MENU

# FOREWORD

This workshop manual has been prepared to provide information regarding repair procedures on Hino Trucks.

Applicable for HINO 238, 258LP, 268, 338, 358 series, equipped with J08E-VB and J08E-WU engine

When making any repairs on your vehicle, be careful not to be injured through improper procedures.
As for maintenance items, refer to the Driver's / Owner's Manual.
All information and specifications in this manual are based upon the latest product information available at the time of printing.
Hino Motors Sales U.S.A., Inc. reserves the right to make changes at any time without prior notice.

Please note that the publications below have also been prepared as relevant workshop manuals for the components and systems in these vehicles.

| Manual Name | Pub. No. |
|---|---|
| Chassis Workshop Manual | S1-UNAE14A 1/2<br>S1-UNAE14A 2/2 |
| J08E-VB, WU Engine Workshop Manual | S5-UJ08E14A |
| Trouble Shooting Workshop Manual | S7-UNAE14A 2/3<br>S7-UNAE14A 3/3 |

**Hino Motors Sales U.S.A. , Inc.**

# CHAPTER REFERENCES REGARDING THIS WORKSHOP MANUAL

Use this chart to the appropriate chapter numbers for servicing your particular vehicle.

| CHAPTER | | | |
|---|---|---|---|
| | MANUAL No. | S7-UNAE14A 1/3 (U.S.A.), S7-CNAE14A 1/3 (CANADA) | |
| | MODELS | HINO 238, 258LP, 268, 338, 358 | |
| | Production Code | NE8J, NF8J, NJ8J, NV8J, NH8J | |
| GENERAL INTRODUCTION | | 1-001 | |
| TROUBLE SHOOTING - COMPONENTS | | 2-001 | |
| TROUBLE SHOOTING - ELECTRICAL CONTROL SYSTEM | | 3-001 | |
| ENGINE CONTROL SYSTEM (J08E) | | 4-001 | |
| DEF SCR SYSTEM (DCU) | | 5-001 | |
| BRAKE CONTROL SYSTEM | | 9-001 (ABS:HYDRAULIC (E VERSION)) | 9-002 (ABS:FULL AIR) |
| VEHICLE CONTROL SYSTEM (VCS) | | 11-001 | |
| CAN COMMUNICATION | | 12-001 | |

This manual does not contain items on half-tone dot meshing.

HINO

# WORKSHOP MANUAL

INDEX: TROUBLE SHOOTING


GENERAL INTRODUCTION

TROUBLE SHOOTING - COMPONENTS

TROUBLE SHOOTING - ELECTRICAL CONTROL SYSTEM

ENGINE CONTROL SYSTEM (J08E)

DEF SCR SYSTEM (DCU)

BRAKE CONTROL SYSTEM

VEHICLE CONTROL SYSTEM (VCS)

CAN COMMUNICATION

# GENERAL INTRODUCTION

1-001

**GENERAL INTRODUCTION.....1-2**
GENERAL PRECAUTIONS .....1-2
IDENTIFICATION INFORMATION .....1-5
HOW TO USE THIS WORKSHOP MANUAL.....1-13
INTRODUCTION TO DESCRIPTIONS.....1-13
PRECAUTIONS .....1-16
SEALANT ON THE TAPERED SCREW FOR PIPING.....1-19
METRIC INFORMATION.....1-20
SPECIFIED TORQUE FOR STANDARD BOLTS AND NUTS .....1-22
SPECIFIED TORQUE FOR FLANGE BOLTS AND NUTS .....1-23
RECOMMENDED LUBRICANTS .....1-24
INFORMATION DISPLAY.....1-26
GLOSSARY.....1-31
GLOSSARY OF SAE AND HINO TERMS .....1-34

# GENERAL INTRODUCTION

## GENERAL PRECAUTIONS

EN01H16ZZZ000A02001001

Some recommended and standard maintenance services for your vehicle are included in this section. When performing maintenance on your vehicle be careful not to get injured by improper work. Improper or incomplete work can cause a malfunction of the vehicle which may result in personal injury and/or property damage. If you have any question about performing maintenance, please consult your Hino dealer.

**WARNING**

When working on your vehicle, observe the following general precautions to prevent death, personal injury and/or property damage in addition to the particular DANGERS, WARNINGS, CAUTIONS and NOTICES in each chapter.

- Always wear safety glasses or goggles to protect your eyes.
- Remove rings, watches, ties, loose hanging jewelry and loose clothing before starting work on the vehicle.
- Bind long hair securely behind the head.
- When working on the vehicle, apply the parking brake firmly, place the gear shift lever in "Neutral" or "N" and block the wheels.
- Always turn off the starter switch to stop the engine, unless the operation requires the engine running. Removing the key from the switch is recommended.
- To avoid serious burns, keep yourself away from hot metal parts such as the engine, exhaust manifold, radiator, muffler, exhaust pipe and tail pipe.
- Do not smoke while working on the vehicle since fuel, and gas from battery are flammable.
- Take utmost care when working on the battery. It contains corrosive sulfuric acid.
- Large electric current flows through the battery cable and starter cable. Be careful not to cause a short which can result in personal injury and/or property damage.
- Read carefully and observe the instructions specified on the jack before using it.
- Use safety stands to support the vehicle whenever you need to work under it. It is dangerous to work under a vehicle supported only by a jack.
- If it is necessary to run the engine after the hood is raised (tilted), make sure that the parking brake is firmly applied, the wheels are blocked, and the gear shift lever is positioned in "Neutral" before staring the engine.
- Run the engine only in a well-ventilated area to avoid inhalation of carbon monoxide.
- Keep yourself, your clothing and your tools away from moving parts such as the cooling fan and V-belts when the engine is running.
- Be careful not to damage lines and hoses by stepping or holding your feet on them.
- Be careful not to leave any tool in the engine compartment. The tool may be hit by moving parts, which can cause personal injury.

## DEFINITION OF SAFETY TERMS

| | |
|---|---|
| ⚠ DANGER | **Indicates an extremely hazardous situation if proper procedures are not followed and could result in death or serious injury.** |
| ⚠ WARNING | **Indicates a potential hazardous situation if proper procedures are not followed and could result in death or serious injury.** |
| ⚠ CAUTION | **Indicates a hazardous situation if proper procedures are not followed and could result in serious injury or damage to parts/equipment.** |
| NOTICE | **Indicates the need to follow proper procedures and to pay attention to precautions so that efficient service is provided.** |
| HINT | **Provides additional information to help you to perform the repair efficiently.** |

## TOWING

- When being towed, always place the gear shift lever in "Neutral" and release the parking brake completely. In order to protect the bumper, fit a protection bar against the lower edge of the bumper and put a wood block under the frame near the No. 1 cross member when attaching the towing chain. Never lift or tow the vehicle if the chain is in direct contact with the bumper.

**1. Towing procedures**

(1) Make sure that the propeller shaft of the vehicle to be towed is removed. When the differential gear or rear axle shaft is defective, remove both right and left rear axle shafts, then cover the hub opening to prevent loss of axle lubricant and entry of dirt or foreign matter.

(2) Use a heavy duty cable or rope when towing the vehicle. Fasten the cable securely to the towing hook on the frame.

(3) The angle of pulling direction of the cable fastened to the towing hook must not exceed 15° in horizontal and vertical directions from the straight ahead, level direction. Avoid using the hook in a way that subjects it to jerk, as in towing a vehicle trapped in a gutter.

(4) Keep the gear shift lever in Neutral.

(5) Make sure that the starter switch is kept in the "ON" position, if the engine is not running.

(6) Make sure that the engine of the towed vehicle is kept running. If the engine is off, no compressed air/ no vacuum will be available for the brake. This is dangerous, as the brake system does not function if the engine is not running.
In addition, the power steering system will not function. The steering wheel, therefore, will become unusually hard to turn, making it impossible to control the vehicle.

(7) Note that the engine brake and exhaust brake cannot be applied, if the propeller shaft is removed.

(8) Make a slow start to minimize shock. Towing speed should be less than 30 km/h {19 mph}.

**2. If the engine of the towed vehicle is defective, make sure that the vehicle is towed only by a tow truck designed for that purpose.**

(1) Front end towing (with front wheels raised off the ground)
When towing from the front end with the front wheels raised off the ground, remove the rear axle shafts to protect the transmission and differential gears from being damaged. The hub openings should be covered to prevent the loss of axle lubricant or the entry of dirt or foreign matter. The above-mentioned precautions should be observed for vehicles equipped with either manual or automatic transmission, and for even short distance towing. After being towed, check and refill the rear axle housing with lubricant if necessary.

(2) Rear end towing
When being towed with the rear wheels raised off the ground, fasten and secure the steering wheel in a straight-ahead position.

## CLEAN AIR ACT

**1. Heavy-duty engine rebuilding practices.**
**§ 86.004-40**

- The provisions of this section are applicable to heavy-duty engines subject to model year 2004 or later standards and are applicable to the process of engine rebuilding (or rebuilding a portion of an engine or engine system). The process of engine rebuilding generally includes disassembly, replacement of multiple parts due to wear, and reassembly, and also may include the removal of the engine from the vehicle and other acts associated with rebuilding an engine. Any deviation from the provisions contained in this section is a prohibited act under section 203(a) (3) of the Clean Air Act (42 U.S.C. 7522(a) (3)).

(1) When rebuilding an engine, portions of an engine, or an engine system, there must be a reasonable technical basis for knowing that the resultant engine is equivalent, from an emissions standpoint, to a certified configuration (i.e., tolerances, calibrations, specifications) and the model year(s) of the resulting engine configuration must be identified. A reasonable basis would exist if:
   a. Parts installed, whether the parts are new, used, or rebuilt, are such that a person familiar with the design and function of motor vehicle engines would reasonably believe that the parts perform the same function with respect to emissions control as the original parts; and
   b. Any parameter adjustment or design element change is made only:
      • In accordance with the original engine manufacturer's instructions; or
      • Where data or other reasonable technical basis exists that such parameter adjustment or design element change, when performed on the engine or similar engines, is not expected to adversely affect in-use emissions.

(2) When an engine is being rebuilt and remains installed or is reinstalled in the same vehicle, it must be rebuilt to a configuration of the same or later model year as the original engine. When an engine is being replaced, the replacement engine must be an engine of (or rebuilt to) a configuration of the same or later model year as the original engine.

(3) At time of rebuild, emissions-related codes or signals from on-board monitoring systems may not be erased or reset without diagnosing and responding appropriately to the diagnostic codes, regardless of whether the systems are installed to satisfy requirements in § 86.004-25 or for other reasons and regardless of form or interface. Diagnostic systems must be free of all such codes when the rebuilt engine is returned to service. Such signals may not be rendered inoperative during the rebuilding process.

(4) When conducting a rebuild without removing the engine from the vehicle, or during the installation of a rebuilt engine, all critical emissions-related components listed in § 86.004-25(2) not otherwise addressed by paragraphs (1) through (3) of this section must be checked and cleaned, adjusted, repaired, or replaced as necessary, following manufacturer recommended practices.

(5) Records shall be kept by parties conducting activities included in paragraphs (1) through (4) of this section. The records shall include at minimum the mileage and/or hours at time of rebuild, a listing of work performed on the engine and emissions-related control components including a listing of parts and components used, engine parameter adjustments, emissions-related codes or signals responded to and reset, and work performed under paragraph (4) of this section.
   a. Parties may keep records in whatever format or system they choose as long as the records are understandable to an EPA enforcement officer or can be otherwise provided to an EPA enforcement officer in an understandable format when requested.
   b. Parties are not required to keep records of information that is not reasonably available through normal business practices including information on activities not conducted by themselves or information that they cannot reasonably access.
   c. Parties may keep records of their rebuilding practices for an engine family rather than on each individual engine rebuilt in cases where those rebuild practices are followed routinely.
   d. Records must be kept for a minimum of two years after the engine is rebuilt.

**2. Maintenance instructions.**
**§ 86.010-38**

(1) For each new diesel-fueled engine subject to the standards prescribed in § 86.007-11, as applicable, the manufacturer shall furnish or cause to be furnished to the ultimate purchaser a statement that
**"This engine must be operated only with ultra low-sulfur diesel fuel (meeting EPA specifications for highway diesel fuel, including a 15 ppm sulfur cap)."**

# IDENTIFICATION INFORMATION

EN01H16ZZZ000A02001002

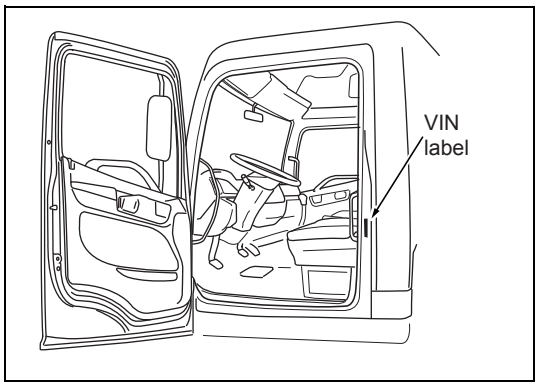


SAPH16ZZZ0000006

## 1. VEHICLE IDENTIFICATION NUMBER

- VEHICLE IDENTIFICATION NUMBER (VIN) is comprised of 17 digits and letters. The VIN label is affixed to the left pillar of the cab.
  These numbers are used for identification purposes when you have a vehicle registered or inspected. Please quote these numbers when ordering spare parts or reporting technical matter to receive prompt service attention.
- The following is an explanation of the items that are listed on the VIN label.

(1) VIN
See VEHICLE IDENTIFICATION NUMBER (VIN) STRUCTURE on the following page.
(2) P.S. (PRODUCTION SERIES) AND VEHICLE COMPONENTS

| MODEL (CLASS) | PRODUCTION CODE | | CLUTCH SIZE | TRANS MISSION SERIES | TRANSMISSION RATIO | | | | | | | REAR AXLE SERIES | SERVICE BRAKE | PARKING BRAKE | SUSPENSION |
|---|---|---|---|---|---|---|---|---|---|---|---|---|---|---|---|
| | MODEL | SERIES | | | 1st | 2nd | 3rd | 4th | 5th | 6th | Rev. | | | | |
| HINO238 (6) | NE8J | EBF | - | 2200HS | 3.10 | 1.81 | 1.41 | 1.00 | 0.71 | 0.61 | 4.49 | RS17-145 | H | D | L or A |
| | | | | | | | | | | | | RS19-145 | | | |
| | | | | 2200RDS | 3.10 | 1.81 | 1.41 | 1.00 | 0.71 | 0.61 | 4.49 | RS17-145 | | | |
| | | | | | | | | | | | | RS19-145 | | | |
| | | HBF | - | 2200HS | 3.10 | 1.81 | 1.41 | 1.00 | 0.71 | 0.61 | 4.49 | RS17-145 | | | |
| | | | | | | | | | | | | RS19-145 | | | |
| | | | | 2200RDS | 3.10 | 1.81 | 1.41 | 1.00 | 0.71 | 0.61 | 4.49 | RS17-145 | | | |
| | | | | | | | | | | | | RS19-145 | | | |
| HINO258 LP*(6) | NE8J | EBF | - | 2200HS | 3.10 | 1.81 | 1.41 | 1.00 | 0.71 | 0.61 | 4.49 | RS17-145 | H | D | L |
| | | | | | | | | | | | | RS19-145 | | | |
| | | | | 2200RDS | 3.10 | 1.81 | 1.41 | 1.00 | 0.71 | 0.61 | 4.49 | RS17-145 | H | D | L or A |
| | | | | | | | | | | | | RS19-145 | | | |
| | | GBF | 350mm | FS5406 | 9.01 | 5.27 | 3.22 | 2.04 | 1.36 | 1.00 | 8.63 | RS17-145 | H | D | L or A |
| | | | | | | | | | | | | RS19-145 | | | |
| | | HBF | - | 2200HS | 3.10 | 1.81 | 1.41 | 1.00 | 0.71 | 0.61 | 4.49 | RS17-145 | | | |
| | | | | | | | | | | | | RS19-145 | | | |
| | | | | 2200RDS | 3.10 | 1.81 | 1.41 | 1.00 | 0.71 | 0.61 | 4.49 | RS17-145 | | | |
| | | | | | | | | | | | | RS19-145 | | | |
| HINO258 LP*(6) | NJ8J | JBF | 350mm | FS5406 | 9.01 | 5.27 | 3.22 | 2.04 | 1.36 | 1.00 | 8.63 | RS17-145 | F | W | A |
| | | | | | | | | | | | | RS19-145 | | | |
| | | KBF | - | 2200HS | 3.10 | 1.81 | 1.41 | 1.00 | 0.71 | 0.61 | 4.49 | RS17-145 | F | W | L or A |
| | | | | | | | | | | | | RS19-145 | | | |
| | | | | 2200RDS | 3.10 | 1.81 | 1.41 | 1.00 | 0.71 | 0.61 | 4.49 | RS17-145 | | | |
| | | | | | | | | | | | | RS19-145 | | | |
| | | | | 2500RDS | 3.51 | 1.90 | 1.44 | 1.00 | 0.74 | 0.64 | 5.09 | RS17-145 | | | |
| | | | | | | | | | | | | RS19-145 | | | |
| | | PBF | - | 2200HS | 3.10 | 1.81 | 1.41 | 1.00 | 0.71 | 0.61 | 4.49 | RS17-145 | | | |
| | | | | | | | | | | | | RS19-145 | | | |
| | | | | 2200RDS | 3.10 | 1.81 | 1.41 | 1.00 | 0.71 | 0.61 | 4.49 | RS17-145 | | | |
| | | | | | | | | | | | | RS19-145 | | | |
| | | | | 2500RDS | 3.51 | 1.90 | 1.44 | 1.00 | 0.74 | 0.64 | 5.09 | RS17-145 | | | |
| | | | | | | | | | | | | RS19-145 | | | |

| MODEL (CLASS) | PRODUCTION CODE | | CLUTCH SIZE | TRANS MISSION SERIES | TRANSMISSION RATIO | | | | | | | REAR AXLE SERIES | SER-VICE BRAKE | PARK-ING BRAKE | SUS-PEN-SION |
|---|---|---|---|---|---|---|---|---|---|---|---|---|---|---|---|
| | MODEL | SERIES | | | 1st | 2nd | 3rd | 4th | 5th | 6th | Rev. | | | | |
| HINO268 (6) | NE8J | EBF | - | 2200HS | 3.10 | 1.81 | 1.41 | 1.00 | 0.71 | 0.61 | 4.49 | RS17-145 | H | D | L |
| | | | | | | | | | | | | RS19-145 | | | |
| | | | | 2200RDS | 3.10 | 1.81 | 1.41 | 1.00 | 0.71 | 0.61 | 4.49 | RS17-145 | H | D | L or A |
| | | | | | | | | | | | | RS19-145 | | | |
| | | | | 2500RDS | 3.51 | 1.90 | 1.44 | 1.00 | 0.74 | 0.64 | 5.09 | RS17-145 | | | |
| | | | | | | | | | | | | RS19-145 | | | |
| | | GBF | 350mm | FS5406 | 9.01 | 5.27 | 3.22 | 2.04 | 1.36 | 1.00 | 8.63 | RS17-145 | | | |
| | | | | | | | | | | | | RS19-145 | | | |
| | | HBF | - | 2200HS | 3.10 | 1.81 | 1.41 | 1.00 | 0.71 | 0.61 | 4.49 | RS17-145 | | | |
| | | | | | | | | | | | | RS19-145 | | | |
| | | | | 2200RDS | 3.10 | 1.81 | 1.41 | 1.00 | 0.71 | 0.61 | 4.49 | RS17-145 | | | |
| | | | | | | | | | | | | RS19-145 | | | |
| | | | | 2500RDS | 3.51 | 1.90 | 1.44 | 1.00 | 0.74 | 0.64 | 5.09 | RS17-145 | | | |
| | | | | | | | | | | | | RS19-145 | | | |

| MODEL (CLASS) | PRODUCTION CODE | | CLUTCH SIZE | TRANS MISSION SERIES | TRANSMISSION RATIO | | | | | | | REAR AXLE SERIES | SER-VICE BRAKE | PARK-ING BRAKE | SUS-PEN-SION |
|---|---|---|---|---|---|---|---|---|---|---|---|---|---|---|---|
| | MODEL | SERIES | | | 1st | 2nd | 3rd | 4th | 5th | 6th | Rev. | | | | |
| HINO268 (6) | NJ8J | JBF | 350mm | FS5406 | 9.01 | 5.27 | 3.22 | 2.04 | 1.36 | 1.00 | 8.63 | RS17-145 | F | W | L or A |
| | | | | | | | | | | | | RS19-145 | | | |
| | | KBF | - | 2200HS | 3.10 | 1.81 | 1.41 | 1.00 | 0.71 | 0.61 | 4.49 | RS17-145 | | | |
| | | | | | | | | | | | | RS19-145 | | | |
| | | | | 2200RDS | 3.10 | 1.81 | 1.41 | 1.00 | 0.71 | 0.61 | 4.49 | RS17-145 | | | |
| | | | | | | | | | | | | RS19-145 | | | |
| | | | | 2500RDS | 3.51 | 1.90 | 1.44 | 1.00 | 0.74 | 0.64 | 5.09 | RS17-145 | | | |
| | | | | | | | | | | | | RS19-145 | | | |
| | | PBF | - | 2200HS | 3.10 | 1.81 | 1.41 | 1.00 | 0.71 | 0.61 | 4.49 | RS17-145 | | | |
| | | | | | | | | | | | | RS19-145 | | | |
| | | | | 2200RDS | 3.10 | 1.81 | 1.41 | 1.00 | 0.71 | 0.61 | 4.49 | RS17-145 | | | |
| | | | | | | | | | | | | RS19-145 | | | |
| | | | | 2500RDS | 3.51 | 1.90 | 1.44 | 1.00 | 0.74 | 0.64 | 5.09 | RS17-145 | | | |
| | | | | | | | | | | | | RS19-145 | | | |
| | NV8J | NBF | 350mm | FS6406 | 9.01 | 5.27 | 3.22 | 2.04 | 1.36 | 1.00 | 8.63 | RS21-145 | F | W | L or A |
| | | | | | | | | | | | | RS23-160 | | | |
| | | PBF | - | 2500RDS | 3.51 | 1.90 | 1.44 | 1.00 | 0.74 | 0.64 | 5.09 | RS21-145 | | | |
| | | | | | | | | | | | | RS23-160 | | | |
| | | | | 3000RDS | 3.49 | 1.86 | 1.41 | 1.00 | 0.75 | 0.65 | 5.03 | RS21-145 | | | |
| | | | | | | | | | | | | RS23-160 | | | |
| | | | | 3500RDS | 4.59 | 2.25 | 1.54 | 1.00 | 0.75 | 0.65 | 5.00 | RS21-145 | | | |
| | | | | | | | | | | | | RS23-160 | | | |
| | | SBF | - | 2500RDS | 3.51 | 1.90 | 1.44 | 1.00 | 0.74 | 0.64 | 5.09 | RS21-145 | | | |
| | | | | | | | | | | | | RS23-160 | | | |
| | | | | 3000RDS | 3.49 | 1.86 | 1.41 | 1.00 | 0.75 | 0.65 | 5.03 | RS21-145 | | | |
| | | | | | | | | | | | | RS23-160 | | | |
| | | | | 3500RDS | 4.59 | 2.25 | 1.54 | 1.00 | 0.75 | 0.65 | 5.00 | RS21-145 | | | |
| | | | | | | | | | | | | RS23-160 | | | |
| | | TBF | 350mm | FS6406 | 9.01 | 5.27 | 3.22 | 2.04 | 1.36 | 1.00 | 8.63 | RS21-145 | | | |
| | | | | | | | | | | | | RS23-160 | | | |

| MODEL (CLASS) | PRODUCTION CODE | | CLUTCH SIZE | TRANS MISSION SERIES | TRANSMISSION RATIO | | | | | | | REAR AXLE SERIES | SER-VICE BRAKE | PARK-ING BRAKE | SUS-PEN-SION |
|---|---|---|---|---|---|---|---|---|---|---|---|---|---|---|---|
| | MODEL | SERIES | | | 1st | 2nd | 3rd | 4th | 5th | 6th | Rev. | | | | |
| HINO338 (7) | NF8J | DBF | 350mm | FS6406 | 9.01 | 5.27 | 3.22 | 2.04 | 1.36 | 1.00 | 8.63 | RS21-145 | H | D | L or A |
| | | EBF | - | 2500RDS | 3.51 | 1.90 | 1.44 | 1.00 | 0.74 | 0.64 | 5.09 | RS21-145 | | | |
| | NV8J | NBF | 350mm | FS6406 | 9.01 | 5.27 | 3.22 | 2.04 | 1.36 | 1.00 | 8.63 | RS21-145 | F | W | L or A |
| | | | | | | | | | | | | RS23-160 | | | |
| | | PBF | - | 2500RDS | 3.51 | 1.90 | 1.44 | 1.00 | 0.74 | 0.64 | 5.09 | RS21-145 | | | |
| | | | | | | | | | | | | RS23-160 | | | |
| | | | | 3000RDS | 3.49 | 1.86 | 1.41 | 1.00 | 0.75 | 0.65 | 5.03 | RS21-145 | | | |
| | | | | | | | | | | | | RS23-160 | | | |
| | | | | 3500RDS | 4.59 | 2.25 | 1.54 | 1.00 | 0.75 | 0.65 | 5.00 | RS21-145 | | | |
| | | | | | | | | | | | | RS23-160 | | | |
| | | SBF | - | 2500RDS | 3.51 | 1.90 | 1.44 | 1.00 | 0.74 | 0.64 | 5.09 | RS21-145 | | | |
| | | | | | | | | | | | | RS23-160 | | | |
| | | | | 3000RDS | 3.49 | 1.86 | 1.41 | 1.00 | 0.75 | 0.65 | 5.03 | RS21-145 | | | |
| | | | | | | | | | | | | RS23-160 | | | |
| | | | | 3500RDS | 4.59 | 2.25 | 1.54 | 1.00 | 0.75 | 0.65 | 5.00 | RS21-145 | | | |
| | | | | | | | | | | | | RS23-160 | | | |
| | | TBF | 350mm | FS6406 | 9.01 | 5.27 | 3.22 | 2.04 | 1.36 | 1.00 | 8.63 | RS21-145 | | | |
| | | | | | | | | | | | | RS23-160 | | | |
| HINO358 (8) | NH8J | SBF | - | 3000RDS | 3.49 | 1.86 | 1.41 | 1.00 | 0.75 | 0.65 | 5.03 | RS23-160 | F | W | L or A |
| | | | | 3500RDS | 4.59 | 2.25 | 1.54 | 1.00 | 0.75 | 0.65 | 5.00 | | | | |
| | | TBF | 350mm | FS6406 | 9.01 | 5.27 | 3.22 | 2.04 | 1.36 | 1.00 | 8.63 | RS23-160 | | | |

| CODE | SERVICE BRAKE | PARKING BRAKE CONTROL CODE | SUSPENSION |
|---|---|---|---|
| | H: Hydraulic<br>F: Full air | D: ACTING ON DIFFERENTIAL<br>W: ACTING ON REAR WHEEL | L: LEAF<br>A: AIR |

LP*: Low profile

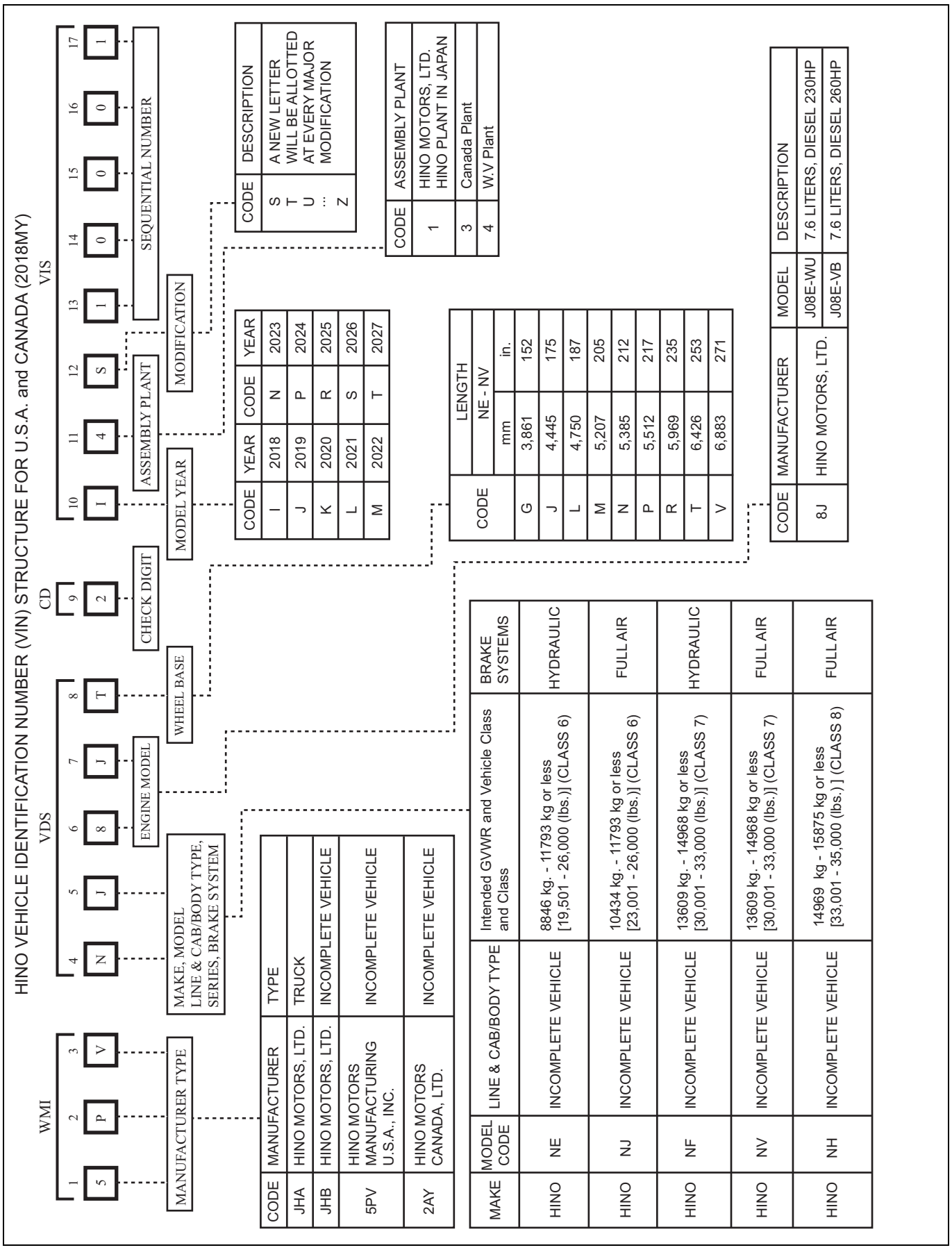


SAPH16ZZZ0000007

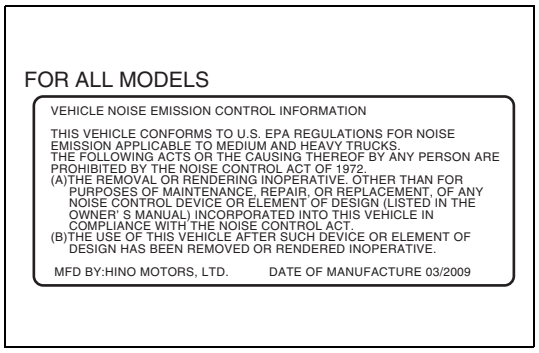


SAPH16ZZZ0000008

## 2. VEHICLE NOISE EMISSION CONTROL INFORMATION

- The Vehicle Noise Emission Control Information is affixed to the side of the left door. The name of manufacturer, production year and month, and noise emission applicable to medium and heavy trucks in conformity with U.S. EPA Regulations are displayed.

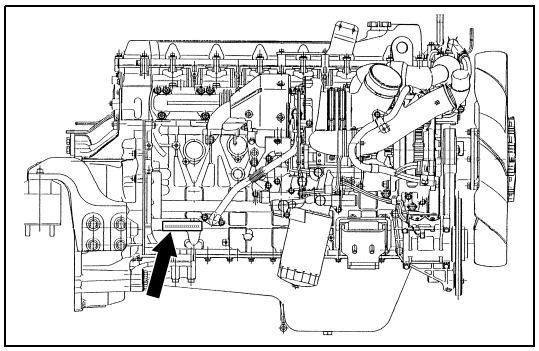

SAPH16ZZZ0000009

## 3. ENGINE SERIAL NUMBERS.

- Please quote these numbers when ordering spare parts or reporting technical matter to receive prompt service attention. The engine serial number is engraved on the engine cylinder block.

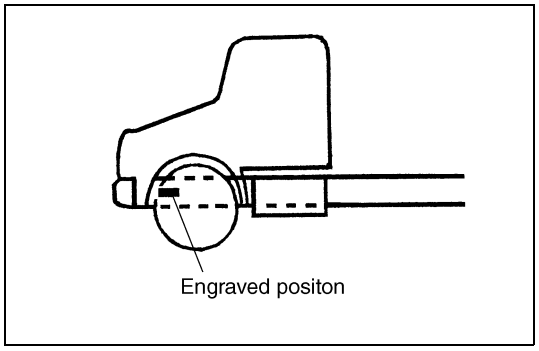


SAPH16ZZZ0000010

## 4. CHASSIS SERIAL NUMBER

- Chassis serial number is engraved on the left side frame near the front wheel.

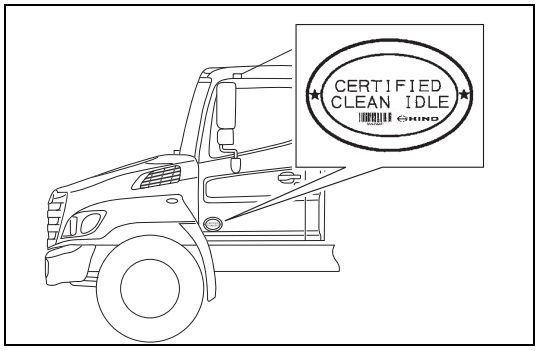


SAPH16ZZZ0000011

## 5. CLEAN IDLE CERTIFIED LABEL FOR U.S.

- Make sure that the following clean engine idling certified label is affixed to the outside of the left door. By the CARB below, the label must be affixed there to prove that the new vehicle with diesel engine manufactured from Jan., 2008 conforms to this low.

**CARB § 1956.8. Exhaust Emission Standard and Test Procedure (a) (b) Heavy-Duty Diesel Engine Idling Requirements**

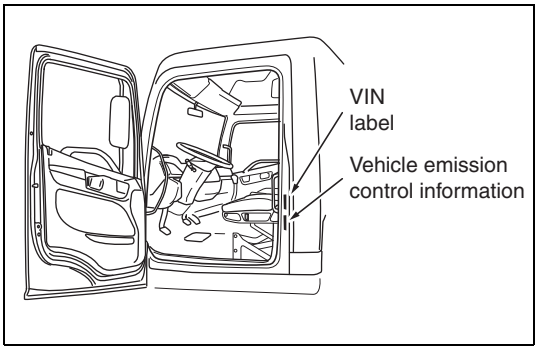


SAPH16ZZZ0000012

For example

VEHICLE EMISSION CONTROL INFORMATION
Hino Motors, Ltd.
VEHICLE FAMILY NAME : FHMX2V0CYBNN
REGULATORY SUB-CATEGORY: VOCATIONAL VEHICLES:19,500<GVWR≤33,000 LBS.
EMISSION CONTROL SYSTEM : LRRA
THIS VEHICLE COMPLIES WITH U.S. EPA REGULATIONS
FOR 2015 MY HEAVY-DUTY VEHICLES.

SAPH16ZZZ0000013

## 6. VEHICLE EMISSION CONTROL INFORMATION

- The Vehicle Emission Control Information is affixed to the side of the left door. The name of manufacturer, production year and month, and emission applicable to medium and heavy trucks in conformity with U.S. EPA Regulations are displayed.

# HOW TO USE THIS WORKSHOP MANUAL

EN01H16ZZZ000A02001003

This workshop manual is designed as a guide for servicing the vehicle.
An INDEX is provided on the first page of each chapter.

# INTRODUCTION TO DESCRIPTIONS

EN01H16ZZZ000A02001004

### 1. TROUBLE SHOOTING FOR EACH TROUBLE SYMPTOM WITH REFERENCE TO THE CHART

2–6 TROUBLE SHOOTING - COMPONENTS

**Difficulty starting engine**

| Symptom | Possible cause | Action |
|---|---|---|
| **Difficulty starting engine (Electrical system)** | Discharged battery | Charge battery |
| | Defective wiring in starter circuit | Repair wiring of starter |
| | Loose or open-circuit battery cable | Tighten battery terminal connections or replace battery cable |
| | Broken glow plug | Replace |
| **Difficulty starting engine (Supply pump)** | Defective supply pump<br>Use of poor fuel | Replace the supply pump<br>Use good quality fuel |
| **Difficulty starting engine (Air cleaner)** | Clogged element | Replace the element |
| **Difficulty starting engine (Fuel system)** | No fuel in tank | Supply fuel |
| | Clogged fuel line | Clean fuel line |
| | Air sucked into fuel system through fuel line connections | Tighten fuel line connections |
| | Clogged fuel filter | Replace element |
| | Loose connection in high-pressure line | Tighten sleeve nut of high-pressure line |
| | Water in fuel | Drain and clean fuel system |
| **Difficulty starting engine (Oil system)** | Oil viscosity too high | Use proper viscosity oil, or install an oil immersion heater and warm up oil |
| **Difficulty starting engine (Other problems)** | Seized piston | Replace piston, piston rings, and liner |
| | Seized bearing | Replace bearing and/or crankshaft |
| | Reduced compression pressure | Overhaul engine |
| | Ring gear damaged or worn | Replace the ring gear and/or starter pinion |
| | Improperly adjusted or broken | Adjust |

SAPH16ZZZ0000014

## 2. INTRODUCTION TO TROUBLE SHOOTING

(1) This document covers the trouble shooting steps 2 and 3 listed below.

| | | |
|---|---|---|
| (1) Hearing | "Step 1" | Identify a fact through adequate hearings on the situation and environment where a trouble has occurred. |
| (2) Prior check<br>(3) Reproducing technique | "Step 2" | Conduct a diagnosis inspection, a symptom check, a functional inspection and a basic inspection to identify a symptom. If a symptom check does not gain enough reproducibility, use a reproducing technique. |
| (4) Trouble shooting for each diagnosis code<br>(5) Trouble shooting for each trouble symptom | "Step 3" | Sort the inspection results obtained from the step 2 and conduct an systematized inspection in accordance with the procedures for trouble shooting for each trouble symptom. |
| (6) Verification test | "Step 4" | Verify that the same trouble will not occur after trouble shooting. If a trouble is not reproducible enough, conduct a verification test under the reproduced conditions and environment. |

(2) Prior check

| | |
|---|---|
| Prior check | • Take the following prior check steps.<br>Diagnosis inspection→diagnosis deletion→trouble symptom verification (use a reproducing technique if not reproducible.)→diagnosis recheck<br>• Prior to a reproduction test, identify a system suspected to have a trouble, attach a tester and other apparatuses and then conduct both a symptom check and an examination on a suspected trouble. For a suspected cause of a trouble symptom, the trouble shooting chart.<br>• Instantaneous occurrence of a trouble symptom will also trigger a failure code. If no troubles are observed, use a reproducing technique in performing each trouble shooting activity.<br>• Trouble symptom verification<br>If not reproducible, take the steps 2, →3 and →4.<br>If not reproducible, use a reproducing technique (e.g. adjust external conditions and inspect each wire harness and connector part). |

### 3. INTRODUCTION TO TROUBLE SHOOTING FOR EACH DIAGNOSIS MONITOR CODE

(1) The "diagnosis code list" and the "trouble shooting for each code" are contained in this document to address each system for which a diagnosis monitor code will be output. If a diagnosis monitor code is already identified, it is possible to immediately proceed with a trouble shooting process based on the code list.



## INSPECTION PROCEDURE P0500 P0501

| 1 | Inspect the combination meter |
|---|---|

1. Drive the vehicle and confirm that the combination meter (speedometer) is working properly.

**Was any failure found?**

**YES**

**Check the combination meter (vehicle speed signal system).**

**NO**

**Go to step 2.**

| 2 | Check the DTC detected (vehicle control ECU) |
|---|---|

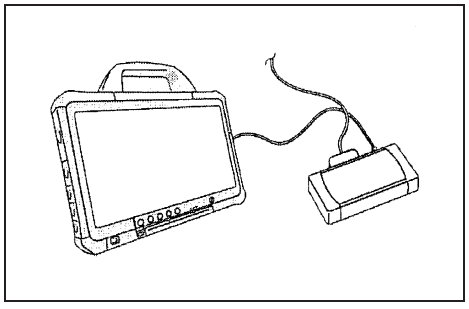

P0500-1-PRO

1. Set the starter switch to the "LOCK" position.
2. Connect the vehicle to HINO DX II.
3. Set the starter switch to the "ON" position.
4. Select [VCS] and check if DTC P0500 or P0501 has been detected in [Fault Information].

**Has DTC P0500 or P0501 been detected?**

**YES**

**Go to step 3.**

**NO**

**Go to step 5.**

SAPH16ZZZ0000015

# PRECAUTIONS

EN01H16ZZZ000A02001005

## PRECAUTIONS FOR ELECTRICAL SYSTEM

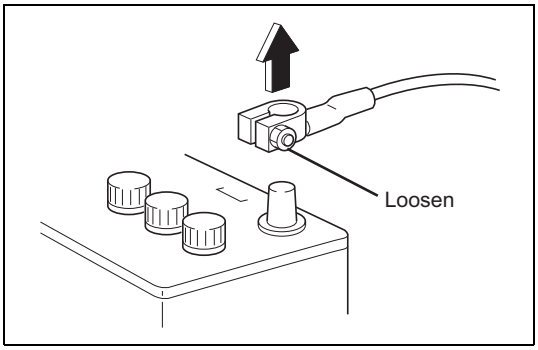


SAPH16ZZZ0000016

### 1. REMOVING THE BATTERY CABLE

**⚠ WARNING**

- **Be sure to wait for at least ten minutes after the starter switch is turned to "LOCK" position before you disconnect the battery terminals from the battery, as the vehicle data is recorded on ECU and DCU starts working for the exhaust gas after treatment after the starter switch is turned to "LOCK" position. Otherwise, the vehicle data will not be recorded on ECU properly and DCU will not complete working properly, which may result in the malfunction of DPR system and DEF-SCR system.**
- **The MIL (malfunction indicator light) may come on when the starter switch is turned to "ON" position again, even if you wait for at least ten minutes before disconnecting the battery terminals from the battery after the starter switch is turned to "LOCK" position. In this case, use HINO DX II to clear the DTC (P204F and P068A), to turn off the MIL and to conduct DPR regeneration manually.**

(1) Before electrical system work, remove the cable from the minus terminal of the battery in order to avoid burning caused by short-circuiting.
(2) To remove the battery cable, fully release the nut to avoid damage to the battery terminal. Never twist the terminal.

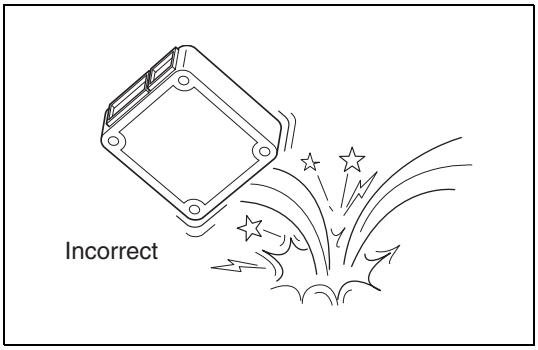


SAPH16ZZZ0000017

### 2. HANDLING OF ELECTRONIC PARTS

(1) Never give an impact to electronic parts of a computer or relay.
(2) Keep electronic parts away from high temperatures and humidity.
(3) Never splash water onto electronic parts in washing the vehicle.
(4) Do not remove the harness connector, electric component box, and cover except for repair and inspection.
If removal is necessary, pay attention that water and foreign matters do not attach or enter to the connector, terminals, electric component box, and cover.
In restoration, make sure there is no attachment or entry of water and foreign matters and mount them properly, because it causes degradation of waterproof function.

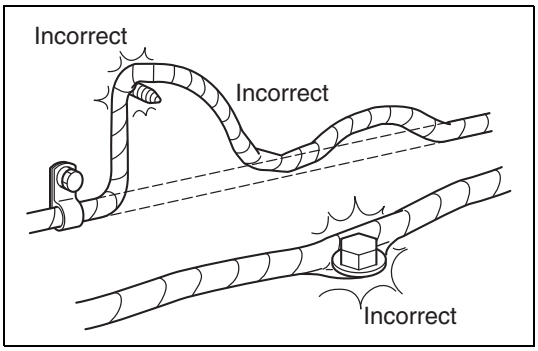


SAPH16ZZZ0000018

### 3. HANDLING OF WIRE HARNESS

(1) Perform marking on a clamp and a clip and secure then in original position so that the wire harness will not interfere with the end and acute angle section of the body and a bolt.
(2) To attach a part, take care not to bite the wire harness.

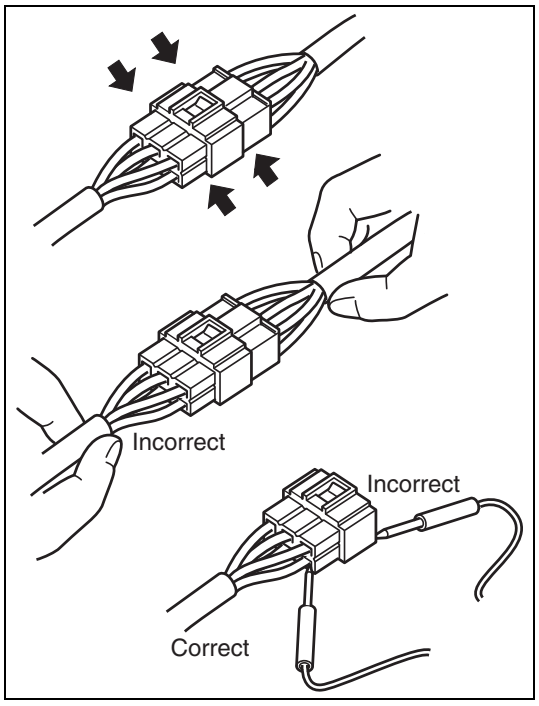


SAPH16ZZZ0000019

**4. HANDLING OF CONNECTOR**

(1) To remove a connector, hold the connector (indicated by an arrow in the figure) to pull it out. Never pull the harness.
(2) To remove a connector with lock, release the lock then pull it out.
(3) To connect a connector with lock, insert it until it clicks.
(4) To insert a test lead into the connector, insert it from behind the connector.
(5) In case it is difficult to insert a test lead from behind the connector, prepare a harness for inspection and perform inspection.
(6) Make sure to check the other connectors before connecting them in to prevent incorrect connections.
(7) Be careful not to allow the connectors to become soiled with dust, water, fuel or oil when performing inspections or removing and replacing parts.

**5. INSTALLATION OF BATTERY DISCONNECT SWITCH**

**⚠ WARNING**

- **Installation of the battery disconnect switch on the power supply circuit for the dosing control unit of DEF-SCR (DCU) may damage or result in the malfunction of DEF-SCR system.**
- **Be sure to read and follow the procedures and instructions on the service bulletin before the installation of the battery disconnect switch.**

**6. HANDLING OF BATTERY DISCONNECT SWITCH**

**⚠ WARNING**

- **Wait for at least one minute before using the battery disconnect switch after the starter switch is turned to "LOCK" position. Otherwise, the vehicle data will not be recorded on ECU properly, which may result in the malfunction of DPR system.**

## PRECAUTIONS FOR ELECTRIC WELDING

**1. PRECAUTION FOR ELECTRIC WELDING**

Electrical components such as the alternator and tachograph are directly connected to the battery and one end is earthed to the chassis frame. Under these conditions, welding current will flow back along the earth circuit if electric welding is carried out and damage may be caused to the alternator, tachograph, electrical components, etc. Consequently, the following precautions are always to be taken during welding.

(1) Disconnect the earth terminal of the battery at the frame fitment and earth the welding equipment securely to the frame itself. (Do not fit the welding equipment earth to such things as the tire rims, brake pipes or fuel pipes and leaf spring, etc.)

a. Turn the starter switch off.
b. Disconnect the negative terminal of the battery.
c. Earth welding equipment securely, near to the area to be welded.
d. Put back battery negative ground as original condition.
e. Finally check the functioning of all instruments.

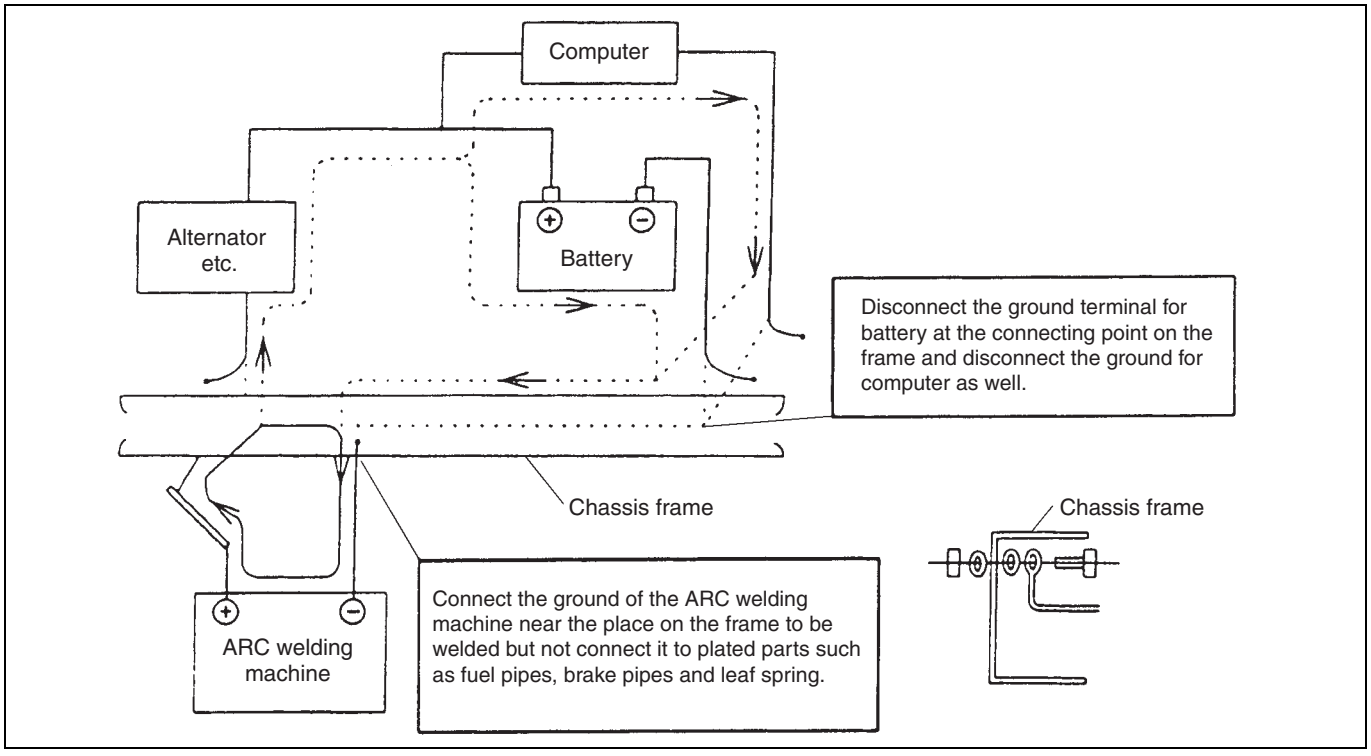


SAPH16ZZZ0000020

(2) In order to prevent damage to ancillary equipment components from sparks during welding, take steps such as putting fire-resistant covers over things like the engine, meters, steering wheel, hoses, tubes, leaf spring and tires.

# SEALANT ON THE TAPERED SCREW FOR PIPING

EN01H16ZZZ000A02001006

To the tapered thread of the air pipe joint is applied the sealant "LOCTITE #575". Follow the procedure below to remove/attach the piping.

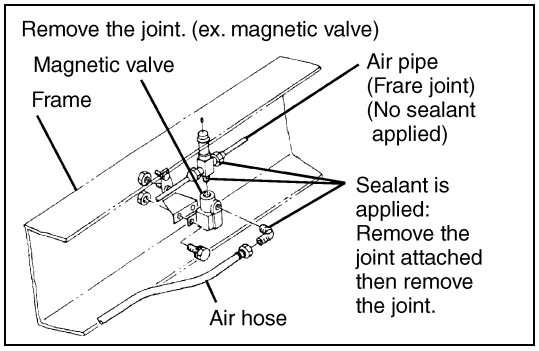


SAPH16ZZZ0000021

## 1. REMOVAL

(1) The sealant (LOCTITE #575) has a high sealing capability. The return torque of taper joint is about 1.5 times as high as the initial tightening torque. To remove the joint, use a longer wrench.

(2) For replacement of joint in a place with poor workability, remove the auxiliaries with the joint attached then remove the joint.

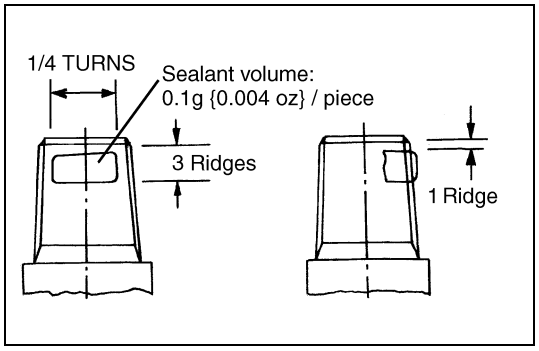


SAPH16ZZZ0000022

## 2. ATTACHING

(1) To apply sealant (LOCTITE #575), use waste and thinner to wipe the dirt off the sealing section, directly apply the sealant by a quarter turn (three ridges) starting from the second ridge from the tip, then assemble in accordance with the tightening torque table below.
Wipe dirt off the mating part (female screw) before tightening it.

**⚠ WARNING**
**In case the sealant has entered your eye or attached to your skin, wash it away in running water.**

**Tightening torque of tapered joint Unit: N·m {kgf·cm, lbf·ft}**

| Screw diameter / Material | 1/8 | 1/4 | 3/8 | 1/2 |
|---|---|---|---|---|
| Steel | 20±5 {200±50, 14.4±3.6} | 49±10 {500±100, 36.2±7.2} | 64±15 {650±150, 47±10} | |
| Aluminum, brass | | 25±5 {250±50, 18.1±3.6} | 34±5 {350±50, 25.3±3.6} | 44±5 {450±50, 32.5±3.6} |

(2) To replace vulcanized tape with sealant, remove the tape before-hand, same as (1).

**NOTICE**
**Take special care not to let dirt and foreign matters enter the piping.**

(3) In the event of air leakage after sealant is applied and piping attached, retightening cannot check the air leakage. Follow the steps (1) and (2) to reassemble the piping.

# METRIC INFORMATION

EN01H16ZZZ000A02001007

## METRIC FASTENERS

1. **Most threaded fasteners on the Hino trucks series are metric. Be careful not to mix them up with threaded fasteners using the inch system. Mismatched or incorrect bolts, nuts and screws can cause damage or malfunction, resulting in personal injury and/or property damage.**

2. **When bolts, nuts and screws are removed from the vehicle, they should be kept for reuse whenever possible. If they are not re-usable, parts that are equivalent to the original parts in dimensions, strength, and thread pitch must be selected.**

3. **Most original bolts are marked with identification numbers indicating the strength of the bolts. The markings are shown below.**

4. **When replacing bolts, be careful to use bolts with the same markings as the original bolts.**

Nomenclature for bolts

Metric system

BOLT M12-1.75 25

D T L

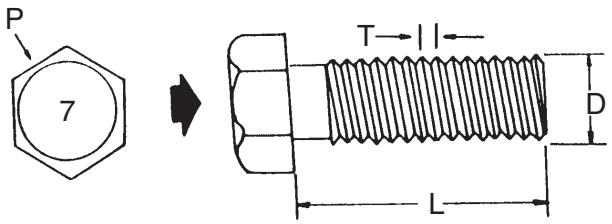


Bolt strength identification

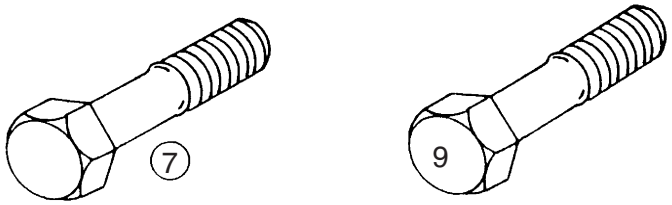


D- Nominal Diameter (millimeters)
L- Length (millimeters)
P- Property Class (bolt strength)
T- Thread Pitch (thread width crest to crest millimeters)

Metric Bolts P Identification class numbers correspond to bolt strength. Increasing numbers represent increasing strength.

SAPH16ZZZ0000023

## DECIMAL AND METRIC EQUIVALENTS

| Fractions | Decimal In. | Metric mm. | Fractions | Decimal In. | Metric mm. |
|---|---|---|---|---|---|
| 1/64 | 0.015625 | 0.397 | 33/64 | 0.515625 | 13.097 |
| 1/32 | 0.03125 | 0.794 | 17/32 | 0.53125 | 13.494 |
| 3/64 | 0.046875 | 1.191 | 35/64 | 0.546875 | 13.891 |
| 1/16 | 0.0625 | 1.588 | 9/16 | 0.5625 | 14.288 |
| 5/64 | 0.078125 | 1.984 | 37/64 | 0.578125 | 14.684 |
| 3/32 | 0.09375 | 2.381 | 19/32 | 0.59375 | 15.081 |
| 7/64 | 0.109375 | 2.778 | 39/64 | 0.609375 | 15.478 |
| 1/8 | 0.125 | 3.175 | 5/8 | 0.625 | 15.875 |
| 9/64 | 0.140625 | 3.572 | 41/64 | 0.640625 | 16.272 |
| 5/32 | 0.15625 | 3.969 | 21/32 | 0.65625 | 16.669 |
| 11/64 | 0.171875 | 4.366 | 43/64 | 0.671875 | 17.066 |
| 3/16 | 0.1875 | 4.763 | 11/16 | 0.6875 | 17.463 |
| 13/64 | 0.203125 | 5.159 | 45/64 | 0.703125 | 17.859 |
| 7/32 | 0.21875 | 5.556 | 23/32 | 0.71875 | 18.256 |
| 15/64 | 0.234375 | 5.953 | 47/64 | 0.734375 | 18.653 |
| 1/4 | 0.250 | 6.35 | 3/4 | 0.750 | 19.05 |
| 17/64 | 0.265625 | 6.747 | 49/64 | 0.765625 | 19.447 |
| 9/32 | 0.28125 | 7.144 | 25/32 | 0.78125 | 19.844 |
| 19/64 | 0.296875 | 7.54 | 51/64 | 0.796875 | 20.241 |
| 5/16 | 0.3125 | 7.938 | 13/16 | 0.8125 | 20.638 |
| 21/64 | 0.328125 | 8.334 | 53/64 | 0.828125 | 21.034 |
| 11/32 | 0.34375 | 8.731 | 27/32 | 0.84375 | 21.431 |
| 23/64 | 0.359375 | 9.128 | 55/64 | 0.859375 | 21.828 |
| 3/8 | 0.375 | 9.525 | 7/8 | 0.875 | 22.225 |
| 25/64 | 0.390625 | 9.922 | 57/64 | 0.890625 | 22.622 |
| 13/32 | 0.40625 | 10.319 | 29/32 | 0.90625 | 23.019 |
| 27/64 | 0.421875 | 10.716 | 59/64 | 0.921875 | 23.416 |
| 7/16 | 0.4375 | 11.113 | 15/16 | 0.9375 | 23.813 |
| 29/64 | 0.453125 | 11.509 | 61/64 | 0.953125 | 24.209 |
| 15/32 | 0.46875 | 11.906 | 31/32 | 0.96875 | 24.606 |
| 31/64 | 0.484375 | 12.303 | 63/64 | 0.984375 | 25.003 |
| 1/2 | 0.500 | 12.7 | 1 | 1.00 | 25.4 |

# SPECIFIED TORQUE FOR STANDARD BOLTS AND NUTS

EN01H16ZZZ000A02001008

**Unit: N·m {kgf·cm, lbf·ft.}**

| Class | 4T | 7T | 9T |
|---|---|---|---|
| Representation / Diameter | 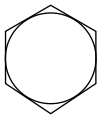 No Mark |    |   |
| M6 | 4.4-6.6 {45-67, 3.3-4.8} | 7.2-10.8 {74-110, 5.4-7.9} | 9.5-13.5 {94-140, 6.8-10.1} |
| M8 | 11.5-16.5 {114-172, 8.3-12.4} | 18.0-26.0 {179-269, 13.0-19.4} | 23.5-34.5 {237-355, 17.2-25.6} |
| M10 | 22.0-32.0 {221-331, 16.0-23.9} | 34.5-51.5 {351-527, 25.4-38.1} | 46.0-68.0 {466-698, 33.7-50.4} |
| M12 | 38.5-57.5 {392-588, 28.4-42.5} | 61.0-91.0 {621-931, 44.9-67.3} | 80.0-120.0 {816-1,224, 59.0-88.5} |
| M14 | 62.0-92.0 {629-943, 45.5-68.1} | 96.0-144.0 {976-1,464, 70.6-105.8} | 128.0-192.0 {1,304-1,956, 94.3-141.4} |
| M16 | 96.0-144.0 {976-1,464, 70.6-105.8} | 152.0-228.0 {1,552-2,328, 112.3-168.3} | 200.0-300.0 {2,040-3,060, 147.5-221.2} |
| M18 | 132.0-198.0 {1,344-2,016, 97.2-145.7} | 208.0-312.0 {2,120-3,180, 153.3-229.9} | 276.0-414.0 {2,816-4,224, 203.6-305.4} |
| M20 | 188.0-282.0 {1,920-2,880, 138.8-208.2} | 296.0-444.0 {3,024-4,536, 218.7-327.9} | 392.0-588.0 {4,000-6,000, 289.3-433.8} |
| M22 | 256.0-384.0 {2,616-3,924, 189.2-283.7} | 405.0-605.0 {4,120-6,180, 297.9-446.8} | 540.0-800.0 {5,470-8,210, 395.5-593.6} |
| M24 | 324.0-486.0 {3,304-4,956, 238.9-358.3} | 515.0-765.0 {5,220-7,840, 377.5-566.8} | 680.0-1,010.0 {6,900-10,340, 499.0-747.6} |

# SPECIFIED TORQUE FOR FLANGE BOLTS AND NUTS

EN01H16ZZZ000A02001009

**Unit: N·m {kgf·cm, lbf·ft.}**

| Class / Diameter | 7T | 9T | 12T | Shape |
|---|---|---|---|---|
| M8 | 18.0-26.0 {184-265, 13.3-19.2} | — | — | 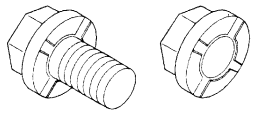 |
| M10 | 41.5-61.5 {421-631, 30.5-45.6} | 55.0-82.0 {560-840, 40.5-60.7} | — | |
| M12 | 73.0-109.0 {744-1,116, 53.8-80.7} | 96.0-114.0 {979-1,469, 70.8-106.2} | — | |
| M14 | — | — | 86.0-142.0 {877-1,448, 63.4-104.7} | 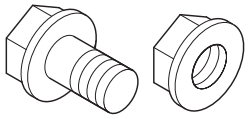 |

# RECOMMENDED LUBRICANTS

EN01H16ZZZ000A02001010

| No. | LUBRICANTS | POSITIONS | VISCOSITY RECOMMENDATIONS (SAE) |
|---|---|---|---|
| 1 | Engine oil<br>A.P.I.: CJ-4<br>JASO: DH-2<br>ACEA: E–6, E-9 | Cylinder Block | 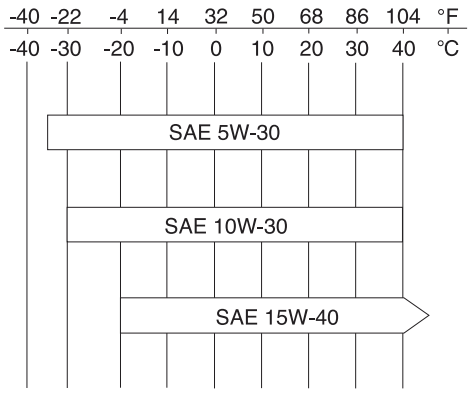 |

| No. | LUBRICANTS | POSITIONS | ATMOSPHERIC TEMP. | S.A.E. No |
|---|---|---|---|---|
| 2 | Heavy duty engine oil MIL-L-2104D, API-CD, or Cat TO-4 | EATON Fuller® FS-5406A,FS-6406A | Above 10°F (–12°C) | 50 |
| | | | Above 10°F (–12°C) | 40 |
| | | | Below 10°F (–12°C) | 30 |
| | Automotive gear oil API-MT-1 | | Above 10°F (–12°C) | 80W-90 |
| | | | Below 10°F (–12°C) | 75W |
| 3 | Mobil Delvac Synthetic Transmission Fluid 50, Shell SPIRAX GSX SAE 50, EATON Roadranger SAE 50, EATON Approved Synthetic Transmission oil, or equivalent (See Eaton Lubrication Manual for detail) | EATON Fuller® FS-5406A, FS-6406A | All | 50 |
| 4 | Automatic transmission fluid; TES 295-approved fluid | Allison® 2200HS, 2200RDS, 2500RDS, 2500HS, 3000RDS, 3500RDS | — | — |
| | Automatic transmission fluid; TES 389-approved fluid | Allison® 2200HS, 2200RDS, 2500RDS, 2500HS, 3000RDS, 3500RDS | | |
| 5 | Axle lubricant Non- Extended Drain Lubricants (Petroleum with EP Additives) (A.P.I. GL-5) (MIL-PRF-2105E and SAE J2360) | Rear axle | Above 10°F (–12°C) | 85W/140 |
| | | | Above –15°F (–26°C) | 80W/140 |
| | | | Above –15°F (–26°C) | 80W/90 |
| | | | Above –40°F (–40°C) | 75W/90 |
| | | | From –40°F (–40°C) to –35°F (2°C) | 75W |
| | | | Above –40°F (–40°C) | 75W/140 |
| | Axle lubricant Extended Drain Lubricants (Petroleum with EP Additives) (A.P.I. GL-5) (MIL-PRF-2105E and SAE J2360) | | Above –15°F (–26°C) | 80W/90 |
| | | | Above –15°F (–26°C) | 80W/90 |
| | | | Above –40°F (–40°C) | 75W/140 |
| | | | Above –40°F (–40°C) | 75W/90 |

| No. | LUBRICANTS | POSITIONS |
|---|---|---|
| 6 | POWER STEERING FLUID (ATF DEXRON® 2 or 3) | Integral Power Steering Gear |
| 7 | BRAKE AND CLUTCH FLUID (DOT-3) or (DOT-4) | Brake & Clutch |
| 8 | WHEEL BEARING GREASE (MIL-G-10924B/18709A) (N.L.G.I.'s No.2 LITHIUM-SOAP) | Propeller Shaft Universal Joint and Slip Joint |
| 9 | HEAT RESISTANCE GREASE (MIL-G-22615/23549/21164) (N.L.G.I.'s No.2 or No.3) | Clutch Disc Hub Spline<br>T/M Main Drive Shaft Spline<br>Q-Plus Brake (Retainer Clip, Anchor Pin, Roller (Journal only), Camshaft, Automatic Slack Adjuster, Clevis Pin) Parking Brake (Camshaft, Anchor Pin, Shoe web) |
| 10 | SPECIAL GREASE (KLUBER GLKO) | B-Frame Disc Brake (Guide buss, Caliper body, Piston) |
| 11 | STARTER GREASE (N.L.G.I.'s No.2 LITHIUM-SOAP) | Bushing, Clutch, Drive Shaft, Pinion Shaft Lever & Reduction Gear |
| 12 | BEARING GREASE (N.L.G.I.'s No.2 LITHIUM-SOAP) | Clutch Release Sleeve<br>Clutch Release Shaft<br>Alternator Bearing<br>Starter Bearing |
| 13 | CHASSIS GREASE (MIL-G-17740) (N.L.G.I.'s No.1 CALCIUM or LITHIUM-SOAP) | Chassis Grease Fitting |
| 14 | LONG LIFE COOLANT | Engine, Radiator |
| 15 | Mobil Synthetic 75W-90 | Front Wheel Hub (Oil Lubricated Bearings) |

| No. | LUBRICANTS | POSITIONS | SHEEL | MOBIL | EXXON |
|---|---|---|---|---|---|
| 16 | LITHIUM BASE DISULFIDE MOLYBDENUM GREASE | Drag Link & Tie Rod Ball Joint | Retinax AM | Mobil Grease Special | Beacon Q2 |

# INFORMATION DISPLAY

EN01H16ZZZ000A02001011

## 1. INFORMATION DISPLAY ITEMS

- Information display shows following items.

(1) Ordinary display
Trip meter, voltage, date, fuel consumption, average speed and engine or vehicle maintenance information etc.

(2) Warning display
The warning display is automatically displayed and shows messages.

**NOTICE**

- **When turn the starter switch to "ON" position, display shows last message. But in case of device operating, the warning display is prior to ordinary display.**

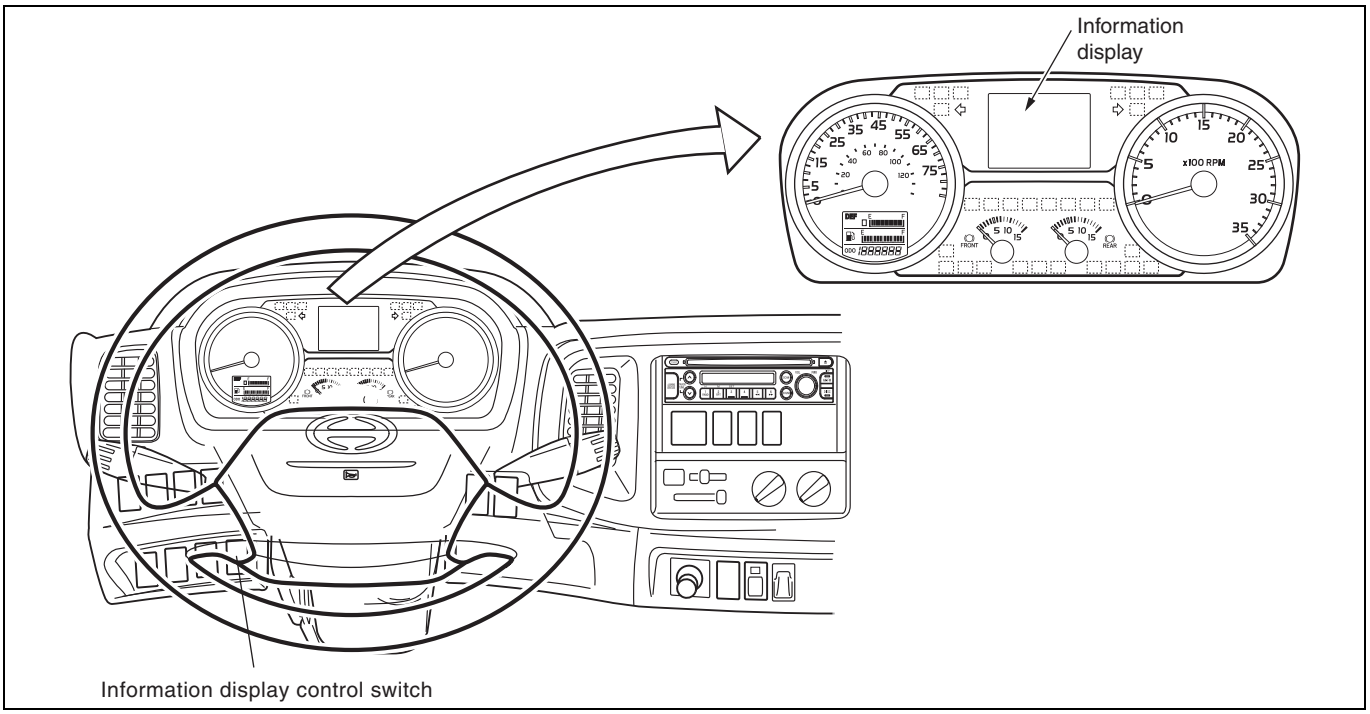


SAPH16ZZZ0000030

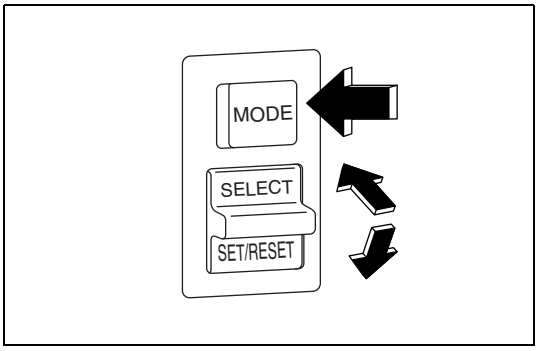


SAPH16ZZZ0000031

## 2. INFORMATION DISPLAY CONTROL SWITCH

(1) The following information is shown with the starter switch turned on. Each time you push the "MODE" button, the displayed information is changed.

**NOTICE**

- **Diagram on the next page shows the operation method of the information display.**
- **If you push and hold "SET/RESET" button, as the display case, data may be reset.**
- **Press the "MODE" button more than 1 second to release the warning information.**

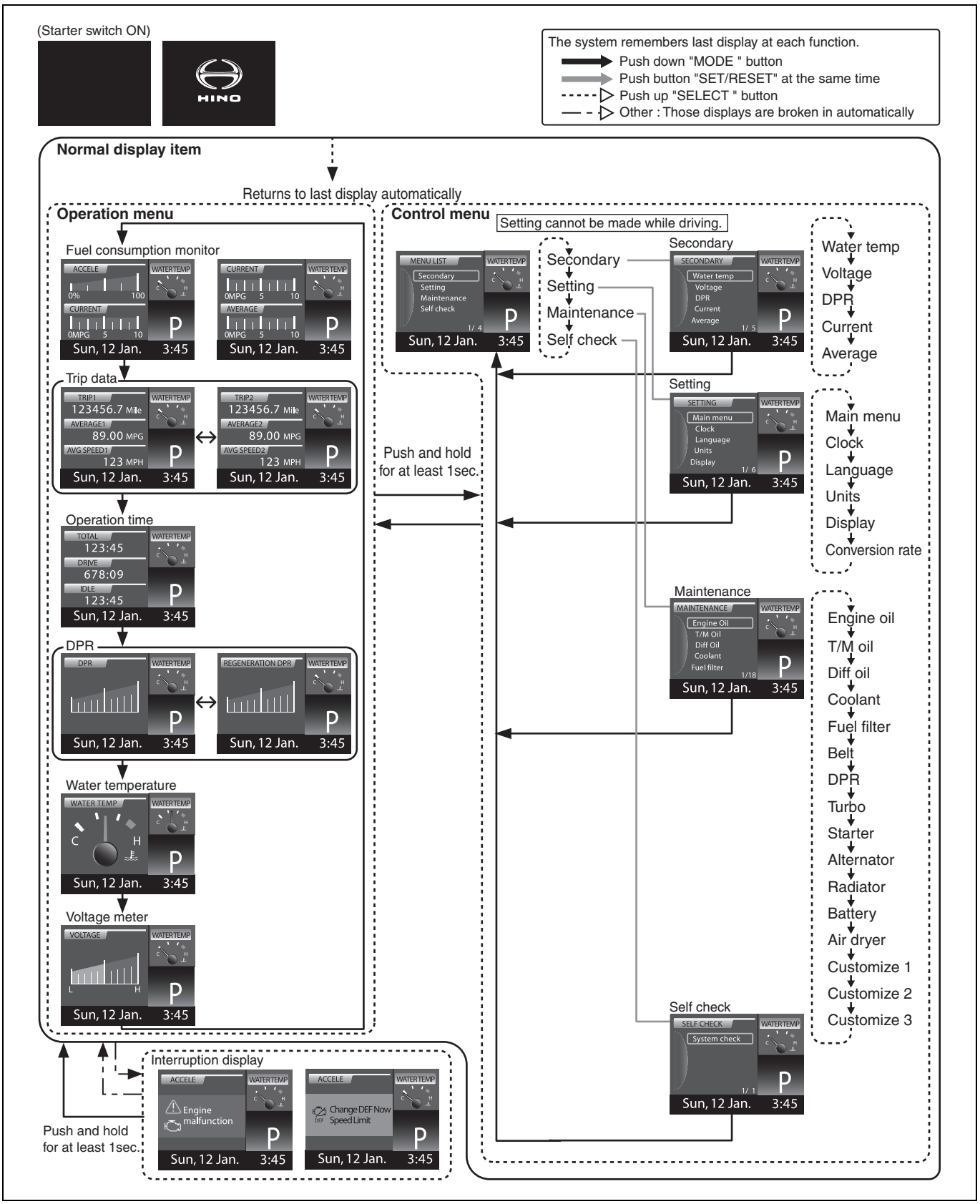


SAPH16ZZZ0000032

**3. WARNING DISPLAY**

(1) Warning display

| Display | Warning Display remarks |
|---|---|
|  | Engine control system has malfunction. This is important and must be addressed immediately. |
| 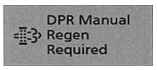 | DPR cleaner needs to be manually regenerated. |

**NOTICE**

- **The display shows DPR MANUAL REGEN REQUIRED with the buzzer sound when DPR cleaner needs to be manually regenerated.**

(2) Information display

| Display | Display remarks |
|---|---|
|  | Appears when idling is stopped due to emergency. |
| 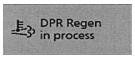 | DPR regenerate on time. |
| 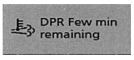 | DPR remaining for few minute. |
|  | DPR regenerate completed. |
| 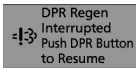 | DPR regeneration interrupted, push DPR button to resume. |

**NOTICE**

- **The DPR system automatically regenerates when the quantity of soot collected in the DPR cleaner exceeds a specific quantity. This prevents an abnormal accumulation of soot and keeps the DPR cleaner in good condition. Use of high-performance catalyst and an electronically controlled common rail fuel injection system has made it possible to burn (regenerate) the soot while driving.**

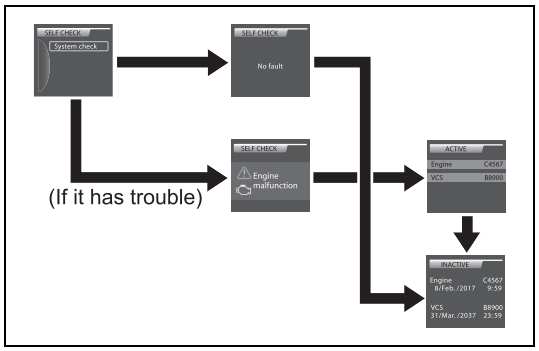


SAPH16ZZZ0000040

## 4. SELF DIAGNOSIS SYSTEM

If the vehicle has fault, display shows the trouble.

(1) Select to "Self check" and push "SET/RESET" button.

(2) Select to "System check" and push "SET/RESET" button, display shows "No fault" in case of no trouble. If it has trouble, display shows fault item.

(3) If display shows trouble warning, Immediately get the vehicle checked and repaired at an authorized Hino dealer.

(4) In case of "Engine malfunction" displayed, push and hold "SELECT" button for more than 1 sec. until the display shows trouble code.
Push "SELECT" button, display shows another trouble codes, if there are.

(5) Push and hold "SELECT" button for longer than 1 sec. to display the "Inactive".

(6) Trouble code display

| Initial Display | Remarks |
|---|---|
|  | It has no trouble. |
|  | It has trouble. |
| 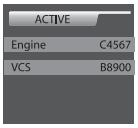 | Yellow background.<br>It has trouble code, now.<br>Get the vehicle checked and repaired. |
| 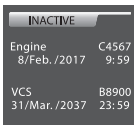 | It had trouble code, previously. |

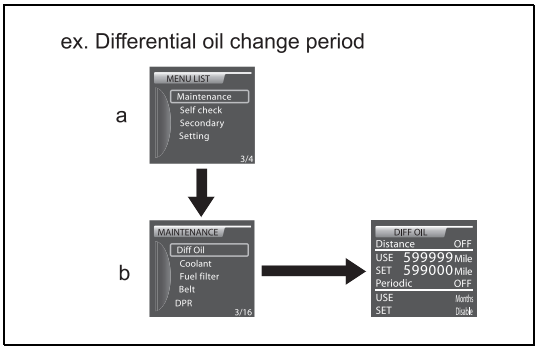


SAPH16ZZZ0000045

**5. RESETTING PROCEDURE**

ex. Differential oil change period

(1) Scroll up and select "Maintenance" and push "SET/RESET" button.

(2) Scroll up and select the preferred setting item and push "SET/RESET" button.

(3) Push and hold "SET/RESET" button for longer than 1 sec.

**NOTICE**

- **In the case of the other item on trouble code, data may be reset as the same procedure.**
- **But, especially in the case of "DPR", push and hold "MODE" and "SET/RESET" button at the same time for more than 20sec. to reset. (Following to the low, use only at an authorized Hino dealer.)**

**6. AVAILABLE SETTING ITEMS**

- Engine oil
- T/M oil
- Diff oil
- Coolant
- Fuel filter
- Belt
- DPR
- Turbo
- Starter
- Alternator
- Radiator
- Battery
- Air dryer
- Customize1
- Customize2
- Customize3

# GLOSSARY

EN01H16ZZZ000A02001012

## DEFINITION OF ABBREVIATION IN THIS MANUAL

### LIST OF ABBREVIATION

| SAE ABBREVIATIONS | SAE TERMS |
|---|---|
| A/C | Air conditioner |
| ABS | Anti-lock Brake System |
| ACC | Accessory |
| AMT | Automated Manual Type |
| ATC | After Turbo catalyst |
| ATF | Automatic Transmission Fluid |
| CA | Crank Angle |
| CAN | Controller Area Network |
| CD-ROM | Compact Disc Read Only Memory |
| CPU | Central Processing Unit |
| dB | Decibel |
| DC | Direct Current |
| D-CAT | Diesel-Clean Advanced Technology System |
| DC motor | Direct Current Motor |
| DCU | Dosing Control Unit |
| DEF | Diesel Exhaust Fluid |
| DPR | Diesel Particulate active Reduction System |
| DSS | Driving Support System |
| ECU | Electronic Control Unit |
| EEPROM | Electronically Erasable and Programmable Read Only Memory |
| EGR | Exhaust Gas Recirculation |
| ELR | Emergency Locking Retractor |
| ENG | Engine |
| ES START | Easy and Smooth start system |
| F/A | Front axle |
| FCCB | Fuel Control Cylinder Balance |
| FCV | Fuel Cutoff Valve |
| FF Shift | Feather touch & Finger shift |
| FL | Fusible link |
| Fr | Front |
| FRP | Fiber Reinforces Plastic |
| FUP | Front Underrun Protector |

| SAE ABBREVIATIONS | SAE TERMS |
|---|---|
| GND | Ground |
| GVW | Gross Vehicle Weight |
| Hi | High |
| HINO DX II | Hino Diagnostic eXplorer II |
| HVAC | Heating, Ventilating and Air-Conditioning unit |
| I.S.C. | Idle Speed Control |
| IC | Integrated Circuits |
| ID | Identification |
| IPD | Intelligent Power Device |
| ISO | International Organization for Standardization |
| JIS | Japanese Industrial Standards |
| LED | Light Emitting Diode |
| LEV | Low Emission Vehicle |
| LH | Left Hand |
| LLC | Long Life Coolant |
| Lo | Low |
| MAX | Maximum |
| MIN | Minimum |
| MS evaporator | Multitank and Super slim structure evaporator |
| No | Number |
| NOx | Nitrogen Oxide |
| NMR | No load Maximum Revolution |
| OHC | Over Head Camshaft |
| PC | Personal Computer |
| PCD | Pitch Circle Diameter |
| PCS | Pre-Crash Safety |
| PCV | Pump Control Valve |
| PCV valve | Positive Crankcase Ventilation valve |
| PM | Particulate Matter |
| PPG | Glass-fiber-reinforced Polypropylene |
| PPm | Parts Per Million |
| PS pump | Power Steering Pump |
| PVD | Physical Vapor Deposit |
| PWR | Power |
| QE code | Quick Response Code |

| SAE ABBREVIATIONS | SAE TERMS |
|---|---|
| R/A | Rear axle |
| RH | Right Hand |
| SCR | Selective Catalytic Reduction |
| SW | Switch |
| T/M | Transmission |

# GLOSSARY OF SAE AND HINO TERMS

EN01H16ZZZ000A02001013

This glossary lists all SAE-J2403 terms and abbreviations used in this manual in compliance with SAE recommendation, as well as their HINO equivalents.

| SAE ABBREVIATIONS | SAE TERMS | HINO TERMS ( )--ABBREVIATIONS |
|---|---|---|
| AAT | AMBIENT AIR TEMPERATURE | Ambient Air Temperature |
| ACL | AIR CLEANER | Air cleaner |
| ACL Element | ACL (Air Cleaner) Element | Air Cleaner element |
| ACL Element | AIR CLEANER Element | Air Cleaner element |
| ACL Housing | AIR CLEANER Housing | Air cleaner body assembly |
| ACL Housing Cover | AIR CLEANER Housing Cover | Air Cleaner Housing Cover |
| AFTDEF | AFTERTREATMENT DIESEL EXHAUST FLUID | DEF |
| AFTDEFDU | AFTERTREATMENT DIESEL EXHAUST FLUID DOSING UNIT | DCU |
| AFTDOC | AFTERTREATMENT DIESEL OXIDATION CATALYST | DOC (Diesel Oxidation Catalyst) |
| AFTDOS | AFTERTREATMENT DOSER AFTDOS | Dosing |
| AFTDPF | AFTERTREATMENT DIESEL PARTICU-LATE FILTER | DPR filter |
| AFTDPFDP | Aftertreatment Diesel Particulate Filter Differential Pressure | DPR differential pressure |
| AFTEGT | AFTERTREATMENT EXHAUST GAS TEM-PERATURE | Exhaust gas temperature |
| AP | ACCELERATOR PEDAL | Accelerator pedal |
| AP Sensor | ACCELERATOR PEDAL Sensor | Accelerator Pedal Position Sensor |
| APP | ACCELERATOR PEDAL POSITION | Accelerator Pedal Position |
| CAC | CHARGE AIR COOLER | Intercooler |
| CPP Switch | CLUTCH PEDAL POSITION Switch | Clutch Switch |
| DCC | DIAGNOSTIC CONNECTOR, Cab | Diagnosis connector |
| DCU | DIAGNOSTIC CONNECTOR, Underhood | Diagnosis connector |
| DRIVER | DRIVER | Driver |
| DTC | DIAGNOSTIC TROUBLE CODE | Diagnosis Trouble Code |
| DTM Switch | DIAGNOSTIC TEST MODE Switch | Diagnosis switch |
| EBP | EXHAUST BACK PRESSURE | Back pressure |
| EBP | EXHAUST BACK PRESSURE | Exhaust back pressure |
| EBP Sensor | EXHAUST BACK PRESSURE Sensor | Back Pressure Sensor |
| EBPR Valve | EXHAUST BACK PRESSURE REGULATOR Valve | Exhaust control valve |
| EC | ENGINE CONTROL | Engine control |

| SAE ABBREVIATIONS | SAE TERMS | HINO TERMS ( )--ABBREVIATIONS |
|---|---|---|
| ECT | ENGINE COOLANT TEMPERATURE | Coolant Temperature |
| ECT | ENGINE COOLANT TEMPERATURE | Water Temperature |
| EFT | ENGINE FUEL TEMPERATURE | Fuel temperature |
| EFT Sensor | ENGINE FUEL TEMPERATURE Sensor | Fuel temperature sensor |
| EGR | EXHAUST GAS RECIRCULATION | EGR |
| EGR Valve | EXHAUST GAS RECIRCULATION Valve | EGR valve |
| EGRT | EXHAUST GAS RECIRCULATION TEMPERATURE | EGR temperature |
| EGRT Sensor | EXHAUST GAS RECIRCULATION TEMPERATURE Sensor | EGR exit temperature sensor |
| EGT | EXHAUST GAS TEMPERATURE | Exhaust gas temperature |
| EI | ELECTRONIC IGNITION | Ignition coil |
| EOP | ENGINE OIL PRESSURE | Oil Pressure |
| EOT | ENGINE OIL TEMPERATURE | Oil Temperature |
| FP | FUEL PUMP | Fuel pump |
| FUEL PRESSURE Sensor | FUEL PRESSURE Sensor | Fuel Pressure sensor |
| GLOW PLUG | GLOW PLUG | Glow plug |
| GND | GROUND | GROUND |
| IA | INTAKE AIR | Air Intake |
| IA System | INTAKE AIR System | Air Intake System |
| IAT | INTAKE AIR TEMPERATURE | Intake temperature |
| IAT Sensor | INTAKE AIR TEMPERATURE Sensor | Intake temperature sensor |
| IDLE | IDLE | idle |
| IMAT | INTAKE MANIFOLD AIR TEMPERATURE | Intake manifold Air temperature sensor |
| IMAT | INTAKE MANIFOLD TEMPERATURE | Intake manifold temperature sensor |
| INJ | INJECTOR | Injector |
| MAF Sensor | MASS AIR FLOW Sensor | Air flow sensor |
| MIL | MALFUNCTION INDICATOR LAMP | MIL (Malfunction Indicator Light) |
| OSS Sensor | OUTPUT SHAFT SPEED Sensor | Output Speed Sensor |
| OSS Sensor | OUTPUT SHAFT SPEED Sensor | Speed Sensor |
| PC Solenoid Valve | PRESSURE CONTROL Solenoid Valve | Solenoid control valves |
| PCV | POS CRANKCASE VENTILATION | PCV (Positive Crankcase Vent) |
| PCV Valve | POS CRANKCASE VENTILATION Valve | PCV (Positive Crankcase Vent) Valve |
| PCV Valve | POS CRANKCASE VENTILATION Valve | PCV Valve |
| PCV Valve | POSITIVE CRANKCASE VENT Valve | PCV Valve |

| SAE ABBREVIATIONS | SAE TERMS | HINO TERMS ( )--ABBREVIATIONS |
|---|---|---|
| PNP | PARK/NEUTRAL POSITION | Neutral position |
| PNP Switch | PARK/NEUTRAL POSITION Switch | Neutral switch |
| RFP | RAIL FUEL PRESSURE | Common rail Pressure |
| RFP Sensor | RAIL FUEL PRESSURE Sensor | Common rail pressure sensor |
| SPARK PLUG | SPARK PLUG | Spark plug |
| SRI | SERVICE REMINDER INDICATOR | Check engine |
| ST | SCAN TOOL | Diagnostic tool |
| TC | TURBOCHARGER | Turbocharger |
| TCC | TORQUE CONVERTER CLUTCH | Torque Converter |
| TP Sensor | THROTTLE POSITION Sensor | Throttle Sensor |
| TSS Sensor | TURBINE SHAFT SPEED Sensor | Turbine Speed Sensor |
| VAF Sensor | VOLUME AIR FLOW Sensor | Air flow sensor |
| VLS | VEHICLE LIMITING SPEED | Speed Limiter Upper Limit |
| VSS | VEHICLE SPEED SENSOR | Vehicle Speed sensor |

# TROUBLE SHOOTING - COMPONENTS

2-001

**ENGINE BASIC ..... 2-2**
ENGINE ASSEMBLY ..... 2-2
ENGINE ASSEMBLY (COMMON RAIL SYSTEM) ..... 2-9

**TURBOCHARGER (J08E) ..... 2-10**
TURBOCHARGER ..... 2-10

**ALTERNATOR (J08E: REMY 12V-130A, 135A, 180A, 200A) ..... 2-19**
ALTERNATOR ..... 2-19

**STARTER (J08E) ..... 2-20**
STARTER ..... 2-20

**AIR COMPRESSOR (J08E: 340 $cm^3$) ..... 2-21**
AIR COMPRESSOR ..... 2-21

**CLUTCH MAIN UNIT ..... 2-22**
CLUTCH ASSEMBLY (EATON SAS1402) ..... 2-22

**AUTOMATIC TRANSMISSION ..... 2-24**
AUTOMATIC TRANSMISSION ASSEMBLY ..... 2-24

**TRANSMISSION/TRANSFER CONTROL (EATON MANUAL TRANSMISSION) ..... 2-25**
TRANSMISSION CONTROL UNIT ..... 2-25

**TRANSMISSION/TRANSFER CONTROL (ALLISON AUTOMATIC TRANSMISSION) ..... 2-26**
TRANSMISSION CONTROL UNIT ..... 2-26

**PROPELLER SHAFT (SPL 100, 140) ..... 2-26**
PROPELLER SHAFT ASSEMBLY ..... 2-26

**DIFFERENTIAL CARRIER (MERITOR RS-17, 19, 21 AND 23) ..... 2-27**
DIFFERENTIAL CARRIER ASSEMBLY ..... 2-27

**BRAKE EQUIPMENT (MODELS WITH HYDRAULIC BRAKE) ..... 2-28**
SERVICE BRAKE ASSEMBLY ..... 2-28

**BRAKE EQUIPMENT (MODELS WITH FULL AIR BRAKE) ..... 2-33**
SERVICE BRAKE ASSEMBLY ..... 2-33

**SERVICE BRAKE (HYDRAULIC BRAKE) ..... 2-35**
WHEEL BRAKE (TYPE: 4 PISTON) ..... 2-35

**SERVICE BRAKE (FULL AIR BRAKE) ..... 2-37**
AIR DRYER AND RESERVOIR SYSTEM (MODEL: BENDIX AD-IS) ..... 2-37

**EXHAUST BRAKE ..... 2-40**
EXHAUST BRAKE SYSTEM ..... 2-40

**PARKING BRAKE (BOSCH 12) ..... 2-41**
PARKING BRAKE ASSEMBLY ..... 2-41

**STEERING EQUIPMENT ..... 2-42**
STEERING SYSTEM ..... 2-42

**FRONT AXLE (MFS) ..... 2-46**
FRONT AXLE (MFS) ..... 2-46

**REAR AXLE ..... 2-48**
REAR AXLE ..... 2-48

**WHEEL AND TIRE ..... 2-49**
WHEEL AND TIRE ..... 2-49

**SUSPENSION ..... 2-51**
LEAF SUSPENSION ASSEMBLY ..... 2-51
AIR SUSPENSION ASSEMBLY ..... 2-51

**CHASSIS FRAME ..... 2-52**
CHASSIS FRAME ..... 2-52

**CAB ..... 2-53**
AIR SUSPENSION DUMP SYSTEM ..... 2-53
CAB ASSEMBLY ..... 2-53
AIR CONDITIONING SYSTEM ..... 2-55

**ELECTRICAL EQUIPMENT ..... 2-65**
ELECTRICAL PARTS ..... 2-65

# ENGINE BASIC

## ENGINE ASSEMBLY

EN01H16ZZZ010F01001001

### Engine overheating

| Symptom | Possible cause | Action |
|---|---|---|
| **Engine overheating (Coolant)** | Insufficient coolant | Add coolant |
| | Defective thermostat | Replace thermostat |
| | Overflow of coolant due to leakage of exhaust into cooling system | Repair |
| | Damaged rubber hose | Replace rubber hose |
| | Coolant leakage due to deteriorated rubber hose | Replace rubber hose |
| | Coolant leakage from coolant pump | Replace the coolant pump |
| | Coolant leakage from rubber hose connection | Retighten or replace clamp |
| | Coolant leakage from cylinder head gasket | Replace gasket |
| **Engine overheating (Coolant pump)** | Bearing seizure | Replace |
| | Damaged (corroded) vane | Replace vane |
| **Engine overheating (Radiator)** | Clogged with rust or scale | Clean radiator |
| | Clogged with iron oxide due to leakage of exhaust into cooling system | Clean coolant passage and correct exhaust leakage |
| | Coolant leakage | Repair or replace radiator |
| | Damaged cooling fan | Replace cooling fan |
| | Clogged radiator core due to mud or other debris | Clean radiator |
| | Defective radiator cap pressure valve | Replace radiator cap |
| **Engine overheating (Abnormal combustion)** | Poor fuel | Use good quality fuel |
| | Breakdown of injector | Replace the injector |
| **Engine overheating (Other problems)** | Defective or deteriorated engine oil | Change engine oil |
| | Unsatisfactory operation of oil pump | Replace or repair |
| | Insufficient oil | Add oil |
| | Brake drag | Repair or adjust |
| | Break water temperature sensor | Replace it |
| **Engine overheating (Severe operating condition)** | Lugging the engine | Operate engine properly |

## Excessive oil consumption

| Symptom | Possible cause | Action |
|---|---|---|
| **Excessive oil consumption (Pistons, cylinder liners, and piston rings)** | Wear of piston ring and cylinder liner | Replace piston rings and cylinder liner |
| | Worn, sticking or broken piston rings | Replace piston rings and cylinder liner |
| | Insufficient tension on piston rings | Replace piston rings and cylinder liner |
| | Unsatisfactory breaking in of piston rings | Replace piston rings and cylinder liner |
| | Unsuitable oil (viscosity too low) | Change oil as required and replace piston rings and cylinder liners |
| | Incorrectly fitted piston rings (upside down) | Replace piston rings |
| | Gaps of piston rings in cell with each other | Reassemble piston rings |
| **Excessive oil consumption (Valve and valve guides)** | Worn valve stem | Replace valve and valve guide |
| | Worn valve guide | Replace valve guide |
| | Incorrectly fitted valve stem seal | Replace the stem seal |
| | Excessive lubricant on rocker arm | Check clearance of rocker arm and shaft |
| **Excessive oil consumption (Excess oil feed)** | Defective oil level gauge | Replace oil level gauge |
| | Oil level too high | Drain excess oil |
| **Excessive oil consumption (Oil leakage from miscellaneous parts)** | Oil leakage from oil seal | Replace oil seal |
| | Cracks or blowhole in cylinder block | Replace cylinder block |
| | Oil leakage from connections of oil lines | Tighten connections of oil lines |
| | Oil leakage from oil cooler | Replace oil cooler |
| | Oil leakage from oil pan gasket | Replace oil pan gasket |
| | Oil leakage from O-ring | Replace O-ring |
| **Excessive oil consumption (Other problems)** | Overcooled engine (low temperature wear) | Warm up engine before moving vehicle. Check cooling system. |

**NOTICE**

**If oil consumption is excessive, the problems above will occur. Complaints from the customer are often related to such problems.**

**1. White smoke is emitted continuously when the engine is run at high speed.**

**2. White smoke is emitted only immediately after the engine speed is abruptly raised when idling.**

**3. The tail pipe is blackened with oil.**

**4. Oil leaks from the flanges of the exhaust manifold.**

**5. Lack of power.**

## Piston seizure

| Symptom | Possible cause | Action |
|---|---|---|
| **Piston seizure (Pistons, cylinder liners and piston rings)** | Incorrect clearance between piston and cylinder liner | Replace piston, piston rings and cylinder liner |
| | Unsatisfactory installation of piston pin | Replace piston, piston rings, cylinder liner and piston pin as required |
| | Broken piston ring | Replace piston, piston rings and cylinder liner |
| | Difference in expansion due to use of wrong piston | Replace piston, piston rings and cylinder liner |
| **Piston seizure (Coolant)** | Reduction in capacity of coolant pump (due to vane corrosion) | Replace the coolant pump |
| | Leakage of coolant | Repair |
| | Insufficient coolant | Add coolant |
| | Dirty coolant | Clean and replace coolant |
| | Defective radiator (coolant leakage, clogging) | Repair or replace the radiator |
| | Defective rubber hose (leakage) | Replace rubber hose |
| | Defective thermostat | Replace the thermostat |
| | Leakage of exhaust into cooling system | Repair |
| **Piston seizure (Operation)** | Abrupt stoppage of engine after running at high speed | Operate engine properly |
| | Hill climbing using unsuitable gear | Select suitable gear |
| **Piston seizure (Oil)** | Insufficient oil | Add oil |
| | Dirty oil | Change oil |
| | Poor quality oil | Replace with proper engine oil |
| | High oil temperature | Repair |
| | Low oil pressure | Repair |
| | Defective oil pump | Repair oil pump |
| | Reduced performance due to worn oil pump | Replace oil pump |
| | Suction strainer sucking air | Add oil and/or repair strainer |
| **Piston seizure (Abnormal combustion)** | Use of defective fuel | Change fuel |
| | Engine overheating | See Symptom: "**Engine overheating**" |
| | Breakdown of injector | Replace the injector |

**NOTICE**

**If piston seizure occurs, the problems above will occur. Complaints from the customer are often related to these problems.**

**1. White smoke is emitted.**

**2. Lack of power**

## Lack of power

| Symptom | Possible cause | Action |
|---|---|---|
| **Lack of power (Supply pump)** | Damaged suction control valve (SCV) | Replace the suction control valve (SCV) |
| | Use of poor fuel | Use good quality fuel |
| **Lack of power (Intake)** | Clogged air cleaner | Clean element or replace element |
| **Lack of power (Overheating)** | | See Symptom: "**Engine overheating**" |
| **Lack of power (Fuel and injector)** | Air in fuel system | Repair and bleed air from fuel system |
| | Clogged fuel filter | Replace element |
| | Use of poor fuel | Use good quality fuel |
| | Breakdown of injector | Replace the injector |
| **Lack of power (Pistons, cylinder liners and piston rings)** | Seized or wear of piston | Replace the piston, piston rings and liner |
| | Worn or broken piston rings, piston and cylinder liner | Replace piston rings, piston and liner |
| **Lack of power (Other problems)** | Exhaust brake butterfly valve stuck in half-open position | Replace or repair exhaust brake |
| | Connecting rod bent | Replace or repair connecting rod |
| | Exhaust pipe or muffler crushed (increased back pressure) | Replace exhaust pipe or muffler |
| | Breakage of turbine or blower | Replace turbocharger |

## Leakage of exhaust

| Symptom | Possible cause | Action |
|---|---|---|
| **Leakage of exhaust (Head gasket)** | Fatigued gasket (aging) | Replace gasket |
| | Damage | Replace gasket |
| | Improper installation | Replace gasket |
| **Leakage of exhaust (Head bolts)** | Loose bolts | Tighten bolts |
| | Elongated bolts | Replace bolts |
| | Improper tightening torque or tightening sequence | Tighten properly |
| **Leakage of exhaust (Cylinder block)** | Cracking | Replace cylinder block |
| | Surface distortion | Repair or replace |
| | Fretting of cylinder liner insertion portion (insufficient projection of cylinder liner) | Replace cylinder block |
| **Leakage of exhaust (Cylinder head)** | Cracking | Replace cylinder head |
| | Surface distortion | Repair or replace |
| **Leakage of exhaust (Cylinder liners)** | Cracking | Replace cylinder liner |
| | Corrosion | Replace cylinder liner |
| | Insufficient projection of cylinder liner | Replace cylinder liner |

**NOTICE**

**If leakage of the exhaust occurs, the problems above will occur. Complaints from the customer are often related to these problems.**

**1. Lack of power.**

**2. The engine overheats.**

**3. The coolant is discolored.**

## Difficulty starting engine

| Symptom | Possible cause | Action |
|---|---|---|
| **Difficulty starting engine (Electrical system)** | Discharged battery | Charge battery |
| | Defective wiring in starter circuit | Repair wiring of starter |
| | Loose or open-circuit battery cable | Tighten battery terminal connections or replace battery cable |
| | Broken glow plug | Replace |
| **Difficulty starting engine (Supply pump)** | Defective supply pump<br>Use of poor fuel | Replace the supply pump<br>Use good quality fuel |
| **Difficulty starting engine (Air cleaner)** | Clogged element | Replace the element |
| **Difficulty starting engine (Fuel system)** | No fuel in tank | Supply fuel |
| | Clogged fuel line | Clean fuel line |
| | Air sucked into fuel system through fuel line connections | Tighten fuel line connections |
| | Clogged fuel filter | Replace element |
| | Loose connection in high-pressure line | Tighten sleeve nut of high-pressure line |
| | Water in fuel | Drain and clean fuel system |
| **Difficulty starting engine (Oil system)** | Oil viscosity too high | Use proper viscosity oil, or install an oil immersion heater and warm up oil |
| **Difficulty starting engine (Other problems)** | Seized piston | Replace piston, piston rings, and liner |
| | Seized bearing | Replace bearing and/or crankshaft |
| | Reduced compression pressure | Overhaul engine |
| | Ring gear damaged or worn | Replace the ring gear and/or starter pinion |
| | Improperly adjusted or broken | Adjust |

## Rough idling

| Symptom | Possible cause | Action |
|---|---|---|
| **Rough idling (Supply pump)** | Damaged suction control valve (SCV)<br>Use of poor fuel | Replace the suction control valve (SCV)<br>Use good quality fuel |
| **Rough idling (Injector)** | Breakdown of injector<br>Use of poor fuel | Replace the injector<br>Use good quality fuel |
| **Rough idling (Engine proper)** | Improper valve clearance | Adjust valve clearance |
| | Improper contact of valve seat | Replace or repair valve and valve seat |
| | Idling speed too low | Adjust idling speed |
| | Coolant temperature too low | Warm up engine |
| | Compression pressure of cylinders markedly different from one another | Overhaul engine |
| **Rough idling (Other problems)** | Clogged high pressure injection line | Replace line |
| | Leakage due to improper tightening of high pressure fuel line | Tighten sleeve nut |
| | Engine seizure | Replace pistons, piston rings and liners |
| | Incorrect valve timing | Replace camshaft |

## Diesel knock

| Symptom | Possible cause | Action |
|---|---|---|
| **Diesel knock (Supply pump)** | Damaged suction control valve (SCV)<br>Use of poor fuel | Replace the suction control valve (SCV)<br>Use good quality fuel |
| **Diesel knock (Injector)** | Breakdown of injector<br>Use of poor fuel | Replace the injector<br>Use good quality fuel |
| **Diesel knock (Fuel system)** | Use of poor fuel | Use good quality fuel |
| **Diesel knock (Other problems)** | Excessively cooled or heated engine | Warm up or cool engine |
| | Insufficient air intake | Correct |
| | Insufficient compression pressure | Repair |
| | Compression pressure leaks at cylinder head gasket | Replace head gasket |
| | Improper valve clearance or valve sticking | Adjust or repair |
| | Tappet sticking | Replace tappet and camshaft |

## Unusual engine noise

| Symptom | Possible cause | Action |
|---|---|---|
| **Unusual engine noise (Piston)** | Wear of piston pin boss or piston pin | Replace piston and/or piston pin |
| | Seized, damaged, or worn piston pin bushing | Replace piston pin bushing |
| | Worn pistons or cylinder liners | Replace piston or cylinder liner |
| | Damaged or seized piston | Replace piston and cylinder liner |
| | Foreign matter on top surface of the piston | Remove foreign matter and repair or replace piston, cylinder liner, and/or cylinder head |
| **Unusual engine noise (Valve mechanism)** | Incorrect valve clearance | Adjust valve clearance |
| | Valve cotter out of place | Replace valve cotter |
| | Seized valve stem | Replace valve and valve guide |
| | Broken valve | Replace valve |
| | Damaged rocker arm support | Replace rocker arm support |
| | Broken valve spring | Replace valve spring |
| **Unusual engine noise (Bearings seizure)** | Insufficient lubricating oil | Add oil |
| | Excessive or insufficient tightening of bearing housings | Retighten to specified torque |
| | Pits and scratches on bearing surface | Replace bearing and crankshaft |
| | Oil film formed on back of bearing | Replace bearing |
| | Improper installation of bearing | Replace bearing |
| | Reduction of spread dimension of bearing | Replace bearing |
| | Distorted bearing housing | Replace or correct bearing housing |
| | Excessive oil clearance | Replace bearing |

| Symptom | Possible cause | Action |
|---|---|---|
| **Unusual engine noise (Various other parts)** | Exhaust gas leakage from exhaust pipe joints | Retighten joints |
| | Loosen or missing intake manifold flange gasket | Retighten or replace |
| | Intake valve seating is not concentric | Replace or correct the valve and valve seat |
| | Intake gas leakage | Retighten |
| **Unusual engine noise (Other problems)** | Loose cooling fan mounting bolts or fan pulley nut | Tighten the fan and crankshaft pulley |
| | Lack of lubricating oil (coolant pump, valves, etc.) | Lubricate |
| | Worn timing gear | Replace the timing gear |
| | Breakage of turbine or blower | Replace turbocharger |

**NOTICE**
**The items on this page concern unusual engine noise which is due to causes other than those given for diesel knock.**

# ENGINE ASSEMBLY (COMMON RAIL SYSTEM)

EN01H16ZZZ010F01001002

## Engine does not start

| Symptom | Possible cause | Action |
|---|---|---|
| **Engine does not start (Fuel not reaching supply pump)** | Fuel lines clogged or damaged | Clean or replace fuel lines |
| | Fuel filter clogged | Clean or replace the filter element |
| | Air in fuel caused by improper connections of fuel line between fuel tank and feed pump | Repair connections |
| | Filter incorporated in inlet side of feed pump clogged | Remove foreign material |
| | Breakdown feed pump | Replace the supply pump |
| **Engine does not start (Fuel reaching supply pump)** | Leakage due to improper tightening of high pressure fuel line | Tighten sleeve nut |
| | Breakdown ECU | Replace the ECU |
| **Engine does not start (Injector faulty)** | Injector broken | Replace the injector |
| **Engine does not start (Electrical system)** | Defective sensors or circuits | Refer to the chapter "**FUEL CONTROL**". |
| **Engine starts and stops** | Fuel lines clogged | Clean or replace fuel lines |
| | Air in fuel caused by damaged fuel lines or improper connection of fuel lines | Repair fuel lines or replace fuel lines and gaskets |
| **Engine has low power (Injector faulty)** | Injector broken | Replace the injector |
| **Engine has low power (Electrical system)** | Defective sensors or circuits | Refer to the chapter "**FUEL CONTROL**". |

## Excessive smoke

| Symptom | Possible cause | Action |
|---|---|---|
| **Excessive smoke (Black smoke)** | Defective sensors or circuits | Refer to the chapter "**FUEL CONTROL**". |
| | Defective injector | Replace the injector |
| **Excessive smoke (White smoke)** | Water in fuel | Check and clean fuel lines |
| | Glow plug not operating | Check glow plug circuit |

## Low idle speed irregular

| Symptom | Possible cause | Action |
|---|---|---|
| **Low idle speed irregular** | Defective sensors or circuits | Refer to the chapter "**FUEL CONTROL**". |
| | Defective injector | Replace the injector |

# TURBOCHARGER (J08E)

## TURBOCHARGER

EN01H16ZZZ010F01002001

**1. Table 1-1 Troubleshooting-Engine Exhaust Lacks Power or Engine Exhaust Emits Black Smoke**

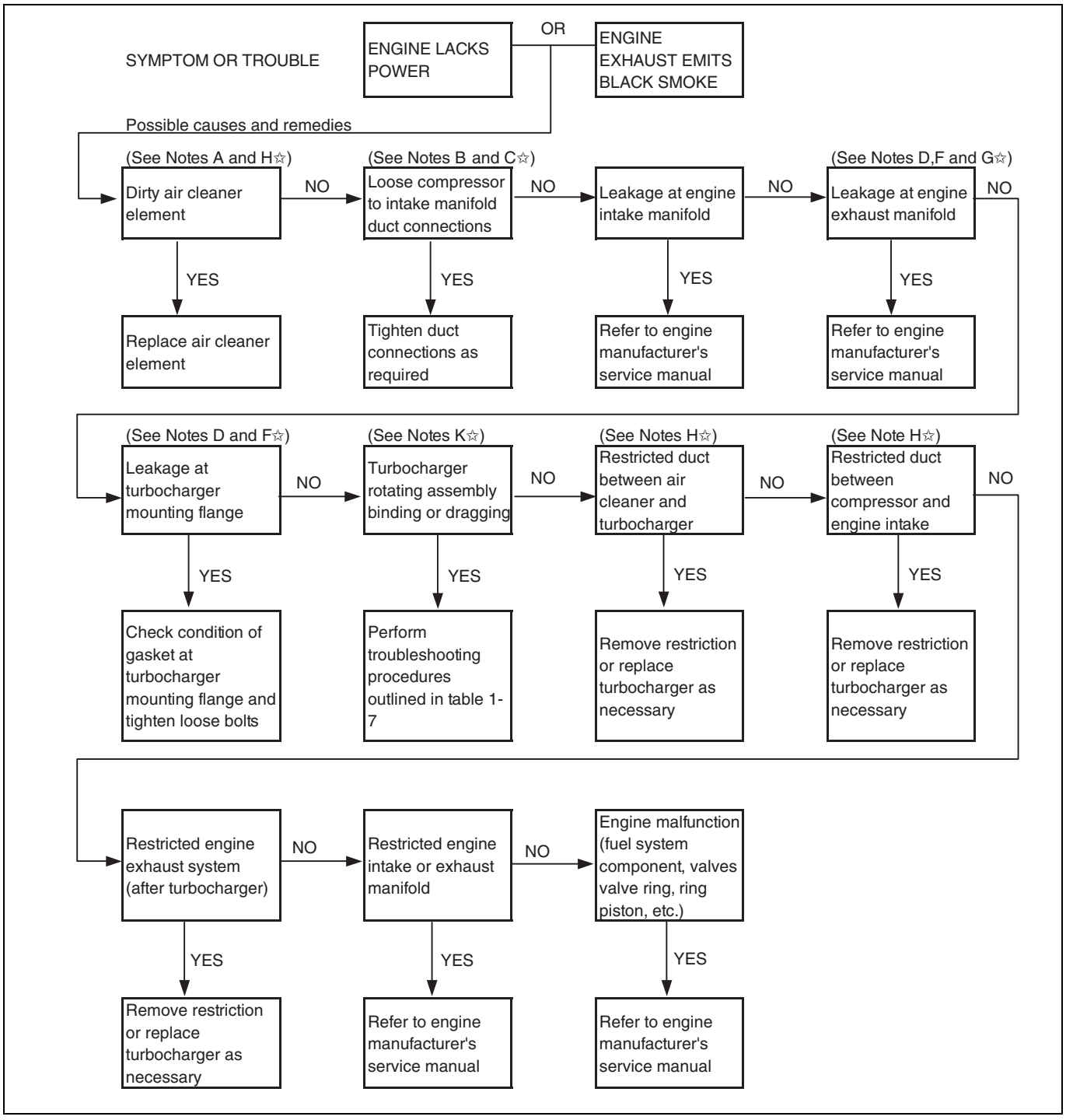


SAPH16ZZZ0100001

☆ Shown on Table 1-9

**2. Table 1-2 Troubleshooting Engine Exhaust Emits WHITE or BLUE SMOKE**

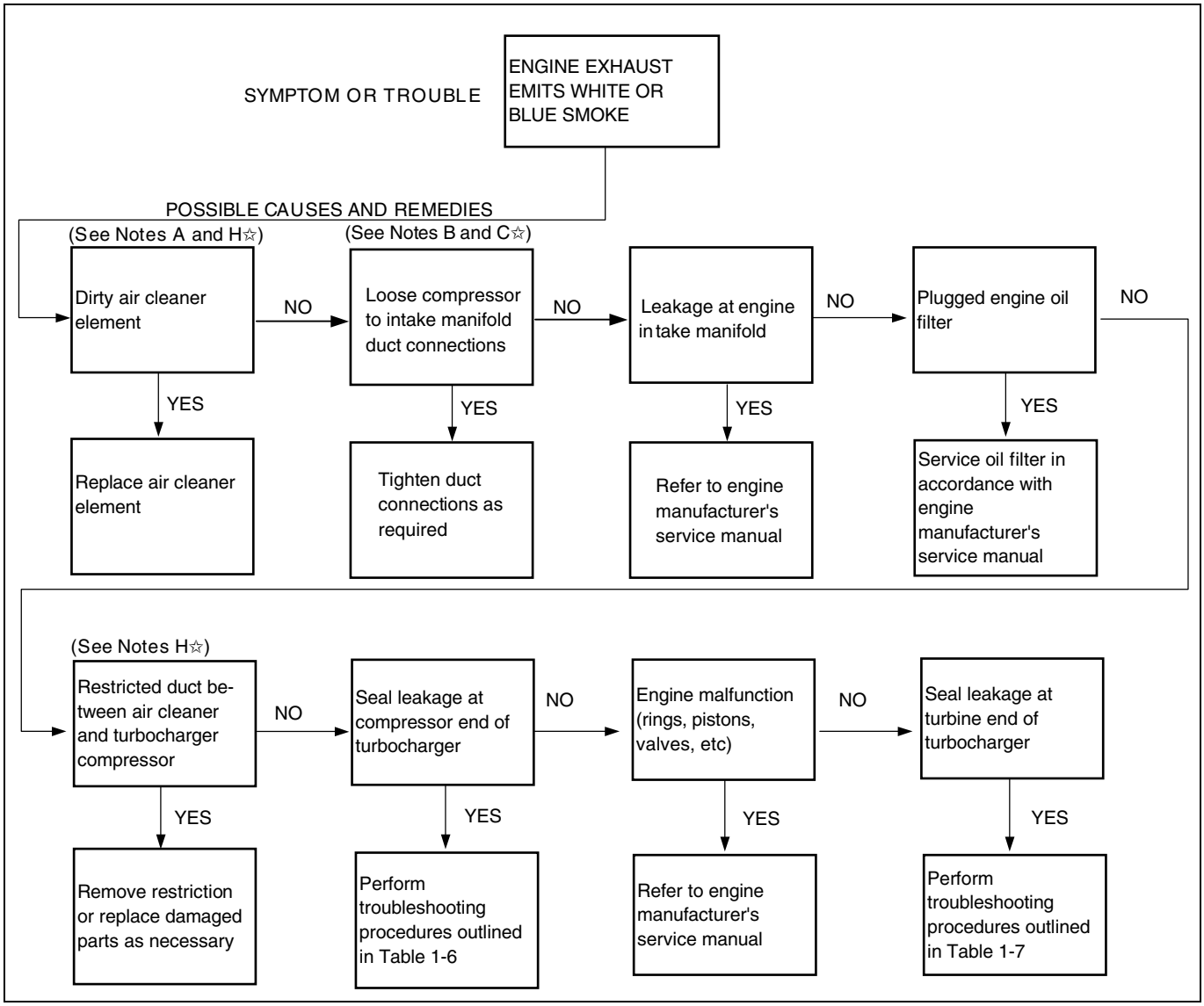


SAPH16ZZZ0100002

☆ Shown on Table 1-9

### 3. Table 1-3 Troubleshooting Engine Oil Consumption Excessive

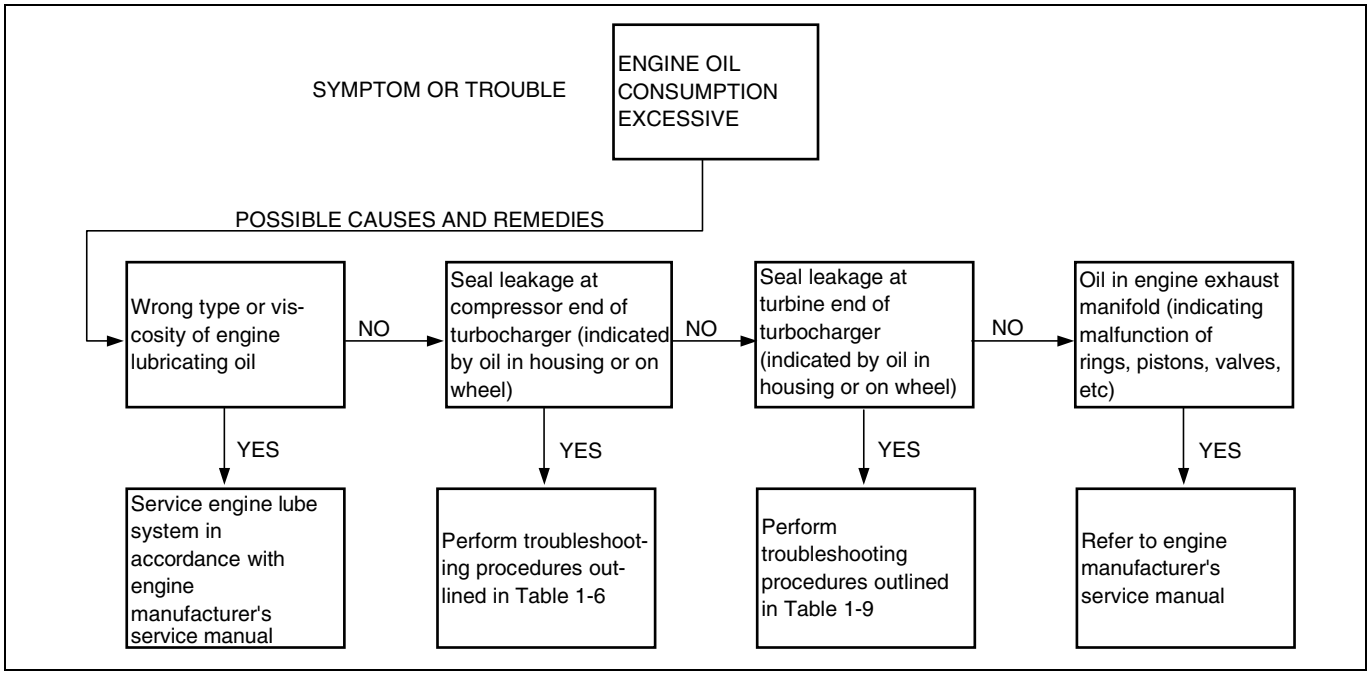


SAPH16ZZZ0100003

**4. Table 1-4 Troubleshooting Noisy Turbocharger**

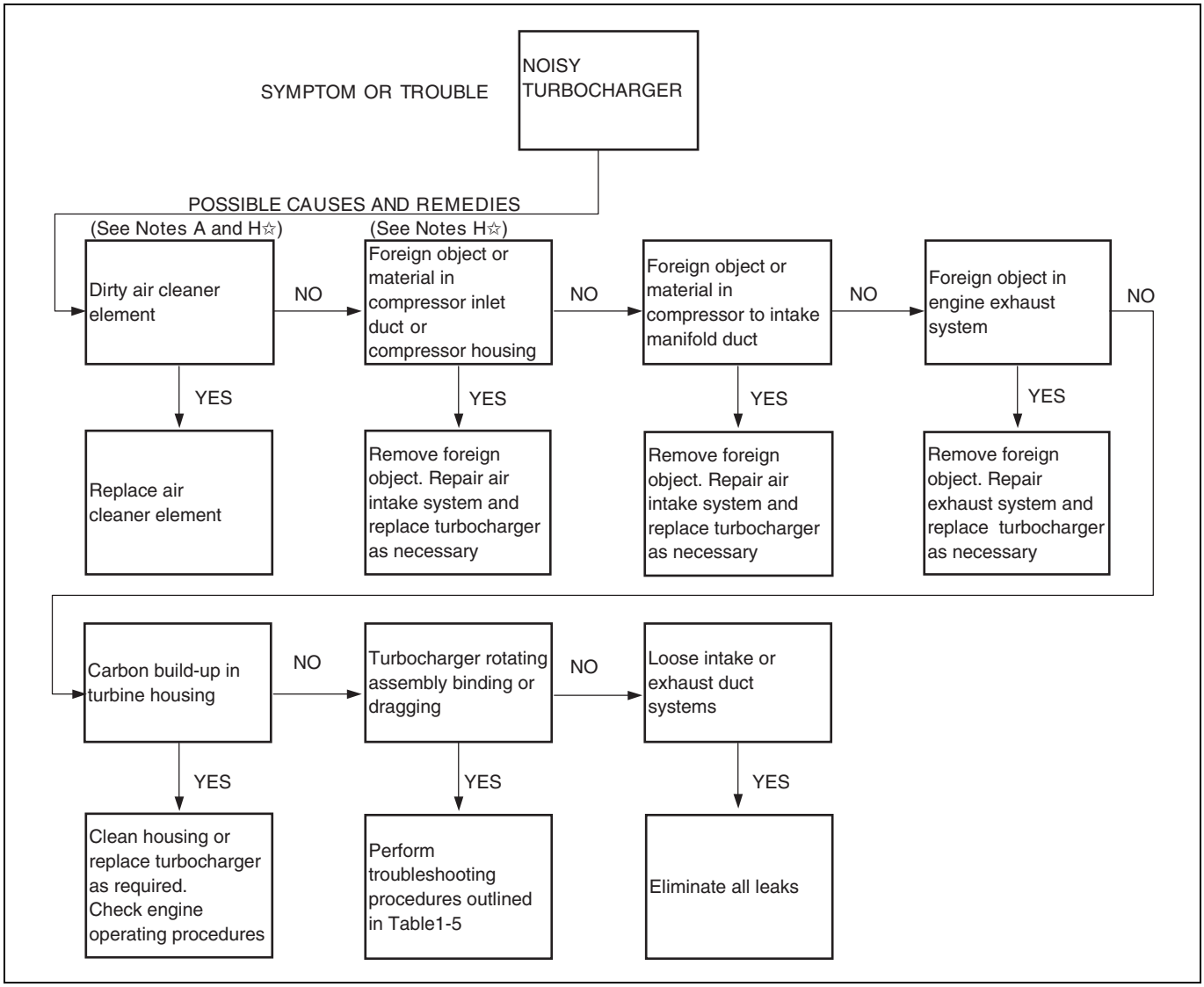


SAPH16ZZZ0100004

☆ Shown on Table 1-9

**5. Table 1-5 Troubleshooting Turbocharger Rotating Assembly Binding or Dragging**

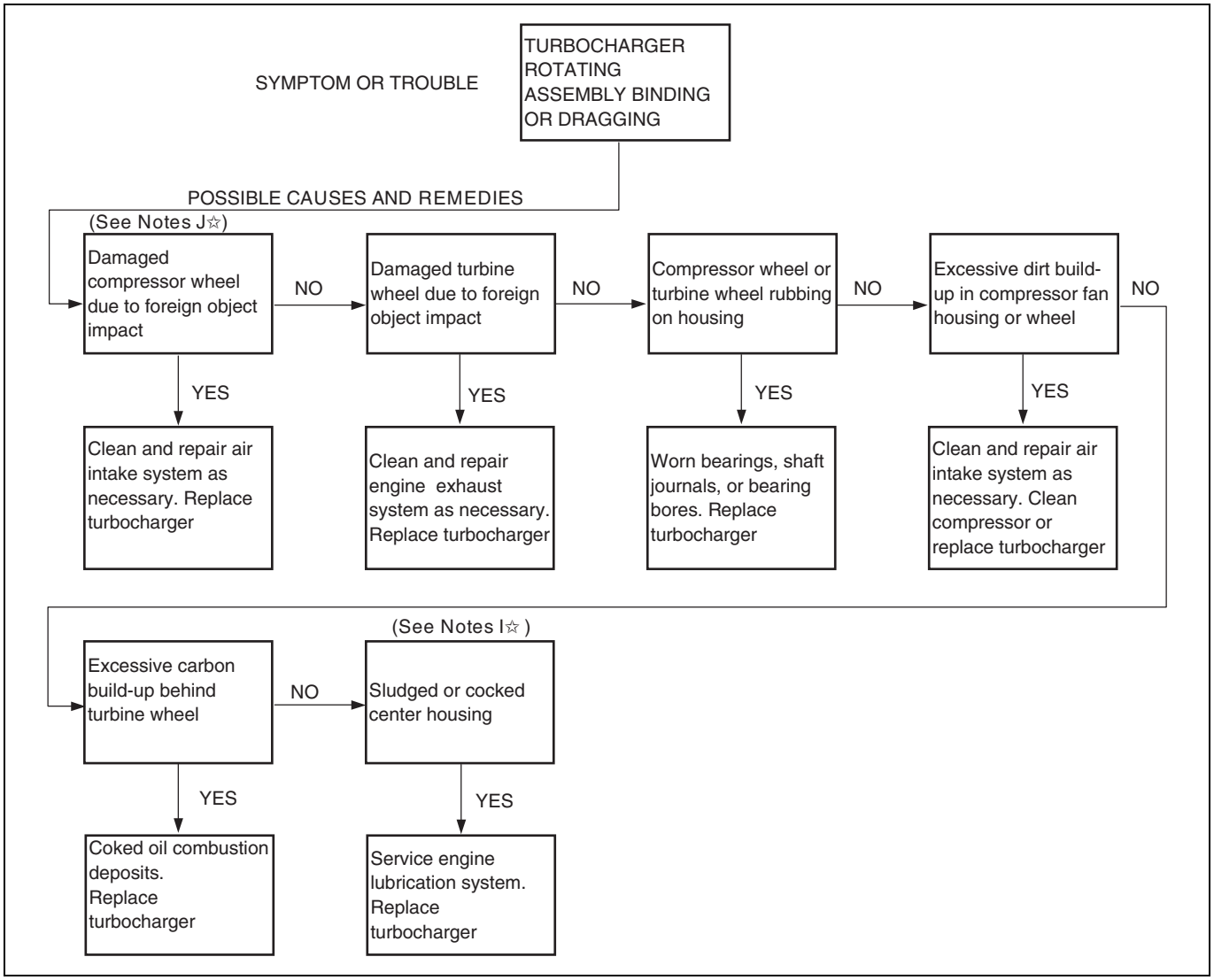


SAPH16ZZZ0100005

☆ Shown on Table 1-9

**6. Table 1-6 Troubleshooting-Seal Leakage at Compressor End of Turbocharger**

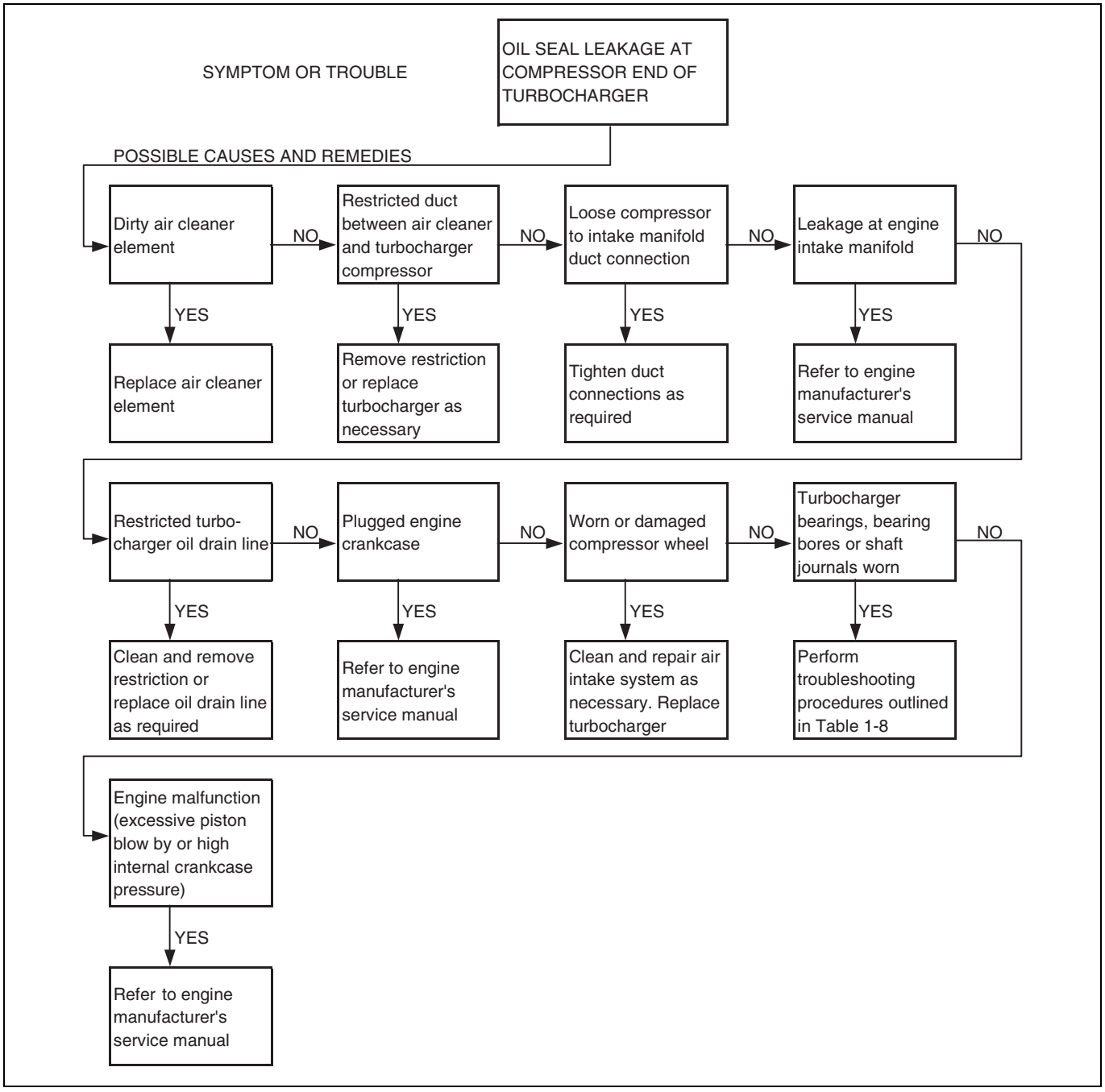


SAPH16ZZZ0100006

**7. Table 1-7 Troubleshooting-Seal Leakage at Turbine End of Turbocharger**

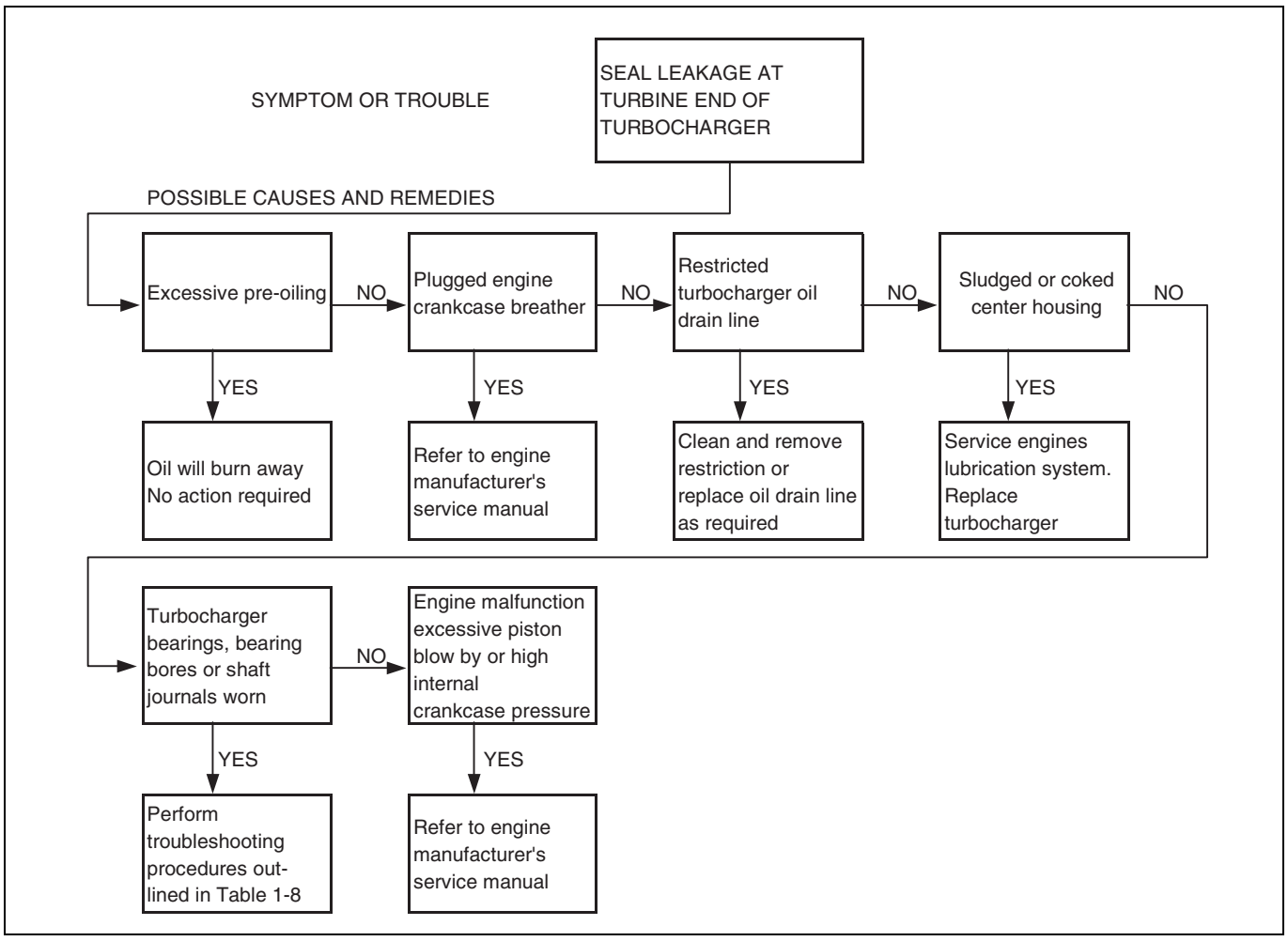


SAPH16ZZZ0100007

**8. Table 1-8 Troubleshooting-Turbocharger Bearings, Bores, or Journals are Worn**

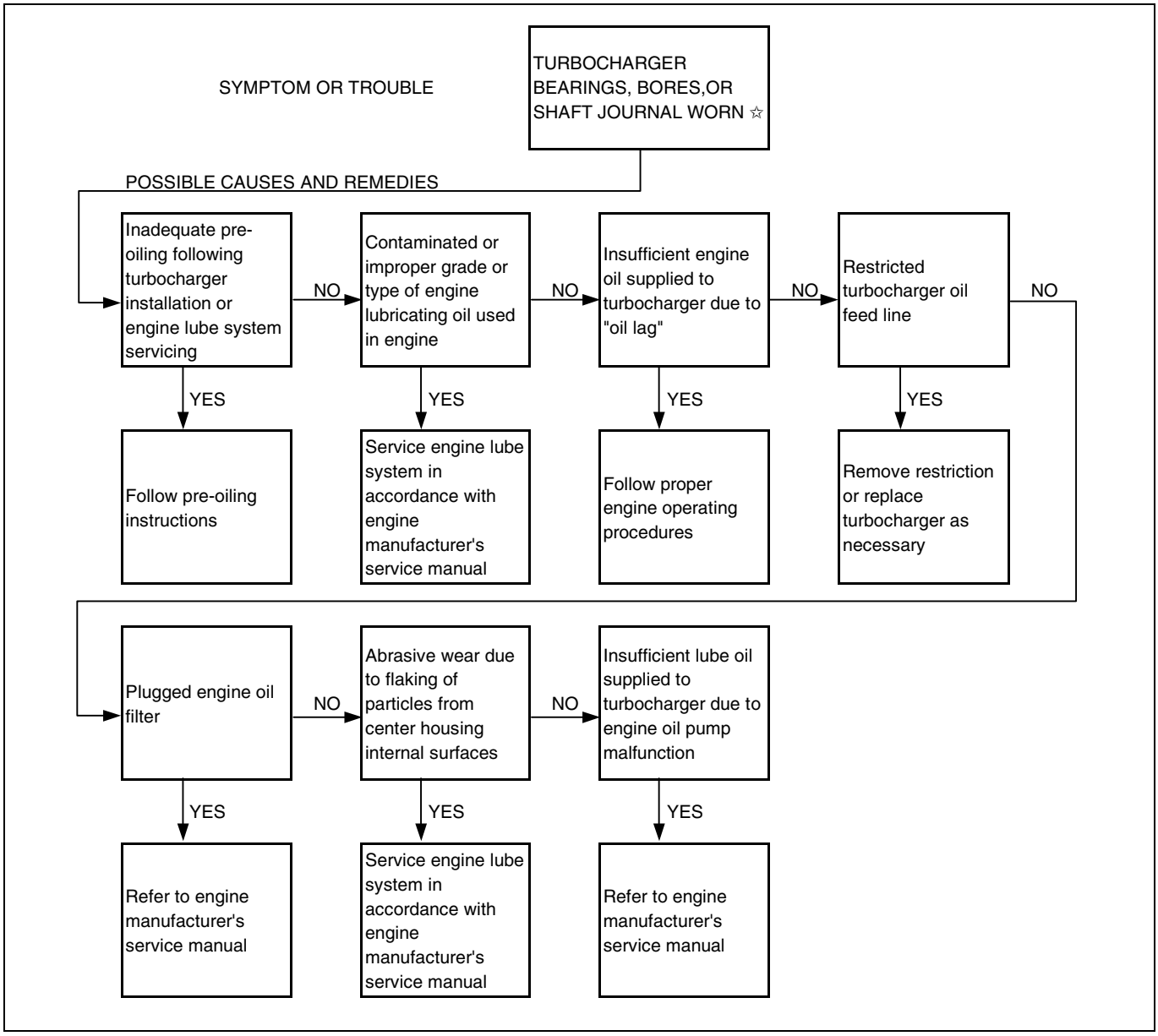


SAPH16ZZZ0100008

☆ Replace turbocharger, then use this table to determine cause of failure.

**9. Table 1-9 Troubleshooting Procedures Notes**

| | |
|---|---|
| A | Refer to engine manufacturer's service manual for inspection requirements and replacement specifications. |
| B | With engine stopped, check duct clamping devices for tightness. |
| C | With engine running at idle speed, lightly spray duct connections with starting fluid. Leaks at connections will be indicated by an increase in engine speed due to the starting fluid being drawn into the compressor and pumped into the engine combustion chambers. |
| D | With engine running at idle speed, check duct connections for leaks by applying lightweight oil or liquid soap to areas of possible leakage and checking for bubbles. Exhaust gas leakage between the engine block and the turbocharger inlet will also create a noise level change. |
| E | With engine running at idle speed, check for unusual noise and vibration. If either condition is noted, shut down the engine immediately to protect the turbocharger and engine from further damage. With the engine stopped, check the turbocharger shaft wheel assembly for damage as outlined Note I, below. |
| F | With engine running, a change in the noise level to a higher pitch can indicate air leakage between the air cleaner and the engine or a gas leak between the engine block and the turbocharger inlet. |
| G | Exhaust gas leakage may be indicated by hat discoloration in the area of the leak. |
| H | With the engine running, noise level cycling from one level to another can indicate a plugged air cleaner, a restriction in the air-cleaner to compressor duct, or a heavy build-up of dirt in the compressor housing or on the compressor wheel. |
| I | Internal inspection of the center housing can be accomplished by removing the oil drain line and looking through the oil drain opening. When a slugged or cocked condition exists, a heavy sludge build-up will be seen on the shaft between the bearing journals and in the center housing from the oil drain opening back to the turbine end. |
| J | Thorough cleaning of the air intake system is essential following compressor wheel damage due to foreign object impact. In many cases, metal pieces from the wheel become embedded in the air cleaner element. If the element is not changed, these metal pieces can be drawn into the replacement turbocharger and cause it to fail in the same manner as the original unit. |
| K | With the air inlet and exhaust gas ducting removed from the turbocharger, examine both the compressor and turbine wheels for blade damage. Examine the outer blade tip edges for evidence of rubbing on housing surfaces. |

- Turn the rotating assembly by hand and feel for dragging or binding. Push the rotating assembly side-ways while rotating to feel for wheel rub. If there is any indication of rubbing, perform the bearing clearance inspection procedure. If the rotating assembly rotates freely and there is no evidence of binding or rubbing, it can be assumed that the turbocharger is serviceable.

# ALTERNATOR (J08E: REMY 12V-130A, 135A, 180A, 200A)

## ALTERNATOR

EN01H16ZZZ010F01003001

| Symptom | Possible cause | Action |
|---|---|---|
| **Charge warning light does not light with starter switch ON and engine off** | Fuse blown | Determine cause and replace fuse |
| | Light burned out | Replace light |
| | Wiring connection loose | Tighten loose connections |
| | IC regulator faulty | Replace IC regulator |
| **Charge warning light does not go out with engine running (Battery requires frequent recharging)** | Drive belt loose or worn | Adjust or replace drive belt |
| | Battery cables loose, corroded or worn | Repair or replace cables |
| | Fuse blown | Determine cause and replace fuse |
| | Fusible link blown | Replace fusible link |
| | IC regulator or alternator faulty | Check charging system |
| | Wiring faulty | Repair wiring |

# STARTER (J08E)

## STARTER

EN01H16ZZZ010F01004001

| Symptom | Possible cause | Action |
|---|---|---|
| **Engine does not crank, or cranks slowly. (Starter switch)** | Poor contact | Replace the starter switch. |
| **Engine does not crank, or cranks slowly. (Battery)** | Discharged battery | Charge. |
| | Short circuited between electrodes | Replace battery. |
| | Poor contact at battery terminal | Clean or retighten. |
| **Engine does not crank, or cranks slowly. (Engine oil)** | Improper viscosity oil | Change oil. |
| **Engine does not crank, or cranks slowly. (Magnetic switch)** | Poor contact caused by burnt contact plate | Replace the magnetic switch assembly. |
| | Contact plate worn out | Replace the magnetic switch assembly. |
| | Holding coil disconnected (Overrunning clutch moves back and forth) | Replace the magnetic switch assembly. |
| | Pull-in coil disconnected or short circuited | Replace the magnetic switch assembly. |
| **Engine does not crank, or cranks slowly. (Starter relay)** | Defective or poor contact | Repair or replace the starter relay. |
| **Engine does not crank, or cranks slowly. (Starter)** | Brush worn out | Replace. |
| | Commutator burnt out | Replace the armature assembly. |
| | Commutator worn out | Replace the armature assembly. |
| | Field winding shorted or grounded | Replace the yoke assembly. |
| | Armature winding shorted or grounded | Replace the armature assembly. |
| | Insufficient brush spring tension | Replace the brush spring. |
| | Poor contact between magnetic switch and field windings | Repair. |
| | Armature contact pole core because of worn bearing bushing or bent armature shaft | Replace the end frame or armature assembly. |
| | Overrunning clutch malfunction | Replace. |
| **Engine does not crank while starter is running in good condition. (Overrunning clutch)** | Overrunning clutch malfunction | Replace. |
| | Pinion teeth worn out | Replace. |
| | Poor sliding of spline teeth | Remove foreign particles, dirt or replace. |
| **Starter does not stop running. (Starter switch)** | Contacts keep closing | Replace. |
| | Key switch sticks | Replace. |
| | Overrunning clutch sticks to armature | Repair or replace overrunning or armature. |
| **Starter does not stop running. (Starter relay)** | Contacts keep closing | Repair or replace. |

# AIR COMPRESSOR (J08E: 340 $cm^3$)

## AIR COMPRESSOR

EN01H16ZZZ010F01005001

| Symptom | Possible cause | Action |
|---|---|---|
| **Charging efficiency dropped (Valve)** | Abnormal wear, damage, or poor contact | Replace. |
| **Charging efficiency dropped (Piston, cylinder liner and piston rings)** | Worn piston and cylinder liner | Replace. |
| | Seized piston | Replace (piston, piston rings and cylinder liner). |
| | Worn or broken piston ring | Replace. |
| **Charging efficiency dropped (Air pipe and joints)** | Leakage of high-pressure air | Replace or tighten pipe joint. |
| | Clogged air pipe | Replace. |
| **Charging efficiency dropped (Air cleaner)** | Clogged element | Clean or replace element. |
| **Noisy operation (Piston)** | Wear of piston pin boss or piston pin | Replace. |
| | Seized, damaged or worn connecting rod small end | Replace. |
| | Worn piston or cylinder liner | Replace. |
| | Damaged or seized piston | Replace. |
| | Foreign particles on the top surface of piston | Clean or replace. |
| **Noisy operation (Bearing)** | Damaged, or worn ball bearing and/or connecting rod bearing | Replace. |
| **Excessive carbon or oil in the compressor cylinder head or discharge line (Piston ring)** | Worn, sticking or broken piston rings | Replace piston rings and/or cylinder liner. |
| | Insufficient piston ring tension | Replace piston rings and/or cylinder liner. |
| | Malfunction of piston rings | Replace piston rings and/or cylinder liner. |
| **Excessive carbon or oil in the compressor cylinder head or discharge line (Cylinder liner and piston rings)** | Worn cylinder liner and piston rings | Replace. |

# CLUTCH MAIN UNIT

## CLUTCH ASSEMBLY (EATON SAS1402)

EN01H16ZZZ010F01006002

| Symptom | Possible cause | Action |
|---|---|---|
| **Clutch dragging.** | Clutch disc distorted or warped. | Replace clutch disc. |
| | Transmission input shaft worn. | Replace input shaft and check clutch hub for excessive wear. If worn, replace disc. Check flywheel housing alignment. |
| | Excessive clutch control parts wear. | Replace control parts. |
| | Clutch control parts not functioning properly. | Replace control parts. |
| | Improper clutch control adjustment. | Adjust clutch control. |
| | Clutch disc assembly too thick. | Replace clutch disc. |
| **Clutch slipping.** | Release lever and release bearing clearance incorrectly adjusted. | Adjust clearance. |
| | Clutch disc facing gummed with oil or grease. | Replace disc assembly. |
| | Release bearing worn. | Replace bearing. |
| | Clutch pedal free-play incorrectly adjusted. | Adjust free-play. |
| | Compression spring weak. | Replace cover assembly. |
| | Clutch facing worn. | Replace disc assembly. |
| | Failing to remove plate from the clutch pressure plate assembly. | Remove plate. |
| | Driver riding clutch pedal. | Do not ride the clutch pedal. |
| **Vehicle vibrates when starting.** | Improper engine idling. | Adjust idling. |
| | Clutch control incorrectly adjusted. | Adjust clutch control. |
| | Clutch disc facing gummed with oil or grease. | Replace disc assembly. |
| | Glazed flywheel friction surface. | Deglaze flywheel surface with coarse emery cloth, stroking parallel to machining lines. |
| | Clutch disc distorted or warped. | Replace disc. |
| | Improper clutch cover tightening. | Tighten bolts. |
| | Flywheel housing misalignment. | Replace flywheel housing. |
| **Abnormal noise in transmission.** | Malfunction of engine. | Tune up engine. |
| | Improper clutch disc used. | Replace proper clutch disc. |
| | Trouble in transmission. | Check transmission. |
| | The engine idle speed is low. | Increase the idle speed. |

| Symptom | Possible cause | Action |
|---|---|---|
| **Noisy clutch.** | Release bearing worn or dried. | Replace release bearing. |
| | Pilot bearing worn or dried. | Replace pilot bearing. |
| | Clutch disc distorted or warped. | Replace clutch disc. |
| | Flywheel housing misalignment. | Replace flywheel housing. |
| | Transmission input shaft or clutch disc spline worn. | Clean and lubricate or replace. |
| | Insufficient lubrication of pedal and its accessories. | Lubricate. |
| | Insufficient lubrication of release shaft and release bearing hub. | Lubricate. |
| | Transmission input shaft retainer rusted or soiled. | Clean or replace if rusted. |
| | Clutch pedal free-play incorrectly adjusted. | Adjust free-Play. |
| **Clutch pedal cannot be depressed.** | Clutch control incorrectly adjusted. | Adjust clutch control. |
| | Insufficient lubricant release shaft and release bearing hub. | Lubricate. |
| **Change in clutch pedal give.** | Air trapped in clutch fluid. | Bleed air. |

# AUTOMATIC TRANSMISSION

## AUTOMATIC TRANSMISSION ASSEMBLY

EN01H16ZZZ010F01009001

**NOTICE**
**When diagnosing transmission problems, refer to the Allison Shop Manual or troubleshooting procedures for detailed information on items that could be causing the problem.**

# TRANSMISSION/TRANSFER CONTROL

# (EATON MANUAL TRANSMISSION)

## TRANSMISSION CONTROL UNIT

EN01H16ZZZ010F01011001

**1. MANUAL TRANSMISSION**

| Symptom | Possible cause | Action |
|---|---|---|
| **Unable to shift the gear or very difficult to shift when the engine is turned off.** | Damaged shift lever assembly | Replace shift lever. |
| | Damaged or broken transmission upper cover (lever, spring, etc.) | Replace. |
| | The looseness of tightening bolt and nut | Inspect and tighten each bolt and nut. |
| **Gear disengages when driving on bumpy roads.** | Loose control lever joint | Tighten or replace. |
| **The play of the lever is excessive.** | A joint is seriously worn | Replace the joint. |
| | The looseness of tightening bolt and nut | Inspect and tighten each bolt and nut. |

# TRANSMISSION/TRANSFER CONTROL

# (ALLISON AUTOMATIC TRANSMISSION)

## TRANSMISSION CONTROL UNIT

EN01H16ZZZ010F01012001

**1. AUTOMATIC TRANSMISSION**

(1) Allison 2200RDS, 2200HS, 2500RDS, 2500HS auto-transmission problem, refer to the Allison shop manual or troubleshooting procedures for detailed information on items that could be causing the problem.

# PROPELLER SHAFT (SPL 100, 140)

## PROPELLER SHAFT ASSEMBLY

EN01H16ZZZ010F01013001

| Symptom | Possible cause | Action |
|---|---|---|
| **Abnormal vibration when driving.** | Looseness of universal joint yoke and flange tightening nuts. | Tighten the nuts. |
| | Looseness of universal joint flange lock nut. | Replace the lock nut with new one, then tighten the lock nut with specified torque and caulk the nut securely. |
| | Excessively bent propeller shaft. | Replace the shaft. |
| | Worn or damaged universal joint. | Replace the universal joint. |
| | Worn or damaged center bearing. | Replace the bearing. |
| | Worn or damaged center bearing rubber cushion. | Replace the rubber cushion. |
| | Incorrect phasing of the yokes. | Match the phasing arrows correctly. |

# DIFFERENTIAL CARRIER (MERITOR RS-17, 19, 21 AND 23)

## DIFFERENTIAL CARRIER ASSEMBLY

EN01H16ZZZ010F01014001

| Symptom | Possible cause | Action |
|---|---|---|
| **Abnormal noise (Bearing system)** | Worn or damaged pinion bearings | Replace bearings. |
| | Worn or damaged differential side bearings | Replace bearings. |
| | Loose pinion bearings | Adjust bearing preload. |
| | Loose differential side bearings | Adjust bearing preload. |
| **Abnormal noise (Gear system)** | Inadequate backlash on ring gear and pinion gear | Adjust backlash. |
| | Worn thrust washers | Replace. |
| | Worn differential spider | Replace. |
| | Worn or damaged ring gear and pinion | Replace. |
| | Worn or damaged differential side gear and pinion | Replace. |
| | Loose ring gear bolts | Tighten bolts. |
| | Inadequate tooth contact of ring gear and pinion gear | Replace or adjust tooth contact. |
| | Worn opinion spline | Replace. |
| **Abnormal noise (rear axle system)** | Worn rear axle shaft spline | Replace. |
| | Worn hub bearings | Replace. |
| | Loose hub bearings | Adjust bearing preload. |
| | Loose differential case tightening bolts | Tighten bolts. |
| **Abnormal noise (Oil system, etc.)** | Insufficient oil | Add oil, check for leakage. |
| | Poor oil quality | Change oil. |
| | Abnormal propeller shaft noise | Refer to the chapter "PROPELLER SHAFT". |

# BRAKE EQUIPMENT (MODELS WITH HYDRAULIC BRAKE)

## SERVICE BRAKE ASSEMBLY

EN01H16ZZZ010F01015001

| Symptom | Possible cause | Action |
|---|---|---|
| **No response upon working the pedal or there is the feeling of stepping on sponge (Air trapped in the brake lines)** | Insufficient seal of master cylinder secondary cup | Replace master cylinder assembly. |
| | Insufficient air bleeding | Bleed air from brake line. |
| **No response upon working the pedal or there is the feeling of stepping on sponge** | Vapor lock in brake system | Bleed air from brake. |
| | Leakage of fluid from brake system | Tighten further or replace gasket, O-ring, cup, etc. |
| | Poor quality brake fluid or improper fluid (low boil point) | Drain the system, flush and refill with the recommended fluid. |
| **Brake fluid decreases** | Leakage of brake fluid from brake system | Tighten further or replace gasket, O-ring, etc. |
| | Leakage of brake fluid from master cylinder | Replace master cylinder assembly. |
| | Worn pad | Replace pad if it is worn to limit. Refill brake fluid. |
| **Excessive pedal travel (though there is response upon working the pedal)** | Insufficient brake fluid in the master cylinder | Search the cause of insufficient fluid, repair or replace it. Then refill fluid and bleed air. |
| | Air trapped in the brake lines | Bleed air from brake lines. |
| | Leakage of fluid from brake system | Check the leak point, repair or replace. |
| | Poor quality brake fluid or improper fluid | Drain the system, flush and refill with the recommended fluid. |
| | Contamination of the brake fluid | Replace the brake system and refill with the recommended fluid. |
| | Insufficient seal of the master cylinder cup | Replace master cylinder assembly. |
| **Unequal or unstable braking** | Pad is wet with grease or fluid | Replace the pad. |
| | Defective pad material (improper combination) | Replace the pad. |
| | Non-uniform pad contact | Correct. |
| | Excessive abrasion loss of rotors | Correct or replace. |
| | Distorted rotors | Correct or replace. |
| | Loose hub bearing | Adjust or replace the bearing. |
| | Improper or unequal pneumatic pressure of tire | Adjust to proper pneumatic pressure. |
| | Clogging of brake system | Replace, the pipe, hose, etc. |
| | Abnormal piston operation of the disc brake | Check the piston seal. |

| Symptom | Possible cause | Action |
|---|---|---|
| **Brake drags or does not release** | Improper return of master cylinder piston | Replace master cylinder assembly. |
| | Clogging of brake system | Replace the pipe, hose, etc. |
| | Constricted master cylinder reservoir vent | Clean vent passage in reservoir cap. |
| | Self applied booster (fluid flow too high) | Repair or replace power steering pump. |
| | Soft or swollen master cylinder seals due to brake fluid contamination | Flush out old brake fluid then replace master cylinder and add new brake fluid. |
| | Clogging compensating valve of master cylinder | Replace master cylinder assembly. |
| | Improper return of brake pedal | Repair or replace. |
| | Improper return of brake booster piston | Replace booster assembly. |
| | Improper installation pad | Check the installed condition of the pad. Repair. |
| | Improper return of caliper piston | Repair or replace. |
| **Not enough braking, or too much pedal resistance (Wheel brake and rotor)** | Pad is wet with grease or fluid | Replace the pad. |
| | Improper contact of rotor and pad | Correct. |
| | Improper pad material or glazed pad | Correct. |
| | Deformation or hardening of rotor | Correct or replace. |
| | Excessively worn pad | Replace. |
| | Glazed rotor | Correct. |
| **Not enough braking, or too much pedal resistance (Control system pipings)** | Leakage of brake fluid from brake system | Tighten further or replace gasket. |
| **Not enough braking, or too much pedal resistance (Lack of power steering pump pressure)** | Improper operation of power steering pump | Repair or replace. |
| | Clogging of brake system | Replace pipe, hose, etc. |
| **Not enough braking, or too much pedal resistance (Not enough power steering pump pressure or rise of power steering pump pressure)** | Check the pipe joints for tightness | Repair. |
| | There is a rupture or twist in the pipe leading to the power steering pump | Replace. |
| | The hose is ruptured or collapsed | Replace. |
| | Power steering pump relief valve setting too low | Replace power steering pump. |
| | Fluid contamination | Drain, flush and refill system, replace booster or master cylinder as appropriate and power steering reservoir filter as necessary. |

| Symptom | Possible cause | Action |
|---|---|---|
| **Not enough braking, or too much pedal resistance** | Lack of brake fluid | Supply brake fluid periodically. |
| | Improper power steering pump | Replace. |
| | Stuck piston in the master cylinder | Replace master cylinder assembly. |
| | Insufficient power steering fluid | Refill to proper level. |
| | Air trapped in the power steering fluid or brake fluid | Search the cause, refill the fluid and bleed air. |
| | Binding brake pedal linkage | Overhaul and lubricate. |
| | Worn or damaged brake booster | Replace booster assembly. |
| | Leakage around the check ball in the backup pump | Replace the backup pump. |
| **Brake squeal** | Improper pad material or glazed pad | Replace pad. |
| | Pad back plate contact with rotor | Replace pad. |
| | Deformation or wear of rotor | Repair or replace. |
| | Intrusion of foreign matter between rotor and pad | Clean the surface of pad or replace. |
| | Loose hub bearing | Adjust or replace bearing. |
| | Hardening of pad surface | Replace pad. |
| | Different pad | Replace proper pad. |
| | Rotor is wet with grease, fluid and dust | Check the leakage position and repair. Clear the rotor. |
| **Impossible to bleed air completely** | Piston cup of master cylinder sucks in air | Replace master cylinder assembly. |
| | Improper tightness of joints of brake system | Tighten further or replace gasket. |
| **Pulsating brake pedal** | ABS operation | Feature of ABS operation (No problem). |
| | Wheel bearings loose or worn | Readjust or replace. |
| | Excessive rotor thickness variation | Repair or replace. |
| **Decreasing pedal travel** | Clogging of the compensating valve of master cylinder | Replace master cylinder assembly. |
| | Swollen pressure seals of master cylinder | Replace master cylinder assembly. |
| | Improper return of the master cylinder piston | Replace master cylinder assembly. |
| **Delay pedal return** | Broken return spring | Replace master cylinder assembly. |
| | Restricted fluid return line of the power steering or hydraulic pump | Remove the obstruction and replace the line. |
| | Swollen power piston seal of the booster | Replace booster assembly. |
| **Backup pump operates continuously** | Abnormal brake switch | Replace. |
| | Abnormal monitor module | Replace. |
| | Abnormal relay | Replace. |
| | Abnormal flow switch | Remove switch components, clean and inspect for damage or contamination and replace if necessary. |
| | Binding pedal linkage | Disassemble and lubricate. |

| Symptom | Possible cause | Action |
|---|---|---|
| **Backup pump does not operate** | Abnormal brake switch | Replace. |
| | Abnormal monitor module | Replace. |
| | Abnormal relay | Replace. |
| | Abnormal flow switch | Remove switch components, clean and inspect for damage or contamination and replace if necessary. |
| | Binding pedal linkage | Disassemble and lubricate. |
| | Abnormal backup pump | Replace backup pump. |
| | Abnormal battery | Recharge or replace. |
| **Power steering pump is noisy** | Insufficient power steering fluid | Refill proper level. |
| | Air trapped in the power steering fluid | Bleed air from power steering system. |
| | Contamination in the power steering fluid | Replace power steering pump and fluid. |
| **Severe reaction to pedal pressure (Grabby brakes)** | Throttle valve cut in spring defective | Replace booster assembly. |
| | Binding brake pedal linkage | Disassemble and lubricate. |
| | Incorrect pads, or pads loose on plate | Replace pads. Be sure pads are tight on caliper. |
| | Grease or brake fluid on pad | Repair grease seal or caliper as required. Replace pads in axle sets. |
| | Loose caliper on caliper mounting bracket | Retighten. |
| **Leakage between booster and master cylinder** | Primary pressure seal or backup ring of the master cylinder is worn or damaged | Replace master cylinder assembly. |
| | Seal or O-ring of the booster end cap assembly is worn or damaged | Replace booster assembly. |

| Symptom | Trouble shooting and repair |
|---|---|
| Leakage from booster or power steering pump | Refer to TROUBLESHOOTING, BRAKE EQUIPMENT (MODELS WITH HYDRAULIC BRAKE), SERVICE BRAKE ASSEMBLY, "OIL LEAKAGE" |

## OIL LEAKAGE

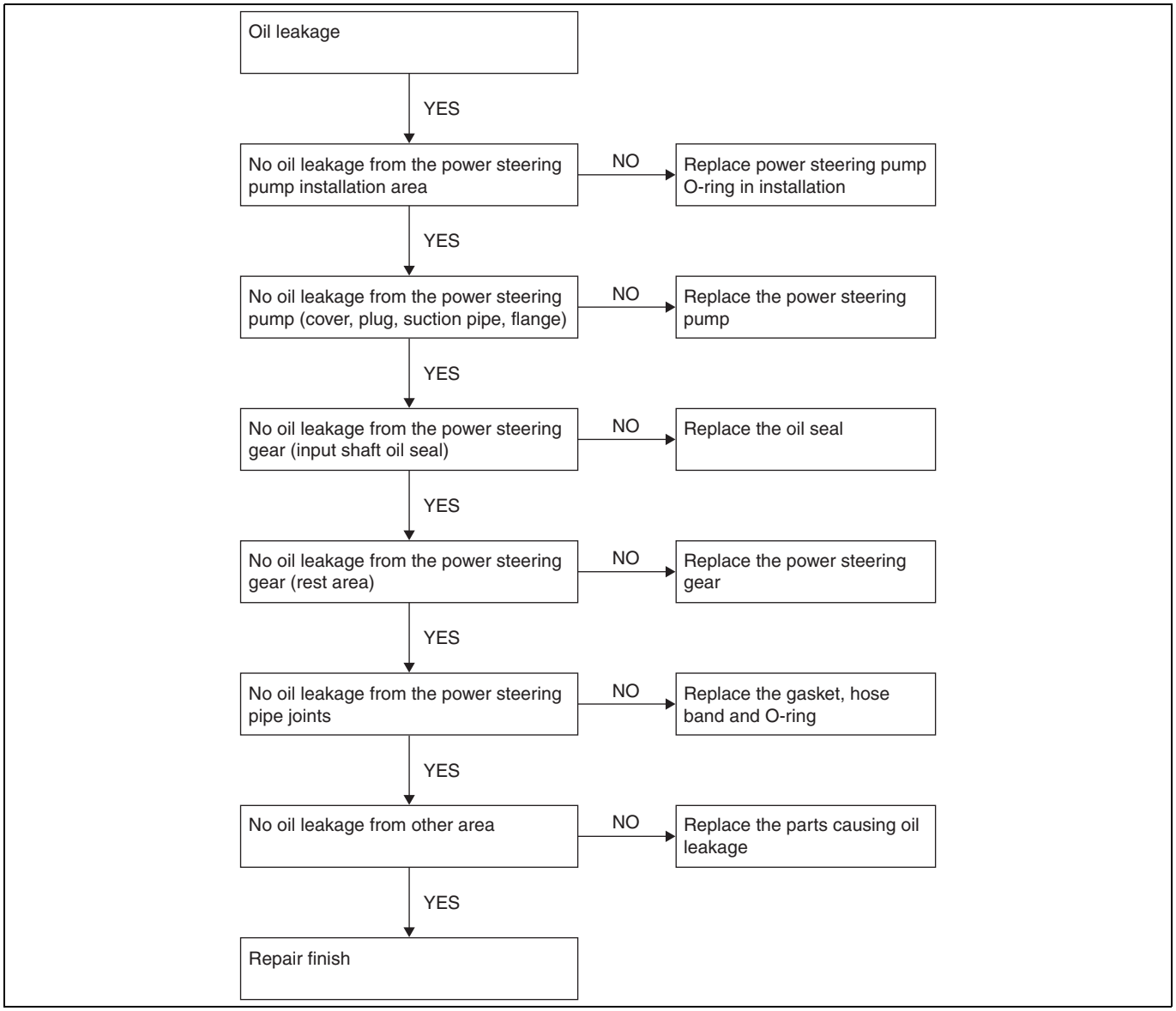


SAPH16ZZZ0100009

# BRAKE EQUIPMENT (MODELS WITH FULL AIR BRAKE)

## SERVICE BRAKE ASSEMBLY

EN01H16ZZZ010F01016001

| Symptom | Possible cause | Action |
|---|---|---|
| **Not enough braking (Wheel brake and drum)** | Lining is wet with grease or oil | Replace lining. |
| | Improper contact of drum and lining | Correct. |
| | Improper lining material or hardening lining | Replace lining. |
| | Deformation or hardening of drum | Correct or replace. |
| | Excessively worn lining | Replace. |
| | Improper adjustment of shoe clearance | Check automatic slack adjuster. |
| **Check automatic slack adjuster. Not enough braking (Control system)** | Leakage of compressed air from brake system | Tighten further or replace gasket. |
| | Lack of compressed air pressure due to excessive use | Use properly. |
| | Improper operation of air compressor | Repair or replace. |
| | Improper operation of brake valve | Repair or replace. |
| | Improper operation of relay valve | Repair or replace. |
| | Improper operation of spring brake control valve | Repair or replace. |
| | Improper operation of spring brake chamber | Repair or replace. |
| | Clogging of brake system | Replace pipe, hose, etc. |
| **Unequal or unstable braking (Wheel brake and drum)** | Lining is wet with grease or oil | Replace lining. |
| | Defective lining material (Improper combination) | Replace lining. |
| | Non-uniform lining contact | Correct. |
| | Non-uniform brake chamber rod stroke | Check automatic slack adjuster. |
| | Distorted drums | Correct or replace. |
| | Excessive abrasion of drums | Correct or replace. |
| **Unequal or unstable braking (Control system)** | Clogging of brake system | Replace pipe, hose, etc. |
| **Unequal or unstable braking (Others)** | Loose hub bearing | Adjust or replace bearing. |
| | Improper or unequal pneumatic pressure of tire | Adjust to proper pneumatic pressure. |
| **Brake drags or does not release (Wheel brake and drum)** | Improper adjustment of shoe clearance | Check automatic slack adjuster. |
| | Defective shoe return spring | Replace. |

| Symptom | Possible cause | Action |
|---|---|---|
| **Brake drags or does not release (Control system)** | Lack of pedal play | Adjust. |
| | Improper return of brake pedal | Repair or replace. |
| | Improper operation of brake valve | Repair or replace. |
| | Improper operation of relay valve | Repair or replace. |
| | Leakage of air pressure from brake system | Tighten connections further or replace gaskets. |
| | Improper operation of spring brake control valve | Repair or replace. |
| | Improper operation of spring brake chamber | Repair or replace. |
| | Improper operation of air compressor | Repair or replace. |
| | Clogging of brake system | Replace pipe, hose, etc. |
| **Brake squeal (Wheel brake and drum)** | Improper lining material or glazed lining | Replace lining. |
| | Loose lining rivet | Replace or tighten the rivet further. |
| | Lining rivet in contact with drum | Replace lining and rivet. |
| | Deformation or wear of drum | Repair or replace. |
| | Intrusion of foreign matter between drum and lining | Clean the surface of lining or replace. |
| **Brake squeal (Others)** | Loose hub bearing | Adjust or replace bearing. |

# SERVICE BRAKE (HYDRAULIC BRAKE)

## WHEEL BRAKE (TYPE: 4 PISTON)

EN01H16ZZZ010F01017001

| Symptom | Possible cause | Action |
|---|---|---|
| **Excessive Pedal Effort** | Pads worn below minimum thickness | Install new pads. |
| | Faded, overheated condition, glazed pads, blued or heat-checked rotors | Replace the rotor and/or reface pads if sufficient lining remains. |
| | Grease, oil and/or brake fluid on linings | Install new pads in the axle sets. |
| | Seized or frozen pistons | Disassemble the calipers and free pistons, or replace the caliper. |
| **Pistons, or replace the caliper. Pedal Pulsation (Brake Roughness or Chatter)** | Excessive lateral runout of brake rotor | Check with a dial indicator. Install a new rotor if the runout exceeds the maximum specified. |
| | Excessive out-of-parallelism of brake rotor | Check the parallelism or rotor thickness variation with a micrometer. Resurface the rotor or install a new rotor if the parallelism exceeds the maximum allowed. |
| | Loose or worn steering or suspension parts | Replace the parts and realign. |
| | Excessive front bearing clearance | Readjust the bearing to specifications. |
| **Vehicle Pulls to One Side** | Brake fluid, oil and/or grease on linings | Install new pads in the axle sets. |
| | Unmatched linings, uneven lining wear, distorted pads | Install new pads in the axle sets. |
| | Rough rotor surfaces on one rotor | Resurface or replace the rotor in the axle sets. |
| | Seized or frozen pistons | Disassemble the caliper and repair or replace. |
| | Loose caliper mounting bolts | Tighten to specifications. |
| | Uneven tire pressure, tread wear or size, right to left | Equalize to the recommended pressures. Install the correct size tires with good tread. |
| | Excessive rotor parallelism or runout | Resurface or replace the rotor. |
| | Restricted hose or line | Examine the hoses and lines, and replace as necessary. |
| | Front end out of alignment | Reset the alignment. |
| **Leaky Caliper** | Cylinder bore surface scored or corroded | Disassemble the calipers, clean the bore and replace the seals and boots. |
| | Caliper piston seal damaged or worn | Disassemble the calipers and install new seals and boots. |
| | Caliper piston damaged | Replace the piston. |

| Symptom | Possible cause | Action |
|---|---|---|
| **No Braking Effect or Excessive Pedal Travel** | Reservoir fluid level low | Check for causes of fluid leak, repair as required and refill the reservoir. Bleed the system as needed. |
| | Air in the hydraulic system | Bleed the system. |
| | Bleed screw loose or open | Bleed the system and tighten the bleed screw. |
| | Caliper piston seal damaged | Disassemble the caliper and replace the piston seals. Replace the piston if it is damaged. |
| | Excessive rotor runout or bent rotor | Check the rotor with a dial indicator. Install a new rotor if the runout exceeds the maximum specified. |
| | Worn or excessively loose wheel bearings | Adjust or replace the bearings as needed. |
| | Low quality brake fluid | Drain and clean the system. Replace with the recommended brake fluid. |
| | Weak brake hose that expands under pressure | Replace the hoses. |
| **Brake Noise (Chatter)** | Excessive lateral runout of rotor | Check the runout with a dial indicator. Install a new rotor if the runout exceeds the maximum specified. |
| | Lack of rotor parallelism | Check the parallelism with a micrometer. Resurface or install a new rotor as required. |
| | Loose wheel bearing | Readjust the bearing to the specified torque. |
| **Brake Noise (Scraping)** | Rust or mud build-up on edges of rotor and on caliper housing | Clean or replace as necessary. |
| | Worn pad or pad installed backward | Replace the pads in the axle sets only with the friction surface against the rotor. |
| | Incorrect caliper alignment permitting rotor to scrape on housing | Correct the alignment. |
| **Brake Noise (Groan)** | Pressure on the brake pedal too light | Slightly increase the pedal effort to eliminate the noise. |
| **Brake Noise (Rattle)** | Excessive clearance between the shoe and caliper | Install new pads. |
| | Pad retainer spring missing or not correctly positioned | Install a new pad retainer spring or position it correctly. |
| **Brake Noise (Squeal)** | Glazed pads | Resurface or replace the pads in the axle sets only. |
| | Weak pad retainer spring | Install a new pad retainer spring. |
| | Pad wear indicator contacting rotor | Install new pads in the axle sets only. |
| | Foreign material embedded in linings | Replace the pads in the axle sets only. |

# SERVICE BRAKE (FULL AIR BRAKE)

## AIR DRYER AND RESERVOIR SYSTEM (MODEL: BENDIX AD-IS)

EN01H16ZZZ010F01018001

| Symptom | Possible cause | Action |
|---|---|---|
| **<1>**<br>**Dryer is constantly "cycling" or purging** | <A><br>Excessive system leakage | <A><br>Test for excessive system leakage.<br>Allowable leakage observed at dash gauge:<br>Single vehicle - 1 psi/minute.<br>Tractor trailer - 3 psi/minute.<br>Using soap solution, test vehicle for leakage at fittings, drain valves and system valves. Repair or replace as necessary. |
| | <B><br>Defective delivery check valve. | <B><br>Build system pressure to governor cut-out. Wait 1 minute for completion of purge cycle. Using soap solution at exhaust of purge valve, leakage should not exceed a 1" bubble in less than 5 seconds. If a rapid loss of pressure is found, the following procedure will determine if the delivery check valve is malfunctioning:<br>Build system pressure to governor cut-out and allow a full minute for the normal dryer purge cycle to empty the purge reservoir. Switch off the engine and "fan" the brakes so that the system pressure reaches governor cut-in. The purge valve will return to its closed position. The purge reservoir has a drain valve which is opened by moving the center lever away from its closed position. Open the drain valve and wait 10 seconds to allow any residual purge pressure to be released. Release the lever, closing the drain valve. Carefully remove the air dryer cartridge using a strap wrench and then test for air leaking through the center of the threaded boss by applying a soap solution to the boss.<br>Replace the delivery check valve if there is excessive leakage (exceeding a 1" bubble in 5 seconds). Regrease the seal on the air dryer cartridge before reinstalling. Be sure the drain valve on the purge reservoir is not leaking before restoring vehicle to service. |
| | <C><br>Defective governor. | <C><br>Check governor at both "cut-in" and "cut-out" position for (i) proper pressures and (ii) excessive leakage at fittings and exhaust. |
| | <D><br>Compressor unloader mechanism leaking excessively. | <D><br>Remove air strainer or fitting from compressor inlet cavity. With compressor unloaded, check for unloader piston leakage. Slight leakage is permissible. |

| Symptom | Possible cause | Action |
|---|---|---|
| **<2>**<br>**Water in vehicle reservoirs.** | <A><br>Maximum air dryer inlet temperature is exceeded due to improper discharge line length. | <A><br>Check for excessive carbon build up in compressor discharge line. Replace if required. Make certain that discharge line length is at least 6 ft. Increase discharge line length and/or diameter to reduce air dryer inlet temperature. |
| | <B><br>Air system charged from outside air source (outside air not passing through air dryer). | <B><br>If system must have outside air fill provision, outside air should pass through air dryer. |
| | <C><br>Excessive air usage - Air dryer not compatible with vehicle air system requirement (Improper air dryer/vehicle application). | <C><br>Refer to Bendix Advanced Troubleshooting Guide for Air Brake Compressors (BW1971) for proper application of the AD-IS® air dryer and reservoir system. An extended purge model (AD-ISEP) is available for many higher air usage vehicles, such as city buses and construction vehicles.<br>If the vehicle is equipped with high air usage accessories such as trailer pump-off systems or central tire inflation, the air for these accessories must bypass the dryer reservoir system. |
| | <D><br>Desiccant requires replacement. | <D><br>Replace desiccant cartridge assembly. |
| | <E><br>Air by-passes desiccant cartridge assembly. | <E><br>If vehicle uses Holset compressor, inspect feedback check valve for proper installation and operation. |
| | <F><br>Air dryer not purging. | <F><br>Refer to Symptom 6. |
| | <G><br>Purge (air exhaust) time insufficient due to excessive system leakage. | <G><br>Refer to Symptom 1. |
| **<3>**<br>**Safety valve on air dryer "popping off" or exhausting air.** | <A><br>Defective AD-IS® air dryer and reservoir system delivery check valve. | <A><br>Test to determine if air is passing through check valve. Repair or replace. Refer to Symptom 1, Remedy B. |
| | <B><br>Safety valve setting too low (<150 p.s.i.) | <B><br>Replace safety valve. |
| | <C><br>System pressure too high (>135 p.s.i.) | <C><br>Test with accurate gauge. Replace governor if necessary. |
| | <D><br>Excessive pressure pulsations from compressor. (Typical single cylinder type). | <D><br>Increase volume in discharge line. This can be accomplished by adding a 90 cubic inch (or larger) reservoir between the compressor and the AD-IS® air dryer and reservoir system. |

| Symptom | Possible cause | Action |
|---|---|---|
| **<4>**<br>**Constant exhaust of air at air dryer purge valve exhaust or unable to build system pressure. (Charge mode.)** | <A><br>Air dryer purge valve leaking excessively. | <A><br>With compressor loaded, apply soap solution on purge valve exhaust, to test for excessive leakage. Repair or replace purge valve as necessary. Refer to Technical Bulletin TCH-008-040. |
| | <B><br>Purge valve frozen open - faulty heater and thermostat, wiring, blown fuse. | <B><br>Refer to paragraph 5 of Operation and Leakage Tests for heater and thermostat test. |
| | <C><br>Defective AD-IS® air dryer delivery check valve. | <C><br>Refer to Symptom 1, Remedy B. |
| | <D><br>Leaking Turbo Cut-Off valve. | <D><br>Repair or replace purge valve assembly. |
| | <E><br>Defective governor. | <E><br>Check governor at both "cut-in" and "cut-out" position for (i) proper pressures and (ii) excessive leakage at fittings and exhaust. |
| | <F><br>Leaking purge valve control piston quad-ring. | <F><br>Repair or replace purge valve assembly. |
| **<5>**<br>**Cannot build system air pressure.** | <A><br>Kinked or blocked (plugged) discharge line. | <A><br>Check to determine if air passes through discharge line. Check for kinks, bends, excessive carbon deposits, or ice blockage. |
| | <B><br>Excessive bends in discharge line (water collects and freezes). | <B><br>Discharge line should be constantly sloping from compressor to air dryer with as few bends as possible. |
| | <C><br>Pressure protection valve(s) in air dryer will not open. | <C><br>Replace air dryer (pressure protection valves are not serviceable). |
| | <D><br>Refer to Symptom 4. | <D><br>Refer to Symptom 4, Remedy A. |
| | <E><br>Refer to Symptom 7. | <E><br>Refer to Symptom 7, Remedies A and B. |
| **<6>**<br>**Air dryer does not purge or exhaust air.** | <A><br>Faulty air dryer purge valve. | <A><br>After determining air reaches purge valve control port by installing a T-fitting with a pressure gauge into the governor unloader port, repair purge valve if necessary. |
| | <B><br>See Causes B, E, and F for Symptom #4. | <B><br>Refer to Symptom 4, Remedies B, E, and F. Also refer to Symptom 1, Remedy B. |
| **<7>**<br>**Desiccant material being expelled from air dryer purge valve exhaust (may look like whitish liquid or paste or small beads.)** | <A><br>Faulty dryer cartridge. | <A><br>Replace AD-IS® air dryer cartridge and/or AD-IS® air dryer. |
| | <B><br>Excessive dryer vibration. | <B><br>Check the AD-IS® air dryer mounting for looseness or damage. Repair mounting and replace cartridge. |

| Symptom | Possible cause | Action |
|---|---|---|
| **<8> Unsatisfactory desiccant life.** | <A> Excessive system leakage. | <A> Refer to Symptom 1, Remedy A. |
| | <B> Wrong vehicle application for AD-IS® air dryer. | <B> Refer to Symptom 2, Remedy C. |
| | <C> Compressor passing excessive oil. | <C> Check for proper compressor installation; if symptoms persist, replace compressor. Refer to Bendix Advanced Troubleshooting Guide for Air Brake Compressor (BW1971). |
| **<9> "Pinging" noise excessive during compressor loaded cycle.** | <A> Single cylinder compressor with high pulse cycles. | <A> A slight "pinging" sound may be heard during system build up when a single cylinder compressor is used. If this sound is deemed objectionable, it can be reduced substantially by increasing the discharge line volume. This can be accomplished by adding a 90 cubic inch (or larger) reservoir between the compressor and the AD-IS® air dryer and reservoir system. |
| **<10> The air dryer purge piston cycles rapidly in the compressor unloaded (non compressing) mode.** | <A> Compressor fails to "unload". | <A> Check air hose from governor to compressor for a missing, kinked or restricted line. Install or repair air hose. Repair or replace compressor unloader. |

# EXHAUST BRAKE

## EXHAUST BRAKE SYSTEM

EN01H16ZZZ010F01019001

| Symptom | Possible cause | Action |
|---|---|---|
| **Switch does not work** | Defective contacts | Check and correct. |
| | Open circuit in harness | Check and correct. |
| **Valve does not close** | Valve clogged with carbon | Remove carbon. |
| | Burnt shaft | Check and correct. |

# PARKING BRAKE (BOSCH 12)

## PARKING BRAKE ASSEMBLY

EN01H16ZZZ010F01020001

| Symptom | Possible cause | Action |
|---|---|---|
| **Light force or lack of resistance when applying brake lever (on manual apply systems)** | Shoe cage under-adjusted(*1) | Adjust shoes per cage adjustment procedure. |
| | Worn or deformed actuation components (lever, cam lugs shoe ends) | Inspect and replace per Anchor Screw, Lever and Cam. Replacement procedure or Shoe Replacement procedure |
| | Maladjusted control linkage | Readjust. |
| **Heavy force or excessive resistance when applying when applying brake lever (on manual apply system)** | Over adjusted brake | Adjust brake cage clearance diameter. |
| | Apply system over adjusted. | Adjust or repair per manufacturer's recommended procedures. |
| **Brake does not release.** | Internal damage to brake. | Inspect and replace damaged components. |
| | Apply cable bound up. | Check cable for corrosion, binding, kinks, or damage. |
| | The parking brake lever in the cab is binding | Check the parking brake lever assembly for damage or corrosion. Repair or replace as needed. |
| **Brake does not hold vehicle on hill.** | Grease, oil or other foreign material on or embedded in shoe linings. | Replace shoes and clean drum(*2). |
| | Damaged or incorrect shoes. | Replace with correct shoes. |
| | Worn out lining (metal shoe run contacting drum) | Replace shoes and resurface or replace drum as necessary. |
| | Excessive drum runout. | Resurface or replace drum per manufacturer's recommended procedure. |
| | Shoe cage under-adjusted. | Adjust shoes per primary (or alternate) Shoe Cage Adjustment procedure. |
| | Worn or deformed actuation components (lever, cam lugs, shoe). | Inspect and replace per Anchor, Screw, Lever and Cam. Replacement procedure. |

*1: Inspect adjuster components to see if any are damaged or jammed.
*2: Inspect the rear pinion seal for leakage that can contaminate the park brake system part. Repair as necessary.

# STEERING EQUIPMENT

## STEERING SYSTEM

EN01H16ZZZ010F01021001

| Symptom | Possible cause | Action |
|---|---|---|
| **Steering wheel shimmy** | Steering system linkage is loose. | Tighten properly. |
| | Too much wear or play in steering linkage (spline and ball joints). | Replace parts. |
| | Other front axle problems. | Refer to the chapter "**FRONT AXLE**". |
| | Power steering gear badly adjusted. | Refer to the chapter "**POWER STEERING**". |
| | The wheels are out of balance. | Balance the wheels. |
| | Wheel wobbles. | Replace wheel. |
| | Tire air pressure is not uniform or sufficient. | Adjust tire pressure. |
| | Distorted disc wheel. | Replace parts. |

| Symptom | Trouble shooting and repair |
|---|---|
| **Hard steering or poor return of steering wheel to center** | **Refer to TROUBLESHOOTING, STEERING EQUIPMENT, STEERING SYSTEM, "STEERING IS HEAVY"** |
| | **Refer to TROUBLESHOOTING, STEERING EQUIPMENT, STEERING SYSTEM, "STEERING RETURN IS RELUCTANT"** |
| **Abnormal noise** | **Refer to TROUBLESHOOTING, STEERING EQUIPMENT, STEERING SYSTEM, "ABNORMAL NOISE"** |

## STEERING IS HEAVY

**1. CHECK AND CONFIRM THE FOLLOWING POINTS AND TAKE COUNTERMEASURE.**

(1) Check the front tire pressure, and supply compressed air with the specified pressure if insufficient.
(2) Check the tire for abnormal wear and improper groove depth, if any problem found, replace the tire.
(3) Measure the front axle loading, if it exceeds the specified value, correct or empty the cargo.
(4) If frontward cargo causes the excessive front axle loading, correct it by reviewing the weight balance.
(5) If superstructure causes the excessive front axle loading, refurbish the superstructure to reduce loading.
(6) Check the power steering fluid level and replenish if insufficient.
In spite of the above check and countermeasure taken, if the troubles still remain, pursue the true cause with the following procedures, and repair the troubles.

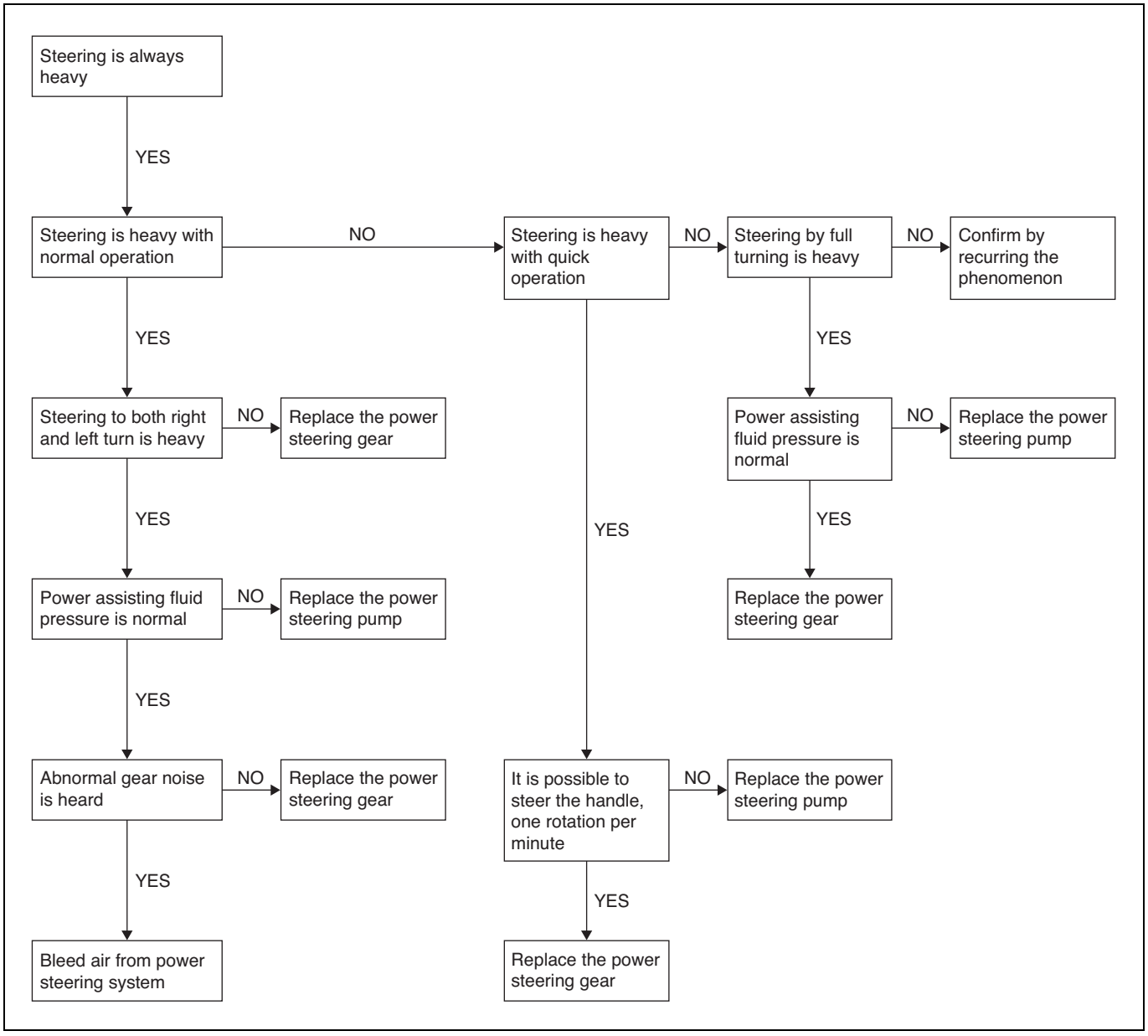


SAPH16ZZZ0100010

## STEERING RETURN IS RELUCTANT

**1. CHECK AND CONFIRM THE FOLLOWING POINTS AND TAKE COUNTERMEASURE.**

(1) Check the front tire pressure, and supply compressed air with the specified pressure if insufficient.
(2) Check the tire for abnormal wear and improper groove depth, if any problem found, replace the tire.
(3) Measure the front axle loading, if it exceeds the specified value, correct or empty the cargo.
(4) If frontward cargo causes the excessive front axle loading, correct it by reviewing the weight balance.
(5) If superstructure causes the excessive front axle loading, refurbish the superstructure to reduce loading.
(6) Check the power steering fluid level and replenish if insufficient.
In spite of the above check and countermeasure taken, if the troubles still remain, pursue the true cause with the following procedures, and repair the troubles.

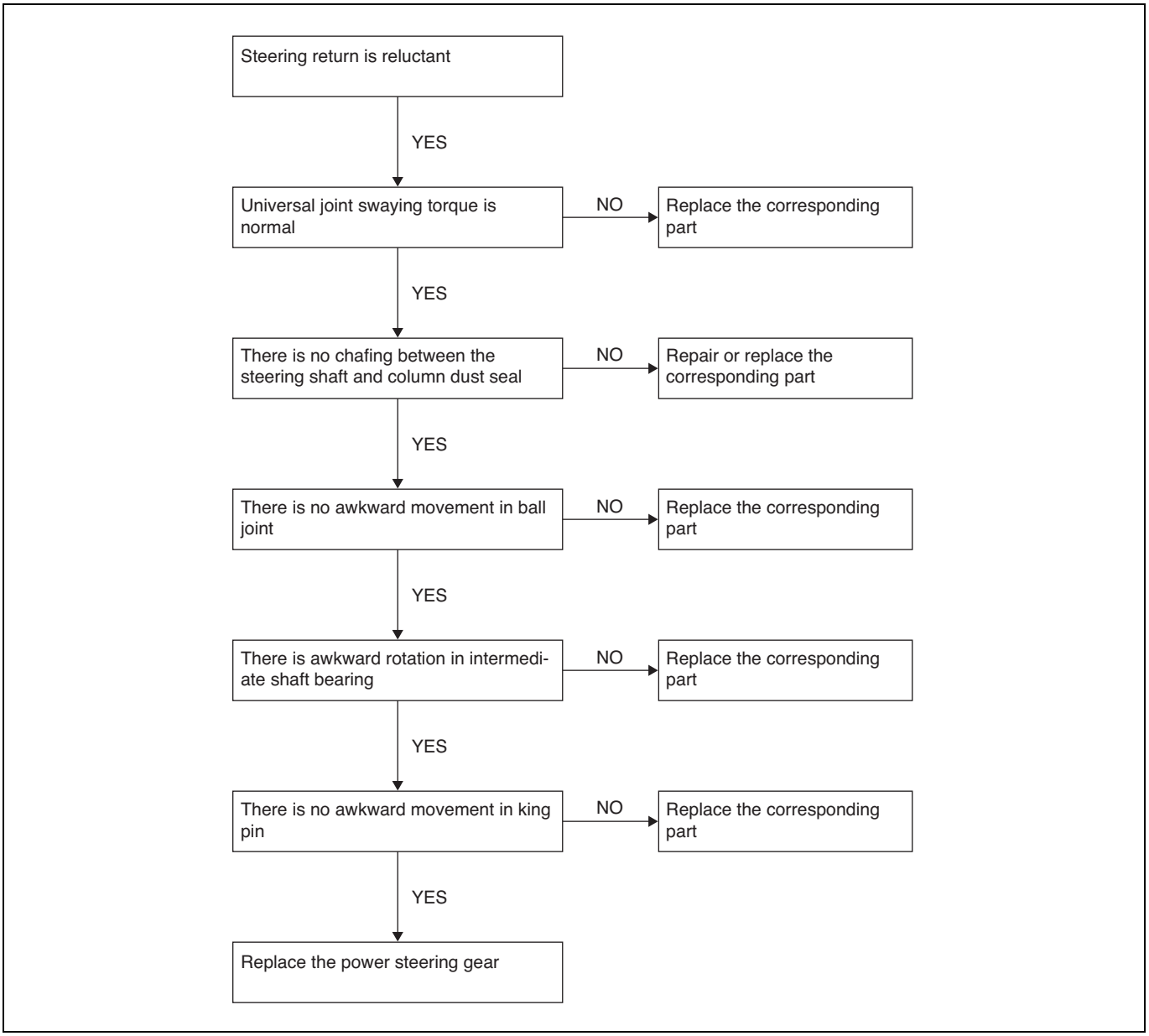


SAPH16ZZZ0100011

## ABNORMAL NOISE

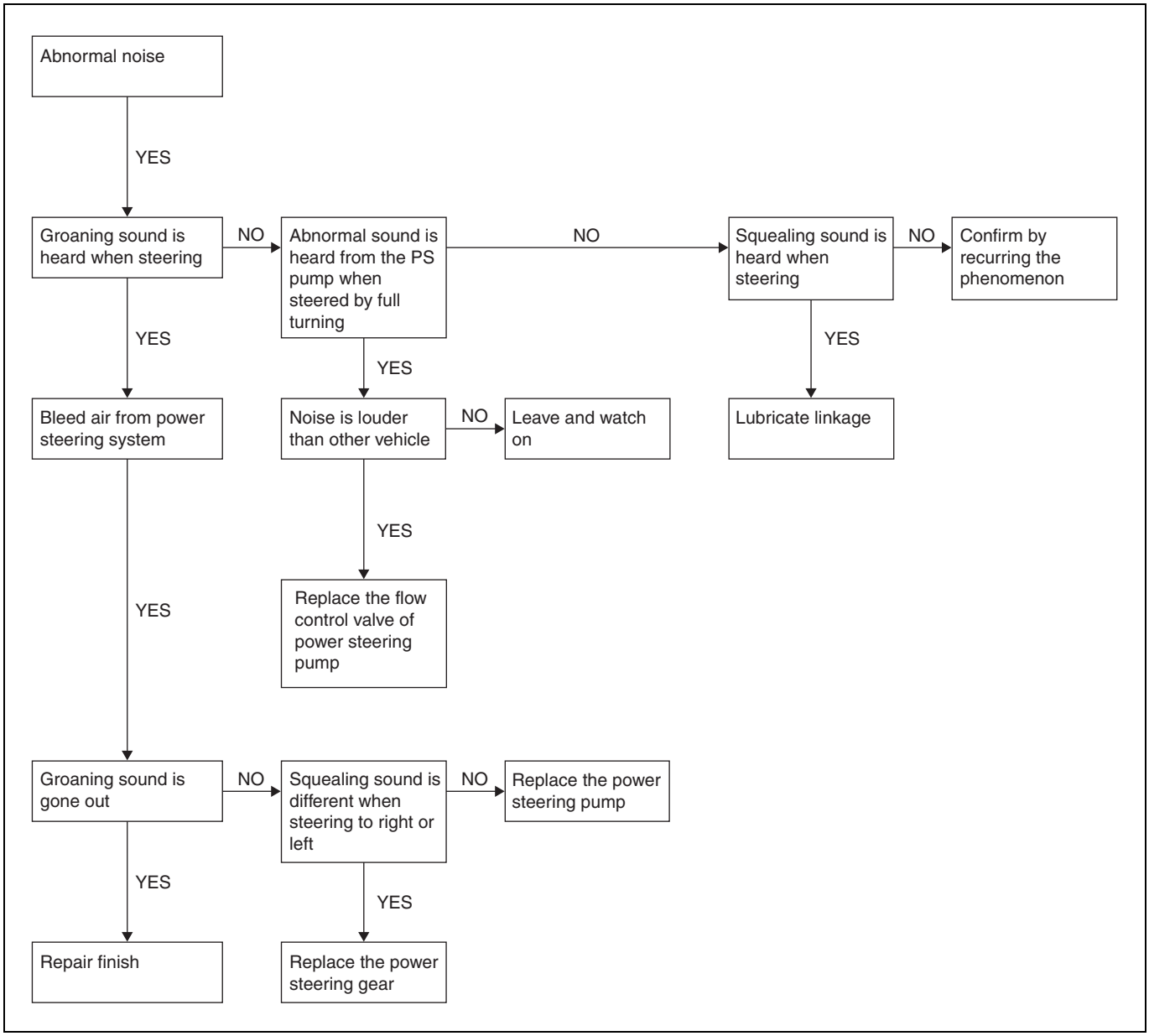


SAPH16ZZZ0100012

# FRONT AXLE (MFS)

## FRONT AXLE (MFS)

EN01H16ZZZ010F01022001

### FRONT NON-DRIVE STEER AXLE DIAGNOSTIC TABLE

| Condition | Cause | Correction |
|---|---|---|
| Tire wear out quickly or have uneven tire tread wear. | Tire have incorrect air pressure. | Place specified air pressure in tires. |
| | Tire out-of-balance. | Balance or replace tires. |
| | Incorrect tandem axle alignment. | Align tandem axles. |
| | Incorrect toe-in setting. | Adjust toe-in specified setting. |
| | Incorrect steering arm geometry. | Service steering system as necessary. |
| | Excessive wheel end play exists. | Readjust wheel bearing. |
| Vehicle is hard to steer. | Power steering system pressure low. | Repair power steering system. |
| | Steering gear linkage not assembled correctly. | Assemble steering gear correctly. |
| | Steering linkage needs lubrication. | Lubricate steering linkage. |
| | King pins binding. | Replace king pins. |
| | Incorrect steering arm geometry. | Service steering system as necessary. |
| | Caster out-of-adjustment. | Adjust caster as necessary. |
| | Tie rod ends hard to move. | Replace tie rod ends. |
| | Worn thrust bearing. | Replace thrust bearing. |
| Tie rod ends are worn and require replacement. | Tie rod ends require lubrication. | Lubricate ends of cross tube. Make sure lubrication schedule is followed. |
| | Severe operating conditions. | Increase frequency of inspection and lubrication intervals. |
| | Damaged boot on tie rod end. | Replace boot. |

SAPH16ZZZ0100013

| Condition | Cause | Correction |
|---|---|---|
| Bent or broken cross tube, tie rod end ball stud, steering arm or tie rod end. Component requires replacement. | Too much pressure in the power steering system, pressure exceeds vehicle manufacturer's specification. | Adjust power steering system to specified pressure. |
| | Power steering system cut-off pressure, out of adjustment. | Adjust power steering system to specified pressure. |
| | Vehicle operated under severe conditions. | Verify that vehicle is operated correctly. |
| | Add-on type of power steering system not installed correctly. | Correctly install add-on power steering system. |
| | Steering gear overtravel poppets incorrectly set or malfunctioning. | Check for correct operation or adjust overtravel of poppets to vehicle manufacturer's specifications. |
| | Axle stops incorrectly set. | Set axle stops to vehicle manufacturer's specification. |
| Worn or broken steering ball stud. | Drag link fasteners tightened higher than vehicle manufacturer specified. | Tighten drag link fasteners to vehicle manufacturer's specified torque. |
| | Lack of lubrication or incorrect lubricant. | Lubricate linkage with specified lubricant. |
| | Power steering stops out-of-adjustment. | Adjust stops to specified dimension. |
| Worn king pins and king pin bushings. | Worn or missing seals and gaskets. | Replace seals and gaskets. |
| | Incorrect lubricant. | Lubricate axle with specified lubricant. |
| | Axle not lubricated at scheduled frequency. | Lubricate axle at scheduled frequency. |
| | Incorrect lubrication procedures. | Use correct lubrication procedures. |
| | Lubrication schedule does not match operating conditions. | Change lubrication schedule to match operating conditions. |
| Vibration or shimmy of front axle during operation. | Caster out-of-adjustment. | Adjust caster. |
| | Wheels and/or tires out-of-balance. | Balance or replace wheels and/or tires. |
| | Worn shock absorbers. | Replace shock absorbers. |

SAPH16ZZZ0100014

# REAR AXLE

## REAR AXLE

EN01H16ZZZ010F01023001

### HAZARD ALERT MESSAGES

Read and observe all Warning and Caution hazard alert messages in this publication. They provide information that can help prevent serious personal injury, damage to components, or both.

⚠ **WARNING**

**To prevent serious eye injury, always wear safe eye protection when you perform vehicle maintenance or service.**

**1. TROUBLESHOOTING DIAGNOSTIC CHART**

Significant wheel end component wear may enable the ABS warning light and cause a fault code to be set. Slow return of the steering wheel to its neutral position following completion of a turn may be another indication of wheel end component wear.

**Wheel-End Component Troubleshooting**

| Condition | Cause | Correction |
|---|---|---|
| Tires wear out quickly or have uneven tire tread wear. | Tires have incorrect air pressure. | Place the specified air pressure in the tires. |
| | Tires are out-of-balance. | Balance or replace the tires. |
| | Tandem axle alignment is incorrect. | Align the tandem axles. |
| | Toe-in setting is incorrect. | Adjust the toe-in to the specified setting. |
| | Steering arm geometry is incorrect. | Service the steering system as necessary. |
| | Wheel end play is excessive. | Readjust the wheel bearings. |

SAPH16ZZZ0100015

# WHEEL AND TIRE

## WHEEL AND TIRE

EN01H16ZZZ010F01024001

| Symptom | Possible cause | Action |
|---|---|---|
| **Excessive wear on edges of tread** | Under inflated tires | Properly inflate with the recommended pressure. |
| | Vehicle overloading | Correct as required by Factory spec. |
| | High speed cornering | Correct as required by Factory spec. |
| | Incorrect wheel alignment | Set to the correct specifications. |
| **Tires show excessive wear in center of tread** | Tires overinflated | Properly inflate with the recommended pressure. |
| **Excessive tire wear** | Improper tire pressure | Properly inflate with the recommended pressure. |
| | Incorrect tire wheel usage | Install the correct tire wheel combination. |
| | Bent wheel | Repair or replace. |
| | Front end out of alignment | Align front end. |
| | Loose, worn or damaged steering linkage, joints, suspension components, bushing or ball joints | Inspect, repair or replace as required |
| **Wheel hopping (vehicle vibration and rough steering)(Disc wheels)** | Rocks or debris wedged between dual disc wheels | Remove the rocks and the debris. |
| | Out-of-balance tire and/or hub and drum | Determine the out-of-balance component and balance or replace. |
| **Wheel hopping (vehicle vibration and rough steering) (Vehicle)** | Loose or worn drive line or suspension | Identify the location of vibration carefully. Then repair or replace the loose or worn parts. (Refer to PROPELLER SHAFT for vehicle vibration.) |
| **Wobbling (vehicle vibration and rough steering) (Disc wheels)** | Bent or distorted due to the overloading or improper handling | Replace the wheel. |
| | Loose mountings, damaged studs, wheel nuts, enlarged stud holes, worn or broken hub face, or foreign material on mounting surfaces | Replace worn or damaged parts. Clean mounting surfaces. |
| **Wobbling (vehicle vibration and rough steering) (Vehicle)** | Improper alignment | Have vehicle aligned. |
| | Loose, worn or broken suspension parts | Repair or replace. |
| **Cracked or broken wheel discs (cracks develop in the wheel disc from hand hole to hand hole, from hand hole to rim, or from hand hole to stud hole.)** | Metal fatigue resulting from overloading | Replace wheel. |

| Symptom | Possible cause | Action |
|---|---|---|
| **Damaged wheel bolt holes (wheel bolt holes become worn, elongated or deformed, metal builds up around wheel bolt hole edges, cracks develop from wheel bolt hole to wheel bolt hole.)** | Loose wheel mounting | • Replace wheel and check the installation of correct wheel bolt and nuts.<br>• Check the cracked or broken wheel bolt-replace.<br>• Check the worn hub face-replace.<br>• Check the broken or cracked hub replace.<br>• Clean mounting surfaces (Re-torque the wheel nuts periodically.)<br>• Rust streaks fanning out from wheel bolts holes: indicates that the wheel nuts are or have been loose. |
| **Tire slippage on rim (Disc wheels)** | Improper storage or operating conditions | Correct as required. |
| | Poor maintenance | Follow the proper maintenance procedures. |
| | Rust, corrosion or bead seating | Correct as required. |
| | Loss of pressure | Follow the proper maintenance procedures. |
| **Tire mounting difficulties (Wheel rims)** | Mismatched tire and rim sizes | Correct as required. |
| | Defective or mismatched rings for the rim | Correct as required. |
| | Tires overinflated | Properly inflate with the recommended pressure. |
| | Corrosion and dirt | Correct as required. |
| **Loose inner wheel** | Excessive wheel bolt standout from the mounting face of hub allowing the wheel nut to bottom out | Replace with the proper length wheel bolt. |
| | Improper torque | Follow the recommended torque procedure. |
| | Wrong inner nut | Use correct inner nuts. |
| **Broken wheel bolts** | Loose wheel nuts | Replace the wheel bolt and follow the proper torque procedures. |
| | Overloading | Replace the wheel bolt. |
| **Stripped threads** | Excessive clamp load | Replace wheel bolt and follow the proper torque procedures. |
| **Rust streaks from wheel bolt holes** | Loose wheel nuts | Check complete assembly, replace damaged parts and follow the proper torque procedures. |
| **Damaged inner or outer wheel nuts** | Loose wheel assembly | Replace wheel nuts. Check the proper torque procedures. |
| **Frozen inner or outer wheel nuts** | Corrosion or damage | Replace wheel nuts and wheel bolts. |

# SUSPENSION

## LEAF SUSPENSION ASSEMBLY

EN01H16ZZZ010F01025001

| Symptom | Possible cause | Action |
|---|---|---|
| **Rough ride** | Broken leaves | Replace the leaves. Check the load capacity rating. |
| | Cracked or damaged | Replace the leaves. Check the load capacity rating. |
| | Overloading | Decrease the load. |
| **Heavy sway** | Inoperative shock absorber | Replace the shock absorber. |
| **Leaves broken at the center bolt hole** | Loosen U-bolts | Replace the leaves and tighten the U-bolts to specified torque. |
| **Squeaking of the leaves** | Friction between the leaves | Apply chassis grease between leaves. |

## AIR SUSPENSION ASSEMBLY

EN01H16ZZZ010F01025002

| Symptom | Possible cause | Action |
|---|---|---|
| **Abnormal sound occurs from the spring while driving.** | Eccentric wear of the shock absorber fitting pin | Replace the pin and/or rubber bushing. |
| **Uncomfortably (Rolling and pitching)** | Deflection and damage of the bushings of the main support member or the transverse rod | Replace the main support member or the bushing of the transverse rod. |
| | Faulty of the shock absorber | Replace the shock absorber. |
| | Faulty of the height control valve | Repair the height control valve. |
| **Vibration of the steering wheel, and the car shake** | Deflection of the bushing in the main support member or the transverse rod | Replace the main support member or the bushing of the transverse rod. |
| | Looseness of the transverse rod bracket bolt | Replace the lock nut and tighten with the specified torque. |
| **Vehicle height is not adjusted correctly** | Faulty of the height control | Repair the parts. |

# CHASSIS FRAME

## CHASSIS FRAME

EN01H16ZZZ010F01026001

| Symptom | Possible cause | Action |
|---|---|---|
| **Frame distortion (Vehicle inclination)** | Flattening or breakage of springs on one side | Replace spring |
| | Incorrect mounting (Attachment of heavy weight on one side of the vehicle) | Correct mounting |
| **Bent frame** | Overloading or concentrated weight on rear end of frame | • Correct load<br>• Correct with frame correction device |
| **Frame cracking or rivets breaking** | Wrong body mounting | Correct mounting |
| | Overloading | • Improvement of the usage<br>• Reinforce with stiffener |

# CAB

## AIR SUSPENSION DUMP SYSTEM

| Symptom | Possible cause | Action |
|---|---|---|
| **The vehicle height does not reach dump position** | Defective dump valve | Dump valve replacement |
| | Defective air suspension dump relay 3 – PKB SW (hydro-brake vehicles) | Wiring check |
| **The vehicle height does not return from dump position** | Defective air suspension dump relay 3 | Replacement of the air suspension dump relay 3 |
| **The vehicle height cannot be maintained** | Defective dump valve | Dump valve replacement |
| **The vehicle height does not change after return** | Defective air suspension dump relay | Replacement of the air suspension dump relay 3 |
| **The vehicle height returns from dump position when the starter switch is set to ON** | Defective ACC power supply – air suspension dump diode 2 | Replacement of air suspension diode 2, wiring check |
| | Defective IG power supply – air suspension dump diode 2 | Replacement of air suspension diode 2, wiring check |
| **Dump switch operation not effective** | Defective air suspension dump switch | Replacement of the air suspension dump switch |
| | Defective air suspension dump switch – dump valve wiring | Wiring check |
| | Defective IG power supply – air suspension dump relay 3 wiring | Wiring check |
| **Dump position possible even with parking brake OFF** | Defective air suspension dump relay 3 – air suspension dump relay 4 (full air brake vehicles) | Replacement of the air suspension dump relay 4, wiring check |
| **The meter indicator light does not light** | Defective IG power supply – indicator light – low-pressure switch | Meter replacement, wiring check |
| **The air suspension dump switch light does not light** | Defective IG power supply – air suspension dump switch lamp – low-pressure switch | Dump switch replacement, wiring check |

## CAB ASSEMBLY

### HOOD TILT

| Symptom | Possible cause | Action |
|---|---|---|
| **Hood does not tilt up.** | Hood mounting hook does not release. | Inspection of hood mounting hook. |
| | Oil damper does not release. | Inspection of oil damper mechanism. |
| | Damaged torsion bar | Replace torsion bar. |
| **Hood tilting is difficult.** | Tilt up force is weak. | Replace torsion bar. |
| **Hood does not lock to hood mounting member.** | Mounting hook does not operate. | Replace mounting hook. |
| | Hood mounting cushion is not correctly installed. | Correct installation of hood mounting. |

## DOOR

| Symptom | Possible cause | Action |
|---|---|---|
| **Door does not close properly.** | Door is not adjusted | Adjust door installation. |
| | Striker is not adjusted | Adjustment of shim for door lock striker |
| | Damaged door lock | Replace door lock. |
| **Door does not lock by inside lock knob.** | Deformation of rod | Replace rod. |
| | Rod is disconnected | Connect rod. |
| | Damaged door lock | Replace door lock. |
| **Door does not lock by key.** | Rod is disconnected | Connect rod. |
| | Damaged door lock | Replace door lock. |
| | Damaged lock cylinder | Replace lock cylinder. |
| **Door does not open by outside handle.** | Outside handle push rod is not adjusted. | Adjust push rod. |
| | Damaged door lock | Replace door lock. |
| **Door does not open by inside handle.** | Inside handle is not installed properly. | Install inside handle properly. |
| | Deformation of rod | Replace rod. |
| | Rod is disconnected. | Connect rod. |
| | Damaged door lock | Replace door lock. |
| **Inside handle does not return to its normal position.** | Interference between rods. | Replace rod. |
| | Inside handle is not installed properly. | Adjust inside handle. |
| | Return spring is damaged. | Replace inside handle. |
| **Door window goes down while driving.** | Window is not in the glass holder. | Repair. |
| | Regulator is damaged. | Replace regulator. |
| **Regulator makes abnormal noise while driving.** | Window sill weather strip is installed improperly. | Install properly or replace clips. |

## BLOWER

| Symptom | Possible cause | Action |
|---|---|---|
| **Malfunction of blower when power is ON.** | Blown fuse | Change fuse or check for short circuit. |
| | Malfunction in heater relay | Inspect relay. |
| | Malfunction of heater blower switch | Inspect power switch. |
| | Malfunction of register | Check register. |
| | Blower motor malfunction | Replace motor. |
| | Damaged electrical wiring or poor grounding | Repair as necessary. |

# AIR CONDITIONING SYSTEM

EN01H16ZZZ010F01027002

## FAULT DIAGNOSIS PROCEDURE

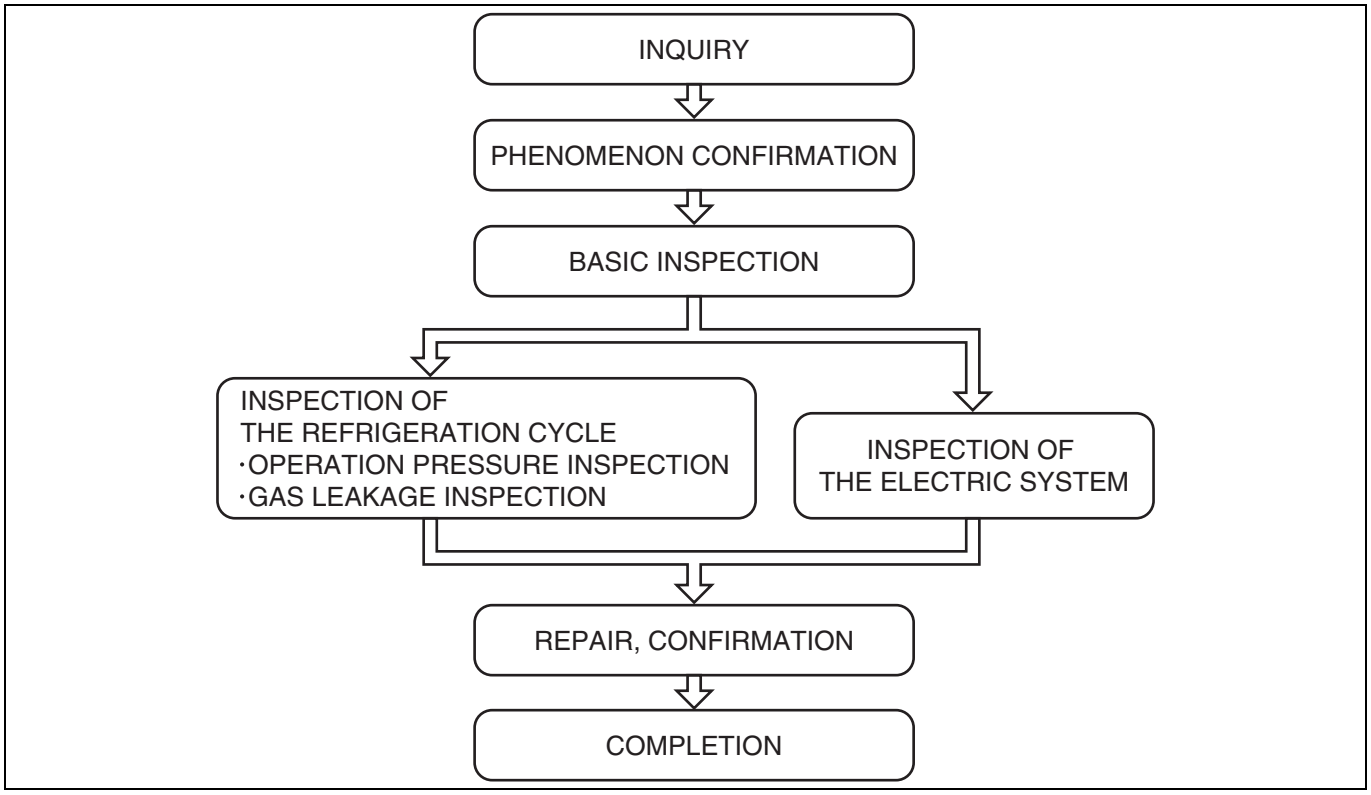


SAPH16ZZZ0100016

The diagram shows the basic procedure for fault diagnosis.

## BASIC INSPECTION

| Symptom | Possible cause | Action |
|---|---|---|
| **Abnormal noise from around the compressor** | Loosened mounting bolts of compressor or bracket | Retighten |
| | Broken discharge or suction valve Loosening of the connecting rod | Contact DENSO Service station for compressor repair or replacement. |
| | Insufficient compressor oil | Contact DENSO Service station and request oil quantity inspection and refilling. |
| **Oil leakage at connection parts or tightening parts of the refrigeration cycle.** | Gas leakage | Retighten. Replace the related parts. |
| **Abnormal noise from around the blower** | Foreign objects caught in the blower Insufficient blower tightening | Repair or replace the blower motor. |
| **Many air bubbles in the sight glass** | Insufficient refrigerant filling quantity | Contact DENSO Service station for refrigerant filling to a suitable quantity. |
| **No air bubbles visible in the sight glass and suction and discharge pressure both high** | Excessive refrigerant filling | Contact DENSO Service station for refrigerant bleeding to a suitable quantity (discharge into the atmosphere is prohibited). |
| **Insufficient V-belt tension** | — | V-belt retightening. If the V-belt has been worn thin, replace it by a new one. |
| **Condenser fins covered by mud or dust** | — | Wash off any mud or dust covering the condenser fins. |
| **Clogged air filter** | — | Clean the air filter. |
| **The control mechanism does not operate smoothly and accurately.** | — | Operate the levers and switches of the control panel and replace in case of abnormalities. Also inspect fuses and relays as required and replace them in case of abnormalities. |

## COMPRESSOR-RELATED

### ABNORMALLY HIGH DISCHARGE PRESSURE

| Symptom | Possible cause | Action |
|---|---|---|
| **Even when the condenser is cooled with water, no air bubbles can be seen in the sight glass.** | Excessive refrigerant filling | Contact DENSO Service station station for refrigerant bleeding to a suitable quantity (discharge into the atmosphere is prohibited). |
| **The pressure on the high-pressure side is abnormally high and immediately after the compressor is stopped, the pressure rapidly drops to approximately 2 kg/cm2.** | Air has entered into the refrigeration cycle. | Contact DENSO Service station for refrigerant bleeding to a suitable quantity (discharge into the atmosphere is prohibited), and refill refrigerant after sufficient vacuum drawing in the refrigeration cycle. |

## ABNORMALLY HIGH SUCTION PRESSURE

| Symptom | Possible cause | Action |
|---|---|---|
| **Abnormally cold around low-pressure hose and service valve on the low-pressure side** | Excessive opening of the expansion valve | Contact DENSO Service station and request repair or replacement of the expansion valve. |
| **The pressure on the high-pressure side is high, but when the condenser is cooled, the suction pressure drops.** | Excessive refrigerant filling | Contact DENSO Service station for refrigerant bleeding (discharge into the atmosphere is prohibited). |
| **When the compressor is stopped, the pressure immediately becomes the same on high-pressure side and low-pressure side.** | Gasket breakage, high-pressure valve breakage, or entry of foreign matter | Contact DENSO Service station for gasket replacement, high-pressure valve replacement, or removal of foreign matter. |

## ABNORMALLY LOW SUCTION PRESSURE

| Symptom | Possible cause | Action |
|---|---|---|
| **No dew becomes attached to the outlet of the expansion valve and the pressure on the low-pressure side is a negative pressure.** | Expansion valve freezing or defective expansion valve | Contact DENSO Service station and request replacement of the expansion valve. |
| **Many air bubbles pass through the sight glass and the condenser is not hot.** | Too little refrigerant. | Contact DENSO Service station for refrigerant filling to a suitable quantity. |
| **When the compressor is stopped, the pressure immediately becomes the same on high-pressure side and low-pressure side.** | Breakage of compressor discharge valve and/or suction valve, catching of foreign matter | Contact DENSO Service station for compressor repair or replacement. |

## ABNORMALLY LOW SUCTION PRESSURE

| Symptom | Possible cause | Action |
|---|---|---|
| **Many air bubbles can be seen in the sight glass and the condenser is not hot.** | Insufficient refrigerant filling | Contact DENSO Service station for refrigerant filling to a suitable quantity. |
| **No dew becomes attached to the outlet of the expansion valve and the low-pressure piping is not cold.** | Expansion valve freezing or defective expansion valve | Contact DENSO Service station and request replacement of the expansion valve. |
| **Low temperature of the discharge port, no air is blown out.** | There is frost on the evaporator. | Contact DENSO Service station for thermistor replacement and position confirmation. |
| **There is frost on the expansion valve.** | The expansion valve tends to become clogged. | Contact DENSO Service station for cleaning (moisture removal) or replacement. |
| **There is a temperature difference around receiver and drier, and in extreme cases, there is frost on the piping after the receiver strainer.** | Clogging of receiver and drier | Contact DENSO Service station for desiccant in the modulator and for replacement of receiver and drier. |

## DISCHARGE PRESSURE AND SUCTION PRESSURE BOTH HIGH

| Symptom | Possible cause | Action |
|---|---|---|
| **Much dust on the condenser fins** | Insufficient condenser cooling | Wash off the dust to improve air passage. |
| **No air bubbles pass through the sight glass** | Excessive refrigerant filling | Contact DENSO Service station for refrigerant bleeding to a suitable quantity (discharge into the atmosphere is prohibited). |
| **The surroundings of the service valve are cold compared to the evaporator.** | Clogging in the equipment and/or piping on the low-pressure side. | Contact DENSO Service station for repair or replacement. |
| **The temperature at the expansion valve inlet is low in comparison with the temperature around receiver and drier.** | Clogging in the piping on the high-pressure side. | Contact DENSO Service station for compressor repair or replacement. |

## GAS LEAKAGE

| Symptom | Possible cause | Action |
|---|---|---|
| **Notable dirt on the shaft seal part and decreasing gas** | Gas leakage from the shaft seal | Contact DENSO Service station for shaft seal replacement. |
| **Oil contamination on the bolt part** | Gas leakage from the respective tightening bolt part | Retighten |
| **Oil contamination on the gasket part** | Gas leakage from each gasket part | Contact DENSO Service station for gasket replacement. |
| **Leakage from broken parts** | Gas leakage from broken parts | Contact DENSO Service station for replacement of the broken parts. |

## NO ADSORPTION

| Symptom | Possible cause | Action |
|---|---|---|
| **The wiring relation is correct.** | Coil wire break | Contact DENSO Service station for replacement of the coil with a wire break. |
| **No adsorption even with cooler switch ON** | Wire break, wrong wiring, defective contact of wiring-related parts (ground, fuse) | Inspect the harness connectors and repair or replace in case of abnormalities. |
| | Defective contact or operation of switches (thermostat, relay, cooler switch) | Inspect the switch-related parts and repair or replace in case of abnormalities. |
| **Simultaneously with switch ON, the rotor moves and there is adsorption when it is pushed.** | Too large gap between rotor and stator | Contact DENSO Service station for repair or compressor replacement. |

## SLIPPING OCCURS

| Symptom | Possible cause | Action |
|---|---|---|
| **The clutch slips at the time of rotation.** | Drop of the battery voltage | Charge the battery. |
| | Clutch surface contaminated with oil | Contact DENSO Service station for oil removal. |
| | Coil layer short-circuit | Contact DENSO Service station for replacement of the coil with a wire break. |

## RELATED TO THE EXPANSION VALVE

### THE VALVE OUTLET IS NOT COLD

| Symptom | Possible cause | Action |
|---|---|---|
| **No temperature difference can be felt between inlet and outlet.** | Extremely little refrigerant in the refrigeration cycle. | Check for gas leakage and repair if there is leakage. After repair fill in the correct quantity of refrigerant. |
| **No temperature difference can be felt between inlet and outlet.** | Excessive opening of the expansion valve | Contact DENSO Service station and request replacement of the expansion valve. |

### THE VALVE INLET IS COLD AND THERE IS DEW ON IT

| Symptom | Possible cause | Action |
|---|---|---|
| **Frost is formed.** | Excessively closed expansion valve | Contact DENSO Service station and request adjustment or replacement of the expansion valve. |
| | A tendency for clogging in the expansion valve | Contact DENSO Service station for replacement of the desiccant in expansion valve and modulator and for replacement of receiver and drier. |

## ABNORMAL NOISE DURING OPERATION

Abnormal noise can occur with various operation conditions. Accordingly, careful inspection must be performed under sufficient consideration of the contents of the inquiry.

- Does the abnormal noise occur with the air conditioner OFF?
- Does the abnormal noise occur with the air conditioner ON?
- Does the noise occur sometimes, continuously, or directly after air conditioner ON?

### WHEN THE AIR CONDITIONER IS ON

| Symptom | Possible cause | Action |
|---|---|---|
| **Abnormal noise occurring when the refrigerant is discharged from the compressor** | Caused by refrigerant compression fluctuations | Contact DENSO Service station to have the refrigerant filling quantity reduced to the specified minimum value (discharge into the atmosphere is prohibited). |
| **Abnormal noise from the compressor** | Defective compressor | Contact DENSO Service station for compressor repair or replacement. |

### DIRECTLY AFTER THE AIR CONDITIONER IS SWITCHED ON

| Symptom | Possible cause | Action |
|---|---|---|
| **Abnormal noise occurring when the compressor is started with liquid refrigerant remaining on the inside** | Accumulation of liquid refrigerant caused by liquid compression | Contact DENSO Service station to have the refrigerant filling quantity reduced to the specified minimum value (discharge into the atmosphere is prohibited). |
| **Abnormal metallic noise when the magnet clutch disengages and engages** | Caused by disengaging and engaging of the magnet clutch | Contact DENSO Service station for setting the attraction gap of the magnet clutch to the lower limit value. |

## FROM TIME TO TIME AFTER THE AIR CONDITIONER IS SWITCHED ON

| Symptom | Possible cause | Action |
|---|---|---|
| **An abnormal knocking noise when the clutch pulley deflection is transmitted via the shaft to the inside of the compressor** | Weak belt tension | Adjust the belt tension to the standard upper limit value. Contact DENSO Service station for setting the attraction gap of the magnet clutch to the lower limit value. |
| **Abnormal noise caused by refrigerant passing through expansion valve and magnet valve** | Noise caused by passage of refrigerant through the expansion valve | Confirm that the refrigerant quantity is the specified filling quantity, and if this is not the case, recover or refill as required. |

## ONLY WHEN THE AIR CONDITIONER SWITCH IS ON

| Symptom | Possible cause | Action |
|---|---|---|
| **Abnormal noise from the compressor** | Defective compressor | Contact DENSO Service station for compressor repair or replacement. |

## ABNORMAL NOISE BY PARTS

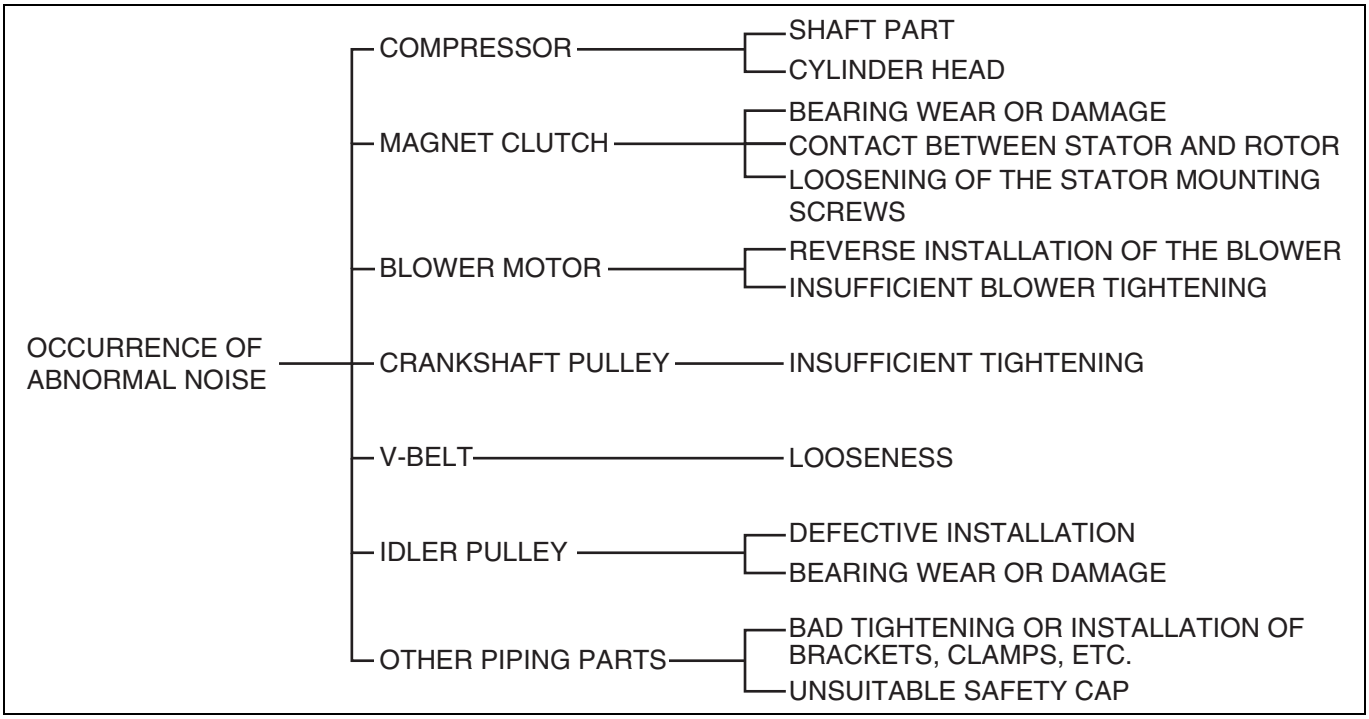


SAPH16ZZZ0100017

### ABNORMAL NOISE FROM THE COMPRESSOR

| Symptom | Possible cause | Action |
|---|---|---|
| **A knocking noise from inside the compressor** | Foreign matter caught in discharge valve or suction valve | Contact DENSO Service station for disassembly of the compressor and removal of the foreign matter. |
| | Broken discharge valve or suction valve | Contact DENSO Service station for replacement of the discharge valve or the suction valve. |

### ABNORMAL NOISE FROM THE MAGNET CLUTCH

| Symptom | Possible cause | Action |
|---|---|---|
| **A rattling noise from the magnetic clutch while it is not operating** | Bearing wear or breakage | Contact DENSO Service station for bearing replacement. |

### ABNORMAL NOISE FROM THE PIPING

| Symptom | Possible cause | Action |
|---|---|---|
| **The piping is vibrating.** | The piping is not fixed. | Fix the piping. |

### ABNORMAL NOISE FROM THE BRACKET

| Symptom | Possible cause | Action |
|---|---|---|
| **The bracket has play when touched and causes noise during operation.** | The bracket is cracked or broken. | Replace the bracket. |
| | Loose fixing bolts | Retighten |

### ABNORMAL NOISE FROM THE IDLER PULLEY

| Symptom | Possible cause | Action |
|---|---|---|
| **Abnormal rattling noise** | Broken bearing | Replace the bearing. |
| **Shows play when touched** | Cracked or loose bracket | Replace or retighten the bracket. |

### ABNORMAL NOISE FROM THE V-BELT/ NORMAL NOISE FROM THE CRANKSHAFT PULLEY

| Symptom | Possible cause | Action |
|---|---|---|
| **Rattling** | Defective installation of the crankshaft pulley | Install the crankshaft pulley correctly. |
| | Broken bearing | Replace the bearing. |
| | Defective key groove | Replace the crankshaft pulley. |

### ABNORMAL NOISE FROM THE V-BELT

| Symptom | Possible cause | Action |
|---|---|---|
| **Large deflection of the V-belt** | Loose V-belt | Retighten the V-belt. |
| **Cut side of the V-belt** | The pulley is off-center. | Center the pulley. |

# INSPECTION OF THE REFRIGERATION CYCLE
## INSPECTION WITH A GAUGE MANIFOLD

NORMAL VALUE
- HIGH-PRESSURE SIDE: 1.37 - 1.57 MPa {14 - 16 kgf/cm$^2$, 200 - 227 lbf/in$^2$}
- LOW-PRESSURE SIDE: 0.15 - 0.25 MPa {1.5 - 2.5 kgf/cm$^2$, 22 - 351 lbf/in$^2$}

<CONDITIONS>

| | |
|---|---|
| • DOORS | : FULLY OPEN |
| • INSIDE/OUTSIDE AIR SWITCHING | : INSIDE AIR |
| • ENGINE SPEED | : 1500 rpm |
| • SUCTION PORT TEMPERATURE | : 30 - 35°C {86.0 - 95.0°F} |
| • BLOWER SPEED | : HI |
| • TEMPERATURE CONTROL | : COLDEST |

SAPH16ZZZ0100018

### BAD COOLING

| Symptom | Possible cause | Action |
|---|---|---|
| **No air bubbles occur in the sight glass.** | Excessive refrigerant filling, insufficient condenser cooling | Adjust to a suitable refrigerant filling quantity (discharge into the atmosphere is prohibited). Check the condenser fins for clogging, inspect the vehicle cooling system, and clean or repair in case of abnormalities. |
| **Air bubbles occur in the sight glass.** | Insufficient refrigerant filling | Contact DENSO Service station for repair in case of gas leakages and for refrigerant filling to a suitable quantity. |
| **Insufficient air flow** | Frosted evaporator | Contact DENSO Service station for inspection of evaporator and thermistor. Repair or replace in case of abnormalities. |
| **Bad cooling** | Insufficient evaporator heat exchange, defective operation of the electric fan | Remove any clogging of the evaporator fins. Inspect the electric fan and replace it in case of abnormalities. |

## OTHER PHENOMENA

| Symptom | Possible cause | Action |
|---|---|---|
| **The low-pressure piping does not cool, there are always bubbles in the sight glass.** | Entry of air into the refrigeration cycle | Contact DENSO Service station for refrigerant bleeding to a suitable quantity (discharge into the atmosphere is prohibited), and refill refrigerant after sufficient vacuum drawing in the refrigeration cycle. |
| **The low-pressure side shows a negative pressure (when the refrigeration cycle is completely clogged. In case of a clogging tendency, negative pressure is shown gradually).** | Clogging of the refrigeration cycle (piping, expansion valve, receiver, drier, etc.) | Contact DENSO Service station for replacement of abnormal parts in the refrigeration cycle. |
| **After expiration of a fixed time, the low-pressure side gradually shows a negative pressure.** | Entry of water into the refrigeration cycle, water absorption capacity of receiver and drier exceeded | Contact DENSO Service station for desiccant in the modulator and for replacement of receiver and drier. Perform sufficient vacuum drawing and moisture removal before refrigerant filling. |
| **Condensation forms on the low-pressure-piping.** | Excessive opening of the expansion valve | Contact DENSO Service station and request replacement of the expansion valve. |
| **When the compressor is switched off, high pressure and low pressure show the same value (the compressor does not become very hot).** | Defective compressor compression | Contact DENSO Service station for compressor repair. |

# ELECTRICAL EQUIPMENT

## ELECTRICAL PARTS

EN01H16ZZZ010F01028001

### STARTING SYSTEM

| Symptom | Possible cause | Action |
|---|---|---|
| **Engine does not operate (Starter switch)** | Poor contact condition | Clean or replace contacts. |
| **Engine does not operate (Battery)** | Open circuit in harness | Check and correct. |
| | Short circuit between electrodes | Replace battery. |
| | Poor contact condition of battery terminal | Clean or retighten. |
| **Engine does not operate (Engine oil)** | Improper viscosity oil | Change oil. |
| **Engine does not operate (Starter relay)** | Defective or poor contact of starter relay | Repair or replace. |
| **Engine does not operate (Starter)** | Starter does not operate | Repair or replace. Refer to chapter "**STARTER**". |

### HEAD LIGHT CIRCUIT

| Symptom | Possible cause | Action |
|---|---|---|
| **Head light does not turn on (Head light)** | Bulb burned out | Replace bulb. |
| | Not grounded | Check the grounding. |
| | Broken wire | Repair wire. |
| **Head light does not turn on (Fuse)** | Fuse burned out | Replace fuse. |
| **Head light does not turn on (Head light relay)** | Defective relay | Replace relay. |
| **Head light does not turn on (Lighting switch)** | Broken wire between relay and switch | Repair wire. |
| | Defective switch | Replace switch. |

### TURN SIGNAL CIRCUIT

| Symptom | Possible cause | Action |
|---|---|---|
| **Turn signal does not work (Turn signal light)** | Bulb burned out | Replace bulb. |
| | Not grounded | Check the grounding. |
| | Broken wire | Repair wire. |
| **Turn signal does not work (Fuse)** | Fuse burned out | Replace fuse. |
| **Turn signal does not work (Turn signal flasher)** | Not grounded | Check the grounding. |
| | Defective flasher | Replace flasher. |
| **Turn signal does not work (Turn signal switch)** | Broken wire between fuse and switch | Repair wire. |
| | Defective switch | Replace switch. |

## TAIL AND LICENSE PLATE LIGHT CIRCUIT

| Symptom | Possible cause | Action |
|---|---|---|
| **Tail and license plate light does not turn on (Light)** | Bulb burned out | Replace bulb. |
| | Not grounded | Check the grounding. |
| | Broken wire | Repair wire. |
| **Tail and license plate light does not turn on (Fuse)** | Fuse burned out | Replace fuse. |
| **Tail and license plate light does not turn on (Tail light relay)** | Defective relay | Replace relay |
| **Tail and license plate light does not turn on (Lighting switch)** | Broken wire between fuse and switch | Replace wire. |
| | Defective switch | Replace switch. |

# TROUBLE SHOOTING - ELECTRICAL CONTROL SYSTEM

3-001

**ABOUT HINO DX II .....3-2**
About HINO DX II .....3-2
**BASIC PROCEDURE FOR TROUBLESHOOTING .....3-4**
BASIC PROCEDURE FOR TROUBLESHOOTING.....3-4
**SYMPTOM CONFIRMATION AND DIAGNOSTIC TROUBLE CODE .....3-6**
SYMPTOM CONFIRMATION AND DIAGNOSTIC TROUBLE CODE.....3-6
**SYMPTOM SIMULATION.....3-9**
SYMPTOM SIMULATION.....3-9
**TROUBLE CODE DIAGNOSTIC INSPECTION FLOW CHART.....3-11**
TROUBLE CODE DIAGNOSTIC INSPECTION FLOW CHART.....3-11
**ELECTRONIC CIRCUIT INSPECTION PROCEDURE.....3-12**
ELECTRONIC CIRCUIT INSPECTION PROCEDURE .....3-12
**INSPECTION PROCEDURE FOR MULTIPLE DTCS .....3-17**
INSPECTION PROCEDURE FOR MULTIPLE DTCS .....3-17

# ABOUT HINO DX II

## About HINO DX II

EN01H16ZZZ020F02001001

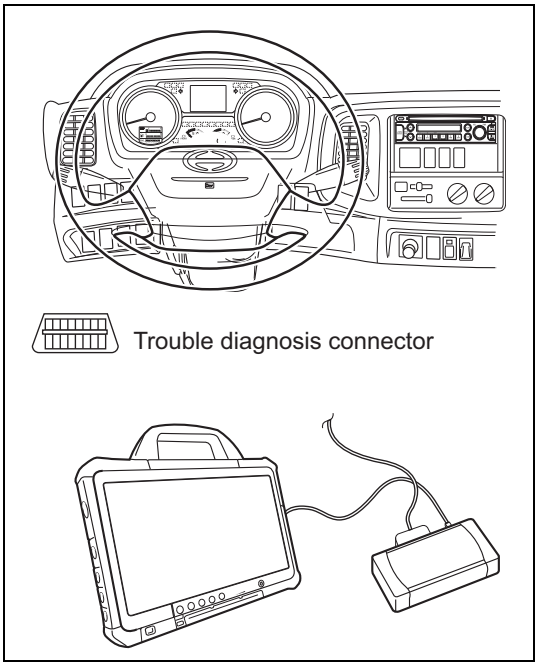


SAPH16ZZZ0200001

**1. PREPARATION FOR CONNECTING HINO DX II**

(1) The "HINO DX II " is a failure diagnosis tool for the common rail fuel injection system and the chassis system. For connecting the computer to a vehicle, the "DST-i" and the dedicated cable will be required.

**SPECIAL TOOL: Computer interface**

| Part name | Part No. |
|---|---|
| **DENSO DST-i Set (Without LCD)** | **Without Bluetooth® 95171-01021** |
| | **With Bluetooth® 95171-01041** |
| **DENSO DST-i Set (With LCD)** | **Without Bluetooth® 95171-01031** |
| | **With Bluetooth® 95171-01051** |

**HINT**

**Install the "Hino Diagnostic eXplorer II " (HINO DX II ) software in a computer. For detailed installation procedures, refer to the HINO DX II OPERATION MANUAL supplied on the Global Service Portal Site (Hino-GSPS).**

**2. CONNECTING HINO DX II**

(1) Connect the DST-i to the trouble diagnosis connector located in the left side of steering column.
(2) Connect the computer in which the HINO DX II is installed, to the DST-i.
(3) Turn the starter switch to "ON".
(4) Turn on the power switch of the computer to start the HINO DX II .

### 3. APPARATUS FOR TROUBLE DIAGNOSIS

| Part name | Part No. | Illustration of appearance | Outline/function |
|---|---|---|---|
| Laptop computer*1 | — | 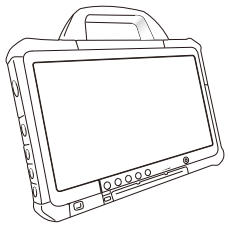 | **The following specifications are necessary for operation of HINO DX II .**<br>• Operating system (OS): Windows7 Professional 32 bit.<br>• Browser: Microsoft Internet Explorer 8.0, 9.0<br>• CPU: 32 bit processors more than 1GHz.<br>• Memory: More than 1Gbyte.<br>• HDD: More than 100Gbyte. |
| DENSO DST-i Set (without LCD) | Without Bluetooth®<br>95171-01021<br>With Bluetooth®<br>95171-01041 | 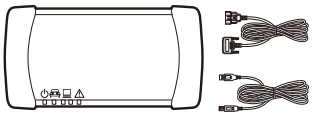 | Computer interface<br>These parts are supplied by DENSO Distributor. |
| DENSO DST-i Set (with LCD) | Without Bluetooth®<br>95171-01031<br>With Bluetooth®<br>95171-01051 | 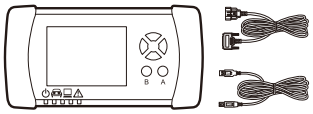 | |
| Signal check harness | 09843-E4080<br>(For engine ECU) | 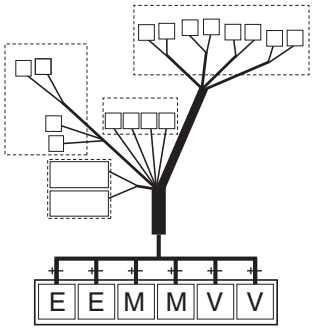 | Inserting this harness between the ECU side harness and the harness of the vehicle, you can diagnose the ECU using tester rods without cutting off the power. |
| | S0904-91080<br>(For vehicle control ECU) | 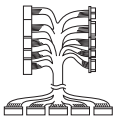 | |
| | 09843-E9030<br>(For DCU) |  | — |

(*1): Complete function of HINO DX II is confirmed on "Panasonic CF-D1".

# BASIC PROCEDURE FOR TROUBLESHOOTING

## BASIC PROCEDURE FOR TROUBLESHOOTING

EN01H16ZZZ020F02002001

**HINT**

**Follow the diagnostic procedure described below and troubleshoot the problem. Only the basic procedure is described herein. For the detailed procedure, refer to the specific section of each system, where more accurate methods are described for each circuit.**

| | |
|---|---|
| 1 | Bring the faulty vehicle into the service area |

**Go to next step**

| | |
|---|---|
| 2 | Interview the user and analyze the trouble |

1. Verify with the customer the circumstances and conditions surrounding the trouble occurred, and write down the information.

**HINT**

- **In troubleshooting, confirm that problem symptoms have been accurately identified. Preconceptions should be discarded in order to make an accurate judgment. To clearly understand what the problem symptoms are, it is extremely important to ask the customer about the problem and the conditions at the time the malfunction occurred.**
- **Gather as much information as possible for reference. Past problems that seem unrelated may also help in some cases.**
- **The following 5 items are important points in the problem analysis.**

| | |
|---|---|
| What | Vehicle model, system name |
| When | Data, time, occurrence frequency |
| Where | Road conditions |
| Under what conditions? | Running conditions, driving conditions, weather conditions |
| How did it happen? | Problem symptoms |

**Go to next step**

| | |
|---|---|
| 3 | Verify the trouble symptoms and check the Diagnostic Trouble Code (Including the freeze-frame data) |

1. Check the voltage of the battery using an electrical tester. Reference value: 10 to 16 V (When engine is stopped)
2. Check for blown fuses, disconnected wire harnesses, short circuits, improperly connected connectors, and other parts that can be visually checked.
3. Verify the phenomena and conditions of the troubled part and check the Diagnostic Trouble Code (DTC) in the appropriate chart.
   DTC detected: Go to the DTC Chart.

**NOTICE**

**All the vehicle settings must be checked before starting repair work, because in some systems the memory is erased when the battery negative terminal is disconnected, and in other systems the initial settings are restored when a part is replaced.**

**Go to next step**

| | |
|---|---|
| 4 | Repair the faulty parts |

1. Repair the faulty systems or parts, following the instructions in each DTC chart.

**Go to next step**

| | |
|---|---|
| 5 | Perform a verification test |

1. After repair is completed, check if the problem has been resolved. (If the problem recurs, perform a verification test to determine if the symptoms and conditions are the same as when the initial trouble occurred.)

**Go to next step**

| | |
|---|---|
| 6 | Restore the vehicle |

1. Restore all the settings back to the vehicle conditions verified in step 3.

**HINT**

**If some settings cannot be restored, be sure to tell the customer why they cannot be restored.**

**Go to next step**

| |
|---|
| END |

# SYMPTOM CONFIRMATION AND DIAGNOSTIC TROUBLE CODE

## SYMPTOM CONFIRMATION AND DIAGNOSTIC TROUBLE CODE

EN01H16ZZZ020F02003001

**HINT**

- **The diagnosis system has a large variety of functions. If there is a malfunction in a circuit that sends signals to the ECU, the fault is recorded as a code in the ECU memory and output as a Diagnostic Trouble Code (DTC) during troubleshooting. To make the most of this diagnostic function and quickly pinpoint the area of a problem, HINO DX II has a built-in "Failure Information" function that helps in making the troubleshooting process more effective.**
- **Checking the Diagnostic Code is important to determine whether the malfunction indicated by the DTC is still a problem or whether it occurred in the past but has already been resolved. In addition, the trouble must be checked to verify whether or not the malfunction indicated by the DTC is directly related to the trouble symptoms. That is why it is necessary to check the DTC both before and after having verified the trouble symptoms, in order to determine the current circumstances. If this is neglected, it may result in unnecessary troubleshooting on a normally operating system, difficulties in locating the malfunctioning part, or repair performed on an unrelated part. The DTC must therefore always be checked as part of the normal work procedure.**

| | |
|---|---|
| 1 | Pinpoint the fault (User interview) |

**Go to next step**

| | |
|---|---|
| 2 | Check the DTC |

**NOTICE**
**Be sure to check all the DTCs.**

| Result | Go to |
|---|---|
| No DTC is output from any of the connected ECUs. | A |
| DTC is output. | B |

**A** → To step 7

**B**

| | |
|---|---|
| 3 | Save the DTC and freeze-frame data |

1. Record the output DTC and freeze-frame data.

**NOTICE**

**Be sure not to delete the data before you save it. If the data are deleted, the DTC, freeze-frame data, and history data will be erased as well.**

| Result | Go to |
|---|---|
| Non-communication diagnosis. | A |
| Communication diagnosis only | B |
| Non-communication and communication diagnosis | C |

A → To step 5

B → Troubleshoot the bus (communication line)

C

| | |
|---|---|
| 4 | Isolate the cause of trouble |

1. The output Diagnostic Codes will determine whether the main cause of the trouble is a part or a bus (communication line).

**HINT**

**Communication diagnosis may also be output due to a faulty part.**

| Result | Go to |
|---|---|
| Non-communication diagnosis. | A |
| Faulty part | B |

A → Troubleshoot the bus (communication line).

B

| | |
|---|---|
| 5 | Delete the DTC and freeze-frame data |

**Go to next step**

| | |
|---|---|
| 6 | Test-drive the vehicle and verify the DTC |

| Result | Go to |
|---|---|
| DTC is output | A |
| DTC is not output | B |

**A** → Troubleshoot using workflow of corresponding DTC.

**B**

Perform a simulation test using the simulation method for the trouble symptoms.

| | |
|---|---|
| 7 | Verify the trouble phenomena |

**NG** → Troubleshoot using the user interview results and ECU data monitor.

**OK**

System normal

# SYMPTOM SIMULATION

## SYMPTOM SIMULATION

EN01H16ZZZ020F02004001

**HINT**

- **Troubleshooting is most difficult when trouble symptoms do not appear. In such a case it is necessary to obtain a thorough analysis of the trouble from the customer, and to reproduce in the vehicle the same conditions and circumstances as when the trouble occurred. Troubleshooting the vehicle without checking the trouble symptoms may result in missing something important during the repair work or starting with a wrong idea and hitting a brick wall in the end.**
- **For example, the trouble will never be discovered if it occurred when the engine was cold and the engine is checked when it is warm, or if the trouble is a vibration caused by the road conditions while driving and the vehicle is checked when it is stationary.**
- **Although some limit cases cannot be reproduced, such as extreme vibration, heat or humidity, the trouble symptoms simulation techniques introduced herein are effective when external causes are applied to a stationary vehicle.**

Key points regarding trouble simulation tests
The trouble symptoms should be checked by using simulation, and the location and position of the problem must be determined. To do this, the circuits that contain the malfunction are first pinpointed based on the trouble symptoms and then hooked up to a tester, before the simulation test is conducted. Then, trouble simulation is used to determine whether the circuit being tested is faulty or normal, and at the same time the trouble symptoms are checked. To pinpoint the cause of the trouble, refer to the Trouble Symptoms Chart for each system.

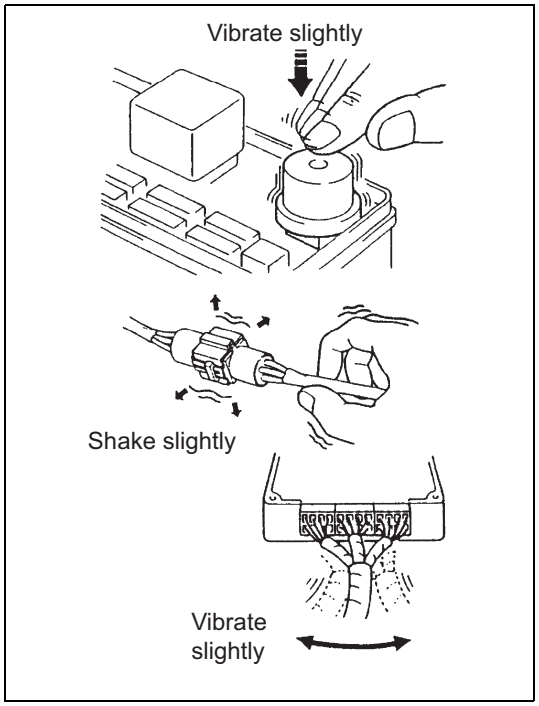


SAPH16ZZZ0200027

**1. Vibration method: when trouble is thought to be due to vibration**

(1) Parts and sensors
Apply vibration to the parts thought to be the cause of the trouble by gently tapping them, and see if the trouble occurs.

**HINT**
**If a strong force is applied to a relay, its point may open.**

(2) Connectors
Gently shake the connectors up and down and to the left and right.

(3) Wire harnesses
Gently shake the wire harnesses up and down and to the left and right, and see if the trouble occurs.

**HINT**
**In particular, the connector base, vibration support points, and parts that go through the vehicle body must be checked carefully.**

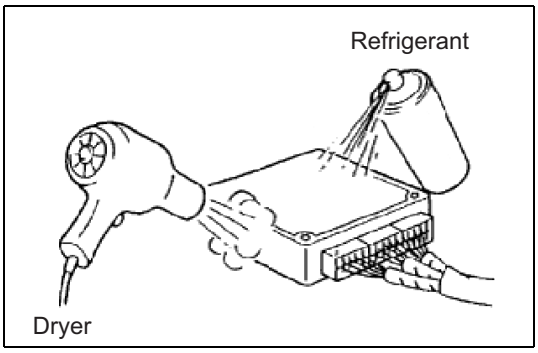


SAPH16ZZZ0200028

**2. Cold-warm method: when trouble is thought to occur when parts are cold or warm**

(1) Using a hair dryer or refrigerant, heat or cool the parts thought to be the cause of the trouble, and see if the trouble occurs.

**⚠ CAUTION**

- **When heating up a part, do not heat it up more than 60 °C (Temperature when it can still be touched by hand).**
- **Do not remove the cover of an ECU or other equipment and apply heat or refrigerant directly to electronic components.**

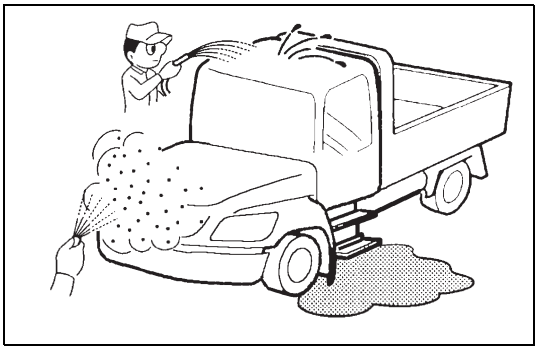

SAPH16ZZZ0200029

**3. Water application method: when trouble is thought to occur during rainy or hot weather**

(1) Apply water to the vehicle and see if the trouble occurs.

**⚠ CAUTION**

- **Do not apply water directly into the engine room. Spray the front of the radiator with a fine mist of water to indirectly change the temperature and humidity.**
- **Do not apply water directly to electronic components.**

**4. Other: when trouble is thought to be due to electrical overload**

(1) Increase the electrical load by operating the heater blower, headlamps, rear defogger, and other electrical equipment, and see if the trouble occurs.

# TROUBLE CODE DIAGNOSTIC INSPECTION FLOW CHART

## TROUBLE CODE DIAGNOSTIC INSPECTION FLOW CHART

EN01H16ZZZ020F02005001

- The troubleshooting flow chart is described as step by step “Inspection procedure” for each DTC in the chapter of each system.
- The troubleshooting guidelines for each DTC are contained in the following sections.

1. **Information section**
   Technical information (including simplified circuit diagrams) are provided in order to investigate the cause of trouble.
2. **Inspection procedure section**
   The inspection procedure for each DTC is described step by step.
3. **Checklist**
   A checklist for inspection items is provided.

**NOTICE**
**The check list will be used to check the result of each inspection step. Please use the “Inspection procedure” to verify your work during the inspection.**

# ELECTRONIC CIRCUIT INSPECTION PROCEDURE

## ELECTRONIC CIRCUIT INSPECTION PROCEDURE

EN01H16ZZZ020F02006001

**1. Basic Check**

(1) Measuring resistance of electronic components

a. Unless specified otherwise, the resistance is always measured at an ambient temperature of 20 °C. If the resistance is measured right after the vehicle has been driven, when the ambient temperature is high, the resistance value will be outside the prescribed value. Measure the resistance after the engine has cooled down.

(2) Handling connectors

a. To separate a locking connector, press the connector in the mating direction to allow the locking tab to move easily, and then unlock the connector.

b. When separating a connector, always hold the connector, not the harness.

c. Before connecting a connector, check the terminals for deformation, scratches, or missing parts.

d. To connect a locking connector, securely insert the two halves together until you hear the lock click into place.

e. When checking a connector with an electrical tester, use a mini test lead inserted into the back (the harness side) of the connector.

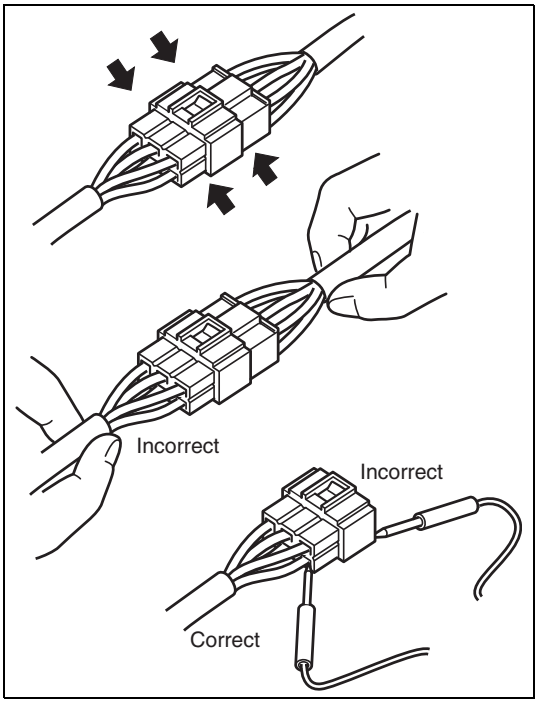


SAPH16ZZZ0200030

**⚠ CAUTION**

- **A waterproof connector cannot be checked from the back, attach a sub harness and then check the connector.**
- **Do not move the inserted test lead more than you have to; otherwise, you may damage the terminal.**

(3) Checking connectors

a. With the connector connected, hold the connector housing and check that the connector is inserted properly and the lock clicks into place (proper fit).

b. With the connector separated, gently pull on the wire harness and check if it is secure. Visually check for missing terminals, loose caulkings, or a broken wires, and for the presence of rust, metal fragments, water, etc. (Also for corrosion, presence of foreign substances and terminal deformation).

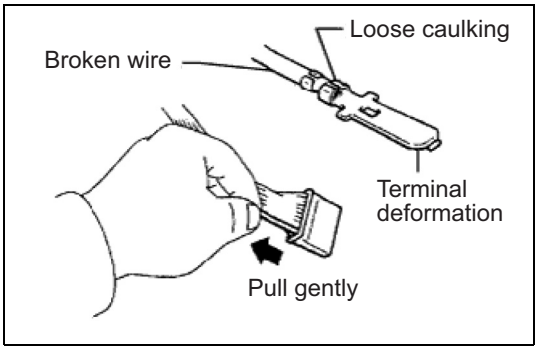


SAPH16ZZZ0200031

**⚠ CAUTION**

**Always use a plated male terminal to test a plated female terminal.**

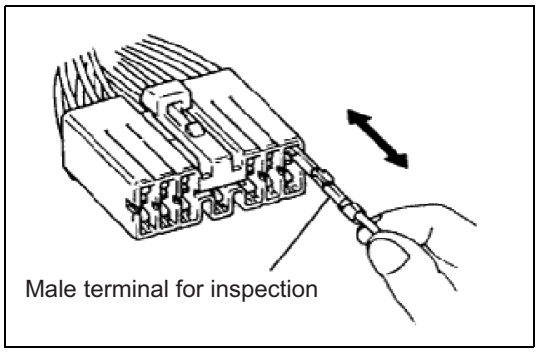


SAPH16ZZZ0200032

c. Prepare a male terminal that matches the female terminal and insert it into it. Then, check the terminal contact pressure, mating condition, and the sliding weight.

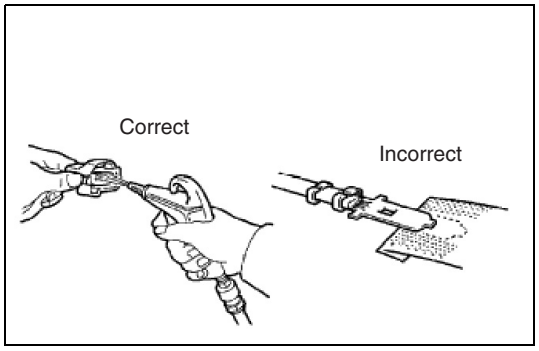


SAPH16ZZZ0200033

(4) Repairing connector terminals

a. Clean dirty contact points with an air gun or clean rag. Never use sandpaper to polish the contact points because the surface plating will come off.

b. Replace the female terminal if its contact pressure is abnormal. If the female terminal corresponding to the part side is gold-plated (gold color), use a gold-plated female terminal; if it is tin-plated (silver color), use a tin-plated female terminal.

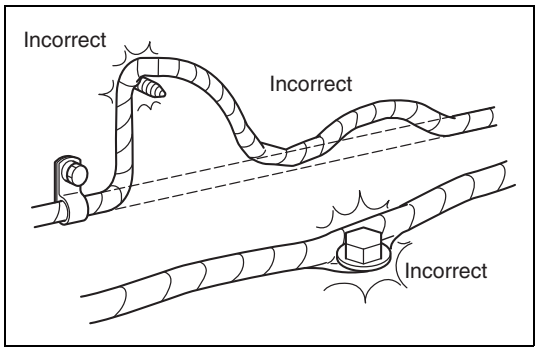


SAPH16ZZZ0200034

(5) Handling wire harnesses

a. Before removing a wire harness, check the harness route and condition of the clamps so that it can be securely reinstalled.

b. Do not twist or pull the harness, and do not make it more loose than it needs to be.

c. Keep the harness away from hot areas and from rotating, sliding or vibrating parts and sharp edges (such as panel edges and screw tips).

d. When installing parts, make sure they do not pinch the harness.

e. Do not tear the harness covering. If it is torn, replace it or repair it securely with vinyl tape.

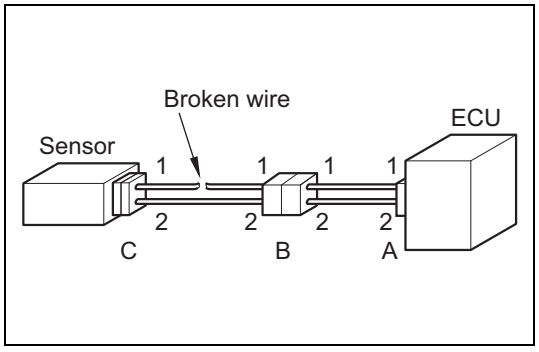


SAPH16ZZZ0200035

**2. Broken circuit Check**

(1) In the broken circuit of the wire harness shown in Figure 1, the location of the break is determined by conducting a continuity check or voltage check.

(2) Checking continuity

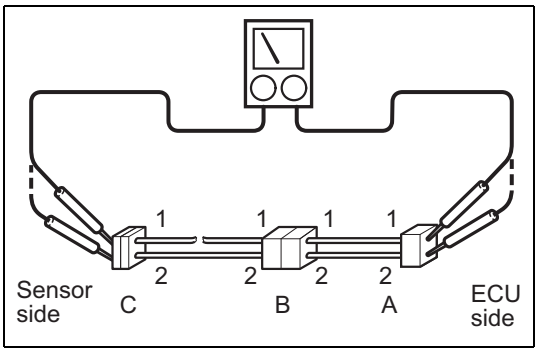


SAPH16ZZZ0200036

a. Disconnect connectors A and C and measure the resistance between them.

**Resistance value: 1 Ω max.**

**HINT**

**Measure the resistance while gently jiggling the wire harness up and down and to the left and right.**

b. In Figure 2, there is no continuity (disconnection) between connector A terminal 1 and connector C terminal 1, and there is continuity between connector A terminal 2 and connector C terminal 2; therefore, there is a disconnection in the circuit between connector A terminal 1 and connector C terminal 1.

c. Disconnect connector B and measure the resistance between the connectors.

d. In Figure 3, there is continuity between connector A terminal 1 and connector B1 terminal 1, and there is no continuity (disconnection) between connector B2 terminal 1 and connector C terminal 1; therefore, there is a disconnection in the circuit between connector B2 terminal 1 and connector C terminal 1.

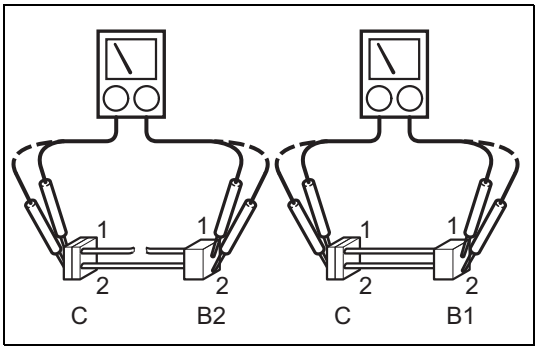


SAPH16ZZZ0200037

(3) Checking voltage

**HINT**

**Use a signal check harness for systems that have a signal check harness installed.**

a. In a circuit where voltage is applied to ECU connector terminals, check for a disconnection in the circuit by conducting a voltage check.

b. With the connectors connected as shown in Figure 4, measure the voltage at the ECU 5 V output terminal between the body ground and connector A terminal 1, followed in sequence by connector B terminal 1 and connector C terminal 1.

c. When the following results are obtained, there is a disconnection in the wire harness circuit between connector B terminal 1 and connector C terminal 1.

**Standard value**

**5 V between connector A terminal 1 and the body ground**

**5 V between connector B terminal 1 and the body ground**

**0 V between connector C terminal 1 and the body ground**

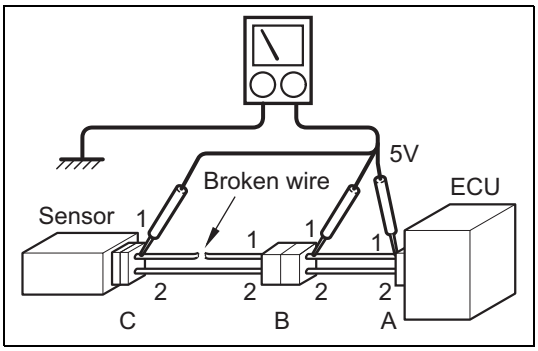


SAPH16ZZZ0200038

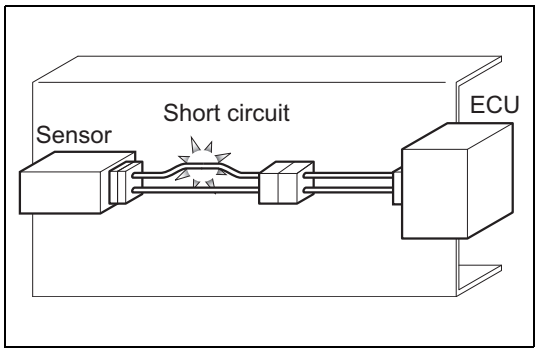


SAPH16ZZZ0200039

**3. Short circuit check**

(1) When a wire harness ground is short-circuited as shown in Figure 5, a continuity check with the ground is conducted to determine the cause of the short circuit.

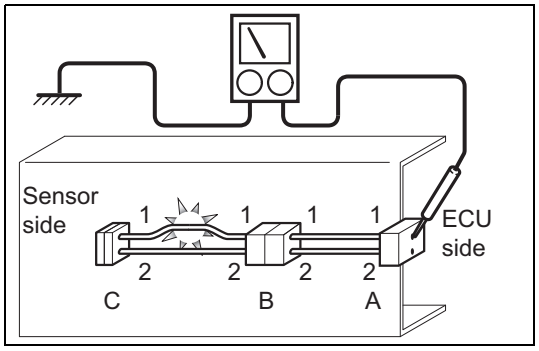


SAPH16ZZZ0200040

(2) Checking continuity with the ground

a. Disconnect connectors A and C and measure the resistance among connector A terminal 1, terminal 2, and the body ground.

**HINT**

**Measure the resistance while gently shaking the wire harness up and down and to the left and right.**

b. As shown in Figure 6, there is continuity (short circuit) between connector A terminal 1 and the body ground and no continuity between connector A terminal 2 and the body ground; therefore, there is a short circuit in the circuit between connector A terminal 1 and connector C terminal 1.

c. Disconnect connector B and measure the resistance between connector A terminal 1 and the body ground and between connector B2 terminal 1 and the body ground. There is no continuity between connector A terminal 1 and the body ground and continuity between connector B2 terminal 1 and the body ground; therefore, there is a short circuit in the circuit between connector B2 terminal 1 and connector C terminal 1.

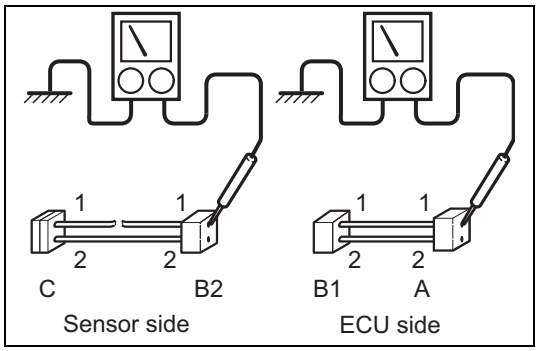


SAPH16ZZZ0200041

**4. Visual check and contact pressure check**

(1) Disconnect the connectors at both ends.

(2) Check the connector terminals for the presence of corrosion or foreign substances.

(3) Check rounded parts for damage due to loosening and verify that terminals are securely locked.

**HINT**

**Make sure terminals do not come out if they are gently pulled from behind.**

(4) Prepare a male test terminal and insert it into a female terminal, then pull it out.

**HINT**

**If the test terminal pulls out easier than another terminal, it means that there is poor contact in that part.**

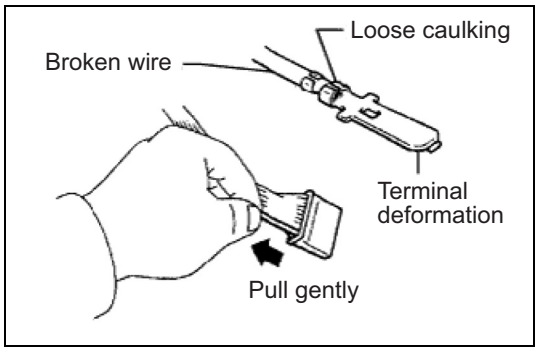


SAPH16ZZZ0200042

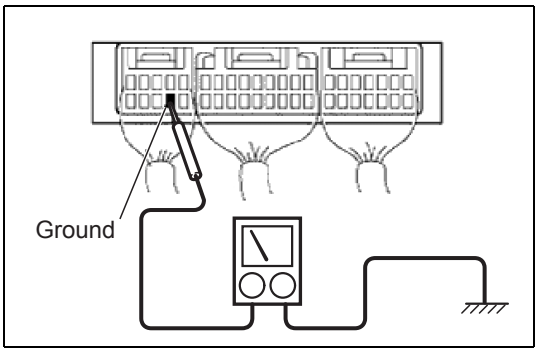


SAPH16ZZZ0200043

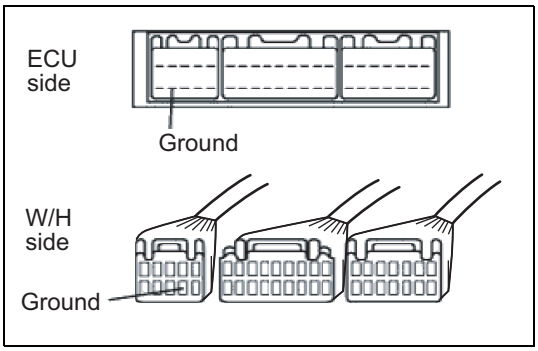


SAPH16ZZZ0200044

**5. ECU Check and replacement**

**⚠ CAUTION**

- **Check by using the back of the harness-side connector with the connector connected to the ECU.**
- **When measuring conditions are not indicated, check with the engine stopped and the ignition ON.**

(1) First check the ECU ground circuit and repair it if faulty. If normal, the ECU is faulty. Replace it with a good one, then verify that the trouble do not appear again.

a. Measure the resistance between the ECU ground terminal and the body ground.
**Resistance value:1Ωmax.**

b. Disconnect the ECU connector and check if the ground terminals on the ECU side and the harness side are bent. Also, check the contact of the terminals.

# INSPECTION PROCEDURE FOR MULTIPLE DTCS

## INSPECTION PROCEDURE FOR MULTIPLE DTCS

EN01H16ZZZ020F02007001

There can be various possible reasons when multiple Diagnostic Code are being output. Anyway, general points to following during inspection are as follows.

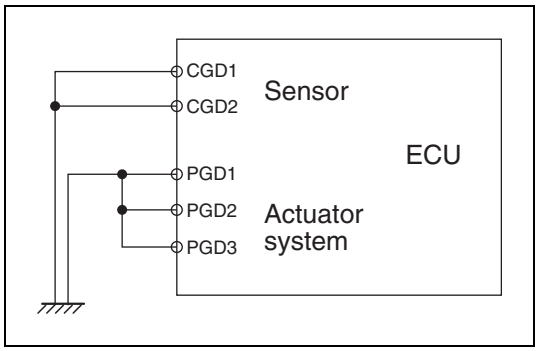


SAPH16ZZZ0200045

**1. ECU Ground**

(1) Check all the connecting parts for looseness, poor contact, dirt, corrosion, etc.

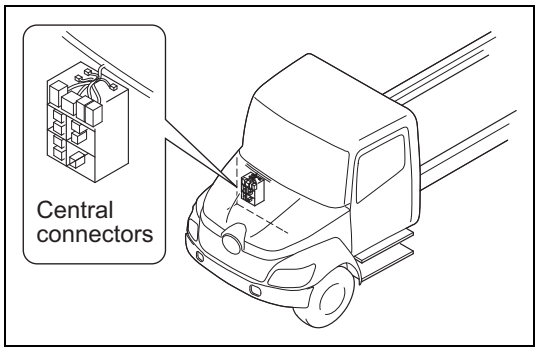


SAPH16ZZZ0200046

**2. Central Connectors**

(1) Check the cab-chassis connector parts, engine-chassis harness connector parts, and ECU connector parts for looseness, poor contact, dirt, corrosion, etc.

# ENGINE CONTROL SYSTEM (J08E)

4-001

**ENGINE CONTROL SYSTEM.....4-4**
PRECAUTIONS FOR DIAGNOSIS.....4-4
SYSTEM BLOCK DIAGRAM.....4-6
SYSTEM DIAGRAM.....4-7
PRECAUTIONS.....4-9
SENSOR LOCATION.....4-13
COMPUTER (ECU) PIN ASSIGNMENT.....4-22
ENGINE ECU CONNECTOR.....4-28
INSPECTION.....4-32
DIAGNOSIS USING THE PC DIAGNOSIS TOOL.....4-33
DIAGNOSTIC TROUBLE CODE (DTC) TABLE.....4-34
GROUP SHARING THE SENSOR POWER SUPPLY TERMINAL.....4-55
GROUP SHARING THE SENSOR GND TERMINAL.....4-56
ENGINE BASIC INSPECTION SHEET (ENGINE INSPECTION CHECK SHEET).....4-57
NO DTC.....4-61
SIMULTANEOUS MALFUNCTION OF MULTIPLE ELECTRIC SYSTEMS.....4-64
DTC: P0005.....4-68
DTC: P0006 and P0007.....4-72
DTC: P0016.....4-77
DTC: P0027.....4-80
DTC: P003A.....4-85
DTC: P0045.....4-90
DTC: P0047.....4-95
DTC: P0048.....4-100
DTC: P006E.....4-105
DTC: P006F.....4-109
DTC: P007B.....4-113
DTC: P007C and P007D.....4-126
DTC: P0088.....4-134
DTC: P0096.....4-143
DTC: P0097 and P0098.....4-154
DTC: P00AF.....4-162
DTC: P0101.....4-166
DTC: P0104.....4-173
DTC: P0106.....4-179
DTC: P0107.....4-185
DTC: P0108.....4-192
DTC: P0111.....4-198
DTC: P0112 and P0113.....4-204
DTC: P0115.....4-210
DTC: P0117 and P0118.....4-218
DTC: P011A.....4-226
DTC: P0122 and P0123.....4-234
DTC: P0126.....4-244
DTC: P0128.....4-248
DTC: P0148.....4-253
DTC: P016E and P016F.....4-264
DTC: P0182 and P0183.....4-274
DTC: P0191.....4-281
DTC: P0192 and P0193.....4-286
DTC: P01A5.....4-295
DTC: P01A6.....4-302
DTC: P0200.....4-309
DTC: P0201, P0202, P0203, P0204, P0205 and P0206.....4-311
DTC: P0217.....4-316
DTC: P0219.....4-321
DTC: P0222 and P0223.....4-327
DTC: P0234.....4-337
DTC: P0263, P0266, P0269, P0272, P0275 and P0278.....4-343
DTC: P026C and P026D.....4-354
DTC: P0299.....4-367
DTC: P0300 (J08E-VB).....4-372
DTC: P0300 (J08E-WU).....4-380
DTC: P0301, P0302, P0303, P0304, P0305 and P0306.....4-389
DTC: P0335.....4-397
DTC: P0336.....4-402
DTC: P0340.....4-408
DTC: P0341.....4-413
DTC: P0381.....4-420
DTC: P0401.....4-425
DTC: P0402.....4-439
DTC: P0404.....4-449
DTC: P0405 and P0406.....4-454
DTC: P041B.....4-460
DTC: P041C and P041D.....4-468
DTC: P0420.....4-476
DTC: P0421.....4-478
DTC: P0422.....4-490
DTC: P0489 and P0490.....4-493
DTC: P049D.....4-499
DTC: P04D5 and P04D6.....4-504
DTC: P04DA.....4-512
DTC: P04DB.....4-522

DTC: P0500 and P0501 ....4-530
DTC: P0504....4-536
DTC: P0506 and P0507 ....4-542
DTC: P0524....4-545
DTC: P0545 and P0546 ....4-550
DTC: P054E and P054F....4-559
DTC: P0562 and P0563 ....4-562
DTC: P0603....4-568
DTC: P0605....4-572
DTC: P0606....4-574
DTC: P0607....4-576
DTC: P0610....4-578
DTC: P0611....4-581
DTC: P0617....4-583
DTC: P0628 and P0629 ....4-587
DTC: P062F ....4-594
DTC: P0630....4-598
DTC: P0642....4-601
DTC: P0643....4-605
DTC: P064C ....4-610
DTC: P0652....4-615
DTC: P0653....4-620
DTC: P0671, P0672, P0675 and P0676 ....4-625
DTC: P0683....4-635
DTC: P0686....4-640
DTC: P0698....4-644
DTC: P0699....4-646
DTC: P06A4 ....4-648
DTC: P06A5 ....4-650
DTC: P06D3 and P06D4 ....4-652
DTC: P0704....4-659
DTC: P073D ....4-663
DTC: P081A ....4-669
DTC: P081B ....4-673
DTC: P0850....4-677
DTC: P1133....4-682
DTC: P119F ....4-688
DTC: P1426....4-693
DTC: P1427....4-699
DTC: P1428....4-705
DTC: P1458....4-711
DTC: P1459....4-716
DTC: P14B0 ....4-721
DTC: P14B2 ....4-725
DTC: P14B3 and P14B4 ....4-729
DTC: P14B7 and P14B8 ....4-735
DTC: P14BC and P14BD ....4-741
DTC: P14BF ....4-747
DTC: P1515....4-752
DTC: P1530....4-757
DTC: P2002....4-761
DTC: P200C ....4-781
DTC: P2032 and P2033 ....4-787
DTC: P203F ....4-795
DTC: P204F ....4-799
DTC: P206B ....4-801
DTC: P207F ....4-824
DTC: P2080....4-847
DTC: P2084....4-856
DTC: P20CD ....4-864
DTC: P20CE....4-868
DTC: P20CF....4-872
DTC: P20D8 ....4-877
DTC: P20DE....4-882
DTC: P20DF....4-886
DTC: P20E0 ....4-892
DTC: P20EE....4-898
DTC: P2100....4-923
DTC: P2101....4-929
DTC: P2103....4-935
DTC: P2120....4-941
DTC: P2122 and P2123 ....4-945
DTC: P2127 and P2128 ....4-953
DTC: P2135....4-962
DTC: P2138....4-967
DTC: P2146....4-972
DTC: P2147 and P2148 ....4-979
DTC: P2149....4-987
DTC: P2150 and P2151 ....4-993
DTC: P2184 and P2185 ....4-1001
DTC: P2201....4-1009
DTC: P2227....4-1048
DTC: P2228 and P2229 ....4-1052
DTC: P2269....4-1057
DTC: P226C ....4-1061
DTC: P229F ....4-1069
DTC: P22D3 ....4-1109
DTC: P240F ....4-1113
DTC: P2428....4-1122
DTC: P242B ....4-1126
DTC: P242C and P242D ....4-1134
DTC: P244A ....4-1142
DTC: P244B ....4-1159
DTC: P2457....4-1179
DTC: P2458....4-1193
DTC: P2459....4-1202
DTC: P2463....4-1204
DTC: P246F ....4-1209
DTC: P2470 and P2471 ....4-1217
DTC: P2481 and P2482 ....4-1225
DTC: P2483....4-1233
DTC: P24A0 ....4-1241
DTC: P24A1 ....4-1244
DTC: P24A2 ....4-1246
DTC: P24A3 ....4-1256
DTC: P24AE....4-1261
DTC: P24AF....4-1269
DTC: P24B0 ....4-1274

DTC: P24B1 ..... 4-1279
DTC: P24B4 ..... 4-1282
DTC: P24B6 ..... 4-1292
DTC: P24B7 ..... 4-1297
DTC: P24C7 ..... 4-1300
DTC: P24D1 ..... 4-1304
DTC: P24DA ..... 4-1309
DTC: P2563 ..... 4-1314
DTC: P2564 and P2565 ..... 4-1319
DTC: P259E ..... 4-1326
DTC: P259F ..... 4-1331
DTC: P2635 ..... 4-1336
DTC: P268A and P2696 ..... 4-1345
DTC: P2A00 ..... 4-1351
DTC: P2A01 ..... 4-1360
DTC: P2BA9 ..... 4-1369
DTC: U0073 ..... 4-1374
DTC: U010A ..... 4-1377
DTC: U010C ..... 4-1380
DTC: U010E ..... 4-1383
DTC: U029D ..... 4-1386
DTC: U029E ..... 4-1389
DTC: U02A2 ..... 4-1392
DTC: U02A3 ..... 4-1395
DTC: U0301 ..... 4-1398
DTC: U1001 ..... 4-1401
DTC: U110A ..... 4-1404

# ENGINE CONTROL SYSTEM

## PRECAUTIONS FOR DIAGNOSIS

EN01H16F01030F03001001

- Verify that connectors are properly connected before starting operations.
- Make sure to set the starter switch to the "LOCK" position before disconnecting a connector.
- Replace the part or the component that have a failure or trouble. Do not fix and reuse it.
- Delete the past malfunction code after recording. Then conduct a diagnosis again to check for present failures.
- Delete the past failure memory after completion of a diagnostic analysis.

## 1. ILLUSTRATION OF CONNECTOR AND MEASUREMENT ON TERMINAL

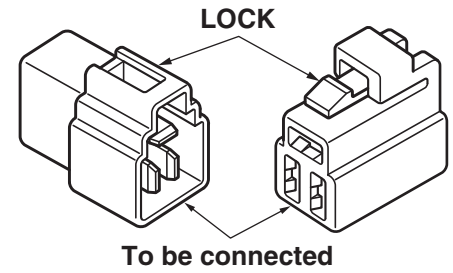


### ILLUSTRATION OF CONNECTOR

**The illustration of a connector contained in this document represents an image of a connector with its lock positioned on top as viewed from the connecting face.**

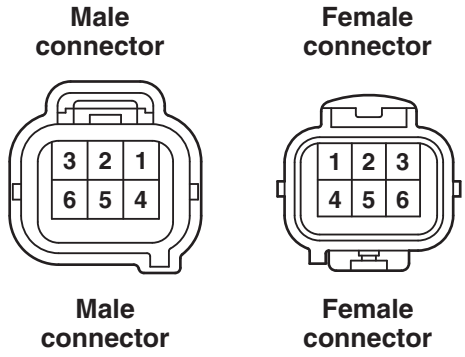


### NUMBERING OF CONNECTOR TERMINALS

**The terminals are symmetrically numbered (symmetrically reversed numbering) as viewed on the connecting faces of a pair of connectors.**
**The terminal #1 is located at the top right corner of a male connector and at the top left corner of a female connector respectively in this document.**

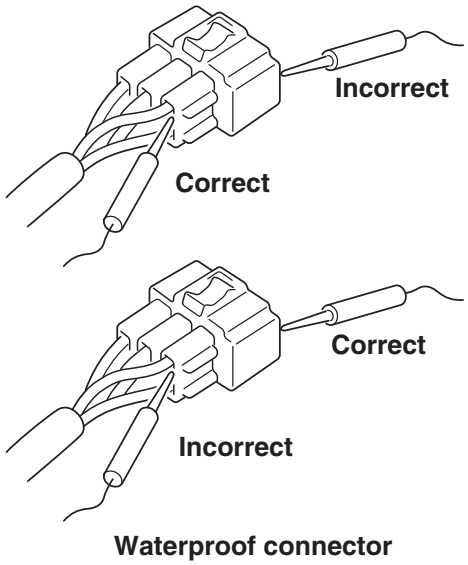


### PRECAUTIONS FOR TERMINAL MEASUREMENT

**Unless otherwise specified in this document, the illustration of a connector represents an image of a connector as viewed from the connecting face. A test probe must access the back face of a connector.**
**However, some types of connector do not allow a test probe to contact with the back face such as a waterproof connector. In such case, a test probe may be allowed to access the front face of a connector but a special care must be used to avoid a risk of damage in terminals.**

**As to a connector that is designed to use the signal check harness for terminal measurement, do not place a test probe directly onto the front or back face. Use a contact box of the connected signal check harness to take measurement on terminals.**

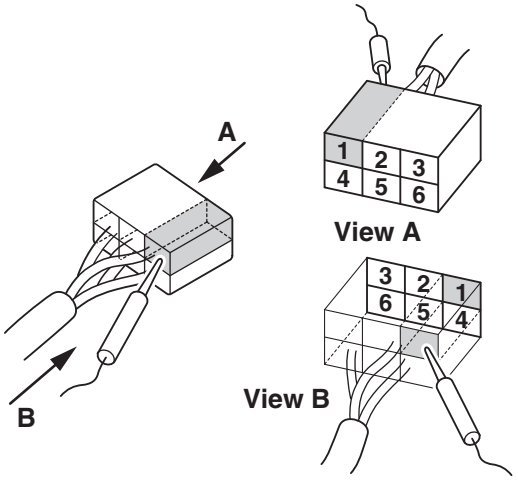


### ILLUSTRATION OF CONNECTOR AND MEASUREMENT SURFACE

**The illustration of a connector contained in this document represents an image of a connector as viewed from the connecting face. For example, the terminal #1 of a female connector is located at the top left corner of a connector as viewed from the connecting face.**
**In actual measurement on the terminal #1 of a female connector, a test probe must be placed onto the top right corner on the back face of a connector.**

SAPH16F010300001

# SYSTEM BLOCK DIAGRAM

EN01H16F01030F03001002

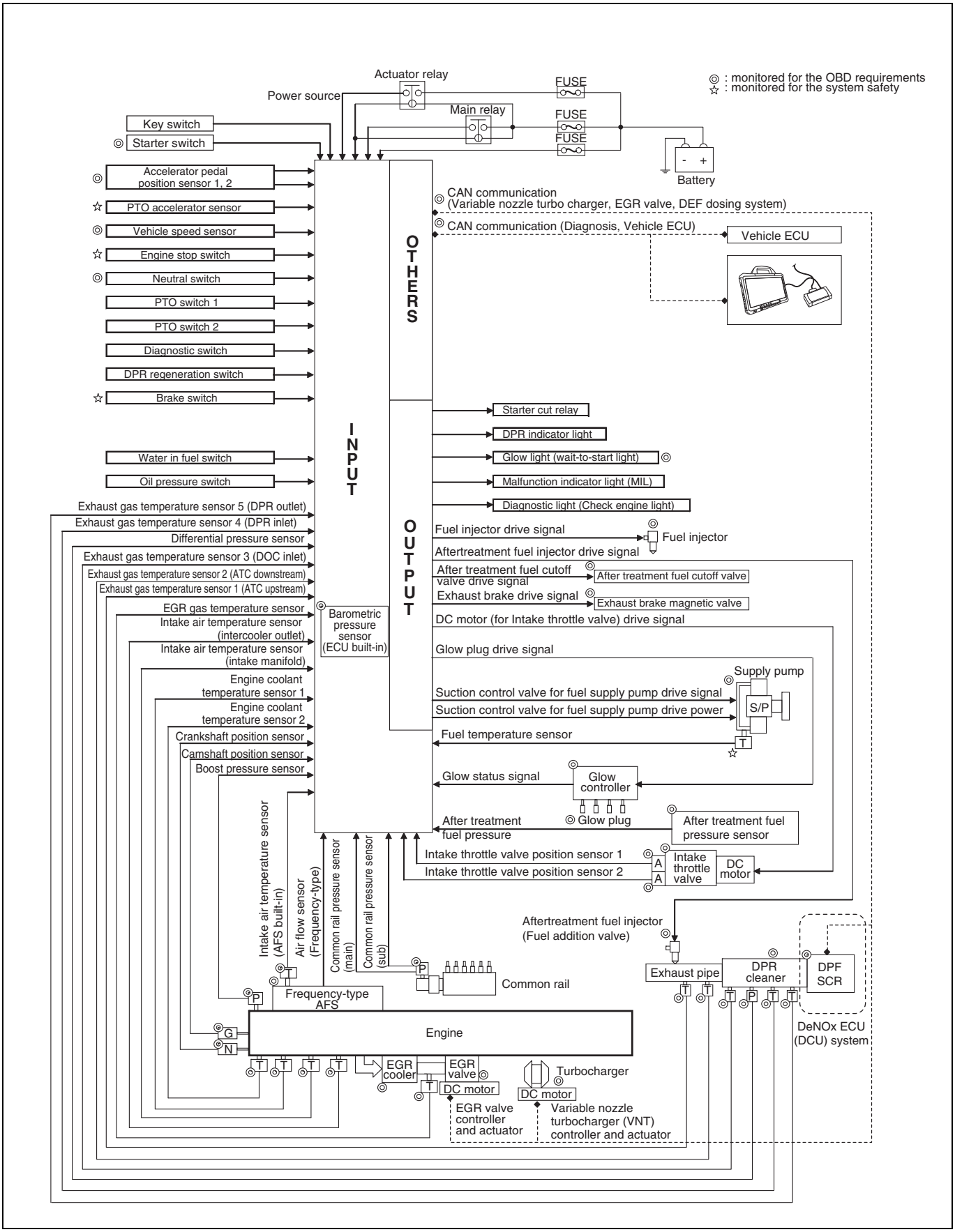


SAPH16F010300002

# SYSTEM DIAGRAM

EN01H16F01030F03001003

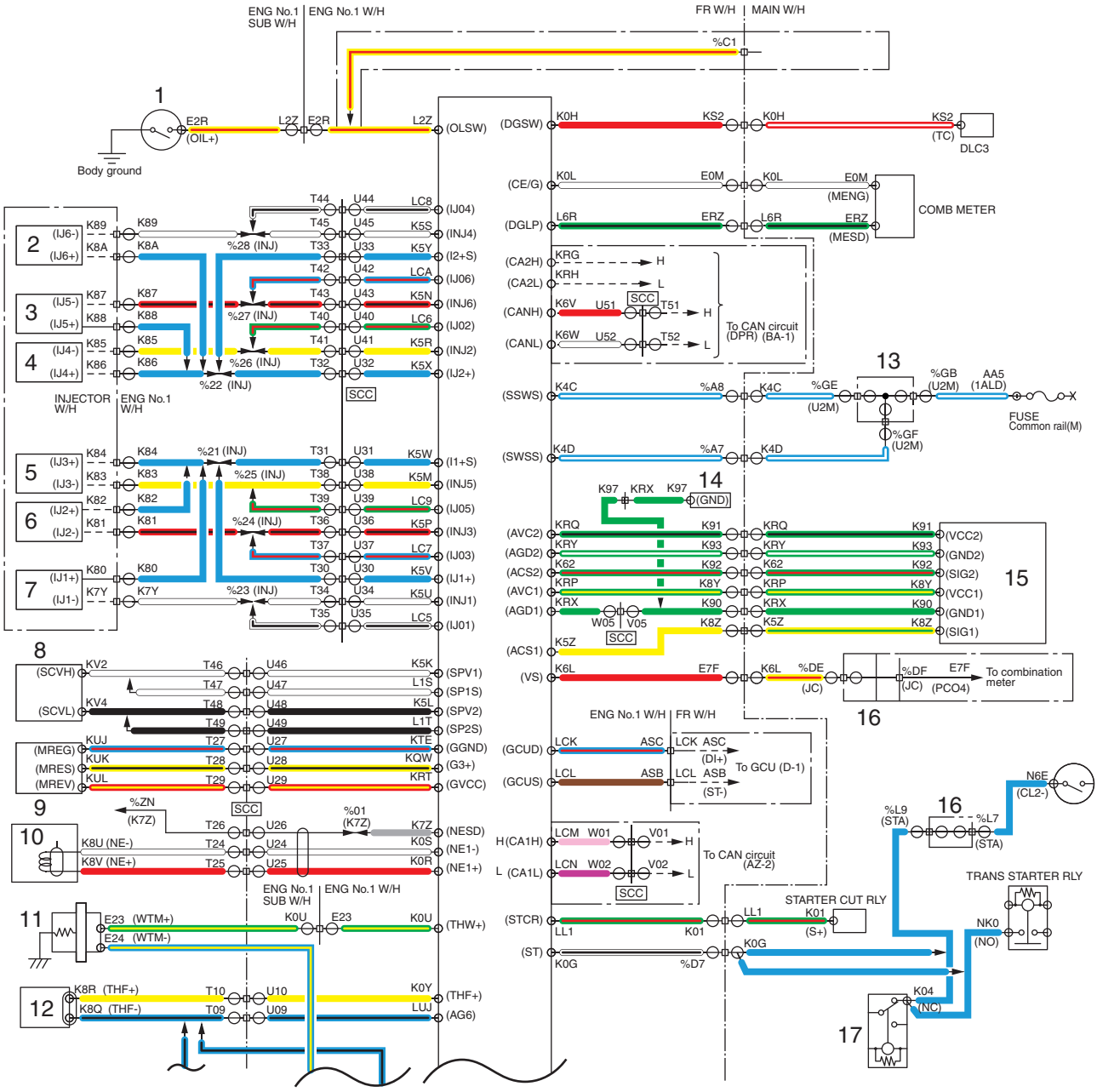


1 . Oil pressure switch
2 . Injector 6
3 . Injector 5
4 . Injector 4
5 . Injector 3
6 . Injector 2
7 . Injector 1
8 . Suction control valve
9 . Engine speed sub sensor (cylinder angle sensor)
10 . Engine speed main sensor (crankshaft position sensor)
11 . Engine coolant temperature sensor 1
12 . Fuel temperature sensor
13 . Common rail J/C No.1
14 . PTO accelerator sensor
15 . Accelerator sensor
16 . Common rail J/C No.2
17 . Starter cut relay
18 . Common rail pressure sensor (main, sub)
19 . Intake air temperature sensor (intake manifold)

SAPH16F010300003

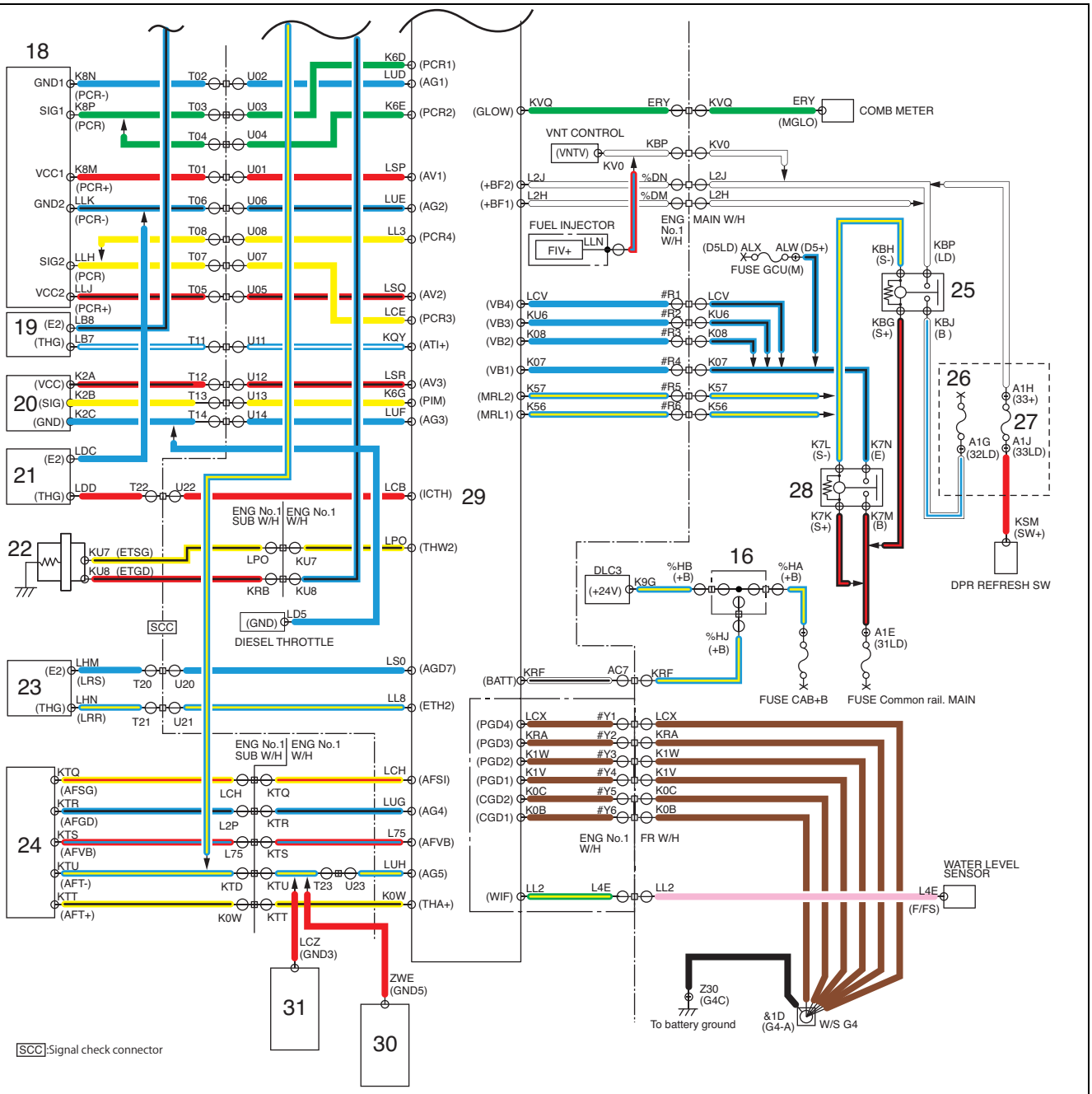


20 . Boost pressure sensor
21 . Intake air temperature sensor (intercooler outlet)
22 . Engine coolant temperature sensor 2
23 . EGR exit temperature sensor
24 . Air flow sensor
25 . Common rail actuator power relay
26 . Fuse common rail actuator
27 . Fuse common rail actuator 2
28. Engine ECU main relay
29 . Engine ECU
30 . Exhaust gas temperature sensor 1 (ATC upstream)
31 . Exhaust gas temperature sensor 2 (ATC downstream)

SAPH16F010300004

# PRECAUTIONS

EN01H16F01030F03001004

**⚠ WARNING**
**Approximately 110 V is generated for the injector drive actuation system. For this reason, electrical shock may result if the injector drive circuit is touched directly by hand. Turn the starter switch to the LOCK position if it is necessary to check or repair the computer, harnesses, or connectors.**

**1. BE CAREFUL NOT TO LET DIRT OR DUST GET INSIDE THE ACTUATOR OR MAGNETIC VALVES.**

**2. HARNESS WIRE CONNECTOR.**

(1) Multi-contact connectors suitable for the small electrical signals of electronic circuitry are used for wiring connections to the sensors, actuator and control unit. Be very careful when handling them.

- Before disconnecting any connectors, make sure that the starter switch is in "LOCK" position.
- When disconnecting connectors, try to pull them out in a straight line, disengaging the lock and holding onto the housing.
- Do not try to disconnect connectors by gripping the wires or twisting them, as this could bend the contacts.
- Do not disconnect connectors unnecessarily.
- When using a circuit tester, apply the tester probe to the harness wire side only. Never stick the tester probe into the holes on the connector terminal side, as this could cause poor contacts when the connector is reconnected.

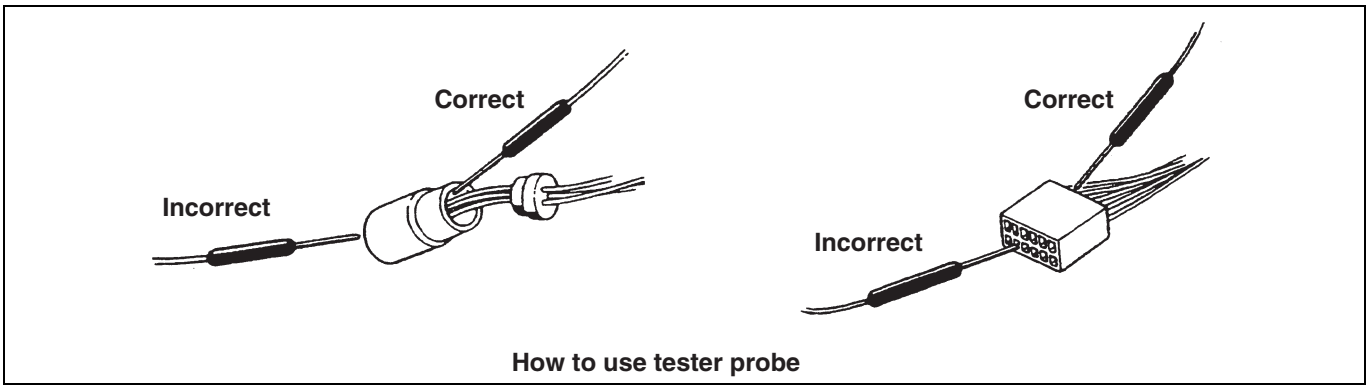


**How to use tester probe**

SAPH16F010300005

- Do not let water, oil or dust get on the connector when it is disconnected, as this could cause poor contacts when the connector is reconnected.
- Do not open the control unit cover. It could malfunction if dust or water gets inside.
- Take care to ensure that water, oil or dust do not get on or inside parts.
- When connecting in connectors, push them in all the way and make sure that the lock engages.

**3. ERASING THE MALFUNCTION MEMORY STORED IN THE PAST, CHECK THE CURRENT MALFUNCTION BY PERFORMING A DIAGNOSIS OF THE PRESENT MALFUNCTION AGAIN**

**4. AFTER COMPLETING THE MALFUNCTION ANALYSIS, ERASE THE MALFUNCTION MEMORY STORED IN THE PAST. OTHERWISE, THE MALFUNCTION LIGHT IN THE DISPLAY WILL REMAIN LIT**

**5. CONNECTOR DRAWING, ALL OF WHICH HAS A VIEW TO BE SEEN FROM THE CONNECTION SIDE, INSERT THE TESTING LEAD FROM THE BACKSIDE**

**6. USING A CIRCUIT TESTER**

- Use a circuit tester with an internal resistance of 100 kΩ or greater in the voltage measuring range.

**7. USING A SIGNAL CHECK HARNESS**

- To prevent breakage of the ECU connector, connect the signal check harness and perform measuring by bringing the test lead into contact with the signal check harness side (contact box).

**NOTICE**

**The terminal numbers in the text and in the illustrations correspond to the table on the next page (computer pin assignment) as shown below.**

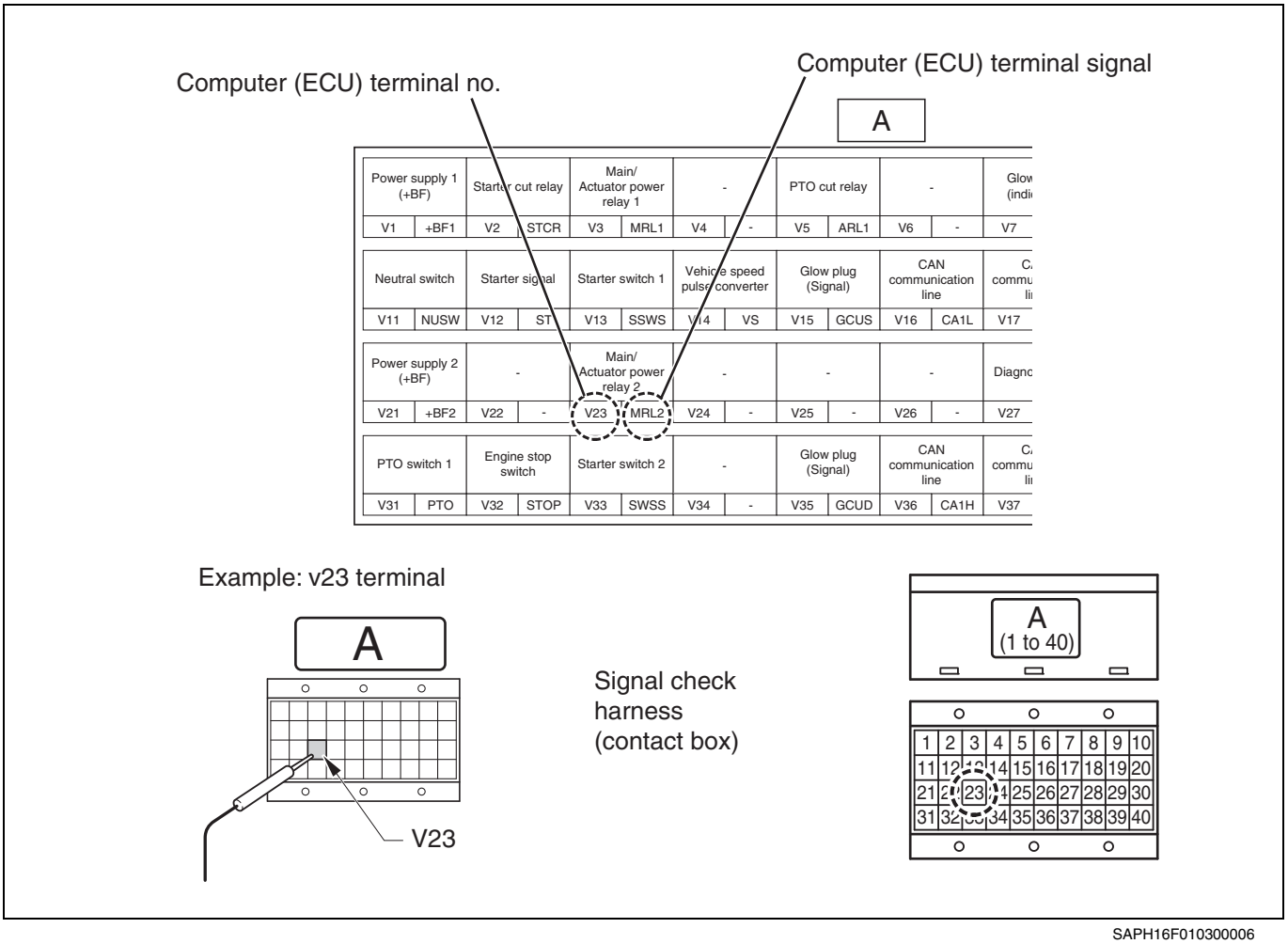


SAPH16F010300006

**8. CONNECT THE SIGNAL CHECK HARNESS**

(1) Set the starter switch to the "LOCK" position and disconnect the connectors from the engine harness.

(2) Connect the signal check harness to the engine sub harness and the connecting parts to the vehicle in the junction box.
**SST: Signal check harness (09843-E4080)**

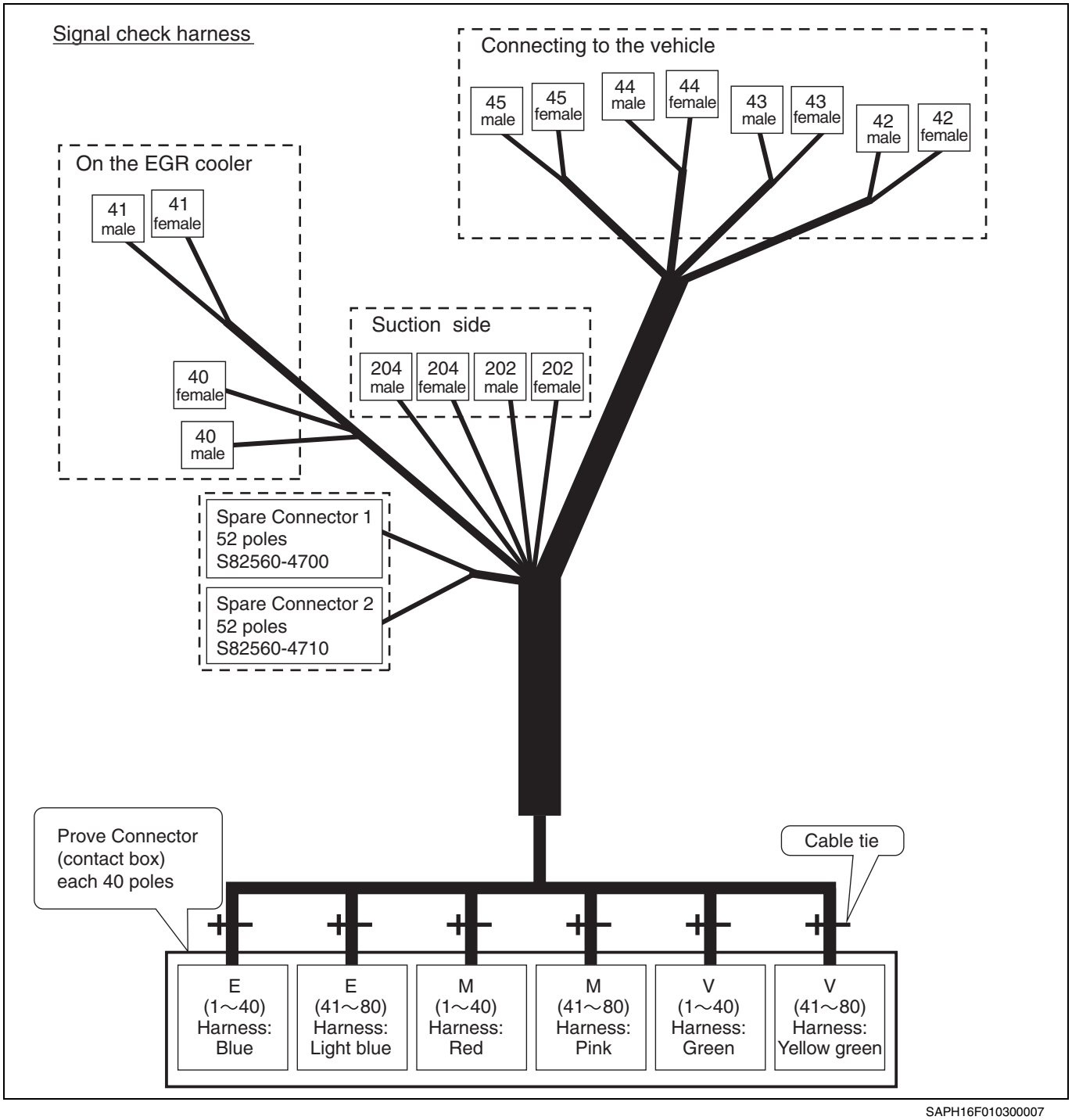


SAPH16F010300007

Measuring map (upside view)

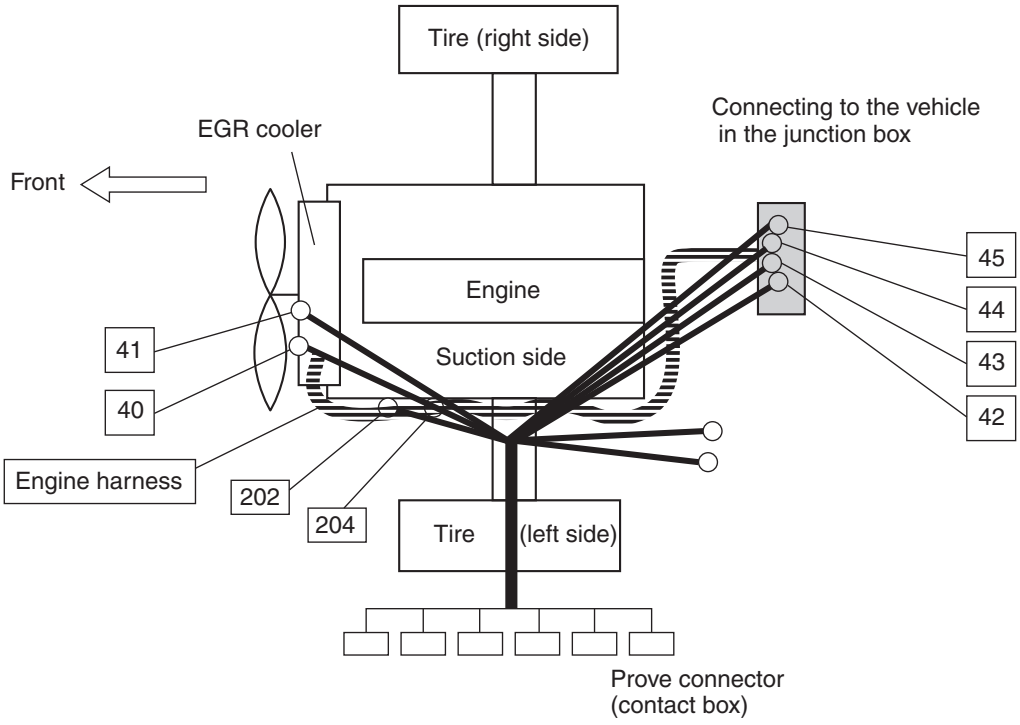


SAPH16F010300008

# SENSOR LOCATION

EN01H16F01030F03001005

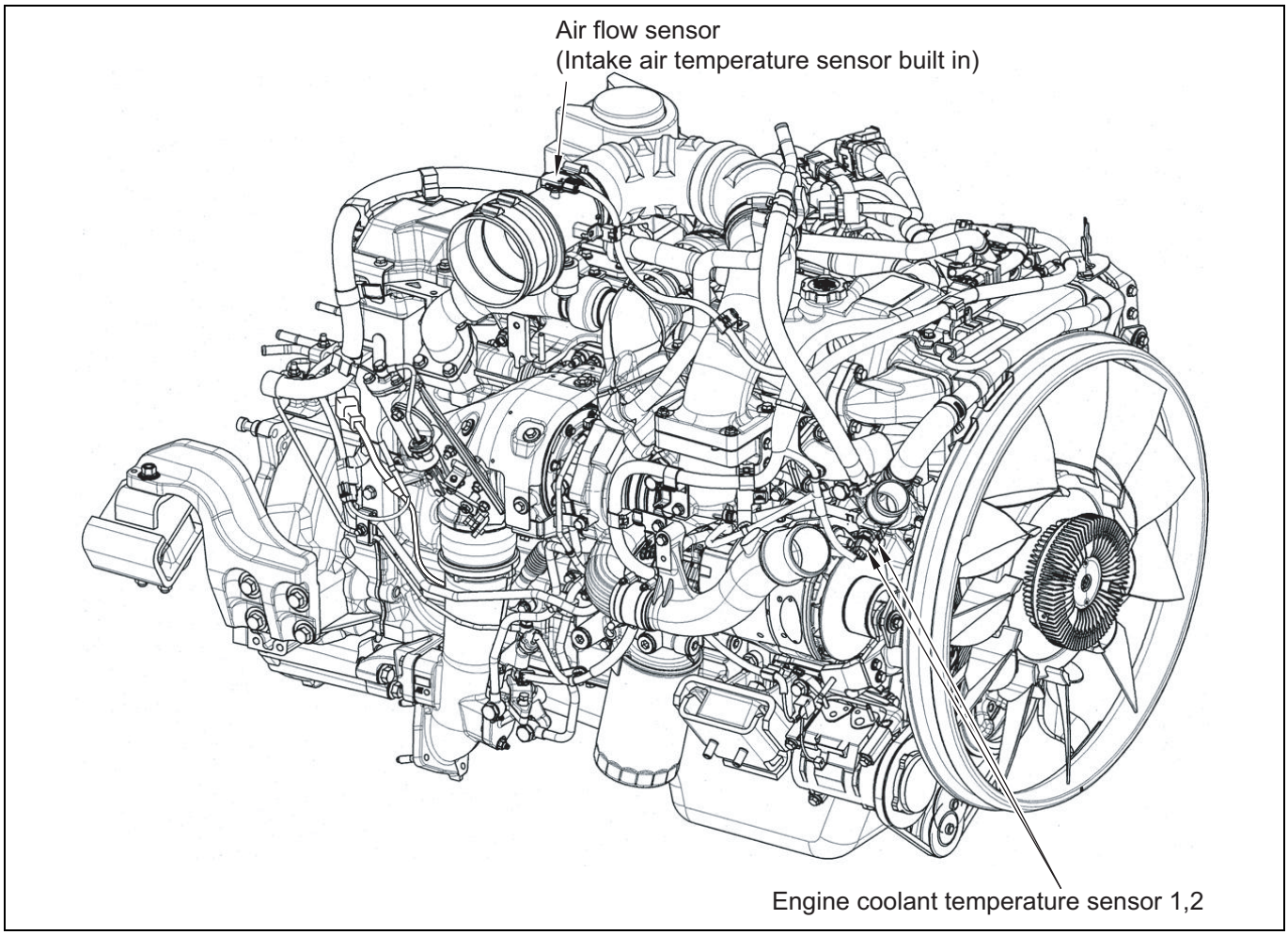


SAPH16F010300009

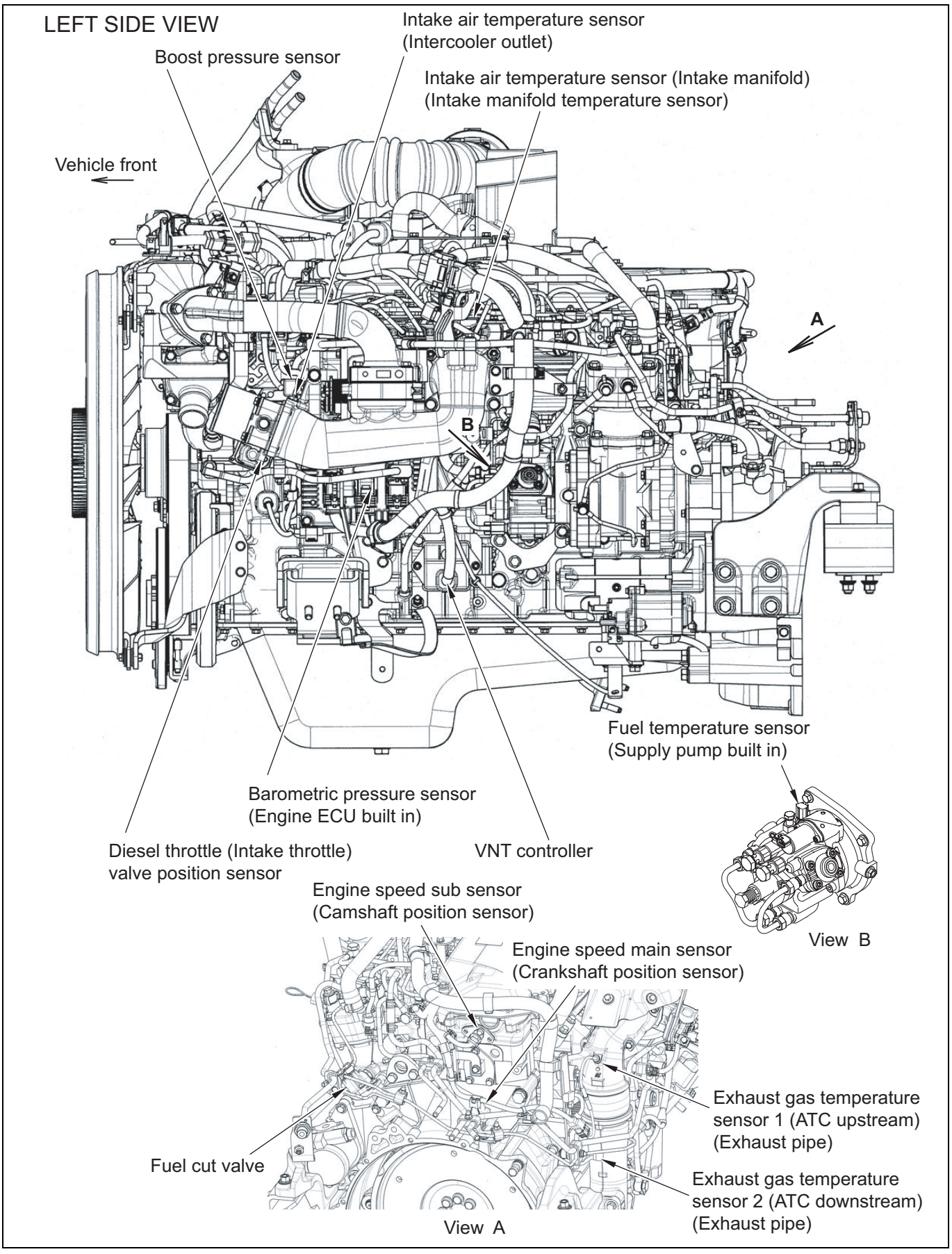


SAPH16F010300010

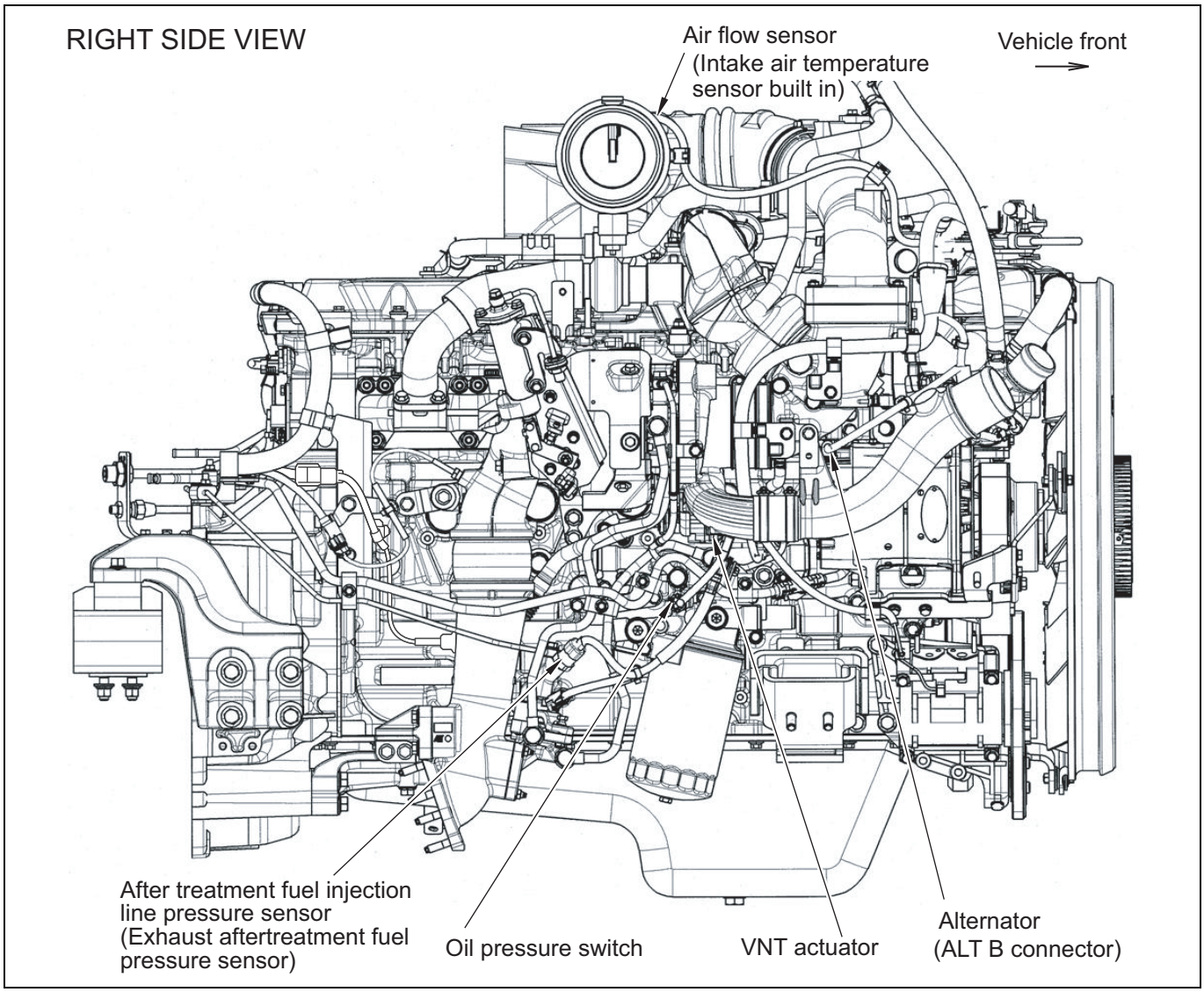


SAPH16F010300011

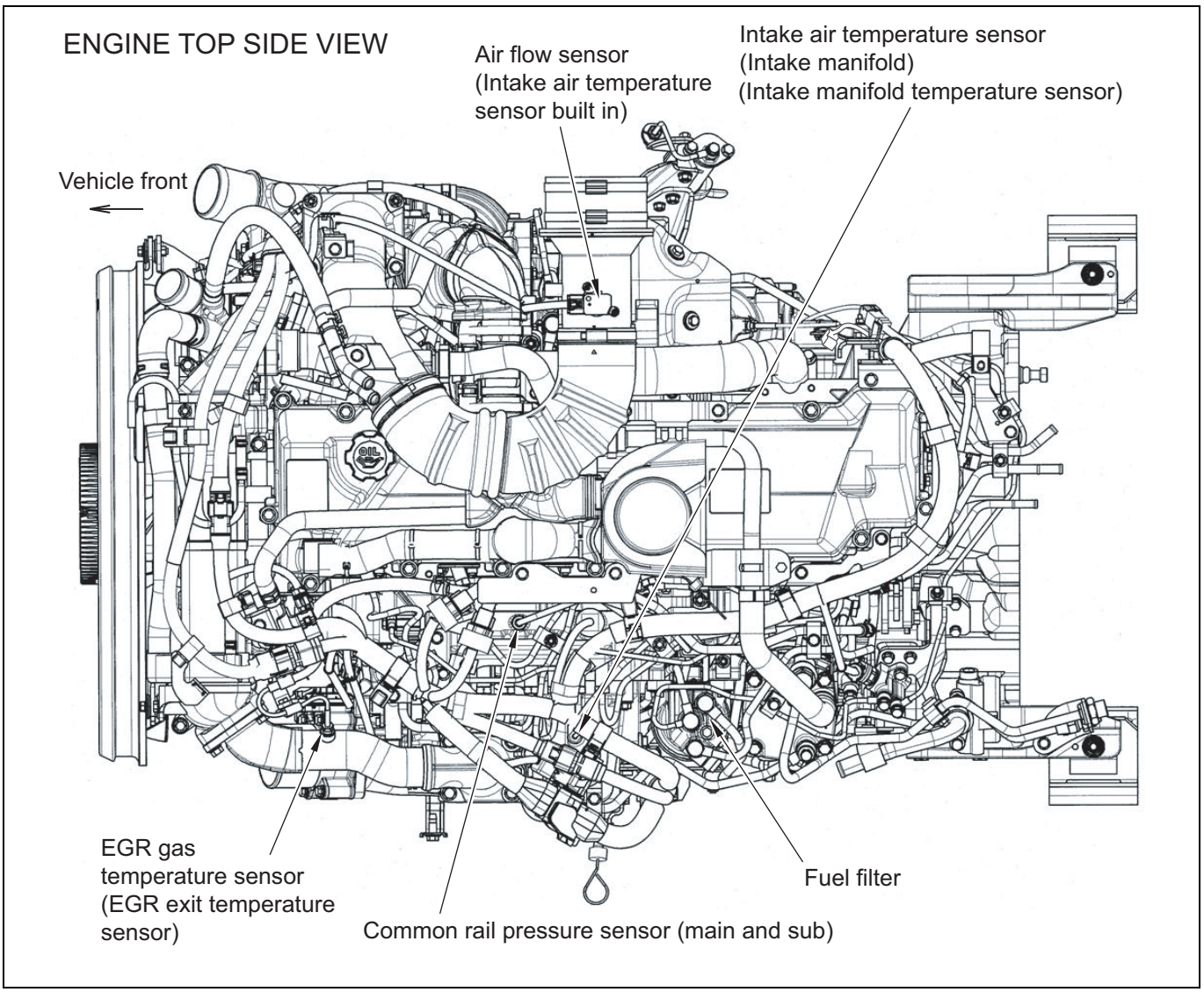


SAPH16F010300012

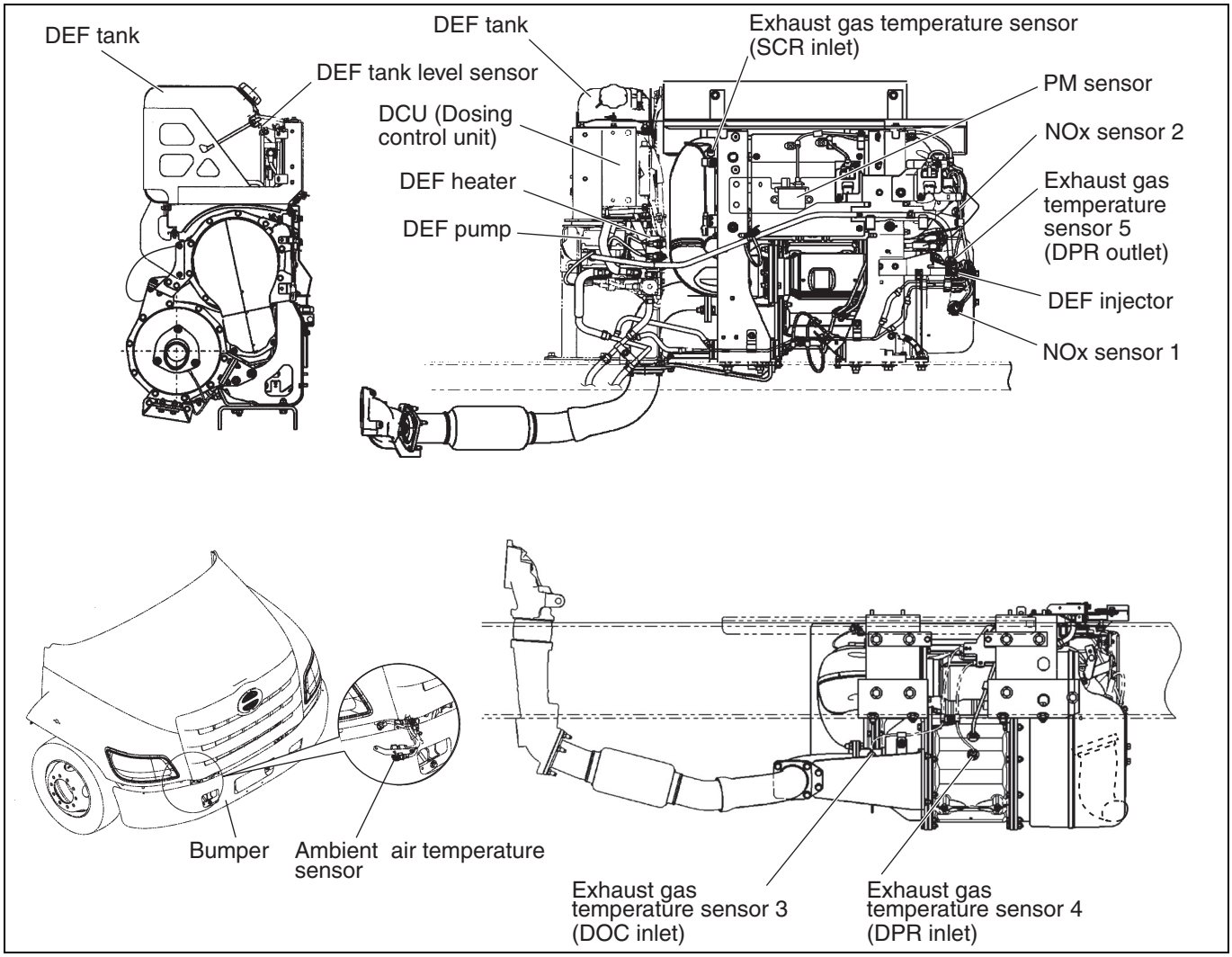


SAPH16F010300013

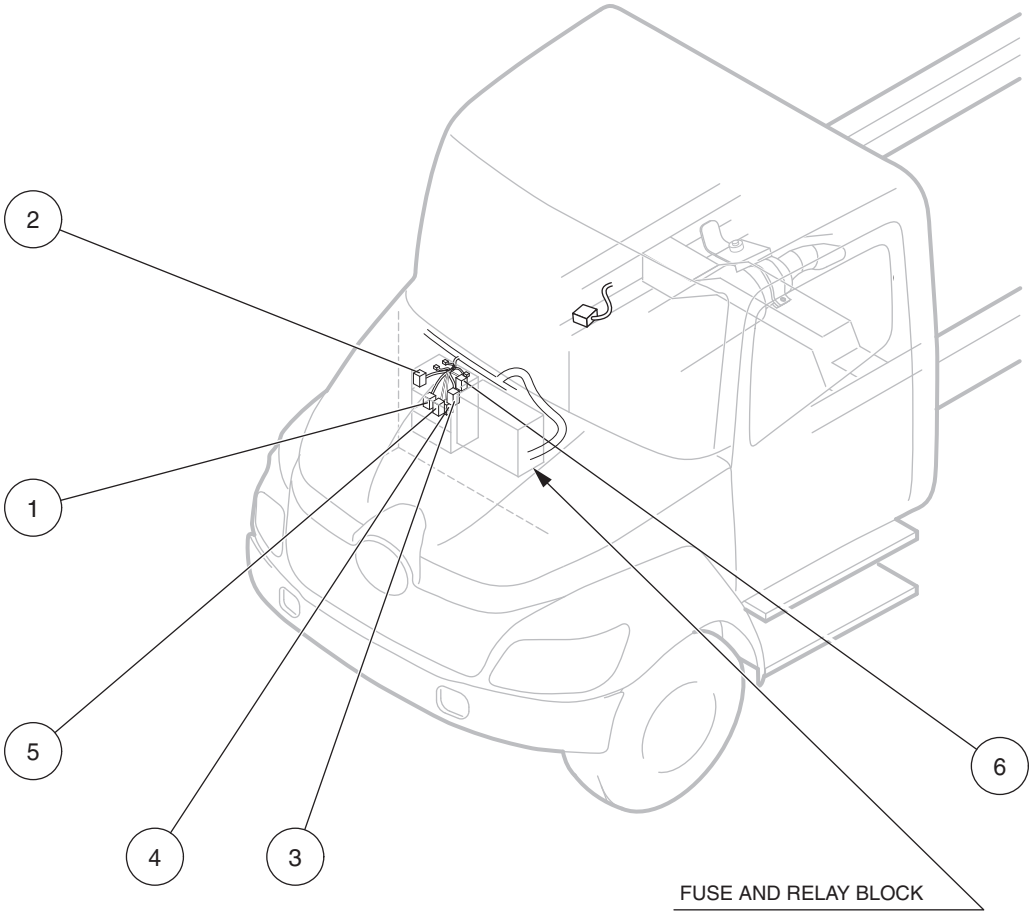


1: J/C SIGNAL
2: Common rail J/C No.1
3: Common rail J/C No.2
4: CAN J/C 2 High
5: CAN J/C 2 Low
6: CAN TMN6

SAPH16F010300014

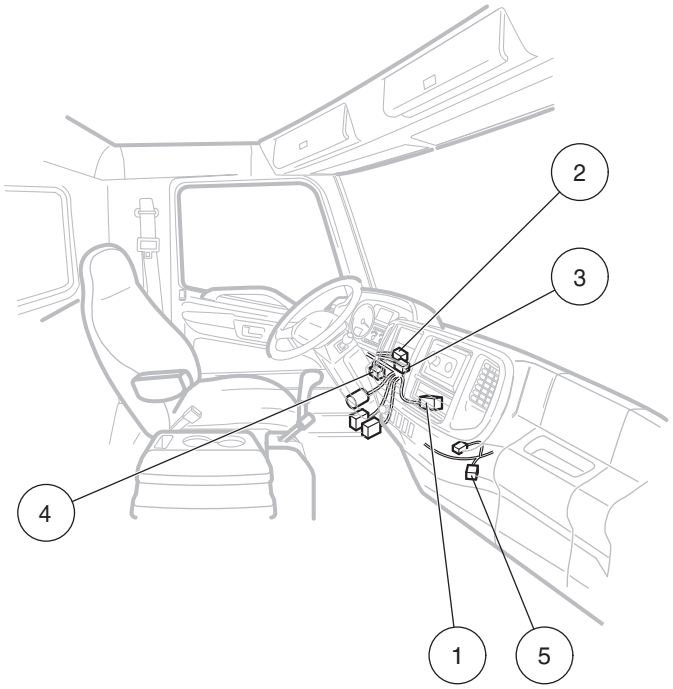


1: J/C GROUND
2: J/C GROUND 4P
3: CAN J/C 3 High
4: CAN J/C 3 Low
5: CAN J/C

SAPH16F010300015

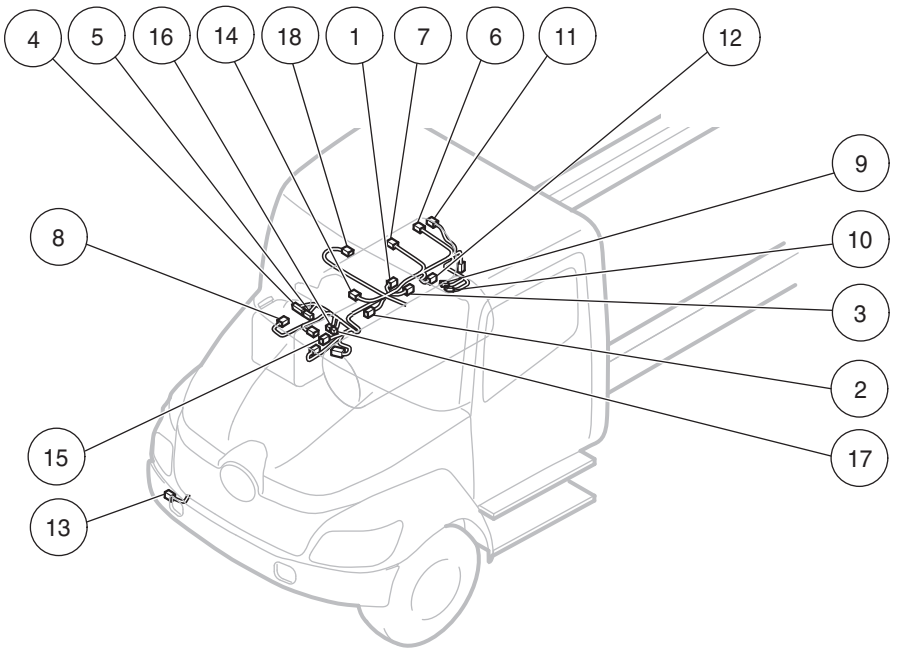


1: Common rail CAN J/C No.1
2: Common rail CAN J/C No.2
3: Common rail CAN J/C No.3
4: DCU 53P
5: DCU 86P
6: NOx sensor 1
7: NOx sensor 2
8: DEF sensor
9: Exhaust gas temperature sensor 3 (DOC inlet)
10: Exhaust gas temperature sensor 4 (DPR inlet)
11: Exhaust gas temperature sensor 5 (DPR outlet)
12: Differential gas pressure sensor
13: Ambient temperature sensor
14: SCR front temperature sensor
15: DEF heater 1
16: DEF heater 2
17: DEF heater 3
18: PM sensor

SAPH16F010300016

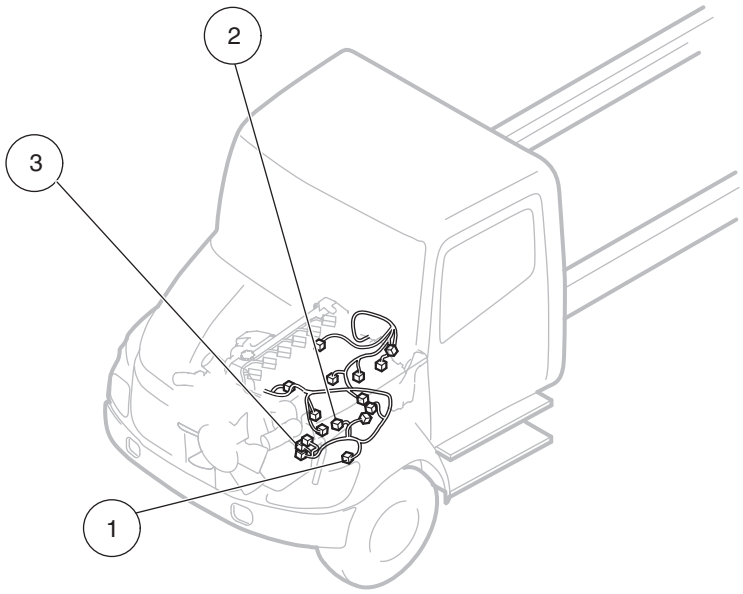


1: VNT controller
2: EGR controller
3: No.30 J/C

SAPH16F010300017

# COMPUTER (ECU) PIN ASSIGNMENT

EN01H16F01030F03001006

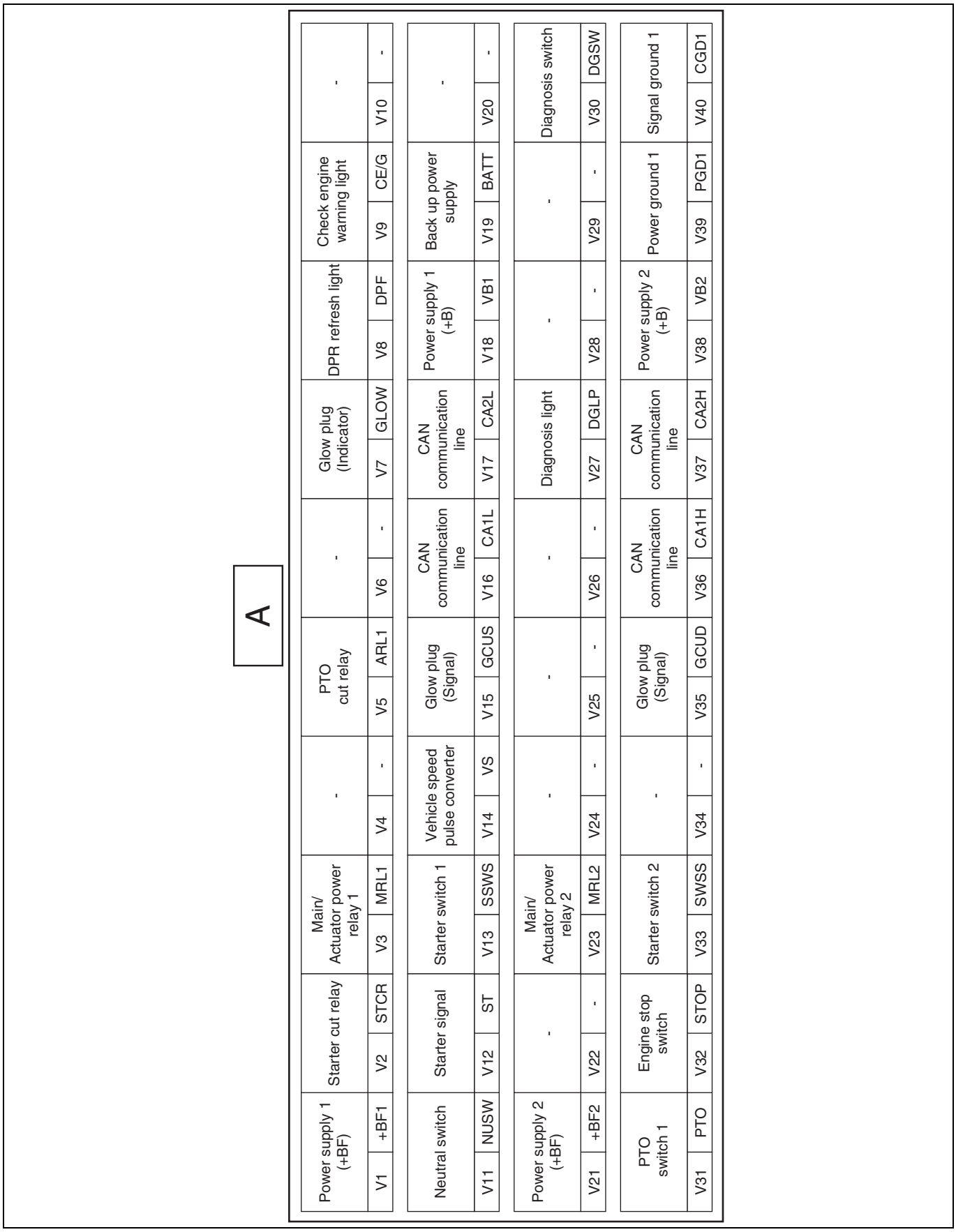


SAPH16F010300018

B

| - | | WIF signal | | - | | - | | Sensor ground 7 | | Sensor ground 9 | | Accelerator sensor 1 | | Aftertreatment fuel injection line pressure sensor | | Exhaust gas temperature sensor 3 (DOC inlet) | | Sensor power supply 3 | |
|---|---|---|---|---|---|---|---|---|---|---|---|---|---|---|---|---|---|---|---|
| V41 | - | V42 | WIF | V43 | - | V44 | - | V45 | AGD1 | V46 | AGD3 | V47 | ACS1 | V48 | FPR | V49 | ET2+ | V50 | AVC1 |

| Sensor power supply 4 | | - | | - | | - | | - | | DPR refresh switch | | Exhaust gas temperature sensor 5 (DPR outlet) | | Power supply 3 (+B) | | Power ground 2 | | Signal ground 2 | |
|---|---|---|---|---|---|---|---|---|---|---|---|---|---|---|---|---|---|---|---|
| V51 | AVC2 | V52 | - | V53 | - | V54 | - | V55 | - | V56 | DPSW | V57 | ET4+ | V58 | VB3 | V59 | PGD2 | V60 | CGD2 |

| - | | PTO switch 2 | | - | | - | | Sensor ground 8 | | - | | Accelerator sensor 2 | | PTO Accelerator sensor | | Exhaust gas temperature sensor 4 (DPR inlet) | | DPR differential pressure sensor | |
|---|---|---|---|---|---|---|---|---|---|---|---|---|---|---|---|---|---|---|---|
| V61 | - | V62 | BUSW | V63 | - | V64 | - | V65 | AGD2 | V66 | - | V67 | ACS2 | V68 | ASCS | V69 | ET3+ | V70 | EXPS |

| Sensor power supply 5 | | - | | - | | - | | Brake switch | | - | | - | | Power supply 4 (+B) | | Power ground 3 | | Power ground 4 | |
|---|---|---|---|---|---|---|---|---|---|---|---|---|---|---|---|---|---|---|---|
| V71 | AVC3 | V72 | - | V73 | - | V74 | - | V75 | BSW2 | V76 | - | V77 | - | V78 | VB4 | V79 | PGD3 | V80 | PGD4 |

SAPH16F010300019

C

| Intake throttle valve motor (+) | | - | | Exhaust brake magnetic valve | | - | | Aftertreatment fuel injector | | - | | - | | - | | Suction control valve (Main) | | Suction control valve (Main) | |
|---|---|---|---|---|---|---|---|---|---|---|---|---|---|---|---|---|---|---|---|
| E1 | MOT+ | E2 | - | E3 | EXB1 | E4 | - | E5 | FIV- | E6 | - | E7 | - | E8 | - | E9 | SPV1 | E10 | SPV2 |

| - | | Air flow sensor (Power) | | Sensor power supply 1 | | No.1 Fuel injector (Main) No.2 Fuel injector (Sub) | | No.1 Fuel injector (Main) | | No.2 Fuel injector (Main) | | No.3 Fuel injector (Main) | | No.4 Fuel injector (Main) No.5 Fuel injector (Sub) | | No.4 Fuel injector (Main) | | No.6 Fuel injector (Main) | |
|---|---|---|---|---|---|---|---|---|---|---|---|---|---|---|---|---|---|---|---|
| E11 | - | E12 | AFVB | E13 | AV1 | E14 | IJ1+ | E15 | INJ1 | E16 | INJ3 | E17 | INJ5 | E18 | IJ2+ | E19 | INJ2 | E20 | INJ4 |

| Intake throttle valve motor (-) | | Exhaust brake magnetic valve | | - | | - | | - | | - | | - | | - | | Suction control valve (Sub) | | Suction control valve (Sub) | |
|---|---|---|---|---|---|---|---|---|---|---|---|---|---|---|---|---|---|---|---|
| E21 | MOT- | E22 | KXB | E23 | - | E24 | - | E25 | - | E26 | - | E27 | - | E28 | - | E29 | SP1S | E30 | SP2S |

| Fuel cut valve | | - | | Sensor power supply 2 (PC sensor) | | No.2 Fuel injector (Sub) No.3 Fuel injector (Main) | | No.1 Fuel injector (Sub) | | No.2 Fuel injector (Sub) | | No.3 Fuel injector (Sub) | | No.5 Fuel injector (Sub) No.6 Fuel injector (Main) | | No.4 Fuel injector (Sub) | | No.6 Fuel injector (Sub) | |
|---|---|---|---|---|---|---|---|---|---|---|---|---|---|---|---|---|---|---|---|
| E31 | FCV | E32 | - | E33 | AV2 | E34 | I1+S | E35 | IJ01 | E36 | IJ03 | E37 | IJ05 | E38 | I2+S | E39 | IJ02 | E40 | IJ04 |

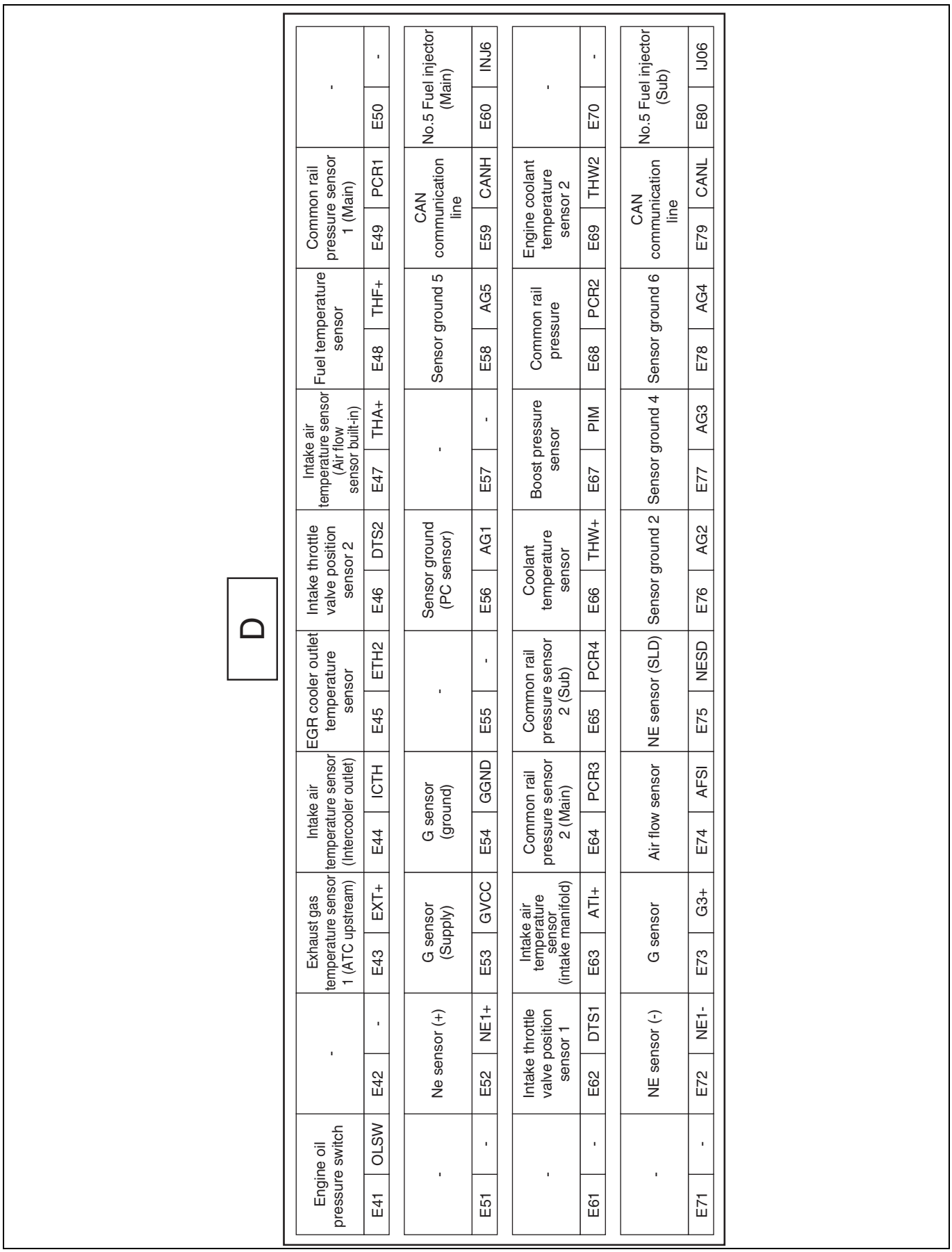


SAPH16F010300021

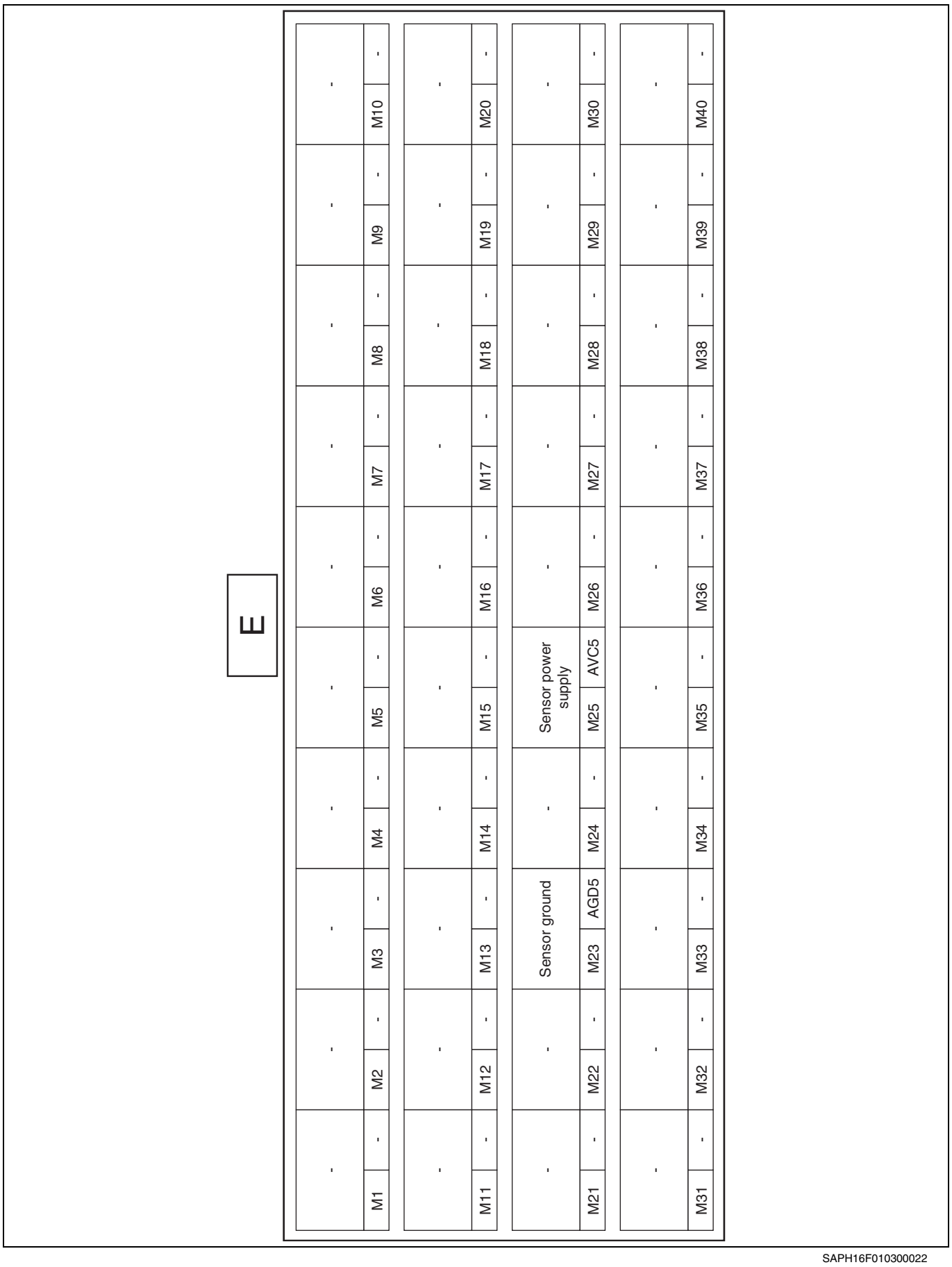


SAPH16F010300022

F

| - | | - | | - | | - | | - | | - | | - | | Exhaust gas temperature sensor 2 (ATC downstream) | |
|---|---|---|---|---|---|---|---|---|---|---|---|---|---|---|---|
| M41 | - | M42 | - | M43 | - | M44 | - | M45 | - | M46 | - | M47 | - | M48 | - | M49 | - | M50 | KR2 |
| Sensor power supply (Boost pressure sensor) | | Sensor power supply (Diesel throttle) | | - | | Sensor ground (Fuel temperature sensor) | | - | | Sensor ground (EGR cooler outlet temperature sensor) | | - | | - | | - | | - | |
| M51 | AV3 | M52 | AV4 | M53 | - | M54 | AG6 | M55 | - | M56 | AGD7 | M57 | - | M58 | - | M59 | - | M60 | - |
| - | | - | | - | | - | | - | | - | | - | | - | | - | | - | |
| M61 | - | M62 | - | M63 | - | M64 | - | M65 | - | M66 | - | M67 | - | M68 | - | M69 | - | M70 | - |
| - | | - | | - | | - | | - | | - | | - | | - | | - | | - | |
| M71 | - | M72 | - | M73 | - | M74 | - | M75 | - | M76 | - | M77 | - | M78 | - | M79 | - | M80 | - |

SAPH16F010300023

# ENGINE ECU CONNECTOR

EN01H16F01030F03001007

## REMOVING THE ENGINE ECU CONNECTOR

**NOTICE**

**Before replacement, wait until the engine cools down as you may get burned. (Turn the starter switch to the "LOCK" position and leave it for more than 30 minutes to cool.)**

**1. CLEANING THE ENGINE ECU CONNECTOR**

(1) Check that the engine ECU connector is completely connected to the engine ECU.

(2) Directly spray water around the engine ECU connector by using a small spray bottle.

**NOTICE**

**Do not remove the connector while at work.**

**HINT**

**If it is much dirty, squirt water at the connector sliding portion and connector surface.**

(3) Blow air around the engine ECU connector and engine ECU surface to remove dirt and foreign matter.

**NOTICE**

- **Do not remove the connector while at work.**
- **Blow off water with air as much as possible for drying.**

(4) Using a small brush, carefully remove dirt and foreign matter remaining at the sliding portion.

**NOTICE**

**Do not remove the connector while at work.**

(5) Using a waste cloth, wipe off around the engine ECU connector and engine ECU surface.

**NOTICE**

- **Do not remove the connector while at work.**
- **Wipe up water thoroughly.**

(6) If you feel the movement of the lever unsmooth, repeat steps (1), (2), (3), (4) and (5).

(7) Disconnect the engine ECU connector and check it for deposition of dirt and foreign matter.

a. Set the hook of the connector in the direction of the arrow to release the lock.

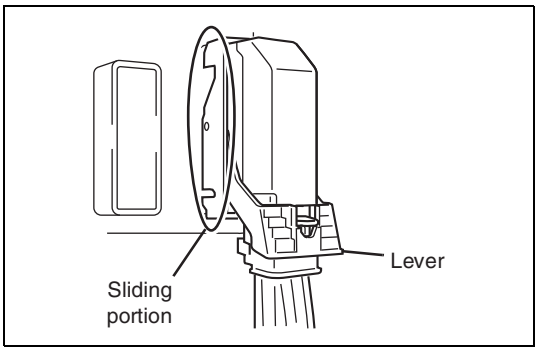


SAPH16F010300024

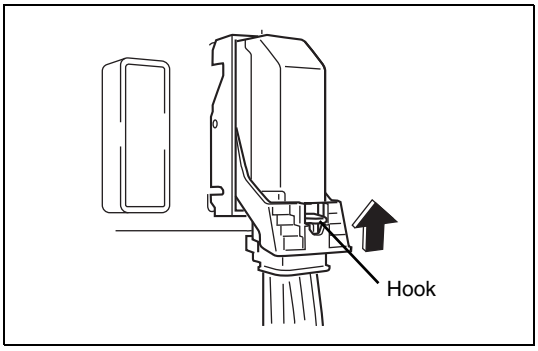


SAPH16F010300025

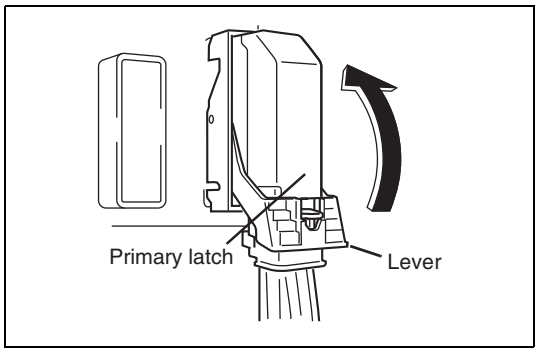


SAPH16F010300026

b. While pushing the primary latch of the connector, move the lever in the direction of the arrow as shown in the figure until a "click" is heard and then detach the connector.

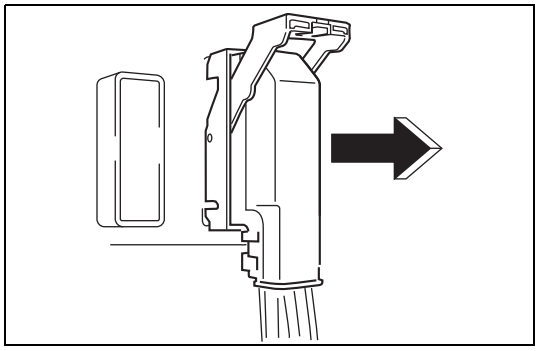

SAPH16F010300027

c. Pull out the connector straight.

**NOTICE**

- **Do not insert and remove the connector more than necessary.**
- **Do not give shocks to the engine ECU.**
- **Never detach the harness by holding and pulling or prying as it may result in wire or terminal deformation.**
- **Never insert a test lead from the rear of the connector.**
- **Do not paint or apply grease or oil to the connector to maintain its function and durability.**

**HINT**

**If it cannot be pulled out with a light force, check if the lever is fully open.**

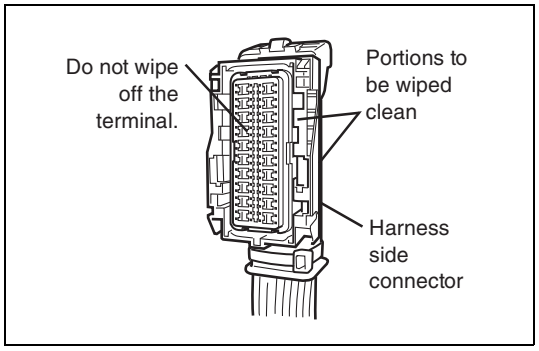


SAPH16F010300028

(8) If the side of the harness side connector is found dirty, wipe it off with a moistened waste cloth while being careful not allowing dirt and foreign matter to drop.

**NOTICE**

- **Use a thoroughly wrung waste cloth.**
- **Do not wipe off the terminal opening.**
- **Do not directly spray water.**

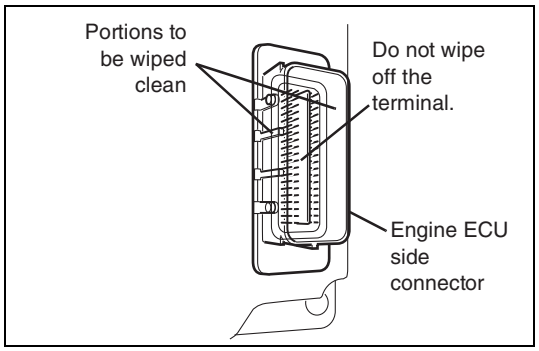


SAPH16F010300029

(9) If the engine ECU side connector is found dirty, wipe off its side with a moistened waste cloth.

**NOTICE**

- **Use a thoroughly wrung waste cloth.**
- **Do not wipe off the terminal opening.**
- **Do not directly spray water.**

(10) Blow air on the terminal part inside the engine ECU side connector to remove dirt and foreign matter.

## MOUNTING THE ENGINE ECU CONNECTOR

**1. Attaching the engine ECU connector**

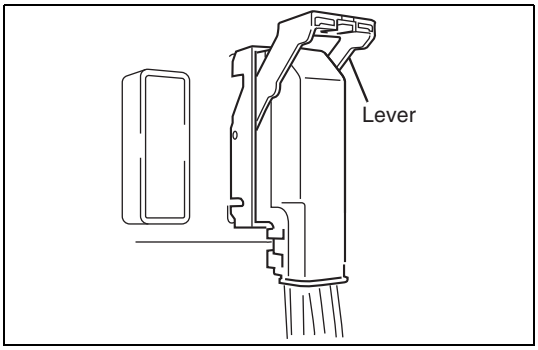


SAPH16F010300030

(1) Check that the harness side connector lever is fully open and place it straight on the engine ECU side connector.

**NOTICE**
**At this time, check that the lever is fully open.**

**HINT**
**Check that it is inserted along the wrong fitting prevention keyway.**

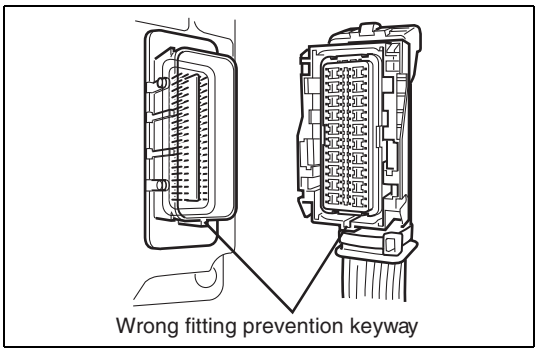


SAPH16F010300031

(2) Press the upper part of the harness side connector and insert the connector uniformly.

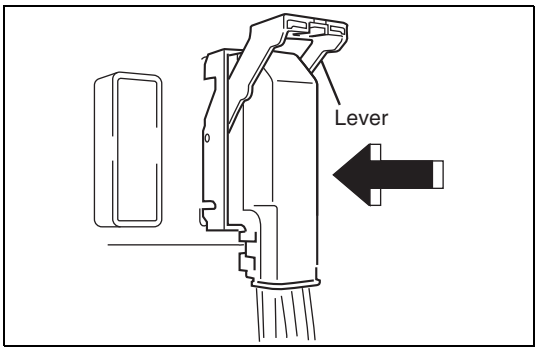


SAPH16F010300032

(3) Move the lever in the direction of the arrow as shown in the figure until a "click" is heard and attach the connector.

**NOTICE**
**If the lever cannot move smoothly, repeat steps (1) and (2). Also drop a few drops of water to the sliding portion to make it smooth.**

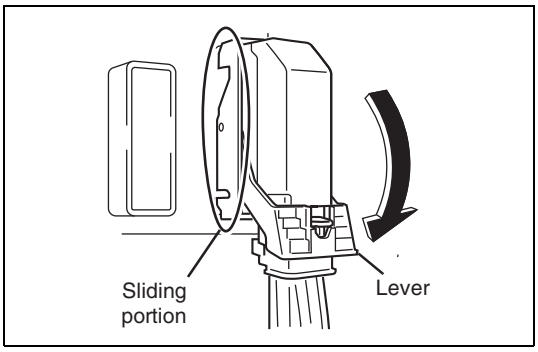


SAPH16F010300033

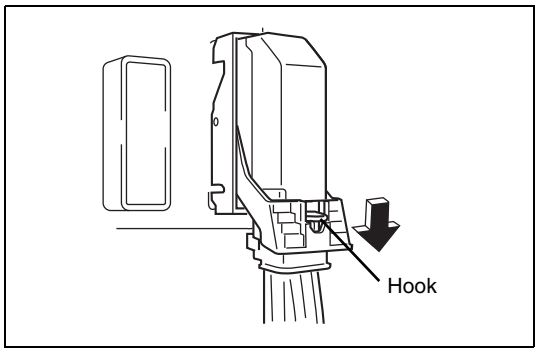


SAPH16F010300034

(4) Move the hook in the direction of the arrow as shown in the figure until a "click" is heard in order to lock the connector.

# INSPECTION

EN01H16F01030F03001008

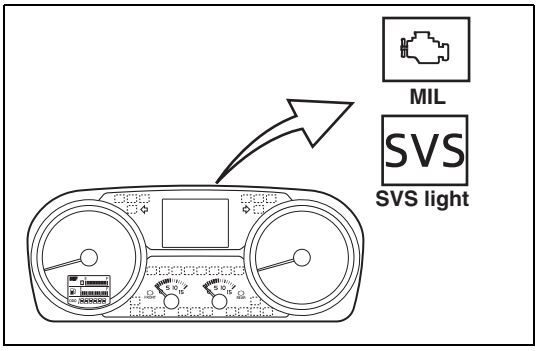


SAPH16F010300035

**1. PRIOR CHECK**

(1) Set the starter switch to the "ON" position (do not start the engine) and confirm that the check engine light in the indicator area lights up.

**HINT**

- **If the MIL (Malfunction Indicator Light) is lit, perform a system check to see if the malfunction is of the past or present.**
- **In the case of the past malfunction, this light will turn off if a status is judged to be normal in 3 times of driving.**
- **DTC must be cleared on HINO DX II , after MIL turns off.**

**(DEFINITION OF 1 TIME OF DRIVING)**

**a. Begins with engine start and ends with engine shut off.**

**b. Begins with engine start and ends after four hours of continuous engine-on operation.**

**c. Begins at end of the previous four hours of continuous engine-on operation and ends after four hours of continuous engine-on operation.**

**d. Begins at the end of the previous four hours of continuous engine-on operation and ends with engine shut off.**

- **Since the normal judgment method and time differ according to the malfunction code, a proper definition will be selected from the above 4 definitions.**
- **If the MIL does not go out, the system is abnormal. Check the system according to diagnosis on the following page.**

## MIL (MALFUNCTION INDICATOR LIGHT) ILLUMINATION PATTERN

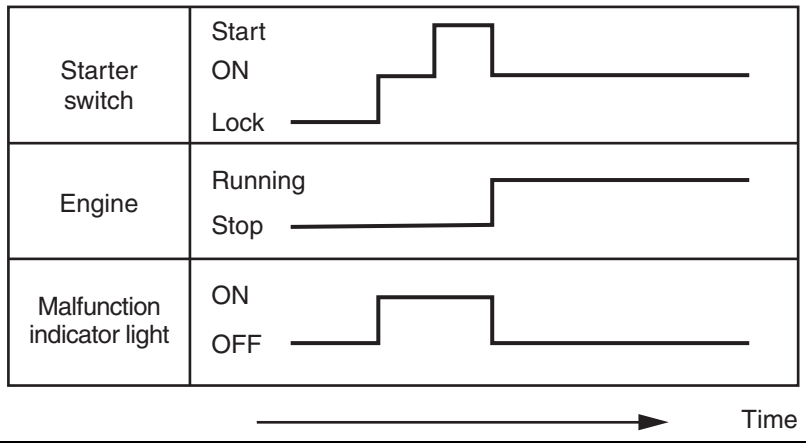


SAPH16F010300036

# DIAGNOSIS USING THE PC DIAGNOSIS TOOL

EN01H16F01030F03001009

## 1. DIAGNOSIS TOOL

(1) Trouble diagnosis can be performed using the PC diagnosis tool. By connection to the trouble diagnosis connector, the trouble location is indicated.

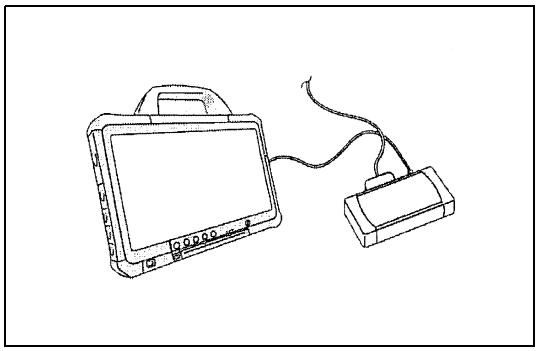

SAPH16F010300037

**PC:**
**Laptop computer**
**Complete function of HINO DX II is conformed on "Panasonic CF-D1".**

**SST:**
**Computer interface**
**(DENSO DST-i set without LCD)**
**Without Bluetooth® (95171-01021)**
**With Bluetooth® (95171-01041)**
**(DENSO DST-i set with LCD)**
**Without Bluetooth® (95171-01031)**
**With Bluetooth® (95171-01051)**
**Diagnosis software: Hino Diagnostic explorer II (HINO DX II )**

**NOTICE**
**Only ECU reprogramming can be performed by authorized HINO dealer.**

## 2. CONNECT THE PC DIAGNOSIS TOOL

(1) Turn the starter switch to the "LOCK" position.
(2) Connect the PC diagnosis tool to the trouble diagnosis connector on the left side of steering column.

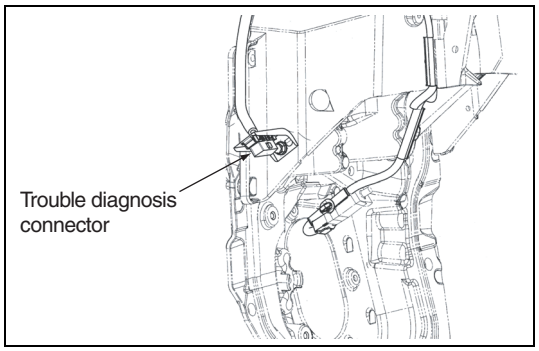


SAPH16F010300038

# DIAGNOSTIC TROUBLE CODE (DTC) TABLE

EN01H16F01030F03001010

| DIAGNOSTIC TROUBLE CODE (DTC) TABLE | | | | | | |
|---|---|---|---|---|---|---|
| **MIL** | **SVS LIGHT** | **DTC NO.** | **2 DIGIT DIAGNOSIS CODE** | **DIAGNOSIS ITEM** | **INSPECTION ITEM** | **REFER PAGE** |
| Light | No light | P0005 | – | Fuel Cut Valve stuck closed | • Fuel cut valve | 4-68 |
| Light | No light | P0006 | – | Malfunction of fuel cut valve (Low) | • Fuel cut valve<br>• Wire harness<br>• ECU (ECU connector) | 4-72 |
| Light | No light | P0007 | – | Malfunction of fuel cut valve (High) | • Fuel cut valve<br>• Wire harness<br>• ECU (ECU connector) | 4-72 |
| Light | No light | P0016 | – | Crankshaft position sensor and Camshaft position sensor - rationality | • Cam gear<br>• Flywheel<br>• Crankshaft position sensor<br>• Camshaft position sensor | 4-77 |
| Light | No light | P0027 | – | Exhaust Brake Performance | • Exhaust brake valve | 4-80 |
| Light | No light | P003A | – | Initialization failure (VNT actuator initialize error) | • VNT controller<br>• Turbocharger | 4-85 |
| Light | No light | P0045 | – | DC motor open circuit (VNT actuator motor open circuit) | • Turbocharger<br>• VNT controller<br>• Wire harness | 4-90 |
| Light | No light | P0047 | – | DC motor terminal short circuit, DC motor short circuit (Short to Battery) (VNT actuator motor short to BATT) | • Turbocharger<br>• Wire harness | 4-95 |
| Light | No light | P0048 | – | DC motor terminal short circuit, DC motor short circuit (Short to GND) (VNT actuator motor short to GND) | • Turbocharger<br>• Wire harness<br>• VNT controller | 4-100 |
| Light | No light | P006E | – | Power supply failure (Out of range low) (VNT actuator power supply too low) | • VNT controller<br>• Wire harness | 4-105 |
| Light | No light | P006F | – | Power supply failure (Out of range high) (VNT actuator power supply too high) | • VNT controller<br>• Wire harness | 4-109 |
| Light | No light | P007B | – | Intake air temperature sensor (intercooler outlet) - rationality | • Intake air temperature sensor (intercooler outlet)<br>• ECU (ECU connector) | 4-113 |
| Light | No light | P007C | – | Intake air temperature sensor (intercooler outlet) - out of range (Out of range low) | • Intake air temperature sensor (intercooler outlet)<br>• ECU (ECU connector)<br>• Wire harness | 4-126 |

| DIAGNOSTIC TROUBLE CODE (DTC) TABLE | | | | | | |
|---|---|---|---|---|---|---|
| **MIL** | **SVS LIGHT** | **DTC NO.** | **2 DIGIT DIAGNOSIS CODE** | **DIAGNOSIS ITEM** | **INSPECTION ITEM** | **REFER PAGE** |
| Light | No light | P007D | – | Intake air temperature sensor (intercooler outlet) - out of range (Out of range high) | • Intake air temperature sensor (intercooler outlet)<br>• ECU (ECU connector)<br>• Wire harness | 4-126 |
| No light | No light | P0088 | – | Excessive common-rail pressure | • SCV<br>• Supply pump<br>• Pressure limiter<br>• Fuel filter | 4-134 |
| Light | No light | P0096 | – | Intake air temperature sensor (intake manifold) - rationality | • Intake air temperature sensor (intercooler outlet)<br>• ECU (ECU connector) | 4-143 |
| Light | No light | P0097 | – | Intake air temperature sensor (intake manifold) - out of range (Out of range low) | • Intake air temperature sensor (intercooler outlet)<br>• ECU (ECU connector)<br>• Wire harness | 4-154 |
| Light | No light | P0098 | – | Intake air temperature sensor (intake manifold) - out of range (Out of range high) | • Intake air temperature sensor (intercooler outlet)<br>• ECU (ECU connector)<br>• Wire harness | 4-154 |
| Light | No light | P00AF | – | Controller error (VNT actuator CPU malfunction) | • VNT controller | 4-162 |
| Light | No light | P0101 | – | Air flow sensor - rationality | • Air flow sensor<br>• ECU (ECU connector) | 4-166 |
| Light | No light | P0104 | – | Air flow sensor - out of range | • Air flow sensor<br>• ECU (ECU connector) | 4-173 |
| Light | No light | P0106 | – | Boost pressure sensor - rationality | • Boost pressure sensor<br>• ECU (ECU connector) | 4-179 |
| Light | No light | P0107 | – | Boost pressure sensor - out of range (Out of range low) | • Boost pressure sensor<br>• ECU (ECU connector)<br>• Wire harness | 4-185 |
| Light | No light | P0108 | – | Boost pressure sensor - out of range (Out of range high) | • Boost pressure sensor<br>• ECU (ECU connector)<br>• Wire harness | 4-192 |
| Light | No light | P0111 | – | Intake air temperature sensor (air flow sensor built-in) - rationality | • Intake air temperature sensor (air flow sensor built-in)<br>• ECU (ECU connector) | 4-198 |
| Light | No light | P0112 | – | Intake air temperature sensor (air flow sensor built-in) - out of range (Out of range low) | • Intake air temperature sensor (air flow sensor built-in)<br>• ECU (ECU connector) | 4-204 |

| DIAGNOSTIC TROUBLE CODE (DTC) TABLE | | | | | | |
|---|---|---|---|---|---|---|
| **MIL** | **SVS LIGHT** | **DTC NO.** | **2 DIGIT DIAGNOSIS CODE** | **DIAGNOSIS ITEM** | **INSPECTION ITEM** | **REFER PAGE** |
| Light | No light | P0113 | – | Intake air temperature sensor (air flow sensor built-in) - out of range (Out of range high) | • Intake air temperature sensor (air flow sensor built-in)<br>• ECU (ECU connector) | 4-204 |
| Light | No light | P0115 | – | Malfunction of coolant temperature sensor and intake air temperature sensor | • Engine coolant temperature sensor<br>• Intake air temperature sensor | 4-210 |
| Light | No light | P0117 | – | Engine coolant temperature sensor 1 - out of range (Out of range low) | • Engine coolant temperature sensor<br>• ECU (ECU connector)<br>• Wire harness | 4-218 |
| Light | No light | P0118 | – | Engine coolant temperature sensor 1 - out of range (Out of range high) | • Engine coolant temperature sensor<br>• ECU (ECU connector)<br>• Wire harness | 4-218 |
| Light | No light | P011A | – | Engine coolant temperature sensor - rationality | • Engine coolant temperature sensor<br>• ECU (ECU connector)<br>• Wire harness | 4-226 |
| Light | No light | P0122 | – | Intake throttle valve position sensor 1 - out of range (Out of range low) | • Intake throttle valve opening sensor 1<br>• ECU (ECU connector)<br>• Wire harness | 4-234 |
| Light | No light | P0123 | – | Intake throttle valve position sensor 1 - out of range (Out of range high) | • Intake throttle valve opening sensor 1<br>• ECU (ECU connector)<br>• Wire harness | 4-234 |
| Light | Light | P0126 | – | Thermostat abnormality - Stuck in the open position after warmed-up | • Thermostat<br>• Engine coolant temperature | 4-244 |
| Light | No light | P0128 | – | Thermostat - The coolant temperature does not reach a warmed-up temperature | • Thermostat<br>• Engine coolant temperature | 4-248 |
| Light | No light | P0148 | – | Abnormality in post injection | • Fuel line<br>• Fuel filter<br>• Injector<br>• Engine speed main sensor (Crankshaft position sensor) | 4-253 |
| Light | No light | P016E | – | Fuel system pressure control - high | • Fuel filter<br>• Common rail pressure sensor<br>• Supply pump<br>• Common rail pressure limiter valve<br>• Wire harness | 4-264 |

| DIAGNOSTIC TROUBLE CODE (DTC) TABLE | | | | | | |
|---|---|---|---|---|---|---|
| **MIL** | **SVS LIGHT** | **DTC NO.** | **2 DIGIT DIAGNOSIS CODE** | **DIAGNOSIS ITEM** | **INSPECTION ITEM** | **REFER PAGE** |
| Light | No light | P016F | – | Fuel system pressure control - low | • Fuel filter<br>• Common rail pressure sensor<br>• Supply pump<br>• Common rail pressure limiter valve<br>• Wire harness | 4-264 |
| No light | Light | P0182 | – | Fuel temperature sensor Low | • Fuel temperature sensor<br>• ECU (ECU connector)<br>• Wire harness | 4-274 |
| No light | Light | P0183 | – | Fuel temperature sensor High | • Fuel temperature sensor<br>• ECU (ECU connector)<br>• Wire harness | 4-274 |
| Light | No light | P0191 | – | Common rail pressure sensor (main and sub) - out of range | • Fuel filter<br>• Common rail pressure sensor<br>• Supply pump<br>• Common rail pressure limiter valve<br>• Wire harness | 4-281 |
| Light | No light | P0192 | – | Common rail pressure sensor (main) - out of range (Out of range low) | • Common rail pressure sensor<br>• ECU (ECU connector)<br>• Wire harness | 4-286 |
| Light | No light | P0193 | – | Common rail pressure sensor (main) - out of range (Out of range high) | • Common rail pressure sensor<br>• ECU (ECU connector)<br>• Wire harness | 4-286 |
| Light | No light | P01A5 | – | Common rail pressure sensor (sub) - out of range (Out of range low) | • Common rail pressure sensor<br>• ECU (ECU connector)<br>• Wire harness | 4-295 |
| Light | No light | P01A6 | – | Common rail pressure sensor (sub) - out of range (Out of range high) | • Common rail pressure sensor<br>• ECU (ECU connector)<br>• Wire harness | 4-302 |
| Light | No light | P0200 | – | Fuel injector driver charge circuit (circuit high) | • ECU (ECU connector) | 4-309 |
| Light | No light | P0201 | – | Fuel injector - disconnection (#1cyl) | • ECU (ECU connector)<br>• Wire harness<br>• Injector | 4-311 |
| Light | No light | P0202 | – | Fuel injector - disconnection (#2cyl) | • ECU (ECU connector)<br>• Wire harness<br>• Injector | 4-311 |
| Light | No light | P0203 | – | Fuel injector - disconnection (#3cyl) | • ECU (ECU connector)<br>• Wire harness<br>• Injector | 4-311 |

| DIAGNOSTIC TROUBLE CODE (DTC) TABLE | | | | | | |
|---|---|---|---|---|---|---|
| **MIL** | **SVS LIGHT** | **DTC NO.** | **2 DIGIT DIAGNOSIS CODE** | **DIAGNOSIS ITEM** | **INSPECTION ITEM** | **REFER PAGE** |
| Light | No light | P0204 | – | Fuel injector - disconnection (#4cyl) | • ECU (ECU connector)<br>• Wire harness<br>• Injector | 4-311 |
| Light | No light | P0205 | – | Fuel injector - disconnection (#5cyl) | • ECU (ECU connector)<br>• Wire harness<br>• Injector | 4-311 |
| Light | No light | P0206 | – | Fuel injector - disconnection (#6cyl) | • ECU (ECU connector)<br>• Wire harness<br>• Injector | 4-311 |
| No light | Light | P0217 | – | Engine coolant over temperature condition | • ECU (ECU connector)<br>• Engine coolant temperature sensor<br>• Engine cooling system | 4-316 |
| No light | No light | P0219 | – | Engine overspeed condition | • Engine oil level<br>• Engine speed main sensor<br>• Wire harness<br>• ECU (ECU connector) | 4-321 |
| Light | No light | P0222 | – | Intake throttle valve position sensor 2 - out of range (Out of range low) | • Intake throttle valve-opening sensor 2<br>• ECU (ECU connector)<br>• Wire harness | 4-327 |
| Light | No light | P0223 | – | Intake throttle valve position sensor 2 - out of range (Out of range high) | • Intake throttle valve-opening sensor 2<br>• ECU (ECU connector)<br>• Wire harness | 4-327 |
| Light | No light | P0234 | – | Overboost | • Turbocharger<br>• VNT controller<br>• Exhaust system parts<br>• Boost pressure sensor<br>• EGR valve | 4-337 |
| Light | No light | P0263 | – | #1 Injection quantity and timing | • Injector<br>• Fuel filter<br>• Injection pipe<br>• ECU (ECU connector) | 4-343 |
| Light | No light | P0266 | – | #2 Injection quantity and timing | • Injector<br>• Fuel filter<br>• Injection pipe<br>• ECU (ECU connector) | 4-343 |
| Light | No light | P0269 | – | #3 Injection quantity and timing | • Injector<br>• Fuel filter<br>• Injection pipe<br>• ECU (ECU connector) | 4-343 |

| DIAGNOSTIC TROUBLE CODE (DTC) TABLE | | | | | | |
|---|---|---|---|---|---|---|
| **MIL** | **SVS LIGHT** | **DTC NO.** | **2 DIGIT DIAGNO-SIS CODE** | **DIAGNOSIS ITEM** | **INSPECTION ITEM** | **REFER PAGE** |
| Light | No light | P026C | – | All injector (#1 - #6) Injection quantity and timing | • Fuel filter<br>• Injection pipe<br>• Injector<br>• Crankshaft position sensor | 4-354 |
| Light | No light | P026D | – | All injector (#1 - #6) Injection quantity and timing | • Fuel filter<br>• Injection pipe<br>• Injector<br>• Crankshaft position sensor | 4-354 |
| Light | No light | P0272 | – | #4 Injection quantity and timing | • Injector<br>• Fuel filter<br>• Injection pipe<br>• ECU (ECU connector) | 4-343 |
| Light | No light | P0275 | – | #5 Injection quantity and timing | • Injector<br>• Fuel filter<br>• Injection pipe<br>• ECU (ECU connector) | 4-343 |
| Light | No light | P0278 | – | #6 Injection quantity and timing | • Injector<br>• Fuel filter<br>• Injection pipe<br>• ECU (ECU connector) | 4-343 |
| Light | No light | P0299 | – | Underboost | • VNT controller<br>• Turbocharger | 4-367 |
| Light | No light | P0300 | – | All injector (#1 - #6) Misfire | • Injection pipe<br>• Cylinder<br>• Injector | 4-372 |
| Light | No light | P0301 | – | #1 Misfire | • Injection pipe<br>• Cylinder<br>• Injector | 4-389 |
| Light | No light | P0302 | – | #2 Misfire | • Injection pipe<br>• Cylinder<br>• Injector | 4-389 |
| Light | No light | P0303 | – | #3 Misfire | • Injection pipe<br>• Cylinder<br>• Injector | 4-389 |
| Light | No light | P0304 | – | #4 Misfire | • Injection pipe<br>• Cylinder<br>• Injector | 4-389 |
| Light | No light | P0305 | – | #5 Misfire | • Injection pipe<br>• Cylinder<br>• Injector | 4-389 |

| DIAGNOSTIC TROUBLE CODE (DTC) TABLE | | | | | | |
|---|---|---|---|---|---|---|
| **MIL** | **SVS LIGHT** | **DTC NO.** | **2 DIGIT DIAGNOSIS CODE** | **DIAGNOSIS ITEM** | **INSPECTION ITEM** | **REFER PAGE** |
| Light | No light | P0306 | – | #6 Misfire | • Injection pipe<br>• Cylinder<br>• Injector | 4-389 |
| Light | No light | P0335 | – | Crankshaft position sensor - disconnection | • Wire harness<br>• ECU (ECU connector)<br>• Engine speed main sensor | 4-397 |
| Light | No light | P0336 | – | Crankshaft position sensor - rationality | • Wire harness<br>• ECU (ECU connector)<br>• Engine speed main sensor | 4-402 |
| Light | No light | P0340 | – | Camshaft position sensor - disconnection | • Wire harness<br>• ECU (ECU connector)<br>• Engine speed sub sensor | 4-408 |
| Light | No light | P0341 | – | Camshaft position sensor - rationality | • Wire harness<br>• ECU (ECU connector)<br>• Engine speed sub sensor | 4-413 |
| Light | No light | P0381 | – | Glow lamp (wait-to-start lamp) - circuit | • Glow light<br>• ECU (ECU connector)<br>• Wire harness | 4-420 |
| Light | No light | P0401 | – | EGR low flow | • EGR valve<br>• Wire harness | 4-425 |
| Light | No light | P0402 | – | EGR high flow | • EGR valve<br>• Wire harness<br>• ECU (ECU connector) | 4-439 |
| Light | No light | P0404 | – | Valve position control failure - DC motor out of range, functional (EGR valve stick failure) | • EGR valve<br>• Foreign substances<br>• ECU (ECU connector) | 4-449 |
| Light | No light | P0405 | – | EGR valve controller position sensor signal too low (EGR actuator position sensor signal too low) | • EGR valve<br>• Wire harness | 4-454 |
| Light | No light | P0406 | – | Valve position sensor magnet lost (EGR actuator position sensor signal too high) | • EGR valve<br>• Wire harness | 4-454 |
| Light | No light | P041B | – | EGR gas temperature sensor - rationality | • EGR gas temperature sensor<br>• ECU (ECU connector) | 4-460 |
| Light | No light | P041C | – | EGR gas temperature sensor - out of range (Out of range low) | • EGR gas temperature sensor<br>• ECU (ECU connector)<br>• Wire harness | 4-468 |
| Light | No light | P041D | – | EGR gas temperature sensor - out of range (Out of range high) | • EGR gas temperature sensor<br>• ECU (ECU connector)<br>• Wire harness | 4-468 |

| DIAGNOSTIC TROUBLE CODE (DTC) TABLE | | | | | | |
|---|---|---|---|---|---|---|
| **MIL** | **SVS LIGHT** | **DTC NO.** | **2 DIGIT DIAGNOSIS CODE** | **DIAGNOSIS ITEM** | **INSPECTION ITEM** | **REFER PAGE** |
| No light | No light | P0420 | – | Tentative determination of ATC deterioration | – | 4-476 |
| Light | No light | P0421 | – | Determination of ATC deterioration | • Fuel<br>• Exhaust gas temperature sensor 4 (DPR inlet) | 4-478 |
| Light | No light | P0422 | – | DOC deterioration | • Fuel<br>• Exhaust gas temperature sensor 4 (DPR inlet) | 4-490 |
| Light | No light | P0489 | – | EGR valve controller motor (open circuit) (EGR actuator motor open circuit) | • EGR valve<br>• Wire harness | 4-493 |
| Light | No light | P0490 | – | EGR valve controller motor (short circuit) (EGR actuator motor short circuit) | • EGR valve<br>• Wire harness | 4-493 |
| Light | No light | P049D | – | Position failure (EGR actuator wiping fault) | • EGR valve (link, seat)<br>• Wire harness | 4-499 |
| Light | No light | P04D5 | – | Exhaust brake MV output open load/short to GND | • Exhaust brake magnetic valve<br>• Wire harness<br>• Engine ECU | 4-504 |
| Light | No light | P04D6 | – | Exhaust brake MV output short to BATT | • Exhaust brake magnetic valve<br>• Wire harness<br>• Engine ECU | 4-504 |
| Light | No light | P04DA | – | EGR system feedback control | • EGR valve<br>• Intake air temperature sensor (intake manifold)<br>• VNT controller | 4-512 |
| Light | No light | P04DB | – | Crankcase ventilation system - disconnection between the CV valve and the intake manifold | • Breather hose<br>• Air flow sensor | 4-522 |
| Light | No light | P0500 | – | Vehicle speed sensor - low | • Vehicle speed sensor<br>• Pulse converter<br>• ECU (ECU connector)<br>• Wire harness | 4-530 |
| Light | No light | P0501 | – | Vehicle speed sensor - high | • Vehicle speed sensor<br>• Pulse converter<br>• ECU (ECU connector)<br>• Wire harness | 4-530 |
| No light | No light | P0504 | – | Brake Switch Correlation | • Brake switch<br>• Stop light switch<br>• ECU (ECU connector)<br>• Wire harness | 4-536 |

| DIAGNOSTIC TROUBLE CODE (DTC) TABLE | | | | | | |
|---|---|---|---|---|---|---|
| **MIL** | **SVS LIGHT** | **DTC NO.** | **2 DIGIT DIAGNOSIS CODE** | **DIAGNOSIS ITEM** | **INSPECTION ITEM** | **REFER PAGE** |
| Light | No light | P0506 | – | Idle speed control system (Low) | • Injector injection quantity abnormal<br>• Dragging/interference with transmission | 4-542 |
| Light | No light | P0507 | – | Idle speed control system (High) | • Injector injection quantity abnormal<br>• Dragging/interference with transmission | 4-542 |
| No light | Light | P0524 | – | Engine oil pressure Too Low | • Engine oil<br>• Wire harness<br>• Engine oil pressure switch<br>• ECU (ECU connector) | 4-545 |
| Light | No light | P0545 | – | Exhaust gas temperature sensor 1 (ATC upstream) - out of range (Out of range low) | • Exhaust gas temperature sensor 1 (ATC upstream)<br>• Wire harness<br>• ECU (ECU connector) | 4-550 |
| Light | No light | P0546 | – | Exhaust gas temperature sensor 1 (ATC upstream) - out of range (Out of range high) | • Exhaust gas temperature sensor 1 (ATC upstream)<br>• Wire harness<br>• ECU (ECU connector) | 4-550 |
| Light | No light | P054E | – | Idle fuel control system (low) | • Injector injection quantity abnormal<br>• Dragging/interference with transmission | 4-559 |
| Light | No light | P054F | – | Idle fuel control system (high) | • Injector injection quantity abnormal<br>• Dragging/interference with transmission | 4-559 |
| No light | Light | P0562 | – | Battery voltage - out of range (Out of range low) | • Alternator<br>• ECU (ECU connector) | 4-562 |
| No light | Light | P0563 | – | Battery voltage - out of range (Out of range high) | • Battery<br>• ECU (ECU connector) | 4-562 |
| Light | No light | P0603 | – | Engine ECU EEPROM fault | • Engine ECU | 4-568 |
| Light | No light | P0605 | – | Flash ROM error | • Engine ECU | 4-572 |
| No light | Light | P0606 | – | Control module processor | • Engine ECU | 4-574 |
| No light | Light | P0607 | – | Control module performance | • Engine ECU | 4-576 |
| No light | Light | P0610 | – | VIN data error | • Vehicle control ECU<br>• Engine ECU<br>• Wire harness | 4-578 |

| DIAGNOSTIC TROUBLE CODE (DTC) TABLE | | | | | | |
|---|---|---|---|---|---|---|
| **MIL** | **SVS LIGHT** | **DTC NO.** | **2 DIGIT DIAGNOSIS CODE** | **DIAGNOSIS ITEM** | **INSPECTION ITEM** | **REFER PAGE** |
| Light | No light | P0611 | – | Fuel injector driver charge circuit - circuit (circuit low) | • Engine ECU | 4-581 |
| Light | No light | P0617 | – | Starter switch - rationality | • Wire harness<br>• ECU (ECU connector) | 4-583 |
| Light | No light | P0628 | – | Suction control valve for fuel supply pump - circuit (Circuit low) | • Supply pump<br>• Wire harness<br>• ECU (ECU connector) | 4-587 |
| Light | No light | P0629 | – | Suction control valve for fuel supply pump - circuit (Circuit high) | • Supply pump<br>• Wire harness<br>• ECU (ECU connector) | 4-587 |
| Light | No light | P062F | – | Controller store data error (VNT actuator EEPROM error) | • VNT controller | 4-594 |
| No light | Light | P0630 | – | VIN Not Programmed or Mismatch | • Vehicle control ECU<br>• Engine ECU<br>• Wire harness | 4-598 |
| No light | No light | P0642 | – | ECU sensor power supply 1 failure (Out of range low) | • Wire harness<br>• ECU (ECU connector) | 4-601 |
| No light | No light | P0643 | – | ECU sensor power supply 1 failure (Out of range high) | • Wire harness<br>• ECU (ECU connector) | 4-605 |
| Light | No light | P064C | – | Glow controller - Battery for glow plug open, GND short Glow controller - Over temperature | • Wire harness<br>• GCU | 4-610 |
| No light | No light | P0652 | – | ECU sensor power supply 2 failure (Out of range low) | • Wire harness<br>• ECU (ECU connector) | 4-615 |
| No light | No light | P0653 | – | ECU sensor power supply 2 failure (Out of range high) | • Wire harness<br>• ECU (ECU connector) | 4-620 |
| Light | No light | P0671 | – | Glow plug (Circuit low) (#1cyl), Glow plug (Circuit high) (#1cyl) | • Glow plug | 4-625 |
| Light | No light | P0672 | – | Glow plug (Circuit low) (#2cyl), Glow plug (Circuit high) (#2cyl) | • Glow plug | 4-625 |
| Light | No light | P0675 | – | Glow plug (Circuit low) (#5cyl), Glow plug (Circuit high) (#5cyl) | • Glow plug | 4-625 |
| Light | No light | P0676 | – | Glow plug (Circuit low) (#6cyl), Glow plug (Circuit high) (#6cyl) | • Glow plug | 4-625 |
| Light | No light | P0683 | – | Glow controller - Battery for glow controller open, GND short Glow controller - Glow control signal Glow controller - Diagnosis signal | • Wire harness<br>• ECU (ECU connector) | 4-635 |

| DIAGNOSTIC TROUBLE CODE (DTC) TABLE | | | | | | |
|---|---|---|---|---|---|---|
| **MIL** | **SVS LIGHT** | **DTC NO.** | **2 DIGIT DIAGNOSIS CODE** | **DIAGNOSIS ITEM** | **INSPECTION ITEM** | **REFER PAGE** |
| No light | Light | P0686 | – | ECM/PCM Power Relay Control Circuit high | • Main relay<br>• Wire harness<br>• ECU (ECU connector) | 4-640 |
| No light | No light | P0698 | – | ECU sensor power supply 3 failure (Low) | • Engine ECU | 4-644 |
| No light | No light | P0699 | – | ECU sensor power supply 3 failure (High) | • Boost pressure sensor<br>• Engine ECU | 4-646 |
| No light | No light | P06A4 | – | ECU sensor power supply 4 failure (Low) | • Engine ECU | 4-648 |
| No light | No light | P06A5 | – | ECU sensor power supply 4 failure (High) | • Diesel throttle (intake throttle valve) position sensor 1<br>• Engine ECU | 4-650 |
| No light | No light | P06D3 | – | Air flow sensor power supply failure Short to GND | • Air flow sensor<br>• ECU (ECU connector)<br>• Wire harness | 4-652 |
| No light | No light | P06D4 | – | Air flow sensor power supply failure (High) | • Battery<br>• ECU (ECU connector)<br>• Alternator | 4-652 |
| No light | No light | P0704 | – | Clutch Switch Input Circuit | • Wire harness<br>• ECU (ECU connector)<br>• Clutch switch | 4-659 |
| Light | No light | P073D | – | Transmission information (automatic transmission) - rationality | • Neural switch circuit<br>• CAN circuit<br>• Transmission ECU | 4-663 |
| No light | No light | P081A | – | Starter Disable Circuit Low | • Starter cut relay<br>• Wire harness<br>• ECU (ECU connector) | 4-669 |
| No light | No light | P081B | – | Starter Disable Circuit High | • Starter cut relay<br>• Wire harness<br>• ECU (ECU connector) | 4-673 |
| Light | No light | P0850 | – | Neutral switch - rationality | • Wire harness<br>• ECU (ECU connector)<br>• Neutral switch | 4-677 |
| No light | No light | P1133 | – | PTO accelerator sensor (Hi) | • PTO accelerator sensor<br>• ECU (ECU connector)<br>• Wire harness | 4-682 |
| Light | No light | P119F | – | Common rail pressure sensor - rationality | • Common rail pressure sensor<br>• ECU (ECU connector) | 4-688 |

| DIAGNOSTIC TROUBLE CODE (DTC) TABLE | | | | | | |
|---|---|---|---|---|---|---|
| **MIL** | **SVS LIGHT** | **DTC NO.** | **2 DIGIT DIAGNOSIS CODE** | **DIAGNOSIS ITEM** | **INSPECTION ITEM** | **REFER PAGE** |
| Light | No light | P1426 | – | Differential pressure sensor - rationality | • Differential pressure sensor<br>• Differential pressure line<br>• ECU (ECU connector)<br>• Wire harness | 4-693 |
| Light | No light | P1427 | – | Differential pressure sensor - out of range (Out of range low) | • Differential pressure sensor<br>• ECU (ECU connector)<br>• Wire harness | 4-699 |
| Light | No light | P1428 | – | Differential pressure sensor - out of range (Out of range high) | • Differential pressure sensor<br>• ECU (ECU connector)<br>• Wire harness | 4-705 |
| No light | No light | P1458 | – | Controller high temperature (EGR actuator over temp warning level) | • EGR valve<br>• Wire harness | 4-711 |
| Light | No light | P1459 | – | Controller high temperature (EGR actuator over temp severe level) | • EGR valve<br>• Wire harness | 4-716 |
| Light | No light | P14B0 | – | Controller store data error (EGR actuator abnormal information reading) | • EGR valve<br>• Wire harness | 4-721 |
| Light | No light | P14B2 | – | EGR controller power supply open circuit (EGR actuator power supply open circuit) | • EGR valve<br>• Wire harness | 4-725 |
| Light | No light | P14B3 | – | Battery voltage (high) (EGR actuator power supply too high) | • EGR valve<br>• Wire harness<br>• Battery | 4-729 |
| Light | No light | P14B4 | – | Battery voltage (low) (EGR actuator power supply too low) | • EGR valve<br>• Wire harness<br>• Battery | 4-729 |
| Light | No light | P14B7 | – | EGR valve controller temperature sensor 1 (Signal too low) (EGR actuator temp. sensor 1 signal too low) | • EGR valve<br>• Wire harness | 4-735 |
| Light | No light | P14B8 | – | EGR valve controller temperature sensor 1 (Signal too high) (EGR actuator temp. sensor 1 signal too high) | • EGR valve<br>• Wire harness | 4-735 |
| Light | No light | P14BC | – | EGR valve controller temperature sensor 2 (Signal too low) (EGR actuator temp. sensor 2 signal too low) | • EGR valve<br>• Wire harness | 4-741 |
| Light | No light | P14BD | – | EGR valve controller temperature sensor 2 (Signal too high) (EGR actuator temp. sensor 2 signal too high) | • EGR valve<br>• Wire harness | 4-741 |

| DIAGNOSTIC TROUBLE CODE (DTC) TABLE | | | | | | |
|---|---|---|---|---|---|---|
| **MIL** | **SVS LIGHT** | **DTC NO.** | **2 DIGIT DIAGNOSIS CODE** | **DIAGNOSIS ITEM** | **INSPECTION ITEM** | **REFER PAGE** |
| Light | No light | P14BF | – | EGR valve controller temperature sensor 1, 2 - rationality (EGR actuator temp. sensor 1 performance invalid) | • EGR valve<br>• Wire harness | 4-747 |
| Light | No light | P1515 | – | Charge air undercooling | • Intercooler | 4-752 |
| No light | No light | P1530 | – | Engine stop switch malfunction | • Engine stop switch<br>• ECU (ECU connector)<br>• Wire harness | 4-757 |
| Light | No light | P2002 | – | Filtering performance (Missing substrate) | • Boost pressure sensor<br>• Coolant temperature sensor<br>• Intake air temperature sensor<br>• Exhaust gas temperature sensor (SCR inlet)<br>• Injector | 4-761 |
| Light | No light | P200C | – | DPF over temperature | • Engine<br>• Wire harness<br>• Temperature sensor | 4-781 |
| Light | No light | P2032 | – | Exhaust gas temperature sensor 2 (ATC downstream)-out of range (out of range low) | • Exhaust gas temperature sensor 2 (ATC downstream)<br>• Wire harness<br>• ECU (ECU connector) | 4-787 |
| Light | No light | P2033 | – | Exhaust gas temperature sensor 2 (ATC downstream)-out of range (out of range high) | • Exhaust gas temperature sensor 2 (ATC downstream)<br>• Wire harness<br>• ECU (ECU connector) | 4-787 |
| No light | Light | P203F | – | Empty reductant tank | • DEF tank level sensor | 4-795 |
| Light | No light | P204F | – | Reductant System Performance | — | 4-799 |
| Light | No light | P206B | – | DEF quality sensor - rationality | • NOx sensor 1 (SCR upstream)<br>• NOx sensor 2 (SCR downstream)<br>• DEF quality sensor<br>• Exhaust gas temperature sensor (SCR inlet)<br>• DEF injector 1, 2<br>• Air flow sensor<br>• Wire harness<br>• SCR catalyst<br>• Engine ECU | 4-801 |
| Light | Light | P207F | – | Improper reductant | • DEF | 4-824 |

| DIAGNOSTIC TROUBLE CODE (DTC) TABLE | | | | | | |
|---|---|---|---|---|---|---|
| **MIL** | **SVS LIGHT** | **DTC NO.** | **2 DIGIT DIAGNOSIS CODE** | **DIAGNOSIS ITEM** | **INSPECTION ITEM** | **REFER PAGE** |
| Light | No light | P2080 | – | Exhaust gas temperature sensor 1 (ATC upstream) - rationality | • Exhaust gas temperature sensor 1 (ATC upstream)<br>• Exhaust gas temperature sensor 2 (ATC downstream)<br>• Wire harness<br>• ECU (ECU connector) | 4-847 |
| Light | No light | P2084 | – | Exhaust gas temperature sensor 2 (ATC downstream)-rationality | • Exhaust gas temperature sensor 2 (ATC downstream)<br>• Wire harness<br>• ECU (ECU connector) | 4-856 |
| Light | No light | P20CD | – | Malfunction of fuel dosing valve (Low) | • Fuel dosing valve<br>• Wire harness<br>• ECU (ECU connector) | 4-864 |
| Light | No light | P20CE | – | Malfunction of fuel dosing valve (High) | • Fuel dosing valve | 4-868 |
| No light | Light | P20CF | – | Characteristic abnormality of fuel dosing valve | — | 4-872 |
| Light | No light | P20D8 | – | Exhaust Fuel Doser open/close stuck | • Fuel pipe (for aftertreatment)<br>• Fuel dosing valve | 4-877 |
| Light | No light | P20DE | – | Aftertreatment Fuel Injection Line Pressure Sensor Performance Invalid | • Aftertreatment fuel injection line pressure sensor<br>• Fuel pipe (for aftertreatment) | 4-882 |
| Light | No light | P20DF | – | Aftertreatment Fuel Injection Line Pressure Sensor Signal Too Low | • Aftertreatment fuel injection line pressure sensor<br>• Wire harness<br>• ECU (ECU connector) | 4-886 |
| Light | No light | P20E0 | – | Aftertreatment Fuel Injection Line Pressure Sensor Signal Too High | • Aftertreatment fuel injection line pressure sensor<br>• Wire harness<br>• ECU (ECU connector) | 4-892 |
| Light | No light | P20EE | – | NOx converting catalyst conversion efficiency | • NOx sensor<br>• DEF<br>• Catalyst | 4-898 |
| Light | No light | P2100 | – | DC motor for intake throttle valve - circuit (Open circuit (circuit low)) | • Intake throttle<br>• Wire harness<br>• ECU (ECU connector) | 4-923 |
| Light | No light | P2101 | – | Intake throttle valve - functional | • Intake throttle<br>• Wire harness<br>• ECU (ECU connector) | 4-929 |
| Light | No light | P2103 | – | DC motor for intake throttle valve - circuit (Short circuit (circuit high)) | • Intake throttle<br>• Wire harness<br>• ECU (ECU connector) | 4-935 |

| DIAGNOSTIC TROUBLE CODE (DTC) TABLE | | | | | | |
|---|---|---|---|---|---|---|
| **MIL** | **SVS LIGHT** | **DTC NO.** | **2 DIGIT DIAGNOSIS CODE** | **DIAGNOSIS ITEM** | **INSPECTION ITEM** | **REFER PAGE** |
| Light | No light | P2120 | – | Throttle/Pedal Position Sensor/ Switch "D" Circuit | • Wire harness<br>• ECU (ECU connector)<br>• Accelerator sensor | 4-941 |
| Light | No light | P2122 | – | Accelerator pedal position sensor 1 - out of range (Out of range low) | • Accelerator sensor 1<br>• ECU (ECU connector)<br>• Wire harness | 4-945 |
| Light | No light | P2123 | – | Accelerator pedal position sensor 1 - out of range (Out of range high) | • Accelerator sensor 1<br>• ECU (ECU connector)<br>• Wire harness | 4-945 |
| Light | No light | P2127 | – | Accelerator pedal position sensor 2 - out of range (Out of range low) | • Accelerator sensor 2<br>• ECU (ECU connector)<br>• Wire harness | 4-953 |
| Light | No light | P2128 | – | Accelerator pedal position sensor 2 - out of range (Out of range high) | • Accelerator sensor 2<br>• ECU (ECU connector)<br>• Wire harness | 4-953 |
| Light | No light | P2135 | – | Intake throttle valve position sensor - rationality | • Intake throttle valve opening sensor<br>• ECU (ECU connector) | 4-962 |
| Light | No light | P2138 | – | Accelerator pedal position sensor - rationality | • Accelerator sensor<br>• ECU (ECU connector)<br>• Wire harness | 4-967 |
| Light | No light | P2146 | – | Fuel injector driver circuit 1 - circuit (circuit open) | • Injector<br>• Engine ECU<br>• Wire harness | 4-972 |
| Light | No light | P2147 | – | Fuel injector driver circuit 1 - circuit (circuit low) | • Injector<br>• Engine ECU<br>• Wire harness | 4-979 |
| Light | No light | P2148 | – | Fuel injector driver circuit 1 - circuit (circuit high) | • Injector<br>• Engine ECU<br>• Wire harness | 4-979 |
| Light | No light | P2149 | – | Fuel injector driver circuit 2 - circuit (circuit open) | • Injector<br>• Engine ECU<br>• Wire harness | 4-987 |
| Light | No light | P2150 | – | Fuel injector driver circuit 2 - circuit (circuit low) | • Injector<br>• Engine ECU<br>• Wire harness | 4-993 |
| Light | No light | P2151 | – | Fuel injector driver circuit 2 - circuit (circuit high) | • Injector<br>• Engine ECU<br>• Wire harness | 4-993 |

| DIAGNOSTIC TROUBLE CODE (DTC) TABLE | | | | | | |
|---|---|---|---|---|---|---|
| **MIL** | **SVS LIGHT** | **DTC NO.** | **2 DIGIT DIAGNO-SIS CODE** | **DIAGNOSIS ITEM** | **INSPECTION ITEM** | **REFER PAGE** |
| Light | No light | P2184 | – | Engine coolant temperature sensor 2 - out of range (Out of range low) | • Engine coolant temperature sensor 2<br>• ECU (ECU connector)<br>• Wire harness | 4-1001 |
| Light | No light | P2185 | – | Engine coolant temperature sensor 2 - out of range (Out of range high) | • Engine coolant temperature sensor 2<br>• ECU (ECU connector)<br>• Wire harness | 4-1001 |
| Light | No light | P2201 | – | NOx sensor (SCR upstream) - Performance | • NOx sensor 1 (SCR upstream)<br>• NOx sensor 2 (SCR down-stream)<br>• Exhaust gas temperature sensor 4 (DPR inlet)<br>• Exhaust gas temperature sensor (SCR inlet)<br>• EGR valve<br>• Air flow sensor<br>• Boost pressure sensor<br>• Intake air temperature sensor (intake manifold)<br>• Engine coolant temperature sensor 1<br>• Engine coolant temperature sensor 2<br>• Wire harness<br>• Engine ECU | 4-1009 |
| Light | No light | P2227 | – | Barometric pressure sensor - rationality | • Boost pressure sensor<br>• Engine ECU | 4-1048 |
| Light | No light | P2228 | – | Barometric pressure sensor - out of range (out of range low) | • Engine ECU | 4-1052 |
| Light | No light | P2229 | – | Barometric pressure sensor - out of range (out of range high) | • Engine ECU | 4-1052 |
| No light | No light | P2269 | – | Water in Fuel Condition | • Fuel filter water level sensor<br>• Wire harness<br>• ECU (ECU connector) | 4-1057 |
| Light | No light | P226C | – | Boost pressure slow response | • VNT controller<br>• Turbocharger | 4-1061 |

| DIAGNOSTIC TROUBLE CODE (DTC) TABLE | | | | | | |
|---|---|---|---|---|---|---|
| **MIL** | **SVS LIGHT** | **DTC NO.** | **2 DIGIT DIAGNOSIS CODE** | **DIAGNOSIS ITEM** | **INSPECTION ITEM** | **REFER PAGE** |
| Light | No light | P229F | – | NOx sensor (SCR downstream) - Performance and Monitoring capability | • NOx sensor 1 (SCR upstream)<br>• NOx sensor 2 (SCR downstream)<br>• Exhaust gas temperature sensor 4 (DPR inlet)<br>• Exhaust gas temperature sensor (SCR inlet)<br>• EGR valve<br>• Air flow sensor<br>• Boost pressure sensor<br>• Intake air temperature sensor (intake manifold)<br>• Engine coolant temperature sensor 1<br>• Engine coolant temperature sensor 2<br>• Wire harness<br>• Engine ECU | 4-1069 |
| Light | No light | P22D3 | – | Nozzle stuck (VNT stick failure) | • VNT controller<br>• Turbocharger | 4-1109 |
| Light | No light | P240F | – | EGR flow slow response | • EGR valve<br>• Battery | 4-1113 |
| No light | No light | P2428 | – | ATC over temperature | • Injector<br>• Pipe<br>• Hose<br>• ATC<br>• DPR | 4-1122 |
| Light | No light | P242B | – | Exhaust gas temperature sensor 3 (DOC inlet) - rationality | • Exhaust gas temperature sensor 3 (DOC inlet)<br>• Wire harness<br>• ECU (ECU connector) | 4-1126 |
| Light | No light | P242C | – | Exhaust gas temperature sensor 3 (DOC inlet) - out of range (Out of range low) | • Exhaust gas temperature sensor 3 (DOC inlet)<br>• Wire harness<br>• ECU (ECU connector) | 4-1134 |
| Light | No light | P242D | – | Exhaust gas temperature sensor 3 (DOC inlet) - out of range (Out of range high) | • Exhaust gas temperature sensor 3 (DOC inlet)<br>• Wire harness<br>• ECU (ECU connector) | 4-1134 |
| Light | No light | P244A | – | Filtering performance (missing substrate) | • Engine<br>• Temperature | 4-1142 |
| Light | No light | P244B | – | Incomplete regeneration | • Differential pressure sensor<br>• Meter | 4-1159 |

| DIAGNOSTIC TROUBLE CODE (DTC) TABLE | | | | | | |
|---|---|---|---|---|---|---|
| **MIL** | **SVS LIGHT** | **DTC NO.** | **2 DIGIT DIAGNOSIS CODE** | **DIAGNOSIS ITEM** | **INSPECTION ITEM** | **REFER PAGE** |
| Light | No light | P2457 | – | EGR cooler performance | • EGR cooler<br>• ECU (ECU connector) | 4-1179 |
| No light | Light | P2458 | – | Fault in manual regeneration | • Exhaust pipe<br>• Exhaust brake valve<br>• Exhaust gas temperature sensor (DPR inlet)<br>• Exhaust gas temperature sensor 1 (ATC upstream)<br>• Exhaust gas temperature sensor 2 (ATC downstream)<br>• DPR<br>• Coolant temperature sensor<br>• Engine | 4-1193 |
| Light | No light | P2459 | – | Frequent regeneration | • ECU (ECU connector) | 4-1202 |
| Light | No light | P2463 | – | DPF clogged | • Meter | 4-1204 |
| Light | No light | P246F | – | Exhaust gas temperature sensor 4 (DPR inlet) - rationality | • Exhaust gas temperature sensor 4 (DPR inlet)<br>• ECU (ECU connector) | 4-1209 |
| Light | No light | P2470 | – | Exhaust gas temperature sensor 4 (DPR inlet) - out of range (Out of range low) | • Exhaust gas temperature sensor 4 (DPR inlet)<br>• ECU (ECU connector)<br>• Wire harness | 4-1217 |
| Light | No light | P2471 | – | Exhaust gas temperature sensor 4 (DPR inlet) - out of range (Out of range high) | • Exhaust gas temperature sensor 4 (DPR inlet)<br>• ECU (ECU connector)<br>• Wire harness | 4-1217 |
| Light | No light | P2481 | – | Exhaust gas temperature sensor 5 (DPR outlet) - out of range (Out of range low) | • Exhaust gas temperature sensor 5 (DPR outlet)<br>• ECU (ECU connector)<br>• Wire harness | 4-1225 |
| Light | No light | P2482 | – | Exhaust gas temperature sensor 5 (DPR outlet) - out of range (Out of range high) | • Exhaust gas temperature sensor 5 (DPR outlet)<br>• ECU (ECU connector)<br>• Wire harness | 4-1225 |
| Light | No light | P2483 | – | Exhaust gas temperature sensor 5 (DPR outlet) - rationality | • Exhaust gas temperature sensor 5 (DPR outlet)<br>• ECU (ECU connector) | 4-1233 |
| Light | No light | P24A0 | – | Abnormality in regeneration FB (Low) | • Exhaust gas temperature sensor (DPR inlet) | 4-1241 |
| Light | No light | P24A1 | – | Abnormality in regeneration FB (High) | — | 4-1244 |

| DIAGNOSTIC TROUBLE CODE (DTC) TABLE | | | | | | |
|---|---|---|---|---|---|---|
| **MIL** | **SVS LIGHT** | **DTC NO.** | **2 DIGIT DIAGNOSIS CODE** | **DIAGNOSIS ITEM** | **INSPECTION ITEM** | **REFER PAGE** |
| Light | No light | P24A2 | – | Excessive fuel dosing quantity | • Engine oil<br>• Exhaust pipe<br>• Injector<br>• Exhaust brake valve<br>• EGR valve<br>• VNT controller<br>• Exhaust gas temperature sensor (DPR inlet)<br>• DPR | 4-1246 |
| Light | No light | P24A3 | 01 | Abnormal of power supply voltage for PM sensor (High) | • PM sensor<br>• Wire harness<br>• Battery | 4-1256 |
| Light | No light | P24AE | 04, 05, 06, 14, 25, 26, 27, 28 | Abnormal of PM sensor | • PM sensor | 4-1261 |
| Light | No light | P24AF | 23 | PM sensor circuit range/ performance | • PM sensor<br>• DPR filter | 4-1269 |
| Light | No light | P24B0 | 19, 20, 21 | Failure of PM sensor (short) | • PM sensor | 4-1274 |
| Light | No light | P24B1 | 18 | Failure of PM sensor (open) | • PM sensor | 4-1279 |
| Light | No light | P24B4 | 10, 11, 15, 17 | Abnormal of PM sensor heater | • PM sensor<br>• DPR filter | 4-1282 |
| Light | No light | P24B6 | 02 | Abnormal of power supply voltage for PM sensor (Low) | • PM sensor<br>• Wire harness<br>• Battery | 4-1292 |
| Light | No light | P24B7 | 08 | Performance - PM sensor heater resistance | • PM sensor<br>• Battery | 4-1297 |
| Light | No light | P24C7 | 09 | PM sensor temperature circuit range/ performance | • PM sensor | 4-1300 |
| Light | No light | P24D1 | 12 | PM sensor regeneration incomplete | • PM sensor<br>• DPR filter | 4-1304 |
| Light | No light | P24DA | 07 | PM sensor exhaust sample error | • PM sensor<br>• DPR filter | 4-1309 |
| Light | No light | P2563 | – | Nozzle position sensor failure range (High level) (VNT actuator position sensor performance invalid) | • VNT controller<br>• Wire harness<br>• Turbocharger | 4-1314 |
| Light | No light | P2564 | – | Nozzle position sensor failure range (Low level) (VNT actuator position sensor signal too low) | • VNT controller<br>• Wire harness<br>• Turbocharger | 4-1319 |

| DIAGNOSTIC TROUBLE CODE (DTC) TABLE | | | | | | |
|---|---|---|---|---|---|---|
| **MIL** | **SVS LIGHT** | **DTC NO.** | **2 DIGIT DIAGNOSIS CODE** | **DIAGNOSIS ITEM** | **INSPECTION ITEM** | **REFER PAGE** |
| Light | No light | P2565 | – | Nozzle position sensor failure range (High level) (VNT actuator position sensor signal too high) | • VNT controller<br>• Wire harness<br>• Turbocharger | 4-1319 |
| Light | No light | P259E | – | Nozzle operating range failure - NARROW (VNT actuator wiping error (too narrow range)) | • VNT controller<br>• Turbocharger | 4-1326 |
| Light | No light | P259F | – | Nozzle operating range failure - WIDE (VNT actuator wiping error (too wide range)) | • VNT controller<br>• Turbocharger | 4-1331 |
| No light | No light | P2635 | – | Supply Pump Low Flow/Performance | • Supply pump: by HINO DX II<br>• ECU (ECU connector) | 4-1336 |
| Light | No light | P268A | – | Fuel injector adjustment data error | • Engine ECU<br>• QR code | 4-1345 |
| Light | No light | P2696 | – | Fuel injector adjustment data error | • Engine ECU<br>• QR code | 4-1345 |
| Light | No light | P2A00 | – | NOx sensor ($O_2$ concentration measurement function) (SCR upstream) - Performance | • NOx sensor 1 (SCR upstream)<br>• Wire harness<br>• Air flow sensor<br>• NE sensor | 4-1351 |
| Light | No light | P2A01 | – | NOx sensor ($O_2$ concentration measurement function) (SCR downstream) - Performance | • NOx sensor 2 (SCR downstream)<br>• Wire harness<br>• Air flow sensor<br>• NE sensor | 4-1360 |
| No light | No light | P2BA9 | – | Insufficient Reagent Quality | • DEF quality sensor<br>• DEF concentration<br>• DEF tank | 4-1369 |
| Light | No light | U0073 | – | Engine ECU CAN communication bus for Emission control system - bus off | • VNT controller<br>• Wire harness | 4-1374 |
| Light | No light | U010A | – | Engine ECU CAN communication (EGR valve control) | • CAN circuit<br>• EGR controller | 4-1377 |
| Light | No light | U010C | – | VNT actuator CAN communication error | • CAN circuit<br>• VNT controller | 4-1380 |
| Light | No light | U010E | – | Engine ECU CAN communication (DeNOx ECU) | • CAN circuit<br>• DeNOx ECU (DCU)<br>• Engine ECU | 4-1383 |
| Light | No light | U029D | – | Engine ECU CAN communication (NOx sensor (SCR upstream)) | • CAN circuit<br>• NOx sensor 1<br>• Wire harness | 4-1386 |

| DIAGNOSTIC TROUBLE CODE (DTC) TABLE | | | | | | |
|---|---|---|---|---|---|---|
| **MIL** | **SVS LIGHT** | **DTC NO.** | **2 DIGIT DIAGNOSIS CODE** | **DIAGNOSIS ITEM** | **INSPECTION ITEM** | **REFER PAGE** |
| Light | No light | U029E | – | Engine ECU CAN communication (NOx sensor (SCR downstream)) | • CAN circuit<br>• NOx sensor 2<br>• Wire harness | 4-1389 |
| Light | No light | U02A2 | – | Engine ECU CAN communication (DEF tank sensor) | • CAN circuit<br>• DEF sensor<br>• Wire harness | 4-1392 |
| Light | No light | U02A3 | 03 | Engine ECU CAN communication bus for PM sensor - bus off | • PM sensor<br>• Wire harness | 4-1395 |
| No light | No light | U0301 | – | Software Incompatibility With DeNOx ECU | • DeNOx ECU | 4-1398 |
| Light | No light | U1001 | – | Engine ECU CAN communication bus for Vehicle control - bus off | • Wire harness<br>• ECU (ECU connector)<br>• Meter | 4-1401 |
| No light | No light | U110A | – | Engine ECU CAN communication (Vehicle ECU) | • CAN circuit<br>• Vehicle control ECU<br>• Wire harness | 4-1404 |

**NOTICE**

- **It is necessary to reset the ECU default value using the diagnosis tool at the time of supply pump service replacement. In addition, the ECU has a function enabling it to learn the performance of the supply pump at the time of ECU service replacement, so ensure sufficient time (several minutes) is available.**
- **When an injector is newly installed in a vehicle, it is necessary to enter the ID codes in the engine ECU using the HINO DX II .**

# GROUP SHARING THE SENSOR POWER SUPPLY TERMINAL

EN01H16F01030F03001011

- If one of the sensor power supplies fails, more than one malfunction codes will occur for the sensors sharing the sensor supply terminal. Check the sensors for short-circuits and whether the sensor supply circuit is in normal condition.

| ECU terminal | Sensor | DTC |
|---|---|---|
| V71 | PTO accelerator sensor | P1133 |
| | Differential pressure sensor | P1428 |

- If P0642 or P0652 has also occurred, the sensor supply of the ECU may be in abnormal condition or the GND may be shorted somewhere in the following sensor group.

| Group | Sensor | DTC |
|---|---|---|
| P0642 | Common rail pressure sensor | P0193 |
| | | P0192 |
| | Accelerator pedal position sensor 2 | P2127 |
| | Camshaft position sensor | P0340 |
| P0652 | Accelerator pedal position sensor 1 | P2122 |
| | Common rail pressure sensor (Sub) | P01A5 |
| | | P01A6 |
| | Differential pressure sensor | P1428 |
| | | P1427 |
| | PTO accelerator sensor | P1133 |

## GROUP SHARING THE SENSOR GND TERMINAL

EN01H16F01030F03001012

| ECU terminal | Sensor |
|---|---|
| E76 | Intercooler exit temperature sensor |
| | Common rail pressure sensor (sub) |
| E77 | Boost pressure sensor |
| | Intake air temperature sensor (intercooler outlet) |
| E58 | Exhaust gas temperature sensor 1 (ATC upstream) |
| | Exhaust gas temperature sensor 2 (ATC downstream) |
| | Air flow sensor |
| M54 | Fuel temperature sensor |
| | Intake air temperature sensor (intake manifold) |
| | Engine coolant temperature sensor 2 |
| V46 | Exhaust gas temperature sensor 3 (DOC inlet) |
| | Exhaust gas temperature sensor 4 (DPR inlet) |
| | Exhaust gas temperature sensor 5 (DPR outlet) |
| | Exhaust gas pressure sensor |
| V45 | Accelerator sensor 1 |
| | PTO accelerator sensor |

# ENGINE BASIC INSPECTION SHEET (ENGINE INSPECTION CHECK SHEET)

EN01H16F01030F03001013

* After inspection, indicate a check mark in the boxes below.

| Inspection steps | 1 | 2 | 3 | 4 | 5 | 6 | 7 | 8 | 9 |
|---|---|---|---|---|---|---|---|---|---|
| **Inspection area** | **Engine/ ECU** | **Fuel tank, filter** | **Air intake system parts** | **Sensor system** | **Exhaust system/ exhaust brake** | **VN turbocharger** | **EGR valve/ cooler** | **Injector** | **Supply pump** |
| Inspection items | Checking the diagnosis code. | Inspect the fuel tank. Low-grade fuel, contaminants or moisture inclusion | Inspect the air cleaner. Fouled element | Damage in the sensor harness Poor fit of the sensor coupler | Gas leak from tightened and fastened areas | Follow ability during inspection (Deviation ± 8 % or under) | Follow ability during inspection (Deviation ± 5 % or under) | Inspect the injector drive wiring. | Inspect the power supply. Actuation and wiring of main relay |
| | Check the program part No. | Inspect the fuel hose. Breakage, crush or clogging | Inspect the air flow meter for any degradation/ deterioration. Fouling and assembly direction | Inspect the rotation signal system. NE or G active flag and pulsar damage | Inspect actuation of the exhaust brake. | | Clogged cooler | Inspect the compression. | Inspect SCV resistance. |
| | Check the injector calibration data. | Inspect the fuel pipe. Connection to IN/ OUT and wrong assembly | Inspect the air hose. Looseness, crush and loose clamp | Inspect the accelerator sensor. 0 to 100 % voltage | Check a valve gap. | | | Inspect appearance of the injector. Presence of deposit at the end | Inspect SCV amperage during idling. Variance in amperage (± 40 mA) |

| Inspection steps | 1 | 2 | 3 | 4 | 5 | 6 | 7 | 8 | 9 |
|---|---|---|---|---|---|---|---|---|---|
| Inspection area | Engine/ ECU | Fuel tank, filter | Air intake system parts | Sensor system | Exhaust system/ exhaust brake | VN turbocharger | EGR valve/ cooler | Injector | Supply pump |
| Inspection items | Check the supply pump specification learning | Inspect the fuel filter. Element, separator and gauze filter | Inspect the boost sensor. Inspect the sensors and check the hoses for clogging. | Engine coolant temperature sensor Output voltage and resistance | | | | Injection quantity compensation between cylinders Check through data monitoring. | Inspect the set timing. Check gear phases. |
| | Check for free smoke. | Inspect air inclusion. Priming operation and air bleeding | Intercooler body and Damage in hoses | Common rail pressure sensor Inspect HINO DX II fuel leakage and check follow ability to actual level. | | | | Inspect a compensated injection quantity. Check writing. | |
| | ECU data monitor (Check HINO DX II reports.) | External fuel leakage Check pipes and hoses for leakage. | | | | | | Inspect an injection quantity at engine idling speed | |
| | | Internal fuel leakage Presence of an increase in engine oil | | | | | | | |

| Inspection steps | 1 | 2 | 3 | 4 | 5 | 6 | 7 | 8 | 9 |
|---|---|---|---|---|---|---|---|---|---|
| Inspection area | Engine/ ECU | Fuel tank, filter | Air intake system parts | Sensor system | Exhaust system/ exhaust brake | VN turbocharger | EGR valve/ cooler | Injector | Supply pump |
| Actions to be taken upon "fail" judgment | - Check parts based on each diagnosis code. | - Remove contaminants and fouling and replace low-grade fuel. | - Replace the element. | - Re-fit and repair damaged parts. | - Retighten. | - Inspect or replace the turbo charger. | - Clean or replace the valve. | - Check for disconnection. | - Inspect the relay upstream fuse. |
| | - Reprogram with the latest part No. | - Replace deformed parts. | - Clean or replace the air flow meter. | - Replace the sensor. | - Check air leakage and exhaust brake magnetic valve operation. | - Inspect or replace the turbo charger. | - Clean the cooler. | - Clean the end of the nozzle needle. | |
| | - Write a correct calibration data. | - Correct wrong assembly to proper assembly. | - Replace the hose and retighten the clamp. | | - Adjust a gap. | | | - Standard $\pm$ 5 q | |
| | - Perform the supply pump specification learning again. | - Replace the element. | - Replace the sensor. | | | | | | |
| | - Free acceleration method smoke test Standard: 10 % or less without muffler. | - Air bleeding | - Replace the hose and retighten the clamp. | | | | | | |
| | - Clear data after outputting a HINO DX II report. | - Inspect for fuel leakage (check connections and pipings). | | | | | | | |

**Standard injection quantity**

| | | J08E |
|---|---|---|
| Idling (normal) | r/min | 750 |
| | Injection quantity | 7 to 16 |
| Standard DPR filter differential pressure | r/min | 2,800 |
| | Differential pressure | 5 kPa {7 psi} or under |

# NO DTC

EN01H16F01030F03001014

## Engine low power, miss-fire, hesitation, knocking, running rough

| No | Parts | Check contents | Judgment | Check (Pass/Fail) | If fail |
|---|---|---|---|---|---|
| 1 | Injector | Cylinder cut-off test<br>(Detail on next page A) | Find knocking cylinder | | Injector replace |
| 2 | Air filter | Check restriction or contamination of the air cleaner element<br>(Detail on next page B) | No restriction<br>Genuine parts | | Filter Replace |
| 3 | Air hoses | Visually check<br>(Detail on next page C) | No bending<br>No leaking | | Fix Replace |
| 4 | Intake throttle | Visually check<br>Activation test by HINO DX II<br>(Detail on next page D) | No excessive dirt inside<br>Drilled 3 holes<br>Following target | | Drill holes |
| 5 | Mass air flow sensor | Mass air flow test at 100 % Free acceleration (Detail on next page E) | Difference between old and new sensor less than 10 % | | MAF Replace |
| 6 | Exhaust Brake | Visually check<br>Open and close butterfly valve<br>(Detail on next page F) | No sticking<br>No seizing | | ExB Replace |
| 7 | Engine | Compression test | More than 340 psi | | Overhaul |

**A** — **Cylinder cut-off test**

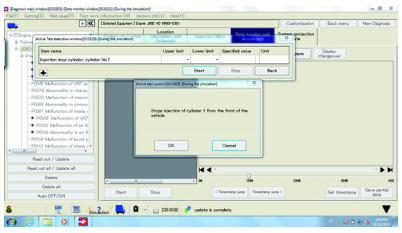

Engine
↓
Data monitor and Active test
↓
Active test Setting
↓
Injection stop cylinder, cylinder No.xx.
↓
Start/OK

1. Park vehicle with parking brake set, and chock whiles.
2. Set engine speed at 1,500 r/min by cruse control switch.
3. Check each cylinder for decreased level of knock. If the knock decreases during cut out test, that cylinder should be considered abnormal fueling injector.

**B** — **Air filter visual inspection**

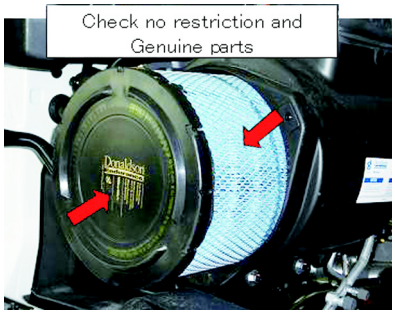


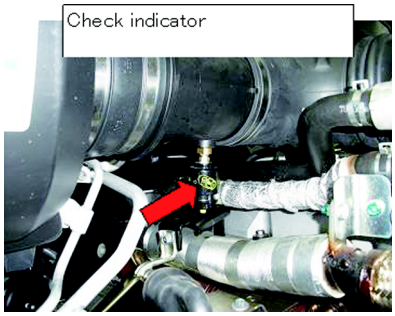

<table>
<tr><td>C</td><td colspan="3">Air hoses visual inspection</td></tr>
<tr><td></td><td> 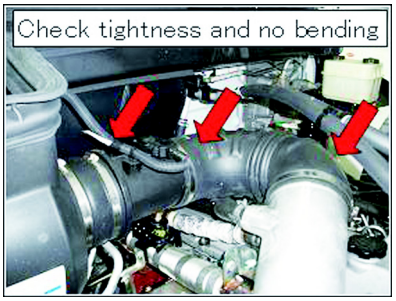
</td><td> 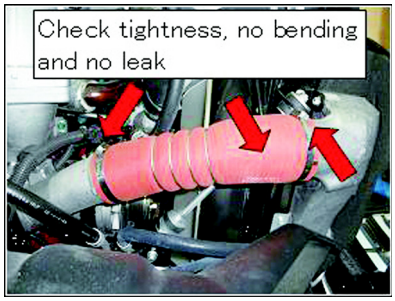
</td><td> 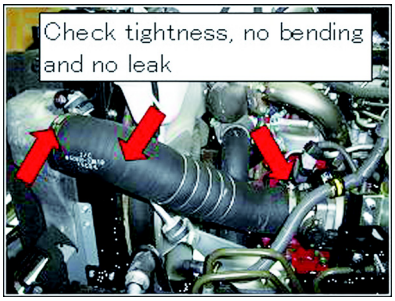
</td></tr>
<tr><td rowspan="4">D</td><td colspan="3">Intake throttle Visually check</td></tr>
<tr><td> 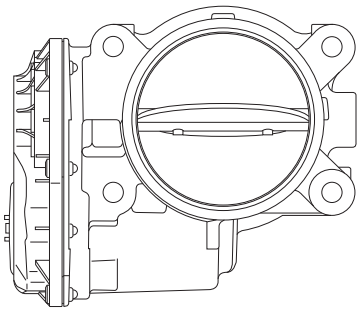 </td><td>No excessive dirt inside of throttle body and no movement between butterfly valve and shaft</td><td> 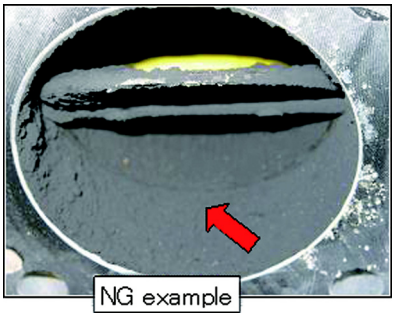
</td></tr>
<tr><td colspan="3">Intake throttle activation test</td></tr>
<tr><td> 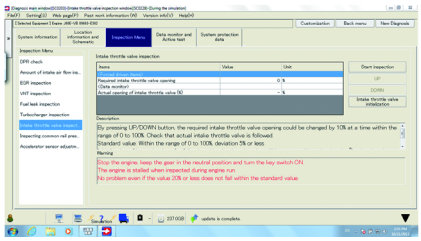 </td><td>Engine<br>↓<br>Inspection Menu<br>↓<br>Intake throttle valve inspection<br>↓<br>Start inspection</td><td>1. Park vehicle with parking brake set, and chock whiles.<br>2. When click [UP/DOWN] button, the directed Intake throttle valve position changes from 0 % to 90 % by 10 % step.<br>Check that actual intake throttle valve position is followed directed intake throttle valve.</td></tr>
<tr><td>E</td><td colspan="3">Mass air flow sensor check</td></tr>
<tr><td> 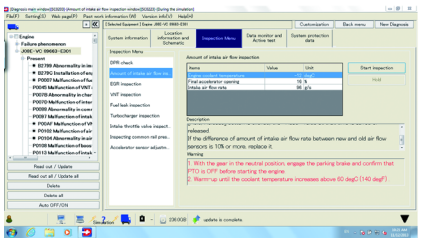 </td><td>Engine<br>↓<br>Inspection Menu<br>↓<br>Amount of intake air flow inspection<br>↓<br>Start inspection</td><td>1. Park vehicle with parking brake set, and chock whiles.<br>2. Make accelerator 100 % when parking.<br>Coolant temp must be more than 80 °C {176 °F}<br>3. Click Hold and write down the value. (A)<br>4. Replace initial MAF to bran new one.<br>5. Do again (2) and (3). (B)<br>Calculation form: {(B) - (A)} / (B) x 100 < 10</td></tr>
</table>

| | | |
|---|---|---|
| F | **Exh. Brake valve check** | |
| | 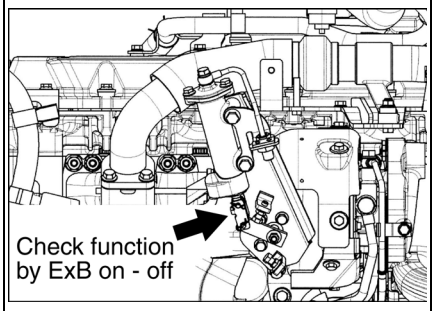 | 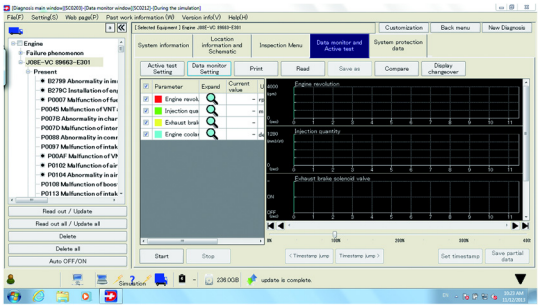 |

# SIMULTANEOUS MALFUNCTION OF MULTIPLE ELECTRIC SYSTEMS

EN01H16F01030F03001015

## Simultaneous malfunction of multiple electric systems

INFORMATION

**1. Technical description**

- Malfunction of multiple electronic systems occurred simultaneously and could not be diagnosed using the diagnostic tools.

**<Description of malfunction>**

- Simultaneous malfunction of 2 or more of the following electronic systems:
  ECU / DCU / Combination meter / VCS (Starting with the 2015 MY)
  ECU / DCU / BCU / Combination meter / VCS (2011 – 2014 MY)
  ECU (2005 – 2010 MY)

**2. DTC set condition**

(1) DTC detection condition
- Starter switch is set to "ON".
- Battery voltage is in the range of 10 V to 16 V.

(2) Judgement criteria
- Simultaneous malfunction of 2 or more electronic systems.

**3. Reset condition**

- Immediately after normal operation is restored.

**4. Indication, warning or system control regulation when the DTC is set.**

- –

**5. Symptoms on the vehicle when the DTC is set**

**<Symptoms on the vehicle due to backup control (fail safe function)>**

- –

**<Symptoms on the vehicle due to malfunction>**

- Start-up error and incorrect meter indications (tachometer and DEF remaining level) in addition to the HINO DX II communication error.

**6. Pre-inspection work**

- Check that the battery voltage is in the normal range.

**7. After-inspection work**

- The following electronic systems may be damaged by lightning:
  ECU / DCU / VCS / BCU / NOx sensor / EGR / VNT / Combination meter / ATM / ABS / ABS wheel speed sensor / Accelerator sensor / DRL / Radio / Rheostat switch
- Clear all past DTCs.
- Check that no DTC is detected after test drive.

**8. Estimated failure factors**

- Lightning accident.
- Battery cable came off with the engine running.
- Poor GND at the welding work.
- Fuse was blown.
- Looseness of harness connector.

## INSPECTION PROCEDURE

| 1 | Check the battery cables for sparking and looseness. |
|---|---|

1. 2 or more of the following electronic systems are out of communication with the HINO DX II .
- ECU / DCU / Combination meter / VCS (Starting with the 2015 MY)
- ECU / DCU / BCU / Combination meter / VCS (2011 – 2014 MY)
- ECU (2005 – 2010 MY)

**Was any failure found?**

| YES | NO |
|---|---|
| Go to step 2. | Go to the diagnosis procedure of each related DTC. |

| 2 | Check the battery cables |
|---|---|

1. Check the battery cables for sparking and looseness.

**NOTICE**

**If high voltage is generated due to loosened terminal screw, the power supply of each electronic system is likely to be damaged. Therefore, power is not supplied to the damaged systems and they won't function.**

**Was any failure found?**

| YES | NO |
|---|---|
| Repair the failure part. | Go to step 3. |

| 3 | Check the additional equipment |
|---|---|

1. Did the malfunction occur immediately after welding work for the additional equipment?

**Was it true?**

| YES | NO |
|---|---|
| The malfunction was caused by the welding work. | Go to step 4. |

| 4 | Check the fuses |
|---|---|

1. Check the fuses of the respective ECU.

**Was any failure found?**

| YES | NO |
|---|---|
| **Replace the fuse.** | **Go to step 5.** |

| 5 | Check for lightning strikes |
|---|---|

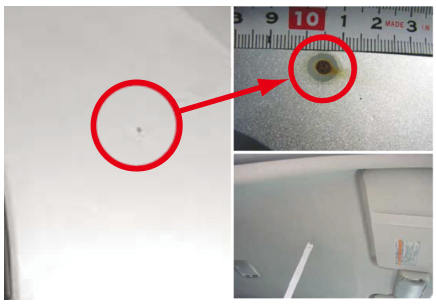

Body (ceiling)

SAPH16F010300051



Wheel rim

SAPH16F010300052

1. Check if the vehicle has suffered a lightning strike.

**NOTICE**

**Did you have heavy rain with lightning in the driving area around the day when the malfunction occurred?**

**It is a natural phenomenon and evidence may not be obvious. So, it is necessary to check the weather around the day when the malfunction occurred.**

**Was any failure found?**

| YES | NO |
|---|---|
| **There was a lightning strike. Go to the diagnosis procedure of each related DTC. Perform the "After-inspection work" of the INFORMATION section.** | **Go to step 6.** |

| 6 | Check the Combination meter, VCS ECU and ABS ECU |
|---|---|




SAPH16F010300053

1. For the following systems that are not sealed, perform an internal inspection and check if there are any burnout symptoms.

- Combination meter, VCS ECU and ABS ECU
  Check if there is any damage as shown in the ABS ECU in the left photos.

**Was any failure found?**

**YES**

**There was a lightning strike. Go to the diagnosis procedure of each related DTC.**
**Perform the "After-inspection work" of the INFORMATION section.**

**NO**

**It was considered that the trouble was caused by induction lightning from GND.**
**Check the weather on the day the trouble occurred.**
**And go to the diagnosis procedure of each related DTC.**
**Perform the "After-inspection work" of the INFORMATION section.**

# DTC: P0005

EN01H16F01030F03001016

## P0005: Fuel Cut Valve stuck closed

INFORMATION

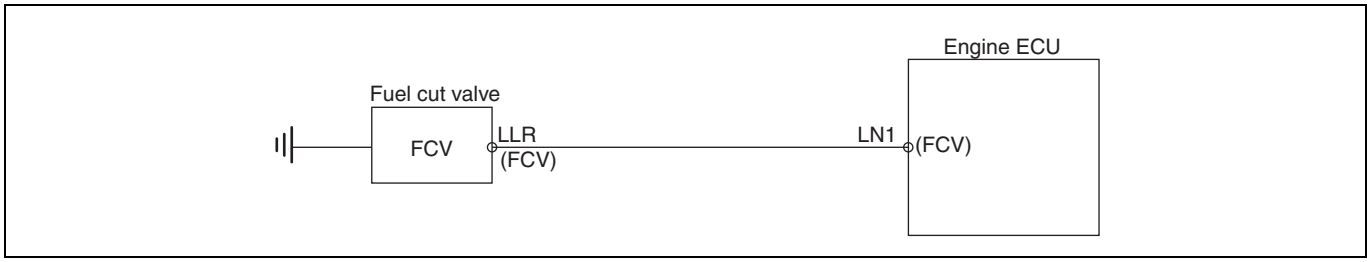


SAPH16F010300054

**1. Technical description**

- The engine ECU monitors the fuel pressure in the aftertreatment fuel pipe based on the value of the aftertreatment fuel pressure sensor.

**<Description of malfunction>**

- Sticking of the fuel cut valve (FCV) was detected.

**2. DTC set condition**

(1) DTC detection condition

- The engine revolution is 700 r/min or more.
- The difference between the actual fuel pressure and the target fuel pressure is 1 MPa or less.

(2) Judgment criteria

- The fuel pressure in the aftertreatment fuel pipe is 0 MPa or less when the engine revolution is 750 r/min, and remains at 0.2 MPa or less for 30 seconds even when the engine revolution becomes 1,000 r/min or more.

**3. Reset condition**

- Immediately after normal status is resumed

**4. Indication, warning or system control regulation when the DTC is set.**

- MIL: ON
- SVS light: OFF

**5. Symptoms on the vehicle when the DTC is set**

**<Symptoms on the vehicle due to backup control (fail safe function)>**

- –

**<Symptoms on the vehicle due to malfunction>**

- DPR automatic regeneration may not be performed properly.

**6. Pre-inspection work**

- Check that the battery voltage is in the normal range.

**7. After-inspection work**

- Clear all past DTCs.
- Check that no DTC is detected after test drive.

**8. Estimated failure factors**

- Power supply for fuel cut valve.
- Fuel leakage (loose joint bolt), clogging, crush, and wrong assembly in fuel pipe.
- Defect of fuel cut valve.

## INSPECTION PROCEDURE: P0005

| 1 | Check the DTC detected [HINO DX II ] |
|---|---|

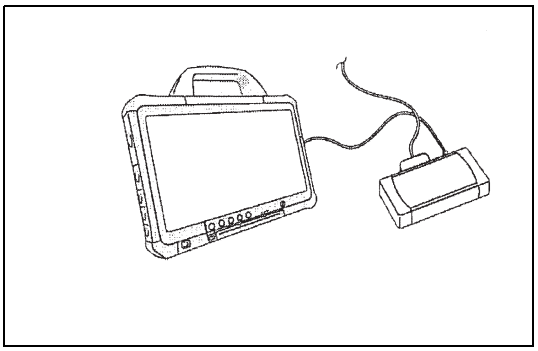

SAPH16F010300055

1. Set the starter switch to the "LOCK" position.
2. Connect the diagnostic system (HINO DX II ) to the vehicle.
3. Set the starter switch to the "ON" position.
4. Select [Engine] on the screen of HINO DX II and check if the DTC P0005, P0006, P0007, P016F has been detected.

**Is any DTC other than P0005 detected?**

**YES**

**Go to the relevant DTC-specific trouble-shooting.**

**NO**

**Go to step 2.**

| 2 | Inspect the power supply for the fuel cut valve |
|---|---|

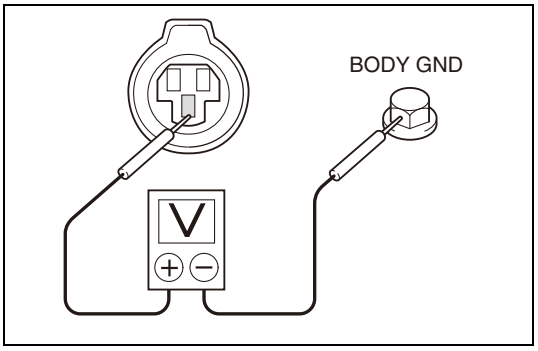


SAPH16F010300056

1. Set the starter switch to the "LOCK" position.
2. Disconnect the connector from the fuel cut valve.
3. Set the starter switch to the "ON" position.
4. Using the electrical tester, measure the pressure between the fuel cut valve vehicle-side connector FCV terminal and ground.

| Measurement conditions | Tester connections | Standard values |
|---|---|---|
| **Starter switch: LOCK** | **Fuel cut valve vehicle-side connector FCV terminal –Ground** | **8 V or more** |

**Do the measurements meet the standard value?**

**YES**

**Go to step 3.**

**NO**

**Inspect the power supply circuit of the engine ECU.**

| 3 | Inspect the fuel cut valve downstream pipe 1 |
|---|---|

1. Check if any of the following defects is found in the pipe between the fuel cut valve and the fuel dosing valve.

- Fuel leakage (loose joint bolt)
- Crush
- Wrong assembly

**Was any failure found?**

**YES**

**Repair or replace the defective part. After repair or replacement, bleed air from the pipe.**

**NO**

**Go to step 4.**

| 4 | Inspect the fuel cut valve downstream pipe 2 |
|---|---|

1. Bleed air from the fuel cut valve downstream pipe and also check that there is no clogging in the pipe.

**<Inspection procedure>**

- Set the starter switch to the "ON" position.
- Loosen the downstream side joint bolt.
- Slowly push the feed pump on the fuel pump until fuel comes out.

**⚠ CAUTION**
**Use care, as a large amount of fuel may come out if the feed pump is pushed excessively.**

**Is fuel drained? Is bleeding air completed?**

**YES**

**Replace the fuel cut valve.**

**NO**

**Go to step 5.**

| 5 | Inspect the fuel cut valve upstream pipe 1 |
|---|---|

1. Check if any of the following defects is found in the pipe between the fuel pump and the fuel cut valve.

- Fuel leakage (loose joint bolt)
- Crush
- Wrong assembly

**Was any failure found?**

**YES**

**Repair or replace the defective part. After repair or replacement, bleed air from the pipe.**

**NO**

**Go to step 6.**

| 6 | Inspect the fuel cut valve upstream pipe 2 |
|---|---|

1. Bleed air from the fuel cut valve upstream pipe and also check that there is no clogging in the pipe.

**<Inspection procedure>**

- Set the starter switch to the "ON" position.
- Loosen the upstream side joint bolt.
- Slowly push the feed pump on the fuel pump until fuel comes out.

**⚠ CAUTION**
**Use care, as a large amount of fuel may come out if the feed pump is pushed excessively.**

**Is fuel drained? Is bleeding air completed?**

**YES**

**Replace the fuel cut valve.**

**NO**

**Clean or replace the fuel cut valve upstream pipe.**

# DTC: P0006 and P0007

EN01H16F01030F03001017

## P0006: Malfunction of fuel cut valve (Low)

INFORMATION

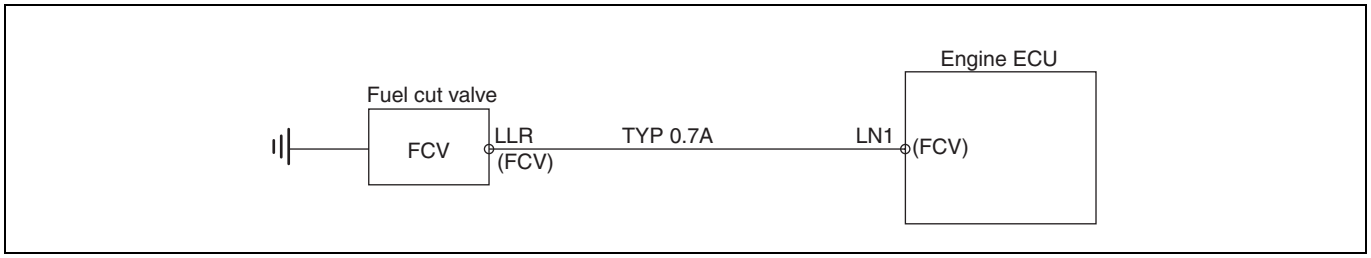


SAPH16F010300057

**1. Technical description**

- –

**<Description of malfunction>**

- Fuel cut valve is not working properly.
- Possible magnetic valve failure or harness GND short-circuit

**2. DTC set condition**

(1) DTC detection condition

- Fuel cut valve inactivity request is in progress.
- Starter switch ON.
- Battery voltage is in the range of 10 V to 16 V.

(2) Judgment criteria

- The condition that the fuel cut valve circuit voltage is 2.8 V or less remains for 3 seconds or more.

**3. Reset condition**

- Immediately after normal operation is restored.

**4. Indication, warning or system control regulation when the DTC is set.**

- MIL: ON
- SVS light: OFF

**5. Symptoms on the vehicle when the DTC is set**

**<Symptoms on the vehicle due to backup control (fail safe function)>**

- –

**<Symptoms on the vehicle due to malfunction>**

- DPR automatic regeneration may not be performed properly.

**6. Pre-inspection work**

- Check that the battery voltage is in the normal range.

**7. After-inspection work**

- Clear all past DTCs.
- Check that no DTC is detected after test drive.

**8. Estimated failure factors**

- GND short-circuit in fuel cut valve signal line
- Malfunction of fuel cut valve
- Malfunction of engine ECU

## P0007: Malfunction of fuel cut valve (High)

INFORMATION

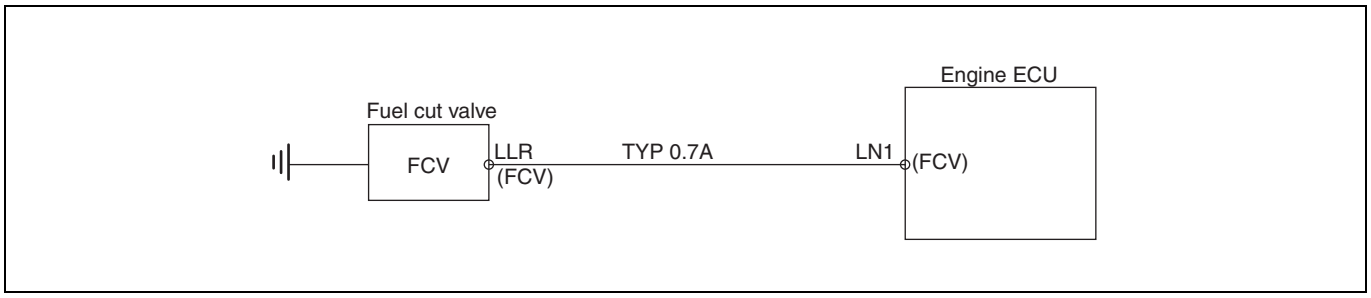


SAPH16F010300058

**1. Technical description**

- –

**<Description of malfunction>**

- Fuel cut valve is not working properly.
- Possible magnetic valve failure or +B short-circuit or disconnection

**2. DTC set condition**

(1) DTC detection condition

- Fuel cut valve inactivity request is in progress.
- Starter switch ON.
- Battery voltage is in the range of 10 V to 16 V.

(2) Judgment criteria

- The condition that the fuel cut valve circuit voltage is 3 V or more remains for 3 seconds or more.

**3. Reset condition**

- Immediately after normal operation is restored.

**4. Indication, warning or system control regulation when the DTC is set.**

- MIL: ON
- SVS light: OFF

**5. Symptoms on the vehicle when the DTC is set**

**<Symptoms on the vehicle due to backup control (fail safe function)>**

- –

**<Symptoms on the vehicle due to malfunction>**

- DPR automatic regeneration may not be performed properly.

**6. Pre-inspection work**

- Check the battery voltage and make sure it is okay.

**7. After-inspection work**

- Clear all past DTCs.
- Check that no DTC is detected after test drive.

**8. Estimated failure factors**

- +B short-circuit or disconnection in exhaust brake drive signal line.
- Malfunction of exhaust brake magnetic valve.
- Malfunction of engine ECU.

## INSPECTION PROCEDURE: P0006 and P0007

| 1 | Inspect the fuel cut valve connector |
|---|---|

1. Check the connection of the fuel cut valve connector (looseness and poor contact).

**Was any failure found?**

**YES**

**Connect securely, repair if needed.**
**Perform "After-inspection work" of INFORMATION section.**

**NO**

**Go to step 2.**

| 2 | Inspect the fuel cut valve |
|---|---|

1. Check the installation of the fuel cut valve.

**Was any failure found?**

**YES**

**Install the fuel cut valve correctly.**
**Replace the fuel cut valve if it is damaged.**
**Perform "After-inspection work" of INFORMATION section.**

**NO**

**Go to step 3.**

## 3 Inspect the fuel cut valve unit

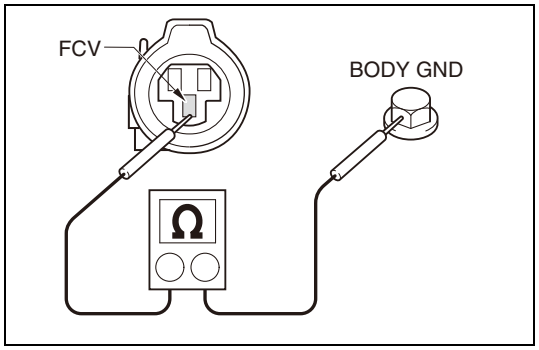

SAPH16F010300059

1. Set the starter switch to the "LOCK" position.
2. Disconnect the fuel cut valve connector.
3. Use the electrical tester to measure the resistance between the terminals of the fuel cut valve FCV and ground.

| Measurement conditions | Tester connections | Standard values |
|---|---|---|
| Starter switch: LOCK | Fuel cut valve FCV – Ground | 20 °C {68 °F}: 8.0 – 9.2 Ω |

**Do the measurements meet the standard value?**

**YES**

**Go to step 4.**

**NO**

**Replace the fuel cut valve.**
**Perform "After-inspection work" of INFORMATION section.**

## 4 Inspect for short-circuit of the fuel cut valve harness

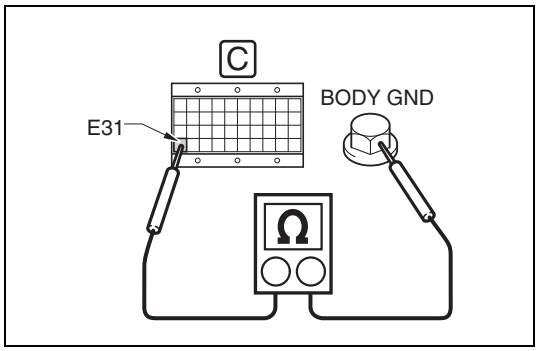

SAPH16F010300060

1. Connect the signal check harness to the engine ECU (Do not connect the harness to the ECU).
2. Use the electrical tester to measure the resistance between the terminals of the engine ECU (signal check harness) FCV (E31) terminal and ground.

| Measurement conditions | Tester connections | Standard values |
|---|---|---|
| Starter switch: LOCK | Engine ECU (signal check harness) FCV (E31) – Ground | ∞ Ω |

**Do the measurements meet the standard value?**

**YES**

**Go to step 5.**

**NO**

**Repair or replace the harness.**
**Perform "After-inspection work" of INFORMATION section.**

## 5 Inspect disconnection of the fuel cut valve harness

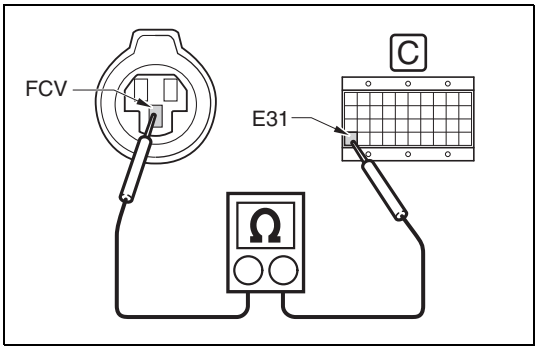


SAPH16F010300061

1. Use the electrical tester to measure the resistance between the terminals of the fuel cut valve vehicle-side connector and the engine ECU.

| Measurement conditions | Tester connections | Standard values |
|---|---|---|
| **Starter switch: LOCK** | **Fuel cut valve vehicle-side connector – Engine ECU (signal check harness) FCV – FCV (E31)** | **2 Ω or less** |

**Do the measurements meet the standard value?**

**YES**

**Go to step 6.**

**NO**

**Repair or replace the harness.**
**Perform "After-inspection work" of INFORMATION section.**

## 6 Check the DTC detected (Engine ECU)

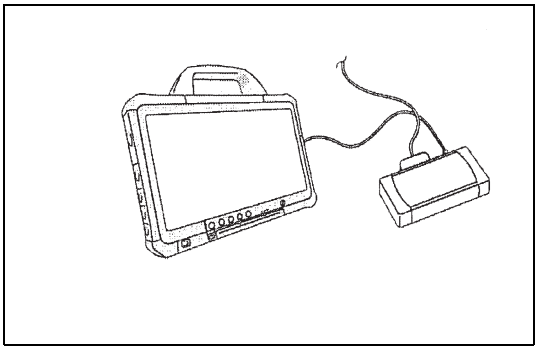

SAPH16F010300062

1. Connect the vehicle to HINO DX II .
2. Set the starter switch to the "ON" position.
3. Select [Engine] and check if the DTC (P0006 or P0007) has been detected.

**Has DTC (P0006 or P0007) been detected?**

**YES**

**Replace the engine ECU.**
**Perform "After-inspection work" of INFORMATION section.**

**NO**

**Procedure completed.**
**Perform "After-inspection work" of INFORMATION section.**

# DTC: P0016

EN01H16F01030F03001018

## P0016: Crankshaft position sensor and Camshaft position sensor - rationality

INFORMATION

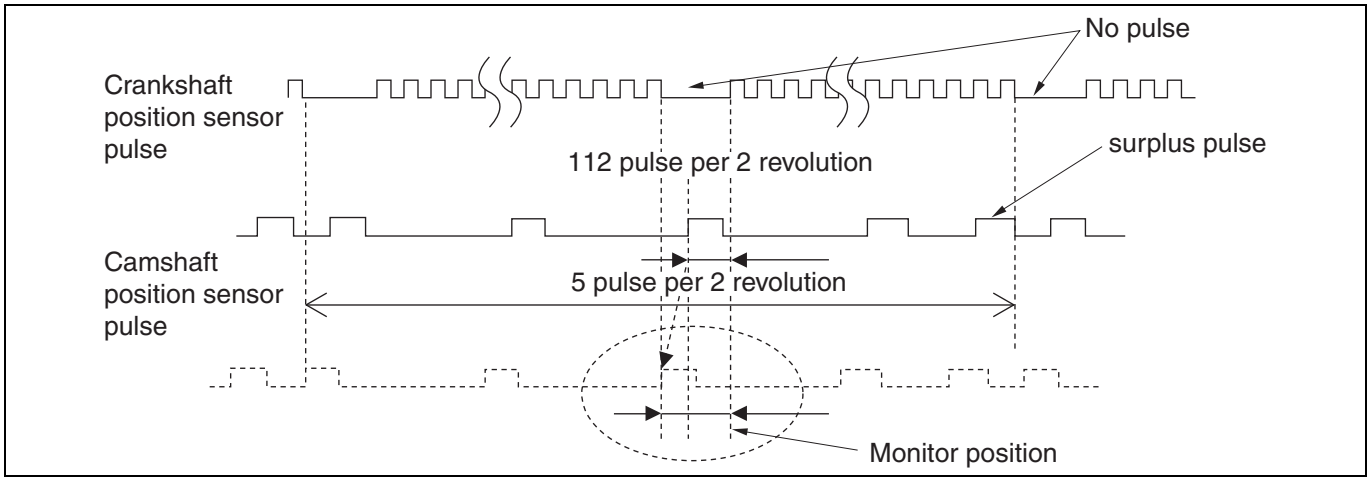


SAPH16F010300063

**1. Technical description**

- A phase difference (deviation) between the crankshaft position sensor (Engine speed main sensor) and camshaft position sensor (Engine speed sub sensor) is diagnosed.

**<Description of malfunction>**

- Detect the phase difference between crankshaft position sensor (Engine speed main sensor) pulse and camshaft position sensor (Engine speed sub sensor ) pulse.

**2. DTC set condition**

(1) DTC detection condition

- Starter switch ON.
- Battery voltage is in the range of 10 V to 16 V.
- Engine speed is in the range from 700 to 1,000 r/min.
- Engine coolant temperature is 60 °C {140 °F} or higher.
- A difference between an actual engine speed and a target engine speed is 20 r/min or less.

(2) Judgment criteria

- A phase difference between the crankshaft position sensor (Engine speed main sensor) pulse and camshaft position sensor (Engine speed sub sensor ) pulse remains 13° or less or 23° or greater for 1 second or longer.

**3. Reset condition**

- After restoration to normal condition.

**4. Indication, warning or system control regulation when the DTC is set.**

- MIL: ON
- SVS light: OFF

**5. Symptoms on the vehicle when the DTC is set**

**<Symptoms on the vehicle due to backup control (fail safe function)>**

- –

**<Symptoms on the vehicle due to malfunction>**

- –

**6. Pre-inspection work**

- Check that the battery voltage is in the normal range.

**7. After-inspection work**

- Clear all past DTCs.
- Check that no DTC is detected after test drive.

**8. Estimated failure factors**

- Miss assembly of the camshaft gear.
- Miss assembly of the flywheel.
- Miss installation of the crankshaft position sensor (Engine speed main sensor).
- Miss installation of the camshaft position sensor (Engine speed sub sensor).

## INSPECTION PROCEDURE: P0016

| 1 | Inspect the camshaft gear |
|---|---|

1. Check that the camshaft gear is properly assembled.

**HINT**

**Refer to the section "TIMING GEAR" in the chapter "ENGINE MECHANICAL (J08E)" (S5-CJ08E14* or S5-UJ08E14*).**

**Was any failure found?**

**YES**

**Assemble the camshaft gear properly.**
**Refer to the section "TIMING GEAR" in the chapter "ENGINE MECHANICAL (J08E)" (S5-CJ08E14* or S5-UJ08E14*).**

**NO**

**Go to step 2.**

| 2 | Inspect the flywheel |
|---|---|

1. Check that the flywheel is properly assembled.

**HINT**

**Refer to the section "FLYWHEEL AND FLYWHEEL HOUSING" in the chapter "ENGINE MECHANICAL (J08E)" (S5-CJ08E14* or S5-UJ08E14*).**

**Was any failure found?**

**YES**

**Assemble the flywheel properly.**
**Refer to the section "FLYWHEEL AND FLYWHEEL HOUSING" in the chapter "ENGINE MECHANICAL (J08E)" (S5-CJ08E14* or S5-UJ08E14*).**

**NO**

**Go to step 3.**

| 3 | Inspect Crankshaft position sensor (Engine speed main sensor), Camshaft position sensor (Engine speed sub sensor) |
|---|---|

1. Check that the sensor are installed to the proper position.

**Was any failure found?**

**YES**

**Install the crankshaft position sensor (engine speed main sensor) and the camshaft position sensor (engine speed sub sensor) in proper locations.**

**NO**

**Procedure completed.**
**Perform "After-inspection work" of INFORMATION section.**

# DTC: P0027

EN01H16F01030F03001019

## P0027: Exhaust Brake Performance

INFORMATION

**1. Technical description**

**<Description of malfunction>**

- The engine ECU detected sticking of the exhaust brake valve.

**2. DTC set condition**

(1) DTC detection condition

- DPR regeneration is in process.
- The vehicle speed is 0 km/h {0 mph}.
- The time of 60 seconds has elapsed after the exhaust brake was actuated.

(2) Judgment criteria

- The difference between the fuel injection quantity while the exhaust brake is working and the fuel injection quantity when the exhaust brake is not actuated is 5 $mm^3$/st or less. And also, the difference between the air flow while the exhaust brake is working and the air flow when the exhaust brake is not actuated is -50 mg/cyl or more.

**3. Reset condition**

- Immediately after normal status is resumed

**4. Indication, warning or system control regulation when the DTC is set.**

- MIL: ON
- SVS light: OFF

**5. Symptoms on the vehicle when the DTC is set**

**<Symptoms on the vehicle due to backup control (fail safe function)>**

- –

**<Symptoms on the vehicle due to malfunction>**

- The exhaust brake does not work.
- DPR regeneration is not terminated successfully.

**6. Pre-inspection work**

- Check that the battery voltage is in the normal range.

**7. After-inspection work**

- Clear all past DTCs.
- Check that no DTC is detected after test drive.

**8. Estimated failure factors**

- Abnormality in characteristics of air flow sensor
- Diesel throttle sticking
- Bend, clogging, and crack of piping and hose
- Improper adjustment of exhaust brake valve
- Malfunction of exhaust brake valve

## INSPECTION PROCEDURE: P0027

| 1 | Check the DTC detected 1 [HINO DX II ] |
|---|---|

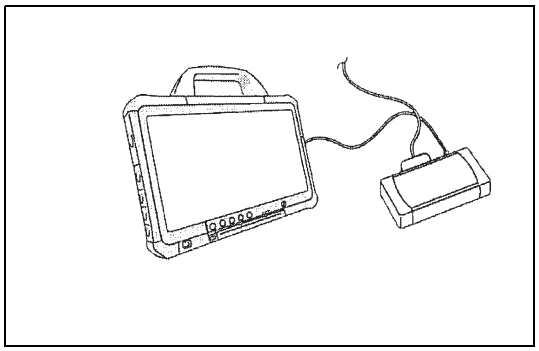

SAPH16F010300064

1. Set the starter switch to the "LOCK" position.
2. Connect the vehicle to HINO DX II .
3. Set the starter switch to the "ON" position.
4. Select [Engine], and check if any DTC listed below other than P0027 has been detected.
   P0101, P04D5, P2101

**Has a DTC other than P0027 been detected?**

**YES**

**Go to diagnosis procedure of a related DTC.**

**NO**

**Go to step 2.**

| 2 | Inspect the exhaust brake valve piping and hose |
|---|---|

1. Check the piping and hose, connected to the exhaust brake valve, for bend, clogging, and crack.

**Was any failure found?**

**YES**

**Connect securely, repair if needed.**

**NO**

**Go to step 3.**

| 3 | Inspect the exhaust brake valve |
|---|---|

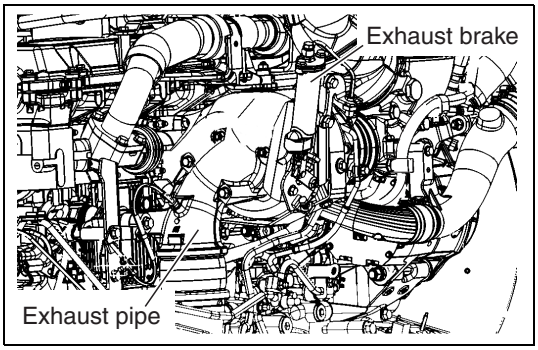

SAPH16F010300065

1. Check the exhaust brake valve for unease and sticking.

**Was any failure found?**

**YES**

**Clean the exhaust brake valve. Replace if needed. After clearing or replacement, go to step 4.**

**NO**

**Go to step 5.**

| 4 | Check the DTC detected 2 [HINO DX II ] |
|---|---|

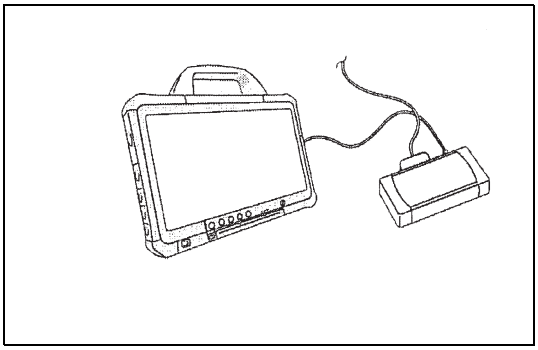
SAPH16F010300066

1. Perform a DPR forced regeneration.
2. After completion of regeneration, reload the DTC and check if the DTC P0027 has been detected.

**Has DTC P0027 been detected?**

**YES**

**Go to step 5.**

**NO**

**Procedure completed.**

| 5 | Inspect the exhaust brake valve [HINO DX II ] |
|---|---|

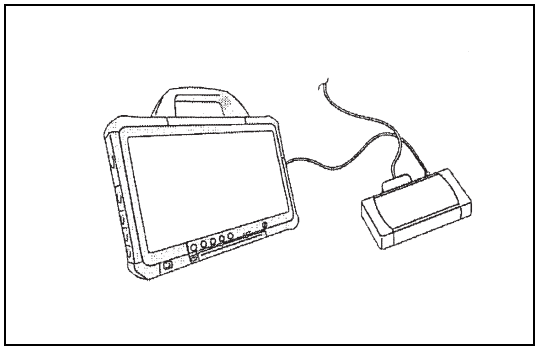

SAPH16F010300067

1. Warm up the engine. (Coolant temperature: 80 °C {176 °F} or more)

2. Turn OFF the devices that place load on the engine, such as the air conditioner.
<Inspection procedure>
(1) Select [Engine] on the screen of HINO DX II .
(2) Select [Data monitor Setting] and [Active test Setting].
(3) Select [Target rpm] from [Active test Setting] and set the engine revolution to 980 r/min.
(4) Select [Injection quantity] from [Data monitor Setting].
(5) Turn ON/OFF the exhaust brake switch, and check the difference between the injection quantity of the injector while the exhaust brake is working and the injection quantity when the exhaust brake is not actuated.

| Measurement conditions | Standard values |
|---|---|
| • **Engine revolution: 980 r/min**<br>• **Engine coolant temperature: 80 °C {176 °F} or more**<br>• **Turn OFF the air conditioner, and other devices that place load on the engine.** | **10 – 14 $mm^3$/st** |

**Do the measurements meet the standard value? (There shall be a change in the injection quantity between while the exhaust brake is working and when it is not actuated.)**

**YES**

**Go to step 6.**

**NO**

**Adjust the butterfly opening of the exhaust brake.**

| 6 | Check the DTC detected [HINO DX II ] |
|---|---|

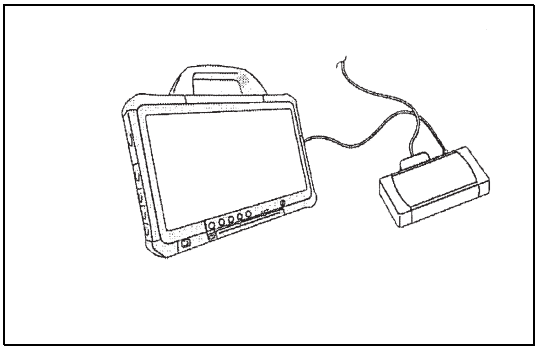

SAPH16F010300068

1. Perform a DPR forced regeneration.
2. After regeneration, select [Engine] and check if DTC P0027 has been detected.

**Has DTC P0027 been detected?**

**YES**

**Replace the engine ECU.**

**NO**

**Procedure completed.**

# DTC: P003A

EN01H16F01030F03001020

## P003A: Initialization failure (VNT actuator initialize error)

INFORMATION

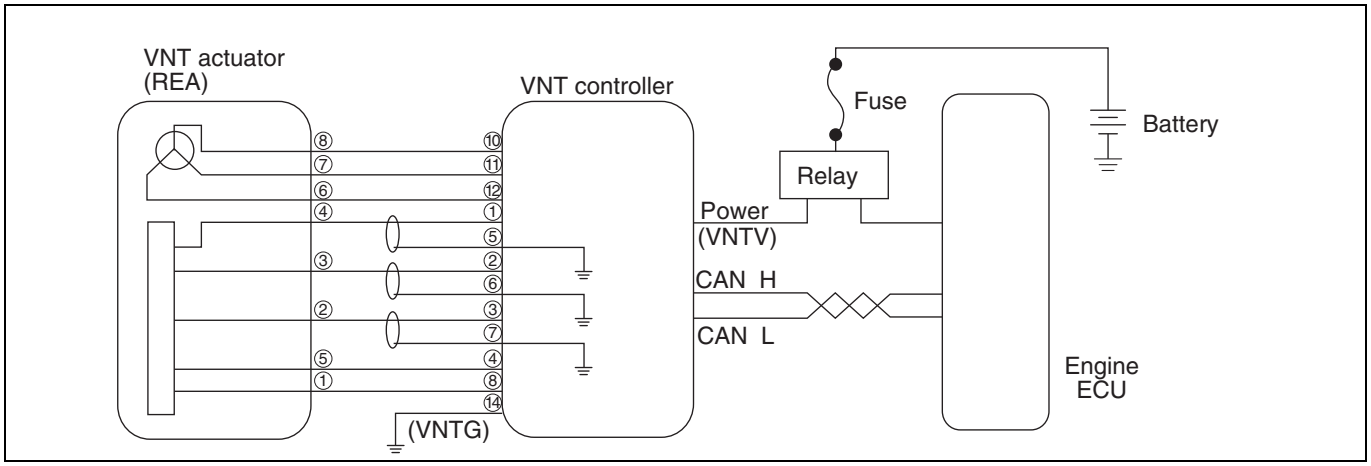


SAPH16F010300069

**1. Technical description**

- The VNT moves the nozzle vane steplessly by the REA (Rotary Electric Actuator) to control the turbo speed and boost pressure.
- The REA has a sensor to detect the movement of the actuator, always monitoring the reading and actual value of the nozzle vane opening.
- Wiping operation is performed while the engine is stopped for the purpose of removing soot and oil coming out from the range of vane operation and checking the turbo mechanical operating range for abnormality.

**<Description of malfunction>**

- –

**2. DTC set condition**

(1) DTC detection condition

- While the engine is in operation: Always
- While the engine is stopped: During wiping operation

(2) Judgment criteria

| Item | Details (Reference) |
|---|---|
| 1. Initialization failure | When the amount of operation after power has been turned ON is larger than HI range, or when the Hall IC output does not become constant after 5 seconds has elapsed |

**3. Reset condition**

- After normal operation is restored and the starter switch is turned OFF.

**4. Indication, warning or system control regulation when the DTC is set.**

- MIL: ON
- SVS light: OFF
- Engine output is restricted.
- Cruise control function is not available.
- Auxiliary brake function is not available.

**5. Symptoms on the vehicle when the DTC is set**

**<Symptoms on the vehicle due to backup control (fail safe function)>**

- Engine output is insufficient.
- Cruise control does not work.
- Auxiliary brake does not work.

**<Symptoms on the vehicle due to malfunction>**

- –

**6. Pre-inspection work**

- Check that the battery voltage is in the normal range.

**7. After-inspection work**

- Clear all past DTCs.
- Check that no DTC is detected after test drive.

**8. Estimated failure factors**

- VNT link is stuck or cannot operate due to rust, etc.
- External link is disconnected.

## INSPECTION PROCEDURE: P003A

| 1 | Check the DTC detected 1 (Engine ECU) [HINO DX II ] |
|---|---|

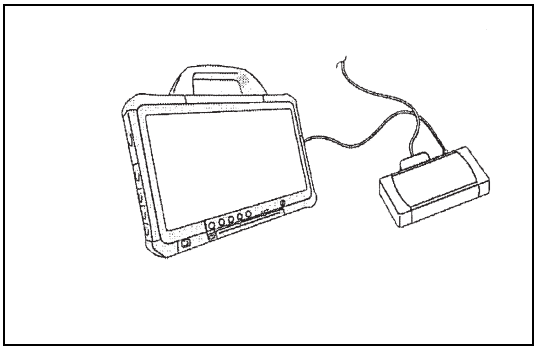

SAPH16F010300070

1. Connect the vehicle to HINO DX II .
2. Set the starter switch to the "ON" position.
3. Select [Engine] and check if any DTC other than P003A (for example, U010C) has been detected.

**HINT**
**Due to CAN communication failures, P003A may have been detected.**

**Has a DTC other than P003A been detected?**

**YES**

**Go to diagnosis procedure of a related DTC. After repairing, go to step 2.**

**NO**

**Go to step 3.**

| 2 | Check the DTC detected 2 (Engine ECU) [HINO DX II ] |
|---|---|

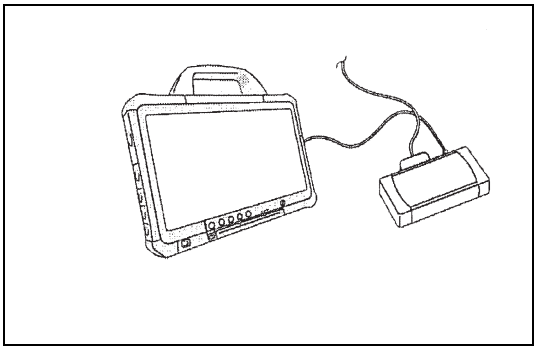

SAPH16F010300071

1. Set the starter switch to the "ON" position.
2. Select [Engine] and check if P003A has been detected.

**Has DTC P003A been detected?**

**YES**

**Go to step 3.**

**NO**

**Procedure completed.**
**Perform "After-inspection work" of INFORMATION section.**

| 3 | Inspect the operation of the VNT controller [HINO DX II ] |
|---|---|

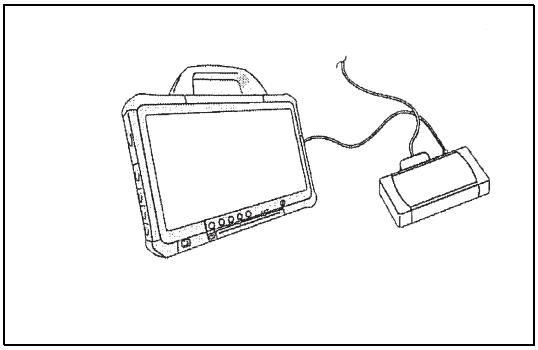

SAPH16F010300072

1. Set the starter switch to the "ON" position.
2. Erase the trouble history using HINO DX II .
3. Set the starter switch to the "LOCK" position.
4. Set the starter switch to the "ON" position again.
5. Select [Engine] and check if P003A has been detected.

**HINT**
**Turn the starter switch OFF and ON verifies the wiping operation of the VNT actuator (DC motor).**

| Measurement conditions |
|---|
| Starter switch: LOCK → ON |

**Has DTC P003A been detected?**

**YES**

**Replace the turbocharger.**
**Perform "After-inspection work" of INFORMATION section.**

**NO**

**Go to step 4.**

| 4 | Check the response delay of the VNT controller [HINO DX II ] |
|---|---|

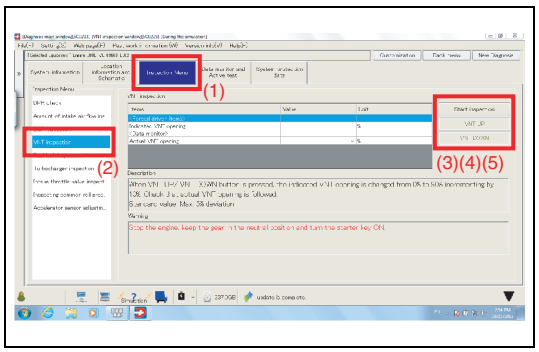


SAPH16F010300073

1. Select [Inspection Menu]_[VNT inspection] from the menu, and inspect the response delay at the Target VNT position and Actual VNT position.

**⚠ CAUTION**
**Perform the inspection while the engine is stopped to avoid engine damages.**

<Inspection procedure>
(1) Select [Inspection Menu].
(2) Select [VNT inspection].
(3) Click [Start inspection].
(4) Click [VNT UP].
• Inspect the response delay at each step of the Target VNT position and Actual VNT position from 0 to 90 %.
(5) Click [VNT DOWN].
• Inspect the response delay at each step of the Target VNT position and Actual VNT position from 90 to 0 %.

**HINT**
**The VNT opening position changes of 10 % per step between 0 – 90 %.**

| Standard values |
|---|
| The response delay should be less than 3 seconds. |

**Are the measurements within standard value?**

**YES**

**Procedure completed.**
**Perform "After-inspection work" of INFORMATION section.**

**NO**

**Replace the turbocharger.**
**Perform "After-inspection work" of INFORMATION section.**

# DTC: P0045

EN01H16F01030F03001021

## P0045: DC motor open circuit (VNT actuator motor open circuit)

INFORMATION

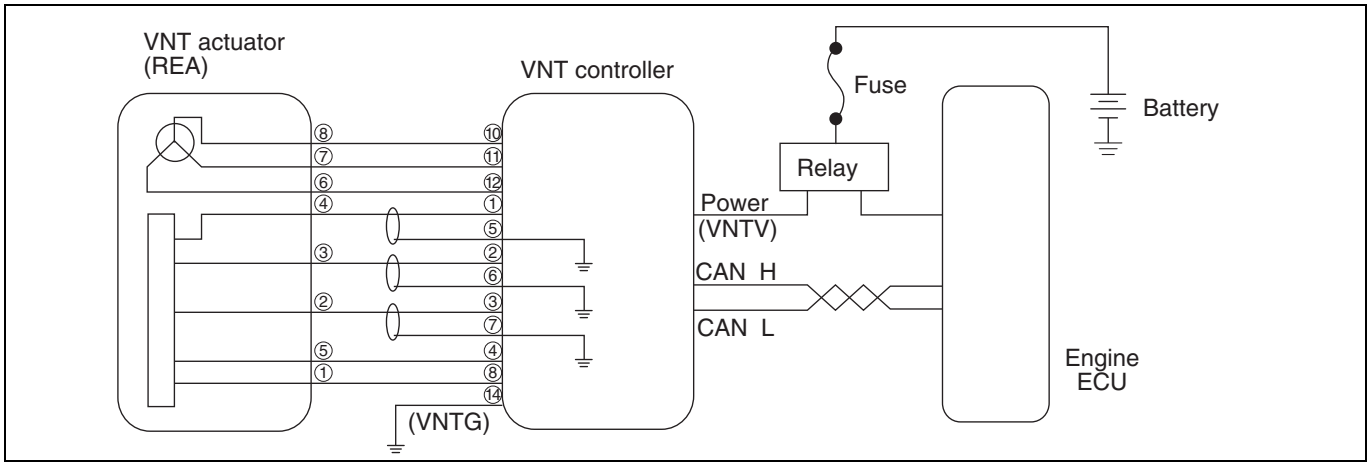


SAPH16F010300074

**1. Technical description**

- The VNT moves the nozzle vane steplessly by the REA (Rotary Electric Actuator) to control the turbo speed and boost pressure.
- The REA has a sensor to detect the movement of the actuator, always monitoring the reading and actual value of the nozzle vane opening.
- Wiping operation is performed while the engine is stopped for the purpose of removing soot and oil coming out from the range of vane operation and checking the turbo mechanical operating range for abnormality.

**<Description of malfunction>**

- –

**2. DTC set condition**

(1) DTC detection condition

- While the engine is in operation: Always
- While the engine is stopped: During wiping operation

(2) Judgment criteria

| Item | Details (Reference) | | | |
|---|---|---|---|---|
| Motor terminal or coil disconnection | When 1st, 2nd, and 3rd conditions simultaneously form in the following matrix: | | | |
| | | 1st | 2nd | 3rd |
| | Terminal U | Output Batt. voltage | ≤ 1 V (Condition (c)) | ≤ 1 V (Condition (e)) |
| | Terminal V | ≤ 1 V (Condition (a)) | Output Batt. voltage | ≤ 1 V (Condition (f)) |
| | Terminal W | ≤ 1 V (Condition (b)) | ≤ 1 V (Condition (d)) | Output Batt. voltage |
| | Condition of motor open circuit | (a) OR (b) | (c) OR (d) | (e) OR (f) |

**3. Reset condition**

- After normal operation is restored and the starter switch is on the "LOCK" position.

**4. Indication, warning or system control regulation when the DTC is set.**

- MIL: ON
- SVS light: OFF
- Engine output is restricted.
- Cruise control function is not available.
- Auxiliary brake function is not available.

**5. Symptoms on the vehicle when the DTC is set**

**<Symptoms on the vehicle due to backup control (fail safe function)>**

- Engine output is insufficient.
- Cruise control does not work.
- Auxiliary brake does not work.

**<Symptoms on the vehicle due to malfunction>**

- –

**6. Pre-inspection work**

- Check that the battery voltage is in the normal range.

**7. After-inspection work**

- Clear all past DTCs.
- Check that no DTC is detected after test drive.

**8. Estimated failure factors**

- Faulty contact in VNT actuator (REA) connector
- Harness disconnection
- Actuator internal disconnection
- Controller internal disconnection

## INSPECTION PROCEDURE: P0045

| 1 | Check the DTC detected [HINO DX II ] |
|---|---|

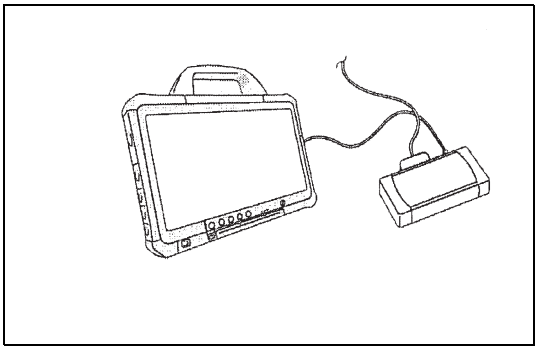

SAPH16F010300075

1. Connect the vehicle to HINO DX II .
2. Set the starter switch to the "ON" position.
3. Select [Engine] and check if any DTC other than P0045 (for example U010C) has been detected.

**HINT**
**Due to CAN communication failures, P0045 may have been detected.**

**Has DTC U010C been detected?**

**YES**

**Go to diagnosis procedure of a related DTC.**
**Go to step 2 after repair.**

**NO**

**Go to step 3.**

| 2 | Check the DTC detected [HINO DX II ] |
|---|---|

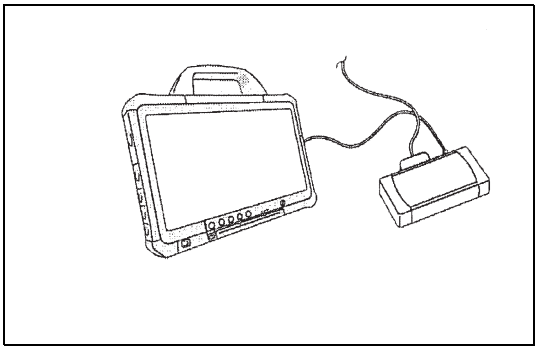

SAPH16F010300076

1. Set the starter switch to the "ON" position.
2. Select [Engine] and check if P0045 has been detected.

**Has DTC P0045 been detected?**

**YES**

**Go to step 3.**

**NO**

**Procedure completed.**
**Perform "After-inspection work" of INFORMATION section.**

| 3 | Check the connector connection [HINO DX ll ] |
|---|---|

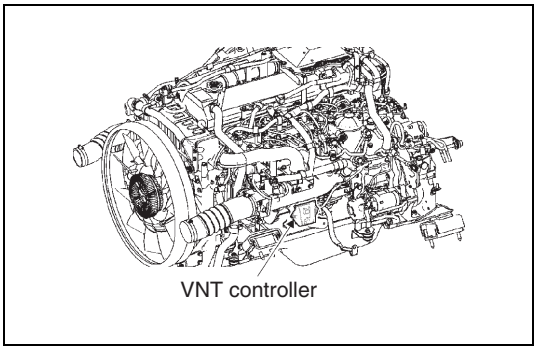


SAPH16F010300077

1. Set the starter switch to the "LOCK" position.
2. Disconnect the VNT actuator and VNT controller connector and connect properly again.
3. Set the starter switch to the "ON" position.
4. Select [Engine] and check if P0045 has been detected.

**Has DTC P0045 been detected?**

**YES**

**Go to step 4.**

**NO**

**Procedure completed.**
**(Connector connection is faulty.)**
**Perform "After-inspection work" of INFORMATION section.**

| 4 | Inspect the VNT actuator unit |
|---|---|

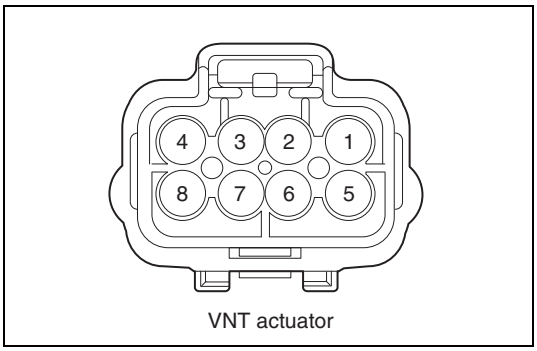


VNT actuator

SAPH16F010300078

1. Set the starter switch to the "LOCK" position.
2. Disconnect the VNT actuator connector.
3. Measure the resistance between the terminals of the VNT actuator connector using the electrical tester.

| Tester connections | Standard values |
|---|---|
| **VNT actuator**<br>**#6 – #7**<br>**#6 – #8**<br>**#7 – #8** | **1.8 – 2.4 Ω** |

**Do the measurements meet the standard value?**

**YES**

**Go to step 5.**

**NO**

**Replace the turbocharger.**
**Perform "After-inspection work" of INFORMATION section.**

| 5 | Inspect the VNT controller harness |
|---|---|

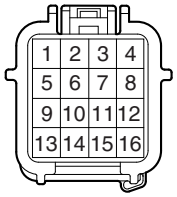


VNT controller

SAPH16F010300079

1. Connect the VNT actuator connector.
2. Disconnect the VNT controller connector.
3. Measure the resistance between the terminals of the VNT controller vehicle-side connector using the electrical tester.

| Tester connections | Standard values |
|---|---|
| **VNT controller vehicle-side connector**<br>**#10 – #11**<br>**#11 – #12**<br>**#10 – #12** | **1.8 – 2.4 Ω** |

**Do the measurements meet the standard value?**

**YES**

**Go to step 6.**

**NO**

**Repair or replace the harness.**
**Perform "After-inspection work" of INFORMATION section.**

| 6 | Check the operation of the VNT controller [HINO DX II ] |
|---|---|

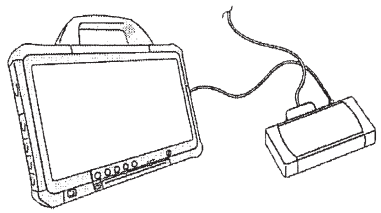

SAPH16F010300080

1. Set the starter switch to the "ON" position.
2. Erase the trouble history using HINO DX II .
3. Set the starter switch to the "LOCK" position.
4. Set the starter switch to the "ON" position again.
5. Select [Engine] and check if P0045 has been detected.

**HINT**
**Turning the starter switch OFF and ON verifies the wiping operation of the VNT actuator (DC motor).**

| Measurement conditions |
|---|
| **Starter switch: LOCK → ON** |

**Has DTC P0045 been detected?**

**YES**

**Replace the VNT controller.**
**Perform "After-inspection work" of INFORMATION section.**

**NO**

**Procedure completed.**
**Perform "After-inspection work" of INFORMATION section.**

# DTC: P0047

EN01H16F01030F03001022

## P0047: DC motor terminal short circuit, DC motor short circuit (Short to Battery) (VNT actuator motor short to BATT)

INFORMATION

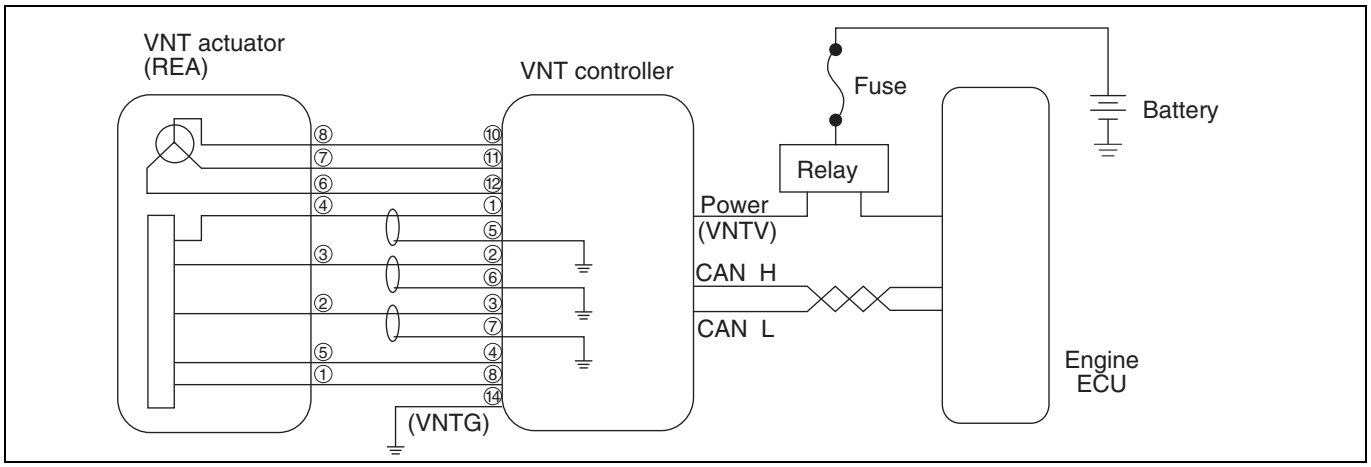


SAPH16F010300081

**1. Technical description**

- The VNT moves the nozzle vane steplessly by the REA (Rotary Electric Actuator) to control the turbo speed and boost pressure.
- The REA has a sensor to detect the movement of the actuator, always monitoring the reading and actual value of the nozzle vane opening.
- Wiping operation is performed while the engine is stopped for the purpose of removing soot and oil coming out from the range of vane operation and checking the turbo mechanical operating range for abnormality.

**<Description of malfunction>**

- –

**2. DTC set condition**

(1) DTC detection condition

- While the engine is in operation: Always
- While the engine is stopped: During wiping operation

(2) Judgment criteria

| Item | Details (Reference) |
|---|---|
| 1. Motor short-circuit | When LO-side current of at least 20.7 A is detected 3 times. |

**3. Reset condition**

- After normal operation is restored and the starter switch is on the "LOCK" position.

**4. Indication, warning or system control regulation when the DTC is set.**

- MIL: ON
- SVS light: OFF
- Engine output is restricted.
- Cruise control function is not available.
- Auxiliary brake function is not available.

**5. Symptoms on the vehicle when the DTC is set**

**<Symptoms on the vehicle due to backup control (fail safe function)>**

- Engine output is insufficient.
- Cruise control does not work.
- Auxiliary brake does not work.

**<Symptoms on the vehicle due to malfunction>**

- –

**6. Pre-inspection work**

- Check that the battery voltage is in the normal range.

**7. After-inspection work**

- Clear all past DTCs.
- Check that no DTC is detected after test drive.

**8. Estimated failure factors**

- Short-circuit in VNT actuator motor coil.
- VNT controller internal short.
- Harness short-circuit.

## INSPECTION PROCEDURE: P0047

| 1 | Check the DTC detected (Engine ECU) [HINO DX II ] |
|---|---|

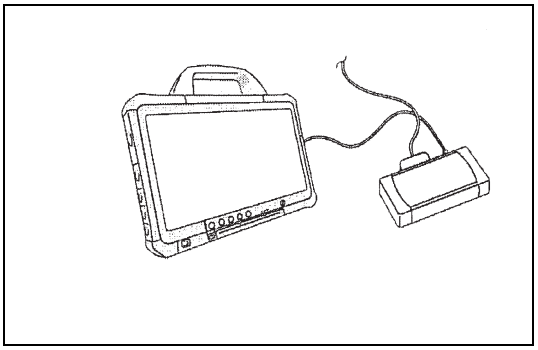

SAPH16F010300082

1. Connect the vehicle to HINO DX II .
2. Set the starter switch to the "ON" position.
3. Select [Engine] and check if any DTC other than P0047 (for example U010C) has been detected.

**HINT**
**Due to CAN communication failure P0047 may have been detected.**

**Has DTC U010C been detected?**

**YES**

**Go to diagnosis procedure of a related DTC.**
**Go to step 2 after repair.**

**NO**

**Go to step 3.**

| 2 | Check the DTC detected (Engine ECU) [HINO DX II ] |
|---|---|

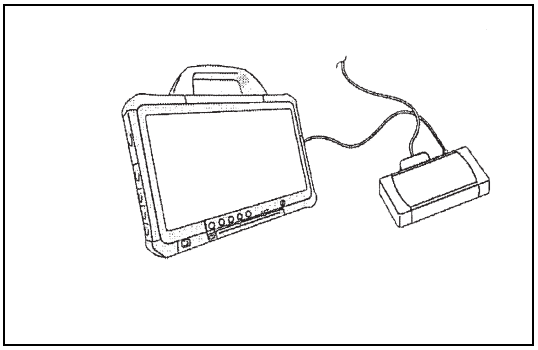

SAPH16F010300083

1. Set the starter switch to the "ON" position.
2. Select [Engine] and check if P0047 has been detected.

**Has DTC P0047 been detected?**

**YES**

**Go to step 3.**

**NO**

**Procedure completed.**
**Perform "After-inspection work" of INFORMATION section.**

| 3 | Check the connector connection [HINO DX ll ] |
|---|---|

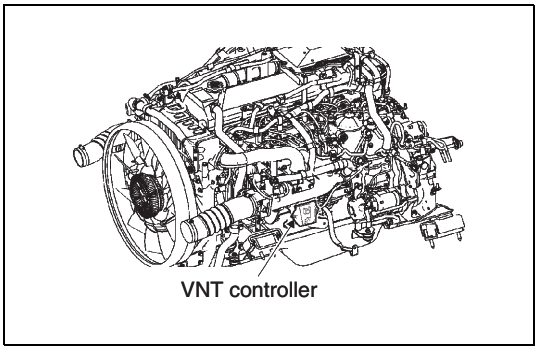


SAPH16F010300084

1. Set the starter switch to the "LOCK" position.
2. Disconnect the VNT actuator and VNT controller connector and connect properly again.
3. Set the starter switch to the "ON" position.
4. Select [Engine] and check if P0047 has been detected.

**Has DTC P0047 been detected?**

**YES**

**Go to step 4.**

**NO**

**Procedure completed.**
**(Connector connection is faulty.)**
**Perform "After-inspection work" of INFORMATION section.**

| 4 | Inspect the VNT actuator unit |
|---|---|

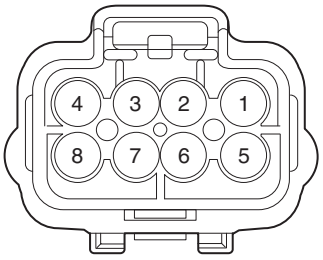


VNT actuator

SAPH16F010300085

1. Set the starter switch to the "LOCK" position.
2. Disconnect the VNT actuator connector.
3. Measure the resistance between the terminals of the VNT actuator connector using the electrical tester.

| Tester connections | Standard values |
|---|---|
| **VNT actuator**<br>**#6 – #7**<br>**#6 – #8**<br>**#7 – #8** | **1.8 – 2.4 Ω** |

**Do the measurements meet the standard value?**

**YES**

**Go to step 5.**

**NO**

**Replace the turbocharger.**
**Perform "After-inspection work" of INFORMATION section.**

| 5 | Inspect the VNT controller harness |
|---|---|

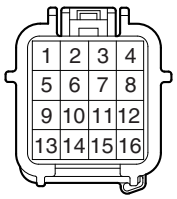


VNT controller

SAPH16F010300086

1. Connect the VNT actuator connector.
2. Disconnect the VNT controller connector.
3. Measure the resistance between the terminals of the VNT controller vehicle-side connector using the electrical tester.

| Tester connections | Standard values |
|---|---|
| **VNT controller vehicle-side connector<br>#10 – #11<br>#11 – #12<br>#10 – #12** | **1.8 – 2.4 Ω** |

**Do the measurements meet the standard value?**

**YES**

**Go to step 6.**

**NO**

**Repair or replace the harness.**
**Perform "After-inspection work" of INFORMATION section.**

| 6 | Check the operation of the VNT controller [HINO DX II ] |
|---|---|

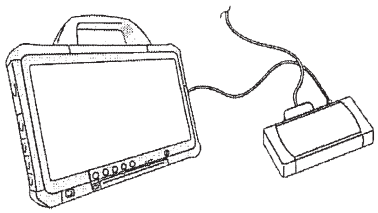

SAPH16F010300087

1. Set the starter switch to the "ON" position.
2. Erase the trouble history using HINO DX II .
3. Set the starter switch to the "LOCK" position.
4. Set the starter switch to the "ON" position again.
5. Select [Engine] and check if P0047 has been detected.

**HINT**
**Turning the starter switch OFF and ON verifies the wiping operation of the VNT actuator (DC motor).**

| Measurement conditions |
|---|
| **Starter switch: LOCK → ON** |

**Has DTC P0047 been detected?**

**YES**

**Replace the VNT controller.**
**Perform "After-inspection work" of INFORMATION section.**

**NO**

**Procedure completed.**
**Perform "After-inspection work" of INFORMATION section.**

# DTC: P0048

EN01H16F01030F03001023

## P0048: DC motor terminal short circuit, DC motor short circuit (Short to GND) (VNT actuator motor short to GND)

INFORMATION

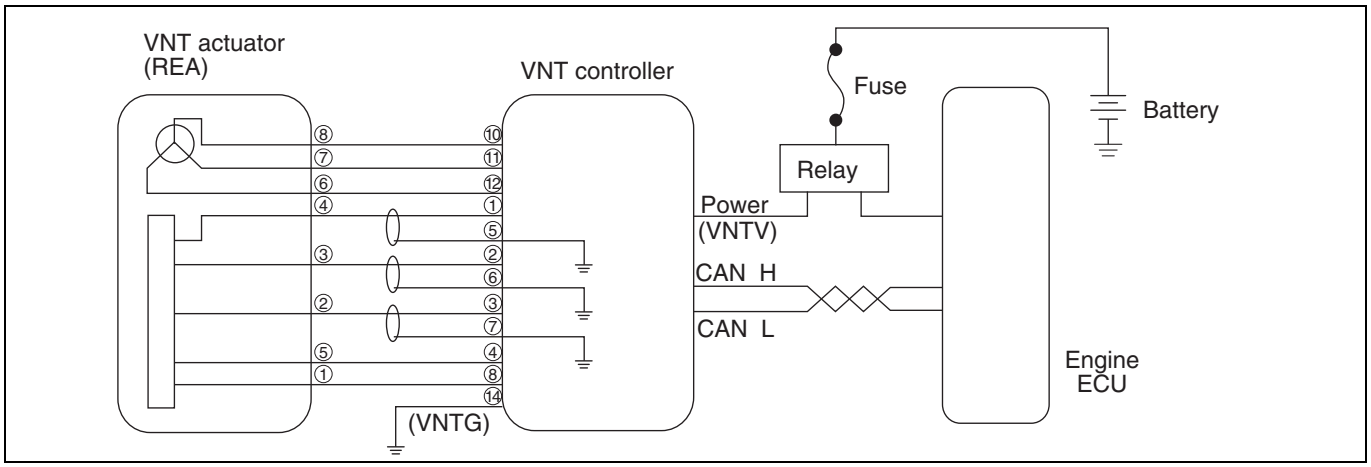


SAPH16F010300088

**1. Technical description**

- The VNT moves the nozzle vane steplessly by the REA (Rotary Electric Actuator) to control the turbo speed and boost pressure.
- The REA has a sensor to detect the movement of the actuator, always monitoring the reading and actual value of the nozzle vane opening.
- Wiping operation is performed while the engine is stopped for the purpose of removing soot and oil coming out from the range of vane operation and checking the turbo mechanical operating range for abnormality.

**<Description of malfunction>**

- –

**2. DTC set condition**

(1) DTC detection condition

- While the engine is in operation: Always
- While the engine is stopped: During wiping operation

(2) Judgment criteria

| Item | Details (Reference) |
|---|---|
| 1. Motor circuit short | When LO-side current of at least 20.7 A is detected 3 times. |

**3. Reset condition**

- After normal operation is restored and the starter switch is on the "LOCK" position.

**4. Indication, warning or system control regulation when the DTC is set.**

- MIL: ON
- SVS light: OFF
- Engine output is restricted.
- Cruise control function is not available.
- Auxiliary brake function is not available.

**5. Symptoms on the vehicle when the DTC is set**

**<Symptoms on the vehicle due to backup control (fail safe function)>**

- Engine output is insufficient.
- Cruise control does not work.
- Auxiliary brake does not work.

**<Symptoms on the vehicle due to malfunction>**

- –

**6. Pre-inspection work**

- Check that the battery voltage is in the normal range.

**7. After-inspection work**

- Clear all past DTCs.
- Check that no DTC is detected after test drive.

**8. Estimated failure factors**

- Harness disconnection.
- VNT actuator motor coil disconnection.
- VNT controller internal disconnection.

## INSPECTION PROCEDURE: P0048

| 1 | Check the DTC detected (Engine ECU) [HINO DX II ] |
|---|---|

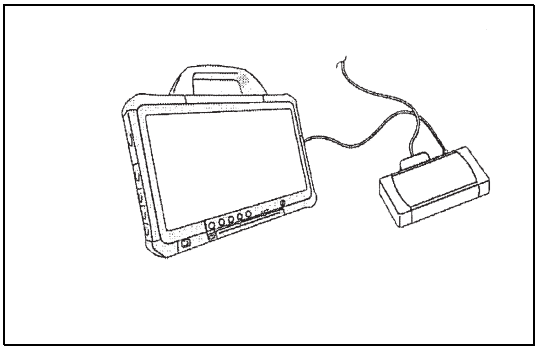

SAPH16F010300089

1. Connect the vehicle to HINO DX II .
2. Set the starter switch to the "ON" position.
3. Select [Engine] and check if any DTC other than P0048 (for example U010C) has been detected.

**HINT**
**Due to CAN communication failure P0048 may have been detected.**

**Has DTC U010C been detected?**

**YES**

**Go to diagnosis procedure of a related DTC.**
**Go to step 2 after repair.**

**NO**

**Go to step 3.**

| 2 | Check the DTC detected (Engine ECU) [HINO DX II ] |
|---|---|

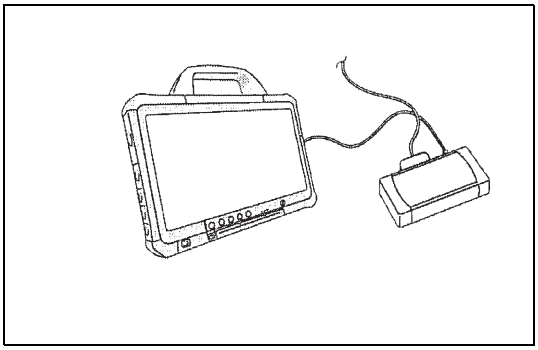

SAPH16F010300090

1. Set the starter switch to the "ON" position.
2. Select [Engine] and check if P0048 has been detected.

**Has DTC P0048 been detected?**

**YES**

**Go to step 3.**

**NO**

**Procedure completed.**
**Perform "After-inspection work" of INFORMATION section.**

| 3 | Check the connector connection [HINO DX ll ] |
|---|---|

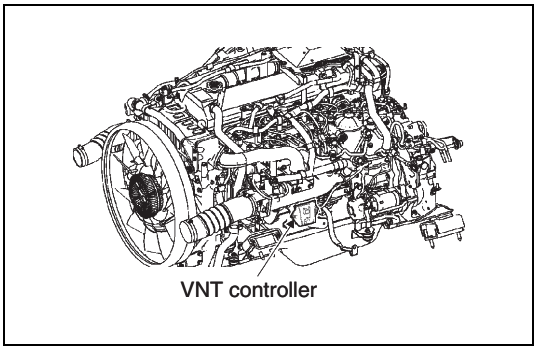


SAPH16F010300091

1. Set the starter switch to the "LOCK" position.
2. Disconnect the VNT actuator and VNT controller connector and connect properly again.
3. Set the starter switch to the "ON" position.
4. Select [Engine] and check if P0048 has been detected.

**Has DTC P0048 been detected?**

**YES**

**Go to step 4.**

**NO**

**Procedure completed.**
**(Connector connection is faulty.)**
**Perform "After-inspection work" of INFORMATION section.**

| 4 | Inspect the VNT actuator unit |
|---|---|

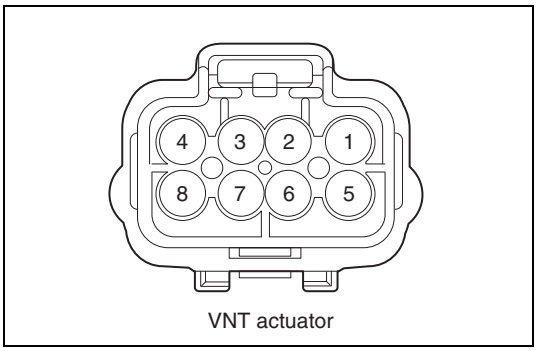


SAPH16F010300092

1. Set the starter switch to the "LOCK" position.
2. Disconnect the VNT actuator connector.
3. Measure the resistance between the terminals of the VNT actuator connector using the electrical tester.

| Tester connections | Standard values |
|---|---|
| **VNT actuator**<br>**#6 – #7**<br>**#6 – #8**<br>**#7 – #8** | **1.8 – 2.4 Ω** |

**Do the measurements meet the standard value?**

**YES**

**Go to step 5.**

**NO**

**Replace the turbocharger.**
**Perform "After-inspection work" of INFORMATION section.**

| 5 | Inspect the VNT controller harness |
|---|---|

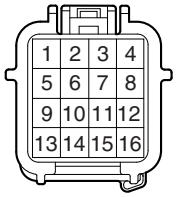


VNT controller

SAPH16F010300093

1. Connect the VNT actuator connector.
2. Disconnect the VNT controller connector.
3. Measure the resistance between the terminals of the VNT controller vehicle-side connector using the electrical tester.

| Tester connections | Standard values |
|---|---|
| **VNT controller vehicle-side connector**<br>**#10 – #11**<br>**#11 – #12**<br>**#10 – #12** | **1.8 – 2.4 Ω** |

**Do the measurements meet the standard value?**

**YES**

**Go to step 6.**

**NO**

**Repair or replace the harness.**
**Perform "After-inspection work" of INFORMATION section.**

| 6 | Check the operation of the VNT controller [HINO DX II ] |
|---|---|

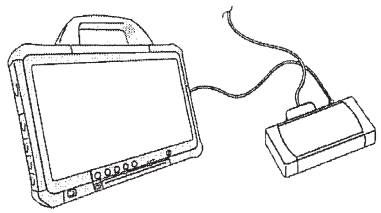

SAPH16F010300094

1. Set the starter switch to the "ON" position.
2. Erase the trouble history using HINO DX II .
3. Set the starter switch to the "LOCK" position.
4. Set the starter switch to the "ON" position again.
5. Select [Engine] and check if P0048 has been detected.

**HINT**
**Turn the starter switch OFF and ON verifies the wiping operation of the VNT actuator (DC motor).**

| Measurement conditions |
|---|
| **Starter switch: LOCK → ON** |

**Has DTC P0048 been detected?**

**YES**

**Replace the VNT controller.**
**Perform "After-inspection work" of INFORMATION section.**

**NO**

**Procedure completed.**
**Perform "After-inspection work" of INFORMATION section.**

# DTC: P006E

EN01H16F01030F03001024

## P006E: Power supply failure (Out of range low) (VNT actuator power supply too low)

INFORMATION

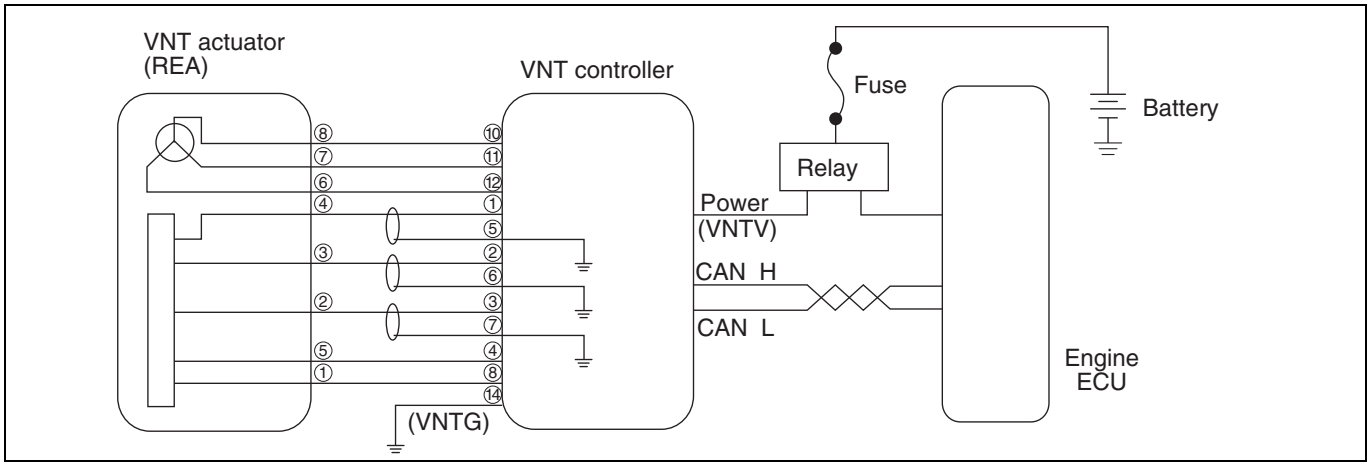


SAPH16F010300095

**1. Technical description**

- The VNT moves the nozzle vane steplessly by the REA (Rotary Electric Actuator) to control the turbo speed and boost pressure.
- The REA has a sensor to detect the movement of the actuator, always monitoring the reading and actual value of the nozzle vane opening.
- Wiping operation is performed while the engine is stopped for the purpose of removing soot and oil coming out from the range of vane operation and checking the turbo mechanical operating range for abnormality.

**<Description of malfunction>**

- –

**2. DTC set condition**

(1) DTC detection condition

- While the engine is in operation: Always
- While the engine is stopped: During wiping operation

(2) Judgment criteria

| Item | Details (Reference) |
|---|---|
| Power supply voltage failure (Low) | Power supply voltage is 8 V or less for at least 5 seconds. |

**3. Reset condition**

- After normal operation is restored and the starter switch is turned OFF.

**4. Indication, warning or system control regulation when the DTC is set.**

- MIL: ON
- SVS light: OFF
- Engine output is restricted.
- Cruise control function is not available.
- Auxiliary brake function is not available.

**5. Symptoms on the vehicle when the DTC is set**

**<Symptoms on the vehicle due to backup control (fail safe function)>**

- Engine output is insufficient.
- Cruise control does not work.
- Auxiliary brake does not work.

**<Symptoms on the vehicle due to malfunction>**

- –

**6. Pre-inspection work**

- Check that the battery voltage is in the normal range.

**7. After-inspection work**

- Clear all past DTCs.
- Check that no DTC is detected after test drive.

**8. Estimated failure factors**

- Failure in alternator, regulator, or other part of the power supply system
- Battery is depleted.

## INSPECTION PROCEDURE: P006E

| 1 | Check the DTC detected 1 (Engine ECU) [HINO DX II ] |
|---|---|

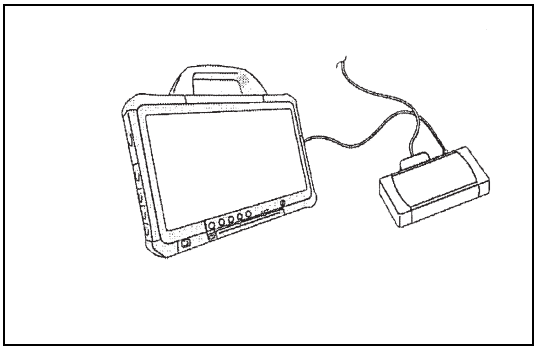

SAPH16F010300096

1. Connect the vehicle to HINO DX II .
2. Set the starter switch to the "ON" position.
3. Select [Engine] and check if any DTC other than P006E (U010C) has been detected.

**HINT**
**Due to CAN communication failure P006E may have been detected.**

**Has DTC U010C been detected?**

**YES**

**Go to diagnosis procedure of the related DTC.**
**After repair, go to step 2.**

**NO**

**Go to step 3.**

| 2 | Check the DTC detected 2 (Engine ECU) [HINO DX II ] |
|---|---|

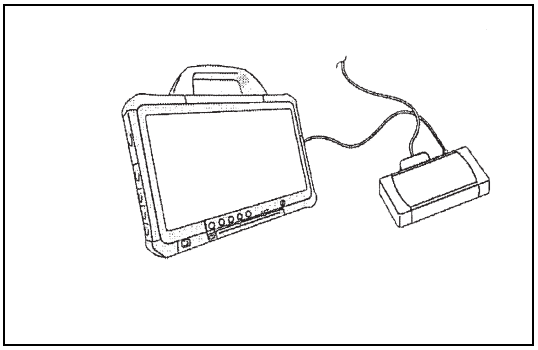

SAPH16F010300097

1. Set the starter switch to the "ON" position.
2. Select [Engine] and check if P006E has been detected.

**Has DTC P006E been detected?**

**YES**

**Go to step 3.**

**NO**

**Procedure completed.**
**Perform "After-inspection work" of INFORMATION section.**

| 3 | Check the VNT controller power supply circuit |
|---|---|

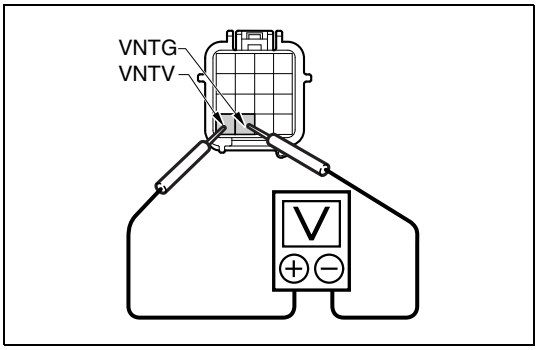


SAPH16F010300098

1. Set the starter switch to the "LOCK" position.
2. Disconnect the VNT controller connector.
3. Set the starter switch to the "ON" position.
4. Use the electrical tester to measure the voltage between the terminals of the VNT controller vehicle-side connector.

| Measurement conditions | Tester connections | Standard values |
|---|---|---|
| Starter switch: ON | VNT controller vehicle-side connector<br>VNTV – VNTG | 8 V or more |

**Do the measurements meet the standard value?**

**YES**

**Procedure completed.**
**Perform "After-inspection work" of INFORMATION section.**

**NO**

**Check the VNT controller power supply circuit.**
**Perform "After-inspection work" of INFORMATION section.**

# DTC: P006F

EN01H16F01030F03001025

## P006F: Power supply failure (Out of range high) (VNT actuator power supply too high)

INFORMATION

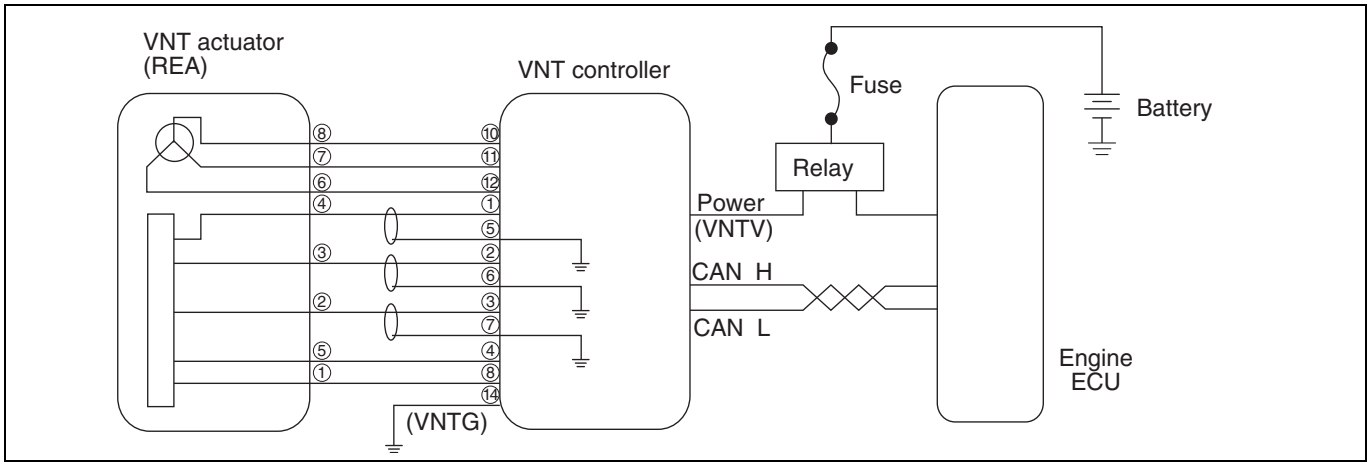


SAPH16F010300099

**1. Technical description**

- The VNT moves the nozzle vane steplessly by the REA (Rotary Electric Actuator) to control the turbo speed and boost pressure.
- The REA has a sensor to detect the movement of the actuator, always monitoring the reading and actual value of the nozzle vane opening.
- Wiping operation is performed while the engine is stopped for the purpose of removing soot and oil coming out from the range of vane operation and checking the turbo mechanical operating range for abnormality.

**<Description of malfunction>**

- –

**2. DTC set condition**

(1) DTC detection condition

- While the engine is in operation: Always
- While the engine is stopped: During wiping operation

(2) Judgment criteria

| Item | Details (Reference) |
|---|---|
| Power supply voltage failure (High) | Power supply voltage is 18 V or higher for at least 5 seconds. |

**3. Reset condition**

- After normal operation is restored and the starter switch is turned OFF.

**4. Indication, warning or system control regulation when the DTC is set.**

- MIL: ON
- SVS light: OFF
- Engine output is restricted.
- Cruise control function is not available.
- Auxiliary brake function is not available.

**5. Symptoms on the vehicle when the DTC is set**

**<Symptoms on the vehicle due to backup control (fail safe function)>**

- Engine output is insufficient.
- Cruise control does not work.
- Auxiliary brake does not work.

**<Symptoms on the vehicle due to malfunction>**

- –

**6. Pre-inspection work**

- Check that the battery voltage is in the normal range.

**7. After-inspection work**

- Clear all past DTCs.
- Check that no DTC is detected after test drive.

**8. Estimated failure factors**

- Failure in alternator, regulator, or other part of the power supply system

## INSPECTION PROCEDURE: P006F

| 1 | Check the DTC detected 1 (Engine ECU) [HINO DX II ] |
|---|---|

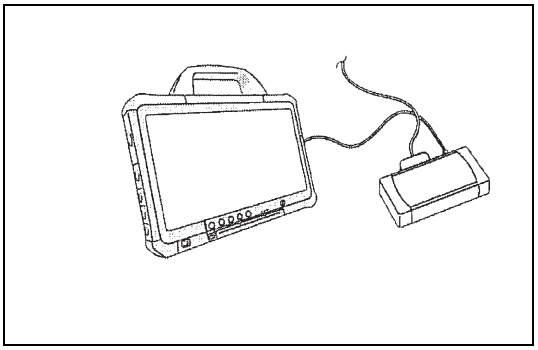

SAPH16F010300100

1. Connect the vehicle to HINO DX II .
2. Set the starter switch to the "ON" position.
3. Select [Engine] and check if any DTC other than P006F (U010C) has been detected.

**HINT**
**Due to CAN communication failure P006F may have been detected.**

**Has DTC U010C been detected?**

**YES**

**Go to diagnosis procedure of the related DTC.**
**After repair, go to step 2.**

**NO**

**Go to step 3.**

| 2 | Check the DTC detected 2 (Engine ECU) [HINO DX II ] |
|---|---|

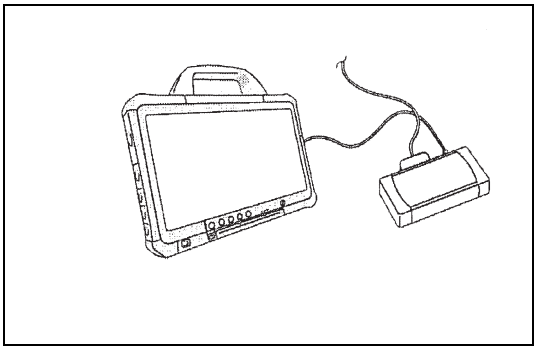

SAPH16F010300101

1. Set the starter switch to the "ON" position.
2. Select [Engine] and check if P006F has been detected.

**Has DTC P006F been detected?**

**YES**

**Go to step 3.**

**NO**

**Procedure completed.**
**Perform "After-inspection work" of INFORMATION section.**

| 3 | Check the VNT controller power supply circuit |
|---|---|

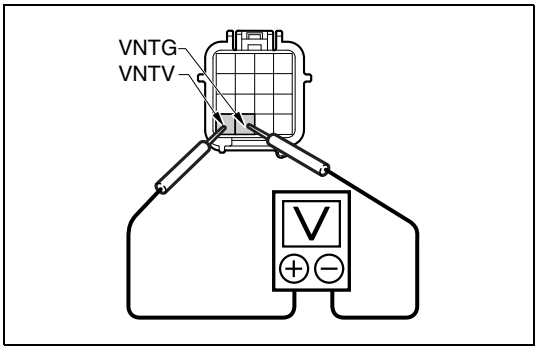


SAPH16F010300102

1. Set the starter switch to the "LOCK" position.
2. Disconnect the VNT controller connector.
3. Set the starter switch to the "ON" position.
4. Use the electrical tester to measure the voltage between the terminals of the VNT controller vehicle-side connector.

| Measurement conditions | Tester connections | Standard values |
|---|---|---|
| **Starter switch: ON** | **VNT controller vehicle-side connector<br>VNTV – VNTG** | **8 V or more** |

**Do the measurements meet the standard value?**

**YES**

**Procedure completed.**
**Perform "After-inspection work" of INFORMATION section.**

**NO**

**Check the VNT controller power supply circuit.**
**Perform "After-inspection work" of INFORMATION section.**

# DTC: P007B

EN01H16F01030F03001026

## P007B: Intake air temperature sensor (intercooler outlet) - rationality

INFORMATION [at Engine Startup]

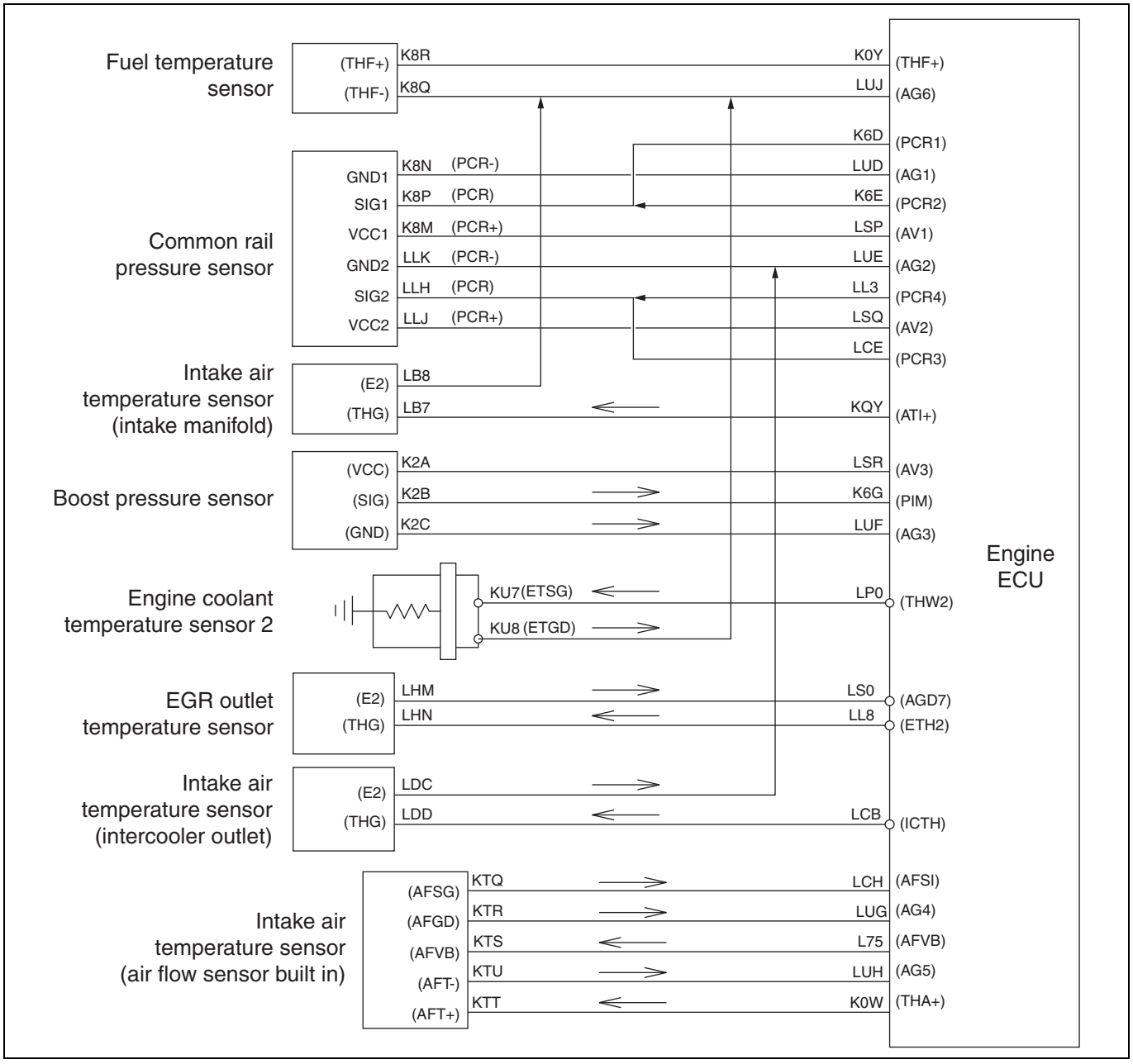


SAPH16F010300103

**1. Technical description**

- The intake air temperature sensor (intercooler outlet), which is installed downstream of the boost pressure sensor, constantly measures the intake temperature at the intercooler outlet.

**<Description of malfunction>**

- The intake temperature at the intercooler outlet cannot be correctly recognized.

**2. DTC set condition**

(1) DTC detection condition

- Engine speed is between 500 r/min and 1,000 r/min.
- Fuel injection quantity variation is 35 $mm^3$/st. cyl or less.
- Engine coolant temperature is between -30 °C {-22 °F} and 55 °C {131 °F}.
- Battery voltage is in the range of 10 V to 16 V.
- EGR valve is fully closed.

The above conditions continue for 20 seconds or longer.

(2) Judgment criteria

- Difference between intake air temperature sensor (with built-in air flow sensor) and intake air temperature sensor (intercooler outlet) is at least 30 °C {86 °F}, and difference between intake air temperature sensor (intercooler outlet) and intake air temperature sensor (intake manifold) is at least 30 °C {86 °F}.

**3. Reset condition**

- After restoration to normal condition.

**4. Indication, warning or system control regulation when the DTC is set.**

- MIL: ON
- SVS light: OFF

**5. Symptoms on the vehicle when the DTC is set**

**<Symptoms on the vehicle due to backup control (fail safe function)>**

- –

**<Symptoms on the vehicle due to malfunction>**

- –

**6. Pre-inspection work**

- Check that the battery voltage is in the normal range.

**7. After-inspection work**

- Clear all past DTCs.
- Check that no DTC is detected after test drive.

**8. Estimated failure factors**

- Intake air temperature sensor (intercooler outlet) malfunction
- Failure of intake air temperature sensor (with built-in air flow sensor)
- Intake air temperature sensor (intake manifold) malfunction
  - Sensor is disconnected from measuring site or sensing unit is malfunctioning (due to dirt, clogging, damage, etc.)
  - Faulty resistance (due to sticking)
- ECU sensor power supply failure

## P007B: Intake air temperature sensor (intercooler outlet) - rationality

INFORMATION [while Driving (1)]

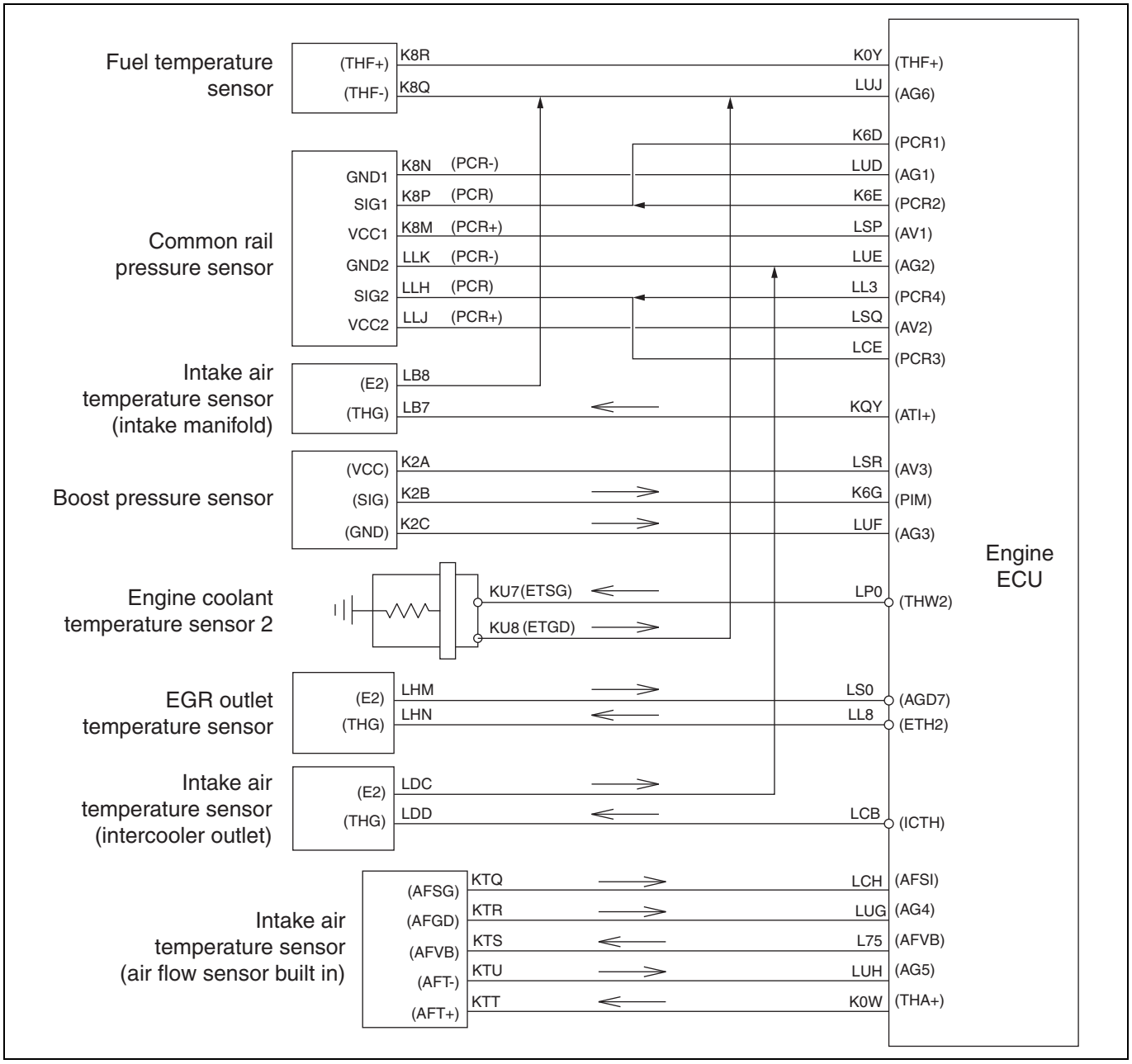


SAPH16F010300104

**1. Technical description**

- The intake air temperature sensor (intercooler outlet), which is installed downstream of the boost pressure sensor, constantly measures the intake temperature at the intercooler outlet.

**<Description of malfunction>**

- The intake temperature at the intercooler outlet cannot be correctly recognized.

**2. DTC set condition**

(1) DTC detection condition

- Engine speed is at least 1,500 r/min.
- Fuel injection quantity is at least 40 $mm^3$/st. cyl.
- Battery voltage is in the range of 10 V to 16 V.
- Engine speed fluctuation is less than 156 r/min/sec.
- Fuel injection quantity fluctuation is less than 78 $mm^3$/st. cyl.
- Atmospheric pressure is at least 75 kPa {10.8 psi}.
- Vehicle speed is at least 21 km/h {13 mph}.
- Air intake quantity is at least 75 g/sec.
- Intake air temperature sensor (with built-in air flow sensor) is at least -10 °C {14 °F}.
- Exhaust brake is not active.

The above conditions continue for at least 40 seconds.

(2) Judgment criteria

- The calculated intercooler efficiency, which is derived from the intake temperature sensor, boost pressure sensor, intake air temperature sensor (intercooler outlet), and atmospheric pressure sensor, is greater than 125 %.

**3. Reset condition**

- After restoration to normal condition.

**4. Indication, warning or system control regulation when the DTC is set.**

- MIL: ON
- SVS light: OFF

**5. Symptoms on the vehicle when the DTC is set**

**<Symptoms on the vehicle due to backup control (fail safe function)>**

- –

**<Symptoms on the vehicle due to malfunction>**

- –

**6. Pre-inspection work**

- Check that the battery voltage is in the normal range.

**7. After-inspection work**

- Clear all past DTCs.
- Check that no DTC is detected after test drive.

**8. Estimated failure factors**

- Intake air temperature sensor (intercooler outlet) malfunction
- Failure of intake air temperature sensor (with built-in air flow sensor)
- Boost pressure sensor
  - Sensor is disconnected from measuring site or sensing unit is malfunctioning (due to dirt, clogging, damage, etc.)
  - Faulty resistance (due to sticking)
- ECU sensor power supply failure

## P007B: Intake air temperature sensor (intercooler outlet) - rationality

INFORMATION [while Driving (2)]

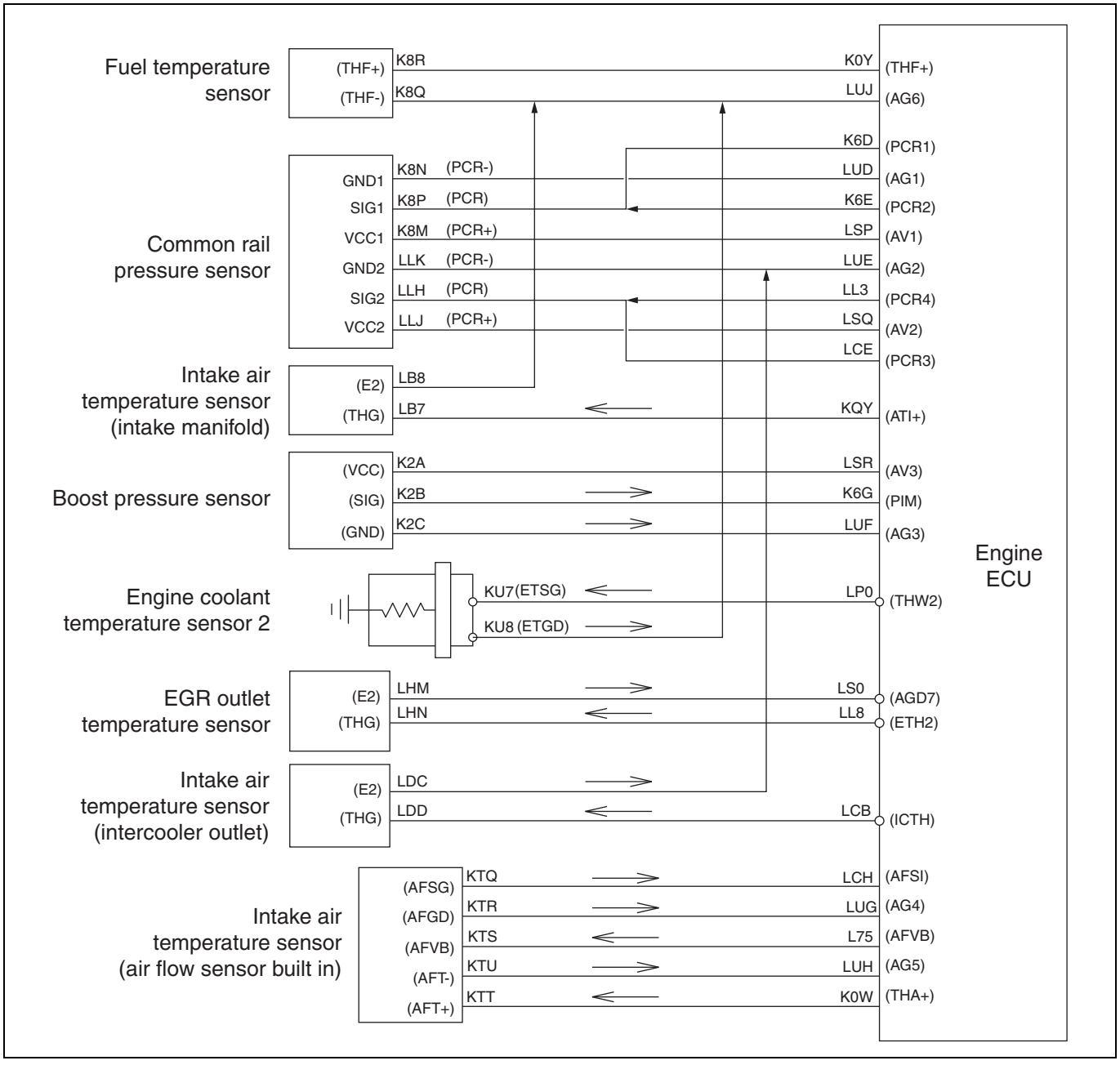


SAPH16F010300105

**1. Technical description**

- The intake air temperature sensor (intercooler outlet), which is installed downstream of the boost pressure sensor, constantly measures the intake temperature at the intercooler outlet.

**<Description of malfunction>**

- The intake temperature at the intercooler outlet cannot be correctly recognized.

**2. DTC set condition**

(1) DTC detection condition

- Engine speed is at least 1,500 r/min.
- Fuel injection quantity is at least 40 $mm^3$/st. cyl.
- Battery voltage is in the range of 10 V to 16 V.
- Engine speed fluctuation is less than 156 r/min/sec.
- Fuel injection quantity fluctuation is less than 78 $mm^3$/st. cyl. sec.
- Atmospheric pressure is at least 75 kPa {10.8 psi}.
- Vehicle speed is at least 21 km/h {13 mph}.
- Air intake air quantity is at least 75 g/sec.
- Intake air temperature sensor (with built-in air flow sensor) is at least -10 °C {14 °F}.

The above conditions continue for at least 40 seconds.

(2) Judgment criteria

- The calculated intercooler efficiency, which is derived from the intake temperature sensor, boost pressure sensor, intake air temperature sensor (intercooler outlet), and atmospheric pressure sensor, is below 45 – 65 % (for vehicle speeds 21 and 40 km/h {13 and 25 mph}).
- Difference among the estimated EGR quantity calculated from the engine speed and fuel injection rate, the estimated intake manifold temperature calculated from the EGR gas outlet temperature sensor and intake air temperature sensor (intercooler outlet), and the reading of the intake temperature sensor is at least 36 °C {97 °F} (when 0 % ≤ EGR quantity < 40 %), at least 75 °C {167 °F} (when 40 % ≤ EGR quantity < 60 %) and at least 85 °C {185 °F} (when 60 % ≤ EGR quantity).

**3. Reset condition**

- After restoration to normal condition.

**4. Indication, warning or system control regulation when the DTC is set.**

- MIL: ON
- SVS light: OFF

**5. Symptoms on the vehicle when the DTC is set**

**<Symptoms on the vehicle due to backup control (fail safe function)>**

- –

**<Symptoms on the vehicle due to malfunction>**

- –

**6. Pre-inspection work**

- Check that the battery voltage is in the normal range.

**7. After-inspection work**

- Clear all past DTCs.
- Check that no DTC is detected after test drive.

**8. Estimated failure factors**

- Intake air temperature sensor (intercooler outlet) malfunction
- Failure of intake air temperature sensor (with built-in air flow sensor)
- Intake air temperature sensor (intake manifold) malfunction
- Boost pressure sensor
  - Sensor is disconnected from measuring site or sensing unit is malfunctioning (due to dirt, clogging, damage, etc.)
  - Faulty resistance (due to sticking)
- ECU sensor power supply failure

## INSPECTION PROCEDURE: P007B

| 1 | Check the DTC detected (Engine ECU) [HINO DX ll ] |
|---|---|

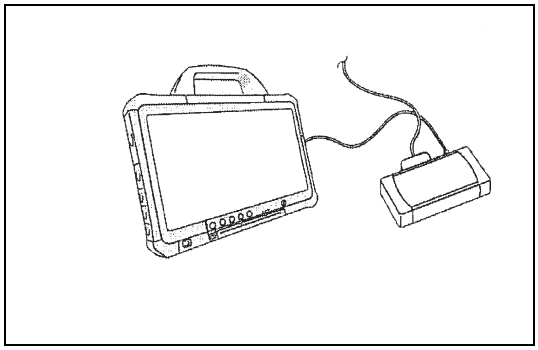

SAPH16F010300106

1. Set the starter switch to the "LOCK" position.
2. Connect the vehicle to HINO DX II .
3. Set the starter switch to the "ON" position.
4. Select [Engine] from the menu, and check if any DTC other than P007B (for example, P0401, P0402, P0404, P0234, P0299, P22D3, or turbocharger/EGR system DTC) has been detected.

**HINT**
**Intake air temperature sensor (intercooler outlet) characteristic abnormality judgment is performed based on the boost pressure and EGR quantity data.**
**If EGR system or Turbo DTC are detected, perform another failure diagnosis starting from the first DTC associated with the malfunction.**

**Has a DTC other than P007B been detected? (P0401, P0402, P0404, P0234, P0299, P22D3, or turbocharger/EGR system DTC)**

| YES | NO |
|---|---|
| Go to diagnosis procedure of a related DTC. | Go to step 2. |

| 2 | Inspect intake air temperature sensor (intercooler outlet) connector |
|---|---|

1. Check the connection of the intake air temperature sensor (intercooler outlet) connector (Looseness and poor contact).

**Was any failure found?**

| YES | NO |
|---|---|
| Connect securely, repair if needed.<br>Perform "After-inspection work" of INFORMATION section. | Go to step 3. |

| 3 | Inspect the intake air temperature sensor (intercooler outlet) |
|---|---|

1. Check the installation of the intake air temperature sensor (intercooler outlet).
2. Make sure there is no dirt or damage to the intake air temperature sensor (intercooler outlet).

**Was any failure found?**

**YES**

**Clean the intake air temperature sensor (intercooler outlet) and install it properly.**
**If damaged, replace the sensor.**
**Perform "After-inspection work" of INFORMATION section.**

**NO**

**Go to step 4.**

| 4 | Inspect the intake air temperature sensor (intercooler outlet) unit |
|---|---|

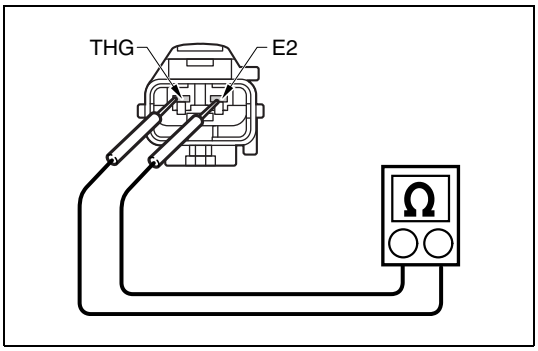

SAPH16F010300107

1. Set the starter switch to the "LOCK" position.
2. Disconnect the intake air temperature sensor (intercooler outlet) connector.
3. Measure the resistance between the terminals of the intake air temperature sensor (intercooler outlet) using the electrical tester.

| Measurement conditions | Tester connections | Standard values |
|---|---|---|
| Starter switch: LOCK | Intake air temperature sensor (intercooler outlet) THG – E2 | 20 °C {68 °F}: 7.336 – 5.794 kΩ<br>50 °C {122 °F}: 2.435 – 1.994 kΩ |

**Do the measurements meet the standard value?**

**YES**

**Go to step 5.**

**NO**

**Replace the intake air temperature sensor (intercooler outlet).**
**Perform "After-inspection work" of INFORMATION section.**

## 5 Inspect the intake air temperature sensor (intercooler outlet) power supply

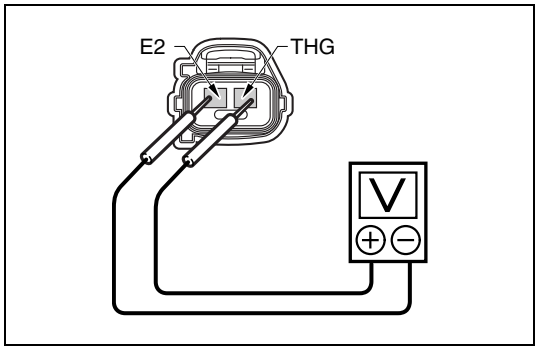


SAPH16F010300108

1. Set the starter switch to the "ON" position.
2. Use the electrical tester to measure the voltage between the terminals of the intake air temperature sensor (intercooler outlet) vehicle-side connector.

| Measurement conditions | Tester connections | Standard values |
|---|---|---|
| **Starter switch: ON** | **Intake air temperature sensor (intercooler outlet) vehicle-side connector THG – E2** | **4.5 – 5.5 V** |

**Do the measurements meet the standard value?**

**YES** → **Go to step 8.**

**NO** → **Go to step 6.**

## 6 Inspect for short-circuit in wire harness of intake air temperature sensor (intercooler outlet)

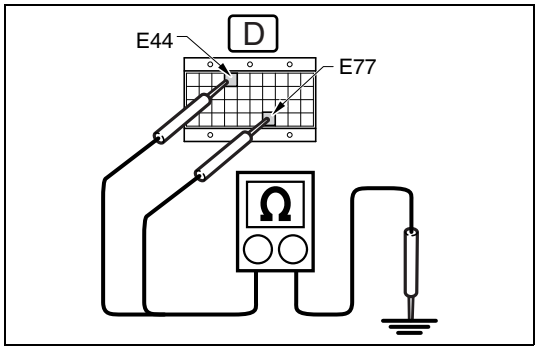


SAPH16F010300109

1. Set the starter switch to the "LOCK" position.
2. Connect the signal check harness to the engine ECU vehicle-side harness. (Do not connect harness to the ECU.)
3. Use the electrical tester to measure the resistance between each terminal in the engine ECU (signal check harness) and ground.

| Measurement conditions | Tester connections | Standard values |
|---|---|---|
| **Starter switch: LOCK** | **Engine ECU (signal check harness) ICTH(E44) – Ground AG3(E77) – Ground** | **∞ Ω** |

**Do the measurements meet the standard value?**

| YES | NO |
|---|---|
| **Go to step 7.** | **Repair or replace the harness.<br>Perform "After-inspection work" of INFORMATION section.** |

## 7 Inspect for disconnection in wire harness of intake air temperature sensor (intercooler outlet)

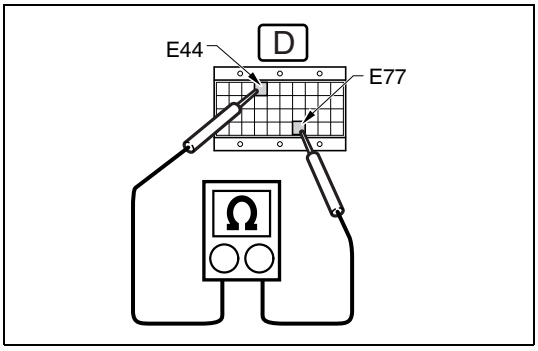

SAPH16F010300110

1. Connect the intake air temperature sensor (intercooler outlet) connector.
2. Measure the resistance between the terminals of engine ECU (signal check harness) using the electrical tester.

| Measurement conditions | Tester connections | Standard values |
|---|---|---|
| **Starter switch: LOCK** | **Engine ECU (signal check harness) ICTH(E44) – AG3(E77)** | **20 °C {68 °F}: 7.336 – 5.794 kΩ<br>50 °C {122 °F}: 2.435 – 1.994 kΩ** |

**Do the measurements meet the standard value?**

| YES | NO |
|---|---|
| **Replace the engine ECU.<br>Perform "After-inspection work" of INFORMATION section.** | **Repair or replace the harness.<br>Perform "After-inspection work" of INFORMATION section.** |

## 8 Inspect the intake air temperature sensor

1. Check the installation of the intake air temperature sensor (air flow sensor).
2. Make sure there is no dirt or damage to the intake air temperature sensor (air flow sensor).

**Was any failure found?**

| YES | NO |
|---|---|
| **Clean the intake air temperature sensor (air flow sensor) and install it properly.<br>If damaged, replace the sensor.<br>Perform "After-inspection work" of INFORMATION section.** | **Go to step 9.** |

| 9 | Inspect the intake air temperature sensor unit |
|---|---|

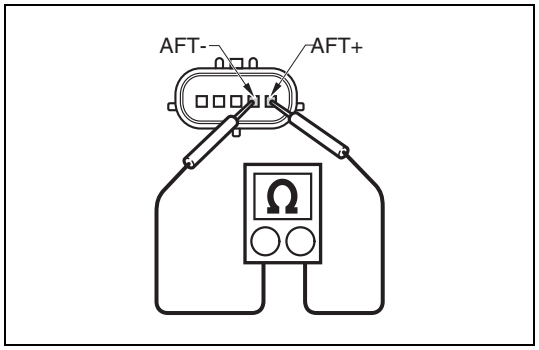


SAPH16F010300111

1. Set the starter switch to the "LOCK" position.
2. Disconnect the intake air temperature sensor (air flow sensor) connector.
3. Measure the resistance between the terminals of the intake air temperature sensor using the electrical tester.

| Measurement conditions | Tester connections | Standard values |
|---|---|---|
| Starter switch: LOCK | intake temperature sensor AFT- – AFT+ | 20 °C {68 °F}: 2.69 – 2.21 kΩ 60 °C {140 °F}: 0.667 – 0.493 kΩ |

**Do the measurements meet the standard value?**

**YES**

**Go to step 10.**

**NO**

**Replace the intake air temperature sensor. Perform "After-inspection work" of INFORMATION section.**

| 10 | Inspect the boost pressure sensor hose |
|---|---|

1. Make sure the boost pressure sensor hose is not clogged, ruptured, or cracked.
2. Make sure the pipe on the intake manifold side is not clogged.

**Was any failure found?**

**YES**

**1. Replace the boost pressure sensor hose.**
**2. Clean the intake manifold pipes**
**Perform "After-inspection work" of INFORMATION section.**

**NO**

**Go to step 11.**

## 11 Inspect the boost pressure sensor power supply system

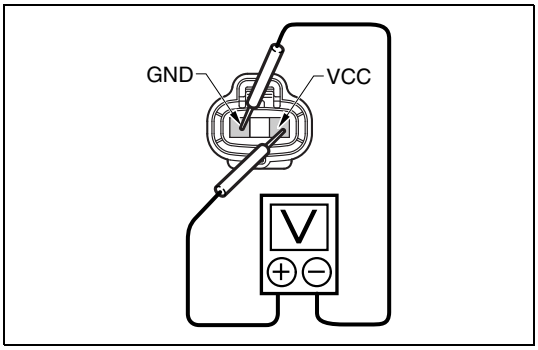


SAPH16F010300112

1. Set the starter switch to the "LOCK" position.
2. Disconnect the boost pressure sensor connector.
3. Set the starter switch to the "ON" position.
4. Measure the voltage between the terminals of the boost pressure sensor vehicle-side connector using the electrical tester.

| Measurement conditions | Tester connections | Standard values |
|---|---|---|
| **Starter switch: ON** | **Boost pressure sensor vehicle-side connector VCC – GND** | **4.75 – 5.25 V** |

**Do the measurements meet the standard value?**

**YES**

**Go to step 12.**

**NO**

**Inspect the wire harness and engine ECU sensor power supply output value.**
**Perform "After-inspection work" of INFORMATION section.**

## 12 Inspect the intake air temperature sensor (intake manifold)

1. Check the installation of the intake air temperature sensor (intake manifold).
2. Make sure there is no dirt or damage to the intake air temperature sensor (intake manifold).

**Was any failure found?**

**YES**

**Clean the intake air temperature sensor (intake manifold) and install it properly.**
**If damaged, replace the sensor.**
**Perform "After-inspection work" of INFORMATION section.**

**NO**

**Go to step 13.**

## 13 Inspect the intake air temperature sensor (intake manifold) unit

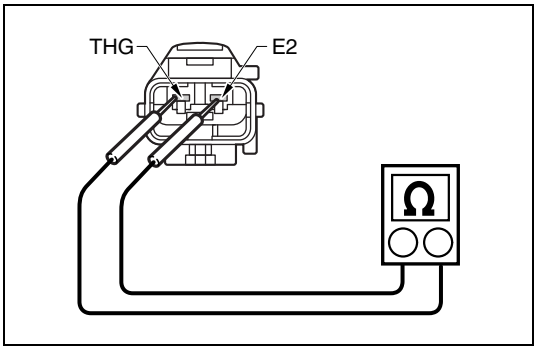

SAPH16F010300113

1. Set the starter switch to the "LOCK" position.
2. Disconnect the intake air temperature sensor (intake manifold) connector.
3. Measure the resistance between the terminals of the sensor using the electrical tester.

| Measurement conditions | Tester connections | Standard values |
|---|---|---|
| **Starter switch: LOCK** | **Intake air temperature sensor (intake manifold) THG – E2** | **20 °C {68 °F}: 7.336 – 5.794 kΩ 50 °C {122 °F}: 2.435 – 1.994 kΩ** |

**Do the measurements meet the standard value?**

**YES**

**Go to step 14.**

**NO**

**Replace the intake air temperature sensor (intake manifold).**
**Perform "After-inspection work" of INFORMATION section.**

## 14 Check the DTC detected (Engine ECU) [HINO DX II ]

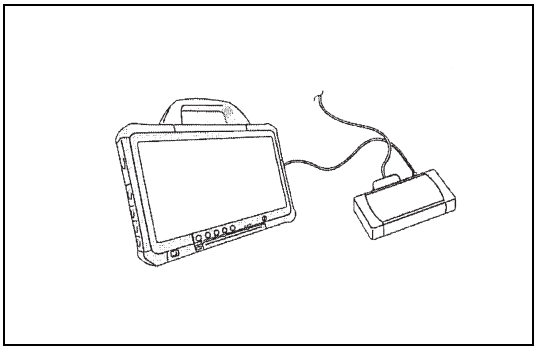
SAPH16F010300114

1. Perform an engine warm-up. (engine coolant temperature: 60 °C {140 °F} or more)
2. Stop the engine and set the starter switch to the "LOCK" position.
3. Connect the vehicle to HINO DX II .
4. Set the starter switch to the "ON" position.
5. Select [Engine] and check if P007B has been detected.

**Has DTC P007B been detected?**

**YES**

**Replace the engine ECU.**
**Perform "After-inspection work" of INFORMATION section.**

**NO**

**Procedure completed.**
**Perform "After-inspection work" of INFORMATION section.**

# DTC: P007C and P007D

EN01H16F01030F03001027

## P007C: Intake air temperature sensor (intercooler outlet) - out of range (Out of range low)

INFORMATION

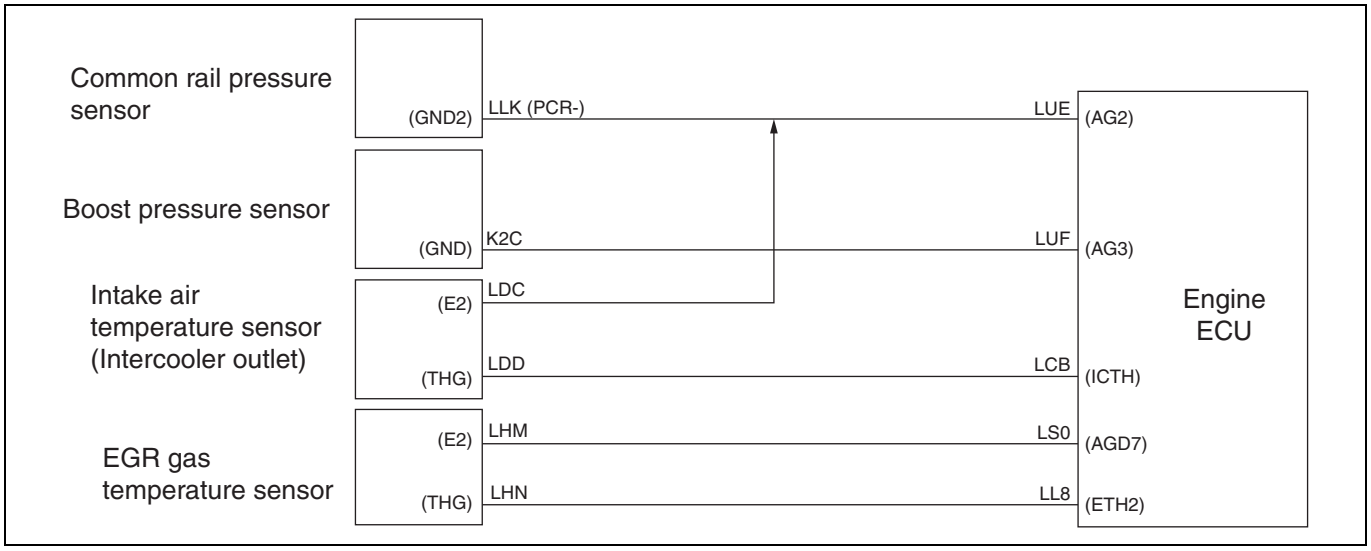


SAPH16F010300115

**1. Technical description**

- The intake air temperature sensor (intercooler outlet) installed to the downstream of the boost pressure sensor consistently measures temperature at the outlet of the intercooler.

**<Description of malfunction>**

- The intake air temperature at the intercooler outlet cannot be correctly recognized.

**2. DTC set condition**

(1) DTC detection condition

- Starter switch ON.
- Battery voltage is in the range of 10 V to 16 V.
  The conditions described above remain for 5 seconds or longer.

(2) Judgment criteria

- Output of the intake air temperature sensor (intercooler outlet) remains at 0.07 V or less for 3 seconds or longer.

**3. Reset condition**

- After restoration to normal condition.

**4. Indication, warning or system control regulation when the DTC is set.**

- MIL: ON
- SVS light: OFF

**5. Symptoms on the vehicle when the DTC is set**

**<Symptoms on the vehicle due to backup control (fail safe function)>**

- –

**<Symptoms on the vehicle due to malfunction>**

- –

**6. Pre-inspection work**

- Check that the battery voltage is in the normal range.

**7. After-inspection work**

- Clear all past DTCs.
- Check that no DTC is detected after test drive.

**8. Estimated failure factors**

- Disconnection or short-circuit in sensor harness
- Faulty connector contact or fit
- Intake air temperature sensor (intercooler outlet) failure
  - Abnormal resistance
  - Internal short
- Failure in engine ECU sensor power supply or internal circuit

## P007D: Intake air temperature sensor (intercooler outlet) - out of range (Out of range high)

INFORMATION

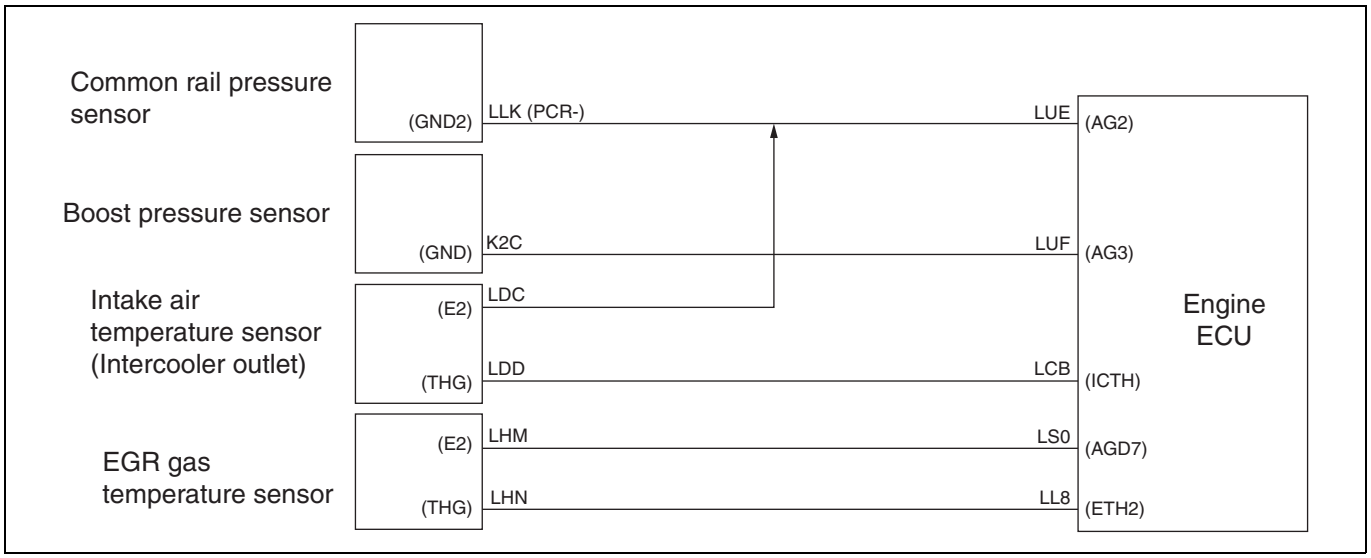


SAPH16F010300116

**1. Technical description**

- The intake air temperature sensor (intercooler outlet) installed to the downstream of the boost pressure sensor consistently measures temperature at the outlet of the intercooler.

**<Description of malfunction>**

- The intake air temperature at the intercooler outlet cannot be correctly recognized.

**2. DTC set condition**

(1) Check conditions

- Starter switch ON.
- Battery voltage is in the range of 10 V to 16 V.
- The conditions described above remain for 5 seconds or longer.

(2) Judgment criteria

- Output of the intake air temperature sensor (intercooler outlet) remains at 4.87 V or higher for 3 seconds or longer.

**3. Reset condition**

- After restoration to normal condition.

**4. Indication, warning or system control regulation when the DTC is set.**

- MIL: ON
- SVS light: OFF

**5. Symptoms on the vehicle when the DTC is set**

**<Symptoms on the vehicle due to backup control (fail safe function)>**

- –

**<Symptoms on the vehicle due to malfunction>**

- –

**6. Pre-inspection work**

- Check that the battery voltage is in the normal range.

**7. After-inspection work**

- Clear all past DTCs.
- Check that no DTC is stored after test drive.

**8. Estimated failure factors**

- Disconnection or short-circuit in sensor harness
- Faulty connector contact or fit
- Intake air temperature sensor (intercooler outlet) failure
  - Abnormal resistance
  - Internal short
- Failure in engine ECU sensor power supply or internal circuit

## INSPECTION PROCEDURE: P007C and P007D

| 1 | Inspect the intake air temperature sensor (intercooler outlet) connector |
|---|---|

1. Check the connection of the intake air temperature sensor (intercooler outlet) connector (Looseness and poor contact).

**Was any failure found?**

**YES**

**Connect securely, repair if needed.**
**Perform "After-inspection work" of INFORMATION section.**

**NO**

**Go to step 2.**

| 2 | Inspect the intake air temperature sensor (intercooler outlet) |
|---|---|

1. Check the installation of the intake air temperature sensor (intercooler outlet).
2. Make sure there is no dirt or damage to the intake air temperature sensor (intercooler outlet).

**Was any failure found?**

**YES**

**Clean the intake air temperature sensor (intercooler outlet) and install it properly.**
**If damaged, replace the sensor.**
**Perform "After-inspection work" of INFORMATION section.**

**NO**

**Go to step 3.**

| 3 | Inspect the intake air temperature sensor (intercooler outlet) unit |
|---|---|

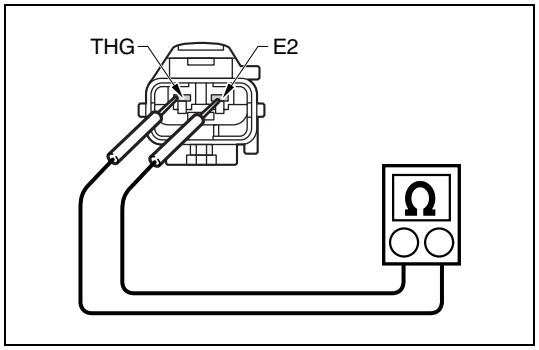

SAPH16F010300117

1. Set the starter switch to the "LOCK" position.
2. Disconnect the intake air temperature sensor (intercooler outlet) connector.
3. Use the electrical tester to measure the resistance between the terminals of the intake air temperature sensor (intercooler outlet).

| Measurement conditions | Tester connections | Standard values |
|---|---|---|
| Starter switch: LOCK | Intake air temperature sensor (intercooler outlet) THG – E2 | 20 °C {68 °F}: 7.336 – 5.794 kΩ<br>50 °C {122 °F}: 2.435 – 1.994 kΩ |

**Do the measurements meet the standard value?**

**YES**

**Go to step 4.**

**NO**

**Replace the intake air temperature sensor (intercooler outlet).**
**Perform "After-inspection work" of INFORMATION section.**

| 4 | Inspect the intake air temperature sensor (intercooler outlet) power supply |
|---|---|

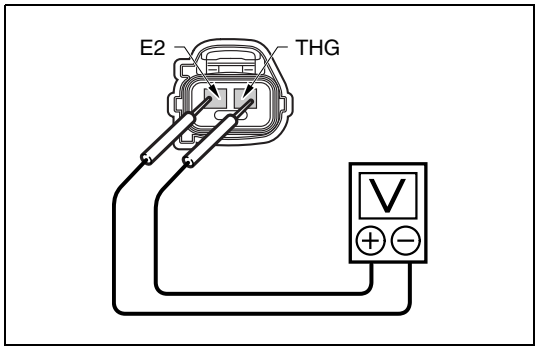

SAPH16F010300118

1. Set the starter switch to the "ON" position.
2. Use the electrical tester to measure the voltage between the terminals of the intake air temperature sensor (intercooler outlet) vehicle-side connector.

| Measurement conditions | Tester connections | Standard values |
|---|---|---|
| Starter switch: ON | Intake air temperature sensor (intercooler outlet) vehicle-side connector E2 – THG | 4.5 – 5.5 V |

**Do the measurements meet the standard value?**

**YES**

**Go to step 7.**

**NO**

**Go to step 5.**

| 5 | Inspect for short-circuit in wire harness of intake air temperature sensor (intercooler outlet) |
|---|---|

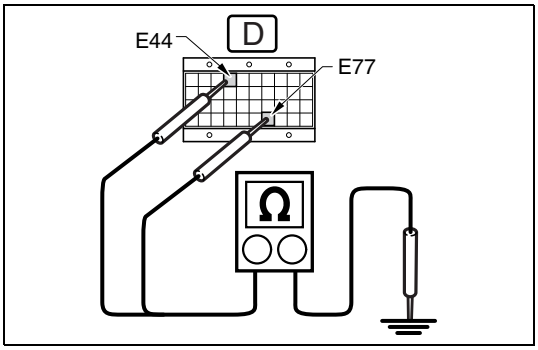

SAPH16F010300119

1. Set the starter switch to the "LOCK" position.
2. Connect the signal check harness to the engine ECU vehicle-side harness. (Do not connect harness to the ECU.)
3. Use the electrical tester to measure the resistance between the engine ECU (signal check harness) terminals and ground.

| Measurement conditions | Tester connections | Standard values |
|---|---|---|
| **Starter switch: LOCK** | **Engine ECU (signal check harness) E44(ICTH) – Ground E77(AG3) – Ground** | **∞ Ω** |

**Do the measurements meet the standard value?**

**YES**

**Go to step 6.**

**NO**

**Repair or replace the harness.**
**Perform "After-inspection work" of INFORMATION section.**

| 6 | Inspect for disconnection in wire harness of intake air temperature sensor (intercooler outlet) |
|---|---|

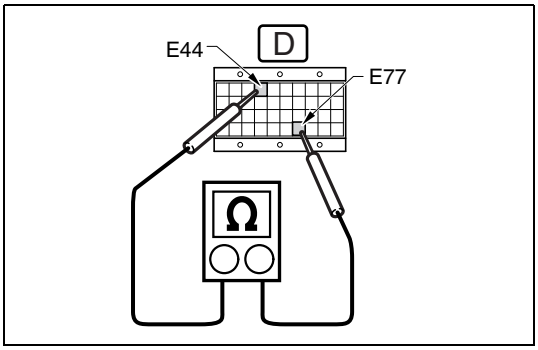

SAPH16F010300120

1. Connect the intake air temperature sensor (intercooler outlet) connector.
2. Use the electrical tester to measure the resistance between the terminals of the engine ECU (signal check harness).

| Measurement conditions | Tester connections | Standard values |
|---|---|---|
| **Starter switch: LOCK** | **Engine ECU (signal check harness) E44(ICTH) – E77(AG3)** | **20 °C {68 °F}: 7.336 – 5.794 kΩ 50 °C {122 °F}: 2.435 – 1.994 kΩ** |

**Do the measurements meet the standard value?**

**YES**

**Go to step 7.**

**NO**

**Repair or replace the harness.**
**Perform "After-inspection work" of INFORMATION section.**

| 7 | Check the DTC detected (Engine ECU) [HINO DX ll ] |
|---|---|

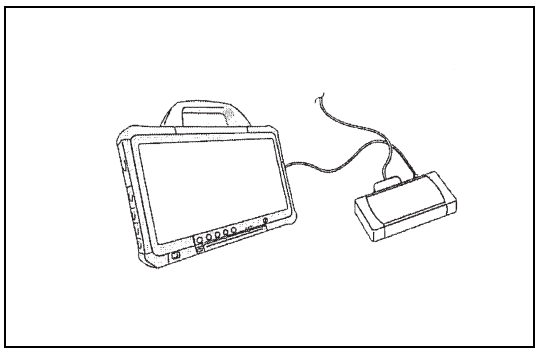

SAPH16F010300121

1. Warm-up the engine. (engine coolant temperature: 60 °C {140 °F} or more)
2. Stop the engine and set the starter switch to the "LOCK" position.
3. Connect the vehicle to HINO DX II .
4. Set the starter switch to the "ON" position.
5. Select [Engine] and check if the DTC (P007C or P007D) has been detected.

**Has DTC (P007C or P007D) been detected?**

**YES**

**Replace the engine ECU.**
**Perform "After-inspection work" of INFORMATION section.**

**NO**

**Procedure completed.**
**Perform "After-inspection work" of INFORMATION section.**

# DTC: P0088

EN01H16F01030F03001028

## P0088: Excessive common-rail pressure

INFORMATION

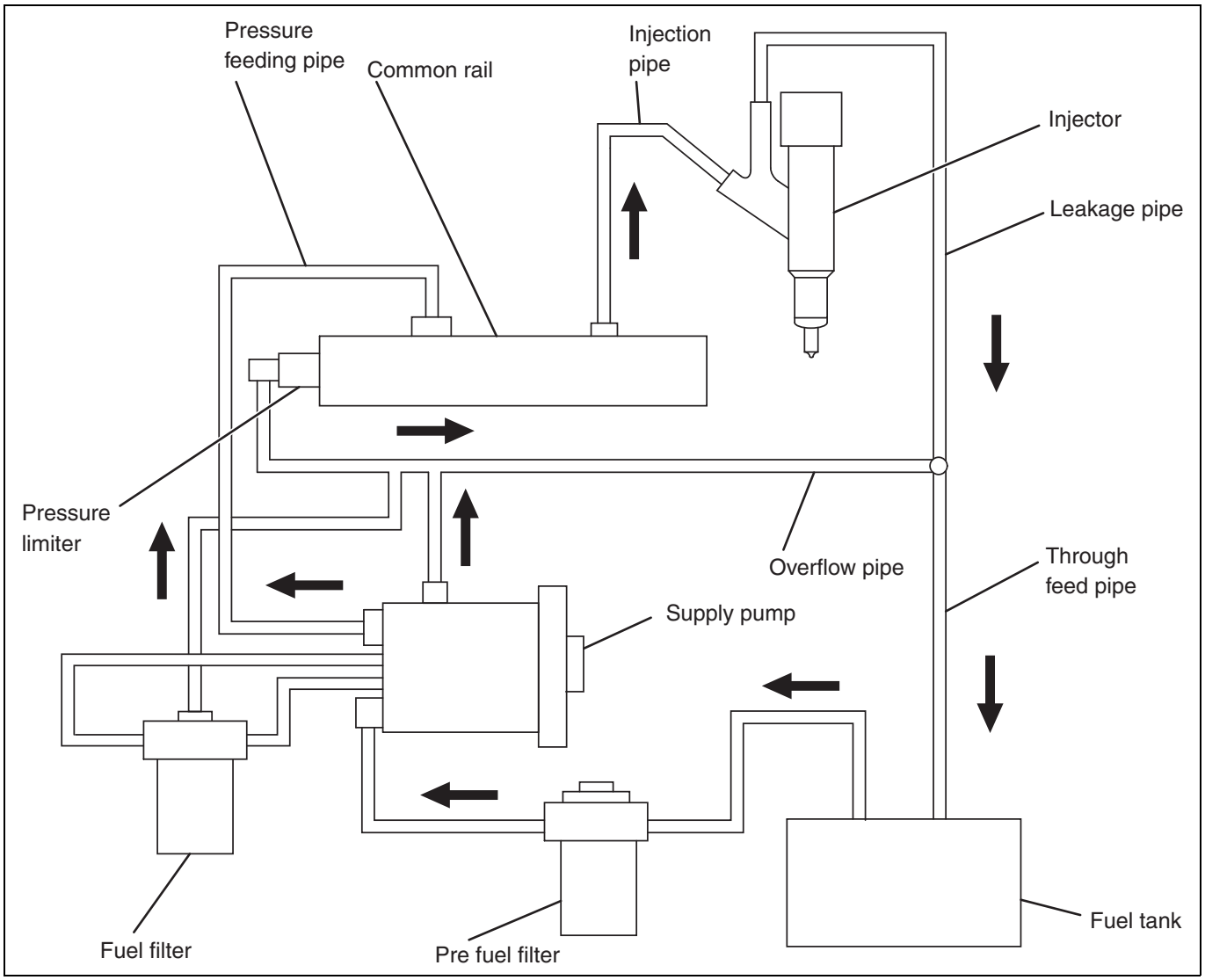


SAPH16F010300122

**1. Technical description**

- Common rail pressure is controlled by a discharge quantity of the supply pump.
- Discharge quantity of the supply pump is adjusted by the SCV (suction control valve).

**<Description of malfunction>**

- Abnormally high fuel pressure inside common rail is detected.

**2. DTC set condition**

(1) DTC detection condition

- Engine speed of 700 r/min or more
- The fuel injection quantity is 10 $mm^3$/st. cyl or more.
- A change in fuel injection quantity is less than 1.7 $mm^3$/st. cyl.
- SCV amperage reading is 1,500 mA or higher.
- No DTCs related to supply pump

(2) Judgment criteria

- A calculated value of (actual common rail pressure reading – Target common rail pressure.) remains at 15 MPa or greater for 15 seconds.

**3. Reset condition**

- After normal operation is restored and the starter switch is on the "LOCK" position.

**4. Indication, warning or system control regulation when the DTC is set.**

- MIL: OFF
- SVS light: OFF
- Engine output is restricted.
- Cruise control function is not available.

**5. Symptoms on the vehicle when the DTC is set**

**<Symptoms on the vehicle due to backup control (fail safe function)>**

- Engine output is insufficient.
- Cruise control does not work.

**<Symptoms on the vehicle due to malfunction>**

- Cruise control does not work.

**6. Pre-inspection work**

- Check that the battery voltage is in the normal range.

**7. After-inspection work**

- Clear all past DTCs.
- Check that no DTC is stored after test drive.

**8. Estimated failure factors**

- Pre fuel filter: Clogging
- Common rail pressure sensor:
  - Irregular contact (fault in power supply, fault in GND)
  - Fault in sensor
- Supply pump:
  - Fault in SCV
  - Fault in learned value
- Common rail: Pressure limiter opening valve
- Harness related:
  - Irregular contact of crankshaft position sensor and camshaft position sensor
  - Misconnection

## INSPECTION PROCEDURE: P0088

| 1 | Inspect the start of the engine |
|---|---|

1. Inspect the start of the engine.

**Does the engine start?**

YES → **Go to step 4.**

NO → **Go to step 2.**

| 2 | Inspect the supply pump |
|---|---|

1. Check if fuel is leaking or seeping out of the supply pump.

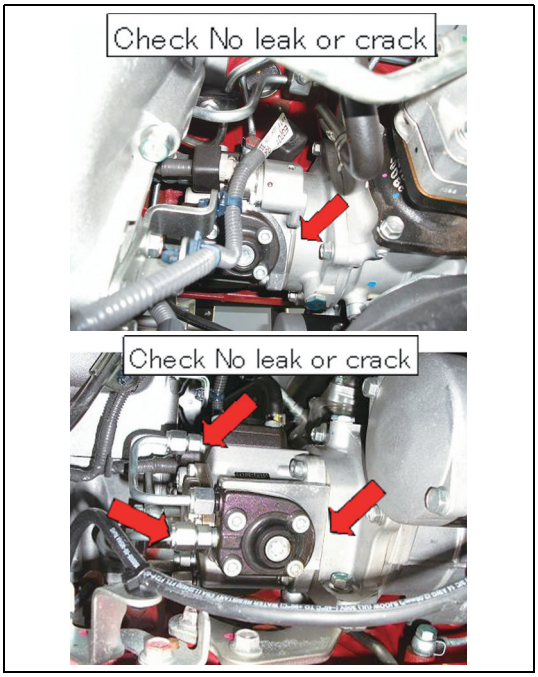


SAPH16F010300123

**Was any failure found?**

YES → **Replace the supply pump, and go to step 4.**

NO → **Go to step 3.**

| 3 | Function check of supply pump [HINO DX II ] |
|---|---|

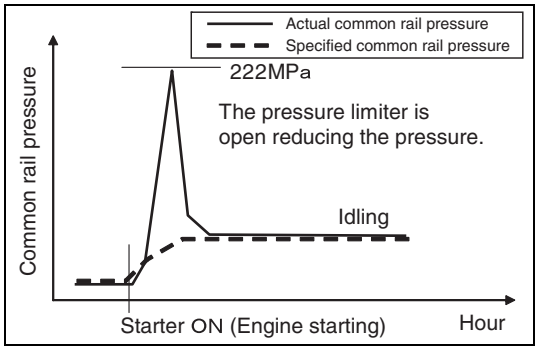

SAPH16F010300124

1. Connect the vehicle to HINO DX II .
2. Set the starter switch to the "ON" position.
3. Select [Engine].
4. Select [Actual common rail pressure] and [Target common rail pressure] in [Data monitor Setting].
5. Start the engine while checking the common rail pressure.

| Standard values |
|---|
| **The actual common rail pressure rises and stabilizes at a constant value.** |

**Was any failure found?**

**YES**

**Replace the supply pump, go to step 4.**

**NO**

**Go to step 4.**

| 4 | Check the engine ECU |
|---|---|

1. Check the engine ECU software part number (ECU part number) by HINO DX II .
   Confirm the latest part number with Hino national service manager.

**Does the engine ECU have the latest software number?**

**YES**

**Go to step 5.**

**NO**

**Reprogram the engine ECU by using HINO DX II and then go to step 5.**

| 5 | Inspect the fuel filter |
|---|---|

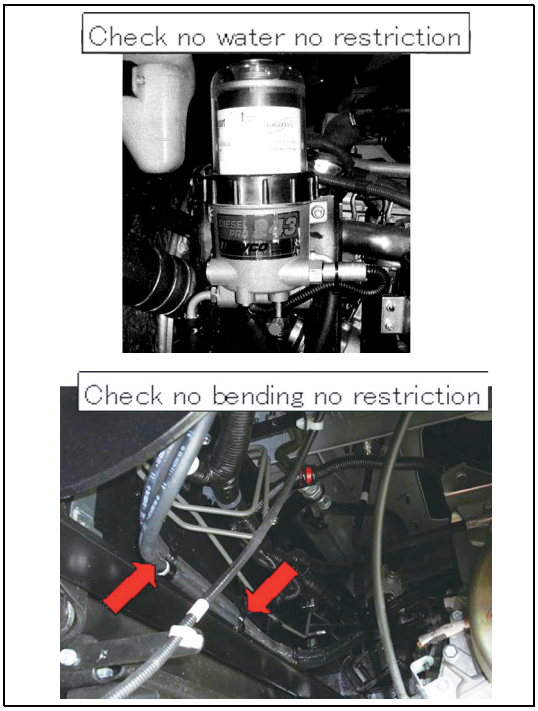


SAPH16F010300125

1. Check the fuel filter.
- Has the replacement period expired?
- Is it dirty, damaged, or clogged?
- Is it a genuine Hino part?

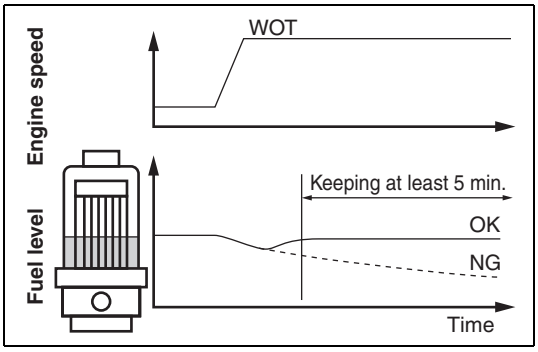


SAPH16F010300126

2. Check if the fuel inside the fuel filter is within the standard value.

| Measurement conditions | Standard values |
|---|---|
| **While engine is running** | • **At least 25.4 mm {1 in.} above collar and below the element upper level.**<br>• **High-sped idle ≥ wide open throttle Fuel level does not continue to drop during wide open throttle.** |

**Was any failure found?**

**YES**

**Replace the pre fuel filter element, and go to step 6.**

**NO**

**Go to step 11.**

| 6 | Inspect the fuel pipe |
|---|---|

1. Check if the fuel pipe and hose between the fuel tank and pre fuel filter are clogged, punctured, or bent.
2. Make sure the fuel pipe joint bolts are not loose.

**Was any failure found?**

**YES**

**Repair or replace the faulty part, and go to step 7.**

**NO**

**Go to step 7.**

| 7 | Inspect the fuel tank breather |
|---|---|

1. Check if the breather hose is clogged, punctured, or bent.
2. Make sure the check valve is functioning normally.

**Was any failure found?**

**YES**

**Repair or replace the faulty part, and go to step 8.**

**NO**

**Go to step 8.**

| 8 | Inspect the fuel tank feed pipe |
|---|---|

1. Make sure the fuel tank feed pipe is not clogging.

**Was any failure found?**

**YES**

**Repair or replace the faulty part and, go to step 9.**

**NO**

**Go to step 9.**

| 9 | Inspect the fuel tank |
|---|---|

1. Drain fuel out of the fuel tank and check if there are foreign objects inside the tank.

**Was any failure found?**

| YES | NO |
|---|---|
| **Remove the foreign object and clean the fuel tank.<br>Then go to step 10.** | **Go to step 10.** |

| 10 | Inspect the supply pump gauze filter |
|---|---|

1. Make sure the gauze filter (built into the supply pump) is not clogged.

**Was any failure found?**

| YES | NO |
|---|---|
| **Clean the gauze filter, and go to step 11.** | **Go to step 11.** |

| 11 | Inspect the fuel high-pressure pipe |
|---|---|

1. Make sure the fuel high-pressure pipe is not leaking fuel.

**Was any failure found?**

| YES | NO |
|---|---|
| **Repair or replace the faulty part, and go to step 12.** | **Go to step 12.** |

| 12 | Inspect the fuel filter |
|---|---|

1. Make sure the fuel filter is not clogging.

**Was any failure found?**

| YES | NO |
|---|---|
| **Repair or replace the faulty part, and go to step 13.** | **Go to step 13.** |

| 13 | Inspect the SCV connector |
|---|---|

1. Check the connection of the SCV connector (Looseness and poor contact).

**Was any failure found?**

YES

**Repair or replace the faulty part, and go to step 14.**

NO

**Go to step 14.**

## 14 Inspect the common rail pressure sensor connector

1. Check the connection of the common rail pressure sensor connector (Looseness and poor contact).

**Was any failure found?**

YES

**Repair or replace the faulty part, and go to step 15.**

NO

**Go to step 15.**

## 15 Inspect the common rail pressure sensor power supply

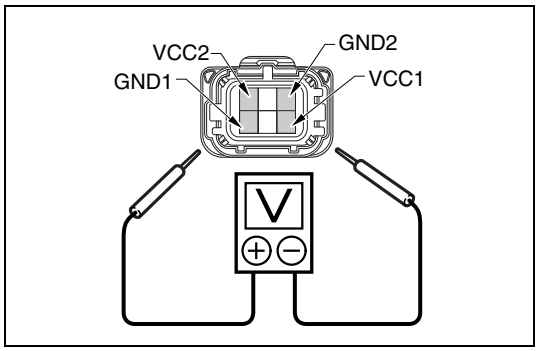


SAPH16F010300127

1. Disconnect the common rail pressure sensor connector.
2. Set the starter switch to the "ON" position.
3. Use the electrical tester to measure the voltage between the terminals of the common rail pressure sensor vehicle-side connector.

| Measurement conditions | Tester connections | Standard values |
|---|---|---|
| Starter switch: ON | Common rail pressure sensor vehicle-side connector<br>VCC1 – GND1<br>VCC2 – GND2 | 4.5 – 5.5 V |

**Do the measurements meet the standard value?**

YES

**Go to step 16.**

NO

**Replace the common rail pressure sensor and then go to step 16.**

| 16 | Inspect the crankshaft position sensor (engine speed main sensor) [HINO DX ll ] |
|---|---|

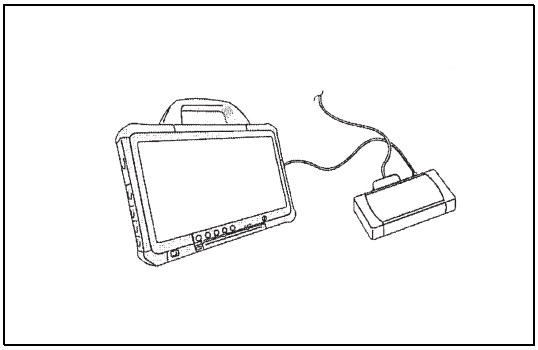

SAPH16F010300128

1. Set the starter switch to the "ON" position.
2. Select [Engine].
3. Select [NE Active identification], [G Active identification] in [Data monitor Setting].
4. Start the engine and confirm that the engine main speed sensor (NE) and sub speed sensor (G) operate (stay ON) continuously.

**Was any failure found?**

**YES**

**Check the faulty the crankshaft position sensor (engine speed main sensor) and repair or replace it as needed.**
**After inspection, go to step 17.**

**NO**

**Go to step 17.**

| 17 | Inspect the fuel return pipe and hose |
|---|---|

1. Check if the fuel return pipe and hose are clogged.

**Was any failure found?**

**YES**

**Repair or replace the faulty part.**
**Perform "After-inspection work" of INFORMATION section.**

**NO**

**Procedure completed.**
**Perform "After-inspection work" of INFORMATION section.**

# DTC: P0096

EN01H16F01030F03001029

## P0096: Intake air temperature sensor (intake manifold) - rationality

INFORMATION [at engine start]

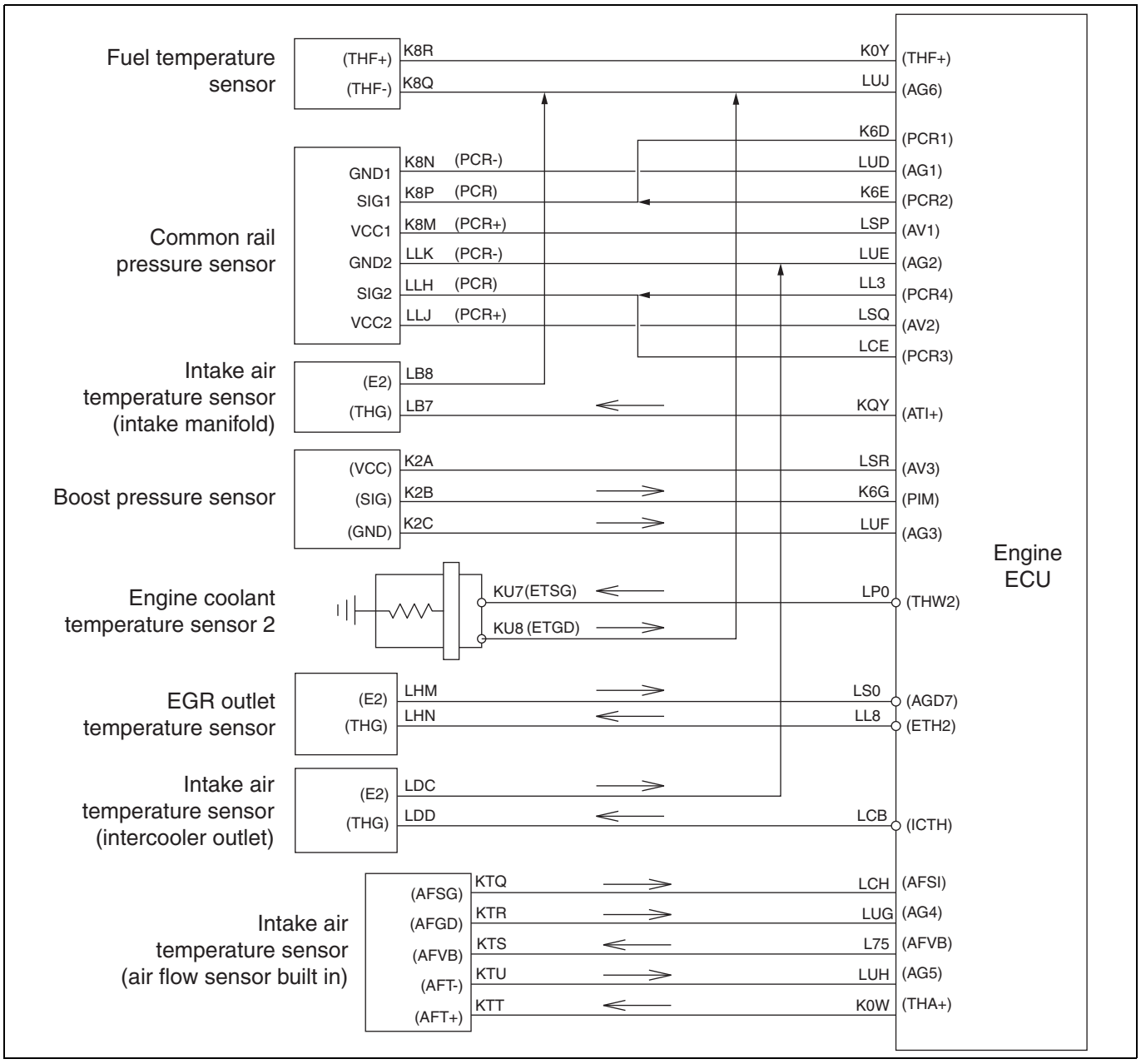


SAPH16F010300129

### 1. Technical description

- The intake air temperature sensor (intake manifold) installed to the intake manifold consistently measures intake manifold temperature.

**<Description of malfunction>**

- The intake manifold temperature cannot be correctly recognized.

**2. DTC set condition**

(1) DTC detection condition

- Engine speed is in the range of 500 to 1,000 r/min.
- The fuel injection quantity is 35 $mm^3$/st. cyl or less.
- Engine coolant temperature is in the range of -30 °C {-22 °F} to 55 °C {131 °F}.
- Battery voltage is in the range of 10 V to 16 V.
- EGR valve is fully closed.

(2) Judgment criteria

- A difference between the intake air temperature sensor (intake manifold) value and the intake air temperature sensor value built in the air flow sensor remains at 30 °C {86 °F} or greater for 40 seconds or longer and a difference between the intake air temperature sensor (intercooler outlet) value and the intake air temperature sensor (intake manifold) value remains at 30 °C {86 °F} or greater for 40 seconds or longer.

**3. Reset condition**

- After restoration to normal condition.

**4. Indication, warning or system control regulation when the DTC is set.**

- MIL: ON
- SVS light: OFF

**5. Symptoms on the vehicle when the DTC is set**

**<Symptoms on the vehicle due to backup control (fail safe function)>**

- –

**<Symptoms on the vehicle due to malfunction>**

- –

**6. Pre-inspection work**

- Check that the battery voltage is in the normal range.

**7. After-inspection work**

- Clear all past DTCs.
- Check that no DTC is stored after test drive.

**8. Estimated failure factors**

- Failure of intake air temperature sensor (intercooler outlet)
- Failure of intake air temperature sensor (with built-in air flow sensor)
- Failure of intake air temperature sensor (intake manifold)
  - Sensor is disconnected from measuring site or sensing unit is malfunctioning (due to dirt, clogging, damage, etc.)
  - Faulty resistance (due to sticking)
- Malfunction of ECU sensor power supply

## P0096: Intake air temperature sensor (intake manifold) - rationality

INFORMATION [at engine running]

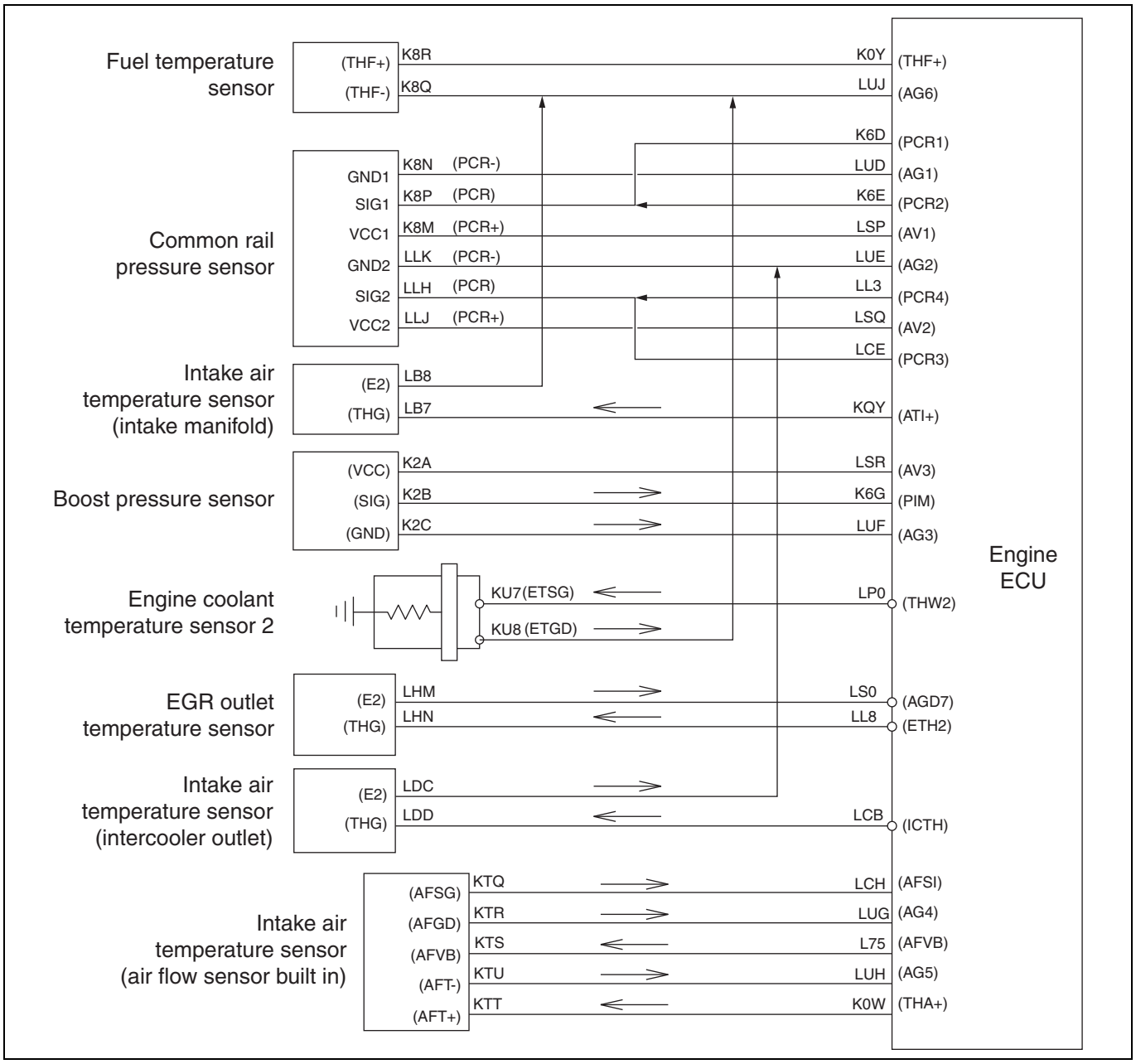


SAPH16F010300130

**1. Technical description**

- The intake air temperature sensor (intake manifold) installed to the intake manifold consistently measures intake manifold temperature.

**<Description of malfunction>**

- The intake manifold temperature cannot be correctly recognized.

**2. DTC set condition**

(1) DTC detection condition

- Engine speed ≥ 1,500 r/min.
- Fuel injection quantity ≥ 40 $mm^3$/st. cyl.
- Battery voltage is in the range of 10 V to 16 V.
- Engine speed fluctuation < 156 r/min/sec.
- Fuel injection quantity fluctuation < 87 $mm^3$/st. cyl.
- Atmospheric pressure ≥ 75 kPa {10.8 psi}.
- Vehicle speed ≥ 21 km/h {13 mph}.
- Air intake quantity ≥ 75 g/sec.
- Intake air temperature sensor (with built-in air flow sensor) ≥ -10 °C {14 °F}.

The above conditions continue for at least 40 seconds.

(2) Judgment criteria

- The calculated intercooler efficiency, which is derived from the intake air temperature sensor, boost pressure sensor, intake air temperature sensor (intercooler outlet), and atmospheric pressure sensor, exceeds 45 – 65 % (for vehicle speeds 21 and 40 km/h {13 and 25 mph}).
- And: The calculated EGR cooler efficiency, which is derived from the engine speed, fuel injection rate, EGR gas outlet temperature, and coolant temperature, either exceeds 105 % or is less than 80 %.
- And: The estimated EGR quantity calculated from the engine speed and fuel injection rate, the estimated intake manifold temperature calculated from the EGR gas outlet temperature sensor and intake air temperature sensor (intercooler outlet), and the absolute value of the actual intake manifold temperature are at least 60 °C {140 °F}.

**3. Reset condition**

- After restoration to normal condition.

**4. Indication, warning or system control regulation when the DTC is set.**

- MIL: ON
- SVS light: OFF

**5. Symptoms on the vehicle when the DTC is set**

**<Symptoms on the vehicle due to backup control (fail safe function)>**

- –

**<Symptoms on the vehicle due to malfunction>**

- –

**6. Pre-inspection work**

- Check that the battery voltage is in the normal range.

**7. After-inspection work**

- Clear all past DTCs.
- Check that no DTC is stored after test drive.

**8. Estimated failure factors**

- Failure of intake air temperature sensor (intercooler outlet)
- Failure of intake air temperature sensor (with built-in air flow sensor)
- Failure of intake air temperature sensor (intake manifold)
- Failure of boost pressure sensor
  - Sensor is disconnected from measuring site or sensing unit is malfunctioning (due to dirt, clogging, damage, etc.)
  - Faulty resistance (due to sticking)
- Malfunction of ECU sensor power supply

## INSPECTION PROCEDURE: P0096

| 1 | Check the DTC detected (Engine ECU) [HINO DX ll ] |
|---|---|

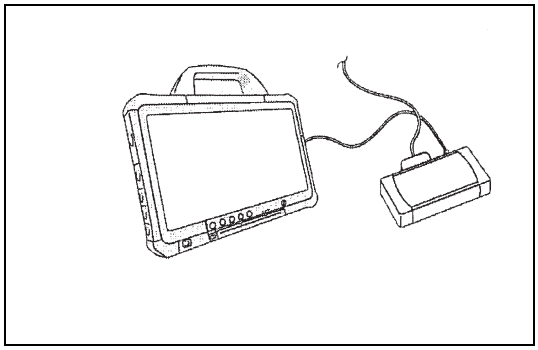

SAPH16F010300131

1. Set the starter switch to the "LOCK" position.
2. Connect the vehicle to HINO DX II .
3. Set the starter switch to the "ON" position.
4. Select [Engine] and check if any DTC other than P0096 (for example, P0401, P0402, P0404, P0234, P0299, P22D3, turbo, EGR DTC) has been detected.

**HINT**
**Intake air temperature sensor (intercooler outlet) characteristic abnormality judgment is performed based on the boost pressure and EGR quantity data.**
**If EGR system or Turbo DTC are detected, perform another failure diagnosis starting from the first DTC associated with the malfunction.**

**Has a DTC other than P0096 been detected?**

**YES**

**Go to the diagnostic procedure of a related DTC.**

**NO**

**Go to step 2.**

| 2 | Inspect the intake air temperature sensor (intake manifold) connector |
|---|---|

1. Check the connection of the intake air temperature sensor (intake manifold) connector (Looseness and poor contact).

**Was any failure found?**

**YES**

**Connect securely, repair if needed.**
**Perform "After-inspection work" of INFORMATION section.**

**NO**

**Go to step 3.**

| 3 | Inspect the intake air temperature sensor (intake manifold) |
|---|---|

1. Check the installation of the intake air temperature sensor (intake manifold).
2. Make sure there is no dirt or damage to the intake air temperature sensor (intake manifold).

**Was any failure found?**

**YES**

**Clean the intake air temperature sensor (intake manifold) and install it properly.**
**If damaged, replace the intake air temperature sensor (intake manifold).**
**Perform "After-inspection work" of INFORMATION section.**

**NO**

**Go to step 4.**

| 4 | Inspect the intake air temperature sensor (intake manifold) unit |
|---|---|

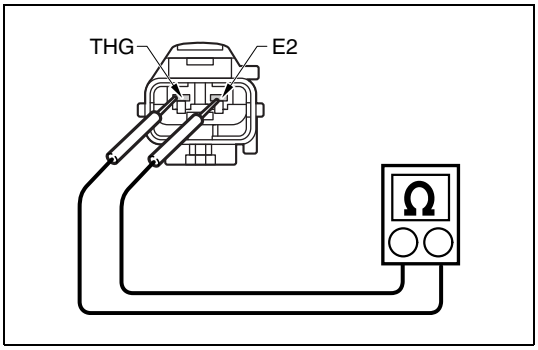

SAPH16F010300132

1. Set the starter switch to the "LOCK" position.
2. Disconnect the intake air temperature sensor (intake manifold) connector.
3. Use the electrical tester to measure the resistance between the terminals of the intake air temperature sensor (intake manifold).

| Measurement conditions | Tester connections | Standard values |
|---|---|---|
| Starter switch: LOCK | Intake air temperature sensor (intake manifold) THG – E2 | 20 °C {68 °F}: 7.336 – 5.794 kΩ 50 °C {122 °F}: 2.435 – 1.994 kΩ |

**Do the measurements meet the standard value?**

**YES**

**Go to step 5.**

**NO**

**Replace the intake air temperature sensor (intake manifold).**
**Perform "After-inspection work" of INFORMATION section.**

## 5 Inspect the intake air temperature sensor (intake manifold) power supply

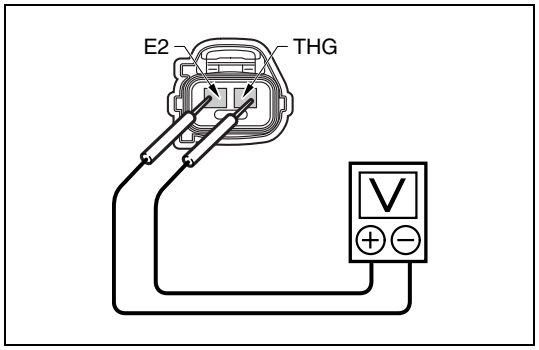


SAPH16F010300133

1. Set the starter switch to the "ON" position.
2. Use the electrical tester to measure the voltage between the terminals of the intake air temperature sensor (intake manifold) vehicle-side connector.

| Measurement conditions | Tester connections | Standard values |
|---|---|---|
| **Starter switch: ON** | **Intake air temperature sensor (intake manifold) vehicle-side connector THG- – E2** | **4.5 – 5.5 V** |

**Do the measurements meet the standard value?**

**YES**

**Go to step 8.**

**NO**

**Go to step 6.**

## 6 Inspect for short-circuit of the intake air temperature sensor (intake manifold) harness

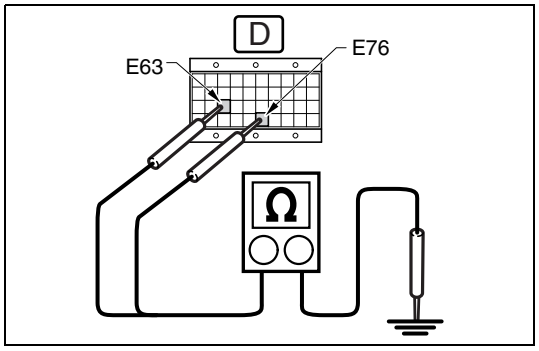


SAPH16F010300134

1. Set the starter switch to the "LOCK" position.
2. Connect the signal check harness to the engine ECU. (Do not connect harness to the ECU.)
3. Use the electrical tester to measure the resistance between the terminals of the engine ECU (signal check harness) and ground.

| Measurement conditions | Tester connections | Standard values |
|---|---|---|
| **Starter switch: LOCK** | **Engine ECU (signal check harness) ATI+(E63) – Ground AGD2(E76) – Ground** | **∞ Ω** |

**Do the measurements meet the standard value?**

**YES**

**Go to step 7.**

**NO**

**Repair or replace the harness.**
**Perform "After-inspection work" of INFORMATION section.**

| 7 | Inspect disconnection of the intake air temperature sensor (intake manifold) harness |
|---|---|

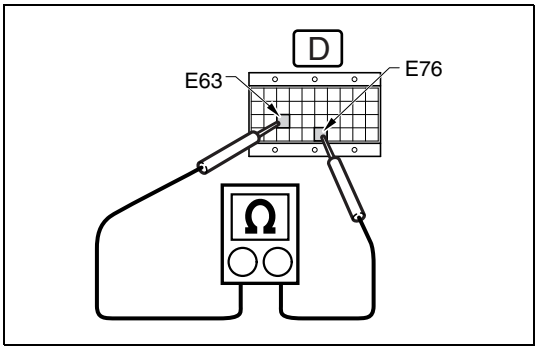

SAPH16F010300135

1. Connect the intake air temperature sensor (intake manifold) connector.
2. Use the electrical tester to measure the resistance between the terminals of the engine ECU (signal check harness).

| Measurement conditions | Tester connections | Standard values |
|---|---|---|
| Starter switch: LOCK | Engine ECU (signal check harness) ATI+(E63) – AGD2(E76) | 20 °C {68 °F}: 7.336 – 5.794 kΩ<br>50 °C {122 °F}: 2.435 – 1.994 kΩ |

**Do the measurements meet the standard value?**

**YES**

**Go to step 8.**

**NO**

**Repair or replace the harness.**
**Perform "After-inspection work" of INFORMATION section.**

| 8 | Inspect the intake air temperature sensor (air flow sensor built-in) |
|---|---|

1. Check the installation of the intake air temperature sensor (air flow sensor built-in).
2. Make sure there is no dirt or damage to intake air temperature sensor (air flow sensor built-in).

**Was any failure found?**

**YES**

**If the intake air temperature sensor (air flow sensor built-in) is dirty, clogged, or damaged, replace the air flow sensor.**
**Perform "After-inspection work" of INFORMATION section.**

**NO**

**Go to step 9.**

| 9 | Inspect the intake air temperature sensor (air flow sensor built-in) unit |
|---|---|

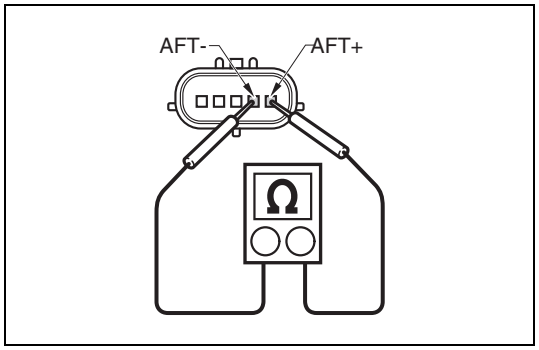


SAPH16F010300136

1. Set the starter switch to the "LOCK" position.
2. Disconnect the intake air temperature sensor (air flow sensor built-in) connector.
3. Use the electrical tester to measure the resistance between the terminals of the intake air temperature sensor (air flow sensor built-in).

| Measurement conditions | Tester connections | Standard values |
|---|---|---|
| **Starter switch: LOCK** | **Intake air temperature sensor (air flow sensor built-in) AFT+ – AFT-** | **20 °C {68 °F}: 2.69 – 2.21 kΩ 60 °C {140 °F}: 0.667 – 0.493 kΩ** |

**Do the measurements meet the standard value?**

**YES**

**Go to step 10.**

**NO**

**Replace the intake air temperature sensor (air flow sensor built-in).**
**Perform "After-inspection work" of INFORMATION section.**

| 10 | Inspect the intake air temperature sensor (intercooler outlet) |
|---|---|

1. Check the installation of the intake air temperature sensor (intercooler outlet).
2. Make sure there is no dirt or damage to intake air temperature sensor (intercooler outlet).

**Was any failure found?**

**YES**

**Clean the intake air temperature sensor (intercooler outlet) and install it properly.**
**If damaged, replace the intake air temperature sensor (intercooler outlet)**
**Perform "After-inspection work" of INFORMATION section.**

**NO**

**Go to step 11.**

## 11 Inspect the intake air temperature sensor (intercooler outlet) unit

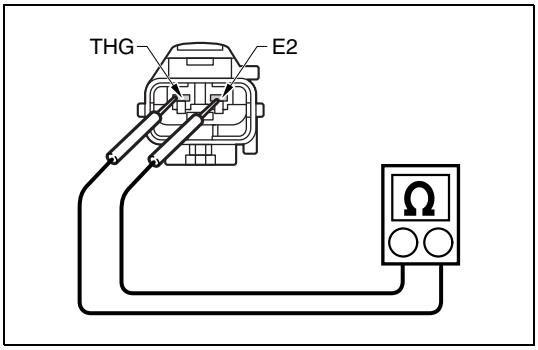

SAPH16F010300137

1. Set the starter switch to the "LOCK" position.
2. Disconnect the intake air temperature sensor (intercooler outlet) connector.
3. Use the electrical tester to measure the resistance between the terminals of the intake air temperature sensor (intercooler outlet).

| Measurement conditions | Tester connections | Standard values |
|---|---|---|
| Starter switch: LOCK | Intake air temperature sensor (intercooler outlet) THG – E2 | 20 °C {68 °F}: 7.336 – 5.794 kΩ 50 °C {122 °F}: 2.435 – 1.994 kΩ |

**Do the measurements meet the standard value?**

**YES**

**Go to step 12.**

**NO**

**Replace the intake air temperature sensor (intercooler outlet).**
**Perform "After-inspection work" of INFORMATION section.**

## 12 Inspect the boost pressure sensor hose.

1. Make sure the boost pressure sensor hose is not clogged, ruptured, or cracked.
2. Make sure the pipe on the intake manifold side is not clogged.

**Was any failure found?**

**YES**

**1. Replace the boost pressure sensor hose.**
**2. Clean the intake manifold pipe.**
**Perform "After-inspection work" of INFORMATION section.**

**NO**

**Go to step 13.**

| 13 | Inspect the boost pressure sensor power supply system |
|---|---|

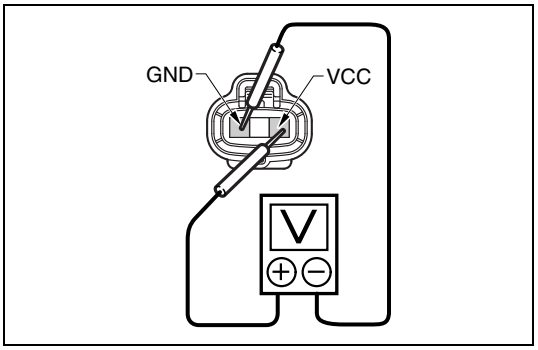

SAPH16F010300138

1. Set the starter switch to the "LOCK" position.
2. Disconnect the boost pressure sensor connector.
3. Set the starter switch to the "ON" position.
4. Use the electrical tester to measure the voltage between the terminals of the boost pressure sensor vehicle-side connector.

| Measurement conditions | Tester connections | Standard values |
|---|---|---|
| **Starter switch: ON** | **Boost pressure sensor vehicle-side connector VCC – GND** | **4.75 – 5.25 V** |

**Do the measurements meet the standard value?**

**YES**

**Go to step 14.**

**NO**

**Inspect the wire harness and engine ECU sensor power supply output valve.**
**Perform "After-inspection work" of INFORMATION section.**

| 14 | Check the DTC detected (Engine ECU) [HINO DX II ] |
|---|---|

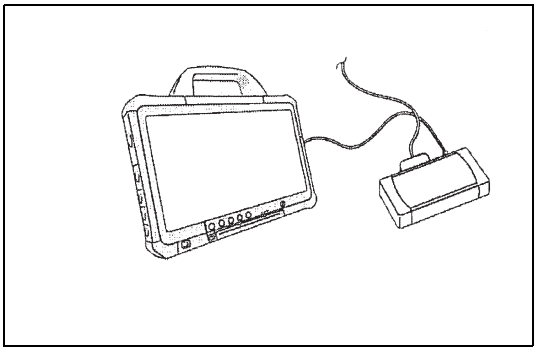
SAPH16F010300139

1. Perform engine warm-up. (engine coolant temperature: 60 °C {140 °F} or more)
2. Stop the engine and set the starter switch to the "LOCK" position.
3. Connect the vehicle to HINO DX II .
4. Set the starter switch to the "ON" position.
5. Select [Engine] and check if P0096 has been detected.

**Has DTC P0096 been detected?**

**YES**

**Replace the engine ECU.**
**Perform "After-inspection work" of INFORMATION section.**

**NO**

**Procedure completed.**
**Perform "After-inspection work" of INFORMATION section.**

# DTC: P0097 and P0098

EN01H16F01030F03001030

## P0097: Intake air temperature sensor (intake manifold) - out of range (Out of range low)

INFORMATION

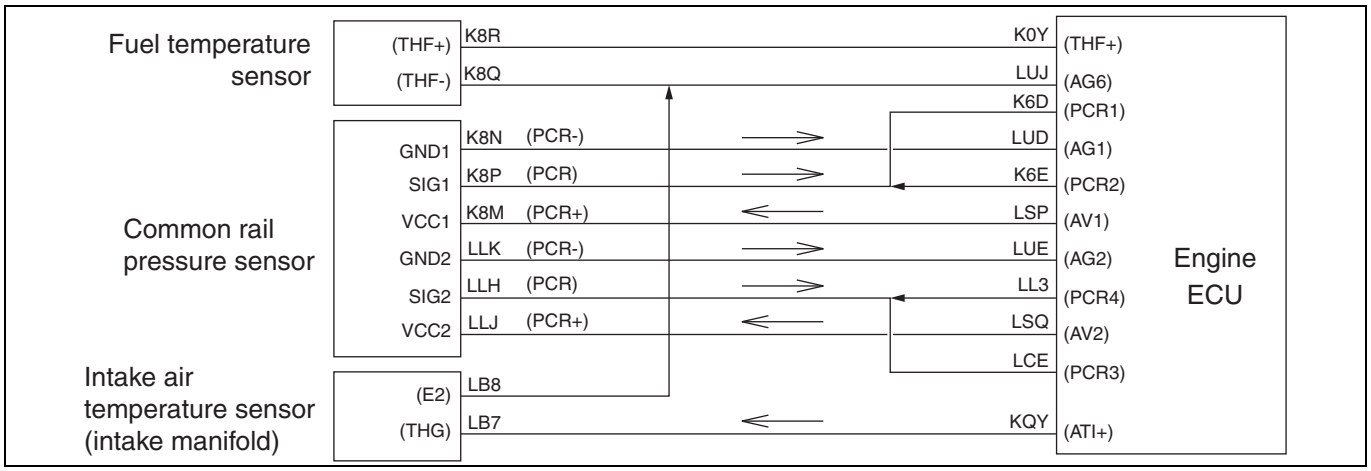


SAPH16F010300140

**1. Technical description**

- The intake air temperature sensor installed to the intake manifold consistently measures intake manifold temperature.

**<Description of malfunction>**

- The intake manifold temperature cannot be correctly recognized.

**2. DTC set condition**

(1) DTC detection condition

- Starter switch ON.
- Battery voltage is in the range of 10 V to 16 V
  - The conditions described above remain for 5 seconds or longer.

(2) Judgment criteria

- Intake air temperature sensor (intake manifold) output ≤ 0.97 V for at least 3 seconds.

**3. Reset condition**

- After restoration to normal condition.

**4. Indication, warning or system control regulation when the DTC is set.**

- MIL: ON
- SVS light: OFF

**5. Symptoms on the vehicle when the DTC is set**

**<Symptoms on the vehicle due to backup control (fail safe function)>**

- –

**<Symptoms on the vehicle due to malfunction>**

- –

**6. Pre-inspection work**

- Check that the battery voltage is in the normal range.

**7. After-inspection work**

- Clear all past DTCs.
- Check that no DTC is stored after test drive.

**8. Estimated failure factors**

- Disconnection or short-circuit in sensor harness
- Faulty connector contact or fit
- Intake air temperature sensor (intake manifold):
  - Loose/disconnected sensor or failure in sensing area (contamination, clogging or breakage)
  - Abnormality in resistance of sensor
- Failure in engine ECU sensor power supply

## P0098: Intake air temperature sensor (intake manifold) - out of range (Out of range high)

INFORMATION

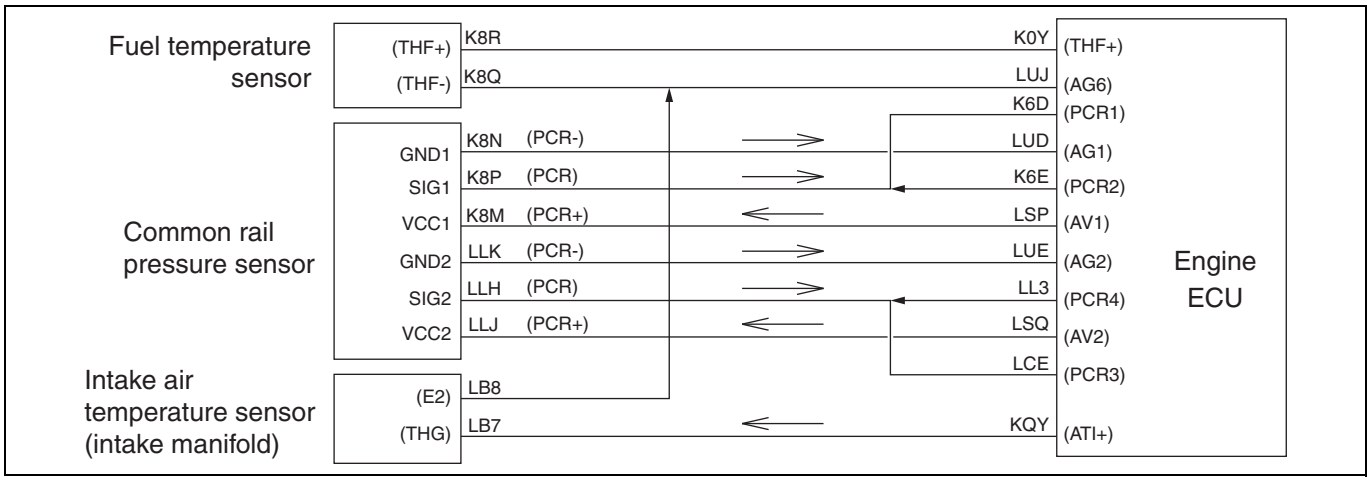


SAPH16F010300141

**1. Technical description**

- The intake air temperature sensor (intake manifold) installed to the intake manifold consistently measures intake manifold temperature.

**<Description of malfunction>**

- The intake manifold temperature cannot be correctly recognized.

**2. DTC set condition**

(1) DTC detection condition

- Starter switch ON.
- Battery voltage is in the range of 10 V to 16 V
  - The conditions described above remain for 5 seconds or longer.

(2) Judgment criteria

- Intake air temperature sensor (intake manifold) output remains less than 4.87 V (-35 °C {-31 °F}) for 3 seconds or longer.

**3. Reset condition**

- After restoration to normal condition.

**4. Indication, warning or system control regulation when the DTC is set.**

- MIL: ON
- SVS light: OFF

**5. Symptoms on the vehicle when the DTC is set**

**<Symptoms on the vehicle due to backup control (fail safe function)>**

- –

**<Symptoms on the vehicle due to malfunction>**

- –

**6. Pre-inspection work**

- Check that the battery voltage is in the normal range.

**7. After-inspection work**

- Clear all past DTCs.
- Check that no DTC is stored after test drive.

**8. Estimated failure factors**

- Disconnection or short-circuit in sensor harness
- Faulty connector contact or fit
- Intake air temperature sensor (intake manifold):
  - Loose/disconnected sensor or failure in sensing area (contamination, clogging or breakage)
  - Abnormality in resistance of sensor
- Failure in engine ECU sensor power supply

## INSPECTION PROCEDURE: P0097 and P0098

| 1 | Inspect the intake air temperature sensor (intake manifold) connector |
|---|---|

1. Check the connection of the intake air temperature sensor (intake manifold) connector (Looseness and poor contact).

**Was any failure found?**

**YES**

**Connect securely, repair if needed.**
**Perform "After-inspection work" of INFORMATION section.**

**NO**

**Go to step 2.**

| 2 | Inspect the intake air temperature sensor (intake manifold) |
|---|---|

1. Check the installation of the intake air temperature sensor (intake manifold).
2. Make sure there is no dirt or damage to the intake air temperature sensor (intake manifold).

**Was any failure found?**

**YES**

**Remove all contaminants and clogging.**
**Replace if damaged.**
**Perform "After-inspection work" of INFORMATION section.**

**NO**

**Go to step 3.**

## 3 Inspect the intake air temperature sensor (intake manifold) unit

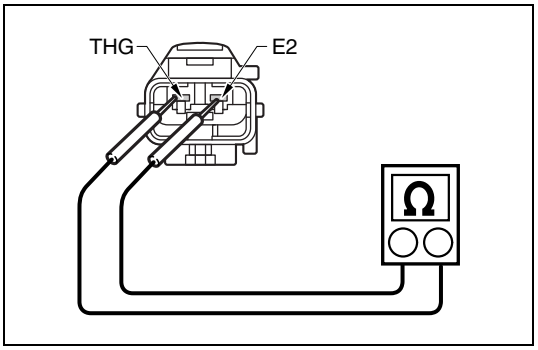


SAPH16F010300142

1. Set the starter switch to the "LOCK" position.
2. Disconnect the intake air temperature sensor (intake manifold) connector.
3. Use the electrical tester to measure the resistance between the terminals of the intake air temperature sensor (intake manifold).

| Measurement conditions | Tester connections | Standard values |
|---|---|---|
| Starter switch: LOCK | Intake air temperature sensor (intake manifold) THG – E2 | 20 °C {68 °F}: 7.336 – 5.794 kΩ<br>50 °C {122 °F}: 2.435 – 1.994 kΩ |

**Do the measurements meet the standard value?**

**YES**

**Go to step 4.**

**NO**

**Replace the intake air temperature sensor (intake manifold).**
**Perform "After-inspection work" of INFORMATION section.**

## 4 Inspect the sensor power supply

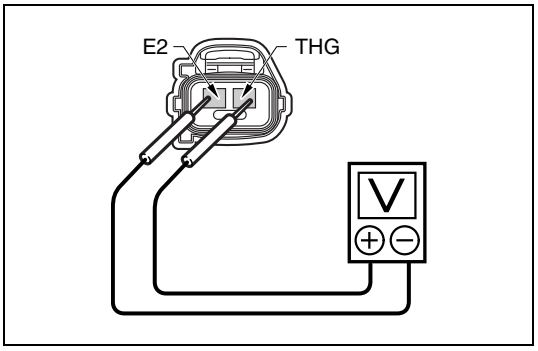


SAPH16F010300143

1. Set the starter switch to the "ON" position.
2. Use the electrical tester to measure the voltage between the terminals of the intake air temperature sensor (intake manifold) vehicle-side connector.

| Measurement conditions | Tester connections | Standard values |
|---|---|---|
| Starter switch: ON | Intake air temperature sensor (intake manifold) vehicle-side connector THG – E2 | 4.5 – 5.5 V |

**Do the measurements meet the standard value?**

**YES**

**Go to step 7.**

**NO**

**Go to step 5.**

| 5 | Inspect for short-circuit of the intake air temperature sensor (intake manifold) harness |
|---|---|

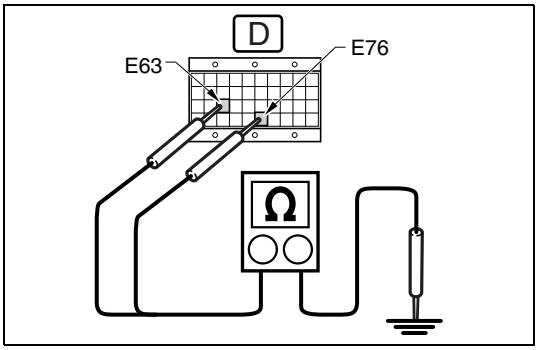

SAPH16F010300144

1. Set the starter switch to the "LOCK" position.
2. Connect the signal check harness to the engine ECU. (Do not connect the harness to the ECU.)
3. Use the electrical tester to measure the resistance between the terminals of the engine ECU (signal check harness) and ground.

| Measurement conditions | Tester connections | Standard values |
|---|---|---|
| **Starter switch: LOCK** | **Engine ECU (signal check harness) ATI+(E63) – Ground AGD2(E76) – Ground** | **∞ Ω** |

**Do the measurements meet the standard value?**

**YES**

**Go to step 6.**

**NO**

**Repair or replace the harness.**
**Perform "After-inspection work" of INFORMATION section.**

| 6 | Inspect disconnection of the intake air temperature sensor (intake manifold) harness |
|---|---|

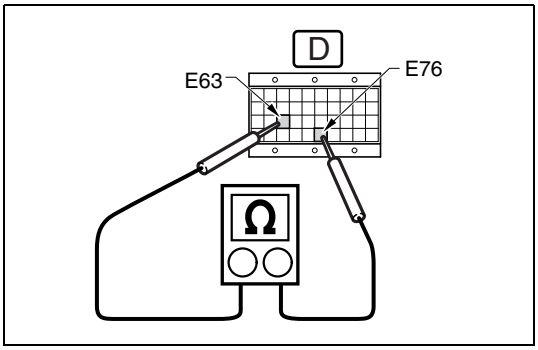

SAPH16F010300145

1. Connect the intake air temperature sensor (intake manifold) connector.
2. Use the electrical tester to measure the resistance between the terminals of the engine ECU (signal check harness).

| Measurement conditions | Tester connections | Standard values |
|---|---|---|
| **Starter switch: LOCK** | **Engine ECU (signal check harness) ATI+(E63) – AGD2(E76)** | **20 °C {68 °F}: 7.336 – 5.794 kΩ 50 °C {122 °F}: 2.435 – 1.994 kΩ** |

**Do the measurements meet the standard value?**

**YES**

**Go to step 7.**

**NO**

**Repair or replace the harness.**
**Perform "After-inspection work" of INFORMATION section.**

| 7 | Check the DTC detected (Engine ECU) [HINO DX ll ] |
|---|---|

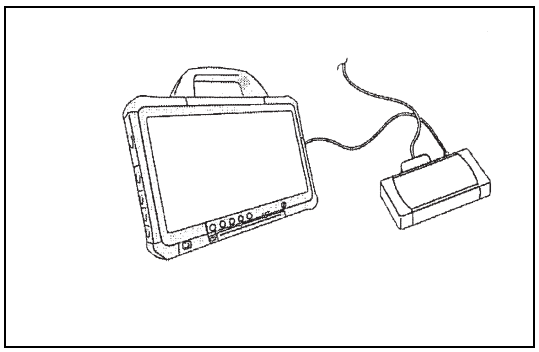

SAPH16F010300146

1. Perform engine warm-up. (engine coolant temperature: 60 °C {140 °F} or more)
2. Stop the engine and set the starter switch to the "LOCK" position.
3. Connect the vehicle to HINO DX II .
4. Set the starter switch to the "ON" position.
5. Select [Engine] and check if the DTC (P0097 or P0098) has been detected.

**Has DTC (P0097 or P0098) been detected?**

**YES**

**Replace the engine ECU.**
**Perform "After-inspection work" of INFORMATION section.**

**NO**

**Procedure completed.**
**Perform "After-inspection work" of INFORMATION section.**

# DTC: P00AF

EN01H16F01030F03001031

## P00AF: Controller error (VNT actuator CPU malfunction)

INFORMATION

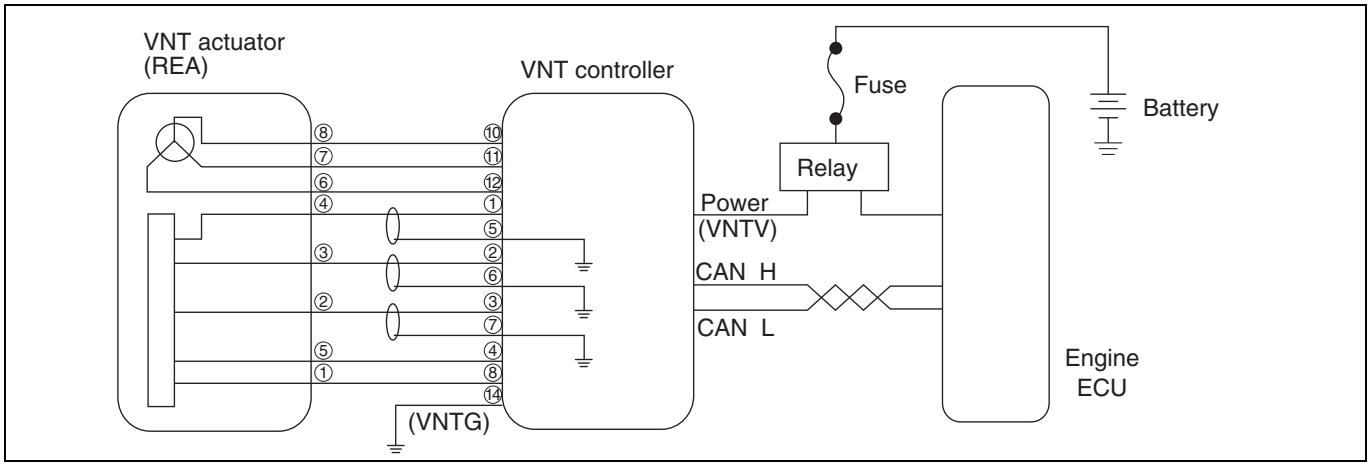


SAPH16F010300147

**1. Technical description**

- The VNT moves the nozzle vane steplessly by the REA (Rotary Electric Actuator) to control the turbo speed and boost pressure.
- The REA has a sensor to detect the movement of the actuator, always monitoring the reading and actual value of the nozzle vane opening.
- Wiping operation is performed while the engine is stopped for the purpose of removing soot and oil coming out from the range of vane operation and checking the turbo mechanical operating range for abnormality.

**<Description of malfunction>**

- –

**2. DTC set condition**

(1) DTC detection condition

- While the engine is in operation - Always
- While the engine is stopped - During wiping operation.

(2) Judgment criteria

| Item | Details (Reference) |
|---|---|
| 1. ROM failure | ROM readout data differ from previous data. |
| 2. RAM failure | RAM write data and read data do not match. |

**3. Reset condition**

- After normal operation is restored and the starter switch is turned OFF.

**4. Indication, warning or system control regulation when the DTC is set.**

- MIL: ON
- SVS light: OFF
- Engine output is restricted.
- Cruise control function is not available.
- Auxiliary brake function is not available.

**5. Symptoms on the vehicle when the DTC is set**

**<Symptoms on the vehicle due to backup control (fail safe function)>**

- Engine output is insufficient.
- Cruise control does not work.
- Auxiliary brake does not work.

**<Symptoms on the vehicle due to malfunction>**

- –

**6. Pre-inspection work**

- Check that the battery voltage is in the normal range.

**7. After-inspection work**

- Clear all past DTCs.
- Check that no DTC is detected after test drive.

**8. Estimated failure factors**

- CPU failure inside controller

## INSPECTION PROCEDURE: P00AF

| 1 | Check the DTC detected (Engine ECU) 1 [HINO DX II ] |
|---|---|

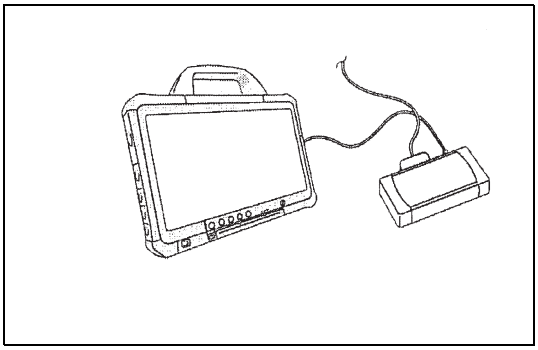

SAPH16F010300148

1. Connect the vehicle to HINO DX II .
2. Set the starter switch to the "ON" position.
3. Select [Engine] and check if any DTC other than P00AF (for example, U010C) has been detected.

**HINT**
**Due to CAN communication failures, P00AF may have been detected.**

**Has a DTC other than P00AF been detected?**

**YES**

**Go to the diagnostic procedure of a related DTC.**
**After the repair, go to step 2.**

**NO**

**Go to step 3.**

| 2 | Check the DTC detected (Engine ECU) 2 [HINO DX II ] |
|---|---|

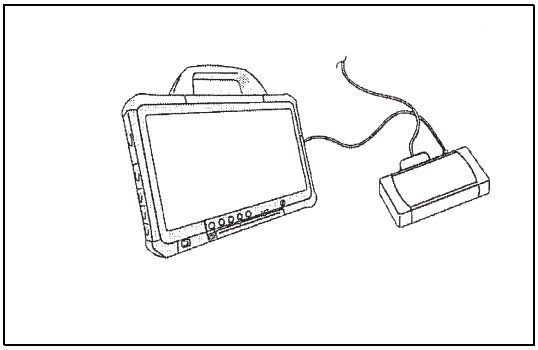

SAPH16F010300149

1. Set the starter switch to the "ON" position.
2. Select [Engine] and check if P00AF has been detected.

**Has DTC P00AF been detected?**

**YES**

**Go to step 3.**

**NO**

**Procedure completed.**
**Perform "After-inspection work" of INFORMATION section.**

| 3 | Check the operation of the VNT controller [HINO DX II ] |
|---|---|

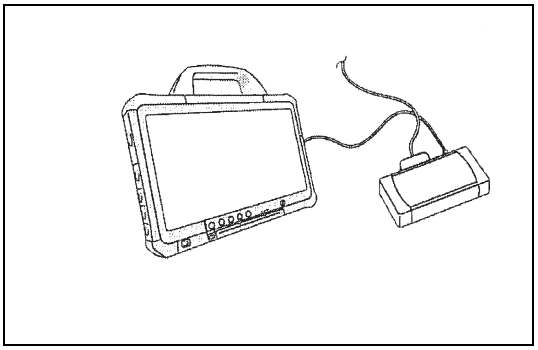

SAPH16F010300150

1. Set the starter switch to the "ON" position.
2. Erase the trouble history using HINO DX II .
3. Set the starter switch to the "LOCK" position.
4. Set the starter switch to the "ON" position again.
5. Select [Engine] and check if P00AF has been detected.

**HINT**
**Turning the starter switch OFF and ON verifies the wiping operation of the VNT actuator (DC motor).**

| Measurement conditions |
|---|
| Starter switch: LOCK → ON |

**Has DTC P00AF been detected?**

**YES**

**Replace the VNT controller.**
**Perform "After-inspection work" of INFORMATION section.**

**NO**

**Procedure completed.**
**Perform "After-inspection work" of INFORMATION section.**

# DTC: P0101

EN01H16F01030F03001032

## P0101: Air flow sensor - rationality

INFORMATION

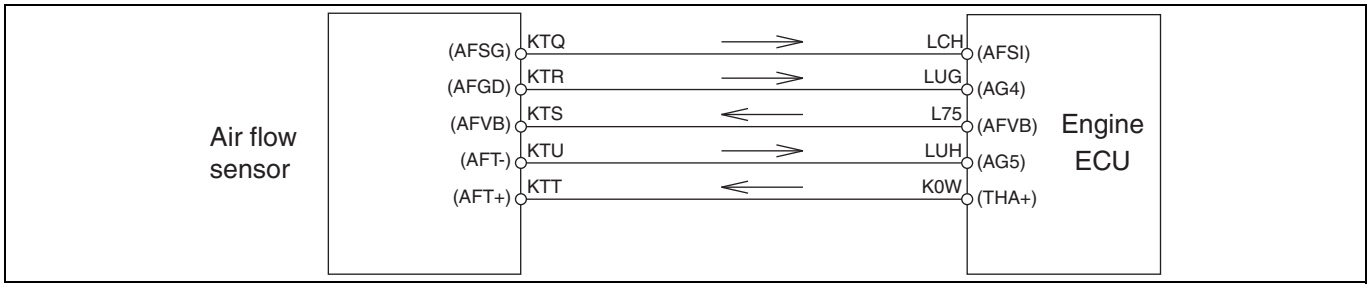


SAPH16F010300151

**1. Technical description**

- The air flow sensor mounted on the air cleaner constantly measures the intake air quantity.

**<Description of malfunction>**

- Air flow sensor value cannot be correctly recognized.

**2. DTC set condition**

(1) DTC detection condition

- Engine speed is between 720 r/min and 960 r/min.
- Engine speed variation is 234 r/min/sec or less.
- Fuel injection quantity is between 0 $mm^3$/st. cyl. sec and 80 $mm^3$/st. cyl.
- Fuel injection quantity variation is 78 $mm^3$/st. cyl sec. or less.
- Engine coolant temperature is 60 °C {140 °F} or less.
- EGR valve opening is 0 % or less (EGR-cut status)
- No other DTC is detected.

(2) Judgment criteria

- Theoretical air quantity calculated from boost pressure and atmospheric pressure and actual air quantity are compared for at least 10 seconds, and the ratio of theoretical air quantity to actual air quantity is at least 1.15 or no greater than 0.75. and:
- Difference between the DCY (Driving Cycle) value prior to the result above and the current DCY value is 0.10 or less; and
- The condition "(boost pressure - atmospheric pressure) is ≥18 kPa {2.6 psi}" when the starter switch turns off and engine is stopped after previous driving cycle is not continued for more than 3 seconds.

**3. Reset condition**

- After normal operation is restored and the starter switch is on the "LOCK" position.

**4. Indication, warning or system control regulation when the DTC is set.**

- MIL: ON
- SVS light: OFF
- Engine output is restricted.

**5. Symptoms on the vehicle when the DTC is set**

**<Symptoms on the vehicle due to backup control (fail safe function)>**

- EGR valve is fully closed.

**<Symptoms on the vehicle due to malfunction>**

- –

**6. Pre-inspection work**

- Check that the battery voltage is in the normal range.

**7. After-inspection work**

- Clear all past DTCs.
- Check that no DTC is detected after test drive.

**8. Estimated failure factors**

- Sensor is disconnected from measuring site or sensing unit is malfunctioning (due to dirt, clogging, damage, etc.)
- EGR valve malfunction
- Diesel throttle valve malfunction
- Intercooler failure (due to dirt, clogging, etc.)
- Engine ECU sensor power supply (air flow sensor dedicated 12 V power supply) failure or internal circuit failure

## INSPECTION PROCEDURE: P0101

| 1 | Inspect the air cleaner element |
|---|---|

1. Check the air cleaner element is dirty, clogged or damaged.
2. Make sure the element is a Hino genuine part.

**Was any failure found?**

**YES**

**Clean or replace the air cleaner element. Perform "After-inspection work" of INFORMATION section.**

**NO**

**Go to step 2.**

| 2 | Check the intake system |
|---|---|

1. Check the intake hose and verify that there are no disconnections, clogging, punctures, or cracks.
2. Check the breather hose and verify that there are no disconnections, clogging, punctures, or cracks.
3. Check the intercooler hose and verify that there are no disconnections, clogging, punctures, or cracks.

**Was any failure found?**

**YES**

**Repair or replace the intake system hoses. Perform "After-inspection work" of INFORMATION section.**

**NO**

**Go to step 3.**

| 3 | Inspect the air flow sensor |
|---|---|

1. Check the installation of the air flow sensor.
2. Make sure there is no dirt or damage to the air flow sensor.

**Was any failure found?**

**YES**

**If dirt, clogging or damage was found in sensing unit, replace the air flow sensor.**
**Perform "After-inspection work" of INFORMATION section.**

**NO**

**Go to step 4.**

| 4 | Inspect for short-circuits in wire harness of air flow sensor |
|---|---|

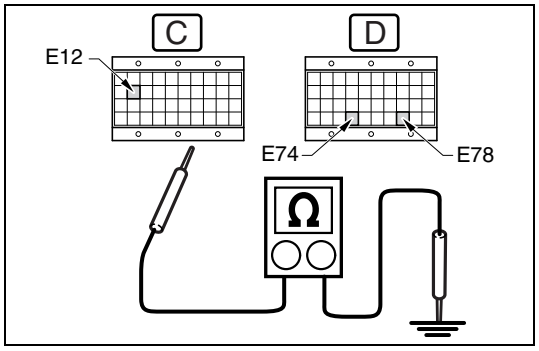

SAPH16F010300152

1. Set the starter switch to the "LOCK" position.
2. Disconnect the air flow sensor connector.
3. Connect the signal check harness to the engine ECU vehicle-side harness. (Do not connect harness to the ECU.)
4. Use the electrical tester to measure the resistance between the engine ECU (signal check harness) terminals and ground.

| Measurement conditions | Tester connections | Standard values |
|---|---|---|
| **Starter switch: LOCK** | **Engine ECU (signal check harness) AFVB(E12) – Ground**<br>**AFSI(E74) – Ground**<br>**AG4(E78) – Ground** | ∞ Ω |

**Do the measurements meet the standard value?**

**YES**

**Go to step 5.**

**NO**

**Repair or replace the harness.**
**Perform "After-inspection work" of INFORMATION section.**

| 5 | Inspect for disconnection in wire harness of air flow sensor |
|---|---|

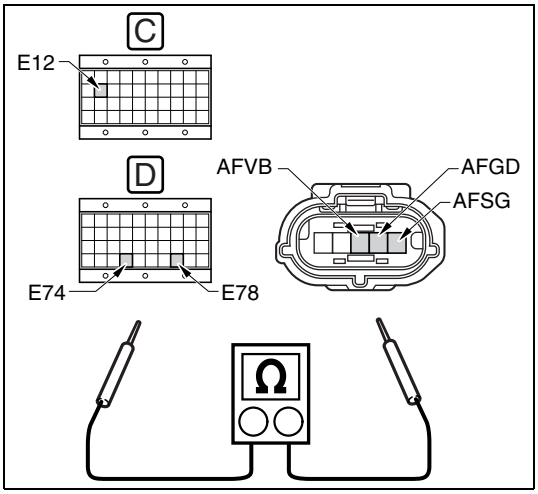

SAPH16F010300153

1. Use the electrical tester to measure the resistance between the engine ECU (signal check harness) terminal and the air flow sensor vehicle-side connector terminal.

| Measurement conditions | Tester connections | Standard values |
|---|---|---|
| **Starter switch: LOCK** | **Engine ECU (signal check harness) – air flow sensor vehicle-side connector<br>AFVB(E12) – AFVB<br>AFSI(E74) – AFSG<br>AG4(E78) – AFGD** | **1 Ω or less** |

**Do the measurements meet the standard value?**

**YES**

**Go to step 6.**

**NO**

**Repair or replace the harness.**
**Perform "After-inspection work" of INFORMATION section.**

| 6 | Inspect the EGR valve |
|---|---|

1. Check the EGR valve for damage due to foreign substances.
2. Check if there is soot obstructing the exhaust gas passageway inlet or outlet.

**Was any failure found?**

**YES**

**Remove foreign substances and clean the valve.**
**Replace the EGR valve if it is damaged.**
**Perform "After-inspection work" of INFORMATION section.**

**NO**

**Go to step 7.**

| 7 | Check the response delay of the EGR valve [HINO DX II ] |
|---|---|

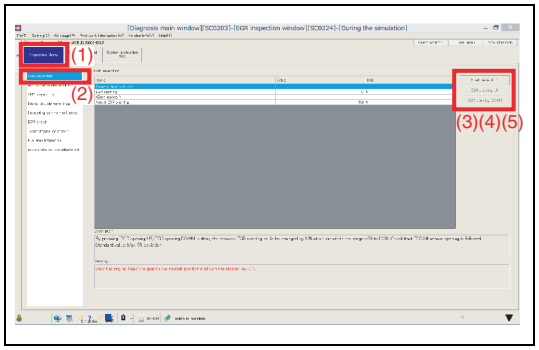


SAPH16F010300154

1. Set the starter switch to the "LOCK" position.
2. Connect the vehicle to HINO DX II .
3. Set the starter switch to ON position and select [Engine] on the screen of HINO DX II .
4. Check the time lag (following characteristics) of the target EGR valve opening and actual EGR valve opening.

**⚠ CAUTION**
**Perform the inspection while the engine is stopped to avoid engine damages.**

<Inspection procedure>
(1) Select [Inspection Menu].
(2) Select [EGR inspection].
(3) Click [Start inspection].
(4) Click [EGR opening UP]:
• Check each step from 0 % – 90 % of the time lag (following characteristics) of the target EGR valve opening and actual EGR valve opening.
(5) Click [EGR opening DOWN]:
• Check each step from 90 % – 0 % of the time lag (following characteristics) of the target EGR valve opening and actual EGR valve opening.

**HINT**
**In EGR openings from 0 % – 90 %, 1 step corresponds to a 10 % change.**

| Standard values |
|---|
| The response delay should be less than 5 seconds. |

**Do the measurements meet the standard value?**

| YES | NO |
|---|---|
| Go to step 8. | Replace the EGR valve.<br>Perform "After-inspection work" of INFORMATION section. |

| 8 | Inspect the diesel throttle valve |
|---|---|

1. Stop the engine.
2. Check the operating status of the diesel throttle valve (for incorrect opening or sticky valve).

**Was any failure found?**

YES

**Replace the diesel throttle valve.**
**Perform "After-inspection work" of INFORMATION section.**

NO

**Go to step 9.**

| 9 | **Inspect the intercooler** |
|---|---|

1. Check if there is an obstruction due to clogging inside the intercooler.

**Was any failure found?**

YES

**Remove foreign substances and clean the intercooler.**
**Replace the intercooler if it is damaged.**
**Perform "After-inspection work" of INFORMATION section.**

NO

**Go to step 10.**

| 10 | **Check the DTC detected (Engine ECU) [HINO DX II ]** |
|---|---|

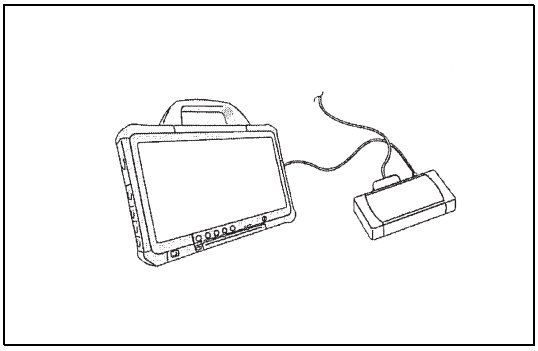

SAPH16F010300155

1. Warm-up the engine. (engine coolant temperature: 60 °C {140 °F} or more)
2. Stop the engine.
3. Set the starter switch to the "ON" position.
4. Select [Engine] and check if P0101 has been detected.

**Has DTC P0101 been detected?**

YES

**Replace the engine ECU.**
**Perform "After-inspection work" of INFORMATION section.**

NO

**Procedure completed.**
**Perform "After-inspection work" of INFORMATION section.**

# DTC: P0104

EN01H16F01030F03001033

## P0104: Air flow sensor - out of range

INFORMATION

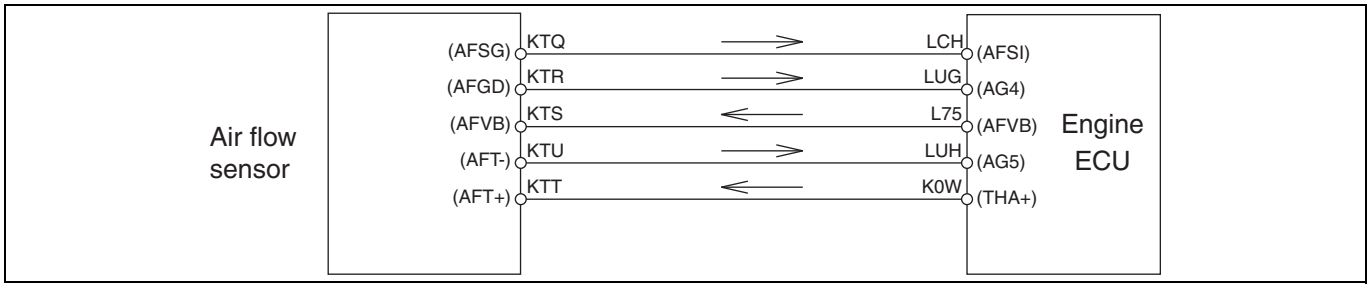


SAPH16F010300156

**1. Technical description**

- The air flow sensor installed to the air cleaner consistently measures an intake air volume.

**<Description of malfunction>**

- The air flow sensor value cannot be correctly recognized.

**2. DTC set condition**

(1) Check conditions

- Starter switch ON.
- Battery voltage is in the range of 10 V to 16 V.
- Engine speed is at least 725 r/min
- The conditions described above remain for 5 seconds or longer.

(2) Judgment criteria

- Output of the air flow sensor remains less than 2.0 kHz (3.9 kg/h) for 3 seconds or longer.

**3. Reset condition**

- After normal operation is restored and the starter switch is turned LOCK.

**4. Indication, warning or system control regulation when the DTC is set.**

- MIL: ON
- SVS light: OFF
- Engine output is restricted

**5. Symptoms on the vehicle when the DTC is set**

**<Symptoms on the vehicle due to backup control (fail safe function)>**

- Engine output is insufficient.

**<Symptoms on the vehicle due to malfunction>**

- –

**6. Pre-inspection work**

- Check that the battery voltage is in the normal range.

**7. After-inspection work**

- Clear all past DTCs.
- Check that no DTC is stored after test drive.

**8. Estimated failure factors**

- Sensor disconnected from the measured part or sensing unit malfunctioning (due to dirt, clogging, damage, etc.
- Engine ECU sensor power supply (air flow sensor dedicated 12 V power supply) malfunction or internal circuit malfunction
- Sensor harness disconnection, short-circuit
- Poor connector contact or faulty connector fit
- Sensor harness high frequency noise

## INSPECTION PROCEDURE: P0104

| 1 | Check the DTC detected (Engine ECU) 1 [HINO DX II ] |
|---|---|

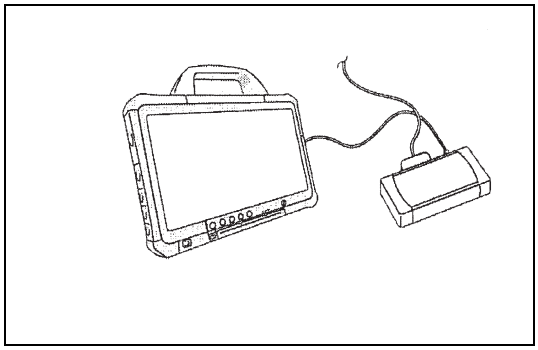

SAPH16F010300157

1. Set the starter switch to the "LOCK" position.
2. Connect the vehicle to HINO DX II .
3. Set the starter switch to the "ON" position.
4. Select [Engine] and check if any DTC other than P0104 (for example, P0642,P0643,P0652,P0653) has been detected.

**HINT**
**Due to sensor power supply failures, P0104 may have been detected.**
**First perform the diagnostic related to the sensor power supply.**

**Has a DTC other than P0104 been detected?**

| YES | NO |
|---|---|
| Go to the diagnostic procedure of a related DTC. | Go to step 2. |

| 2 | Inspect the air flow sensor connector |
|---|---|

1. Check the connection of the air flow sensor connector (Looseness and poor contact).

**Was any failure found?**

| YES | NO |
|---|---|
| Connect securely, repair if needed. Perform "After-inspection work" of INFORMATION section. | Go to step 3. |

| 3 | Inspect the air flow sensor |
|---|---|

1. Check the installation of the air flow sensor.
2. Make sure there is no dirt or damage to the air flow sensor.

**Was any failure found?**

YES

**If dirt, clogging or damage was found in sensing unit, replace the air flow sensor. Perform "After-inspection work" of INFORMATION section.**

NO

**Go to step 4.**

| 4 | Inspect for short-circuit of the air flow sensor harness |
|---|---|

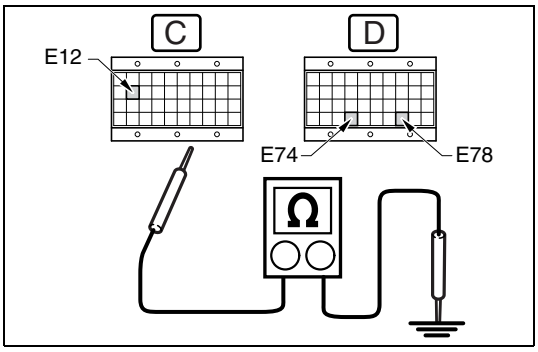

SAPH16F010300158

1. Set the starter switch to the "LOCK" position.
2. Connect the signal check harness to the engine ECU vehicle-side harness. (Do not connect the harness to the ECU.)
3. Disconnect the air flow sensor connector.
4. Use the electrical tester to measure the resistance between the terminals of the engine ECU (signal check harness) and ground.

| Measurement conditions | Tester connections | Standard values |
|---|---|---|
| **Starter switch: LOCK** | **Engine ECU (signal check harness) AFSI(E74) – Ground AG4(E78) – Ground AFVB(E12) – Ground** | ∞ Ω |

**Do the measurements meet the standard value?**

YES

**Go to step 5.**

NO

**Repair or replace the harness. Perform "After-inspection work" of INFORMATION section.**

## 5 Inspect disconnection of the air flow sensor harness

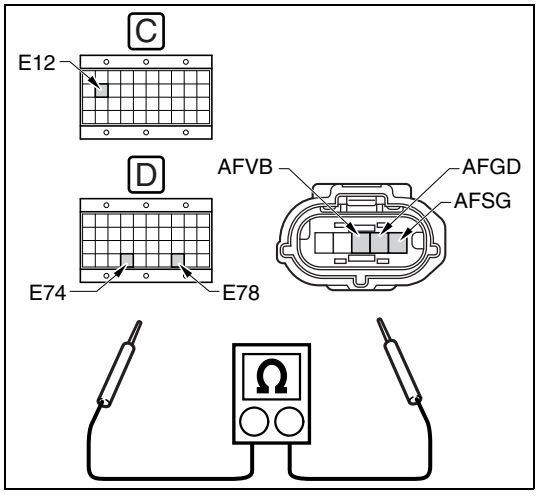

SAPH16F010300159

1. Use the electrical tester to measure the resistance between the terminals of the engine ECU (signal check harness) and air flow sensor vehicle-side connector.

| Measurement conditions | Tester connections | Standard values |
|---|---|---|
| Starter switch: LOCK | Engine ECU (signal check harness) – Air flow sensor vehicle-side connector<br>AFSI(E74) – AFSG<br>AG4(E78) – AFGD<br>AFVB(E12) – AFVB | 1 Ω or less |

**Do the measurements meet the standard value?**

**YES**

**Go to step 6.**

**NO**

**Repair or replace the harness.**
**Perform "After-inspection work" of INFORMATION section.**

## 6 Inspect the air flow sensor power supply

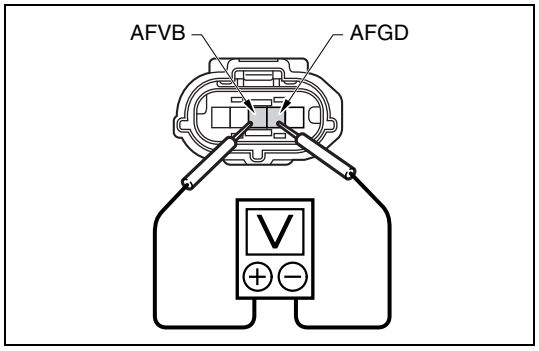

SAPH16F010300160

1. Connect the signal check harness to the engine ECU.
2. Set the starter switch to the "ON" position.
3. Use the electrical tester to measure the voltage between the terminals of the air flow sensor vehicle-side connector.

| Measurement conditions | Tester connections | Standard values |
|---|---|---|
| Starter switch: ON | Air flow sensor vehicle-side connector<br>AFVB – AFGD | 4.5 – 5.5 V |

**Do the measurements meet the standard value?**

**YES**

**Go to step 7.**

**NO**

**Replace the engine ECU.**
**Perform "After-inspection work" of INFORMATION section.**

## 7 Inspect the air flow sensor signal

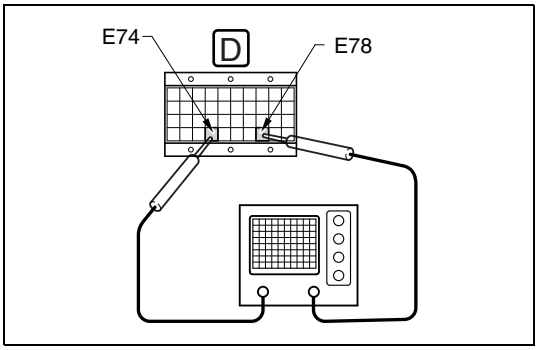


SAPH16F010300161

1. Set the starter switch to the "LOCK" position.
2. Connect the air flow sensor connector.
3. Start the engine.
4. Use the oscilloscope to measure the signal voltage between the terminals in the engine ECU (signal check harness).

| Measurement conditions | Tester connections | Standard values |
|---|---|---|
| **After engine warm-up, with engine idling** | **Engine ECU (signal check harness) AFSI(E74) – AG4(E78)** | **5 – 6 kHz** |

**Do the measurements meet the standard value?**

**YES**

**Go to step 8.**

**NO**

**Replace the air flow sensor.**
**Perform "After-inspection work" of INFORMATION section.**

## 8 Check the DTC detected (Engine ECU) 2 [HINO DX II ]

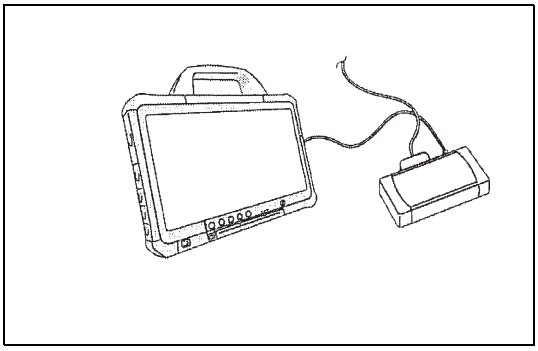

SAPH16F010300162

1. Perform engine warm-up. (engine coolant temperature: 60 °C {140 °F} or more)
2. Stop the engine and set the starter switch to the "ON" position.
3. Select [Engine] and check if P0104 has been detected.

**Has DTC P0104 been detected?**

**YES**

**Replace the engine ECU.**
**Perform "After-inspection work" of INFORMATION section.**

**NO**

**Procedure completed.**
**Perform "After-inspection work" of INFORMATION section.**

# DTC: P0106

EN01H16F01030F03001034

## P0106: Boost pressure sensor - rationality

INFORMATION

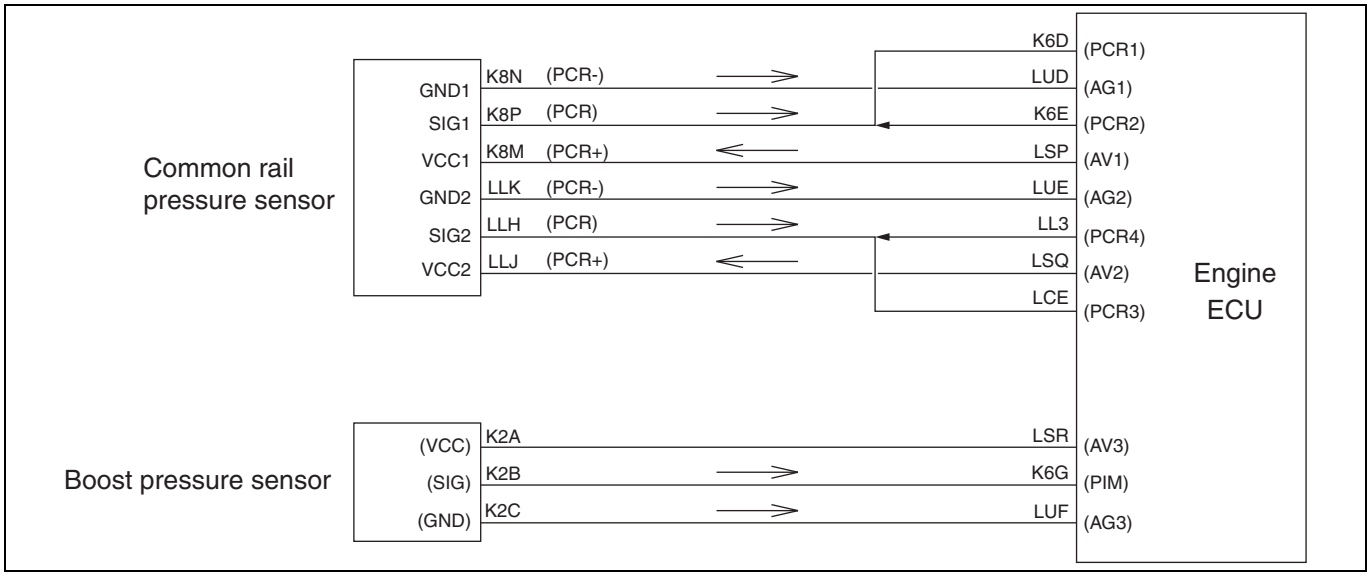


SAPH16F010300163

**1. Technical description**

- The boost pressure sensor mounted on the diesel throttle outlet constantly measures the boost pressure.

**<Description of malfunction>**

- Boost pressure cannot be correctly recognized.

**2. DTC set condition**

(1) DTC detection condition

- Engine speed is between 720 r/min and 960 r/min.
- Engine speed variation is 234 r/min or less.
- Fuel injection quantity is between 0 $mm^3$/st. cyl and 80 $mm^3$/st. cyl.
- Fuel injection quantity variation is 78 $mm^3$/st. cyl or less.
- Engine coolant temperature is 60 °C {140 °F} or less.
- EGR valve opening is 0 % or less (EGR-cut status)
- No other DTC is detected.

(2) Judgment criteria

- Theoretical air quantity calculated from boost pressure and atmospheric pressure and actual air quantity are compared for at least 10 seconds, and the ratio of theoretical air quantity to actual air quantity is at least 1.15 or no greater than 0.75; and:
- Difference between the DCY (Driving Cycle) value prior to the result above and the current DCY value is 0.10 or less; and
- The condition "(boost pressure - atmospheric pressure) was ≥18 kPa {2.6 psi}" when the starter switch turned off and engine was stopped after previous driving cycle is not continued for more than 3 seconds.

**3. Reset condition**

- After normal operation is restored and the starter switch is on the "LOCK" position.

**4. Indication, warning or system control regulation when the DTC is set.**

- MIL: ON
- SVS light: OFF
- Engine output is restricted.

**5. Symptoms on the vehicle when the DTC is set**

**<Symptoms on the vehicle due to backup control (fail safe function)>**

- Engine output is insufficient.
- EGR valve is fully closed.
- DPR filter auto regeneration control is stopped.

**<Symptoms on the vehicle due to malfunction>**

- Engine output is insufficient.

**6. Pre-inspection work**

- Check that the battery voltage is in the normal range.

**7. After-inspection work**

- Clear all past DTCs.
- Check that no DTC is detected after test drive.

**8. Estimated failure factors**

- Sensor is disconnected from measuring site or sensing unit is malfunctioning (due to dirt, clogging, damage, etc.)
- Abnormal sensor resistance (stuck sensor)
- Engine ECU sensor power supply failure, internal circuit failure

## INSPECTION PROCEDURE: P0106

| 1 | Inspect the boost pressure sensor connector |
|---|---|

1. Check the connection of the boost pressure sensor connector (Looseness and poor contact).

**Was any failure found?**

**YES**

**Connect securely, repair if needed.**
**Perform "After-inspection work" of INFORMATION section.**

**NO**

**Go to step 2.**

| 2 | Inspect the boost pressure sensor |
|---|---|

1. Check the installation of the boost pressure sensor.
2. Make sure there is no dirt or damage to the boost pressure sensor.
3. Make sure there is no dirt, damage or clogging in the pipes or hoses unit of the boost pressure sensor.

**Was any failure found?**

**YES**

**If dirt, clogging or damage was found in sensing unit, replace the boost pressure sensor.**
**Perform "After-inspection work" of INFORMATION section.**

**NO**

**Go to step 3.**

| 3 | Check the boost pressure sensor output signal [HINO DX II ] |
|---|---|

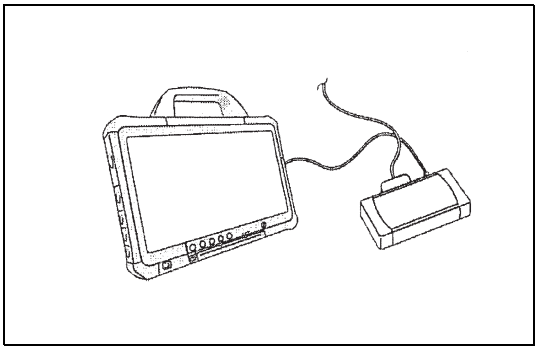

SAPH16F010300164

1. Set the starter switch to the "LOCK" position.
2. Connect the vehicle to HINO DX II .
3. Start the engine.
4. Select [Engine] from the menu.
5. Select [Actual boost pressure] from the [Data monitor Setting] menu.
6. Race the engine from idle to NMR and verify that the boost pressure output signal varies.

| Standard values |
|---|
| **There is no abnormal change in the sensor output signal. (The pressure sensor signal response changes according to the engine speed)** |

**Was there no abnormal change in the sensor output signal?**

**YES**

**Go to step 7.**

**NO**

**Replace the boost pressure sensor.**
**Perform "After-inspection work" of INFORMATION section.**
**Go to step 4.**

| 4 | Inspect for short-circuits in wire harness of boost pressure sensor |
|---|---|

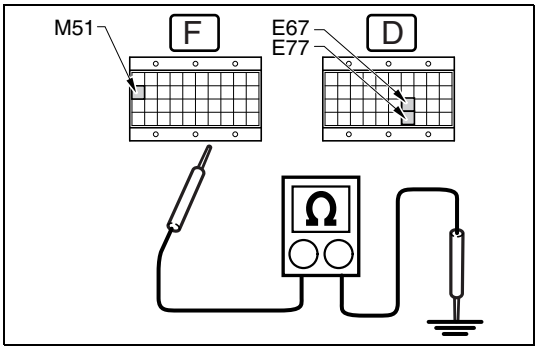


SAPH16F010300165

1. Set the starter switch to the "LOCK" position.
2. Disconnect the boost pressure sensor connector.
3. Connect the signal check harness to the engine ECU vehicle-side harness. (Do not connect harness to the ECU.)
4. Use the electrical tester to measure the resistance between each terminal in the engine ECU (signal check harness) and ground.

| Measurement conditions | Tester connections | Standard values |
|---|---|---|
| **Starter switch: LOCK** | **Engine ECU (signal check harness) AV3(M51) – Ground PIM(E67) – Ground AG3(E77) – Ground** | **∞ Ω** |

**Do the measurements meet the standard value?**

**YES**

**Go to step 5.**

**NO**

**Repair or replace the harness.**
**Perform "After-inspection work" of INFORMATION section.**

## 5 Inspect for disconnection in wire harness of boost pressure sensor

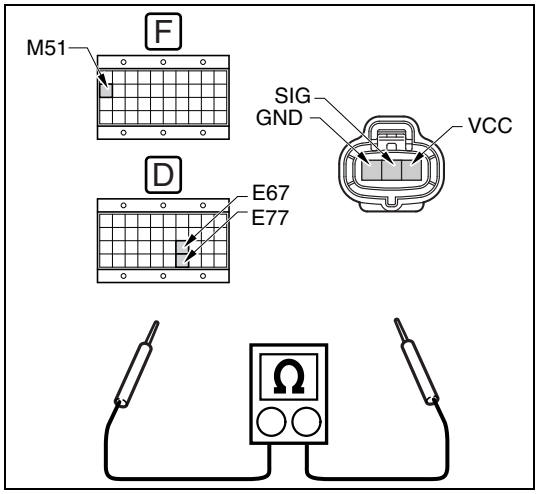


SAPH16F010300166

1. Use the electrical tester to measure the resistance between the engine ECU (signal check harness) and boost pressure sensor vehicle-side connector terminals.

| Measurement conditions | Tester connections | Standard values |
|---|---|---|
| Starter switch: LOCK | Engine ECU (signal check harness) – boost pressure sensor vehicle-side connector<br>AV3(M51) – VCC<br>PIM(E67) – SIG<br>AG3(E77) – GND | 1 Ω |

**Do the measurements meet the standard value?**

**YES**

**Go to step 6.**

**NO**

**Repair or replace the harness.**
**Perform "After-inspection work" of INFORMATION section.**

## 6 Inspect the boost pressure sensor power supply

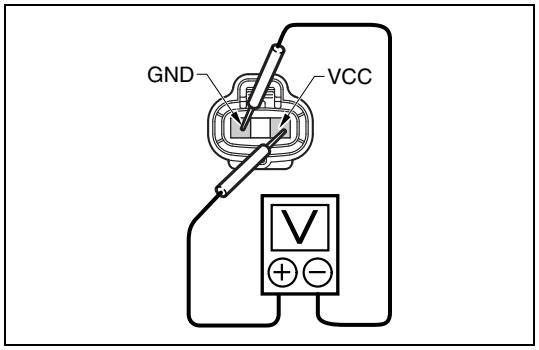


SAPH16F010300167

1. Connect the engine ECU vehicle-side harness to the engine ECU.
2. Set the starter switch to the "ON" position.
3. Use the electrical tester to measure the voltage between the terminals of the boost pressure sensor vehicle-side connector.

| Measurement conditions | Tester connections | Standard values |
|---|---|---|
| Starter switch: ON | Boost pressure sensor vehicle-side connector<br>VCC – GND | 4.5 – 5.5 V |

**Do the measurements meet the standard value?**

**YES**

**Replace the boost pressure sensor.**
**Go to step 7 after replacement.**

**NO**

**Replace the engine ECU.**
**Perform "After-inspection work" of INFORMATION section.**

## 7 Check the DTC detected (Engine ECU) [HINO DX II ]

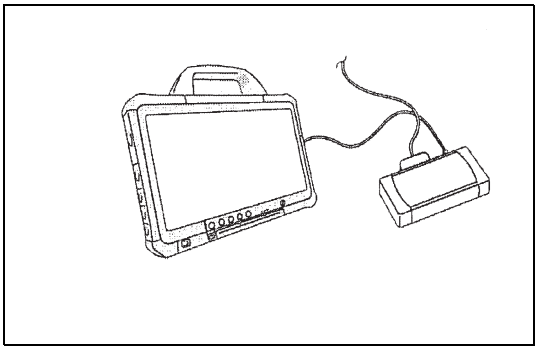

SAPH16F010300168

1. Warm-up the engine (engine coolant temperature: 60 °C {140 °F} or more)
2. Stop the engine.
3. Set the starter switch to the "ON" position.
4. Select [Engine] and check if P0106 has been detected.

**Has DTC P0106 been detected?**

**YES**

**Replace the engine ECU.**
**Perform "After-inspection work" of INFORMATION section.**

**NO**

**Procedure completed.**
**Perform "After-inspection work" of INFORMATION section.**

# DTC: P0107

EN01H16F01030F03001035

## P0107: Boost pressure sensor - out of range (Out of range low)

INFORMATION

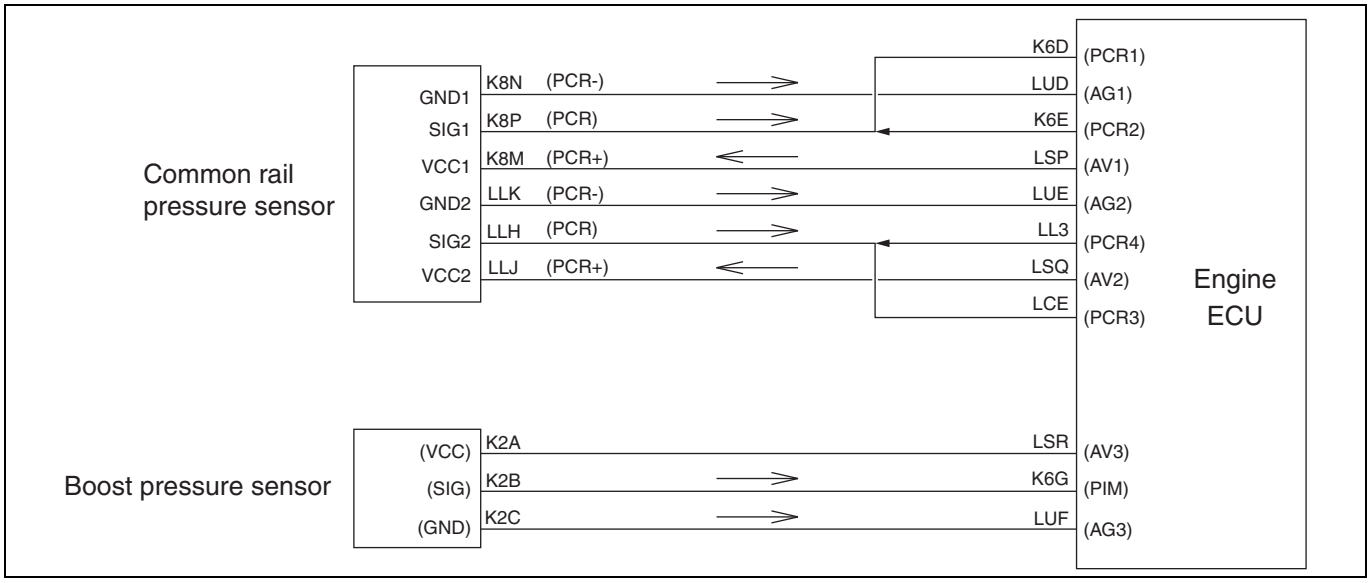


SAPH16F010300169

**1. Technical description**

- The boost pressure sensor install in the outlet of the intake throttle consistently detects boost pressure.

**<Description of malfunction>**

- Boost pressure cannot be correctly recognized.

**2. DTC set condition**

(1) DTC detection condition

- Starter switch ON.
- Battery voltage is in the range of 10 V to 16 V.

The conditions described above remain for 5 seconds or longer.

(2) Judgment criteria

- Output of the sensor remains at 0.3 V (32.4 kPa {4.7 psi}) or less for 3 seconds or longer.

**3. Reset condition**

- After normal operation is restored and the starter switch is on the "LOCK" position.

**4. Indication, warning or system control regulation when the DTC is set.**

- MIL: ON
- SVS light: OFF
- Engine output is restricted.
- Cruise control function is not available.

**5. Symptoms on the vehicle when the DTC is set**

**<Symptoms on the vehicle due to backup control (fail safe function)>**

- Engine output is insufficient.
- Cruise control does not work.

**<Symptoms on the vehicle due to malfunction>**

- –

**6. Pre-inspection work**

- Check that the battery voltage is in the normal range.

**7. After-inspection work**

- Clear all past DTCs.
- Check that no DTC is stored after test drive.

**8. Estimated failure factors**

- Abnormal resistance of sensor
- Disconnection or short-circuit in sensor harness
- Failure in engine ECU sensor power supply or internal circuit
- Looseness or poor contact of connector

## INSPECTION PROCEDURE: P0107

| 1 | Inspect the boost pressure sensor connector |
|---|---|

1. Check the connection of the boost pressure sensor connector (Looseness and poor contact).

**Was any failure found?**

**YES**

**Connect securely, repair if needed.**
**Perform "After-inspection work" of INFORMATION section.**

**NO**

**Go to step 2.**

| 2 | Inspect the boost pressure sensor |
|---|---|

1. Check the installation of the boost pressure sensor.
2. Make sure there is no dirt or damage to the boost pressure sensor.

**Was any failure found?**

**YES**

**Clean the boost pressure sensor and install it properly.**
**If damaged, replace the boost pressure sensor.**
**Perform "After-inspection work" of INFORMATION section.**

**NO**

**Go to step 3.**

## 3 Inspect the boost pressure sensor unit

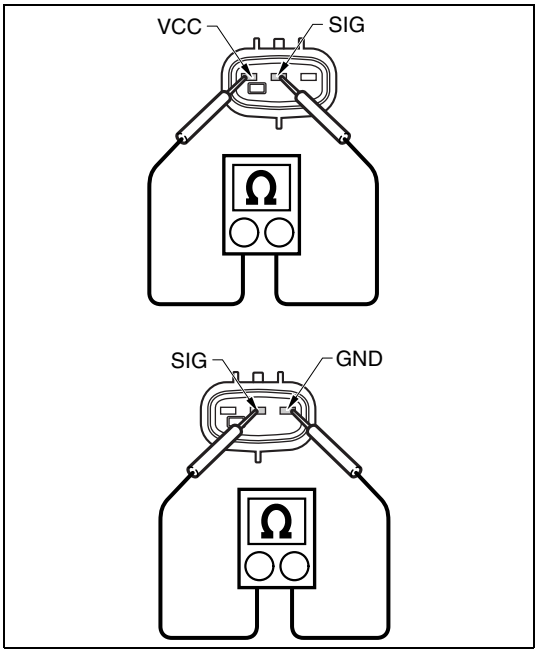


SAPH16F010300170

1. Set the starter switch to the "LOCK" position.
2. Disconnect the boost pressure sensor connector.
3. Use the electrical tester to measure the resistance between the terminals of the boost pressure sensor.

| Measurement conditions | Tester connections | Standard values |
|---|---|---|
| Starter switch: LOCK | Boost pressure sensor VCC – SIG SIG – GND | 2 – 15 kΩ |

**Do the measurements meet the standard value?**

**YES**

**Go to step 4.**

**NO**

**Replace the boost pressure sensor. Perform "After-inspection work" of INFORMATION section.**

## 4 Inspect the boost pressure sensor power supply

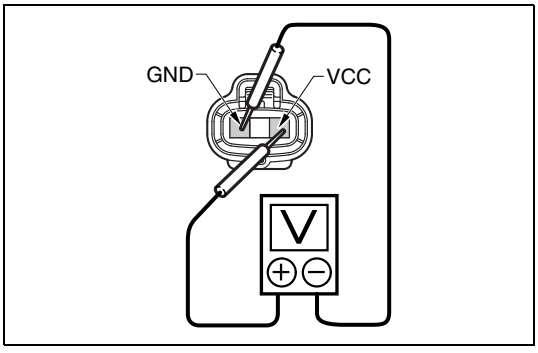


SAPH16F010300171

1. Set the starter switch to the "ON" position.
2. Use the electrical tester to measure the voltage between the terminals of the boost pressure sensor vehicle-side connector.

| Measurement conditions | Tester connections | Standard values |
|---|---|---|
| Starter switch: ON | Boost pressure sensor vehicle-side connector VCC – GND | 4.5 – 5.5 V |

**Do the measurements meet the standard value?**

**YES**

**Go to step 5.**

**NO**

**Go to step 6.**

## 5 Inspect the boost pressure sensor signal circuit

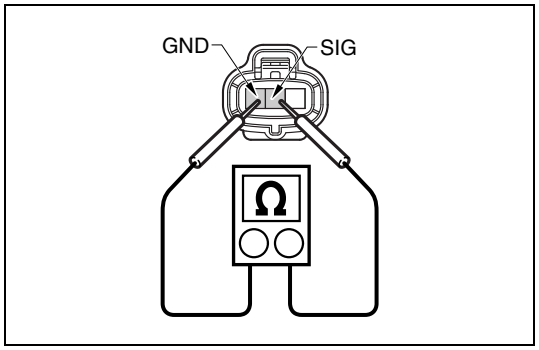


SAPH16F010300172

1. Set the starter switch to the "LOCK" position.
2. Use the electrical tester to measure the resistance between the terminals of the boost pressure sensor vehicle-side connector.

| Measurement conditions | Tester connections | Standard values |
|---|---|---|
| Starter switch: LOCK | Boost pressure sensor vehicle-side connector SIG – GND | 209 – 231 Ω |

**Do the measurements meet the standard value?**

**YES**

**Go to step 8.**

**NO**

**Go to step 6.**

## 6 Inspect for short-circuit of the boost pressure sensor harness

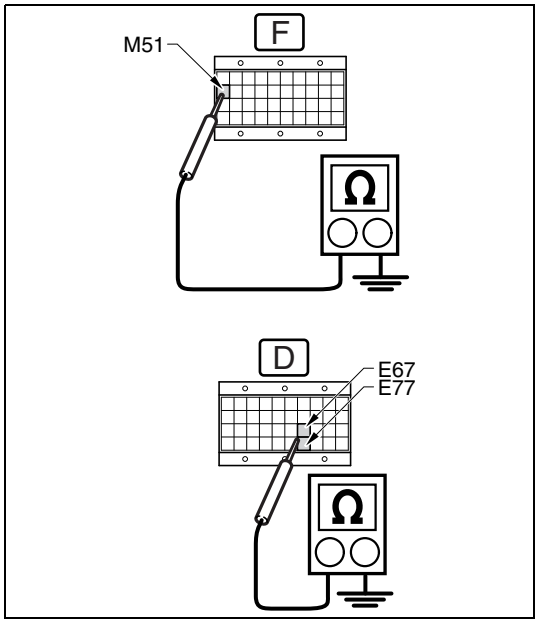


SAPH16F010300173

1. Connect the signal check harness to the engine ECU vehicle-side harness. (Do not connect the harness to the ECU.)
2. Use the electrical tester to measure the resistance between the terminals of the engine ECU (signal check harness) and ground.

| Measurement conditions | Tester connections | Standard values |
|---|---|---|
| Starter switch: LOCK | Engine ECU (signal check harness) AV3(M51) – Ground PIM(E67) – Ground AG3(E77) – Ground | ∞ Ω |

**Do the measurements meet the standard value?**

**YES**

**Go to step 7.**

**NO**

**Repair or replace the harness.**
**Perform "After-inspection work" of INFORMATION section.**

| 7 | Inspect disconnection of the boost pressure sensor harness |
|---|---|

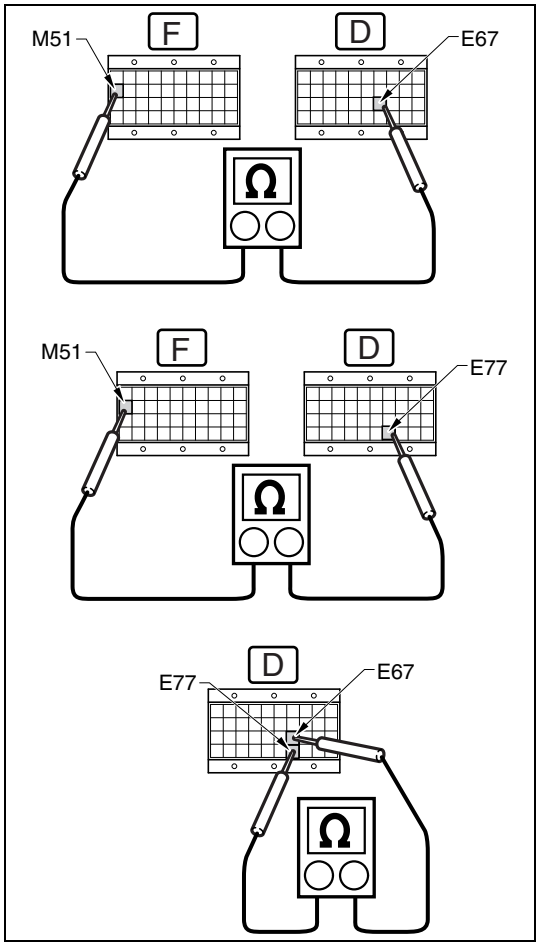


SAPH16F010300174

1. Connect the boost pressure sensor connector.
2. Use the electrical tester to measure the resistance between the terminals of the engine ECU (signal check harness).

| Measurement conditions | Tester connections | Standard values |
|---|---|---|
| **Starter switch: LOCK** | **Engine ECU (signal check harness)<br>(1) AV3(M51) – PIM(E67)<br>(2) AV3(M51) – AG3(E77)<br>(3) PIM(E67) – AG3(E77)** | **(1) 2 – 15 kΩ<br>(2) 2 – 15 kΩ<br>(3) ∞ Ω** |

**Do the measurements meet the standard value?**

**YES**

**Go to step 8.**

**NO**

**Repair or replace the harness.**
**Perform "After-inspection work" of INFORMATION section.**

| 8 | Check the DTC detected (Engine ECU) [HINO DX ll ] |
|---|---|

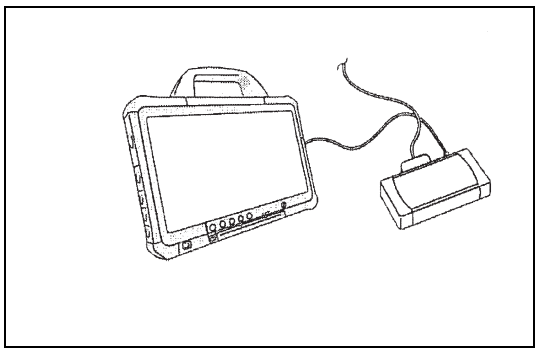

SAPH16F010300175

1. Perform engine warm-up. (engine coolant temperature: 60 °C {140 °F} or more)
2. Stop the engine and set the starter switch to the "LOCK" position.
3. Connect the vehicle to HINO DX II .
4. Set the starter switch to the "ON" position.
5. Select [Engine] and check if P0107 has been detected.

**Has DTC P0107 been detected?**

**YES**

**Replace the engine ECU.**
**Perform "After-inspection work" of INFORMATION section.**

**NO**

**Procedure completed.**
**Perform "After-inspection work" of INFORMATION section.**

# DTC: P0108

EN01H16F01030F03001036

## P0108: Boost pressure sensor - out of range (Out of range high)

INFORMATION

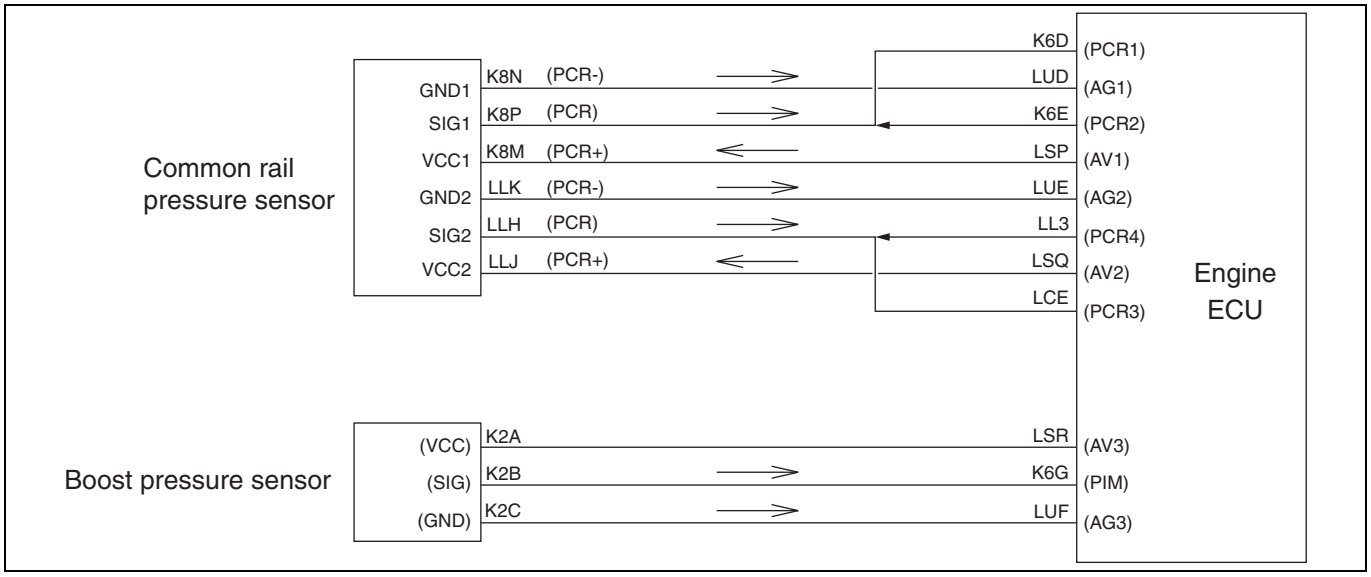


SAPH16F010300176

**1. Technical description**

- The boost pressure sensor installed at the outlet of the Diesel throttle (intake throttle valve) consistently measures boost pressure.

**<Description of malfunction>**

- The boost pressure cannot be correctly recognized.

**2. DTC set condition**

(1) DTC detection condition

- Starter switch ON.
- Battery voltage is in the range of 10 V to 16 V.

The conditions described above remain for 5 seconds or longer.

(2) Judgment criteria

- Output of the boost pressure sensor remains greater than 3.67 V (327.4 kPa {47.5 psi}) for 3 seconds or longer.

**3. Reset condition**

- After normal operation is restored and the starter switch is turned OFF.

**4. Indication, warning or system control regulation when the DTC is set.**

- MIL: ON
- SVS light: OFF
- Engine output is restricted.
- Cruise control function is not available.

**5. Symptoms on the vehicle when the DTC is set**

**<Symptoms on the vehicle due to backup control (fail safe function)>**

- Engine output is insufficient.
- Cruise control does not work.

**<Symptoms on the vehicle due to malfunction>**

- –

**6. Pre-inspection work**

- Check that the battery voltage is in the normal range.

**7. After-inspection work**

- Clear all past DTCs.
- Check that no DTC is stored after test drive.

**8. Estimated failure factors**

- Abnormality in resistance of sensor
- Failure in engine ECU internal circuit
- Short-circuit in sensor power supply harness
- Internal sensor short-circuit

## INSPECTION PROCEDURE: P0108

**1 Inspect the boost pressure sensor connector**

1. Check the connection of the boost pressure sensor connector (Looseness and poor contact).

**Was any failure found?**

**YES**

**Connect securely, repair if needed.**
**Perform "After-inspection work" of INFORMATION section.**

**NO**

**Go to step 2.**

**2 Inspect the boost pressure sensor**

1. Check the installation of the boost pressure sensor.
2. Make sure there is no dirt or damage to the boost pressure sensor.

**Was any failure found?**

**YES**

**If dirt, clogging or damage was found in sensing unit, replace the boost pressure sensor.**
**Perform "After-inspection work" of INFORMATION section.**

**NO**

**Go to step 3.**

**3 Inspect the boost pressure sensor unit**

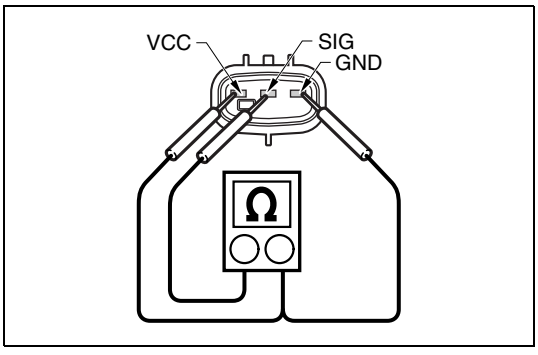


SAPH16F010300177

1. Set the starter switch to the "LOCK" position.
2. Disconnect the boost pressure sensor connector.
3. Use the electrical tester to measure the resistance between the terminals of the boost pressure sensor.

| Measurement conditions | Tester connections | Standard values |
|---|---|---|
| **Starter switch: LOCK** | **Boost pressure sensor VCC – SIG GND – SIG** | **2 – 15 kΩ** |

**Do the measurements meet the standard value?**

YES

**Go to step 4.**

NO

**Replace the boost pressure sensor. Perform "After-inspection work" of INFORMATION section.**

## 4 Inspect the sensor power supply

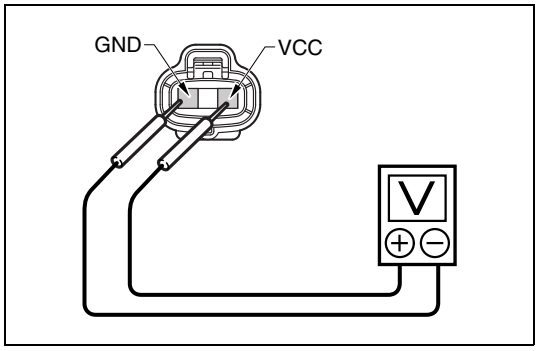


SAPH16F010300178

1. Set the starter switch to the "ON" position.
2. Use the electrical tester to measure the voltage between the terminals of the boost pressure sensor vehicle-side connector.

| Measurement conditions | Tester connections | Standard values |
|---|---|---|
| Starter switch: ON | Boost pressure sensor vehicle-side connector VCC – GND | 4.5 – 5.5 V |

**Do the measurements meet the standard value?**

YES

**Go to step 5.**

NO

**Go to step 6.**

## 5 Inspect the sensor signal circuit

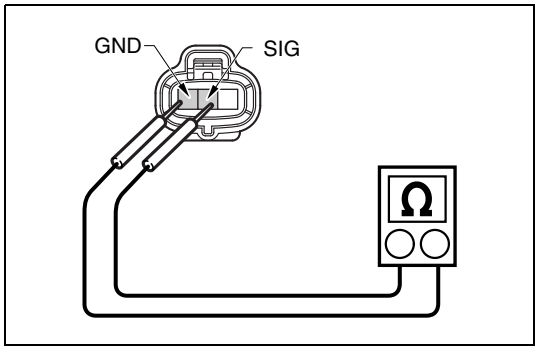


SAPH16F010300179

1. Set the starter switch to the "LOCK" position.
2. Use the electrical tester to measure the resistance between the terminals of the boost pressure sensor vehicle-side connector.

| Measurement conditions | Tester connections | Standard values |
|---|---|---|
| Starter switch: LOCK | Boost pressure sensor vehicle-side connector SIG – GND | 209 – 231 Ω |

**Do the measurements meet the standard value?**

YES

**Go to step 8.**

NO

**Go to step 6.**

## 6 Inspect for short-circuit of the boost pressure sensor harness

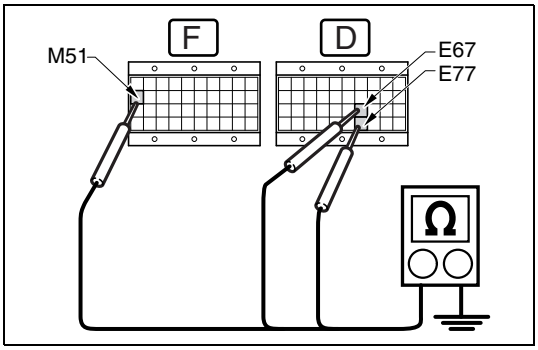


SAPH16F010300180

1. Set the starter switch to the "LOCK" position.
2. Connect the signal check harness to the engine ECU. (Do not connect the harness to the ECU.)
3. Use the electrical tester to measure the resistance between the terminals of the engine ECU (signal check harness) and ground.

| Measuremen conditions | Tester connections | Standard values |
|---|---|---|
| **Starter switch: LOCK** | **Engine ECU (signal check harness) M51(AV3) – Ground E67(PIM) – Ground E77(AG3) – Ground** | **∞ Ω** |

**Do the measurements meet the standard value?**

**YES**

**Go to step 7.**

**NO**

**Repair or replace the harness.**
**Perform "After-inspection work" of INFORMATION section.**

## 7 Inspect disconnection of the boost pressure sensor harness

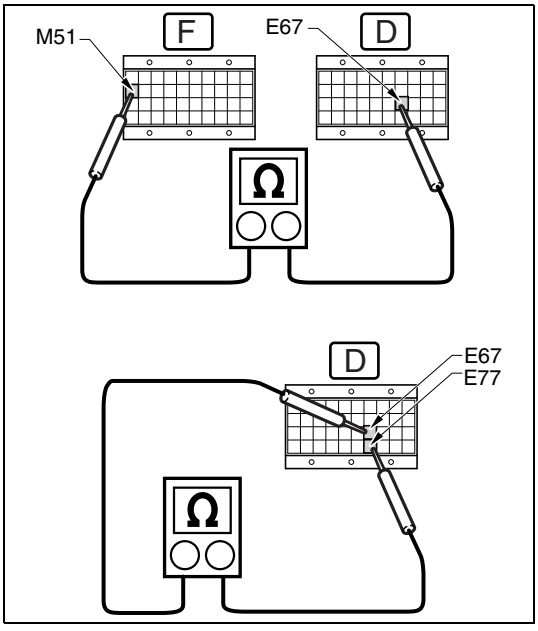


SAPH16F010300181

1. Connect the boost pressure sensor connector.
2. Use the electrical tester to measure the resistance between the terminals of the engine ECU (signal check harness).

| Measurement conditions | Tester connections | Standard values |
|---|---|---|
| **Starter switch: LOCK** | **Engine ECU (signal check harness) M51(AV3) – E67(PIM) E77(AG3) – E67(PIM)** | **2 – 15 kΩ** |

**Do the measurements meet the standard value?**

**YES**

**Go to step 8.**

**NO**

**Repair or replace the harness.**
**Perform "After-inspection work" of INFORMATION section.**

| 8 | **Check the DTC detected (Engine ECU) [HINO DX ll ]** |
|---|---|

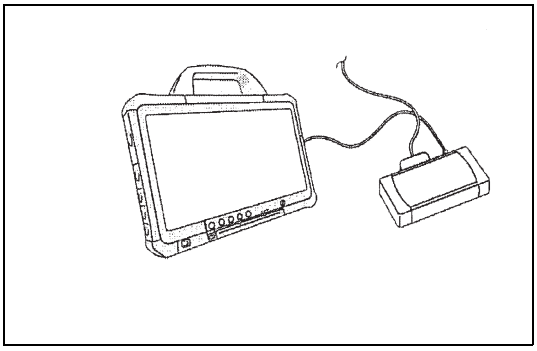

SAPH16F010300182

1. Perform engine warm-up. (engine coolant temperature: 60 °C {140 °F} or more)
2. Stop the engine and set the starter switch to the "LOCK" position.
3. Connect the vehicle to HINO DX II .
4. Set the starter switch to the "ON" position.
5. Select [Engine] and check if P0108 has been detected.

**Has DTC P0108 been detected?**

**YES**

**Replace the engine ECU.**
**Perform "After-inspection work" of INFORMATION section.**

**NO**

**Procedure completed.**
**Perform "After-inspection work" of INFORMATION section.**

# DTC: P0111

EN01H16F01030F03001037

## P0111: Intake air temperature sensor (air flow sensor built-in) - rationality

INFORMATION

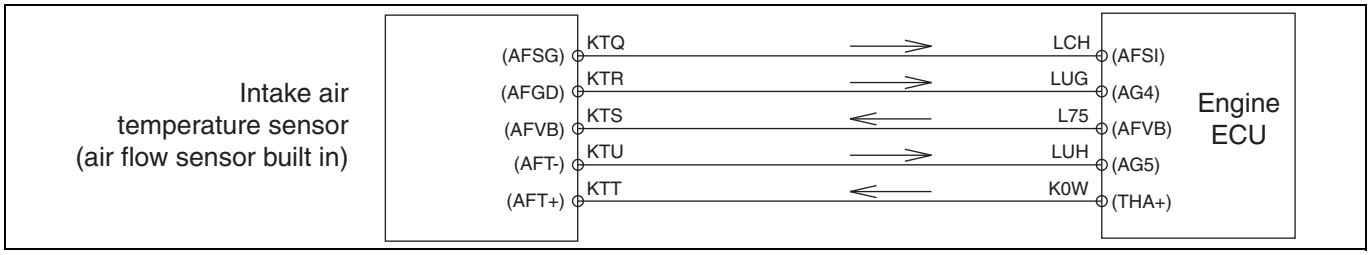


SAPH16F010300183

**1. Technical description**

- The intake air temperature sensor with built-in air flow sensor constantly measures the intake air temperature.

**<Description of malfunction>**

- Intake air temperature is not correctly recognized.

**2. DTC set condition**

(1) DTC detection condition

- The following conditions continue for at least 30 seconds:
  - Engine speed is 1,000 r/min or less.
  - Starter switch ON.
  - Fuel injection quantity is at least 35 $mm^3$/st. cyl or less.
  - Engine coolant temperature is between -30 °C {-22 °F} to 60 °C {140 °F}.
  - Battery voltage is in the range of 10 V to 15 V.
  - EGR valve is fully closed.

(2) Judgment criteria

- The following conditions continue for at least 3 seconds:
  - Difference between intake air temperature (air flow sensor) and intake air temperature (intercooler outlet) is at least 30 °C {86 °F}, and difference between intake air temperature (air flow sensor) and intake manifold air temperature is at least 30 °C {86 °F}.

**3. Reset condition**

- After restoration to normal condition.

**4. Indication, warning or system control regulation when the DTC is set.**

- MIL: ON
- SVS light: OFF

**5. Symptoms on the vehicle when the DTC is set**

**<Symptoms on the vehicle due to backup control (fail safe function)>**

- –

**<Symptoms on the vehicle due to malfunction>**

- –

**6. Pre-inspection work**

- Check that the battery voltage is in the normal range.

**7. After-inspection work**

- Clear all past DTCs.
- Check that no DTC is detected after test drive.

**8. Estimated failure factors**

- Sensor is disconnected from measuring site or sensing unit is malfunctioning (due to dirt, clogging, damage, etc.).
- Faulty resistance (due to sticking).
- Engine ECU sensor power supply or internal circuit failure.

## INSPECTION PROCEDURE: P0111

**1 Inspect the intake air temperature sensor connector**

1. Check the connection of the intake air temperature sensor (air flow sensor) connector (Looseness and poor contact).

**Was any failure found?**

**YES**

**Connect securely, repair if needed.**
**Perform "After-inspection work" of INFORMATION section.**

**NO**

**Go to step 2.**

**2 Inspect the intake air temperature sensor**

1. Check the installation of the intake air temperature sensor (air flow sensor).
2. Make sure there is no dirt or damage to the intake air temperature sensor (air flow sensor).

**Was any failure found?**

**YES**

**If dirt, clogging or damage was found in sensing unit, replace the intake air temperature sensor (air flow sensor).**
**Perform "After-inspection work" of INFORMATION section.**

**NO**

**Go to step 3.**

| 3 | Inspect the intake air temperature sensor unit |
|---|---|

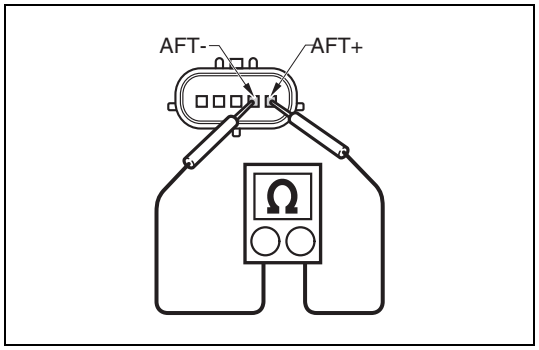


SAPH16F010300184

1. Set the starter switch to the "LOCK" position.
2. Disconnect the intake air temperature sensor (air flow sensor) connector.
3. Measure the resistance between the terminals of the sensor using the electrical tester.

| Measurement conditions | Tester connections | Standard values |
|---|---|---|
| Starter switch: LOCK | Intake air temperature sensor AFT+ – AFT- | 20 °C {68 °F}: 2.69 – 2.21 kΩ<br>60 °C {140 °F}: 0.667 – 0.493 kΩ |

**Do the measurements meet the standard value?**

**YES**

**Go to step 4.**

**NO**

**Replace the intake air temperature sensor. Perform "After-inspection work" of INFORMATION section.**

| 4 | Inspect the intake air temperature sensor power supply |
|---|---|

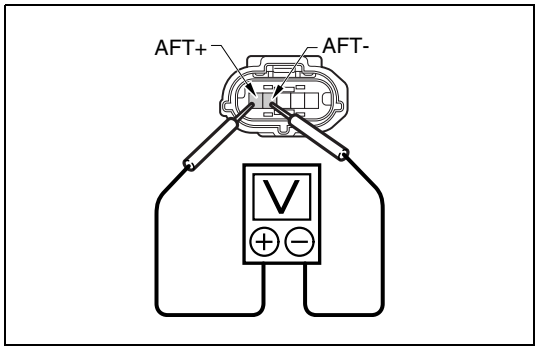


SAPH16F010300185

1. Set the starter switch to the "ON" position.
2. Measure the voltage between the terminals of the intake air temperature sensor vehicle-side connector using the electrical tester.

| Measurement conditions | Tester connections | Standard values |
|---|---|---|
| Starter switch: ON | Intake air temperature sensor vehicle-side connector AFT+ – AFT- | 4.5 – 5.5 V |

**Do the measurements meet the standard value?**

**YES**

**Go to step 7.**

**NO**

**Go to step 5.**

## 5 Inspect for short-circuits in wire harness of intake air temperature sensor

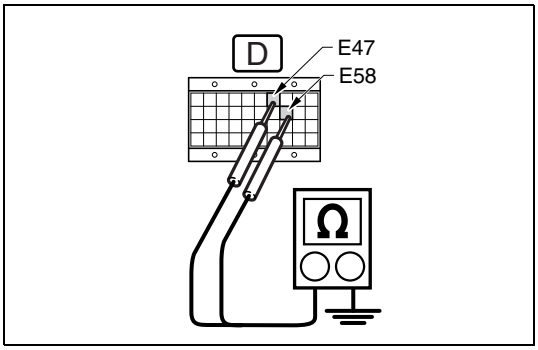

SAPH16F010300186

1. Set the starter switch to the "LOCK" position.
2. Connect the signal check harness to the engine ECU vehicle-side harness. (Do not connect harness to the ECU.)
3. Use the electrical tester to measure the resistance between each terminal in the engine ECU (signal check harness) and ground.

| Measurement conditions | Tester connections | Standard values |
|---|---|---|
| **Starter switch: LOCK** | **Engine ECU (signal check harness) THA+(E47) – Ground AG5(E58) – Ground** | **∞ Ω** |

**Do the measurements meet the standard value?**

**YES**

**Go to step 6.**

**NO**

**Repair or replace the harness.**
**Perform "After-inspection work" of INFORMATION section.**

## 6 Inspect for disconnection in wire harness of intake air temperature sensor

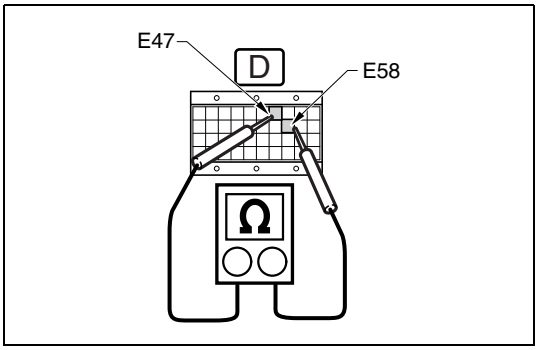

SAPH16F010300187

1. Connect the intake air temperature sensor connector.
2. Use the electrical tester to measure the resistance between the terminals in the engine ECU (signal check harness).

| Measurement conditions | Tester connections | Standard values |
|---|---|---|
| **Starter switch: LOCK** | **Engine ECU (signal check harness) THA+(E47) – AG5(E58)** | **20 °C {68 °F}: 2.69 – 2.21 kΩ 60 °C {140 °F}: 0.667 – 0.493 kΩ** |

**Do the measurements meet the standard value?**

**YES**

**Go to step 7.**

**NO**

**Repair or replace the harness.**
**Perform "After-inspection work" of INFORMATION section.**

| 7 | Check the DTC detected (Engine ECU) [HINO DX ll ] |
|---|---|

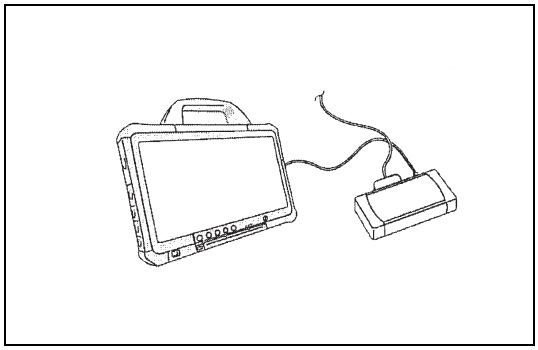

SAPH16F010300188

1. Perform an engine warm-up. (engine coolant temperature: 60 °C {140 °F} or more)
2. Stop the engine and set the starter switch to the "LOCK" position.
3. Connect the vehicle to HINO DX II .
4. Set the starter switch to the "ON" position.
5. Select [Engine] and check if P0111 has been detected.

**Has DTC P0111 detected?**

**YES**

**Replace the engine ECU.**
**Perform "After-inspection work" of INFORMATION section.**

**NO**

**Procedure completed.**
**Perform "After-inspection work" of INFORMATION section.**

# DTC: P0112 and P0113

EN01H16F01030F03001038

## P0112: Intake air temperature sensor (air flow sensor built-in) - out of range (Out of range low)

INFORMATION

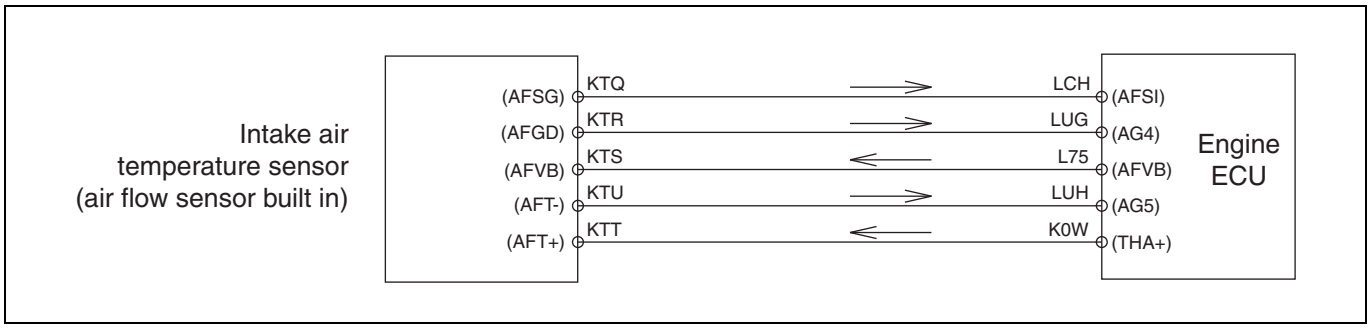


SAPH16F010300189

**1. Technical description**

- The intake air temperature sensor built in the air flow sensor consistently measures intake air temperature.

**<Description of malfunction>**

- The intake air temperature cannot be correctly recognized.

**2. DTC set condition**

(1) DTC detection condition

- Starter switch ON.
- Battery voltage is in the range of 10 V to 16 V.

The conditions described above remain for 5 seconds or longer.

(2) Judgment criteria

- Output of the intake air temperature sensor (air flow sensor built-in) remains less than 0.06 V (105 °C {221 °F}) for 3 seconds or longer.

**3. Reset condition**

- After restoration to normal condition.

**4. Indication, warning or system control regulation when the DTC is set.**

- MIL: ON
- SVS light: OFF

**5. Symptoms on the vehicle when the DTC is set**

**<Symptoms on the vehicle due to backup control (fail safe function)>**

- –

**<Symptoms on the vehicle due to malfunction>**

- –

**6. Pre-inspection work**

- Check that the battery voltage is in the normal range.

**7. After-inspection work**

- Clear all past DTCs.
- Check that no DTC is stored after test drive.

**8. Estimated failure factors**

- Loose/disconnected sensor or failure in sensing area (contamination, clogging or breakage)
- Abnormality in resistance of sensor
- Failure in engine ECU sensor power supply, internal circuit failure
- Disconnection or short-circuit in sensor harness
- Faulty connector contact or fit

## P0113: Intake air temperature sensor (air flow sensor built-in) - out of range (Out of range high)

INFORMATION

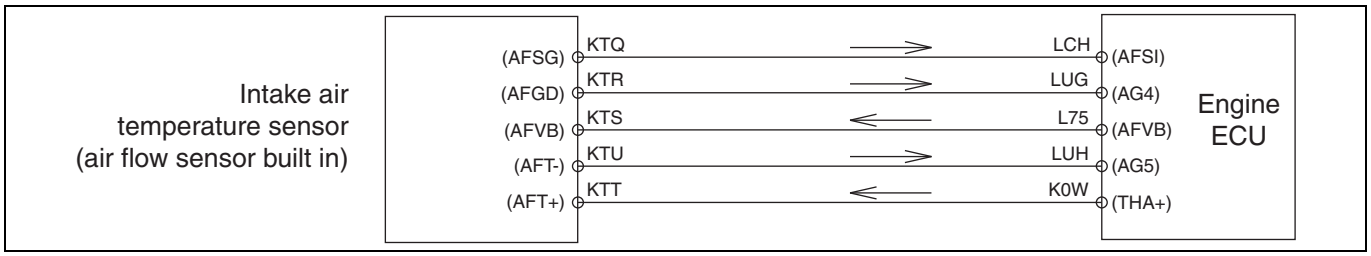


SAPH16F010300190

**1. Technical description**

- The intake air temperature sensor built in the air flow sensor consistently measures intake air temperature.

**<Description of malfunction>**

- The intake air temperature cannot be correctly recognized.

**2. DTC set condition**

(1) DTC detection condition

- Starter switch ON.
- Battery voltage is in the range of 10 V to 16 V.

The conditions described above remain for 5 seconds or longer.

(2) Judgment criteria

- Output of the intake air temperature sensor remains less than 4.55 V (-40 °C {-40 °F}) for 3 seconds or longer.

**3. Reset condition**

- After restoration to normal condition.

**4. Indication, warning or system control regulation when the DTC is set.**

- MIL: ON
- SVS light: OFF

**5. Symptoms on the vehicle when the DTC is set**

**<Symptoms on the vehicle due to backup control (fail safe function)>**

- –

**<Symptoms on the vehicle due to malfunction>**

- –

**6. Pre-inspection work**

- Check that the battery voltage is in the normal range.

**7. After-inspection work**

- Clear all past DTCs.
- Check that no DTC is stored after test drive.

**8. Estimated failure factors**

- Abnormality in resistance of sensor
- Failure in engine ECU sensor power supply, internal circuit failure
- Disconnection or short-circuit in sensor harness
- Faulty connector contact or fit
- Internal sensor short-circuit

## INSPECTION PROCEDURE: P0112 and P0113

| 1 | Inspect the intake air temperature sensor connector |
|---|---|

1. Check the connection of the intake air temperature sensor (air flow sensor) connector (Looseness and poor contact).

**Was any failure found?**

**YES**

**Connect securely, repair if needed.**
**Perform "After-inspection work" of INFORMATION section.**

**NO**

**Go to step 2.**

| 2 | Inspect the intake air temperature sensor |
|---|---|

1. Check the installation of the intake air temperature sensor (air flow sensor).
2. Make sure there is no dirt or damage to the intake air temperature sensor (air flow sensor).

**Was any failure found?**

**YES**

**Clean the intake air temperature sensor (air flow sensor) and install it properly.**
**If damaged, replace the intake air temperature sensor.**
**Perform "After-inspection work" of INFORMATION section.**

**NO**

**Go to step 3.**

| 3 | Inspect the intake air temperature sensor unit |
|---|---|

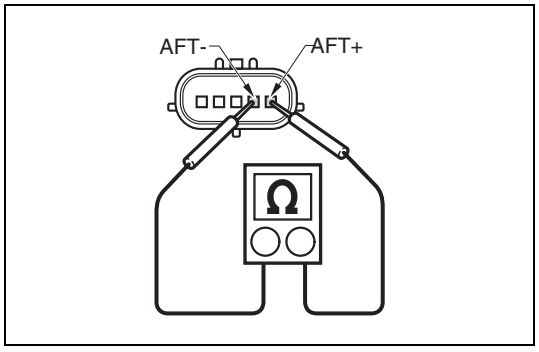


SAPH16F010300191

1. Set the starter switch to the "LOCK" position.
2. Disconnect the connector of intake air temperature sensor (air flow sensor built-in).
3. Measure the resistance between the terminals of the intake air temperature sensor (air flow sensor built-in).

| Measurement conditions | Tester connections | Standard values |
|---|---|---|
| **Starter switch: LOCK** | **Intake air temperature sensor AFT- – AFT+** | **20 °C {68 °F}: 2.69 – 2.21 kΩ** |

**Do the measurements meet the standard value?**

| YES | NO |
|---|---|
| **Go to step 4.** | **Replace the intake air temperature sensor. Perform "After-inspection work" of INFORMATION section.** |

## 4 Inspect the intake air temperature sensor power supply

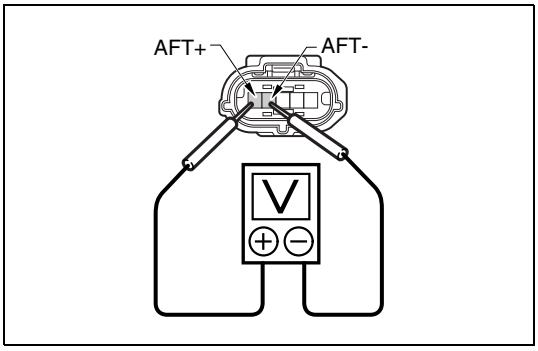

SAPH16F010300192

1. Set the starter switch to the "ON" position.
2. Measure the voltage between the terminals of the intake air temperature sensor (air flow sensor built-in) (vehicle-side connector).

| Measurement conditions | Tester connections | Standard values |
|---|---|---|
| **Starter switch: ON** | **Intake air temperature sensor vehicle-side connector AFT- – AFT+** | **4.5 – 5.5 V** |

**Do the measurements meet the standard value?**

| YES | NO |
|---|---|
| **Go to step 7.** | **Go to step 5.** |

## 5 Inspect for short-circuit in wire harness of intake air temperature sensor

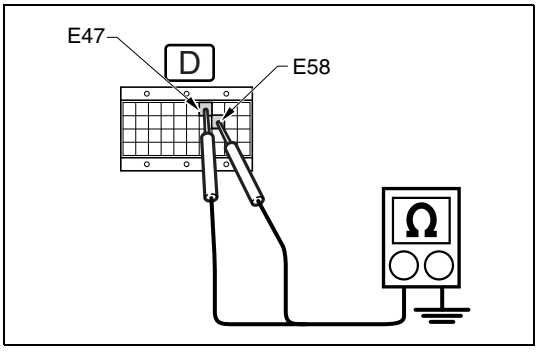

SAPH16F010300193

1. Set the starter switch to the "LOCK" position.
2. Connect the signal check harness to the engine ECU vehicle-side harness. (Do not connect the harness to the ECU.)
3. Use the electrical tester to measure the resistance between each terminal in the engine ECU (signal check harness) and ground.

| Measurement conditions | Tester connections | Standard values |
|---|---|---|
| **Starter switch: LOCK** | **Engine ECU (signal check harness) E47(THA+) – Ground E58(AG5) – Ground** | **∞ Ω** |

**Do the measurements meet the standard value?**

YES

**Go to step 6.**

NO

**Repair or replace the harness.**
**Perform "After-inspection work" of INFORMATION section.**

## 6 Inspect for disconnection in wire harness of intake air temperature sensor

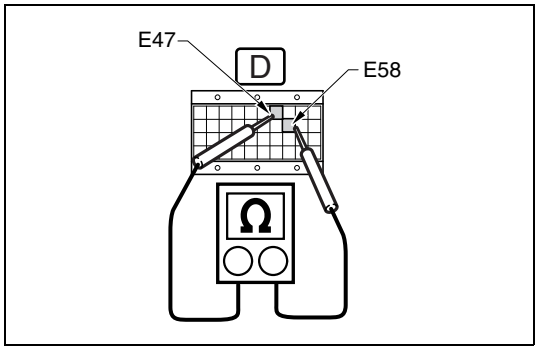


SAPH16F010300194

1. Connect the intake air temperature sensor connector.
2. Use the electrical tester to measure the resistance between the terminals of the engine ECU (signal check harness).

| Measurement conditions | Tester connections | Standard values |
|---|---|---|
| Starter switch: LOCK | Engine ECU (signal check harness) E47(THA+) – E58(AG5) | 20 °C {68 °F}: 2.69 – 2.21 kΩ |

**Do the measurements meet the standard value?**

YES

**Go to step 7.**

NO

**Repair or replace the harness.**
**Perform "After-inspection work" of INFORMATION section.**

## 7 Check the DTC detected (Engine ECU) [HINO DX II ]

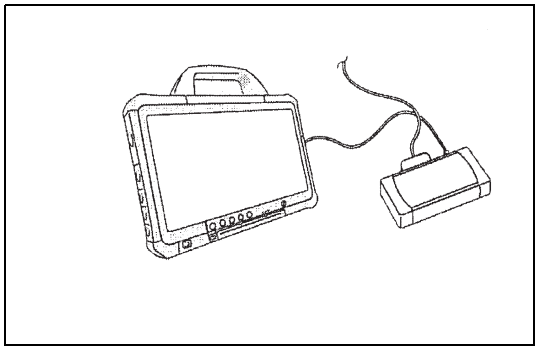

SAPH16F010300195

1. Warm-up the engine. (engine coolant temperature: 60 °C {140 °F} or more)
2. Stop the engine and set the starter switch to the "LOCK" position.
3. Connect the vehicle to HINO DX II .
4. Set the starter switch to the "ON" position.
5. Select [Engine] and check if the DTC (P0112 or P0113) has been detected.

**Has DTC (P0112 or P0113) been detected?**

YES

**Replace the engine ECU.**
**Perform "After-inspection work" of INFORMATION section.**

NO

**Procedure completed.**
**Perform "After-inspection work" of INFORMATION section.**

# DTC: P0115

EN01H16F01030F03001039

## P0115: Malfunction of coolant temperature sensor and intake air temperature sensor

INFORMATION

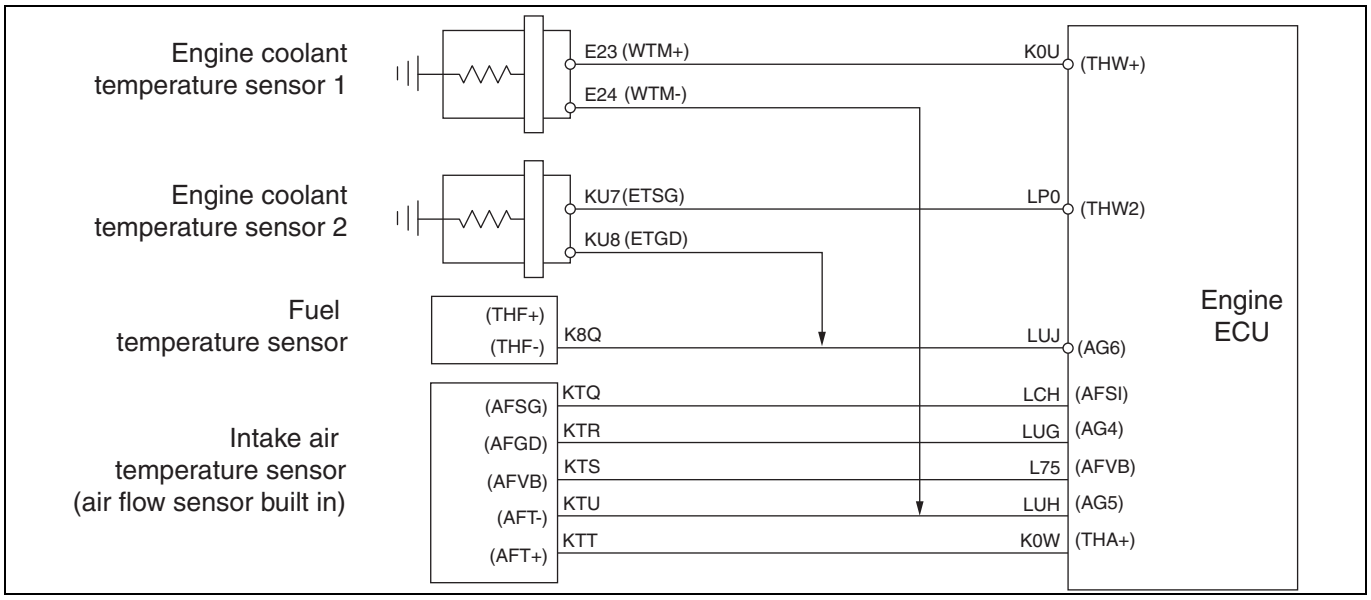


SAPH16F010300196

**1. Technical description**

- Two engine coolant temperature sensors are installed in thermostat case and constantly measure the engine coolant temperature.
- Although some exhaust gas components operate after the engine coolant temperature has risen to some degree (engine warm-up), when an engine coolant temperature sensor reads a value lower than the actual temperature, it means it is not working properly. Diagnosis is therefore required to detect if there is something wrong with the characteristics of the engine coolant temperature sensor.

**<Description of malfunction>**

- Failure of both engine coolant temperature sensors is detected.

**2. DTC set condition**

(1) DTC detection condition

- Engine speed is at least 500 r/min or engine is stopped.
- Battery voltage is in the range of 10 V to 16 V.

(2) Judgment criteria

- When it is deemed that both engine coolant temperature sensors are malfunctioning.

**3. Reset condition**

- Problem does not recur in the same driving cycle.
- Normal operation is restored when in subsequent driving cycles, readings are in the normal range within the above detection conditions.
- Three driving cycles must be deemed normal for MIL to be OFF.

**4. Indication, warning or system control regulation when the DTC is set.**

- MIL: ON
- SVS light: OFF

**5. Symptoms on the vehicle when the DTC is set**

**<Symptoms on the vehicle due to backup control (fail safe function)>**

- Engine output is insufficient.
- EGR valve is fully closed.

**<Symptoms on the vehicle due to malfunction>**

- –

**6. Pre-inspection work**

- Check that the battery voltage is in the normal range.

**7. After-inspection work**

- Clear all past DTCs.
- Check that no DTC is detected after test drive.

**8. Estimated failure factors**

- Abnormal resistance of the engine coolant temperature sensor.
- Engine ECU sensor power supply failure.

## INSPECTION PROCEDURE: P0115

| 1 | Inspect the engine coolant temperature sensor 1 connector |
|---|---|

1. Check the connection of the engine coolant temperature sensor 1 connector (Looseness and poor contact).

**Was any failure found?**

**YES**

**Connect securely, repair if needed.**
**Perform "After-inspection work" of INFORMATION section.**

**NO**

**Go to step 2.**

| 2 | Inspect the engine coolant temperature sensor 1 |
|---|---|

1. Check the installation of the engine coolant temperature sensor 1.
2. Make sure there is no dirt or damage to the engine coolant temperature sensor 1.

**Was any failure found?**

**YES**

**Clean the engine coolant temperature sensor 1 and install it properly.**
**If damaged, replace the engine coolant temperature sensor 1.**
**Perform "After-inspection work" of INFORMATION section.**

**NO**

**Go to step 3.**

| 3 | Inspect the engine coolant temperature sensor 1 unit |
|---|---|

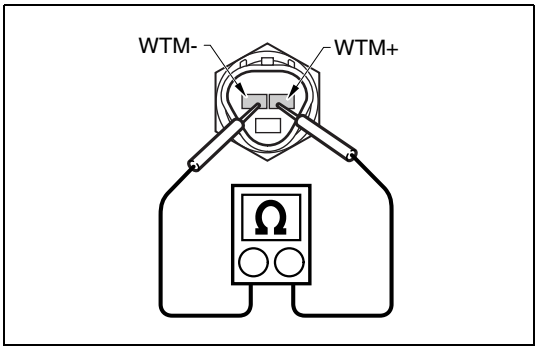


SAPH16F010300197

1. Set the starter switch to the "LOCK" position.
2. Disconnect the engine coolant temperature sensor 1.
3. Use the electrical tester to measure the resistance between the terminals of the engine coolant temperature sensor 1.

| Measurement conditions | Tester connections | Standard values |
|---|---|---|
| Starter switch: LOCK | Engine coolant temperature sensor 1 WTM+ – WTM- | 20 °C {68 °F}: 2.59 – 2.32 kΩ<br>80 °C {176 °F}: 0.326 – 0.310 kΩ |

**Do the measurements meet the standard value?**

| YES | NO |
|---|---|
| **Go to step 4.** | **Replace the engine coolant temperature sensor 1.**<br>**Perform "After-inspection work" of INFORMATION section.** |

## 4 Inspect the engine coolant temperature sensor 1 power supply

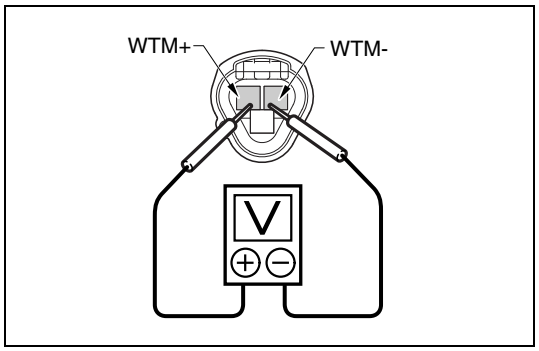

SAPH16F010300198

1. Set the starter switch to the "ON" position.
2. Use the electrical tester to measure the voltage between the terminals of the engine coolant temperature sensor 1 vehicle-side connector.

| Measurement conditions | Tester connections | Standard values |
|---|---|---|
| **Starter switch: ON** | **Engine coolant temperature sensor 1 vehicle-side connector WTM+ – WTM-** | **4.5 – 5.5 V** |

**Do the measurements meet the standard value?**

| YES | NO |
|---|---|
| **Go to step 7.** | **Go to step 5.** |

## 5 Check for short-circuit in wire harness of engine coolant temperature sensor 1

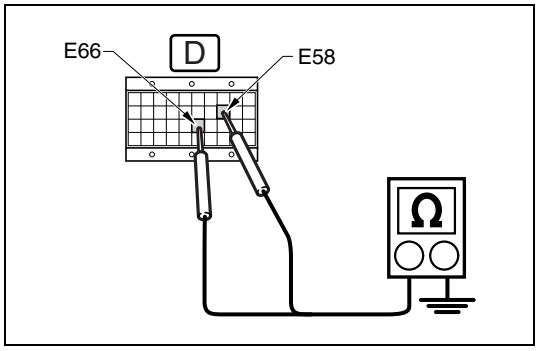

SAPH16F010300199

1. Set the starter switch to the "LOCK" position.
2. Connect the signal check harness to the engine ECU vehicle-side harness. (Do not connect harness to the ECU.)
3. Use the electrical tester to measure the resistance between each terminal in the engine ECU (signal check harness) and ground.

| Measurement conditions | Tester connections | Standard values |
|---|---|---|
| **Starter switch: LOCK** | **Engine ECU (signal check harness) THW+(E66) – Ground**<br>**AG5(E58) – Ground** | **∞ Ω** |

**Do the measurements meet the standard value?**

| YES | NO |
|---|---|
| **Go to step 6.** | **Repair or replace the harness. Perform "After-inspection work" of INFORMATION section.** |

## 6 Check for disconnection in wire harness of engine coolant temperature sensor 1

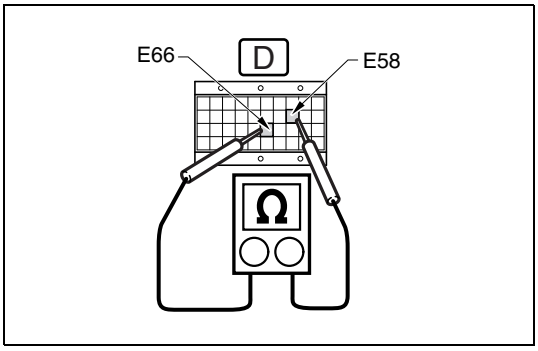

SAPH16F010300200

1. Connect the engine coolant temperature sensor 1 connector.
2. Use the electrical tester to measure the resistance between the terminals of the engine ECU (signal check harness).

| Measurement conditions | Tester connections | Standard values |
|---|---|---|
| Starter switch: LOCK | Engine ECU (signal check harness) THW+(E66) – AG5(E58) | 20 °C {68 °F}: 2.59 – 2.32 kΩ<br>80 °C {176 °F}: 0.326 – 0.310 kΩ |

**Do the measurements meet the standard value?**

| YES | NO |
|---|---|
| **Go to step 7.** | **Repair or replace the harness. Perform "After-inspection work" of INFORMATION section.** |

## 7 Inspect the engine coolant temperature sensor 2 connector

1. Check the connection of the engine coolant temperature sensor 2 connector (Looseness and poor contact).

**Was any failure found?**

| YES | NO |
|---|---|
| **Connect securely, repair if needed. Perform "After-inspection work" of INFORMATION section.** | **Go to step 8.** |

| 8 | Inspect the engine coolant temperature sensor 2 |
|---|---|

1. Check the installation of the engine coolant temperature sensor 2.
2. Make sure there is no dirt or damage to the engine coolant temperature sensor 2.

**Was any failure found?**

**YES**

**Clean the engine coolant temperature sensor 2 and install it properly.**
**If damaged, replace the engine coolant temperature sensor 2.**
**Perform "After-inspection work" of INFORMATION section.**

**NO**

**Go to step 9.**

| 9 | Inspect the engine coolant temperature sensor 2 unit |
|---|---|

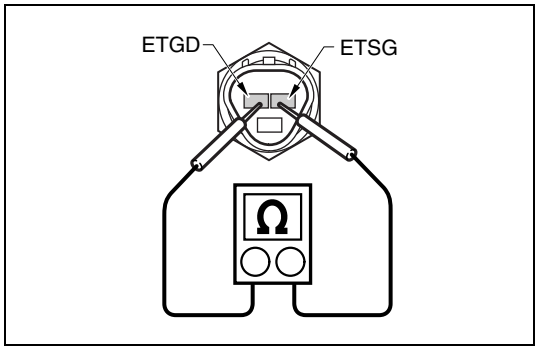

SAPH16F010300201

1. Set the starter switch to the "LOCK" position.
2. Disconnect the engine coolant temperature sensor 2 connector.
3. Use the electrical tester to measure the resistance between the terminals of the engine coolant temperature sensor 2.

| Measurement conditions | Tester connections | Standard values |
|---|---|---|
| Starter switch: LOCK | Engine coolant temperature sensor 2 ETSG – ETGD | 20 °C {68 °F}: 2.59 – 2.32 kΩ<br>80 °C {176 °F}: 0.326 – 0.310 kΩ |

**Do the measurements meet the standard value?**

**YES**

**Go to step 10.**

**NO**

**Replace the engine coolant temperature sensor 2.**
**Perform "After-inspection work" of INFORMATION section.**

## 10 Inspect the engine coolant temperature sensor 2 power supply

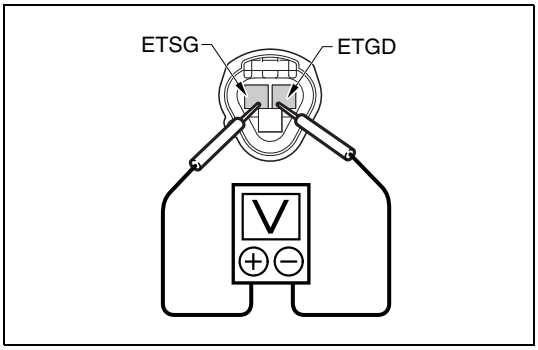


SAPH16F010300202

1. Set the starter switch to the "ON" position.
2. Use the electrical tester to measure the voltage between the terminals of the engine coolant temperature sensor 2.

| Measurement conditions | Tester connections | Standard values |
|---|---|---|
| Starter switch: ON | Engine coolant temperature sensor 2 vehicle-side connector ETSG – ETGD | 4.5 – 5.5 V |

**Do the measurements meet the standard value?**

**YES** → **Go to step 13.**

**NO** → **Go to step 11.**

## 11 Check for short-circuit in wire harness of engine coolant temperature sensor 2

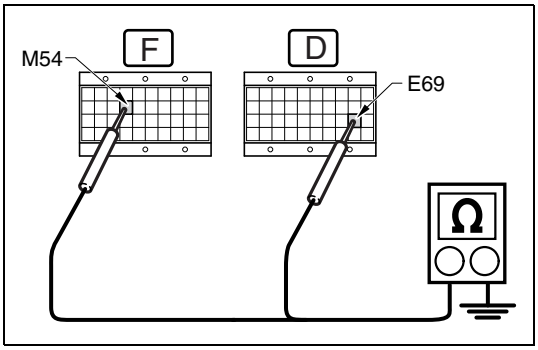


SAPH16F010300203

1. Set the starter switch to the "LOCK" position.
2. Connect the signal check harness to the engine ECU vehicle-side harness. (Do not connect harness to the ECU.)
3. Use the electrical tester to measure the resistance between each terminal in the engine ECU (signal check harness) and ground.

| Measurement conditions | Tester connections | Standard values |
|---|---|---|
| Starter switch: LOCK | Engine ECU (signal check harness) THW2(E69) – Ground AG6(M54) – Ground | ∞ Ω |

**Do the measurements meet the standard value?**

**YES** → **Go to step 12.**

**NO** → **Repair or replace the harness. Perform "After-inspection work" of INFORMATION section.**

| 12 | Check for disconnection in wire harness of engine coolant temperature sensor 2 |
|---|---|

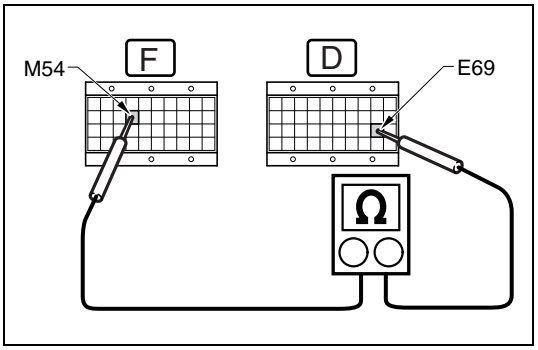


SAPH16F010300204

1. Connect the engine coolant temperature sensor 2 connector.
2. Use the electrical tester to measure the resistance between the terminals of the engine ECU (signal check harness).

| Measurement conditions | Tester connections | Standard values |
|---|---|---|
| Starter switch: LOCK | Engine ECU (signal check harness) THW2(E69) – AG6(M54) | 20 °C {68 °F}: 2.59 – 2.32 kΩ<br>80 °C {176 °F}: 0.326 – 0.310 kΩ |

**Do the measurements meet the standard value?**

**YES**

**Go to step 13.**

**NO**

**Repair or replace the harness.**
**Perform "After-inspection work" of INFORMATION section.**

| 13 | Check the DTC detected (Engine ECU) [HINO DX II ] |
|---|---|

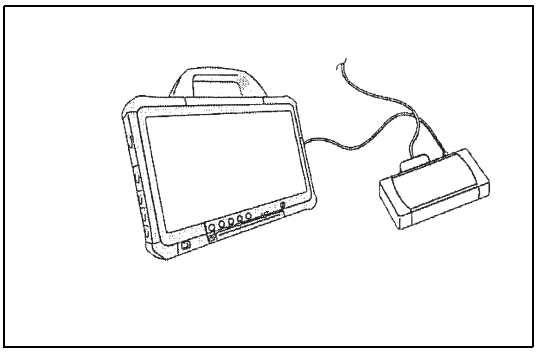

SAPH16F010300205

1. Warm-up the engine. (engine coolant temperature: 60 °C {140 °F} or more)
2. Stop the engine and set the starter switch to the "LOCK" position.
3. Connect the vehicle to HINO DX II .
4. Set the starter switch to the "ON" position.
5. Select [Engine] and check if P0115 has been detected.

**Has DTC P0115 been detected?**

**YES**

**Replace the engine ECU.**
**Perform "After-inspection work" of INFORMATION section.**

**NO**

**Procedure completed.**
**Perform "After-inspection work" of INFORMATION section.**

# DTC: P0117 and P0118

EN01H16F01030F03001040

## P0117: Engine coolant temperature sensor 1 - out of range (Out of range low)

INFORMATION

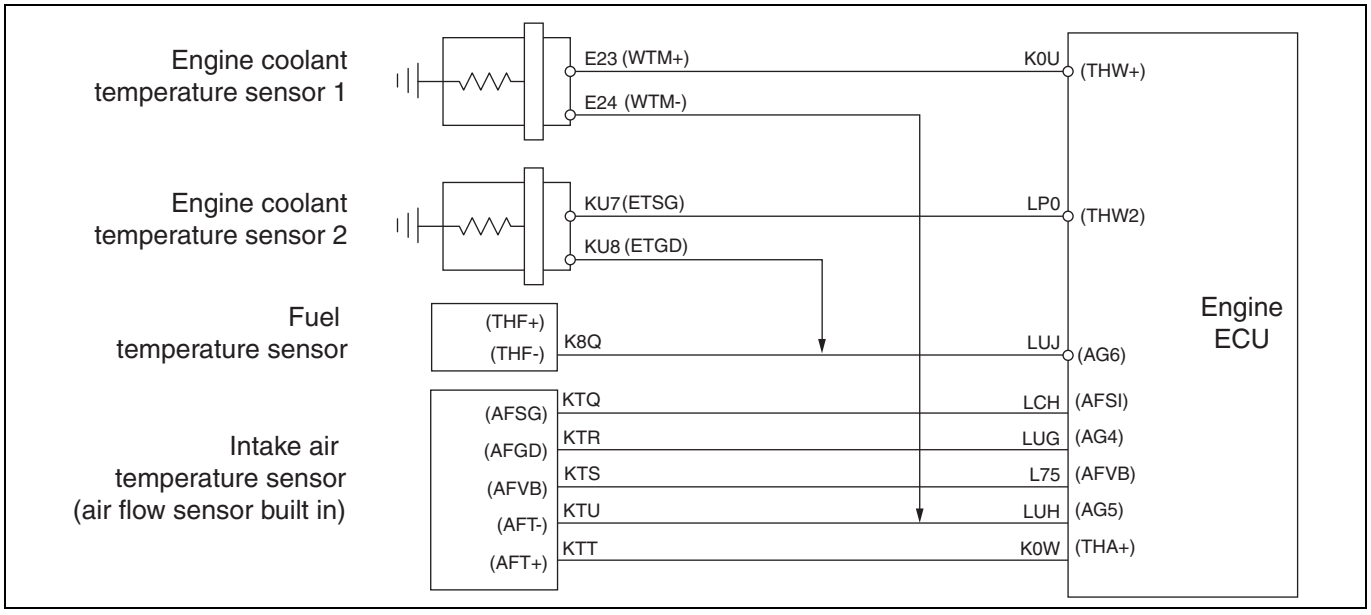


SAPH16F010300206

**1. Technical description**

- The engine coolant temperature sensor installed to the thermostat case consistently measures the engine coolant temperature.

**<Description of malfunction>**

- The engine coolant temperature cannot be correctly recognized.

**2. DTC set condition**

(1) DTC detection condition

- Starter switch ON.
- Battery voltage is in the range of 10 V to 16 V.

The conditions described above remain for 5 seconds or longer.

(2) Judgment criteria

- Output of the sensor remains at 0.1 V (139 °C {282.2 °F}) or less for 3 seconds or longer.

**3. Reset condition**

- After restoration to normal condition.

**4. Indication, warning or system control regulation when the DTC is set.**

- MIL: ON
- SVS light: OFF
- Engine output is restricted.
- Cruise control function is not available.
- Idling stop system is not available.
- Vehicle start control is not available.

**5. Symptoms on the vehicle when the DTC is set**

**<Symptoms on the vehicle due to backup control (fail safe function)>**

- Engine output is insufficient.
- Cruise control does not work.
- Idling stop system does not work.
- Vehicle start control does not work.

**<Symptoms on the vehicle due to malfunction>**

- –

**6. Pre-inspection work**

- Check that the battery voltage is in the normal range.

**7. After-inspection work**

- Clear all past DTCs.
- Check that no DTC is stored after test drive.

**8. Estimated failure factors**

- Engine coolant temperature sensor:
- Loose/disconnected sensor or failure in sensing area (contamination, clogging or breakage)
- Abnormal resistance of the engine coolant temperature sensor
- Failure in engine ECU sensor power supply, internal circuit failure
- Disconnection or short-circuit in sensor harness
- Faulty connector contact or fit

## P0118: Engine coolant temperature sensor 1 - out of range (Out of range high)

INFORMATION

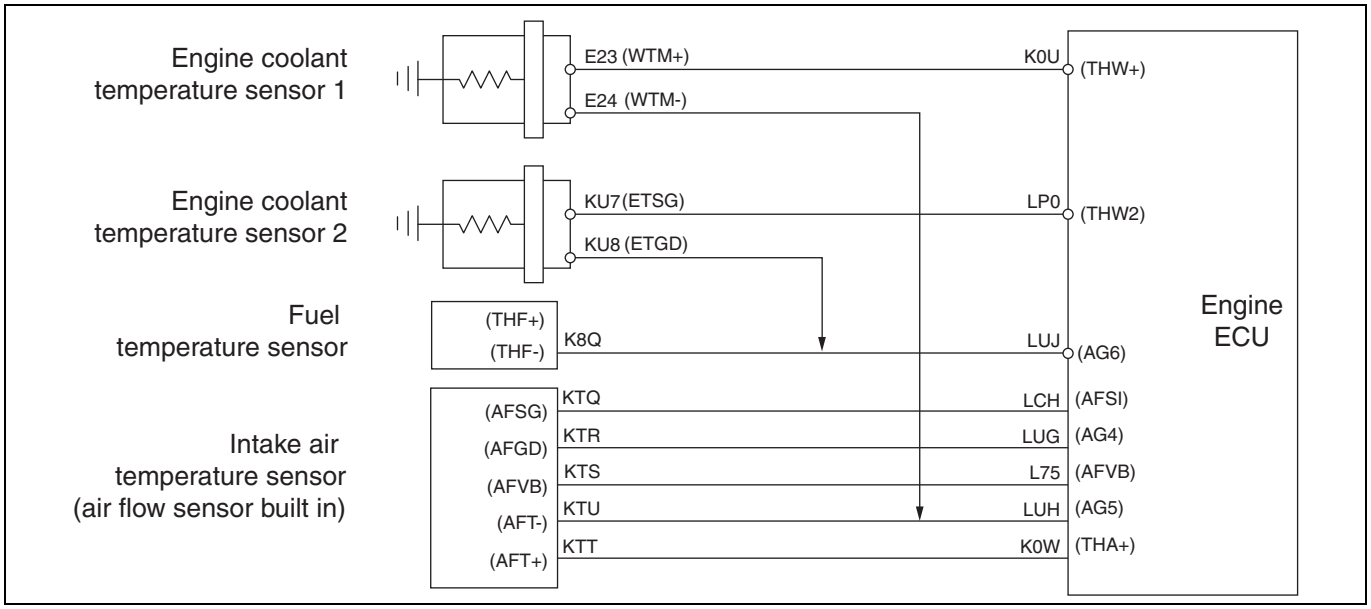


SAPH16F010300207

**1. Technical description**

- The engine coolant temperature sensor installed to the thermostat case consistently measures the engine coolant temperature.

**<Description of malfunction>**

- The engine coolant temperature cannot be correctly recognized.

**2. DTC set condition**

(1) DTC detection condition

- Starter switch ON.
- Battery voltage is in the range of 10 V to 16 V.

The conditions described above remain for 5 seconds or longer.

(2) Judgment criteria

- Output of the sensor remains at 4.77 V (-39 °C {-38.2 °F}) or greater for 3 seconds or longer.

**3. Reset condition**

- After restoration to normal condition.

**4. Indication, warning or system control regulation when the DTC is set.**

- MIL: ON
- SVS light: OFF
- Engine output is restricted.
- Cruise control function is not available.
- Idling stop system is not available.
- Vehicle start control is not available.

**5. Symptoms on the vehicle when the DTC is set**

**<Symptoms on the vehicle due to backup control (fail safe function)>**

- Engine output is insufficient.
- Cruise control does not work.
- Idling stop system does not work.
- Vehicle start control does not work.

**<Symptoms on the vehicle due to malfunction>**

- –

**6. Pre-inspection work**

- Check that the battery voltage is in the normal range.

**7. After-inspection work**

- Clear all past DTCs.
- Check that no DTC is stored after test drive.

**8. Estimated failure factors**

- Engine coolant temperature sensor:
- Loose/disconnected sensor or failure in sensing area (contamination, clogging or breakage)
- Abnormal resistance of sensor
- Failure in engine ECU sensor power supply
- Disconnection or short-circuit in sensor harness
- Faulty connector contact or fit

## INSPECTION PROCEDURE: P0117 and P0118

| 1 | Inspect the engine coolant temperature sensor connector |
|---|---|

1. Check the connection of the engine coolant temperature sensor connector (Looseness and poor contact).

**Was any failure found?**

**YES**

**Connect securely, repair if needed.**
**Perform "After-inspection work" of INFORMATION section.**

**NO**

**Go to step 2.**

| 2 | Inspect the engine coolant temperature sensor |
|---|---|

1. Check the installation of the engine coolant temperature sensor.
2. Make sure there is no dirt or damage to the engine coolant temperature sensor.

**Was any failure found?**

**YES**

**Clean the engine coolant temperature sensor and install it properly.**
**If damaged, replace the engine coolant temperature sensor.**
**Perform "After-inspection work" of INFORMATION section.**

**NO**

**Go to step 3.**

| 3 | Inspect the engine coolant temperature sensor unit |
|---|---|

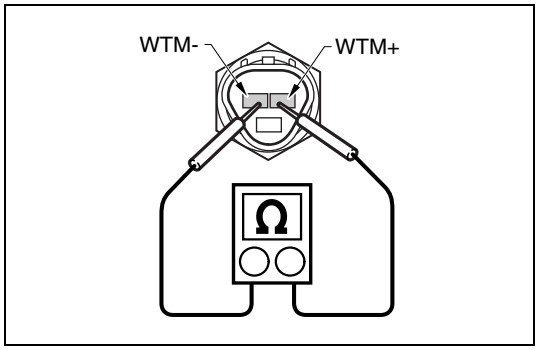

SAPH16F010300208

1. Set the starter switch to the "LOCK" position.
2. Disconnect the engine coolant temperature sensor connector.
3. Use the electrical tester to measure the resistance between the terminals of the engine coolant temperature sensor.

| Measurement conditions | Tester connections | Standard values |
|---|---|---|
| Starter switch: LOCK | Engine coolant temperature sensor WTM+ – WTM- | 20 °C {68 °F}: 2.59 – 2.32 kΩ<br>80 °C {176 °F}: 0.326 – 0.310 kΩ |

**Do the measurements meet the standard value?**

**YES**

**Go to step 4.**

**NO**

**Replace the engine coolant temperature sensor.**
**Perform "After-inspection work" of INFORMATION section.**

| 4 | Inspect the actuation power supply wire harness of the engine coolant temperature sensor |
|---|---|

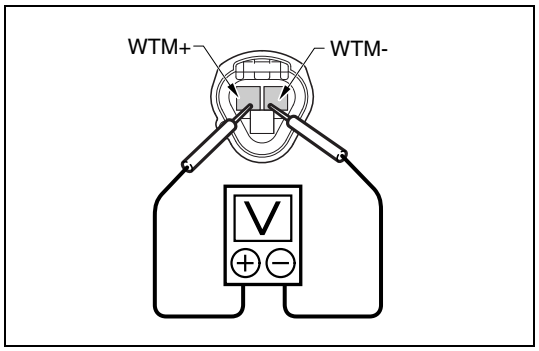

SAPH16F010300209

1. Set the starter switch to the "ON" position.
2. Use the electrical tester to measure the voltage between the terminals of the engine coolant temperature sensor vehicle-side connector.

| Measurement conditions | Tester connections | Standard values |
|---|---|---|
| Starter switch: ON | Engine coolant temperature sensor vehicle-side connector WTM+ – WTM- | 4.5 – 5.5 V |

**Do the measurements meet the standard value?**

**YES**

**Go to step 7.**

**NO**

**Go to step 5.**

| 5 | Inspect for short-circuit of the engine coolant temperature sensor harness |
|---|---|

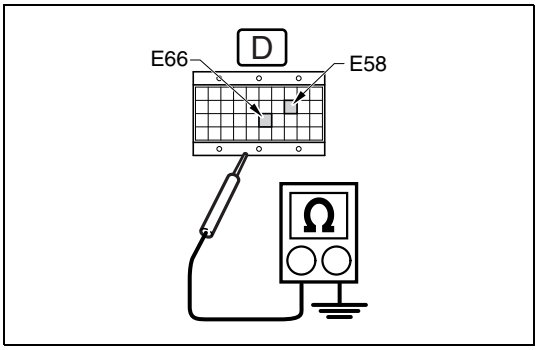

SAPH16F010300210

1. Set the starter switch to the "LOCK" position.
2. Connect the signal check harness to the engine ECU. (Do not connect the harness to the ECU.)
3. Use the electrical tester to measure the resistance between the terminals of the engine ECU (signal check harness) and ground.

| Measurement conditions | Tester connections | Standard values |
|---|---|---|
| **Starter switch: LOCK** | **Engine ECU (signal check harness) THW+(E66) – Ground AG5(E58) – Ground** | **∞ Ω** |

**Do the measurements meet the standard value?**

**YES**

**Go to step 6.**

**NO**

**Repair or replace the harness.**
**Perform "After-inspection work" of INFORMATION section.**

| 6 | Inspect disconnection of the engine coolant temperature sensor harness |
|---|---|

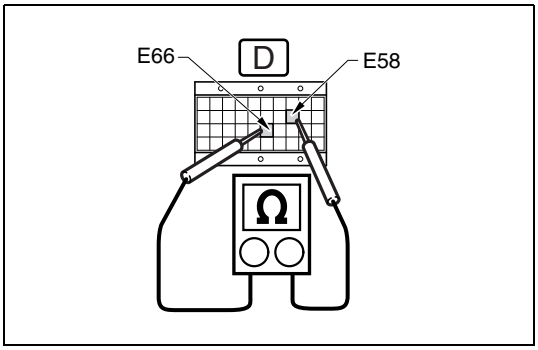

SAPH16F010300211

1. Connect the engine coolant temperature sensor connector.
2. Use the electrical tester to measure the resistance between the terminals of the engine ECU (signal check harness).

| Measurement conditions | Tester connections | Standard values |
|---|---|---|
| **Starter switch: LOCK** | **Engine ECU (signal check harness) THW+(E66) – AG5(E58)** | **20 °C {68 °F}: 2.59 – 2.32 kΩ 80 °C {176 °F}: 0.326 – 0.310 kΩ** |

**Do the measurements meet the standard value?**

**YES**

**Go to step 7.**

**NO**

**Repair or replace the harness.**
**Perform "After-inspection work" of INFORMATION section.**

| 7 | Check the DTC detected (Engine ECU) [HINO DX ll ] |
|---|---|

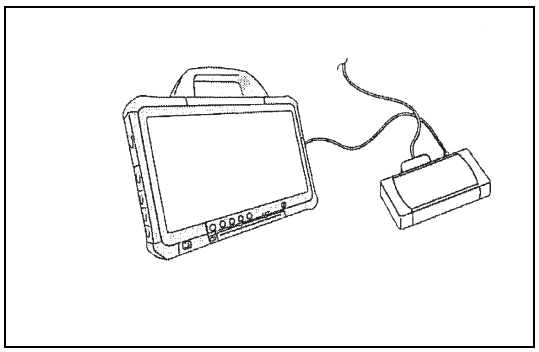

SAPH16F010300212

1. Perform engine warm-up. (engine coolant temperature: 60 °C {140 °F} or more)
2. Stop the engine and set the starter switch to the "LOCK" position.
3. Connect the vehicle to HINO DX II .
4. Set the starter switch to the "ON" position.
5. Select [Engine] and check if the DTC (P0117 or P0118) has been detected.

**Has DTC (P0117 or P0118) been detected?**

**YES**

**Replace the engine ECU.**
**Perform "After-inspection work" of INFORMATION section.**

**NO**

**Procedure completed.**
**Perform "After-inspection work" of INFORMATION section.**

# DTC: P011A

EN01H16F01030F03001041

## P011A: Engine coolant temperature sensor - rationality

INFORMATION

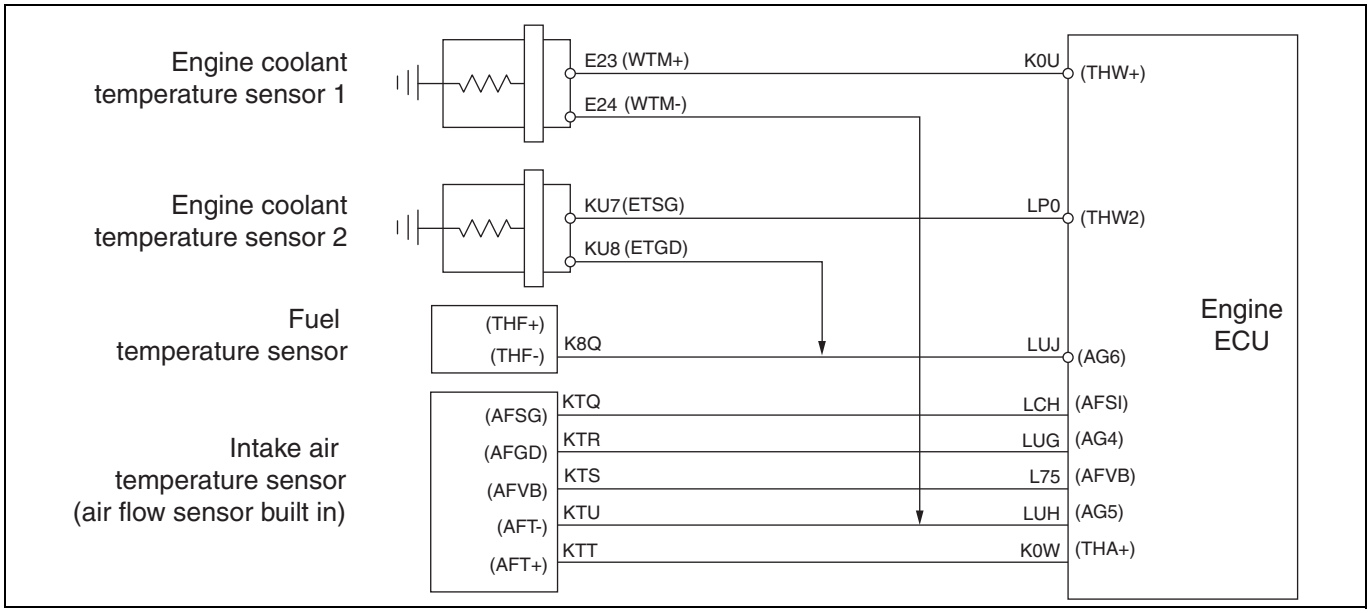


SAPH16F010300213

**1. Technical description**

- Two engine coolant temperature sensors are installed in thermostat case and constantly measure the engine coolant temperature.
- Although some exhaust gas components operate after the engine coolant temperature has risen to some degree (engine warm-up), when an engine coolant temperature sensor reads a value lower than the actual temperature, it means it is not working properly. Diagnosis is therefore required to detect if there is something wrong with the characteristics of the engine coolant temperature sensor.

**<Description of malfunction>**

- Incompatible readings from the 2 engine coolant temperature sensors are detected.

**2. DTC set condition**

(1) DTC detection condition

- Engine speed is at least 500 r/min or engine is stopped.
- Battery voltage is in the range of 10 V to 16 V.

(2) Judgment criteria

- Difference between the 2 engine coolant temperature sensors is at least 15 °C {59 °F}.

**3. Reset condition**

- Problem does not recur in the same driving cycle.
- Normal operation is restored when in subsequent driving cycles, readings are in the normal range within the above detection conditions.
- Three driving cycles must be deemed normal for MIL to be OFF.

**4. Indication, warning or system control regulation when the DTC is set.**

- MIL: ON
- SVS light: OFF

**5. Symptoms on the vehicle when the DTC is set**

**<Symptoms on the vehicle due to backup control (fail safe function)>**

- EGR valve is fully closed.

**<Symptoms on the vehicle due to malfunction>**

- –

**6. Pre-inspection work**

- Check that the battery voltage is in the normal range.

**7. After-inspection work**

- Clear all past DTCs.
- Check that no DTC is detected after test drive.

**8. Estimated failure factors**

- Abnormal resistance of the engine coolant temperature sensor
- Failure in engine ECU sensor power supply

## INSPECTION PROCEDURE: P011A

| 1 | Inspect the engine coolant temperature sensor 1 connector |
|---|---|

1. Check the connection of the engine coolant temperature sensor 1 connector (Looseness and poor contact).

**Was any failure found?**

**YES**

**Connect securely, repair if needed.**
**Perform "After-inspection work" of INFORMATION section.**

**NO**

**Go to step 2.**

| 2 | Inspect the engine coolant temperature sensor 1 |
|---|---|

1. Check the installation of the engine coolant temperature sensor 1.
2. Make sure there is no dirt or damage to the engine coolant temperature sensor 1.

**Was any failure found?**

**YES**

**Clean the engine coolant temperature sensor 1 and install it properly.**
**If damaged, replace the engine coolant temperature sensor 1.**
**Perform "After-inspection work" of INFORMATION section.**

**NO**

**Go to step 3.**

| 3 | Inspect the engine coolant temperature sensor 1 unit |
|---|---|

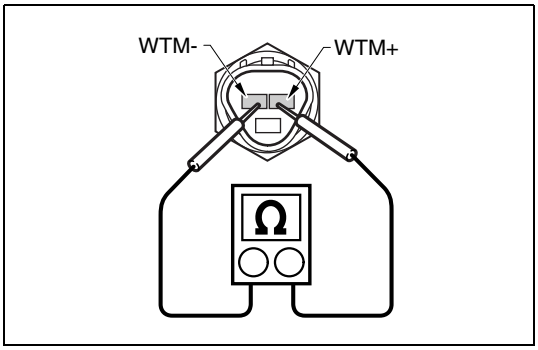


SAPH16F010300214

1. Set the starter switch to the "LOCK" position.
2. Disconnect the engine coolant temperature sensor 1 connector.
3. Use the electrical tester to measure the resistance between the terminals of the engine coolant temperature sensor 1.

| Measurement conditions | Tester connections | Standard values |
|---|---|---|
| Starter switch: LOCK | Engine coolant temperature sensor 1 WTM+ – WTM- | 20 °C {68 °F}: 2.59 – 2.32 kΩ<br>80 °C {176 °F}: 0.326 – 0.310 kΩ |

**Do the measurements meet the standard value?**

| YES | NO |
|---|---|
| **Go to step 4.** | **Replace the engine coolant temperature sensor 1.**<br>**Perform "After-inspection work" of INFORMATION section.** |

## 4 Inspect the engine coolant temperature sensor 1 power supply

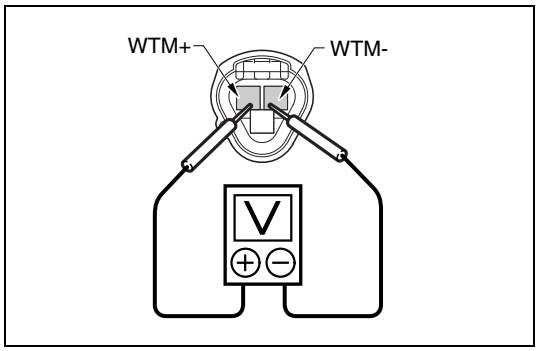

SAPH16F010300215

1. Set the starter switch to the "ON" position.
2. Use the electrical tester to measure the voltage between the terminals of the engine coolant temperature sensor 1 vehicle-side connector.

| Measurement conditions | Tester connections | Standard values |
|---|---|---|
| **Starter switch: ON** | **Engine coolant temperature sensor 1 vehicle-side connector WTM+ – WTM-** | **4.5 – 5.5 V** |

**Do the measurements meet the standard value?**

| YES | NO |
|---|---|
| **Go to step 7.** | **Go to step 5.** |

## 5 Inspect for short-circuit of the engine coolant temperature sensor 1 harness

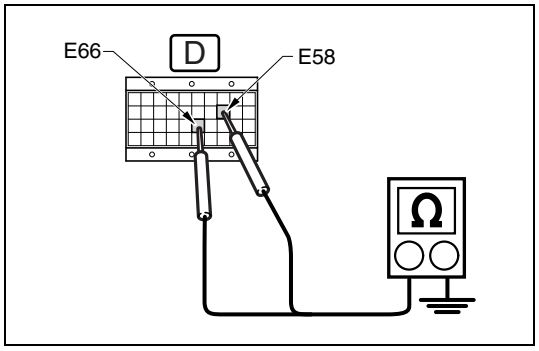

SAPH16F010300216

1. Set the starter switch to the "LOCK" position.
2. Connect the signal check harness to the engine ECU. (Do not connect harness to the engine ECU.)
3. Use the electrical tester to measure the resistance between the terminals of the engine ECU (signal check harness) and ground.

| Measurement conditions | Tester connections | Standard values |
|---|---|---|
| **Starter switch: LOCK** | **Engine ECU (signal check harness) THW+(E66) – Ground AG5(E58) – Ground** | **∞ Ω** |

**Do the measurements meet the standard value?**

**YES**

**Go to step 6.**

**NO**

**Repair or replace the harness.**
**Perform "After-inspection work" of INFORMATION section.**

## 6 Inspect disconnection of the engine coolant temperature sensor 1 harness

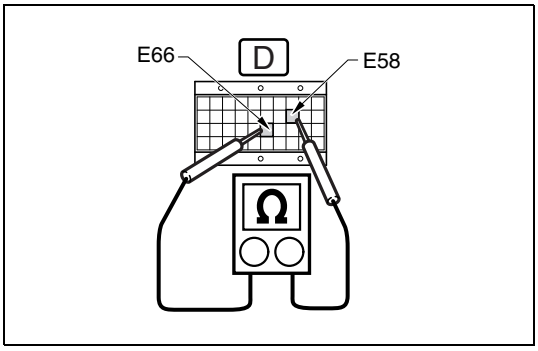

SAPH16F010300217

1. Connect the engine coolant temperature sensor 1 connector.
2. Use the electrical tester to measure the resistance between the terminals of the engine ECU (signal check harness).

| Measurement conditions | Tester connections | Standard values |
|---|---|---|
| Starter switch: LOCK | Engine ECU (signal check harness) THW+(E66) – AG5(E58) | 20 °C {68 °F}: 2.59 – 2.32 kΩ<br>80 °C {176 °F}: 0.326 – 0.310 kΩ |

**Do the measurements meet the standard value?**

**YES**

**Go to step 7.**

**NO**

**Repair or replace the harness.**
**Perform "After-inspection work" of INFORMATION section.**

## 7 Inspect the engine coolant temperature sensor 2 connector

1. Check the connection of the engine coolant temperature sensor 2 connector (Looseness and poor contact).

**Was any failure found?**

**YES**

**Connect securely, repair if needed.**
**Perform "After-inspection work" of INFORMATION section.**

**NO**

**Go to step 8.**

| 8 | Inspect the engine coolant temperature sensor 2 |
|---|---|

1. Check the installation of the engine coolant temperature sensor 2.
2. Make sure there is no dirt or damage to the engine coolant temperature sensor 2.

**Was any failure found?**

**YES**

**Clean the engine coolant temperature sensor 2 and install it properly.**
**If damaged, replace the engine coolant temperature sensor 2.**
**Perform "After-inspection work" of INFORMATION section.**

**NO**

**Go to step 9.**

| 9 | Inspect the engine coolant temperature sensor 2 unit |
|---|---|

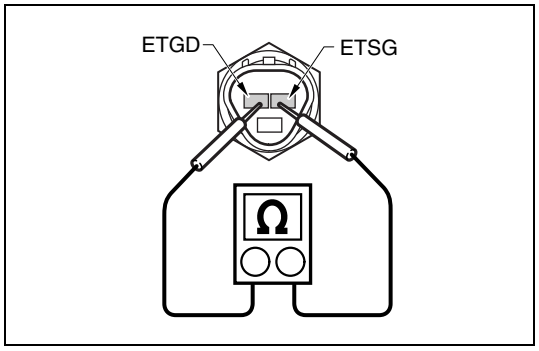

SAPH16F010300218

1. Set the starter switch to the "LOCK" position.
2. Disconnect the engine coolant temperature sensor 2 connector.
3. Use the electrical tester to measure the resistance between the terminals of the engine coolant temperature sensor 2.

| Measurement conditions | Tester connections | Standard values |
|---|---|---|
| Starter switch: LOCK | Engine coolant temperature sensor 2 ETSG – ETGD | 20 °C {68 °F}: 2.59 – 2.32 kΩ<br>80 °C {176 °F}: 0.326 – 0.310 kΩ |

**Do the measurements meet the standard value?**

**YES**

**Go to step 10.**

**NO**

**Replace the engine coolant temperature sensor 2.**
**Perform "After-inspection work" of INFORMATION section.**

## 10 Inspect the engine coolant temperature sensor 2 power supply

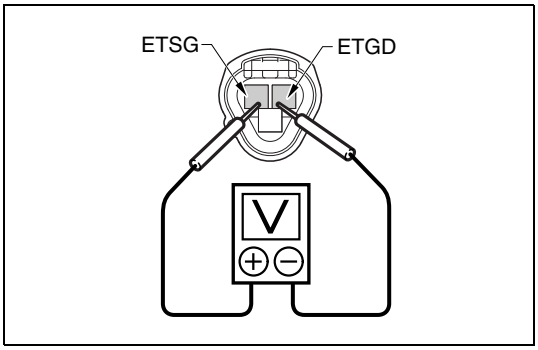


SAPH16F010300219

1. Set the starter switch to the "ON" position.
2. Use the electrical tester to measure the voltage between the terminals of the engine coolant temperature sensor 2 vehicle-side connector.

| Measurement conditions | Tester connections | Standard values |
|---|---|---|
| Starter switch: ON | Engine coolant temperature sensor 2 vehicle-side connector ETSG – ETGD | 4.5 – 5.5 V |

**Do the measurements meet the standard value?**

**YES**

**Go to step 13.**

**NO**

**Go to step 11.**

## 11 Inspect for short-circuit of the engine coolant temperature sensor 2 harness

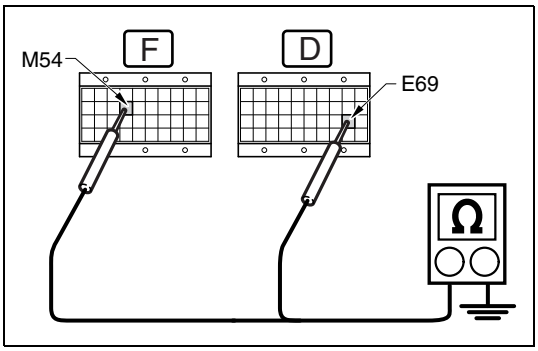


SAPH16F010300220

1. Set the starter switch to the "LOCK" position.
2. Connect the signal check harness to the engine ECU. (Do not connect harness to the engine ECU.)
3. Use the electrical tester to measure the resistance between the terminals of the engine ECU (signal check harness) and ground.

| Measurement conditions | Tester connections | Standard values |
|---|---|---|
| Starter switch: LOCK | Engine ECU (signal check harness) THW2(E69) – Ground AG6(M54) – Ground | ∞ Ω |

**Do the measurements meet the standard value?**

**YES**

**Go to step 12.**

**NO**

**Repair or replace the harness.**
**Perform "After-inspection work" of INFORMATION section.**

| 12 | Inspect disconnection of the engine coolant temperature sensor 2 harness |
|---|---|

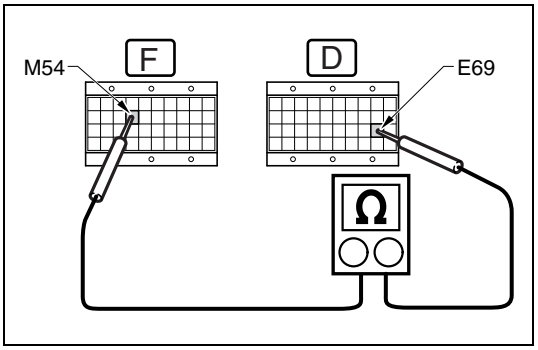


SAPH16F010300221

1. Connect the engine coolant temperature sensor 2 connector.
2. Use the electrical tester to measure the resistance between the terminals of the engine ECU (signal check harness).

| Measurement conditions | Tester connections | Standard values |
|---|---|---|
| Starter switch: LOCK | Engine ECU (signal check harness) THW2(E69) – AG6(M54) | 20 °C {68 °F}: 2.59 – 2.32 kΩ<br>80 °C {176 °F}: 0.326 – 0.310 kΩ |

**Do the measurements meet the standard value?**

**YES**

**Go to step 13.**

**NO**

**Repair or replace the harness.**
**Perform "After-inspection work" of INFORMATION section.**

| 13 | Check the DTC detected (Engine ECU) [HINO DX II ] |
|---|---|

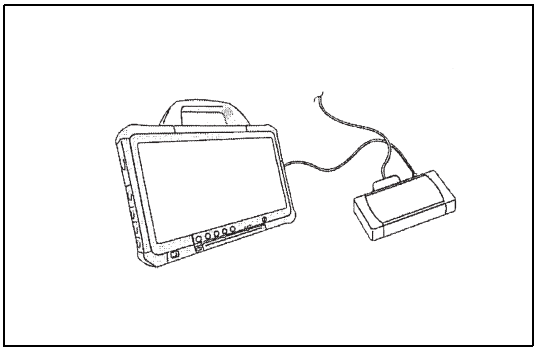

SAPH16F010300222

1. Perform engine warm-up. (engine coolant temperature: 60 °C {140 °F} or more)
2. Stop the engine and set the starter switch to the "LOCK" position.
3. Connect the vehicle to HINO DX II .
4. Set the starter switch to the "ON" position.
5. Select [Engine] and check if P011A has been detected.

**Has DTC P011A been detected?**

**YES**

**Replace the engine ECU.**
**Perform "After-inspection work" of INFORMATION section.**

**NO**

**Procedure completed.**
**Perform "After-inspection work" of INFORMATION section.**

# DTC: P0122 and P0123

EN01H16F01030F03001042

## P0122: Intake throttle valve position sensor 1 - out of range (Out of range low)

INFORMATION

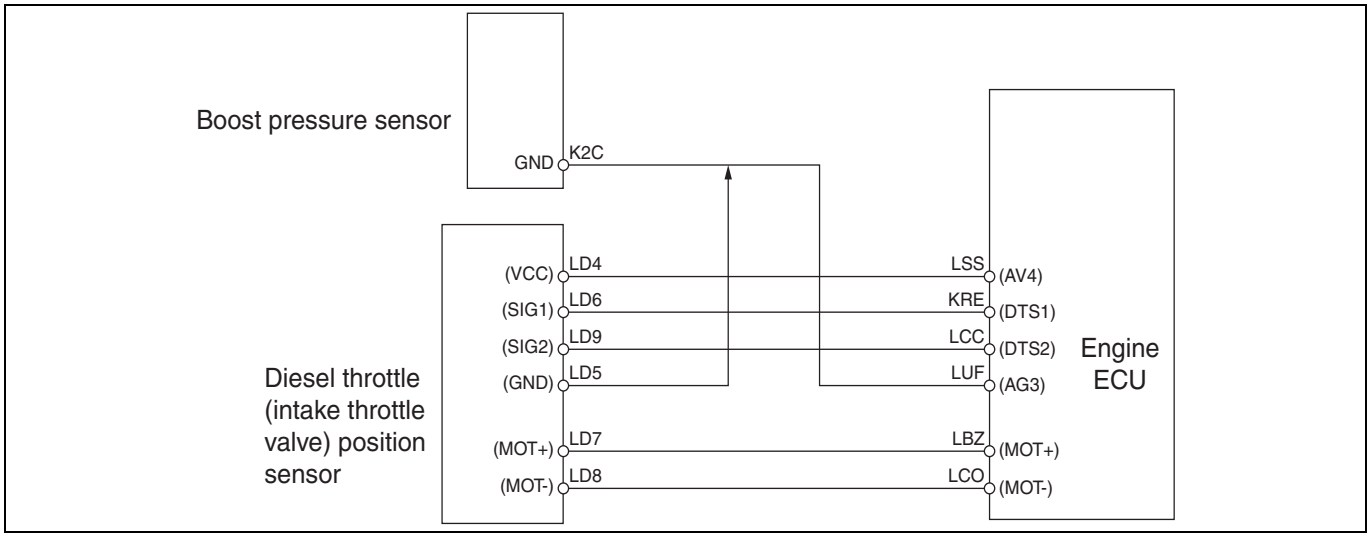


SAPH16F010300223

**1. Technical description**

- The diesel throttle controls valves steplessly to control boost pressure and intake air volume.
- Inside the diesel throttle, a sensor designed to detect a travel of the valve consistently monitors a measurement reading and an actual opening.

**<Description of malfunction>**

- Low voltage failure of diesel throttle (intake throttle valve) position sensor is detected.

**2. DTC set condition**

(1) DTC detection condition

- Starter switch ON.
- Battery voltage is in the range of 10 V to 16 V.
- The conditions described above remain for 5 seconds or longer.

(2) Judgment criteria

- Output of the sensor remains at 0.2 V (5 degrees) or more for 3 seconds or longer.

**3. Reset condition**

- After restoration to normal condition.
- Restarting after engine stall.

**4. Indication, warning or system control regulation when the DTC is set.**

- MIL: ON
- SVS light: OFF

**5. Symptoms on the vehicle when the DTC is set**

**<Symptoms on the vehicle due to backup control (fail safe function)>**

- –

**<Symptoms on the vehicle due to malfunction>**

- –

**6. Pre-inspection work**

- Check that the battery voltage is in the normal range.

**7. After-inspection work**

- Clear all past DTCs.
- Check that no DTC is stored after test drive.

**8. Estimated failure factors**

- Abnormal resistance of sensor
- Failure in engine ECU sensor power supply or internal circuit failure
- Disconnection or short-circuit in sensor harness
- Faulty connector contact or fit

## P0123: Intake throttle valve position sensor 1 - out of range (Out of range high)

INFORMATION

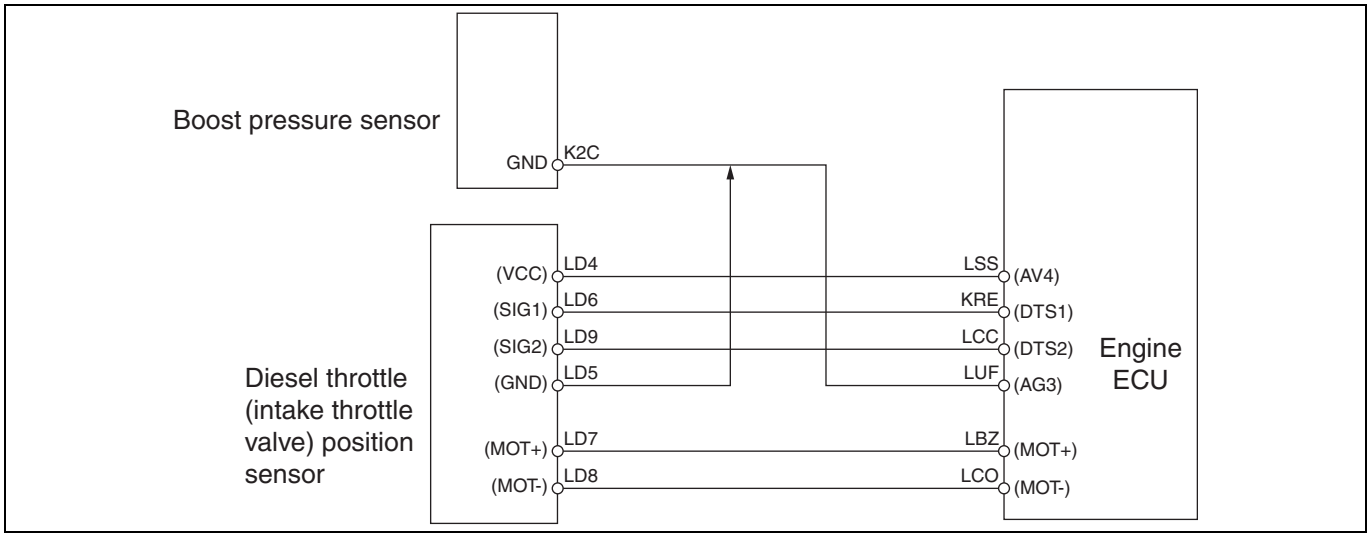


SAPH16F010300224

**1. Technical description**

- The diesel throttle controls valves steplessly to control boost pressure and intake air volume.
- Inside the diesel throttle, a sensor designed to detect a travel of the valve consistently monitors a measurement reading and an actual opening.

**<Description of malfunction>**

- High voltage failure of diesel throttle (intake throttle valve) position sensor is detected.

**2. DTC set condition**

(1) Check conditions

- Starter switch ON.
- Battery voltage is in the range of 10 V to 16 V.

The conditions described above remain for 5 seconds or longer.

(2) Judgment criteria

- Output of the sensor remains at 4.8 V (120 degrees) or more for 3 seconds or longer.

**3. Reset condition**

- After normal operation is restored.
- Restarting after engine stall.

**4. Indication, warning or system control regulation when the DTC is set.**

- MIL: ON
- SVS light: OFF

**5. Symptoms on the vehicle when the DTC is set**

**<Symptoms on the vehicle due to backup control (fail safe function)>**

- –

**<Symptoms on the vehicle due to malfunction>**

- –

**6. Pre-inspection work**

- Check that the battery voltage is in the normal range.

**7. After-inspection work**

- Clear all past DTCs.
- Check that no DTC is stored after test drive.

**8. Estimated failure factors**

- Abnormal resistance of sensor
- Engine ECU internal circuit failure
- Sensor power supply short-circuit in sensor harness
- Sensor internal short

## INSPECTION PROCEDURE: P0122 and P0123

| 1 | Inspect the diesel throttle (intake throttle valve) position sensor 1 connector |
|---|---|

1. Check the connection of the diesel throttle (intake throttle valve) position sensor 1 connector (Looseness and poor contact).

**Was any failure found?**

**YES**

**Connect securely, repair if needed.**
**Perform "After-inspection work" of INFORMATION section.**

**NO**

**Go to step 2.**

| 2 | Inspect the diesel throttle (intake throttle valve) position sensor 1 |
|---|---|

1. Check the installation of the diesel throttle (intake throttle valve) position sensor 1.
2. Make sure there is no dirt or damage to the diesel throttle (intake throttle valve) position sensor 1.

**Was any failure found?**

**YES**

**Clean the diesel throttle (intake throttle valve) position sensor 1 and install it properly.**
**If damaged, replace the diesel throttle (intake throttle valve) position sensor 1.**
**Perform "After-inspection work" of INFORMATION section.**

**NO**

**Go to step 3.**

| 3 | Inspect the diesel throttle (intake throttle valve) position sensor 1 unit |
|---|---|

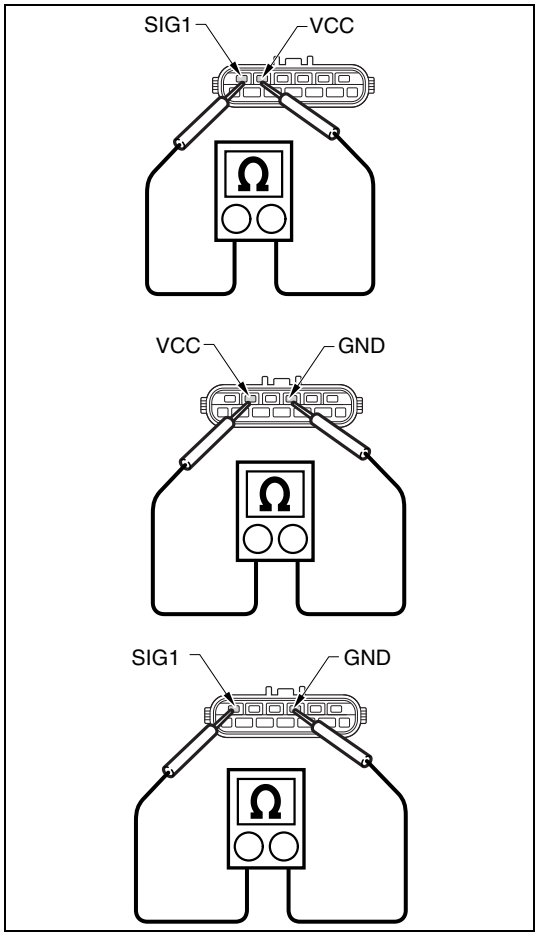


SAPH16F010300225

1. Set the starter switch to the "LOCK" position.
2. Disconnect the connector of the diesel throttle (intake throttle valve) position sensor 1 connector.
3. Use the electrical tester to measure the resistance between the terminals of the diesel throttle (intake throttle valve) position sensor 1 connector.

| Measurement conditions | Tester connections | Standard values |
|---|---|---|
| **Starter switch: LOCK** | **Diesel throttle (intake throttle valve) position sensor 1<br>(1) SIG1 – VCC<br>(2) VCC – GND<br>(3) SIG1 – GND** | **(1) 180 Ω<br>(2) 3 kΩ<br>(3) 3 kΩ** |

**Do the measurements meet the standard value?**

**YES**

**Go to step 4.**

**NO**

**Replace the diesel throttle (intake throttle valve) position sensor 1.**
**Perform "After-inspection work" of INFORMATION section.**

## 4 Inspect the diesel throttle (intake throttle valve) position sensor 1 power supply

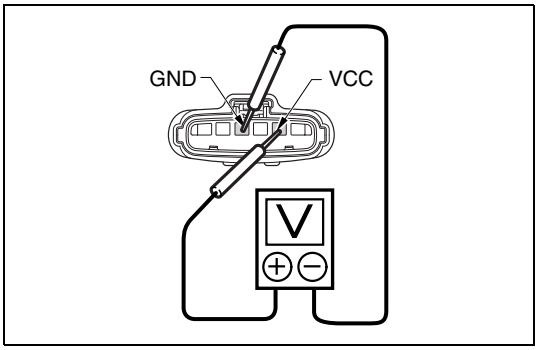


SAPH16F010300226

1. Set the starter switch to the "ON" position.
2. Use the electrical tester to measure the voltage between the terminals of the diesel throttle (intake throttle valve) position sensor 1 vehicle-side connector.

| Measurement conditions | Tester connections | Standard values |
|---|---|---|
| **Starter switch: ON** | **Diesel throttle (intake throttle valve) position sensor 1 vehicle-side connector VCC – GND** | **4.5 – 5.5 V** |

**Do the measurements meet the standard value?**

**YES**

**Go to step 5.**

**NO**

**Go to step 6.**

## 5 Inspect the diesel throttle (intake throttle valve) position sensor 1 ground circuit

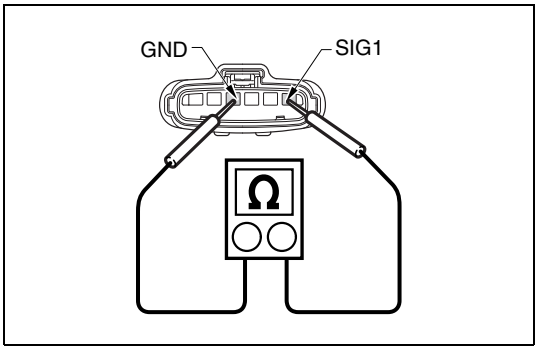


SAPH16F010300227

1. Set the starter switch to the "LOCK" position.
2. Use the electrical tester to measure the resistance between the terminals of the diesel throttle (intake throttle valve) position sensor 1 vehicle-side connector.

| Measurement conditions | Tester connections | Standard values |
|---|---|---|
| **Starter switch: LOCK** | **Diesel throttle (intake throttle valve) position sensor 1 vehicle-side connector SIG1 – GND** | **25 – 35 kΩ** |

**Do the measurements meet the standard value?**

**YES**

**Go to step 8.**

**NO**

**Go to step 6.**

| 6 | Inspect for short-circuits in the wire harness of the diesel throttle (intake throttle valve) position sensor 1 |
|---|---|

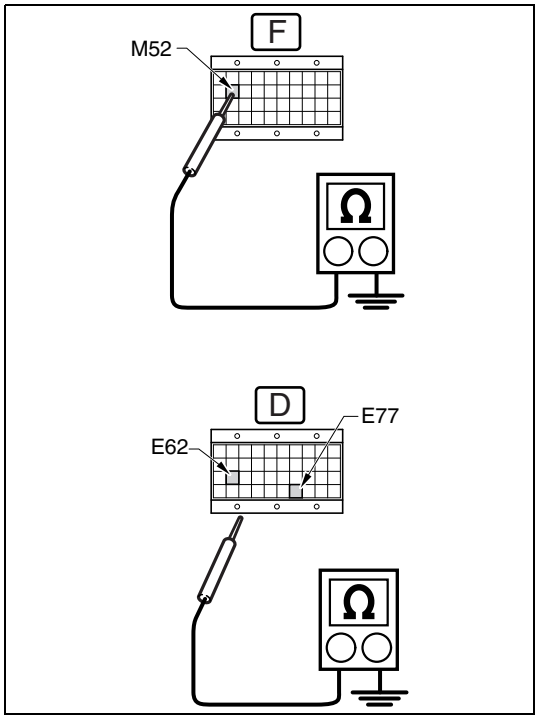

SAPH16F010300228

1. Connect the signal check harness to the engine ECU vehicle-side harness. (Do not connect the harness to the ECU.)
2. Use the electrical tester to measure the resistance between the terminals of the engine ECU (signal check harness) and ground.

| Measurement conditions | Tester connections | Standard values |
|---|---|---|
| Starter switch: LOCK | Engine ECU (signal check harness) AV4(M52) – Ground<br>DTS1(E62) – Ground<br>AG3(E77) – Ground | ∞ Ω |

**Do the measurements meet the standard value?**

**YES**

**Go to step 7.**

**NO**

**Repair or replace the harness.**
**Perform "After-inspection work" of INFORMATION section.**

| 7 | Inspect for disconnection in the wire harness of the diesel throttle (intake throttle valve) position sensor 1 |
|---|---|

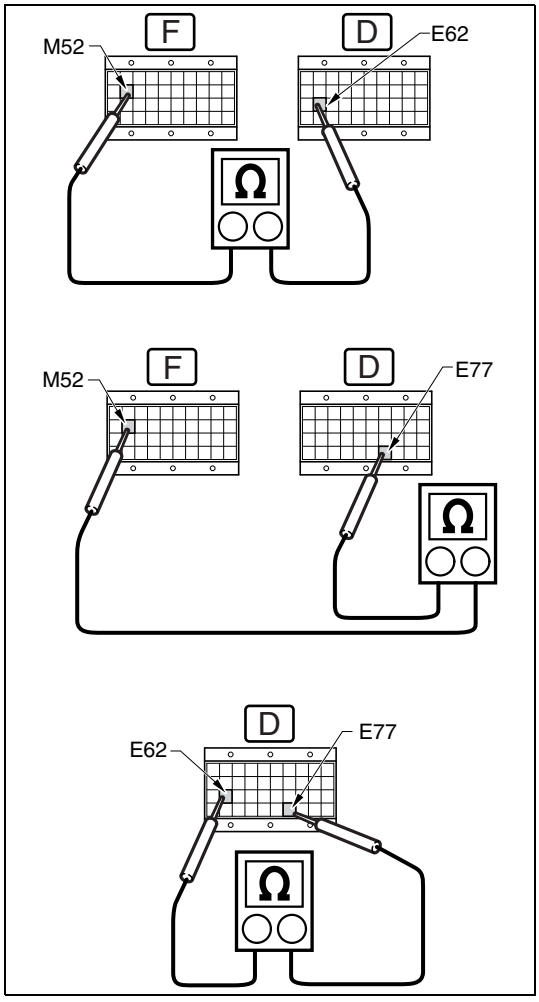


SAPH16F010300229

1. Connect the diesel throttle (intake throttle valve) position sensor 1 connector.
2. Use the electrical tester to measure the resistance between the terminal of the engine ECU (signal check harness).

| Measurement conditions | Tester connections | Standard values |
|---|---|---|
| **Starter switch: LOCK** | **Engine ECU (signal check harness)<br>(1) AV4(M52) – DTS1(E62)<br>(2) AV4(M52) – AG3(E77)<br>(3) DTS1(E62) – AG3(E77)** | **(1) 2 Ω or more<br>(2) 3 kΩ<br>(3) ∞ Ω** |

**Do the measurements meet the standard value?**

**YES**

**Go to step 8.**

**NO**

**Repair or replace the harness.**
**Perform "After-inspection work" of INFORMATION section.**

| 8 | Check the DTC detected (Engine ECU) [HINO DX ll ] |
|---|---|

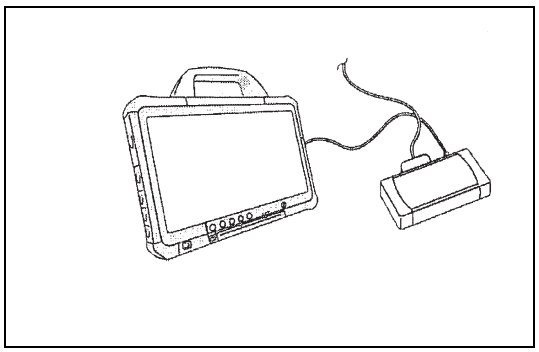

SAPH16F010300230

1. Warm-up the engine. (engine coolant temperature: 60 °C {140 °F} or more)
2. Stop the engine and set the starter switch to the "LOCK" position.
3. Connect the vehicle to HINO DX II .
4. Set the starter switch to the "ON" position.
5. Select [Engine] and check if the DTC (P0122 or P0123) has been detected.

**Has DTC (P0122 or P0123) been detected?**

**YES**

**Replace the engine ECU.**
**Perform "After-inspection work" of INFORMATION section.**

**NO**

**Procedure completed.**
**Perform "After-inspection work" of INFORMATION section.**

# DTC: P0126

EN01H16F01030F03001043

## P0126: Thermostat abnormality - Stuck in the open position after warmed-up

INFORMATION

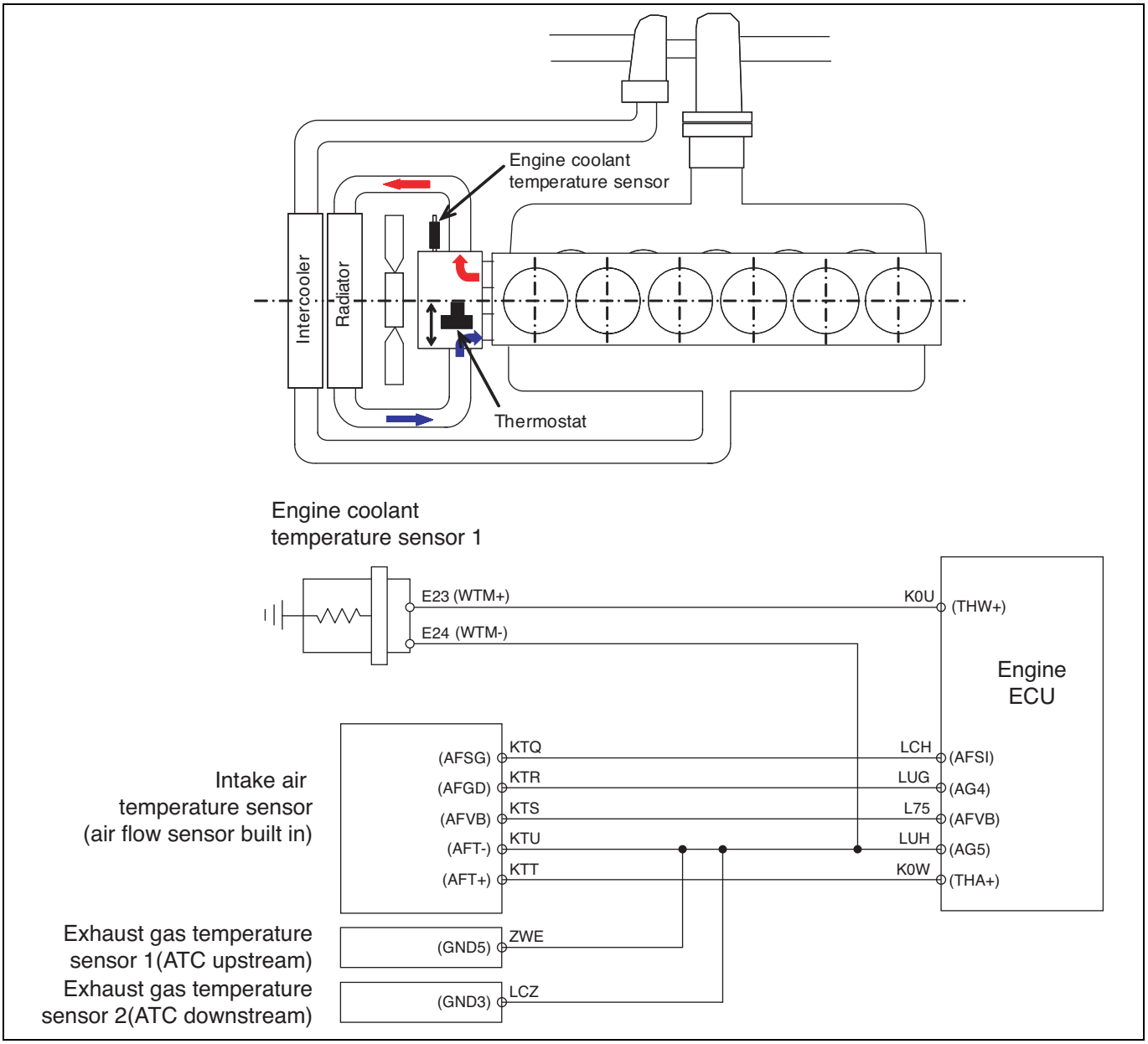


SAPH16F010300231

### 1. Technical description

- The thermostat prevents coolant from flowing into the radiator when the engine coolant temperature is less than 82 °C {179.6 °F}, in order to secure the engine warm-up function. When the temperature rises above 82 °C {179.6 °F}, the valve opens and allows coolant to flow into the radiator, thereby preventing the engine from overheating.
- If the thermostat fails and the valve stays open, overcooling causes the engine coolant temperature to drop too much, so the exhaust components that work after the engine coolant temperature has reached a certain value (warm-up) will not operate for a long time. This also becomes the cause of deterioration of the fuel efficiency and insufficient performance of the heater. The thermostat must therefore be diagnosed to see if it is working properly.

**<Description of malfunction>**

- An abnormality of the thermostat is detected when the actually measured engine coolant temperature is below a specific value, although the estimated coolant temperature is high after engine warm-up.

**2. DTC set condition**

(1) Check conditions

- Engine coolant temperature once reached over ≥ 72 °C {161.6 °F}.
- The predicted engine coolant temperature reaches over 60 °C {140.0 °F}.
- The starter key: "ON" position.
- The battery voltage is 10 V or more and 16 V or less.

Above conditions continue for 5 seconds or more.

(2) Judgment criteria

- When the actually measured engine coolant engine coolant temperature continues to be below 60 °C {140 °F} while the estimated coolant temperature after engine warm-up is 60 °C {140 °F} or higher.

**3. Reset condition**

- Immediately after normal operation is restored.

**4. Indication, warning or system control regulation when the DTC is set.**

- MIL: ON
- SVS light: ON; The engine is checked after driving.

**5. Symptoms on the vehicle when the DTC is set**

**<Symptoms on the vehicle due to backup control (fail safe function)>**

- –

**<Symptoms on the vehicle due to malfunction>**

- –

**6. Pre-inspection work**

- Check that the battery voltage is in the normal range.

**7. After-inspection work**

- Clear all past DTCs.
- Check that no DTC is detected after test drive.

**8. Estimated failure factors**

- Inclusion of foreign matters in the thermostat
- Damaged spring in the thermostat

## INSPECTION PROCEDURE: P0126

| 1 | Check the DTC detected 1 [HINO DX II ] |
|---|---|

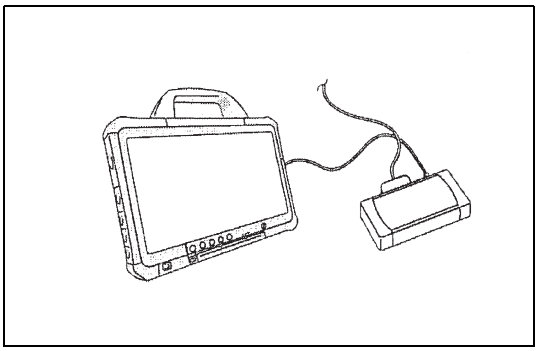

SAPH16F010300232

1. Set the starter switch to the "LOCK" position.
2. Connect the vehicle to HINO DX II .
3. Set the starter switch to the "ON" position.
4. Select [Engine] on the screen of HINO DX II and check if any DTC other than P0126 (P011A or P0111 etc.) has been detected.

**Has DTC other than P0126 (P011A or P0111 etc.) been detected?**

**YES**

**Go to diagnosis procedure of the related DTC.**

**NO**

**Go to step 2.**

| 2 | Inspect the thermostat |
|---|---|

1. Remove the thermostat from the engine.
2. Check if the thermostat is damaged due to the incursion of foreign substances or if the spring is damaged.

**Was any failure found?**

**YES**

**Replace the thermostat.**
**Perform "After-inspection work" of INFORMATION section.**

**NO**

**Go to step 3.**

| 3 | Inspect the thermostat valve-opening temperature |
|---|---|

1. Check valve opening temperature.
   Submerge in hot water (95 °C {203 °F}) and check if the valve lift is 13 mm {0.512 in.} or greater.

**Was any failure found?**

YES

**Replace the thermostat.**
**Perform "After-inspection work" of INFORMATION section.**

NO

**Go to step 4.**

| 4 | Inspect the thermostat valve-opening time |
|---|---|

1. Check valve opening time.
   After taking out from hot water, submerge in water and check that the valve closes within 5 minutes.

**Was any failure found?**

YES

**Replace the thermostat.**
**Perform "After-inspection work" of INFORMATION section.**

NO

**Go to step 5.**

| 5 | Check the DTC detected (Engine ECU) [HINO DX ll ] |
|---|---|

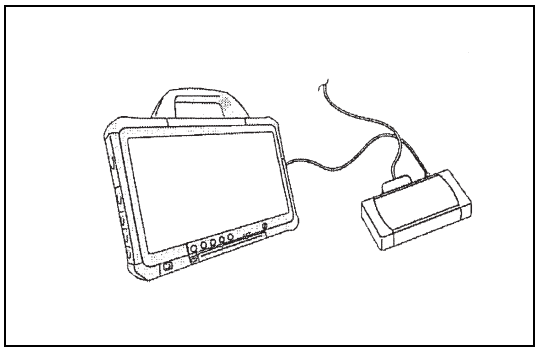

SAPH16F010300233

1. Perform engine warm-up. (engine coolant temperature: 85 °C {185 °F} or more)
2. Stop the engine and set the starter switch to the "LOCK" position.
3. Connect the vehicle to HINO DX II .
4. Set the starter switch to the "ON" position.
5. Select [Engine] and check if P0126 has been detected.

**Has DTC P0126 been detected?**

YES

**Replace the engine ECU.**
**Perform "After-inspection work" of INFORMATION section.**

NO

**Procedure completed.**
**Perform "After-inspection work" of INFORMATION section.**

# DTC: P0128

EN01H16F01030F03001044

## P0128: Thermostat - The coolant temperature does not reach a warmed-up temperature

INFORMATION

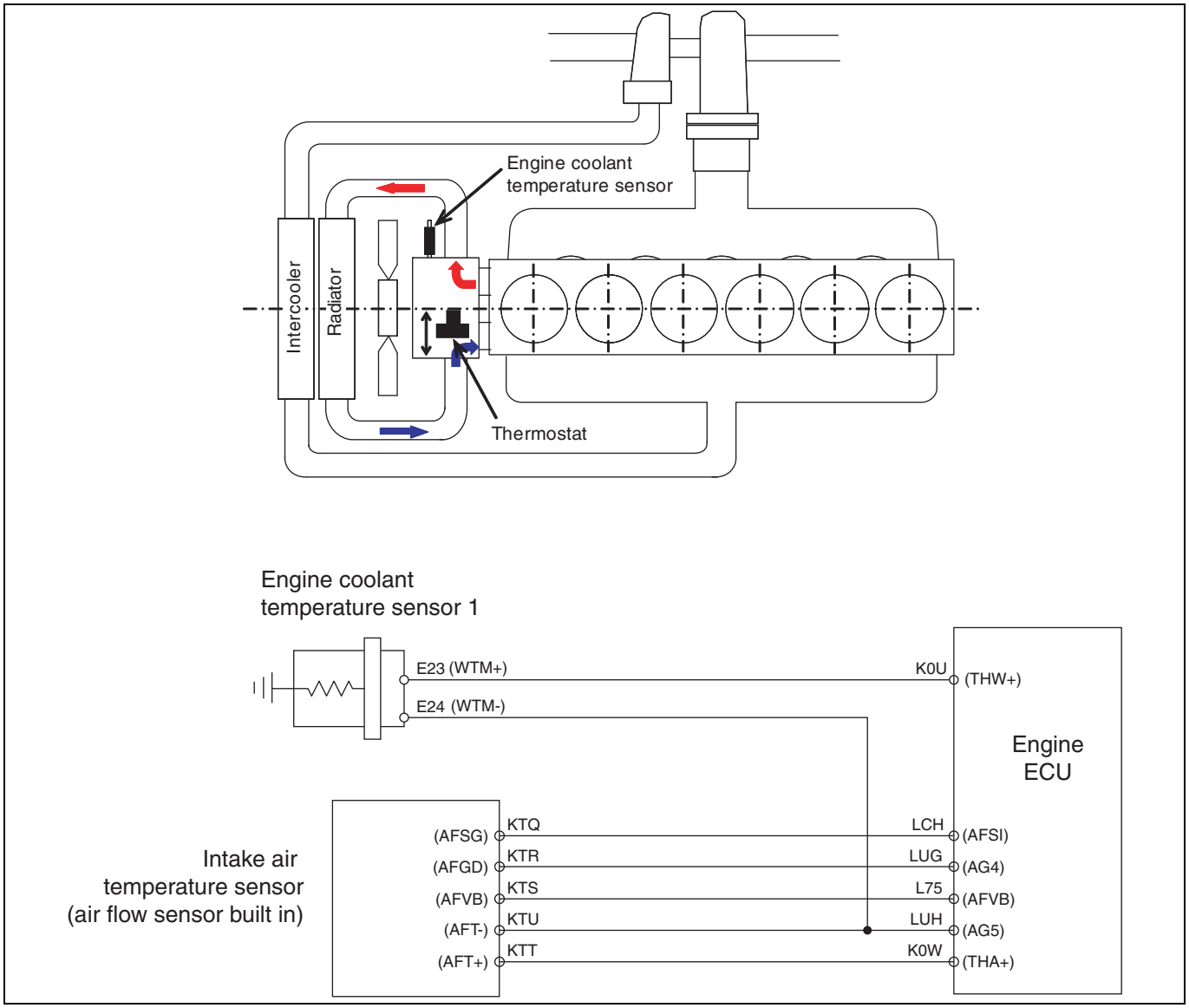


SAPH16F010300234

### 1. Technical description

- The thermostat prevents coolant from flowing into the radiator when the engine coolant temperature is less than 82 °C {179.6 °F}, in order to secure the engine warm-up function. When the temperature rises above 82 °C {179.6 °F}, the valve opens and allows coolant to flow into the radiator, thereby preventing the engine from overheating.
- If the thermostat fails and the valve stays open, it is difficult for the engine coolant temperature to rise, so the exhaust components that work after the engine coolant temperature has reached a certain value (warm-up) will not operate for a long time. The thermostat must therefore be diagnosed to see if it is working properly.

**<Description of malfunction>**

- In order to detect a malfunction of the thermostat, the above failure is determined when the actual engine coolant temperature is a certain amount lower than the predicted temperature.

**2. DTC set condition**

(1) Check conditions

- Engine speed ≥ 700 r/min
- Engine coolant temperature ≤ 52 °C {125.6 °F}.
- Engine operating time ≥ 1 minute.
- When the predicted engine coolant temperature reaches 82 °C {179.6 °F}.
  (The predicted temperature is calculated using the engine speed, fuel injection rate, EGR opening, intake temperature, and vehicle speed.)

(2) Judgment criteria

- When the engine coolant temperature ≤ 71 °C {159.8 °F}

**3. Reset condition**

- Problem does not recur in the same driving cycle.
- Normal operation is restored when in subsequent driving cycles, readings are in the normal range within the above detection conditions.
- Three driving cycles must be deemed normal for MIL to be OFF.

**4. Indication, warning or system control regulation when the DTC is set.**

- MIL: ON
- SVS light: OFF

**5. Symptoms on the vehicle when the DTC is set**

**<Symptoms on the vehicle due to backup control (fail safe function)>**

- –

**<Symptoms on the vehicle due to malfunction>**

- –

**6. Pre-inspection work**

- Check that the battery voltage is in the normal range.

**7. After-inspection work**

- Clear all past DTCs.
- Check that no DTC is detected after test drive.

**8. Estimated failure factors**

- Inclusion of foreign matters in the thermostat
- Damaged spring in the thermostat
- Engine coolant temperature sensor failure

## INSPECTION PROCEDURE: P0128

| 1 | Inspect the engine coolant temperature sensor connector |
|---|---|

1. Check the connection of the engine coolant temperature sensor connector (Looseness and poor contact).

**Was any failure found?**

**YES**

**Connect securely, repair if needed.**
**Perform "After-inspection work" of INFORMATION section.**

**NO**

**Go to step 2.**

| 2 | Inspect the engine coolant temperature sensor |
|---|---|

1. Check the installation of the engine coolant temperature sensor.
2. Make sure there is no dirt or damage to the engine coolant temperature sensor.

**Was any failure found?**

**YES**

**Clean the engine coolant temperature sensor and install it properly.**
**If damaged, replace the engine coolant temperature sensor.**
**Perform "After-inspection work" of INFORMATION section.**

**NO**

**Go to step 3.**

| 3 | Inspect the engine coolant temperature sensor unit |
|---|---|

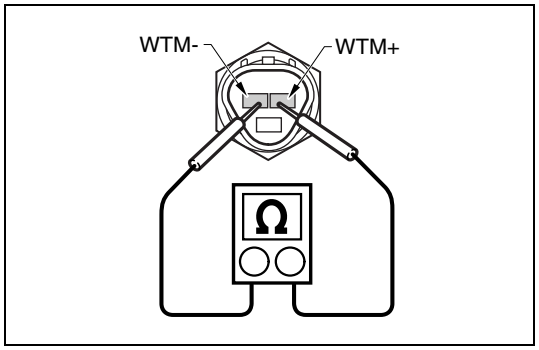

SAPH16F010300235

1. Set the starter switch to the "LOCK" position.
2. Disconnect the engine coolant temperature sensor connector.
3. Use the electrical tester to measure the resistance between the terminals of the engine coolant temperature sensor.

| Measurement conditions | Tester connections | Standard values |
|---|---|---|
| **Starter switch: LOCK** | **Engine coolant temperature sensor WTM+ – WTM-** | **20 °C {68 °F}: 2.59 – 2.32 kΩ 80 °C {176 °F}: 0.326 – 0.310 kΩ** |

**Do the measurements meet the standard value?**

**YES**

**Go to step 4.**

**NO**

**Replace the engine coolant temperature sensor.**
**Perform "After-inspection work" of INFORMATION section.**

| 4 | Inspect the thermostat |
|---|---|

1. Check if the thermostat is damaged due to the incursion of foreign substances or if the spring is damaged.

**Was any failure found?**

**YES**

**Replace the thermostat.**
**Perform "After-inspection work" of INFORMATION section.**

**NO**

**Go to step 5.**

| 5 | Inspect the thermostat valve-opening temperature |
|---|---|

1. Check valve opening temperature.
   Submerge in hot water (95 °C {203 °F}) and check if the valve lift is 13 mm {0.512 in.} or greater.

**Was any failure found?**

YES

**Replace the thermostat.**
**Perform "After-inspection work" of INFORMATION section.**

NO

**Go to step 6.**

## 6 Inspect the thermostat valve-open time

1. Check valve opening time.
   After taking out from hot water, submerge in water and check that the valve closes within 5 minutes.

**Was any failure found?**

YES

**Replace the thermostat.**
**Perform "After-inspection work" of INFORMATION section.**

NO

**Go to step 7.**

## 7 Check the DTC detected (Engine ECU) [HINO DX II ]

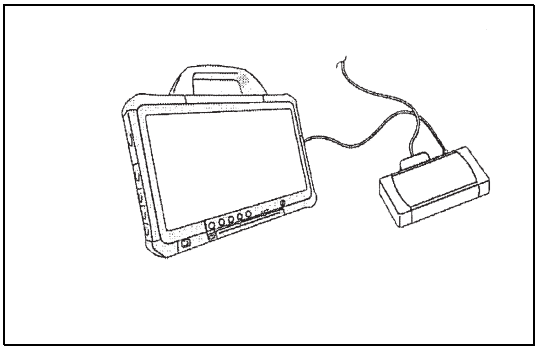

SAPH16F010300236

1. Perform engine warm-up. (engine coolant temperature: 60 °C {140 °F} or more)
2. Stop the engine and set the starter switch to the "LOCK" position.
3. Connect the vehicle to HINO DX II .
4. Set the starter switch to the "ON" position.
5. Select [Engine] and check if P0128 has been detected.

**Has DTC P0128 been detected?**

YES

**Replace the engine ECU.**
**Perform "After-inspection work" of INFORMATION section.**

NO

**Procedure completed.**
**Perform "After-inspection work" of INFORMATION section.**

# DTC: P0148

EN01H16F01030F03001045

## P0148: Abnormality in post injection

INFORMATION

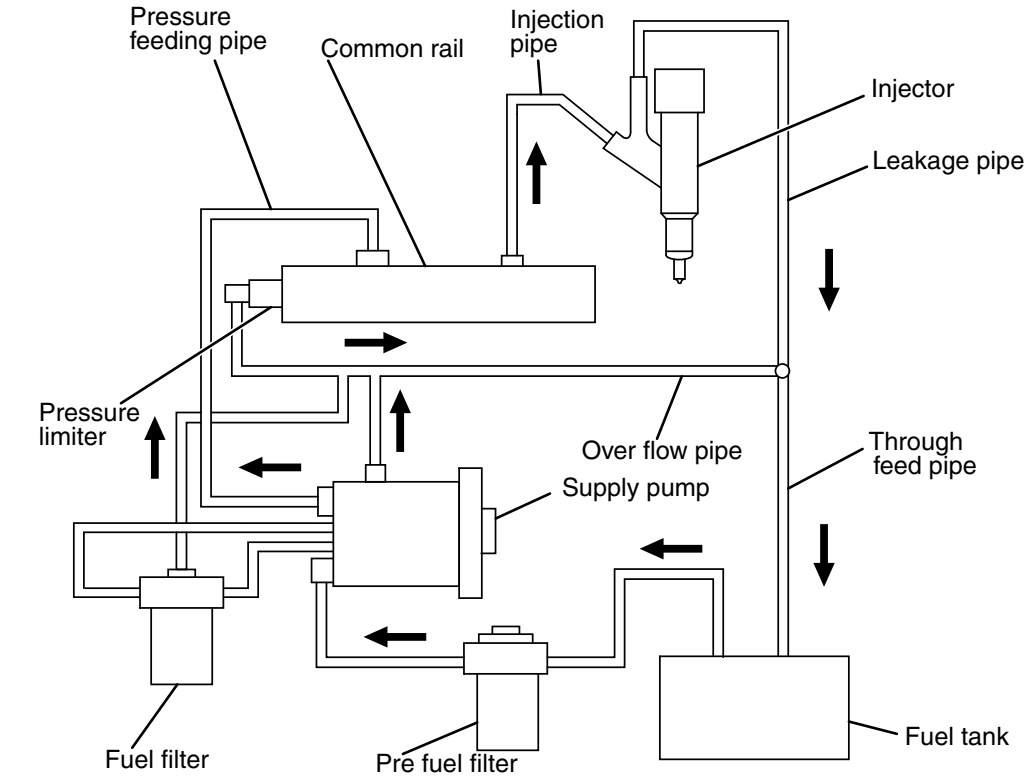


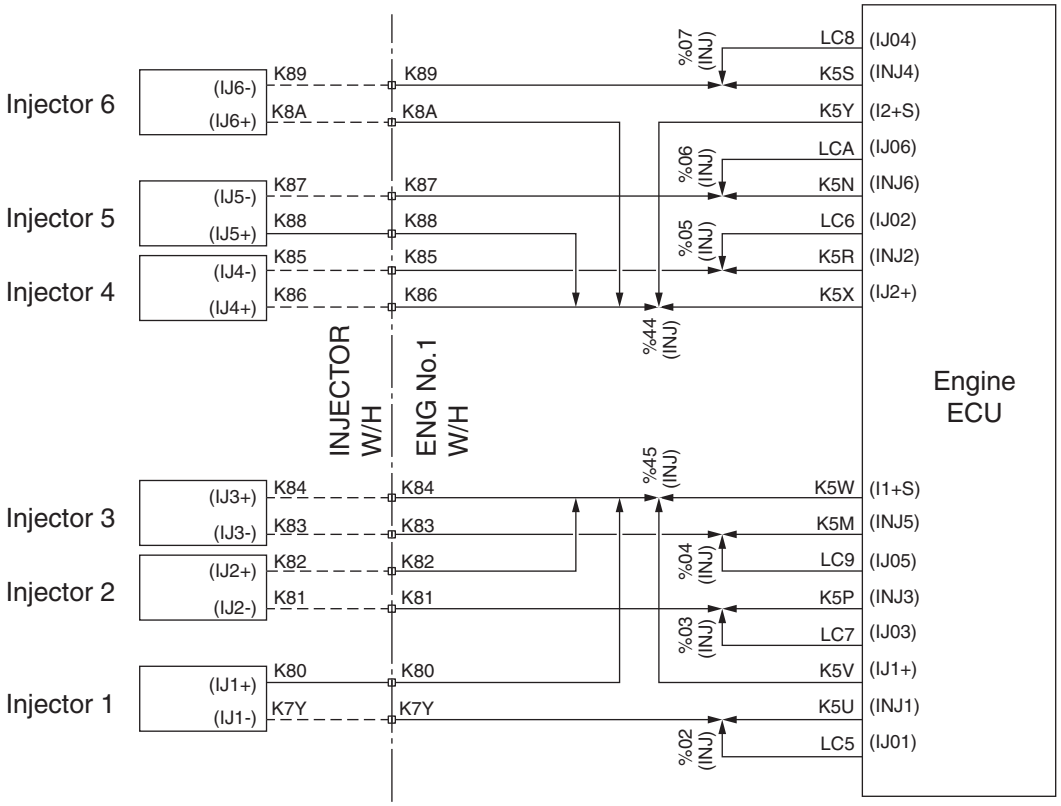


SAPH16F010300237

**1. Technical description**

**<Description of malfunction>**

- The engine ECU detected abnormality in post injection.

**2. DTC set condition**

(1) DTC detection condition

- The vehicle speed is 0 km/h {0 mph}.
- A change in the engine revolution is 938 r/min/sec or less.
- A change in the fuel injection quantity is 312 $mm^3$/st/sec or less.
- A change in the fuel pressure is 93.7 MPa/sec or less.
- The target operating current of the supply pump is not less than 1500 mA but not more than 1,800 mA.

(2) Judgment criteria

- A change in the operating current of the supply pump upon post injection falls below the specified value.
- Malfunction determination time: 10 seconds

**3. Reset condition**

- Immediately after normal status is resumed

**4. Indication, warning or system control regulation when the DTC is set.**

- MIL: ON
- SVS light: OFF

**5. Symptoms on the vehicle when the DTC is set**

**<Symptoms on the vehicle due to backup control (fail safe function)>**

- –

**<Symptoms on the vehicle due to malfunction>**

- –

**6. Pre-inspection work**

- Check that the battery voltage is in the normal range.

**7. After-inspection work**

- Clear all past DTCs.
- After starting the DPR automatic regeneration, form the DTC detection condition.
- Check that no DTC is detected after test drive.

**8. Estimated failure factors**

- Fuel injection pipe: Breakage, crack, fuel leakage
- Cylinder: Compression leakage
- Injector: Clogging, keeping injecting

## INSPECTION PROCEDURE: P0148

| 1 | Check the DTC detected 1 [HINO DX II ] |
|---|---|

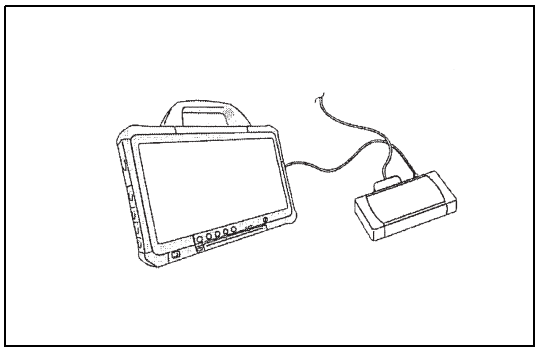

SAPH16F010300238

1. Perform the engine warm up. (engine coolant temperature: 80 °C {176 °F} or more)
2. Stop the engine and set the starter switch to the "LOCK" position.
3. Connect the vehicle to HINO DX II .
4. Set the starter switch to the "ON" position.
5. Select [Engine] on the screen of HINO DX II and check if the DTC P0148 has been detected.

**Is DTC P0148 detected as present malfunction?**

**YES**

**Go to step 2. (It is detected as present malfunction)**

**NO**

**Go to step 9. (It is recorded as past malfunction)**

| 2 | Check the DTC detected 2 [HINO DX II ] |
|---|---|

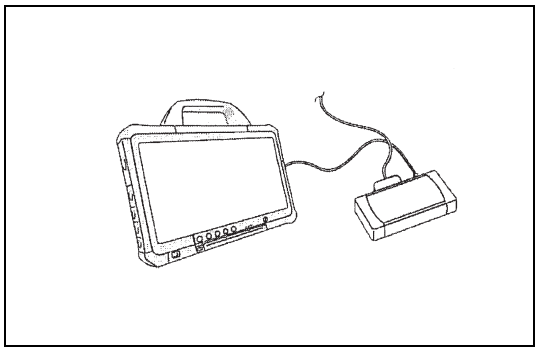

SAPH16F010300239

1. Check if the following DTC are not detected at the same time in the results of step 1.

- P0263, P0266, P0269, P0272

**Has a DTC other than P0263, P0266, P0269 and P0272 been detected?**

**YES**

**Go to diagnosis procedure of the related DTC.**

**NO**

**Go to step 3.**

| 3 | Inspect the fuel line |
|---|---|

1. Check that the fuel line has no leaks or clogging.

**<Main inspection locations>**

- Entry of foreign matter into the fuel tank
- Fuel hose breakage, collapsing, looseness
- High-pressure pipe breakage, collapsing, looseness

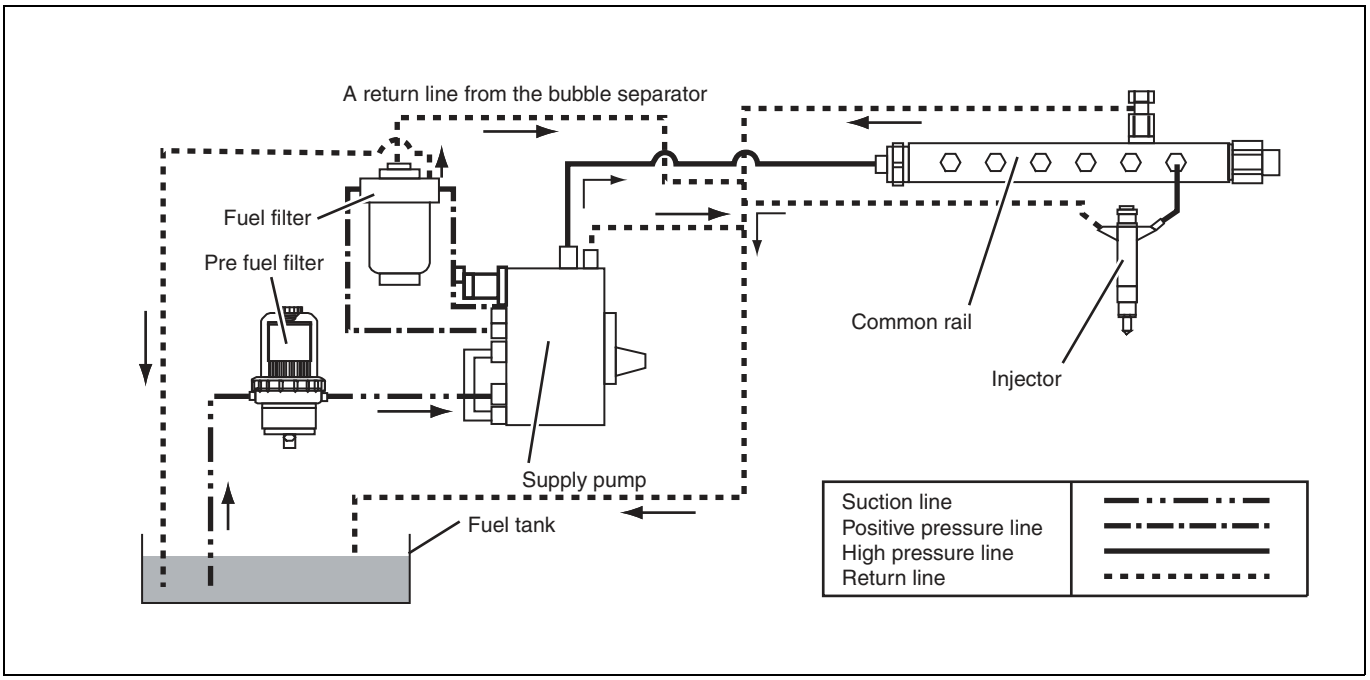


SAPH16F010300240

**Was any failure found?**

**YES**

**Repair or replace the faulty part.**
**Go to step 4 after repair or replacement.**

**NO**

**Go to step 4.**

| 4 | Inspect the pre fuel filter |
|---|---|

1. Check that the pre fuel filter is not dirty or clogged or damaged.

**Was any failure found?**

**YES**

**Replace the pre fuel filter.**
**Go to step 5 after replacement.**

**NO**

**Go to step 5.**

| 5 | Check the DTC detected 3 [HINO DX II ] |
|---|---|

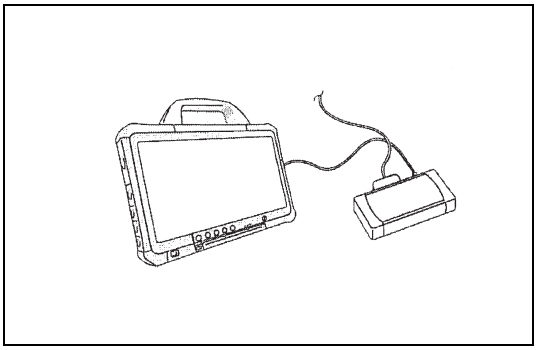

SAPH16F010300241

1. Perform the engine warm up. (engine coolant temperature: 80 °C {176 °F} or more)
2. Stop the engine.
3. Set the starter switch to the "ON" position.
4. Select [Engine] and check if the DTC (P0148) has been detected.

**Has DTC (P0148) been detected?**

**YES**

**Go to step 6.**

**NO**

**Procedure completed.**
**Perform "After-inspection work" of INFORMATION section.**

| 6 | Perform the cylinder cut-off test [HINO DX II ] |
|---|---|

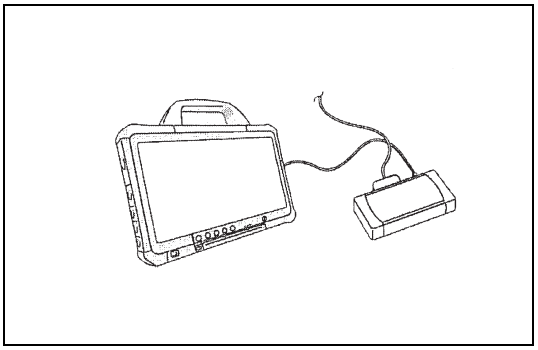

SAPH16F010300242

1. Start the engine and maintain the engine revolution at 1,500 r/min using the cruise function.
2. Check the engine sound before the test (during normal operation).
3. On the screen of the diagnostic system, select [Engine], and perform [Cut off test] in [Active test Setting].

- For the detailed procedure, refer to the separate sheet "Cut off test".

**<Cylinder cut-off test>**

- Test to determine cylinder combustion abnormality of the engine usually operated by four cylinders, according to the sound difference when the fuel injection from any one of the cylinders is stopped.

**Did you find the engine sound different?**

**YES**

**<One of the sounds A to D is always larger than others or same as α> Replace the defective injector. After replacement, go to step 7.**

**NO**

**<No clear difference> Go to step 8.**

| 7 | Check the DTC detected 4 [HINO DX II ] |
|---|---|

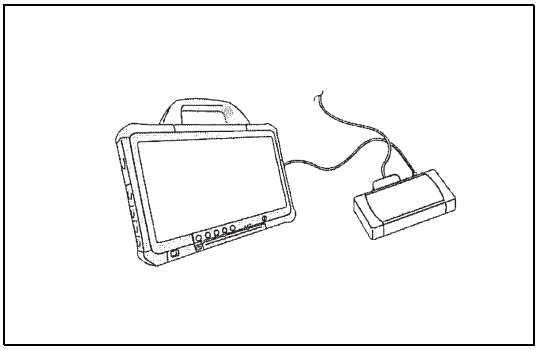

SAPH16F010300243

1. Perform the engine warm up. (engine coolant temperature: 80 °C {176 °F} or more)
2. Stop the engine.
3. Set the starter switch to the "ON" position.
4. Select [Engine] and check if the DTC (P0148) has been detected.

**Has DTC (P1048) been detected?**

**YES**

**Go to step 8.**

**NO**

**Procedure completed.**
**Perform "After-inspection work" of INFORMATION section.**

| 8 | Replace the common rail assembly [HINO DX II ] |
|---|---|

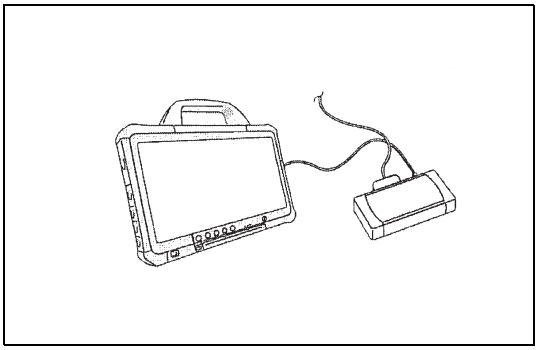

SAPH16F010300244

1. Set the starter switch to the "LOCK" position.
2. Replace common rail assembly.
3. Perform the engine warm up. (engine coolant temperature: 80 °C {176 °F} or more)
4. Stop the engine.
5. Set the starter switch to the "ON" position.
6. Select [Engine] and check if the DTC (P0148) has been detected.

**Has DTC (P0148) been detected?**

**YES**

**Go to step 9.**

**NO**

**Procedure completed.**
**Perform "After-inspection work" of INFORMATION section.**

| 9 | Check the injector clamp |
|---|---|

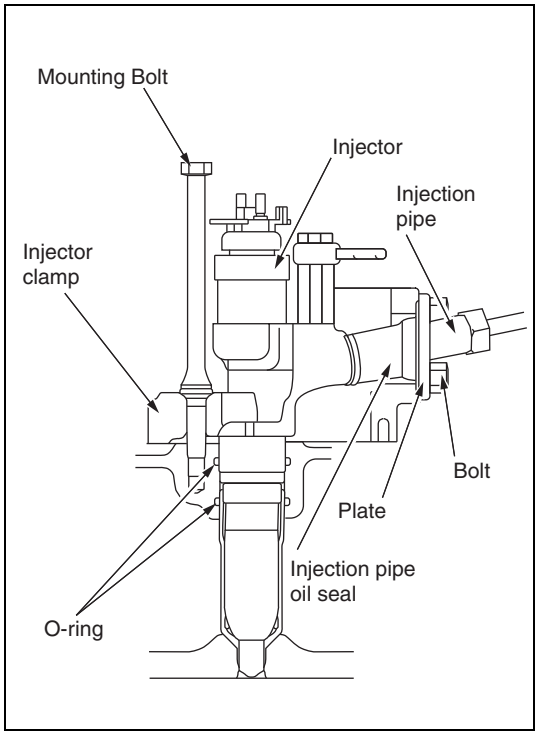


SAPH16F010300245

1. Check that the injector clamp is not loose.
2. Check that there is no "insufficient engagement" of the injector clamp claw.

**Was any failure found?**

**YES**

**Repair or replace the faulty parts.**
**Perform "After-inspection work" of INFORMATION section.**

**NO**

**Go to step 10.**

| 10 | Check the valve clearance |
|---|---|

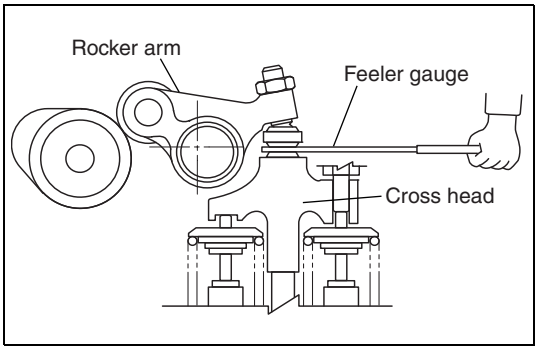


SAPH16F010300246

1. Check that the valve clearance of each cylinder is within the standard values. (Check all the valves.)

| Measurement conditions | Standard values |
|---|---|
| Cold engine | Intake valve:<br>0.30 mm (0.0118 in.)<br>Exhaust valve:<br>0.45 mm (0.0177 in.) |

| | Cylinder | | | 1 | | 2 | | 3 | | 4 | | 5 | | 6 | |
|---|---|---|---|---|---|---|---|---|---|---|---|---|---|---|---|
| | Valve | | | IN | EX | IN | EX | IN | EX | IN | EX | IN | EX | IN | EX |
| With No.1 piston at T.D.C. on compression stroke | Camshaft gear condition | 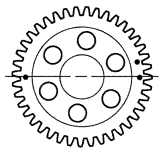 | Two drill holes and camshaft housing is horizontal. The rest of drill hole is visible. #1 | ○ | ○ | | ○ | ○ | | | ○ | ○ | | | |
| With No.6 piston at T.D.C. on compression stroke | | 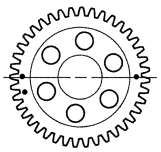 | Two drill holes and camshaft housing is horizontal. The rest of drill hole is invisible. #1 | | | ○ | | | ○ | ○ | | | ○ | ○ | ○ |

**Do the measurements meet the standard value?**

**YES**

**Go to step 11.**

**NO**

**Adjust the valve clearance.**
**Perform "After-inspection work" of INFORMATION section.**

| 11 | Check the engine compression pressure |
|---|---|

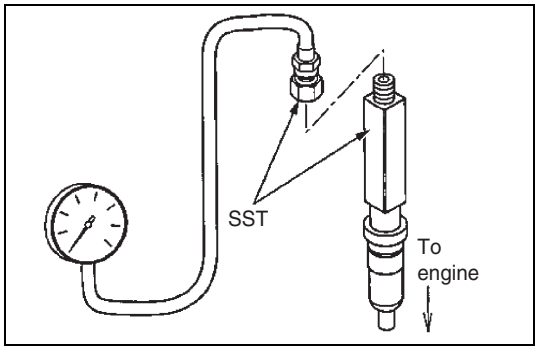

SAPH16F010300249

1. Perform an engine warm up. (engine coolant temperature: 80 °C {176 °F} or more)
2. Stop the engine.
3. Remove the all injectors.
4. Set the special service tool (SST) and measure the compression.

| Measurement conditions | Standard values |
|---|---|
| **Engine revolution: 150 r/min** | **Standard values: 3.2-3.4 MPa {33-35 kgf/cm$^2$} Limit: 2.3 MPa {24 kgf/cm$^2$}** |

**Do the measurements meet the standard value?**

**YES**

**Go to step 12.**

**NO**

**Engine overhaul.**
**Perform "After-inspection work" of INFORMATION section.**

| 12 | Inspect the engine speed main sensor (Crankshaft position sensor) |
|---|---|

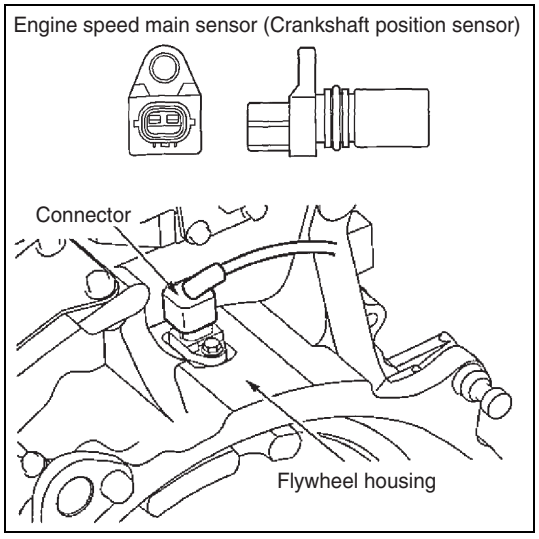

SAPH16F010300250

1. Inspect the condition of engine speed main sensor (crankshaft position sensor) connector (looseness or poor contact).
2. Check the installation of the engine speed main sensor. (Crankshaft position sensor)

**Was any failure found?**

**YES**

**Repair or replace the faulty parts.**
**Perform "After-inspection work" of INFORMATION section.**

**NO**

**Go to step 13.**

| 13 | Check the DTC detected 5 [HINO DX II ] |
|---|---|

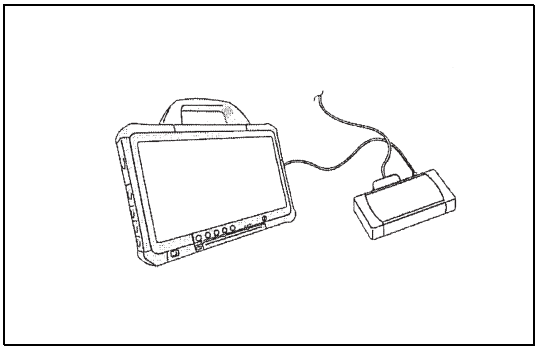

SAPH16F010300251

1. Perform an engine warm up. (engine coolant temperature: 80 °C {176 °F} or more)
2. Stop the engine
3. Set the starter switch to the "ON" position.
4. Select [Engine] on the screen of HINO DX II and check if the DTC P0148 has been detected.

**Has DTC (P0148) been detected?**

**YES**

**Inspect the crankshaft, connecting rods, flywheel, and other parts of the drive system. Perform "After-inspection work" of INFORMATION section.**

**NO**

**Procedure completed. Perform "After-inspection work" of INFORMATION section.**

## Cylinder cut off test

**<Cylinder cut-off test>**
Test to determine cylinder combustion abnormality of the engine usually operated by four cylinders, according to the sound difference when the fuel injection from any one of the cylinders is stopped

**<Purpose>**
To determine combustion abnormality of the arbitrary cylinder according to sound difference.

**<Know-how & examples>**
Combustion abnormality of the arbitrary cylinder is determined according to sound difference to take proper measures.

| 1 | Cylinder cut-off test |
|---|---|

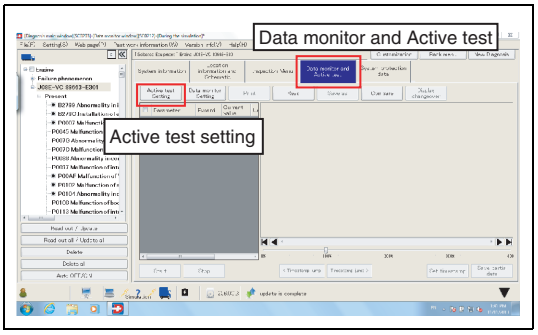


SAPH16F010300252

1. Start the engine and maintain the engine revolution at 1,500 r/min using the cruise function.
2. Check the engine sound before the test (during normal operation). (Assume α as the sound.)
3. On the screen of the diagnostic system, select [Engine], and perform [Cut off test] in [Active test Setting].

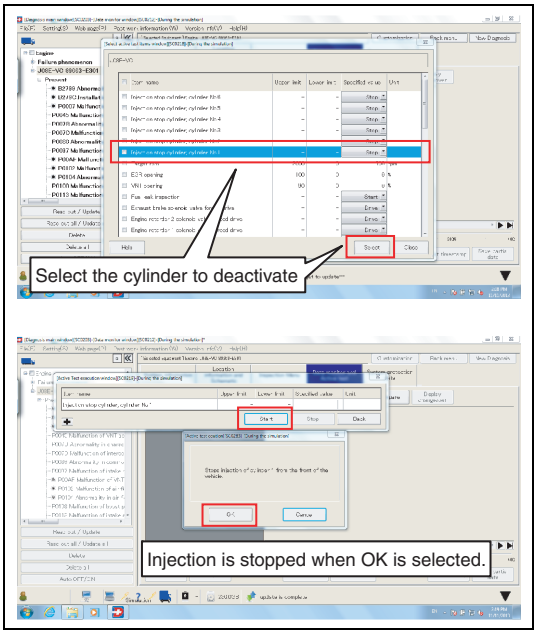


SAPH16F010300253

4. Stop the fuel injection of the cylinder #1 to check the engine sound. (Assume A as the sound.) → After checking, stop the test.

**HINT**
**Because the engine maintains the rotation condition by three-cylinder fuel injection instead of four-cylinder fuel injection during the test, the sound A becomes larger than α. (This is not abnormal.)**

5. As the cylinder #1, stop the fuel injection of the cylinders #2, #3, and #4 in this order.
(Assume B, C, and D as the measured sounds respectively.)

**HINT**

- **If sound abnormality is not clear, repeat the steps 4 and 5.**
- **If any of the sounds A to D is same as α, make sure to check for communication abnormality.**

**Can engine sound difference be identified?**

**YES**

**<One of the sounds A to D is always larger than others or same as α. >**
**Replace the defective injector.**

**NO**

**<No clear difference>**
**Go to inspection.**

# DTC: P016E and P016F

EN01H16F01030F03001046

## P016E: Fuel system pressure control - high

INFORMATION

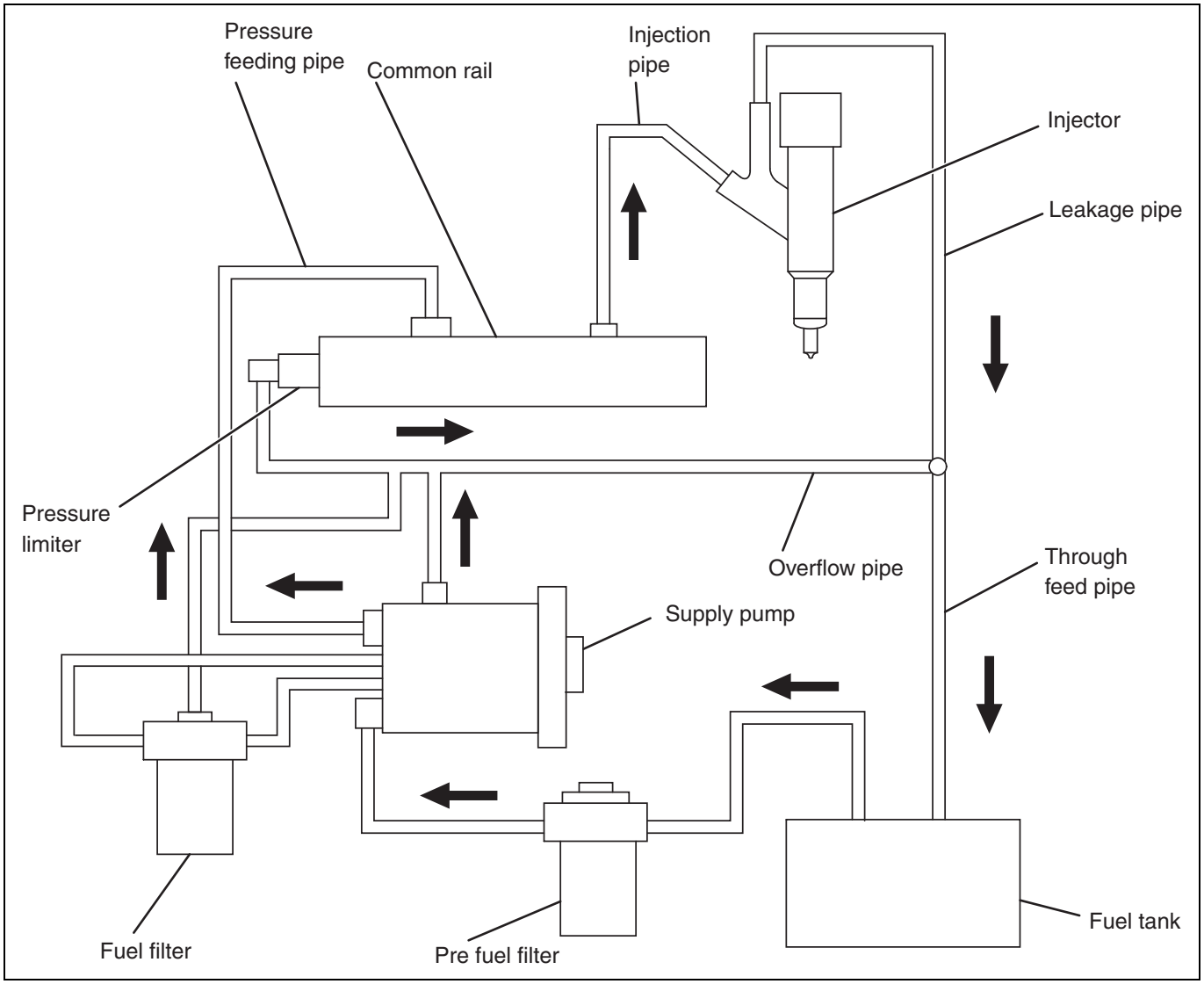


SAPH16F010300254

**1. Technical description**

- The common rail pressure is controlled by the discharge of the supply pump.
- The supply pump discharge quantity is adjusted by the SCV (suction control valve).

**<Description of malfunction>**

- Abnormally high fuel pressure inside common rail is detected.

**2. DTC set condition**

(1) DTC detection condition

- Starter switch ON.
- Engine speed ≥ 700 r/min.
- Fuel injection quantity ≥ 5 $mm^3$/st. cyl.
- Fuel injection quantity fluctuation < -26.6 $mm^3$/st. cyl.
- Target current value of SCV ≤ 1,500 mA.
- No supply pump-related DTC is detected.

The above conditions continue for at least 10 seconds.

(2) Judgment criteria

- (Actual common rail pressure – target common rail pressure) ≥ 15 MPa for 15 seconds.

**3. Reset condition**

- After normal operation is restored and the starter switch is on the "LOCK" position.

**4. Indication, warning or system control regulation when the DTC is set.**

- MIL: ON
- SVS light: OFF
- Engine output is restricted.
- Cruise control function is not available.

**5. Symptoms on the vehicle when the DTC is set**

**<Symptoms on the vehicle due to backup control (fail safe function)>**

- Engine output is insufficient.
- Cruise control does not work.

**<Symptoms on the vehicle due to malfunction>**

- –

**6. Pre-inspection work**

- Check that the battery voltage is in the normal range.

**7. After-inspection work**

- Clear all past DTCs.
- Check that no DTC is detected after test drive.

**8. Estimated failure factors**

- Pre fuel filter: clogged
- Common rail pressure sensor: faulty contact (power supply fault or GND fault), sensor failure
- Supply pump: SCV fault, learning value fault
- Common rail: pressure limiter valve open
- Harness-related malfunction: faulty contact or wrong connection in crankshaft position sensor (engine speed main sensor) or camshaft position sensor (engine speed sub sensor)

## P016F: Fuel system pressure control - low

INFORMATION

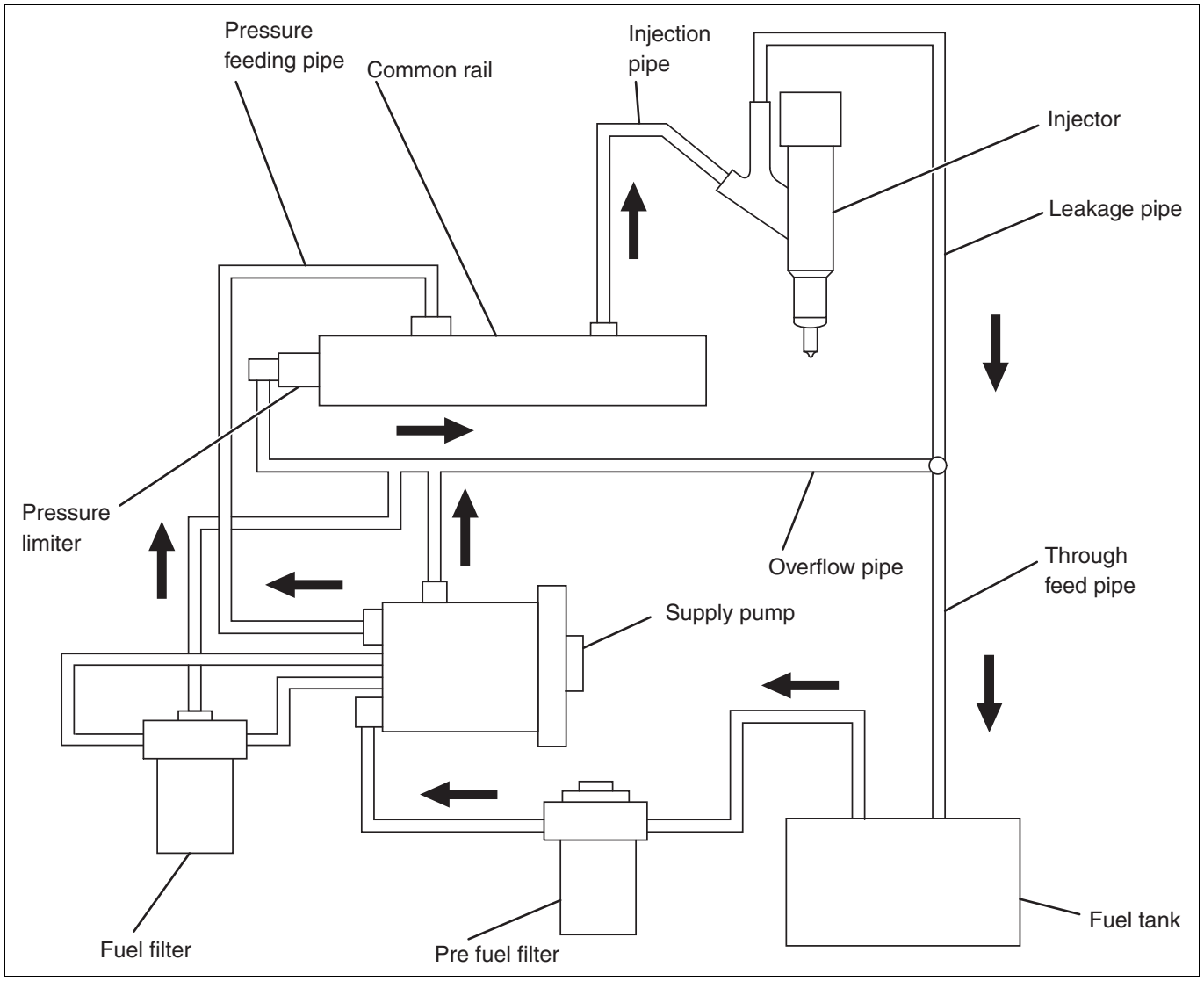


SAPH16F010300255

**1. Technical description**

- The common rail pressure is controlled by the discharge of the supply pump.
- The supply pump discharge quantity is adjusted by the SCV (suction control valve).

**<Description of malfunction>**

- Abnormally high fuel pressure inside common rail is detected.

**2. DTC set condition**

(1) DTC detection condition

- Starter switch ON.
- Engine speed ≥ 700 r/min.
- Fuel injection quantity ≥ 5 $mm^3$/st. cyl.
- Fuel injection quantity fluctuation < 78.1 $mm^3$/st. cyl.
- Target current value of SCV ≤ 1,970mA.
- No fuel pump-related DTC is detected.

The above conditions continue for at least 5 seconds.

(2) Judgment criteria

- (Actual common rail pressure – target common rail pressure) ≤ -15 MPa for 15 seconds.

**3. Reset condition**

- After normal operation is restored and the starter switch is on the "LOCK" position.

**4. Indication, warning or system control regulation when the DTC is set.**

- MIL: ON
- SVS light: OFF
- Engine output is restricted.
- Cruise control function is not available.
- Idling stop system is not available.
- Vehicle start control is not available.

**5. Symptoms on the vehicle when the DTC is set**

**<Symptoms on the vehicle due to backup control (fail safe function)>**

- Engine output is insufficient.
- Cruise control does not work.
- Idling stop system does not work.
- Vehicle start control does not work.

**<Symptoms on the vehicle due to malfunction>**

- –

**6. Pre-inspection work**

- Check that the battery voltage is in the normal range.

**7. After-inspection work**

- Clear all past DTCs.
- Check that no DTC is detected after test drive.

**8. Estimated failure factors**

- Pre fuel filter: clogged
- Common rail pressure sensor: faulty contact (power supply fault or GND fault), sensor failure
- Supply pump: SCV fault, learning value fault
- Common rail: pressure limiter valve open
- Harness-related malfunction: faulty contact or wrong connection in crankshaft position sensor (engine speed main sensor) or camshaft position sensor (engine speed sub sensor)

## INSPECTION PROCEDURE: P016E and P016F

| 1 | Inspect the start of the engine |
|---|---|

1. Inspect the start of the engine.

**Does the engine start?**

**YES** → **Go to step 4.**

**NO** → **Go to step 2.**

| 2 | Inspect the supply pump |
|---|---|

1. Check if fuel is leaking or seeping out of the supply pump.

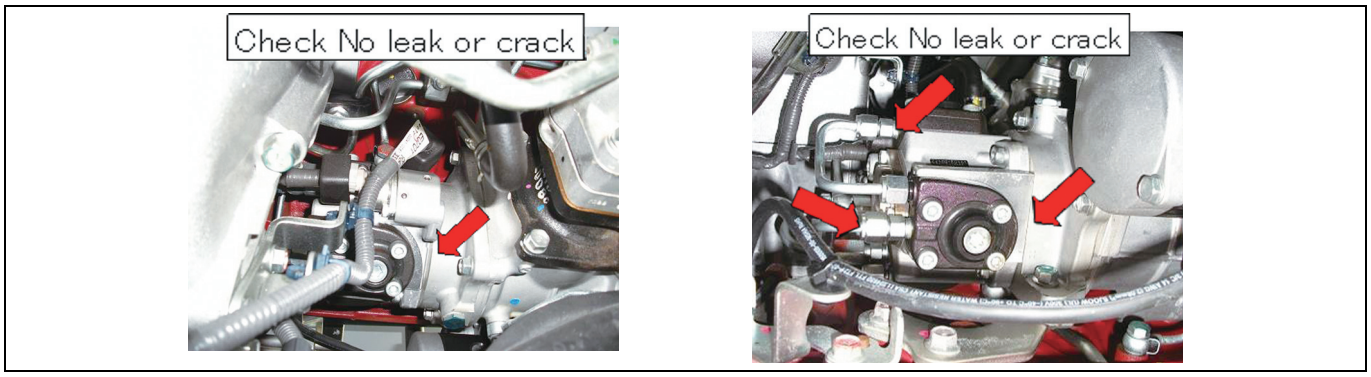


SAPH16F010300256

**Was any failure found?**

**YES** → **Replace the supply pump, and go to step 4.**

**NO** → **Go to step 3.**

| 3 | Function check of supply pump [HINO DX II ] |
|---|---|

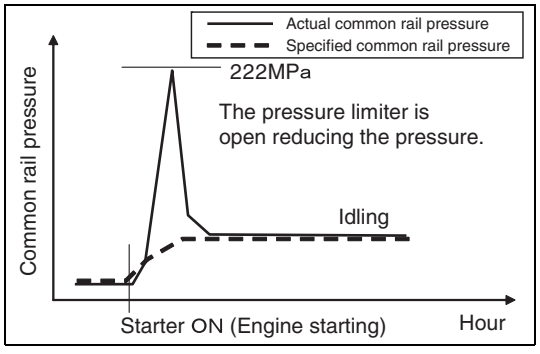


SAPH16F010300257

1. Connect the vehicle to HINO DX II .
2. Set the starter switch to the "ON" position.
3. Select [Engine].
4. Select [Actual common rail pressure] from the [Data monitor Setting] menu.
5. Start the engine while checking the common rail pressure.

| Standard values |
|---|
| **The actual common rail pressure rises and stabilizes at a constant value.** |

**Was any failure found?**

**YES**

**Replace the supply pump, and go to step 4.**

**NO**

**Contact the Hino national service manager.**

## 4 Check the engine ECU

1. Check the engine ECU software part number (ECU part number) by HINO DX II .
   Confirm the latest part number with Hino national service manager.

**Does the engine ECU have the latest software number?**

**YES**

**Go to step 5.**

**NO**

**Reprogram the engine ECU by using HINO DX II and then go to step 5.**

## 5 Inspect the pre fuel filter

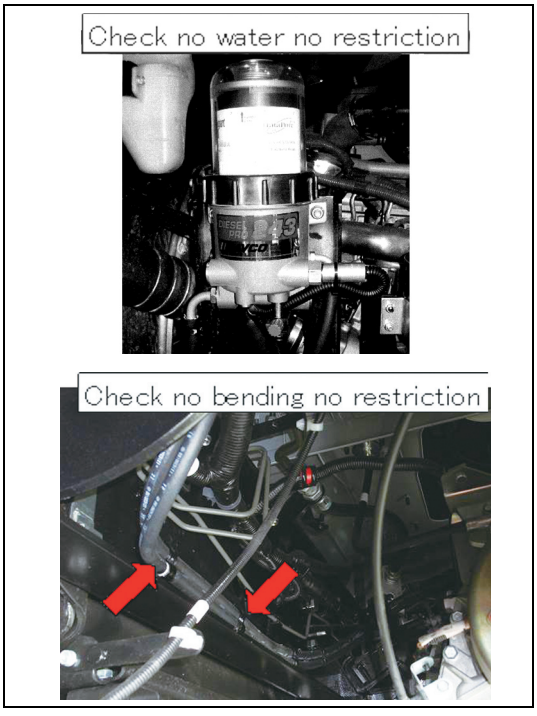


SAPH16F010300258

1. Inspect the pre fuel filter.
- Has the replacement period expired?
- Is it dirty, damaged, or clogged?
- Is it a genuine Hino part?

2. Check if the fuel inside the pre fuel filter is within the standard value.

| Measurement conditions | Standard values |
|---|---|
| **While engine is running** | • **At least 25.4 mm {1 in.} above collar and below the element upper level.**<br>• **Fuel level does not continue to drop during wide open throttle.** |

**Was any failure found?**

YES

**Replace the fuel filter element, and go to step 6.**

NO

**Go to step 11.**

| 6 | **Inspect the fuel pipe** |
|---|---|

1. Check if the fuel pipe and hose between the fuel tank and pre fuel filter are clogged, punctured, or bent.
2. Make sure the fuel pipe joint bolts are not loose.

**Was any failure found?**

YES

**Repair or replace the faulty part, and go to step 7.**

NO

**Go to step 7.**

| 7 | **Inspect the fuel tank breather** |
|---|---|

1. Check if the breather hose is clogged, punctured, or bent.
2. Make sure the check valve is functioning normally.

**Was any failure found?**

YES

**Repair or replace the faulty part, and go to step 8.**

NO

**Go to step 8.**

| 8 | **Inspect the fuel tank feed pipe** |
|---|---|

1. Make sure the fuel tank feed pipe is not clogged.

**Was any failure found?**

YES

**Repair or replace the faulty part, and go to step 9.**

NO

**Go to step 9.**

| 9 | Inspect the fuel tank |
|---|---|

1. Drain fuel out of the fuel tank and check if there are foreign objects inside the tank.

**Was any failure found?**

| YES | NO |
|---|---|
| **Remove the foreign objects and clean the fuel tank.<br>Then go to step 10.** | **Go to step 10.** |

| 10 | Inspect the supply pump gauze filter |
|---|---|

1. Make sure the gauze filter (built into the supply pump) is not clogged.

**Was any failure found?**

| YES | NO |
|---|---|
| **Clean the gauze filter, and go to step 11.** | **Go to step 11.** |

| 11 | Inspect the fuel high-pressure pipe. |
|---|---|

1. Make sure the fuel high-pressure pipe is not leaking fuel.

**Was any failure found?**

| YES | NO |
|---|---|
| **Repair or replace the faulty part, and go to step 12.** | **Go to step 12.** |

| 12 | Inspect the fuel filter |
|---|---|

1. Make sure the fuel filter is not clogged.

**Was any failure found?**

| YES | NO |
|---|---|
| **Repair or replace the faulty part, and go to step 13.** | **Go to step 13.** |

| 13 | Inspect the SCV connector |
|---|---|

1. Check the connection of the SCV connector (Looseness and poor contact).

**Was any failure found?**

| YES | NO |
|---|---|
| **Repair or replace the faulty part, and go to step 14.** | **Go to step 14.** |

| 14 | Inspect the common rail pressure sensor connector |
|---|---|

1. Check the connection of the common rail pressure sensor connector (Looseness and poor contact).

**Was any failure found?**

| YES | NO |
|---|---|
| **Repair or replace the faulty part, and go to step 15.** | **Go to step 15.** |

| 15 | Inspect the common rail pressure sensor power supply |
|---|---|

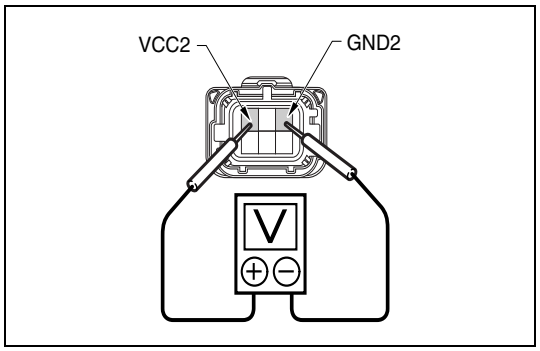


SAPH16F010300259

1. Disconnect the common rail pressure sensor connector.
2. Set the starter switch to the "ON" position.
3. Use the electrical tester to measure the voltage between the terminals of the common rail pressure sensor vehicle-side connector.

| Measurement conditions | Tester connections | Standard values |
|---|---|---|
| **Starter switch: ON** | **Common rail pressure sensor vehicle-side connector VCC2 – GND2** | **4.5 – 5.5 V** |

**Do the measurements meet the standard value?**

| YES | NO |
|---|---|
| **Go to step 16.** | **Repair the common rail pressure sensor power supply circuit and then go to step 16.** |

| 16 | Inspect the crankshaft position sensor (engine speed main sensor) [HINO DX ll ] |
|---|---|

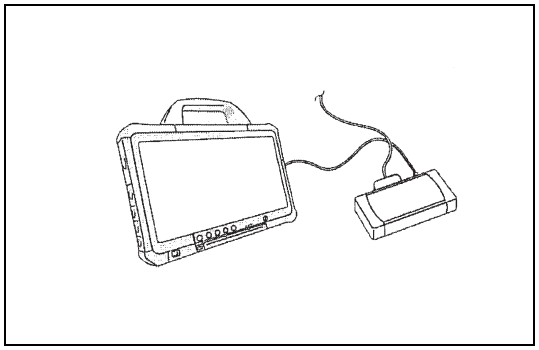

SAPH16F010300260

1. Set the starter switch to the "ON" position.
2. Select [Engine].
3. Select [NE Active identification], [G Active identification] in [Data monitor Setting] menu.
4. Start the engine and confirm that the engine main speed sensor (NE) and sub speed sensor (G) operate (stay ON) continuously.

**Was any failure found?**

**YES**

**Check any faulty sensor and repair or replace it as needed.**
**After inspection, go to step 17.**

**NO**

**Go to step 17.**

| 17 | Inspect the fuel return pipe and hose |
|---|---|

1. Check if the fuel return pipe and hose are clogged.

**Was any failure found?**

**YES**

**Repair or replace the faulty part.**
**Perform "After-inspection work" of INFORMATION section.**

**NO**

**Procedure completed.**
**Perform "After-inspection work" of INFORMATION section.**

# DTC: P0182 and P0183

EN01H16F01030F03001047

## P0182: Fuel temperature sensor Low

INFORMATION

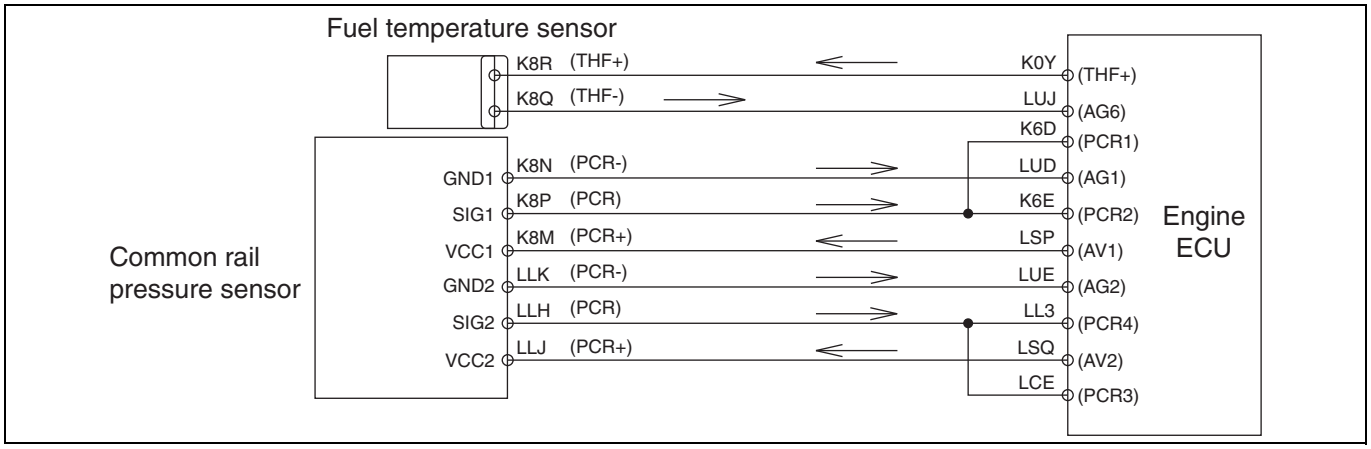


SAPH16F010300261

**1. Technical description**

- The fuel temperature sensor consistently measures fuel temperature.
- The fuel temperature sensor is installed to the supply pump.

**<Description of malfunction>**

- The fuel temperature cannot be correctly recognized.

**2. DTC set condition**

(1) DTC detection condition

- Starter switch is inactive to the "ON" position.
- Battery voltage is in the range of 10 V to 16 V.

The conditions described above remain for 5 seconds or longer.

(2) Judgment criteria

- Output of the fuel temperature sensor remains at 0.1 V or less for 3 seconds or longer.

**3. Reset condition**

- After restoration to normal condition.

**4. Indication, warning or system control regulation when the DTC is set.**

- MIL: OFF
- SVS light: ON

**5. Symptoms on the vehicle when the DTC is set**

**<Symptoms on the vehicle due to backup control (fail safe function)>**

- –

**<Symptoms on the vehicle due to malfunction>**

- –

**6. Pre-inspection work**

- Check that the battery voltage is in the normal range.

**7. After-inspection work**

- Clear all past DTCs.
- Check that no DTC is stored after test drive.

**8. Estimated failure factors**

- Irregular contact (wet of connector)
- Abnormal resistance of sensor
- Harness disconnection or short-circuit
- Engine ECU sensor power supply failure or internal circuit failure
- Faulty connector contact or fit

## P0183: Fuel temperature sensor High

INFORMATION

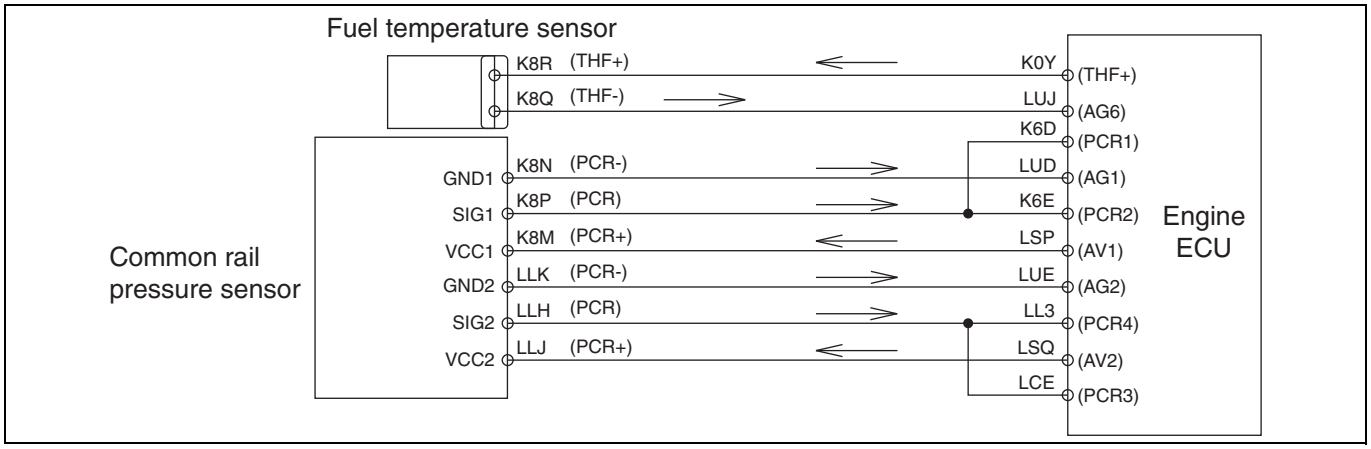


SAPH16F010300262

**1. Technical description**

- The fuel temperature sensor consistently measures fuel temperature.
- The fuel temperature sensor is installed to the supply pump.

**<Description of malfunction>**

- The fuel temperature cannot be correctly recognized.

**2. DTC set condition**

(1) DTC detection condition

- Starter switch ON.
- Battery voltage is in the range of 10 V to 16 V.

The conditions described above remain for 5 seconds or longer.

(2) Judgment criteria

- Output of the fuel temperature sensor remains at 4.85 V or greater for 3 seconds or longer.

**3. Reset condition**

- After restoration to normal condition.

**4. Indication, warning or system control regulation when the DTC is set.**

- MIL: OFF
- SVS light: ON

**5. Symptoms on the vehicle when the DTC is set**

**<Symptoms on the vehicle due to backup control (fail safe function)>**

- –

**<Symptoms on the vehicle due to malfunction>**

- –

**6. Pre-inspection work**

- Check that the battery voltage is in the normal range.

**7. After-inspection work**

- Clear all past DTCs.
- Check that no DTC is stored after test drive.

**8. Estimated failure factors**

- Irregular contact (disconnection or poor fit) of the sensor connector
- Abnormal resistance of sensor
- Harness disconnection or short-circuit
- Engine ECU sensor power supply failure or internal circuit failure
- Faulty connector contact or fit

## INSPECTION PROCEDURE: P0182 and P0183

| 1 | Inspect the fuel temperature sensor connector |
|---|---|

1. Check the connection of the fuel temperature sensor connector (Looseness and poor contact).

**Was any failure found?**

**YES**

**Connect securely, repair if needed.**
**Perform "After-inspection work" of INFORMATION section.**

**NO**

**Go to step 2.**

| 2 | Inspect the fuel temperature sensor |
|---|---|

1. Check the installation of the fuel temperature sensor.
2. Make sure there is no dirt or damage to the fuel temperature sensor.

**Was any failure found?**

**YES**

**Clean the fuel temperature sensor and install it properly.**
**If damaged, replace the fuel temperature sensor.**
**Perform "After-inspection work" of INFORMATION section.**

**NO**

**Go to step 3.**

| 3 | Inspect the fuel temperature sensor unit |
|---|---|

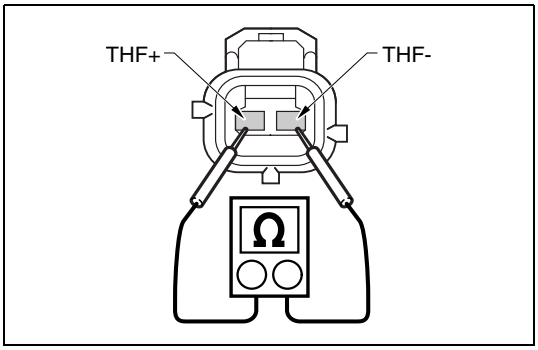

SAPH16F010300263

1. Set the starter switch to the "LOCK" position.
2. Disconnect the connector of the fuel temperature sensor connector.
3. Use the electrical tester to measure the resistance between the terminals of the fuel temperature sensor connector.

| Measurement conditions | Tester connections | Standard values |
|---|---|---|
| **Starter switch: LOCK** | **Fuel temperature sensor THF+ – THF-** | **20 °C {68 °F}: 2.32 – 2.59 kΩ 80 °C {176 °F}: 0.310 – 0.326 kΩ** |

**Do the measurements meet the standard value?**

**YES**

**Go to step 4.**

**NO**

**Replace the fuel temperature sensor.**
**Perform "After-inspection work" of INFORMATION section.**

## 4 Inspect for short-circuits in wire harness of fuel temperature sensor

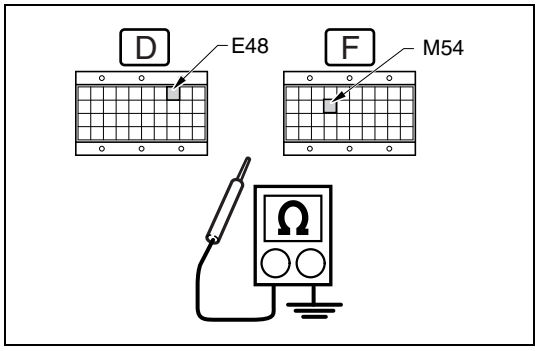


SAPH16F010300264

1. Set the starter switch to the "LOCK" position.
2. Connect the signal check harness to the engine ECU vehicle-side harness. (Do not connect the harness to the ECU.)
3. Use the electrical tester to measure the resistance between the terminal of the engine ECU (signal check harness) and ground.

| Measurement conditions | Tester connections | Standard values |
|---|---|---|
| Starter switch: LOCK | Engine ECU (signal check harness) THF+(E48) – Ground AG6(M54) – Ground | ∞ Ω |

**Do the measurements meet the standard value?**

**YES**

**Go to step 5.**

**NO**

**Repair or replace the harness.**
**Perform "After-inspection work" of INFORMATION section.**

## 5 Inspect disconnection of the fuel temperature sensor harness

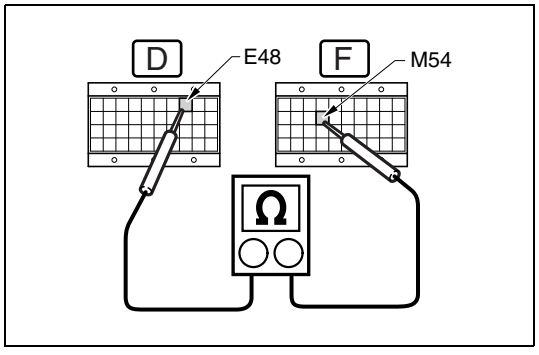


SAPH16F010300265

1. Connect the connector of the fuel temperature sensor.
2. Use the electrical tester to measure the resistance between the terminals of the engine ECU (signal check harness).

| Measurement conditions | Tester connections | Standard values |
|---|---|---|
| Starter switch: LOCK | Engine ECU (signal check harness) THF+(E48) – AG6(M54) | 20 °C {68 °F}: 2.32 – 2.59 kΩ 80 °C {176 °F}: 0.310 – 0.326 kΩ |

**Do the measurements meet the standard value?**

**YES**

**Go to step 6.**

**NO**

**Repair or replace the harness.**
**Perform "After-inspection work" of INFORMATION section.**

## 6 Check the DTC detected (Engine ECU) [HINO DX II ]

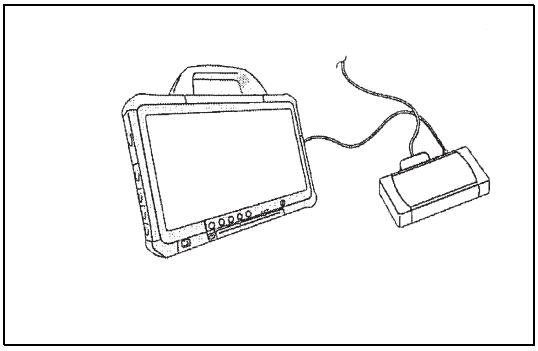

SAPH16F010300266

1. Warm-up the engine. (engine coolant temperature: 60 °C {140 °F} or more)
2. Stop the engine and set the starter switch to the "LOCK" position.
3. Connect the vehicle to HINO DX II .
4. Set the starter switch to the "ON" position.
5. Select [Engine] and check if the DTC (P0182 or P0183) has been detected.

**Has DTC (P0182 or P0183) been detected?**

**YES**

**Replace the engine ECU.**
**Perform "After-inspection work" of INFORMATION section.**

**NO**

**Procedure completed.**
**Perform "After-inspection work" of INFORMATION section.**

# DTC: P0191

EN01H16F01030F03001048

## P0191: Common rail pressure sensor (main and sub) - out of range

INFORMATION

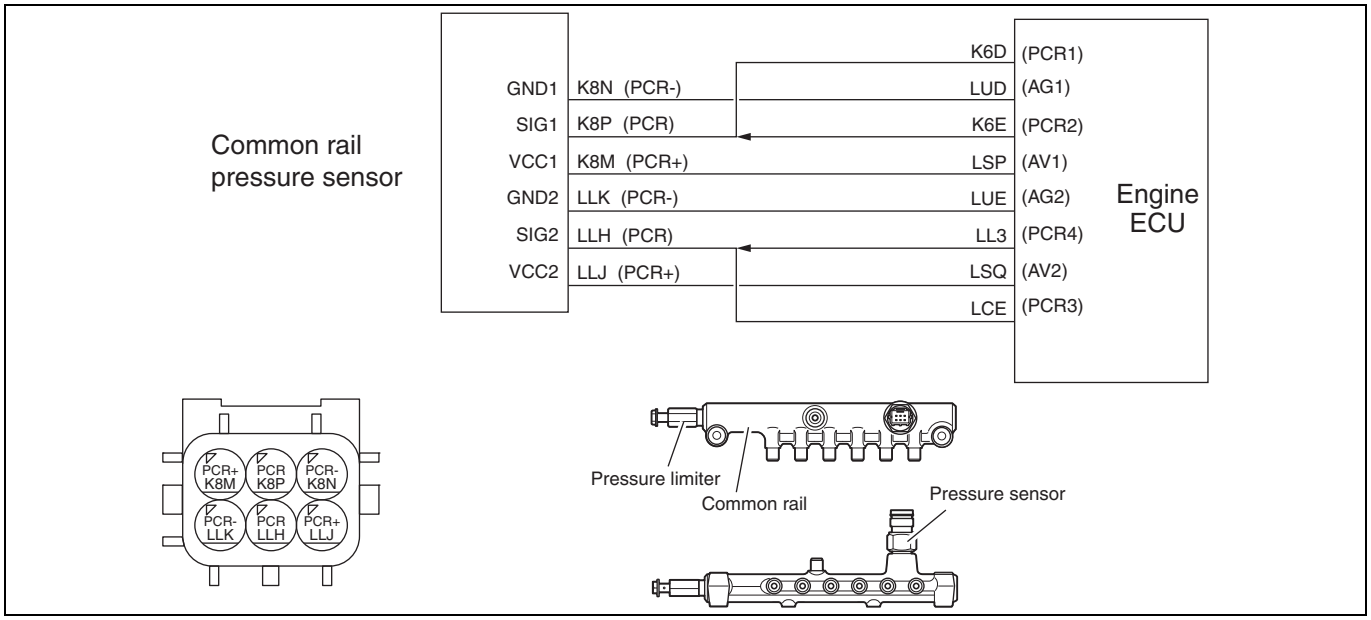


SAPH16F010300267

**1. Technical description**

- The common rail pressure sensor consistently measures common rail pressure.

**<Description of malfunction>**

- Common rail pressure is not detected normally.

**2. DTC set condition**

(1) Check conditions

- The starter switch is set to the ON position.
- The battery voltage is in the range of 10 V to 16 V.
- The engine has been stopped or the engine revolution stays at or above 500 r/min for 5 seconds or more.

(2) Judgment criteria

- Both the common rail pressure sensor main and sub have malfunctioned.

**3. Reset condition**

- After normal operation is restored and the starter switch is on the "LOCK" position.

**4. Indication, warning or system control regulation when the DTC is set.**

- MIL: ON
- Engine output is restricted.

**5. Symptoms on the vehicle when the DTC is set**

**<Symptoms on the vehicle due to backup control (fail safe function)>**

- Engine output is insufficient.

**<Symptoms on the vehicle due to malfunction>**

- –

**6. Pre-inspection work**

- Check that the battery voltage is in the normal range.

**7. After-inspection work**

- Clear all past DTCs.
- Check that no DTC is stored after test drive.

**8. Estimated failure factors**

- Improper connector connection or fitting.
- Wire harness disconnection or short-circuit
- Sensor disconnection or abnormality in the sensing part. (dirt, clogging, damage, etc.)
- Abnormality in resistance of sensor.
- Abnormal power supply of engine ECU sensor, malfunction of internal circuit.

## INSPECTION PROCEDURE: P0191

| 1 | Check the DTC detected 1 (Engine ECU) [HINO DX ll ] |
|---|---|

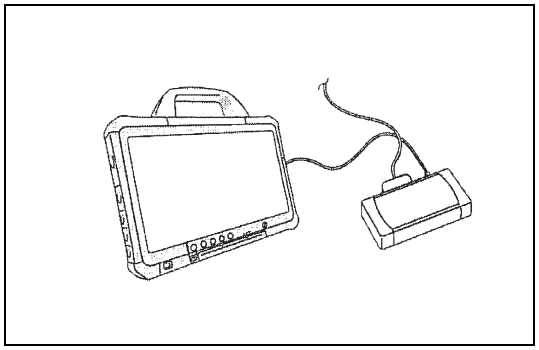

SAPH16F010300268

1. Set the starter switch to the "LOCK" position.
2. Connect the vehicle to HINO DX II .
3. Set the starter switch to the "ON" position.
4. Select [Engine] and check if any DTC other than P0191 (for example, P0192, P0193, P1197, or P1198) have been detected.

**Has a DTC other than P0191 (P0192, P0193, P1197, P1198) been detected?**

**YES**

**Go to the diagnostic procedure of a related DTC.**

**NO**

**Go to step 2.**

| 2 | Inspect the common rail pressure sensor connector |
|---|---|

1. Inspect the connector connection of the common rail pressure sensor (Improper fitting and condition).

**Was any failure found?**

**YES**

**Connect it securely, repair it if needed. Perform "After-inspection work" of INFORMATION section.**

**NO**

**Go to step 3.**

| 3 | Inspect the power supply to the sensor |
|---|---|

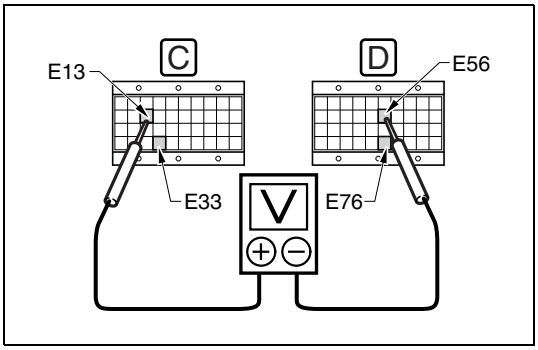


SAPH16F010300269

1. Set the starter switch to the "LOCK" position.
2. Connect the signal check harness to the engine ECU.
3. Disconnect the common rail pressure sensor connector.
4. Set the starter switch to the "ON" position.
5. Use the electrical tester to measure the voltage between the terminals of the engine ECU (signal check harness).

| Measurement conditions | Tester connections | Standard values |
|---|---|---|
| Starter switch: ON | Engine ECU (signal check harness) AV1(E13) – AG1(E56) AV2(E33) – AG2(E76) | 4.5 – 5.5 V |

**Do the measurements meet the standard value?**

**YES**

**Go to step 4.**

**NO**

**Replace the engine ECU.**
**Perform "After-inspection work" of INFORMATION section.**

| 4 | Inspect the signal of the common rail pressure sensor |
|---|---|

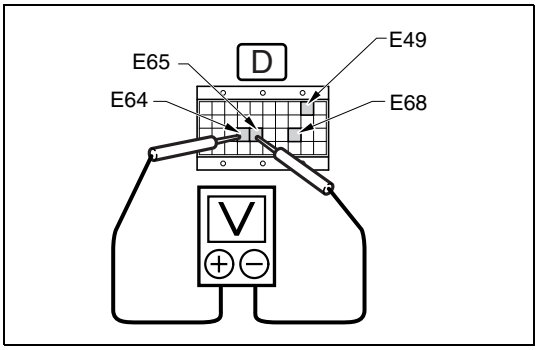


SAPH16F010300270

1. Set the starter switch to the "LOCK" position.
2. Connect the common rail pressure sensor connector.
3. Set the starter switch to the "ON" position.
4. Use the electrical tester to measure the voltage between the terminals of the engine ECU (signal check harness).

| Measurement conditions | Tester connections | Standard values |
|---|---|---|
| Starter switch: ON | Engine ECU (signal check harness) PCR1(E49) – PCR3(E64) PCR1(E49) – PCR4(E65) PCR2(E68) – PCR3(E64) PCR2(E68) – PCR4(E65) | 0.3 – 0.7 V |

**Do the measurements meet the standard value?**

**YES**

**Go to step 5.**

**NO**

**Replace the common rail pressure sensor.**
**Perform "After-inspection work" of INFORMATION section.**

| 5 | **Check the DTC detected 2(Engine ECU) [HINO DX ll ]** |
|---|---|

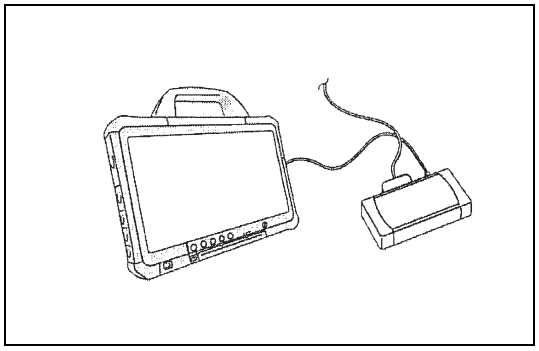

SAPH16F010300271

1. Perform engine warm-up. (engine coolant temperature: 60 °C {140 °F} or more)
2. Stop the engine and set the starter switch to the "ON" position.
3. Select [Engine] and check if P0191 has been detected.

**Has DTC P0191 been detected?**

**YES**

**Replace the engine ECU.**
**Perform "After-inspection work" of INFORMATION section.**

**NO**

**Procedure completed.**
**Perform "After-inspection work" of INFORMATION section.**

# DTC: P0192 and P0193

EN01H16F01030F03001049

## P0192: Common rail pressure sensor (main) - out of range (Out of range low)

INFORMATION

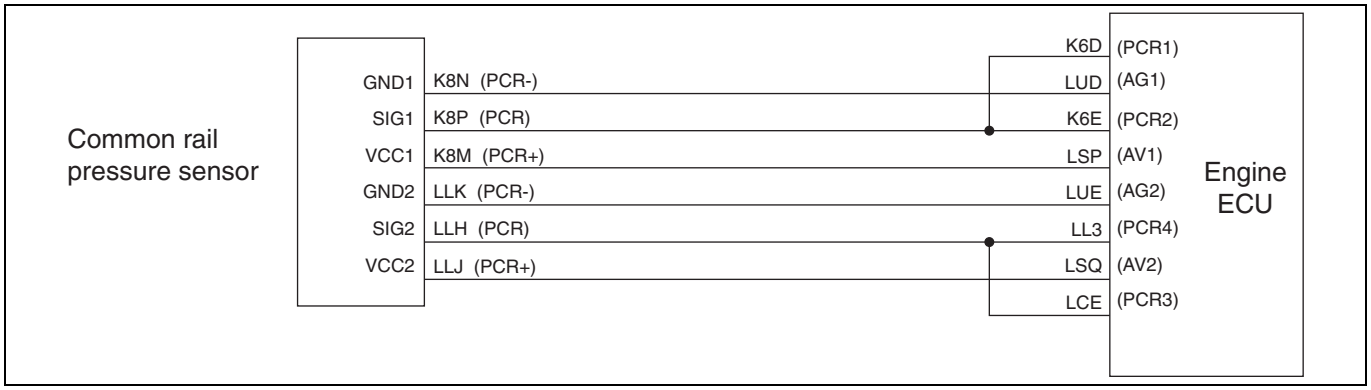


SAPH16F010300272

**1. Technical description**

- The common rail pressure sensor consistently measures common rail pressure.

**<Description of malfunction>**

- Common rail pressure cannot be correctly sensed.

**2. DTC set condition**

(1) DTC detection condition

- Starter switch ON.
- Battery voltage is in the range of 10 V to 16 V.

The conditions described above remain for 5 seconds or longer.

(2) Judgment criteria

- Output of the common rail pressure sensor (main) remains at 0.7 V (-10.7 MPa) or lower for 0.2 seconds or longer.

**3. Reset condition**

- After normal operation is restored and the starter switch is on the "LOCK" position.

**4. Indication, warning or system control regulation when the DTC is set.**

- MIL: ON
- SVS light: OFF
- Engine output is restricted.
- Cruise control function is not available.
- Idling stop system is not available.

**5. Symptoms on the vehicle when the DTC is set**

**<Symptoms on the vehicle due to backup control (fail safe function)>**

- Engine output is insufficient.
- Cruise control does not work.
- Idling stop system does not work.

**<Symptoms on the vehicle due to malfunction>**

- –

**6. Pre-inspection work**

- Check that the battery voltage is in the normal range.

**7. After-inspection work**

- Clear all past DTCs.
- Check that no DTC is stored after test drive.

**8. Estimated failure factors**

- Abnormal resistance of sensor
- Failure in engine ECU internal circuit
- Sensor harness GND short
- Sensor internal short

## P0193: Common rail pressure sensor (main) - out of range (Out of range high)

INFORMATION

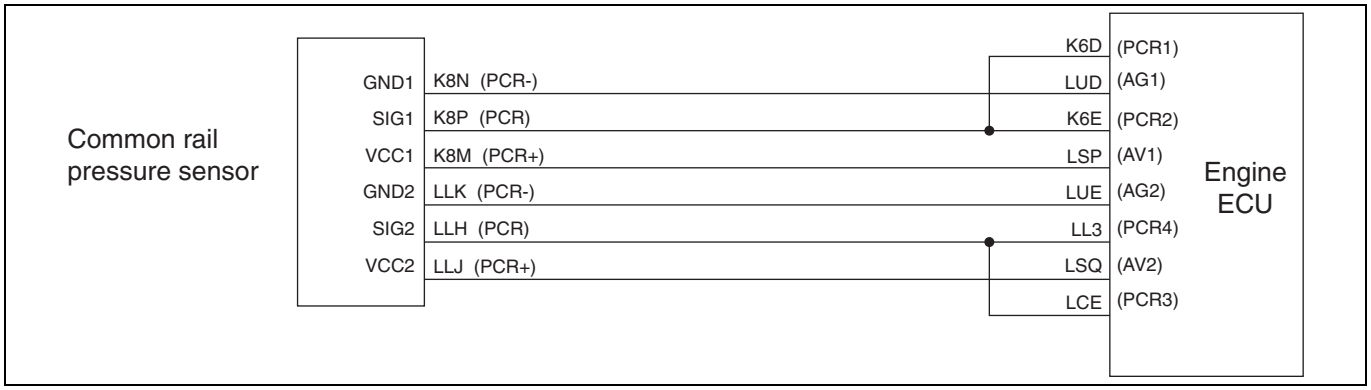


SAPH16F010300273

**1. Technical description**

- The common rail pressure sensor consistently measures common rail pressure.

**<Description of malfunction>**

- Common rail pressure cannot be correctly sensed.

**2. DTC set condition**

(1) DTC detection condition

- Starter switch ON.
- Battery voltage is in the range of 10 V to 16 V.

The conditions described above remain for 5 seconds or longer.

(2) Judgment criteria

- Output of the common rail pressure sensor (main) remains at 4.49 V (260 MPa) or higher for 0.2 seconds or longer.

**3. Reset condition**

- After normal operation is restored and the starter switch is on the "LOCK" position.

**4. Indication, warning or system control regulation when the DTC is set.**

- MIL: ON
- SVS light: OFF
- Engine output is restricted.
- Cruise control function is not available.
- Idling stop system is not available.
- Vehicle start control is not available.

**5. Symptoms on the vehicle when the DTC is set**

**<Symptoms on the vehicle due to backup control (fail safe function)>**

- Engine output is insufficient.
- Cruise control does not work.
- Idling stop system does not work.
- Vehicle start control does not work.

**<Symptoms on the vehicle due to malfunction>**

- –

**6. Pre-inspection work**

- Check that the battery voltage is in the normal range.

**7. After-inspection work**

- Clear all past DTCs.
- Check that no DTC is stored after test drive.

**8. Estimated failure factors**

- Irregular contact (disconnection or poor fit of connector)
- Abnormal resistance of sensor
- Harness disconnection or short-circuit
- Failure in engine ECU sensor power supply or internal circuit failure

## INSPECTION PROCEDURE: P0192 and P0193

**1 Inspect the common rail pressure sensor connector**

1. Check the connection of the common rail pressure sensor connector (Looseness and poor contact).

**Was any failure found?**

**YES**

**Connect securely, repair if needed.**
**Perform "After-inspection work" of INFORMATION section.**

**NO**

**Go to step 2.**

**2 Inspect the common rail pressure sensor**

1. Check the installation of the common rail pressure sensor.
2. Make sure there is no dirt or damage to the common rail pressure sensor.

**Was any failure found?**

**YES**

**Clean the common rail pressure sensor and install it properly.**
**If damaged, replace the common rail pressure sensor.**
**Perform "After-inspection work" of INFORMATION section.**

**NO**

**Go to step 3.**

| 3 | Inspect the common rail pressure sensor unit |
|---|---|

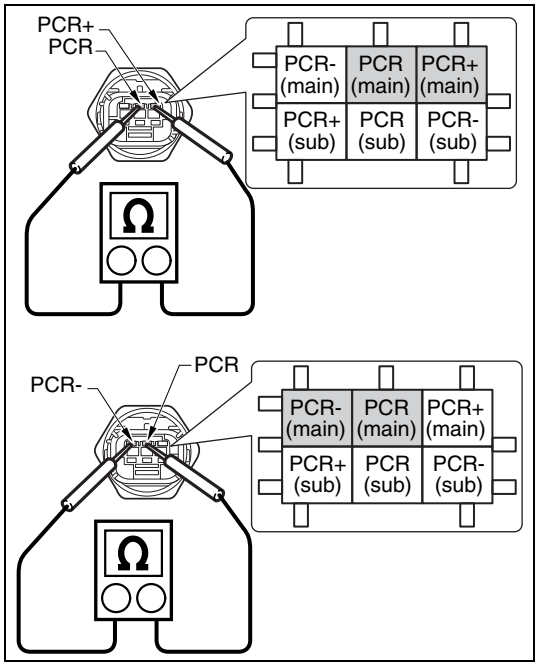

SAPH16F010300274

1. Set the starter switch to the "LOCK" position.
2. Disconnect the connector of the common rail pressure sensor connector.
3. Use the electrical tester to measure the resistance between the terminals of the common rail pressure sensor connector.

| Measurement conditions | Tester connections | Standard values |
|---|---|---|
| **Starter switch: LOCK** | **Common rail pressure sensor (1) PCR+ (main) – PCR (main) (2) PCR (main) – PCR- (main)** | **(1) 1.05 – 3.55 kΩ (2) 6.7 – 18.7 kΩ** |

**Do the measurements meet the standard value?**

**YES**

**Go to step 4.**

**NO**

**Replace the common rail pressure sensor. Perform "After-inspection work" of INFORMATION section.**

| 4 | Inspect the common rail pressure sensor power supply |
|---|---|

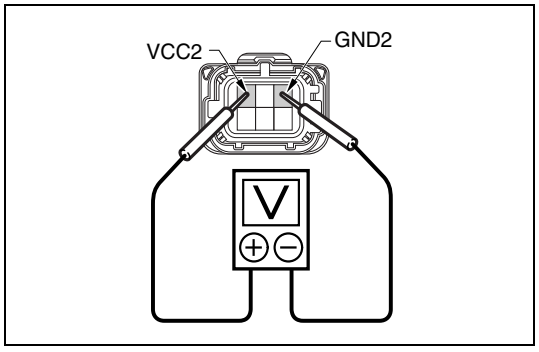

SAPH16F010300275

1. Set the starter switch to the "ON" position.
2. Use the electrical tester to measure the voltage between the terminals of the common rail pressure sensor vehicle-side connector.

| Measurement conditions | Tester connections | Standard values |
|---|---|---|
| **Starter switch: ON** | **Common rail pressure sensor vehicle-side connector VCC2 – GND2** | **4.5 – 5.5 V** |

**Do the measurements meet the standard value?**

**YES**

**Go to step 5.**

**NO**

**Go to step 6.**

## 5 Inspect the common rail pressure sensor signal circuit

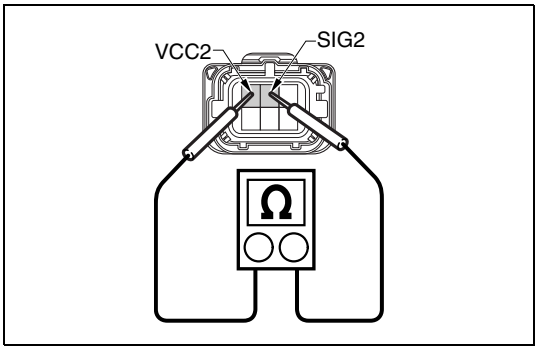


SAPH16F010300276

1. Set the starter switch to the "LOCK" position.
2. Use the electrical tester to measure the resistance between the terminals of the common rail pressure sensor vehicle-side connector.

| Measurement conditions | Tester connections | Standard values |
|---|---|---|
| **Starter switch: LOCK** | **Common rail pressure sensor vehicle-side connector VCC2 – SIG2** | **200 – 250 kΩ** |

**Do the measurements meet the standard value?**

**YES** → **Go to step 8.**

**NO** → **Go to step 6.**

## 6 Inspect for short-circuits in wire harness of the common rail pressure sensor

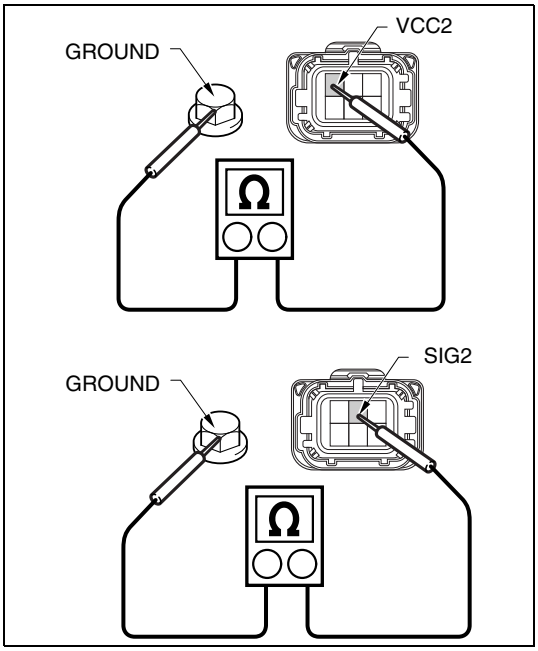


SAPH16F010300277

1. Set the starter switch to the "LOCK" position.
2. Disconnect the connector of the engine ECU.
3. Use the electrical tester to measure the resistance between the common rail pressure sensor vehicle-side connector terminals and ground.

| Measurement conditions | Tester connections | Standard values |
|---|---|---|
| **Starter switch: LOCK** | **Common rail pressure sensor vehicle-side connector VCC2 – Ground SIG2 – Ground** | **∞ Ω** |

**Do the measurements meet the standard value?**

YES

**Go to step 7.**

NO

**Repair or replace the harness.**
**Perform "After-inspection work" of INFORMATION section.**

## 7 Inspect disconnection of the common rail pressure sensor harness

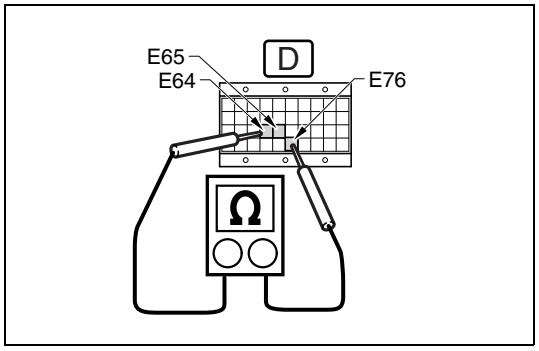


SAPH16F010300278

1. Connect the connector of the common rail pressure sensor.
2. Connect the signal check harness to the engine ECU vehicle-side harness. (Do not connect the harness to the ECU.)
3. Use the electrical tester to measure the resistance between the terminals of the engine ECU (signal check harness).

| Measurement conditions | Tester connections | Standard values |
|---|---|---|
| **Starter switch: LOCK** | **Engine ECU (signal check harness) PCR3(E64) – AGD2(E76) PCR4(E65) – AGD2(E76)** | **6.7 – 20.7 kΩ** |

**Do the measurements meet the standard value?**

YES

**Go to step 8.**

NO

**Repair or replace the harness.**
**Perform "After-inspection work" of INFORMATION section.**

| 8 | Check the DTC detected (Engine ECU) [HINO DX II ] |
|---|---|

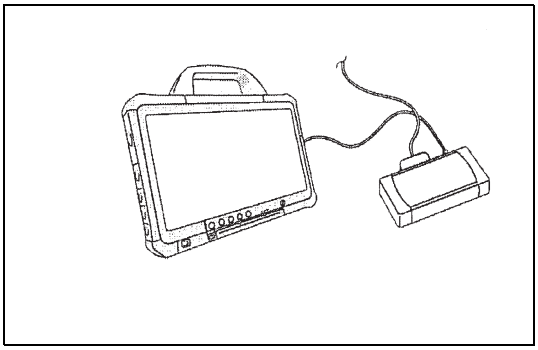

SAPH16F010300279

1. Warm-up the engine. (engine coolant temperature: 60 °C {140 °F} or more)
2. Stop the engine and set the starter switch to the "LOCK" position.
3. Connect the vehicle to HINO DX II .
4. Set the starter switch to the "ON" position.
5. Select [Engine] and check if the DTC (P0192 or P0193) has been detected.

**Has DTC (P0192 or P0193) been detected?**

**YES**

**Replace the engine ECU.**
**Perform "After-inspection work" of INFORMATION section.**

**NO**

**Procedure completed.**
**Perform "After-inspection work" of INFORMATION section.**

# DTC: P01A5

EN01H16F01030F03001050

## P01A5: Common rail pressure sensor (sub) - out of range (Out of range low)

INFORMATION

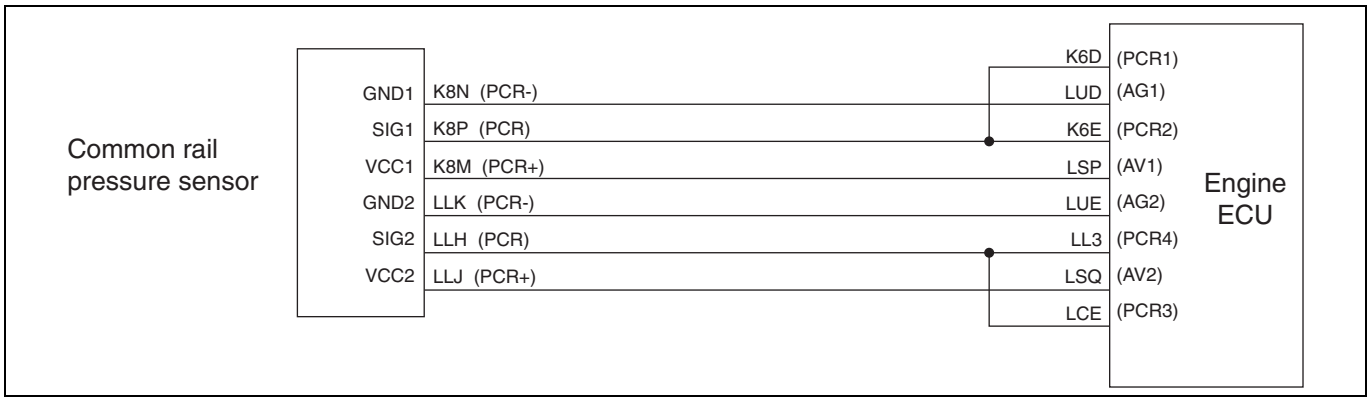


SAPH16F010300280

**1. Technical description**

- The common rail pressure (sub) sensor constantly measures the common rail pressure.

**<Technical Description>**

- Common rail pressure is not correctly recognized.
- Possible failure of common rail pressure (sub) sensor or harness GND short-circuit

**2. DTC set condition**

(1) DTC detection condition
- Starter switch ON.
- Battery voltage is in the range of 10 V to 16 V.
- Engine stall condition or engine speed above 500 r/min continues for 5 seconds.

(2) Judgment criteria
- Common rail pressure (sub) sensor voltage is below 1.2 V (-10.7 MPa) for 0.2 seconds.

**3. Reset condition**

- After normal operation is restored and the starter switch is on the "LOCK" position.

**4. Indication, warning or system control regulation when the DTC is set.**

- MIL: ON
- SVS light: OFF

**5. Symptoms on the vehicle when the DTC is set**

**<Symptoms on the vehicle due to backup control (fail safe function)>**

- –

**<Symptoms on the vehicle due to malfunction>**

- –

**6. Pre-inspection work**

- Check that the battery voltage is in the normal range.

**7. After-inspection work**

- Clear all past DTCs.
- Check that no DTC is detected after test drive.

**8. Estimated failure factors**

- Abnormal sensor resistance
- Harness disconnection or short-circuit
- Looseness or poor contact of connector
- Engine ECU sensor power supply or internal circuit failure

## INSPECTION PROCEDURE: P01A5

| 1 | Inspect the common rail pressure sensor connector |
|---|---|

1. Check the connection of the common rail pressure sensor connector (Looseness and poor contact).

**Was any failure found?**

**YES**

**Connect securely, repair if needed.**
**Perform "After-inspection work" of INFORMATION section.**

**NO**

**Go to step 2.**

| 2 | Inspect the common rail pressure sensor |
|---|---|

1. Check the installation of the common rail pressure sensor.
2. Make sure there is no dirt or damage to the common rail pressure sensor.

**Was any failure found?**

**YES**

**Clean the common rail pressure sensor and install it properly.**
**If damaged, replace the common rail pressure sensor.**
**Perform "After-inspection work" of INFORMATION section.**

**NO**

**Go to step 3.**

| 3 | Inspect the common rail pressure sensor unit |
|---|---|

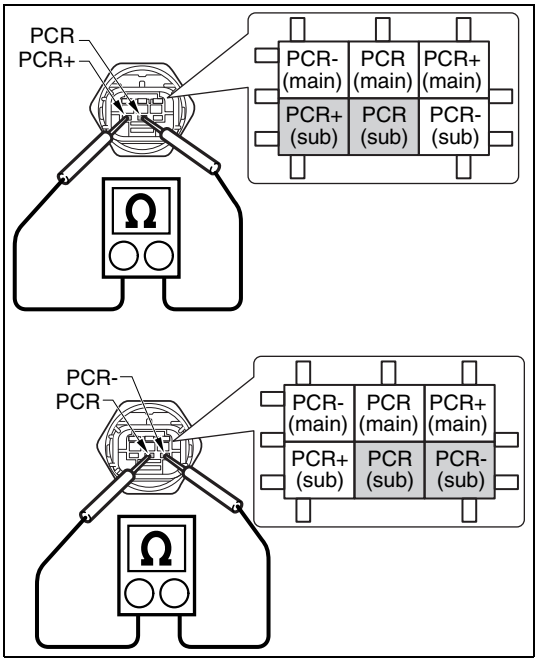


SAPH16F010300281

1. Set the starter switch to the "LOCK" position.
2. Disconnect the common rail pressure sensor connector.
3. Measure the resistance between the terminals of the sensor using the electrical tester.

| Measurement conditions | Tester connections | Standard values |
|---|---|---|
| **Starter switch: LOCK** | **Common rail pressure sensor (1) PCR+ (sub) – PCR (sub) (2) PCR (sub) – PCR- (sub)** | **(1) 1.05 – 3.55 kΩ (2) 6.7 – 18.7 kΩ** |

**Do the measurements meet the standard value?**

**YES**

**Go to step 4.**

**NO**

**Replace the common rail pressure sensor. Perform "After-inspection work" of INFORMATION section.**

## 4 Inspect the common rail pressure sensor power supply

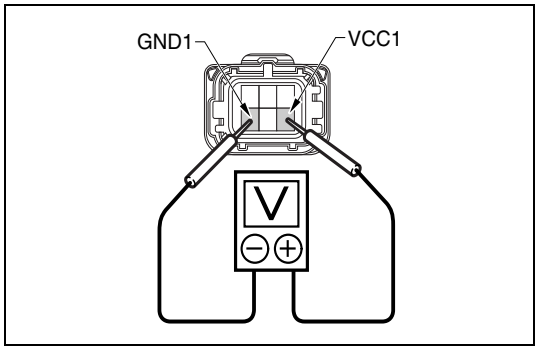


SAPH16F010300282

1. Set the starter switch to the "ON" position.
2. Measure the voltage between the terminals of the common rail pressure sensor vehicle-side connector using the electrical tester.

| Measurement conditions | Tester connections | Standard values |
|---|---|---|
| Starter switch: ON | Common rail pressure sensor vehicle-side connector VCC1 – GND1 | 4.5 – 5.5 V |

**Do the measurements meet the standard value?**

**YES**

**Go to step 5.**

**NO**

**Repair or replace the harness.**
**Perform "After-inspection work" of INFORMATION section.**

## 5 Inspect the common rail pressure sensor signal circuit

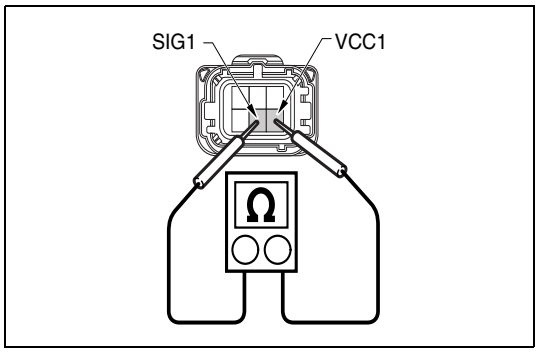


SAPH16F010300283

1. Set the starter switch to the "LOCK" position.
2. Use the electrical tester to measure the resistance between the terminals in the common rail pressure sensor vehicle-side connector.

| Measurement conditions | Tester connections | Standard values |
|---|---|---|
| Starter switch: LOCK | Common rail pressure sensor vehicle-side connector VCC1 – SIG1 | 200 – 250 kΩ |

**Do the measurements meet the standard value?**

**YES**

**Go to step 8.**

**NO**

**Go to step 6.**

## 6 Inspect for short-circuits in wire harness of the common rail pressure sensor

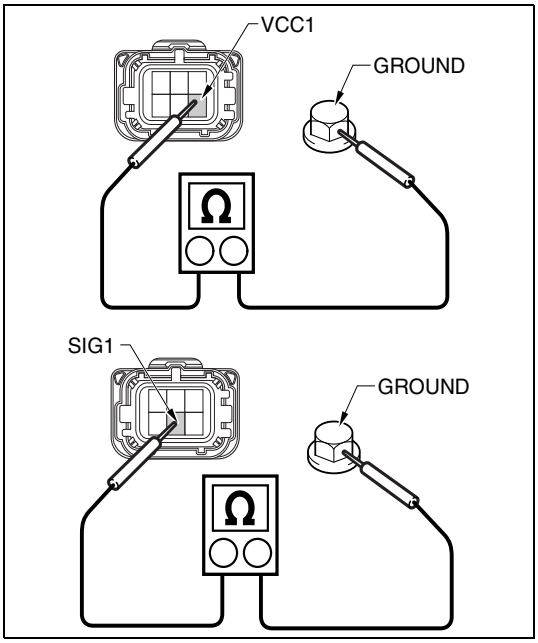


SAPH16F010300284

1. Set the starter switch to the "LOCK" position.
2. Disconnect the engine ECU connector.
3. Use the electrical tester to measure the resistance between the common rail pressure sensor vehicle-side connector terminals and ground.

| Measurement conditions | Tester connections | Standard values |
|---|---|---|
| **Starter switch: LOCK** | **Common rail pressure sensor vehicle-side connector VCC1 – Ground SIG1 – Ground** | **∞ Ω** |

**Do the measurements meet the standard value?**

**YES**

**Go to step 7.**

**NO**

**Repair or replace the harness. Perform "After-inspection work" of INFORMATION section.**

## 7 Inspect disconnection of the common rail pressure sensor harness

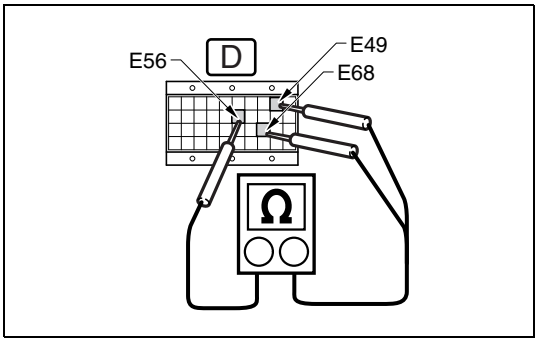


SAPH16F010300285

1. Connect the common rail pressure sensor connector.
2. Connect the signal check harness to the engine ECU vehicle-side harness. (Do not connect harness to the ECU.)
3. Use the electrical tester to measure the resistance between the terminals in the engine ECU (signal check harness).

| Measurement conditions | Tester connections | Standard values |
|---|---|---|
| **Starter switch: LOCK** | **Engine ECU (signal check harness) PCR1(E49) – AG1(E56) PCR2(E68) – AG1(E56)** | **6.7 – 20.7 kΩ** |

**Do the measurements meet the standard value?**

YES

**Go to step 8.**

NO

**Repair or replace the harness.**
**Perform "After-inspection work" of INFORMATION section.**

| 8 | **Check the DTC detected (Engine ECU) [HINO DX ll ]** |
|---|---|

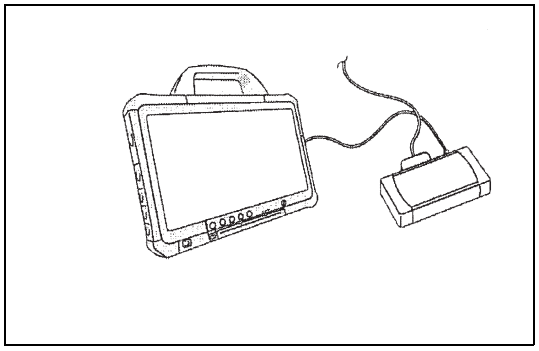

SAPH16F010300286

1. Perform an engine warm-up. (engine coolant temperature: 60°C {140°F} or more)
2. Stop the engine and set the starter switch to the "LOCK" position.
3. Connect the vehicle to HINO DX II .
4. Set the starter switch to the "ON" position.
5. Select [Engine] and check if P01A5 has been detected.

**Has DTC P01A5 been detected?**

YES

**Replace the engine ECU.**
**Perform "After-inspection work" of INFORMATION section.**

NO

**Procedure completed.**
**Perform "After-inspection work" of INFORMATION section.**

# DTC: P01A6

EN01H16F01030F03001051

## P01A6: Common rail pressure sensor (sub) - out of range (Out of range high)

INFORMATION

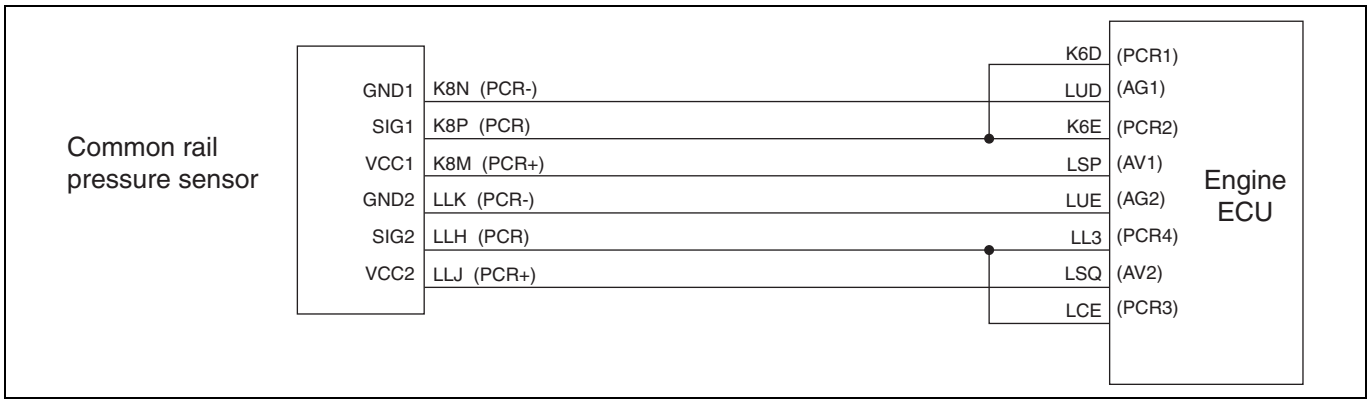


SAPH16F010300287

**1. Technical description**

- The common rail pressure sensor (sub) constantly measures the common rail pressure.

**<Technical Description>**

- Common rail pressure is not correctly identified.
- Possible failure of common rail pressure sensor (sub) or harness disconnection or +B short.

**2. DTC set condition**

(1) DTC detection condition
- Starter switch ON.
- Battery voltage is in the range of 10 V to 16 V.
- Engine stall condition or engine speed above 500 r/min continues for 5 seconds.

(2) Judgment criteria
- Common rail pressure sensor (sub) voltage is above 4.79 V (246 MPa) for 0.2 seconds.

**3. Reset condition**

- After normal operation is restored and the starter switch is on the "LOCK" position.

**4. Indication, warning or system control regulation when the DTC is set.**

- MIL: ON
- SVS light: OFF

**5. Symptoms on the vehicle when the DTC is set**

**<Symptoms on the vehicle due to backup control (fail safe function)>**

- –

**<Symptoms on the vehicle due to malfunction>**

- –

**6. Pre-inspection work**

- Check that the battery voltage is in the normal range.

**7. After-inspection work**

- Clear all past DTCs.
- Check that no DTC is detected after test drive.

**8. Estimated failure factors**

- Abnormal resistance of sensor
- Disconnection or short-circuit in sensor harness
- Irregular contact (disconnection or poor fit of connector)
- Engine ECU sensor power supply or internal circuit failure

## INSPECTION PROCEDURE: P01A6

| 1 | Inspect the common rail pressure sensor connector |
|---|---|

1. Check the connection of the common rail pressure sensor connector (Looseness and poor contact).

**Was any failure found?**

**YES**

**Connect securely, repair if needed.**
**Perform "After-inspection work" of INFORMATION section.**

**NO**

**Go to step 2.**

| 2 | Inspect the common rail pressure sensor |
|---|---|

1. Check the installation of the common rail pressure sensor.
2. Make sure there is no dirt or damage to the common rail pressure sensor.

**Was any failure found?**

**YES**

**Clean the common rail pressure sensor and install it properly.**
**If damaged, replace the common rail pressure sensor.**
**Perform "After-inspection work" of INFORMATION section.**

**NO**

**Go to step 3.**

| 3 | Inspect the common rail pressure sensor unit |
|---|---|

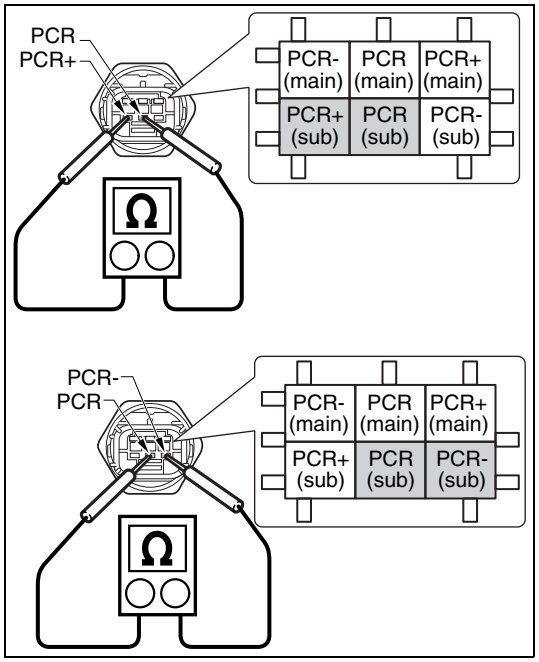

SAPH16F010300288

1. Set the starter switch to the "LOCK" position.
2. Disconnect the common rail pressure sensor connector.
3. Measure the resistance between the terminals of the sensor using the electrical tester.

| Measurement conditions | Tester connections | Standard values |
|---|---|---|
| **Starter switch: LOCK** | **Common rail pressure sensor (1) PCR+ (sub) – PCR (sub) (2) PCR (sub) – PCR- (sub)** | **(1) 1.05 – 3.55 kΩ (2) 6.7 – 18.7 kΩ** |

**Do the measurements meet the standard value?**

**YES**

**Go to step 4.**

**NO**

**Replace the common rail pressure sensor. Perform "After-inspection work" of INFORMATION section.**

## 4 Inspect the common rail pressure sensor power supply

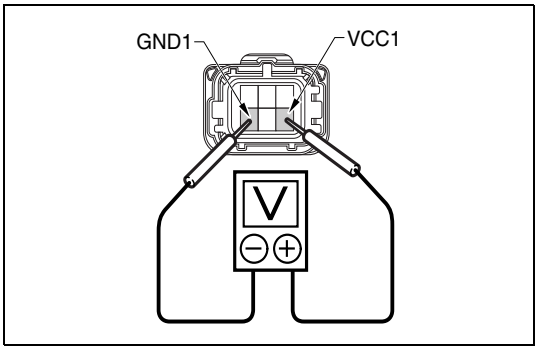


SAPH16F010300289

1. Set the starter switch to the "ON" position.
2. Measure the voltage between the terminals of the common rail pressure sensor vehicle-side connector using the electrical tester.

| Measurement conditions | Tester connections | Standard values |
|---|---|---|
| Starter switch: ON | Common rail pressure sensor vehicle-side connector VCC1 – GND1 | 4.5 – 5.5 V |

**Do the measurements meet the standard value?**

**YES**

**Go to step 5.**

**NO**

**Repair or replace the harness.**
**Perform "After-inspection work" of INFORMATION section.**

## 5 Inspect the common rail pressure sensor signal circuit

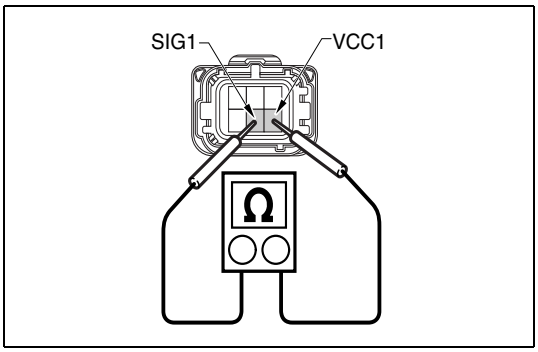


SAPH16F010300290

1. Set the starter switch to the "LOCK" position.
2. Use the electrical tester to measure the resistance between the terminals of the common rail pressure sensor vehicle-side connector.

| Measurement conditions | Tester connections | Standard values |
|---|---|---|
| Starter switch: LOCK | Common rail pressure sensor vehicle-side connector VCC1 – SIG1 | 200 – 250 kΩ |

**Do the measurements meet the standard value?**

**YES**

**Go to step 8.**

**NO**

**Go to step 6.**

| 6 | Inspect for short-circuits in wire harness of the common rail pressure sensor |
|---|---|

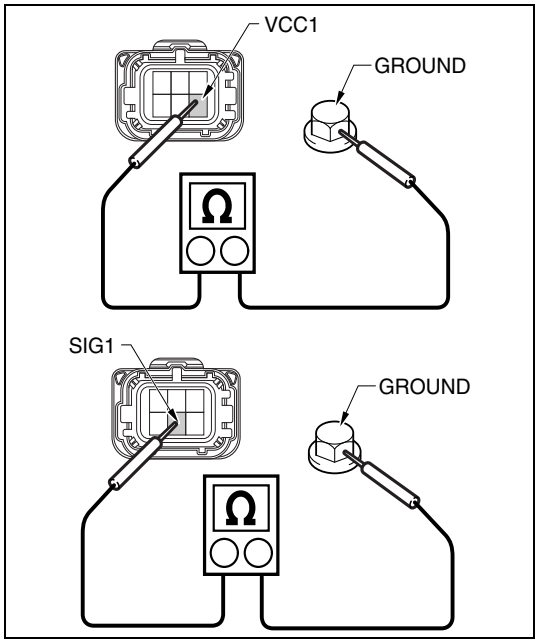

SAPH16F010300291

1. Set the starter switch to the "LOCK" position.
2. Disconnect the engine ECU connector.
3. Use the electrical tester to measure the resistance between the common rail pressure sensor vehicle-side connector terminals and ground.

| Measurement conditions | Tester connections | Standard values |
|---|---|---|
| **Starter switch: LOCK** | **Common rail pressure sensor vehicle-side connector VCC1 – Ground SIG1 – Ground** | **∞ Ω** |

**Do the measurements meet the standard value?**

**YES**

**Go to step 7.**

**NO**

**Repair or replace the harness. Perform "After-inspection work" of INFORMATION section.**

| 7 | Inspect disconnection of the common rail pressure sensor harness |
|---|---|

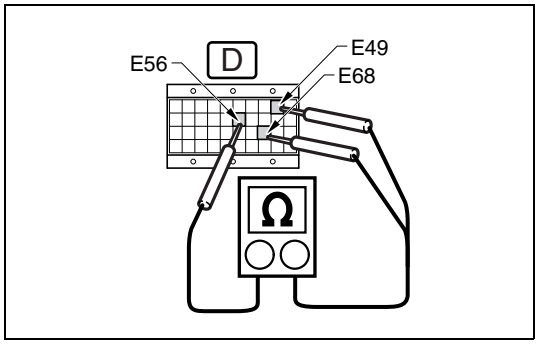

SAPH16F010300292

1. Connect the common rail pressure sensor connector.
2. Connect the signal check harness to the engine ECU vehicle-side harness. (Do not connect harness to the ECU.)
3. Use the electrical tester to measure the resistance between the terminals in the engine ECU (signal check harness).

| Measurement conditions | Tester connections | Standard values |
|---|---|---|
| **Starter switch: LOCK** | **Engine ECU (signal check harness) PCR1(E49) – AG1(E56) PCR2(E68) – AG1(E56)** | **6.7 – 20.7 kΩ** |

**Do the measurements meet the standard value?**

| YES | NO |
|---|---|
| **Go to step 8.** | **Repair or replace the harness.<br>Perform "After-inspection work" of INFORMATION section.** |

| 8 | Check the DTC detected (Engine ECU) [HINO DX II ] |
|---|---|

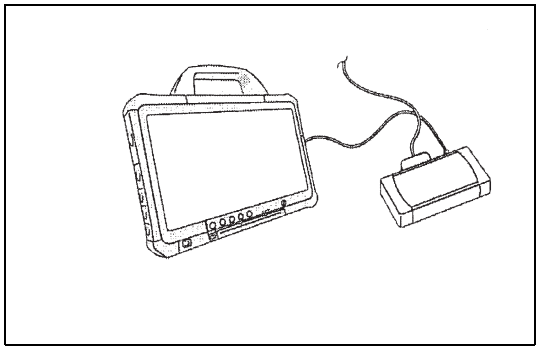

SAPH16F010300293

1. Perform an engine warm-up. (engine coolant temperature: 60 °C {140 °F} or more)
2. Stop the engine and set the starter switch to the "LOCK" position.
3. Connect the vehicle to HINO DX II .
4. Set the starter switch to the "ON" position.
5. Select [Engine] and check if P01A6 has been detected.

**Has DTC P01A6 been detected?**

| YES | NO |
|---|---|
| **Replace the engine ECU.<br>Perform "After-inspection work" of INFORMATION section.** | **Procedure completed.<br>Perform "After-inspection work" of INFORMATION section.** |

# DTC: P0200

EN01H16F01030F03001052

## P0200: Fuel injector driver charge circuit (circuit high)

INFORMATION

**1. Technical description**

- –

**<Description of malfunction>**

- Excessively high voltage has been detected in the injector charge circuit.

**2. DTC set condition**

(1) DTC detection condition

- Starter switch ON.
- Battery voltage is in the range of 10 V to 16 V.
- Fuel injector; deactivated.

(2) Judgment criteria

- Fuel injector driver charge circuit voltage > 105 V
- Failure timer ≥ 0.384 seconds

**3. Reset condition**

- After normal operation is restored and engine is restarted after engine stall.

**4. Indication, warning or system control regulation when the DTC is set.**

- MIL: ON
- SVS light: OFF
- Engine output is restricted.
- Cruise control function is not available.
- Idling stop system is not available.
- Vehicle start control is not available.
- PTO is not available

**5. Symptoms on the vehicle when the DTC is set**

**<Symptoms on the vehicle due to backup control (fail safe function)>**

- Engine output is insufficient.
- Cruise control does not work.
- Idling stop system does not work.
- Vehicle start control does not work.
- PTO cannot be used.

**<Symptoms on the vehicle due to malfunction>**

- –

**6. Pre-inspection work**

- Check that the battery voltage is in the normal range.

**7. After-inspection work**

- Clear all past DTCs.
- Check that no DTC is detected after test drive.

**8. Estimated failure factors**

- ECU failure.
- Temporary operating error due to radio wave interference or noise.

## INSPECTION PROCEDURE: P0200

| 1 | Check the engine ECU internal circuit [HINO DX II ] |
|---|---|

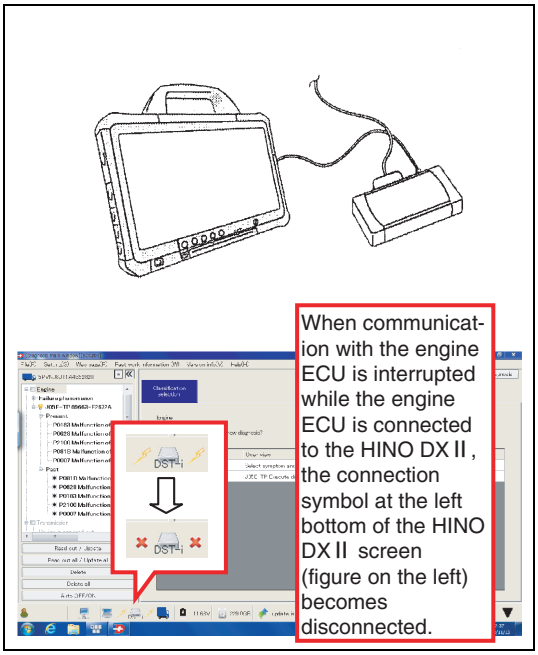


SAPH16F010300294

1. Connect the vehicle to HINO DX II .
2. Set the starter switch to the "ON" position.
3. Select [Engine] and check the communication between HINO DX II and the engine ECU.
4. Erase the malfunction history.
5. Set the starter switch to the "LOCK" position.
6. In HINO DX II , make sure the engine ECU main relay is OFF. (This cuts off the communication between HINO DX II and the engine ECU.)
7. Set the starter switch to the "ON" position.
8. Select [Engine] and check if P0200 has been detected.

**Has DTC P0200 been detected?**

**YES**

**Replace the engine ECU.**
**Perform "After-inspection work" of INFORMATION section.**

**NO**

**Procedure completed.**
**(Temporary operating error due to radio wave interference or noise.)**
**Perform "After-inspection work" of INFORMATION section.**

# DTC: P0201, P0202, P0203, P0204, P0205 and P0206

EN01H16F01030F03001053

**P0201: Fuel injector - disconnection (#1cyl)**
**P0202: Fuel injector - disconnection (#2cyl)**
**P0203: Fuel injector - disconnection (#3cyl)**
**P0204: Fuel injector - disconnection (#4cyl)**
**P0205: Fuel injector - disconnection (#5cyl)**
**P0206: Fuel injector - disconnection (#6cyl)**
INFORMATION

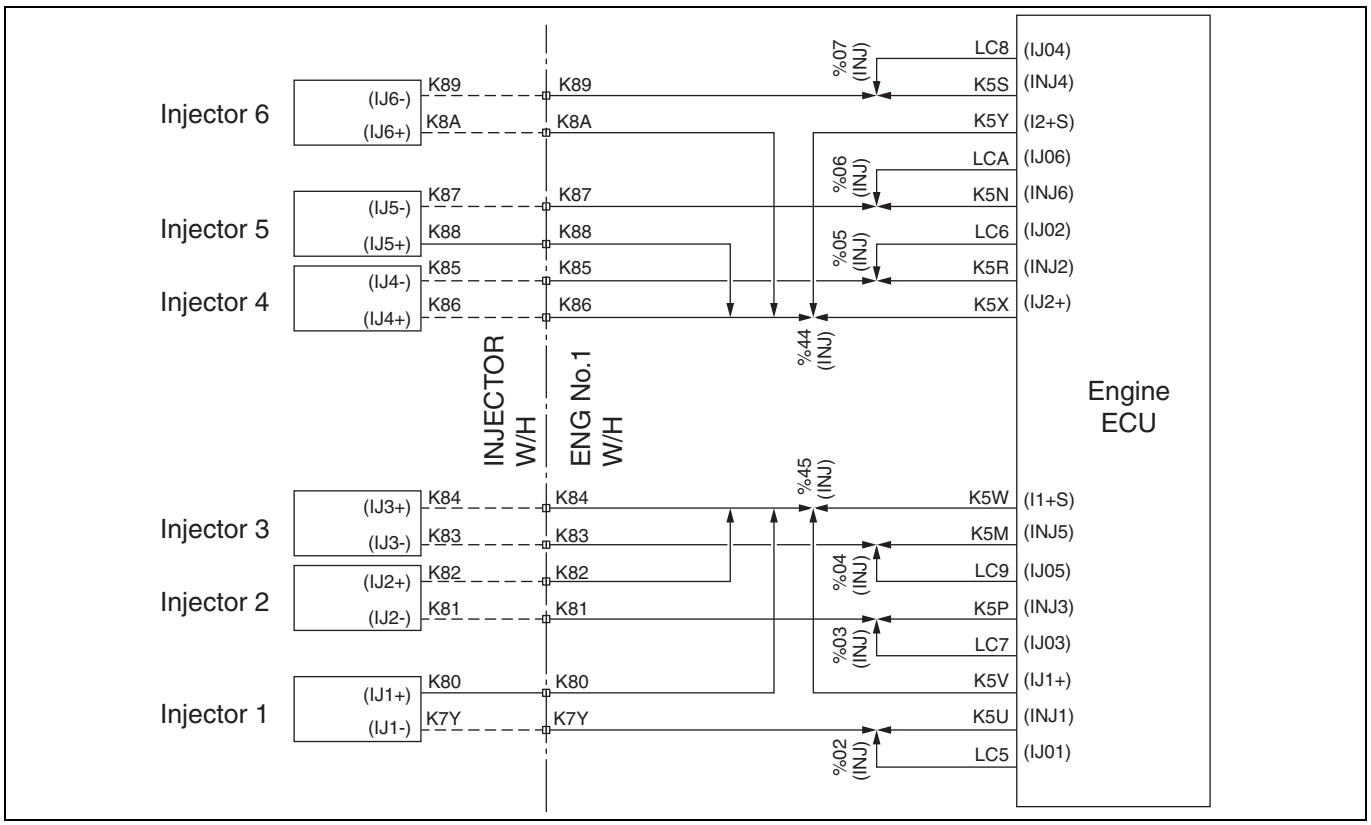


SAPH16F010300295

**1. Technical description**

- An injection quantity is controlled to a valve opening duration of the injector.
- The valve opening duration of the injector is adjusted by the solenoid valve.

**<Description of malfunction>**

- #1 injector failure or possible harness disconnection (P0201)
- #2 injector failure or possible harness disconnection (P0202)
- #3 injector failure or possible harness disconnection (P0203)
- #4 injector failure or possible harness disconnection (P0204)
- #5 injector failure or possible harness disconnection (P0205)
- #6 injector failure or possible harness disconnection (P0206)

**2. DTC set condition**

(1) DTC detection condition

- Battery voltage is in the range of 10 V to 16 V.
- Engine speed is higher than 0.
- The fuel injector driver charge circuit is active.
- No other DTCs are present.

(2) Judgment criteria

- The fuel injector driver circuit remains at 0 mA until it reaches a threshold. (Approximately 4 seconds at 750 r/min. This may vary depending on engine speed.)

**3. Reset condition**

- After normal operation is restored and the starter switch is turned OFF.

**4. Indication, warning or system control regulation when the DTC is set.**

- MIL: ON
- SVS light: OFF
- Engine output is restricted.
- Cruise control function is not available.
- Idling stop system is not available.
- Vehicle start control is not available.

**5. Symptoms on the vehicle when the DTC is set**

**<Symptoms on the vehicle due to backup control (fail safe function)>**

- Engine output is insufficient.
- Cruise control does not work.
- Idling stop system does not work.
- Vehicle start control does not work.

**<Symptoms on the vehicle due to malfunction>**

- –

**6. Pre-inspection work**

- Check that the battery voltage is in the normal range.

**7. After-inspection work**

- Clear all past DTCs.
- Check that no DTC is stored after test drive.

**8. Estimated failure factors**

- Looseness or poor contact of connector
- Vehicle-side harness disconnection (engine ECU – injector central connector)
- Injector harness disconnection or short-circuit
- Disconnected coil in the injector
- Malfunction of ECU

## INSPECTION PROCEDURE: P0201, P0202, P0203, P0204, P0205 and P0206

| 1 | Inspect the engine ECU connector, injector connector |
|---|---|

1. Inspect the connection of the engine ECU connector and the target's injector connector (Looseness and poor contact).

**Was any failure found?**

**YES**

**Connect securely, repair if needed.**
**Perform "After-inspection work" of INFORMATION section.**

**NO**

**Go to step 2.**

| 2 | Inspect disconnection of the engine ECU harness |
|---|---|

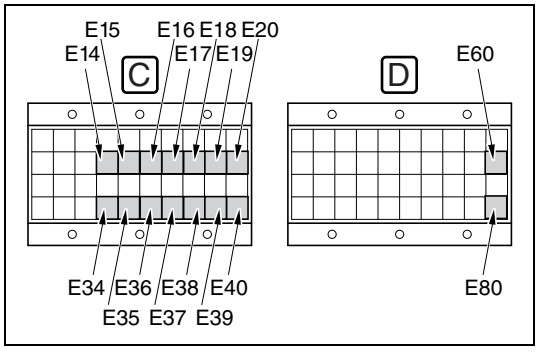


SAPH16F010300296

1. Set the starter switch to the "LOCK" position.
2. Connect the signal check harness to the engine ECU. (Do not connect the harness to the ECU.)
3. Use the electrical tester to measure the resistance between the terminals of the engine ECU (signal check harness).

| Measurement conditions | Tester connections | Standard values |
|---|---|---|
| Starter switch: LOCK | Engine ECU (signal check harness) Refer to the injector's table | 2 Ω |

**<Injector's table>**

| #1 injector | #2 injector | #3 injector |
|---|---|---|
| INJ1(E15) – IJ1+(E14)<br>INJ1(E15) – I1+S(E34)<br>IJ01(E35) – IJ1+(E14)<br>IJ01(E35) – I1+S(E34) | INJ3(E16) – IJ1+(E14)<br>INJ3(E16) – I1+S(E34)<br>IJ03(E36) – IJ1+(E14)<br>IJ03(E36) – I1+S(E34) | INJ5(E17) – IJ1+(E14)<br>INJ5(E17) – I1+S(E34)<br>IJ05(E37) – IJ1+(E14)<br>IJ05(E37) – I1+S(E34) |
| **#4 injector** | **#5 injector** | **#6 injector** |
| INJ2(E19) – IJ2+(E18)<br>INJ5(E19) – I2+S(E38)<br>IJ02(E39) – IJ2+(E18)<br>IJ02(E39) – I2+S(E38) | INJ6(E60) – IJ2+(E18)<br>INJ6(E60) – I2+S(E38)<br>IJ06(E80) – IJ2+(E18)<br>IJ06(E80) – I2+S(E38) | INJ4(E20) – IJ2+(E18)<br>INJ4(E20) – I2+S(E38)<br>IJ04(E40) – IJ2+(E18)<br>IJ04(E40) – I2+S(E38) |

**Do the measurements meet the standard value?**

**YES**

**Go to step 3.**

**NO**

**Go to step 4.**

| 3 | Check the DTC detected (Engine ECU) |
|---|---|

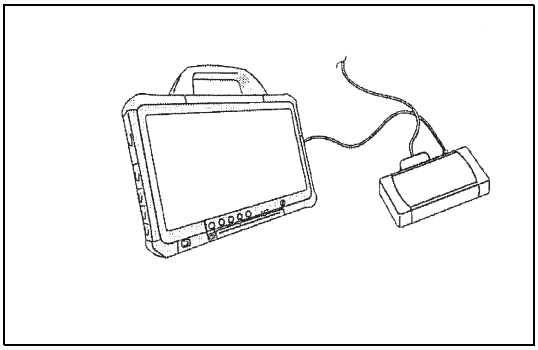

SAPH16F010300297

1. Perform engine warm-up. (engine coolant temperature: 60 °C {140 °F} or more)
2. Stop the engine and set the starter switch to the "LOCK" position.
3. Connect the vehicle to HINO DX II .
4. Set the starter switch to the "ON" position.
5. Select [Engine] and check if the DTC (P0201, P0202, P0203, P0204, P0205 and P0206) has been detected.

**Has DTC (P0201, P0202, P0203, P0204, P0205 and P0206) has been detected?**

**YES**

**Replace the engine ECU.**
**Perform "After-inspection work" of INFORMATION section.**

**NO**

**Procedure completed.**
**Perform "After-inspection work" of INFORMATION section.**

| 4 | Check for disconnection in wire harness of injector central connector |
|---|---|

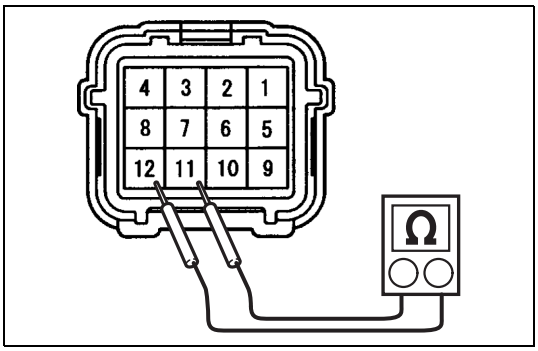


SAPH16F010300298

1. Disconnect the injector central connector.
2. Use the electrical tester to measure the resistance between the terminals in the injector central connector (engine side).

| Measurement conditions | Tester connections | Standard values |
|---|---|---|
| **Starter switch: LOCK** | **Injector central connector (engine side)**<br>**#1 injector: 11 – 12**<br>**#2 injector: 3 – 4**<br>**#3 injector: 5 – 6**<br>**#4 injector: 7 – 8**<br>**#5 injector: 1 – 2**<br>**#6 injector: 9 – 10** | **2 Ω or less** |

**Do the measurements meet the standard value?**

**YES**

**Repair or replace the wire harness between the injector central connector and engine ECU.**
**Perform "After-inspection work" of INFORMATION section.**

**NO**

**Go to step 5.**

| 5 | Inspect disconnection of the injector harness |
|---|---|

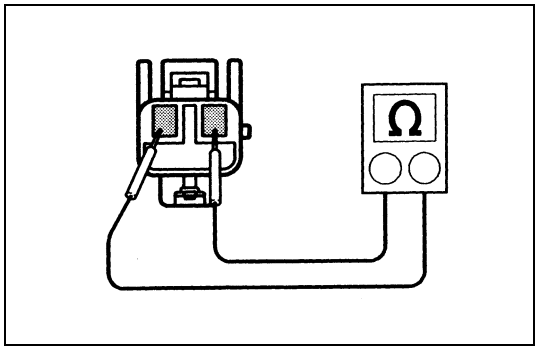

SAPH16F010300299

1. Disconnect the target's injector harness connector.
2. Use the electrical tester to measure the resistance between the terminals in the target's injector harness connector (injector side).

| Measurement conditions | Tester connections | Standard values |
|---|---|---|
| Starter switch: LOCK | Injector harness connector (injector side) terminals | 20 °C {68 °F}: 0.37 – 0.57 Ω |

**Do the measurements meet the standard value?**

**YES**

**Repair or replace the wire harness between the injector central connector and injector harness connector.**
**Perform "After-inspection work" of INFORMATION section.**

**NO**

**Go to step 6.**

| 6 | Inspect the injector unit |
|---|---|

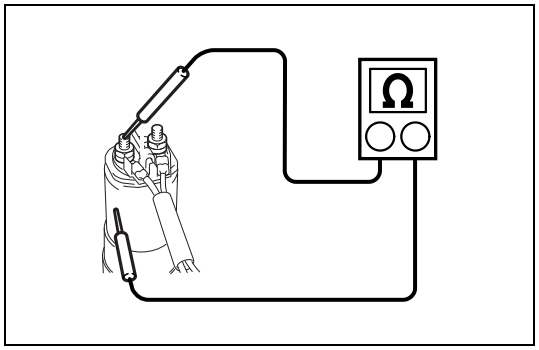

SAPH16F010300300

1. Measure the resistance between the target's injector terminal and the injector body.

| Measurement conditions | Tester connections | Standard values |
|---|---|---|
| Starter switch: LOCK | Injector terminal – injector body | More than 10 MΩ |

**Do the measurements meet the standard value?**

**YES**

**Repair or replace the target's injector harness.**
**Perform "After-inspection work" of INFORMATION section.**

**NO**

**Replace the injector.**
**Perform "After-inspection work" of INFORMATION section.**

# DTC: P0217

EN01H16F01030F03001054

## P0217: Engine coolant over temperature condition

INFORMATION

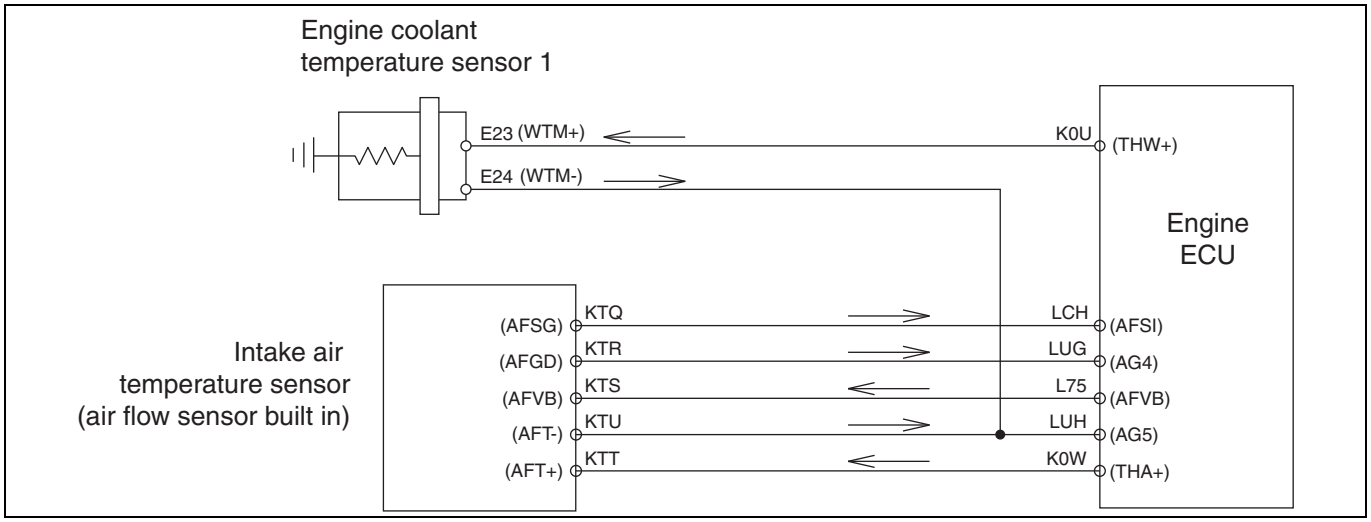


SAPH16F010300301

**1. Technical description**

- Measure the engine coolant temperature with the coolant temperature sensor.

**<Description of malfunction>**

- Engine overheating is detected.

**2. DTC set condition**

(1) DTC detection condition

- The engine must not be stopped.

(2) Judgment criteria

- The coolant temperature value of the engine coolant temperature sensor is above 115 °C {239 °F} for 30 seconds.

**3. Reset condition**

- After normal operation is restored

**4. Indication, warning or system control regulation when the DTC is set.**

- MIL: OFF
- SVS light: ON
- Engine output is restricted.
- Cruise control function is not available.
- Idling stop system is not available.

**5. Symptoms on the vehicle when the DTC is set**

**<Symptoms on the vehicle due to backup control (fail safe function)>**

- Engine output is insufficient.
- Cruise control does not work.
- Idling stop system does not work.
- Engine stops after a constant time (about 5 seconds).

**<Symptoms on the vehicle due to malfunction>**

- –

**6. Pre-inspection work**

- Check that the battery voltage is in the normal range.

**7. After-inspection work**

- Clear all past DTCs.
- Check that no DTC is stored after test drive.

**8. Estimated failure factors**

(1) Check for the relevant symptom by referring to "Engine Overheating" in the "Engine Introduction/Troubleshooting" Workshop Manual.
- Faulty coolant-related component
- Faulty cooling system
- Faulty injection system
- Faulty lubricating system

(2) Malfunction of cooling fan, malfunction of fan clutch
(3) Malfunction of coolant temperature sensor

## INSPECTION PROCEDURE: P0217

**1 Inspect the engine**

1. Refer to "Engine Overheating" in the "Engine Introduction/Trouble-shooting" Workshop Manual and check the related problem areas.

**Was any failure found?**

**YES**

**Repair or replace the faulty part.**
**Perform "After-inspection work" of INFORMATION section.**

**NO**

**Go to step 2.**

**2 Inspect the cooling fan**

1. Check the installation and damage condition of the cooling fan.

**Was any failure found?**

**YES**

**Properly install the cooling fan.**
**Replace the cooling fan if it is damaged.**
**Perform "After-inspection work" of INFORMATION section.**

**NO**

**Go to step 3.**

**3 Inspect the fan clutch**

1. Check the installation condition of the cooling fan clutch and check for silicone oil leakage from the clutch.

**Was any failure found?**

**YES**

**Properly install the cooling fan clutch.**
**Replace the cooling fan clutch if it is leaking.**
**Perform "After-inspection work" of INFORMATION section.**

**NO**

**Go to step 4.**

| 4 | Inspect the coolant temperature sensor connector |
|---|---|

1. Check the connection of the engine coolant temperature sensor connector (Looseness and poor contact).

**Was any failure found?**

**YES**

**Connect securely, repair if needed.**
**Perform "After-inspection work" of INFORMATION section.**

**NO**

**Go to step 5.**

| 5 | Inspect the engine coolant temperature sensor |
|---|---|

1. Check the installation of the engine coolant temperature sensor.
2. Make sure there is no dirt or damage to the engine coolant temperature sensor.

**Was any failure found?**

**YES**

**Clean the engine coolant temperature sensor and install it properly.**
**If damaged, replace the engine coolant temperature sensor.**
**Perform "After-inspection work" of INFORMATION section.**

**NO**

**Go to step 6.**

| 6 | Inspect the engine coolant temperature sensor unit |
|---|---|

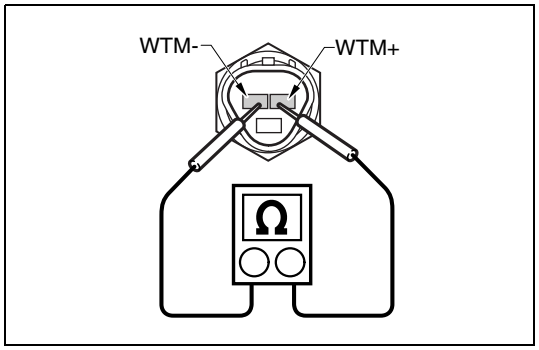


SAPH16F010300302

1. Set the starter switch to the "LOCK" position.
2. Disconnect the engine coolant temperature sensor connector.
3. Use the electrical tester to measure the resistance between the terminals of the engine coolant temperature sensor.

| Measurement conditions | Tester connections | Standard values |
|---|---|---|
| Starter switch: LOCK | Engine coolant temperature sensor WTM+ – WTM- | 20 °C {68 °F}: 2.59 – 2.32 kΩ<br>80 °C {176 °F}: 0.326 – 0.310 kΩ |

**Do the measurements meet the standard value?**

YES

**Go to step 7.**

NO

**Replace the engine coolant temperature sensor.**
**Perform "After-inspection work" of INFORMATION section.**

| 7 | **Check the DTC detected (Engine ECU) [HINO DX II ]** |
|---|---|

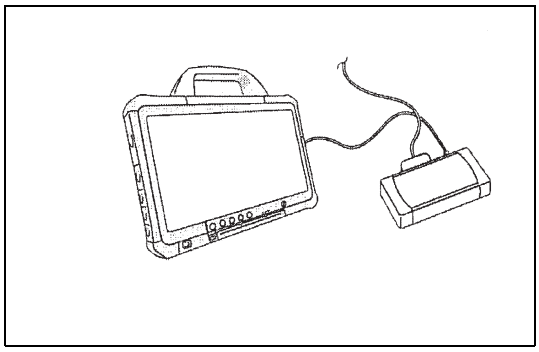

SAPH16F010300303

1. Perform engine warm-up. (engine coolant temperature: 60 °C {140 °F} or more)
2. Stop the engine and set the starter switch to the "LOCK" position.
3. Connect the vehicle to HINO DX II .
4. Set the starter switch to the "ON" position.
5. Select [Engine] and check if P0217 has been detected.

**Has DTC P0217 been detected?**

YES

**Replace the engine ECU.**
**Perform "After-inspection work" of INFORMATION section.**

NO

**Procedure completed.**
**Perform "After-inspection work" of INFORMATION section.**

# DTC: P0219

EN01H16F01030F03001055

## P0219: Engine overspeed condition

INFORMATION

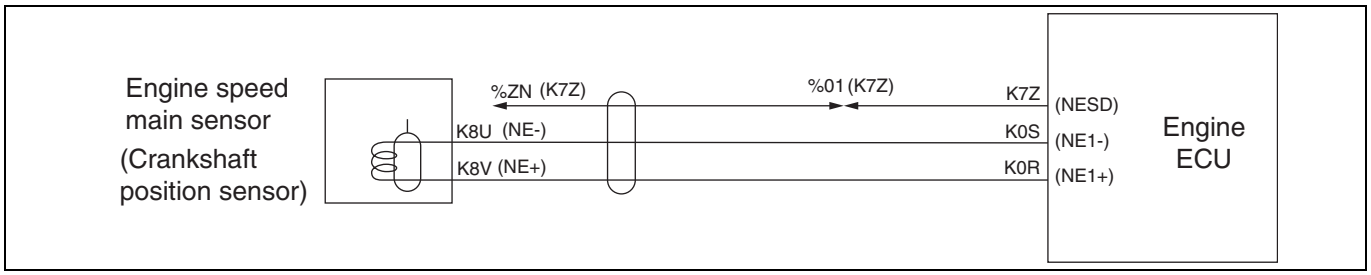


SAPH16F010300304

**1. Technical description**

- The engine ECU detects the engine speed using the engine speed main sensor (crankshaft position sensor) mounted on the flywheel housing.

**<Description of malfunction>**

- Engine speed above rated value is detected.

**2. DTC set condition**

(1) DTC detection condition

- While the engine is in operation

(2) Judgment criteria

- An engine speed of more than 3,000 r/min

**3. Reset condition**

- After restoration to normal condition.

**4. Indication, warning or system control regulation when the DTC is set.**

- MIL: OFF
- SVS light: OFF
- Cruise control function is not available.

**5. Symptoms on the vehicle when the DTC is set**

**<Symptoms on the vehicle due to backup control (fail safe function)>**

- Cruise control does not work.

**<Symptoms on the vehicle due to malfunction>**

- –

**6. Pre-inspection work**

- Check that the battery voltage is in the normal range.

**7. After-inspection work**

- Clear all past DTCs.
- Check that no DTC is stored after test drive.

**8. Estimated failure factors**

- Miss-shift (MT vehicle)
- Operated with excessive engine oil running around to the air intake system.
- Irregular contact of connector and harness
- Malfunction of engine speed main sensor (crankshaft position sensor)

## INSPECTION PROCEDURE: P0219

| 1 | Inspect the engine oil level |
|---|---|

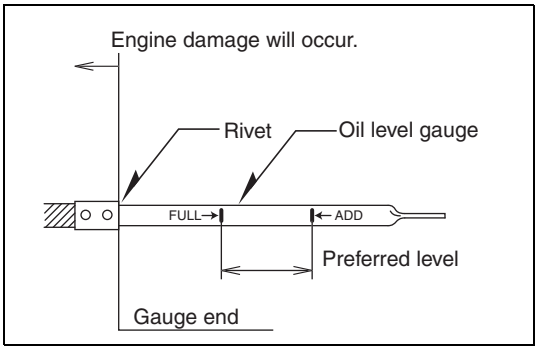


SAPH16F010300305

1. Check the oil level gauge and make sure the engine oil quantity is within the standard value.

**Is the engine oil quantity within the standard value?**

**YES**

**Go to step 2.**

**NO**

**Adjust the engine oil quantity according to the standard value.**
**Perform "After-inspection work" of INFORMATION section.**

| 2 | Inspect the engine speed main sensor connector |
|---|---|

1. Check the connection of the engine speed main sensor connector (Looseness and poor contact).

**Was any failure found?**

**YES**

**Connect securely, repair if needed.**
**Perform "After-inspection work" of INFORMATION section.**

**NO**

**Go to step 3.**

| 3 | Check the engine speed main sensor |
|---|---|

1. Check the installation of the engine speed main sensor.
2. Make sure there is no dirt or damage to the engine speed main sensor.

**Was any failure found?**

**YES**

**Clean the engine speed main sensor and install it properly.**
**If damaged, replace the engine speed main sensor.**
**Perform "After-inspection work" of INFORMATION section.**

**NO**

**Go to step 4.**

| 4 | Inspect the engine speed main sensor power supply |
|---|---|

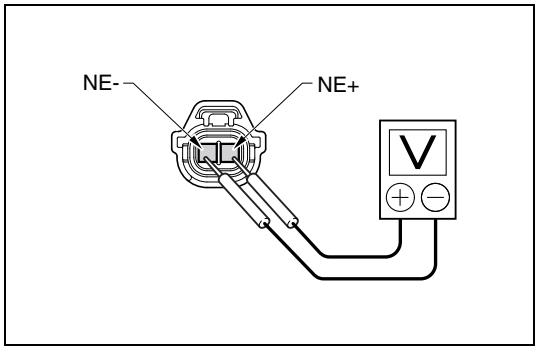

SAPH16F010300306

1. Set the starter switch to the "LOCK" position.
2. Disconnect the engine speed main sensor connector.
3. Set the starter switch to the "ON" position.
4. Use the electrical tester to measure the voltage between the terminals of the engine speed main sensor vehicle-side connector.

| Measurement conditions | Tester connections | Standard values |
|---|---|---|
| Starter switch: ON | Engine speed main sensor vehicle-side connector NE+ – NE- | 4.5 – 5.5 V |

**Do the measurements meet the standard value?**

**YES**

**Go to step 7.**

**NO**

**Go to step 5.**

| 5 | Check for disconnection in wire harness of engine speed main sensor |
|---|---|

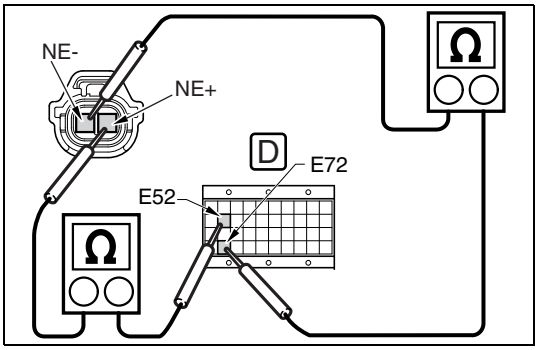

SAPH16F010300307

1. Set the starter switch to the "LOCK" position.
2. Connect the signal check harness to the engine ECU vehicle-side harness. (Do not connect the harness to the ECU.)
3. Use the electrical tester to measure the resistance between the engine ECU (signal check harness) and each terminal in the engine speed main sensor vehicle-side connector.

| Measurement conditions | Tester connections | Standard values |
|---|---|---|
| **Starter switch: LOCK** | **Engine ECU (signal check harness) – Engine speed main sensor vehicle-side connector NE1+(E52) – NE+ NE1-(E72) – NE-** | **Less than 2 Ω** |

**Do the measurements meet the standard value?**

**YES**

**Go to step 6.**

**NO**

**Repair or replace the harness. Perform "After-inspection work" of INFORMATION section.**

| 6 | Check for short-circuit in wire harness of engine speed main sensor |
|---|---|

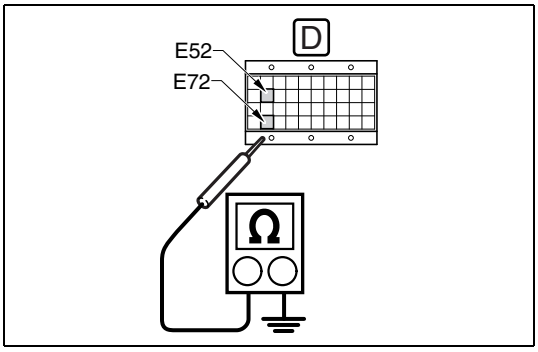

SAPH16F010300308

1. Use the electrical tester to measure the resistance between each terminal in the engine ECU (signal check harness) and ground.

| Measurement conditions | Tester connections | Standard values |
|---|---|---|
| **Starter switch: LOCK** | **Engine ECU (signal check harness) NE1+(E52) – Ground NE1-(E72) – Ground** | **∞ Ω** |

**Do the measurements meet the standard value?**

**YES**

**Go to step 7.**

**NO**

**Repair or replace the harness. Perform "After-inspection work" of INFORMATION section.**

| 7 | Check the engine speed main sensor signal |
|---|---|

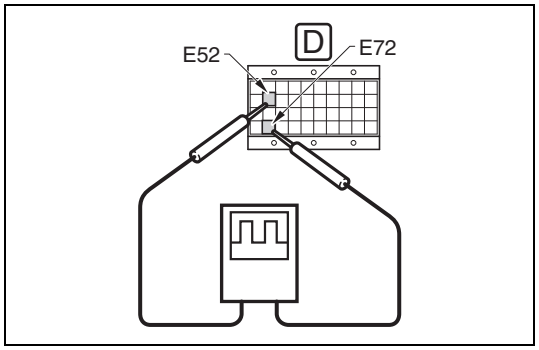


SAPH16F010300309

1. Connect the signal check harness to the engine ECU.
2. Connect the engine speed main sensor connector.
3. Start the engine.
4. Use the oscilloscope to measure the voltage between the terminals of the engine ECU (signal check harness).

| Measurement conditions | Tester connections | Standard values |
|---|---|---|
| **Engine idling** | **Engine ECU (signal check harness) NE1+(E52) – NE1-(E72)** | **56 pulse** |

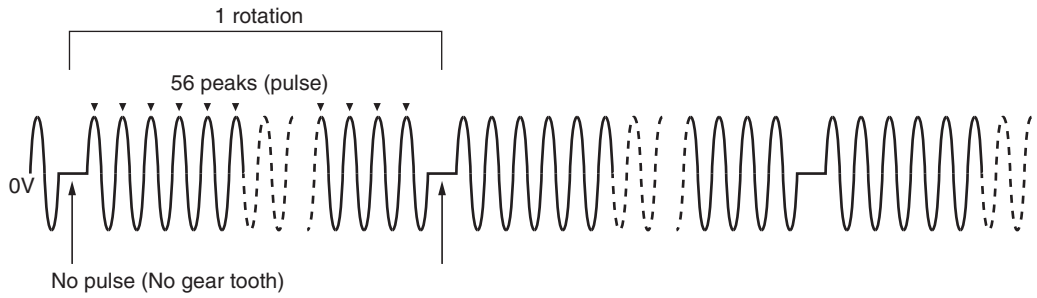


SAPH16F010300310

**Do the measurements meet the standard value?**

**YES**

**Go to step 8.**

**NO**

**Replace the engine speed main sensor. Perform "After-inspection work" of INFORMATION section.**

| 8 | Check the DTC detected (Engine ECU) [HINO DX II ] |
|---|---|

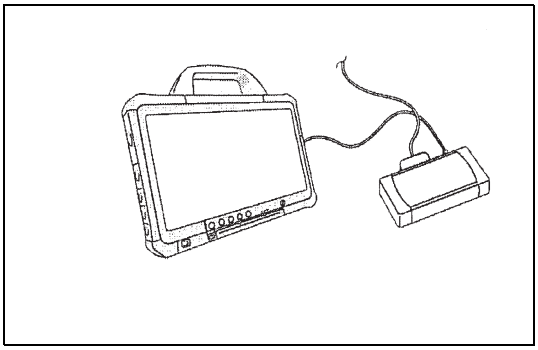

SAPH16F010300311

1. Warm-up the engine. (engine coolant temperature: 60 °C {140 °F} or more)
2. Stop the engine and the starter switch to the "LOCK" position.
3. Connect the vehicle to HINO DX II .
4. Set the starter switch to the "ON" position.
5. Select [Engine] and check if P0219 has been detected.

**Has DTC P0219 been detected?**

**YES**

**Replace the engine ECU.**
**Perform "After-inspection work" of INFORMATION section.**

**NO**

**Procedure completed.**
**Perform "After-inspection work" of INFORMATION section.**

# DTC: P0222 and P0223

EN01H16F01030F03001056

## P0222: Intake throttle valve position sensor 2 - out of range (Out of range low)

INFORMATION

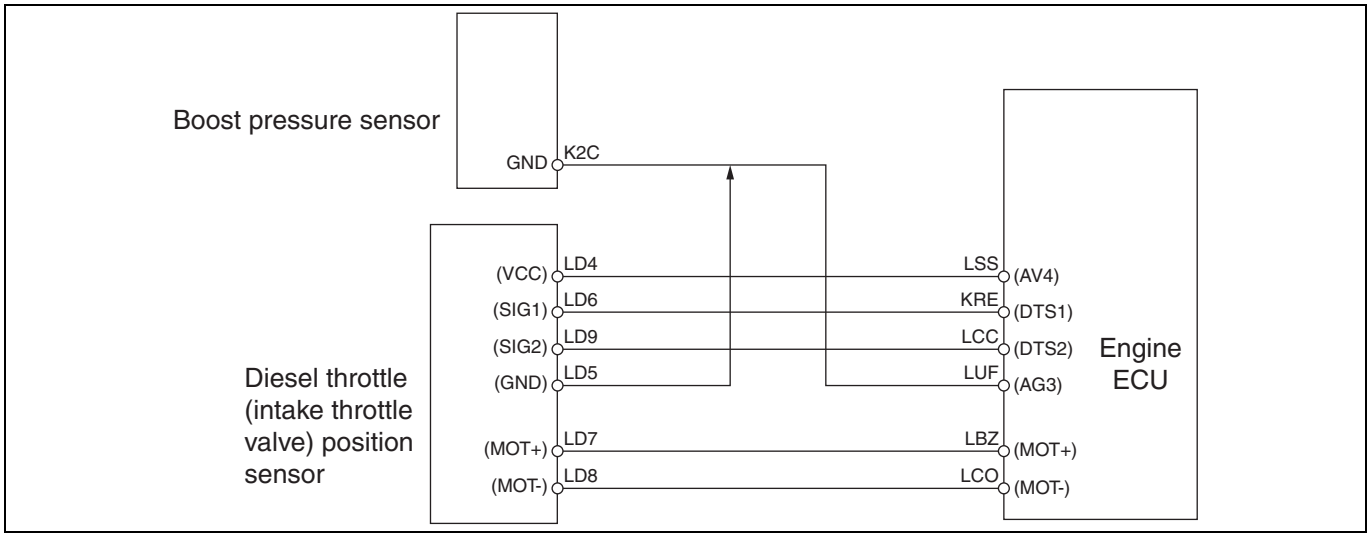


SAPH16F010300312

**1. Technical description**

- The diesel throttle (intake throttle) controls valves steplessly to control boost pressure and intake air volume.
- Inside the diesel throttle, a sensor designed to detect a travel of the valve consistently monitors an actual opening to compare with command value.

**<Description of malfunction>**

- Low voltage failure of diesel throttle (intake throttle valve) position sensor is detected.

**2. DTC set condition**

(1) DTC detection condition

- Starter switch ON.
- Battery voltage is in the range of 10 V to 16 V.

The conditions described above remain for 5 seconds or longer.

(2) Judgment criteria

- Output of the sensor remains at 0.2 V (5 degrees) or less for 3 seconds or longer.

**3. Reset condition**

- After normal operation is restored and engine is restarted after engine stall.

**4. Indication, warning or system control regulation when the DTC is set.**

- MIL: ON
- SVS light: OFF

**5. Symptoms on the vehicle when the DTC is set**

**<Symptoms on the vehicle due to backup control (fail safe function)>**

- –

**<Symptoms on the vehicle due to malfunction>**

- –

**6. Pre-inspection work**

- Check that the battery voltage is in the normal range.

**7. After-inspection work**

- Clear all past DTCs.
- Check that no DTC is stored after test drive.

**8. Estimated failure factors**

- Abnormal resistance of sensor
- Disconnection or short-circuit in sensor harness
- Failure in engine ECU sensor power supply or internal circuit
- Looseness or poor contact of connector

## P0223: Intake throttle valve position sensor 2 - out of range (Out of range high)

INFORMATION

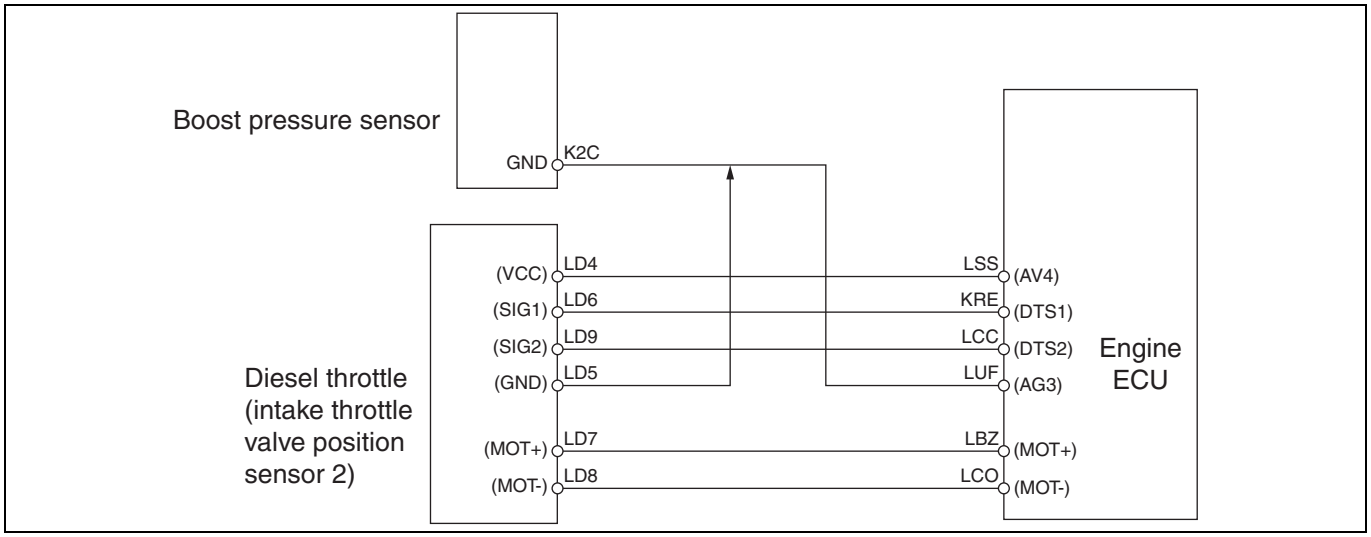


SAPH16F010300313

**1. Technical description**

- The diesel throttle (intake throttle) controls valves steplessly to control boost pressure and intake air volume.
- Inside the diesel throttle (intake throttle), a sensor designed to detect a travel of the valve consistently monitors an actual opening to compare with command value.

**<Description of malfunction>**

- Abnormally high voltage of diesel throttle (intake throttle valve) position sensor is detected.

**2. DTC set condition**

(1) Check conditions

- Starter switch ON.
- Battery voltage is in the range of 10 V to 16 V.

The conditions described above remain for 5 seconds or longer.

(2) Judgment criteria

- Output of the sensor remains at 4.8 V (120 degrees) or less for 3 seconds or longer.

**3. Reset condition**

- After normal operation is restored and engine is restarted after engine stall.

**4. Indication, warning or system control regulation when the DTC is set.**

- MIL: ON
- SVS light: OFF

**5. Symptoms on the vehicle when the DTC is set**

**<Symptoms on the vehicle due to backup control (fail safe function)>**

- –

**<Symptoms on the vehicle due to malfunction>**

- –

**6. Pre-inspection work**

- Check that the battery voltage is in the normal range.

**7. After-inspection work**

- Clear all past DTCs.
- Check that no DTC is stored after test drive.

**8. Estimated failure factors**

- Abnormal resistance of sensor
- Disconnection or short-circuit in sensor harness
- Sensor internal short-circuit
- Engine ECU internal circuit failure

## INSPECTION PROCEDURE: P0222 and P0223

| 1 | Inspect the intake throttle valve position sensor 2 connector |
|---|---|

1. Check the connection of the intake throttle valve position sensor 2 connector (Looseness and poor contact).

**Was any failure found?**

**YES**

**Connect securely, repair if needed.**
**Perform "After-inspection work" of INFORMATION section.**

**NO**

**Go to step 2.**

| 2 | Inspect the intake throttle valve position sensor 2 |
|---|---|

1. Check the installation of the intake throttle valve position sensor 2.
2. Make sure there is no dirt or damage to the intake throttle valve position sensor 2.

**Was any failure found?**

**YES**

**Clean the intake throttle valve position sensor 2 and install it properly.**
**If damaged, replace the intake throttle valve position sensor 2.**
**Perform "After-inspection work" of INFORMATION section.**

**NO**

**Go to step 3.**

| 3 | Inspect the intake throttle valve position sensor 2 unit |
|---|---|

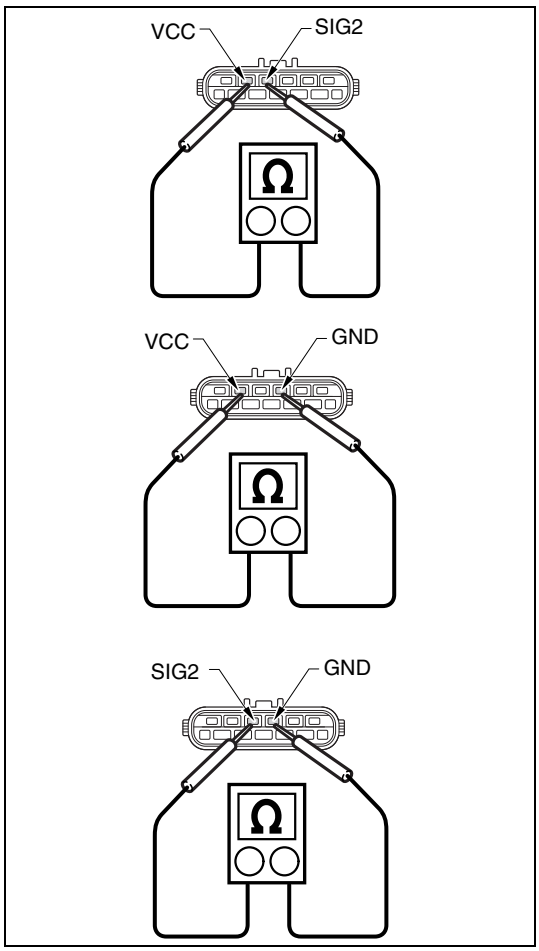


SAPH16F010300314

1. Set the starter switch to the "LOCK" position.
2. Disconnect the intake throttle valve position sensor 2 connector.
3. Use the electrical tester to measure the resistance between the terminals of the intake throttle valve position sensor 2.

| Measurement conditions | Tester connections | Standard values |
|---|---|---|
| **Starter switch: LOCK** | **Intake throttle valve position sensor 2<br>(1) VCC – SIG2<br>(2) VCC – GND<br>(3) SIG2 – GND** | **(1) 180 Ω<br>(2) 3 kΩ<br>(3) 3 kΩ** |

**Do the measurements meet the standard value?**

**YES**

**Go to step 4.**

**NO**

**Replace the intake throttle valve position sensor 2.**
**Perform "After-inspection work" of INFORMATION section.**

| 4 | Inspect the intake throttle valve position sensor 2 power supply |
|---|---|

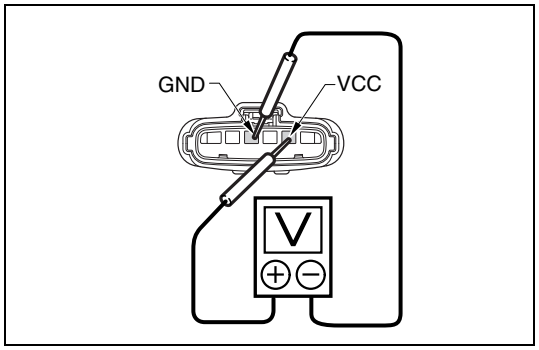

SAPH16F010300315

1. Set the starter switch to the "ON" position.
2. Use the electrical tester to measure the voltage between the terminals of the intake throttle valve position sensor 2 vehicle-side connector.

| Measurement conditions | Tester connections | Standard values |
|---|---|---|
| Starter switch: ON | Intake throttle valve position sensor 2 vehicle-side connector VCC – GND | 4.5 – 5.5 V |

**Do the measurements meet the standard value?**

**YES**

**Go to step 5.**

**NO**

**Go to step 6.**

| 5 | Inspect the intake throttle valve position sensor 2 signal circuit |
|---|---|

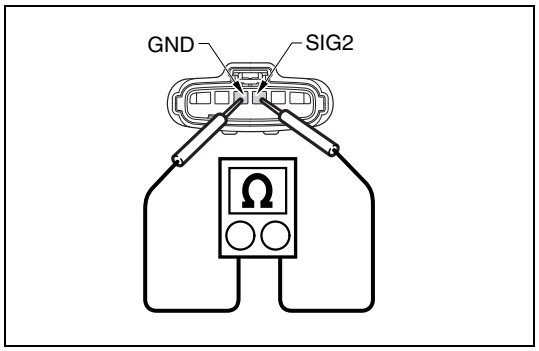

SAPH16F010300316

1. Set the starter switch to the "LOCK" position.
2. Use the electrical tester to measure the resistance between the terminals of the intake throttle valve position sensor 2 vehicle-side connector.

| Measurement conditions | Tester connections | Standard values |
|---|---|---|
| Starter switch: LOCK | Intake throttle valve position sensor 2 vehicle-side connector SIG2 – GND | 25 – 35 kΩ |

**Do the measurements meet the standard value?**

**YES**

**Go to step 8.**

**NO**

**Go to step 6.**

| 6 | Inspect for short-circuits in wire harness of intake throttle valve position sensor 2 |
|---|---|

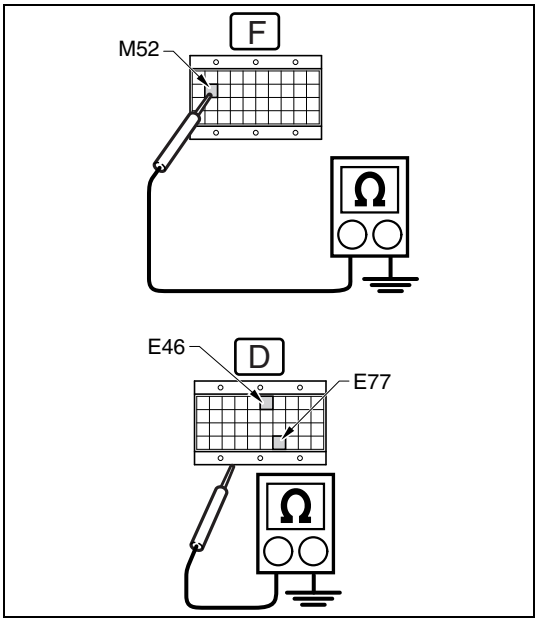


SAPH16F010300317

1. Connect the signal check harness to the engine ECU vehicle-side harness. (Do not connect the harness to the ECU.)

2. Use the electrical tester to measure the resistance between the terminals of the engine ECU (signal check harness) and ground.

| Measurement conditions | Tester connections | Standard values |
|---|---|---|
| **Starter switch: LOCK** | **Engine ECU (signal check harness) AV4(M52) – Ground DTS2(E46) – Ground AG3(E77) – Ground** | ∞ Ω |

**Do the measurements meet the standard value?**

**YES**

**Go to step 7.**

**NO**

**Repair or replace the harness.**
**Perform "After-inspection work" of INFORMATION section.**

| 7 | Inspect for disconnections in wire harness of intake throttle valve |
|---|---|

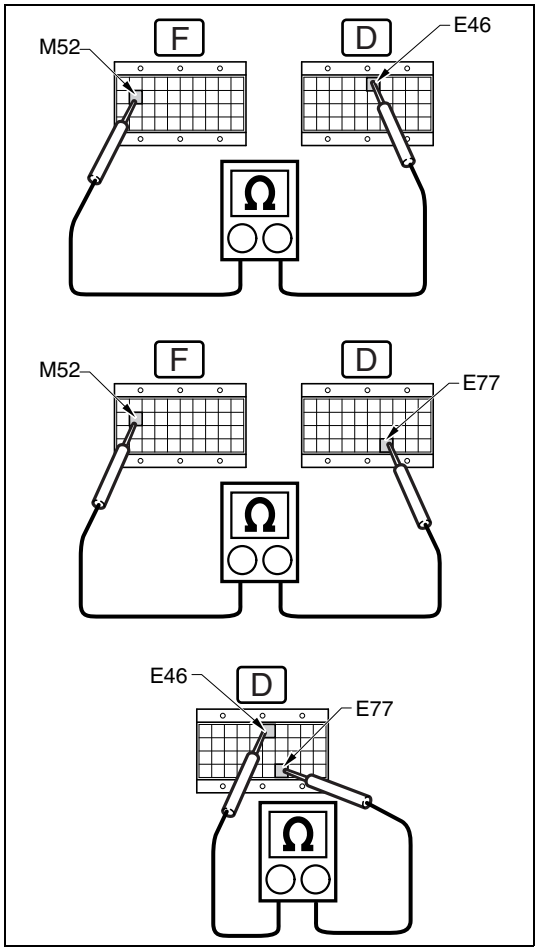


SAPH16F010300318

1. Connect the intake throttle valve position sensor 2 connector.
2. Use the electrical tester to measure the resistance between the terminals of the engine ECU (signal check harness).

| Measurement conditions | Tester connections | Standard values |
|---|---|---|
| **Starter switch: LOCK** | **Engine ECU (signal check harness)<br>(1) AV4(M52) – DTS2(E46)<br>(2) AV4(M52) – AG3(E77)<br>(3) DTS2(E46) – AG3(E77)** | **(1) 2 Ω or more<br>(2) 3 kΩ<br>(3) 3 kΩ** |

**Do the measurements meet the standard value?**

**YES**

**Go to step 8.**

**NO**

**Repair or replace the harness.**
**Perform "After-inspection work" of INFORMATION section.**

| 8 | Check the DTC detected (Engine ECU) [HINO DX II ] |
|---|---|

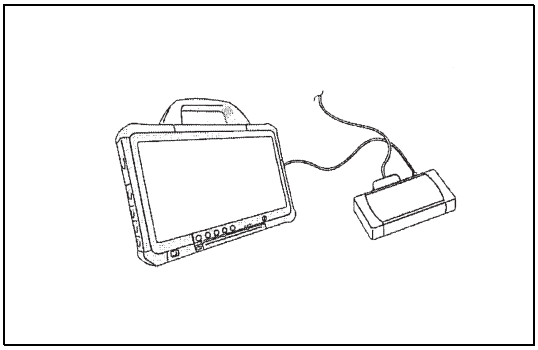

SAPH16F010300319

1. Perform engine warm-up. (engine coolant temperature: 60 °C {140 °F} or more)
2. Stop the engine and set the starter switch to the "LOCK" position.
3. Connect the vehicle to HINO DX II .
4. Set the starter switch to the "ON" position.
5. Select [Engine] and check if the DTC (P0222 or P0223) has been detected.

**Has DTC (P0222 or P0223) been detected?**

**YES**

**Replace the engine ECU.**
**Perform "After-inspection work" of INFORMATION section.**

**NO**

**Procedure completed.**
**Perform "After-inspection work" of INFORMATION section.**

# DTC: P0234

EN01H16F01030F03001057

## P0234: Overboost

INFORMATION

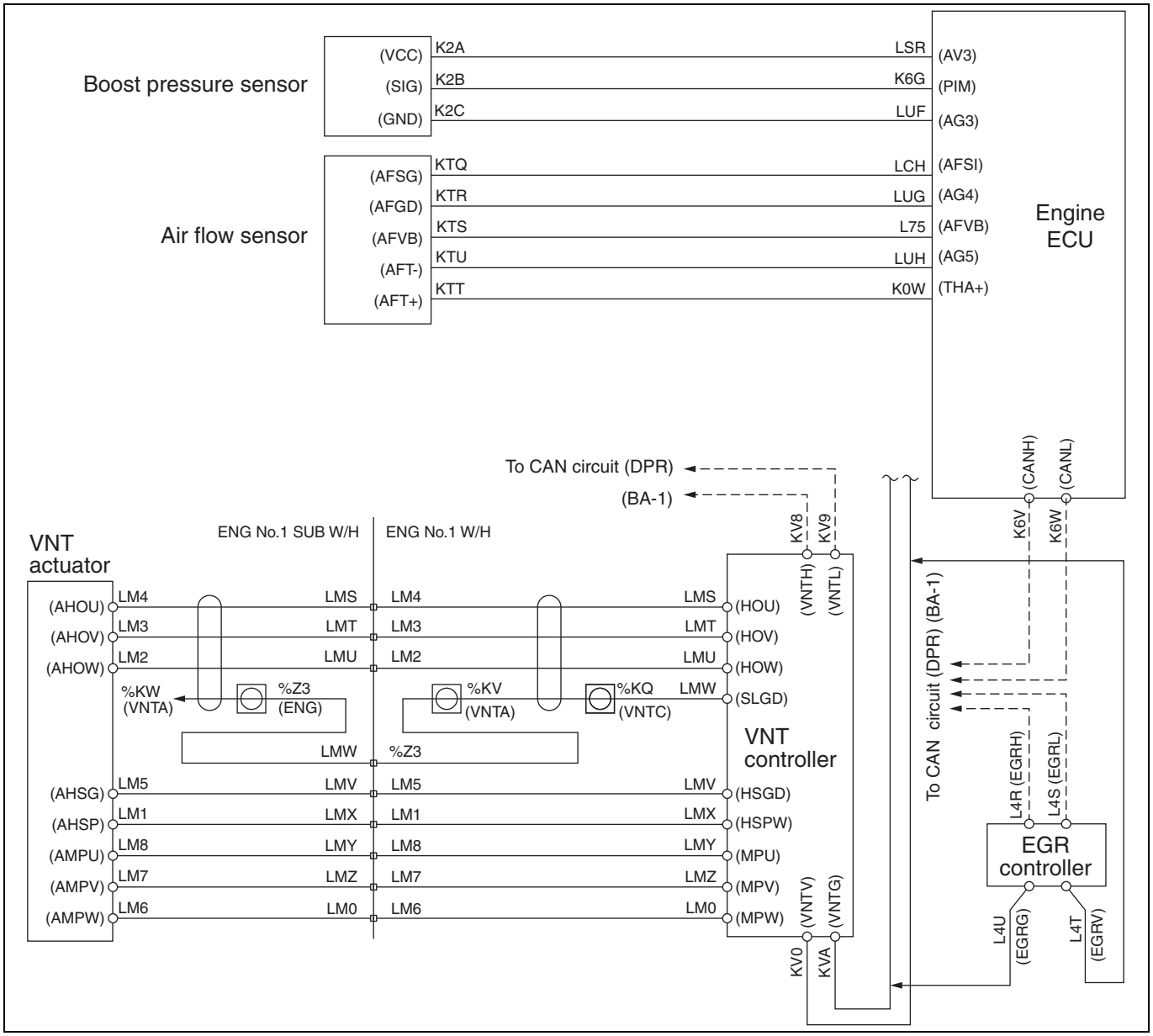


SAPH16F010300320

### 1. Technical description

- The VNT moves the nozzle vane steplessly by the REA (Rotary Electric Actuator) to control the turbo speed and boost pressure. It observes a deviation between the target boost pressure and actual boost pressure to check if the actual pressure is higher than the target pressure.

**<Description of malfunction>**

- Boost pressure is higher than the stipulated value.

**2. DTC set condition**

(1) DTC detection condition

- At all times when engine is running (Detectable 10 minutes after engine start-up)

(2) Judgment criteria

- Boost pressure value above threshold value is detected (abnormally high).
- Deviation between target boost pressure and actual boost pressure: 37 – 45 kPa {5.4 – 6.5 psi}.

**3. Reset condition**

- After normal operation is restored and the starter switch is on the "LOCK" position.

**4. Indication, warning or system control regulation when the DTC is set.**

- MIL: ON
- SVS light: OFF
- Engine output is restricted.

**5. Symptoms on the vehicle when the DTC is set**

**<Symptoms on the vehicle due to backup control (fail safe function)>**

- Engine output is insufficient.

**<Symptoms on the vehicle due to malfunction>**

- Turbocharger noise or damage
- Insufficient output or engine stall because of DPR filter clogging due to abnormal soot generation

**6. Pre-inspection work**

- Check that the battery voltage is in the normal range.

**7. After-inspection work**

- Clear all past DTCs.
- Check that no DTC is detected after test drive.

**8. Estimated failure factors**

- VNT actuator failure (VNT nozzle closed-side failure)
- EGR valve failure (EGR valve closed-side failure)
- Clogged boost pressure sensor hose
- Boost pressure sensor failure (abnormal voltage, power supply or ground fault)

## INSPECTION PROCEDURE: P0234

| 1 | Check the DTC detected (Engine ECU) [HINO DX II ] |
|---|---|

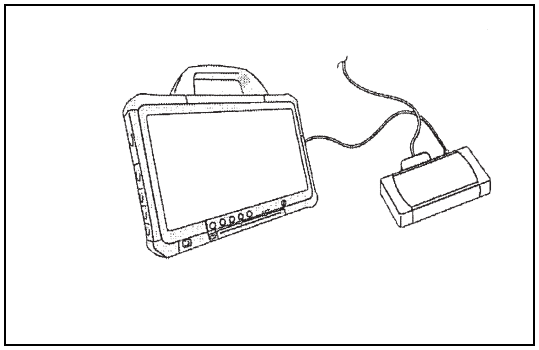

SAPH16F010300321

1. Set the starter switch to the "LOCK" position.
2. Connect the vehicle to HINO DX II .
3. Set the starter switch to the "ON" position.
4. Select [Engine] and check if any DTC other than P0234 (for example, P0045, P0401) has been detected.

**Has a DTC other than P0234 been detected?**

**YES**

**Go to the diagnostic procedure of a related DTC.**

**NO**

**Go to step 2.**

| 2 | Inspect the boost pressure sensor hose. |
|---|---|

1. Make sure the boost pressure sensor hose is not clogged, ruptured, or cracked.
2. Make sure the pipe on the intake manifold side is not clogged.

**Was any failure found?**

**YES**

**1. Replace the boost pressure sensor hose.**
**2. Clean the intake manifold pipe.**
**Perform "After-inspection work" of INFORMATION section.**

**NO**

**Go to step 3.**

| 3 | Inspect the boost pressure sensor power supply system |
|---|---|

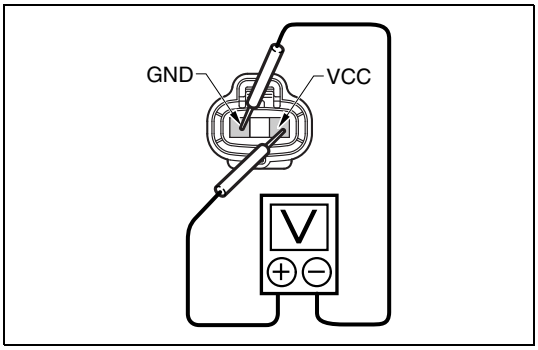


SAPH16F010300322

1. Set the starter switch to the "LOCK" position.
2. Disconnect the boost pressure sensor connector.
3. Set the starter switch to the "ON" position.
4. Use the electrical tester to measure the voltage between the terminals of the boost pressure sensor vehicle-side connector.

| Measurement conditions | Tester connections | Standard values |
|---|---|---|
| **Starter switch: ON** | **Boost pressure sensor vehicle-side connector VCC – GND** | **4.75 – 5.25 V** |

**Do the measurements meet the standard value?**

**YES**

**Go to step 4.**

**NO**

**Inspect the harness and engine ECU. Perform "After-inspection work" of INFORMATION section.**

| 4 | Inspect the response delay of the VNT controller [HINO DX II ] |
|---|---|

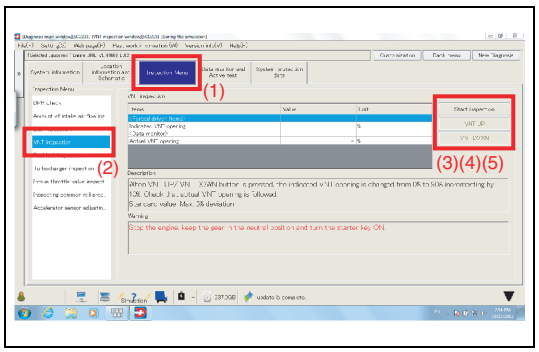


SAPH16F010300323

1. Set the starter switch to the "LOCK" position.
2. Connect the vehicle to HINO DX II .
3. Set the starter switch to the "ON" position and select [Engine].
4. Select [Inspection Menu] from the menu, then inspect the response delay at the Target VNT position and Actual VNT position.

**⚠ CAUTION**
**Perform the inspection while the engine is stopped to avoid damages.**

<Inspection procedure>
(1) Select [Inspection Menu].
(2) Select [VNT inspection].
(3) Click [Start inspection].
(4) Select [VNT UP]:
• Inspect the response delay at each step of the Target VNT position and Actual VNT position from 0 to 90 %.
(5) Select [VNT DOWN]:
• Inspect the response delay at each step of the Target VNT position and Actual VNT position from 90 to 0 %.

**HINT**
**The VNT opening position changes of around 10 % per step between 0 – 90 %.**

| Standard values |
|---|
| **From the Target VNT position to the Actual VNT position, the response delay should be within 3 seconds.** |

**Do the measurements meet the standard value?**

| YES | NO |
|---|---|
| **Go to step 5.** | **Replace the turbocharger. Perform "After-inspection work" of INFORMATION section.** |

| 5 | Inspect the response delay of the EGR valve [HINO DX II ] |
|---|---|

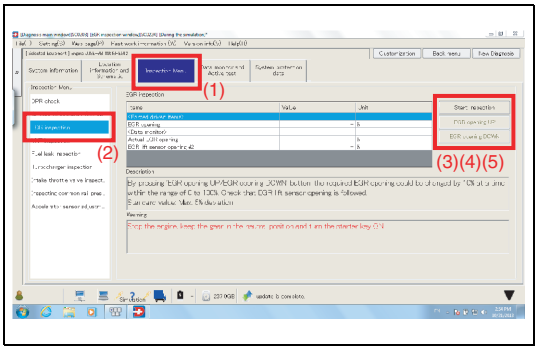


SAPH16F010300324

1. Select [Inspection Menu] and then [EGR inspection] from the menu, then inspect the response delay at the Target EGR position and Actual EGR position.

**⚠ CAUTION**
**Perform the inspection while the engine is stopped to avoid damages.**

<Inspection procedure>
(1) Select [Inspection Menu].
(2) Select [EGR inspection].
(3) Click [Start inspection].
(4) Click [EGR opening UP]:
• Inspect the response delay at each step of the Target EGR position and Actual EGR position from 0 to 100 %.
(5) Click [EGR opening DOWN]:
• Inspect the response delay at each step of the Target EGR position and Actual EGR position from 100 to 0 %.

**HINT**
**The EGR opening position changes of around 10 % per step between 0 – 100 %.**

| Standard values |
|---|
| **From the Target EGR position to the Actual EGR position, the response delay should be within 5 seconds.** |

**Do the measurements meet the standard value?**

**YES**

**Check that P0234 is not detected again to complete the check.**
**Perform "After-inspection work" of INFORMATION section.**

**NO**

**Replace the EGR valve.**
**Perform "After-inspection work" of INFORMATION section.**

# DTC: P0263, P0266, P0269, P0272, P0275 and P0278

EN01H16F01030F03001058

**P0263: #1 Injection quantity and timing**
**P0266: #2 Injection quantity and timing**
**P0269: #3 Injection quantity and timing**
**P0272: #4 Injection quantity and timing**
**P0275: #5 Injection quantity and timing**
**P0278: #6 Injection quantity and timing**
INFORMATION

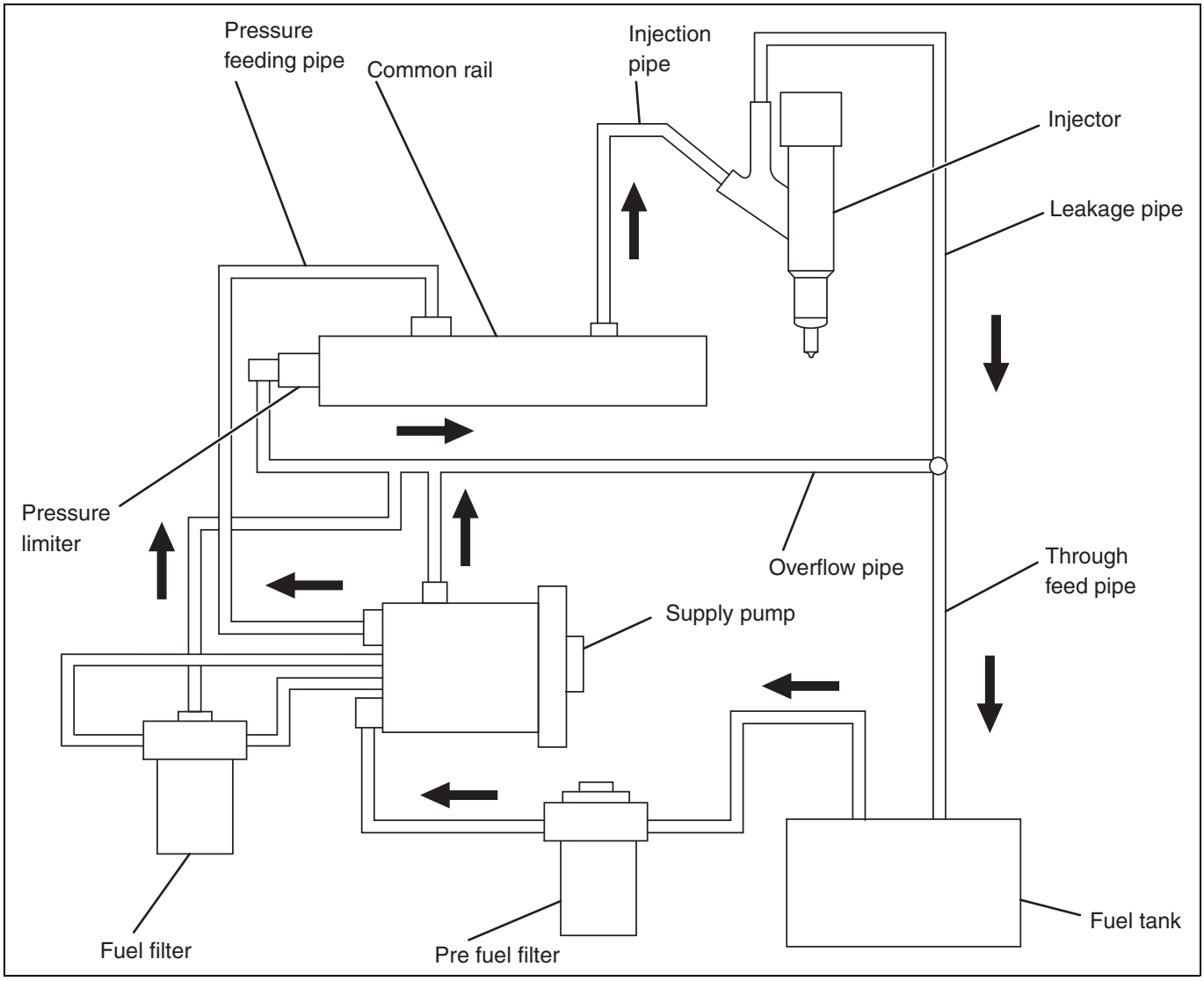


SAPH16F010300325

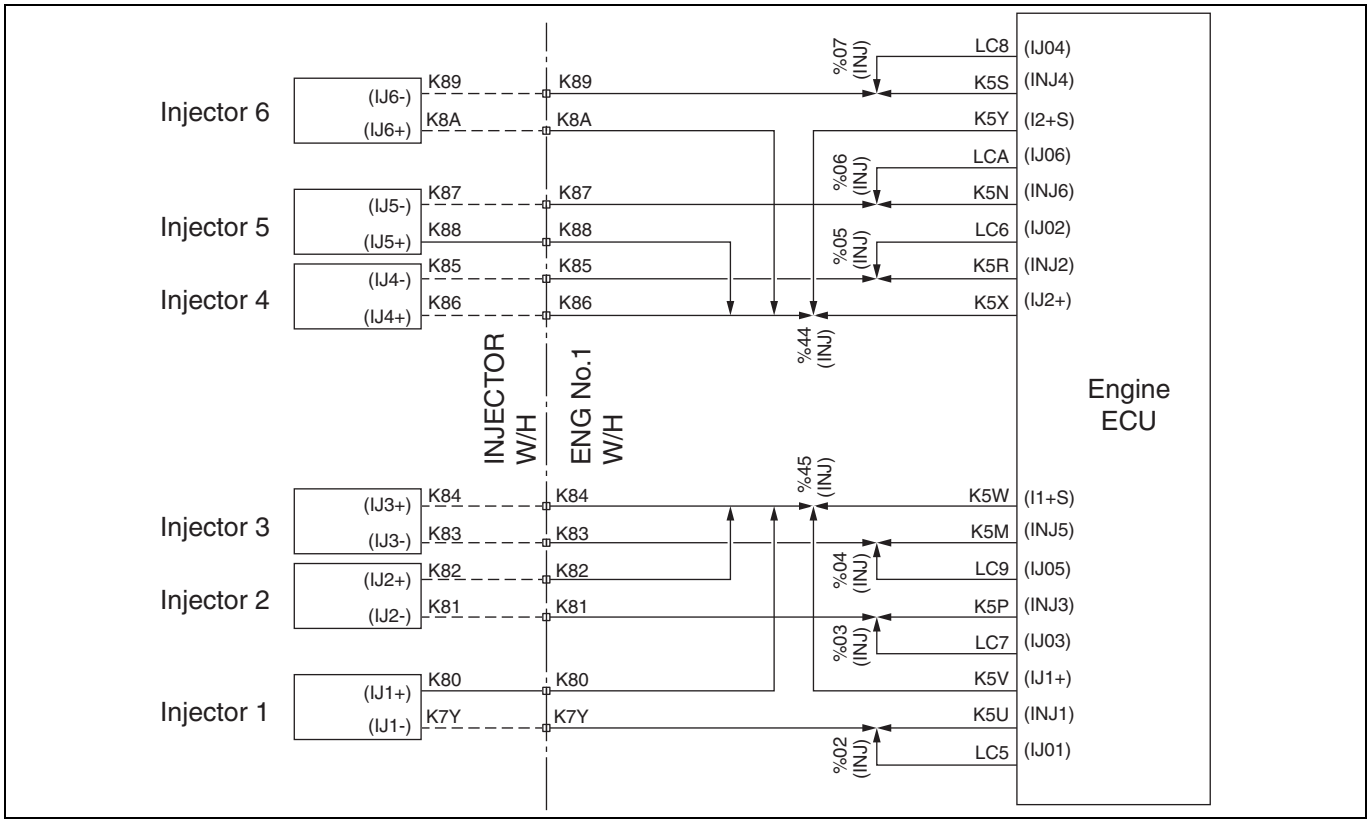


SAPH16F010300326

**1. Technical description**

- The engine speed main sensor (crankshaft position sensor) monitors the speed of each cylinder.
- For control, it increases or reduces the compensation of the injection quantity of each cylinder to make constant the speed of each cylinder.

**<Description of malfunction>**

- If the speed of the #1 cylinder is found abnormal, the DTC P0263 will be detected.
- If the speed of the #2 cylinder is found abnormal, the DTC P0266 will be detected.
- If the speed of the #3 cylinder is found abnormal, the DTC P0269 will be detected.
- If the speed of the #4 cylinder is found abnormal, the DTC P0272 will be detected.
- If the speed of the #5 cylinder is found abnormal, the DTC P0275 will be detected.
- If the speed of the #6 cylinder is found abnormal, the DTC P0278 will be detected.

**2. DTC set condition**

(1) DTC detection condition

1. All the following conditions continue for more than 30 seconds.
   - The engine speed is in the range of 250 to 900 r/min.
   - The fuel injection quantity is within 0 to 50 $mm^3$/st. cyl.
   - The exhaust brake and PTO are inactive.
2. All the following conditions continue for more than 10 seconds.
   - The engine speed is within the below table.
   - Gear position unchanged
   - The fuel injection quantity is less than 30 $mm^3$/st. cyl.
   - The coolant temperature is above 60 °C {140 °F}.
   - The accelerator opening is 0 %.
   - The vehicle speed is 0 mile/h.

- Barometric pressure ≥ 75 kPa {10.8 psi}
- The exhaust brake and PTO are inactive.
- Other diagnostic judgments have not been made (system normal).

**Engine speed (r/min)**

| | MT | TRANS |
|---|---|---|
| **D range** | **N/A** | **725-775** |
| **N range** | **725-775** | **N/A** |
| **P range** | **N/A** | **N/A** |

3. If the rotational speed abnormality measured on each cylinder by the engine speed main sensor (crankshaft position sensor) continued for more than 20 seconds, judge it has malfunction.

(2) Judgment criteria

- If the injection amount exceeds the nominal value for more than 20 seconds. (The nominal value changes according to the engine load and T/M.)

**3. Reset condition**

- After restoration to normal condition.

**4. Indication, warning or system control regulation when the DTC is set.**

- MIL: ON
- SVS light: OFF

**5. Symptoms on the vehicle when the DTC is set**

**<Symptoms on the vehicle due to backup control (fail safe function)>**

- –

**<Symptoms on the vehicle due to malfunction>**

- Excessive vibration while engine is idling.

**6. Pre-inspection work**

- Check that the battery voltage is in the normal range.

**7. After-inspection work**

- Clear all past DTCs.
- Check that no DTC is stored after test drive.

**8. Estimated failure factors**

- Fuel injection line: break, crack, fuel leak
- Cylinder: compression leak
- Injector: clogged or stays open

## INSPECTION PROCEDURE: P0263, P0266, P0269, P0272, P0275 and P0278

| 1 | Check the DTC detected 1 (Engine ECU) [HINO DX II ] |
|---|---|

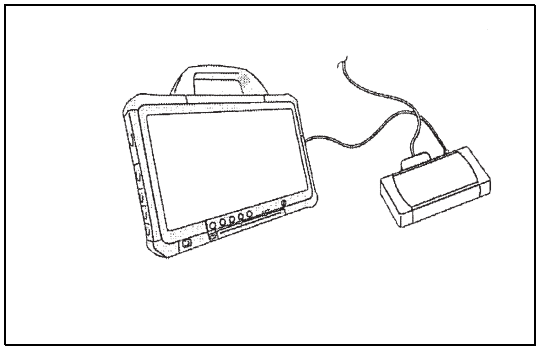

SAPH16F010300327

1. Perform the engine warm-up. (engine coolant temperature: 80 °C {176 °F} or more)
2. Stop the engine and set the starter switch to the "LOCK" position.
3. Connect the vehicle to HINO DX II .
4. Set the starter switch to the "ON" position.
5. Select [Engine] and check if any following DTCs (cylinder #1: P0263, #2: P0266, #3: P0269, #4: P0272, #5: P0275 and #6: P0278) have been detected as "Present" DTC".

**Have any DTCs (cylinder #1: P0263, #2: P0266, #3: P0269, #4: P0272, #5: P0275 and #6: P0278) been detected as an "Active"?**

**YES**

**Go to step 2 (Detected as "Present" DTC.)**

**NO**

**Go to step 9. (Recorded as "Past" DTC.)**

| 2 | Check the DTC detected 2 (Engine ECU) [HINO DX II ] |
|---|---|

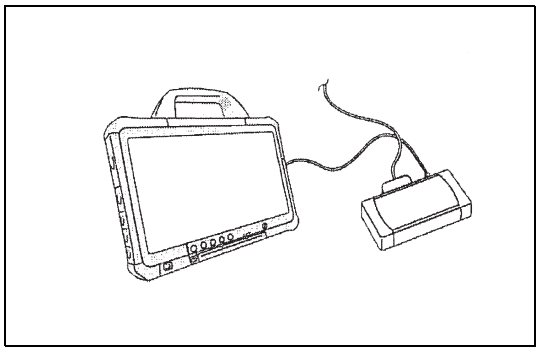

SAPH16F010300328

1. Check if the following DTC are not detected at the same time in the results of step 1.

- P0263, P0266, P0269, P0272, P0275 and P0278

**Has other "Present" DTC been detected?**

**YES**

**Go to diagnosis procedure of the related DTC.**

**NO**

**Go to step 3.**

| 3 | Inspect the fuel line |
|---|---|

1. Check that the fuel line has no leaks or clogging.

**<Main inspection locations>**

- Entry of foreign matter into the fuel tank
- Fuel hose breakage, collapsing, looseness
- High-pressure pipe breakage, collapsing, looseness

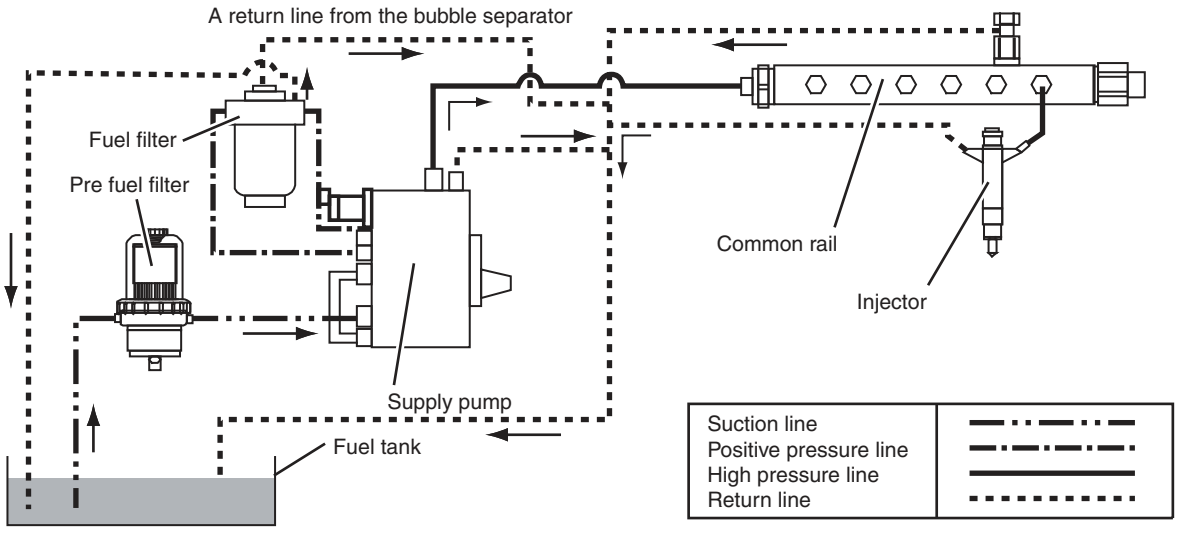


SAPH16F010300329

**Was any failure found?**

**YES**

**Repair or replace the faulty part.**
**Go to step 4 after repair or replacement.**

**NO**

**Go to step 4.**

| 4 | Inspect the pre fuel filter |
|---|---|

1. Check that the pre fuel filter is not dirty or clogged.

**Was any failure found?**

**YES**

**Replace the pre fuel filter.**
**Go to step 5 after replacement.**

**NO**

**Go to step 5.**

| 5 | Check the DTC detected 3 (Engine ECU) [HINO DX II ] |
|---|---|

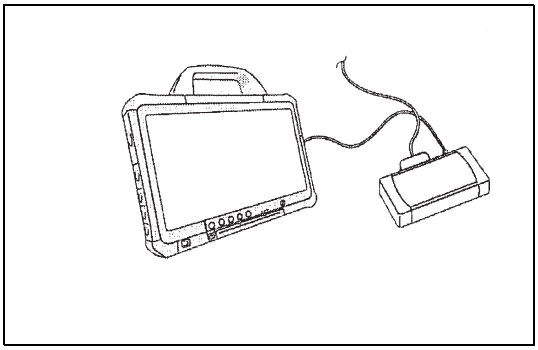

SAPH16F010300330

1. Perform an engine warm-up. (engine coolant temperature: 80 °C {176 °F} or more)
2. Stop the engine.
3. Set the starter switch to the "ON" position.
4. Select [Engine] and check if any followings DTCs (cylinder #1: P0263, #2: P0266, #3: P0269, #4: P0272, #5: P0275 and #6: P0278) have been detected.

**Have any DTCs (cylinder #1: P0263, #2: P0266, #3: P0269, #4: P0272, #5: P0275 and #6: P0278) been detected?**

**YES**

**Go to step 6.**

**NO**

**Procedure completed.**
**Perform "After-inspection work" of INFORMATION section.**

| 6 | Perform the cylinder cut-off test [HINO DX II ] |
|---|---|

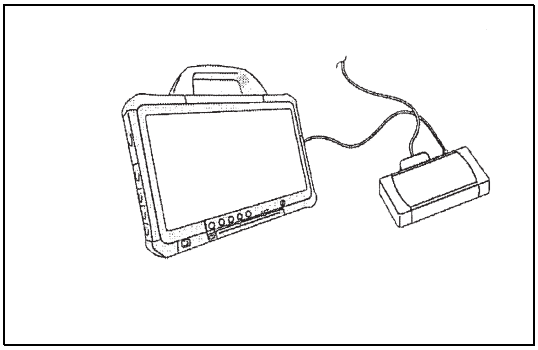

SAPH16F010300331

1. Use the cruise function to run the engine at 1,500 r/min.
2. Check the engine sound during normal operation. (before Cut-off test)
3. Use HINO DX II 's [Active test Setting] to perform a cut-off test. (For details, refer to the cut-off test procedure on the following pages.)

**<Cylinder cut-off test>**

- This method is generally used to check combustion abnormalities by stopping the fuel injection for one of the cylinder of a six-cylinder engine and verifying the engine sound or performance.

**Did you find the engine sound different?**

**YES**

**<There is a clear difference in sound or performance when the injection is cut-off>**
**Go to step 7.**

**NO**

**<There is no difference in sound or performance when the injection is cut-off>**
**Go to step 8.**

| 7 | Check the DTC detected 4 (Engine ECU) [HINO DX II ] |
|---|---|

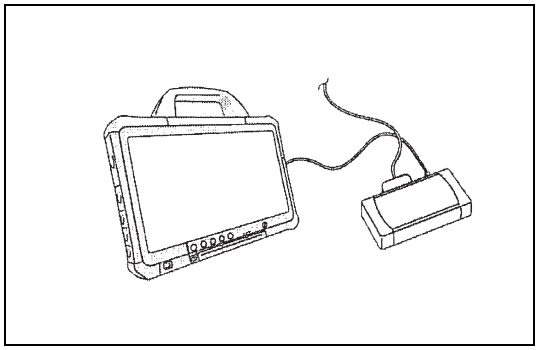

SAPH16F010300332

1. Perform engine warm-up. (engine coolant temperature: 80 °C {176 °F} or more)
2. Stop the engine.
3. Set the starter switch to the "ON" position.
4. Select [Engine] and check if any followings DTCs (cylinder #1: P0263, #2: P0266, #3: P0269, #4: P0272, #5: P0275 and #6: P0278) have been detected.

**Have any DTCs (cylinder #1: P0263, #2: P0266, #3: P0269, #4: P0272, #5: P0275 and #6: P0278) been detected?**

**YES**

**Go to step 8.**

**NO**

**Procedure completed.**
**Perform "After-inspection work" of INFORMATION section.**

| 8 | Replace the common rail assembly [HINO DX II ] |
|---|---|

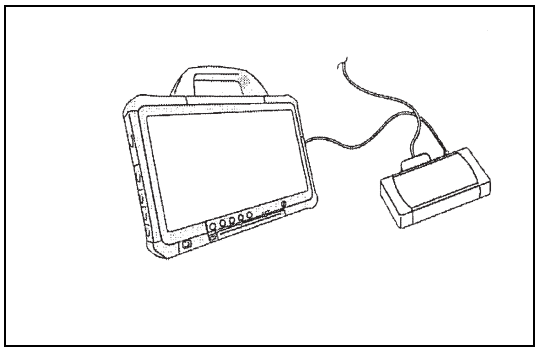

SAPH16F010300333

1. Set the starter switch to the "LOCK" position.
2. Replace common rail assembly.
3. Perform the engine warm-up. (engine coolant temperature: 80 °C {176 °F} or more)
4. Stop the engine.
5. Set the starter switch to the "ON" position.
6. Select [Engine] and check if any followings DTCs (cylinder #1: P0263, #2: P0266, #3: P0269, #4: P0272, #5: P0275 and #6: P0278) have been detected.

**Have any DTCs (cylinder #1: P0263, #2: P0266, #3: P0269, #4: P0272, #5: P0275 and #6: P0278) been detected?**

**YES**

**Go to step 9.**

**NO**

**Procedure completed.**
**Perform "After-inspection work" of INFORMATION section.**

| 9 | Check the injector clamp |
|---|---|

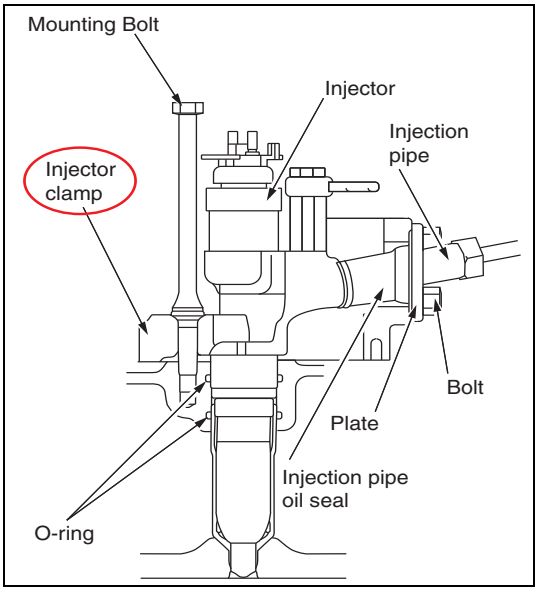


SAPH16F010300334

1. Check that the injector clamp is not loose.
2. Check that there is no "insufficient engagement" of the injector clamp claw.

**Was any failure found?**

**YES**

**Repair or replace the faulty parts. Perform "After-inspection work" of INFORMATION section.**

**NO**

**Go to step 10.**

| 10 | Check the valve clearance |
|---|---|

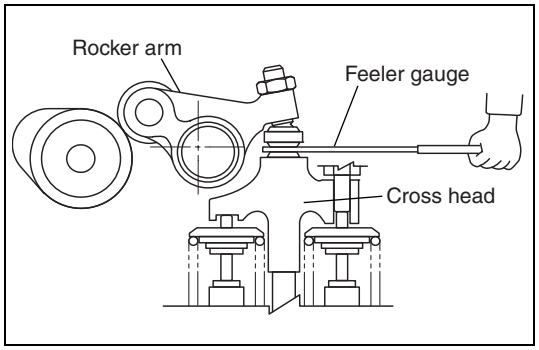


SAPH16F010300335

1. Check that the valve clearance of each cylinder is within the standard values. (Check all the valves.)

| Measurement conditions | Standard values |
|---|---|
| Cold engine | Intake valve: 0.3 mm (0.0118 in.)<br>Exhaust valve: 0.45 mm (0.0177 in.) |

| | Cylinder | | | 1 | | 2 | | 3 | | 4 | | 5 | | 6 | |
|---|---|---|---|---|---|---|---|---|---|---|---|---|---|---|---|
| | Valve | | | IN | EX | IN | EX | IN | EX | IN | EX | IN | EX | IN | EX |
| With No.1 piston at T.D.C. on compression stroke | Camshaft gear condition | 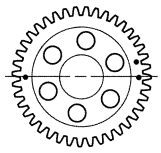 | Two drill holes and camshaft housing is horizontal. The rest of drill hole is visible. #1 | ○ | ○ | | ○ | ○ | | | ○ | ○ | | | |
| With No.6 piston at T.D.C. on compression stroke | | 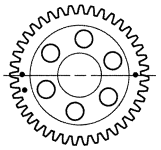 | Two drill holes and camshaft housing is horizontal. The rest of drill hole is invisible. #1 | | | ○ | | | ○ | ○ | | | ○ | ○ | ○ |

**Do the measurements meet the standard value?**

**YES**

**Go to step 11.**

**NO**

**Adjust the valve clearance.**
**Perform "After-inspection work" of INFORMATION section.**

## 11 Check the engine compression pressure

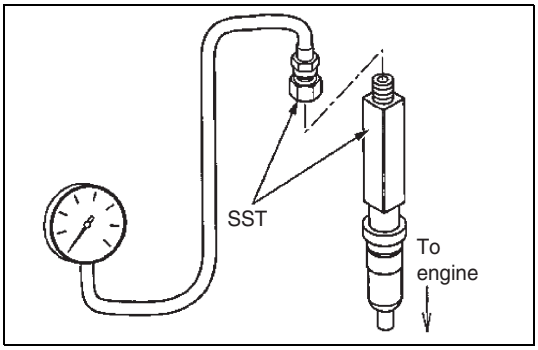


SAPH16F010300338

1. Perform the engine warm-up. (engine coolant temperature: 80 °C {176 °F} or more)
2. Stop the engine.
3. Remove the air cleaner.
4. Remove the all injectors.
5. Set the special service tool (SST) and measure the compression on each cylinder one at a time on all 6 cylinders.

| Measurement conditions | Standard values |
|---|---|
| **Engine revolution: 150 r/min** | **Standard values: 3.2-3.4 MPa {33-35 kgf/cm$^2$} Limit: 2.3 MPa {24 kgf/cm$^2$}** |

**Do the measurements meet the standard value?**

**YES**

**Go to step 12.**

**NO**

**Repair base engine to correct low compression.**
**Perform "After-inspection work" of INFORMATION section.**

## 12 Inspect the engine speed main sensor (Crankshaft position sensor)

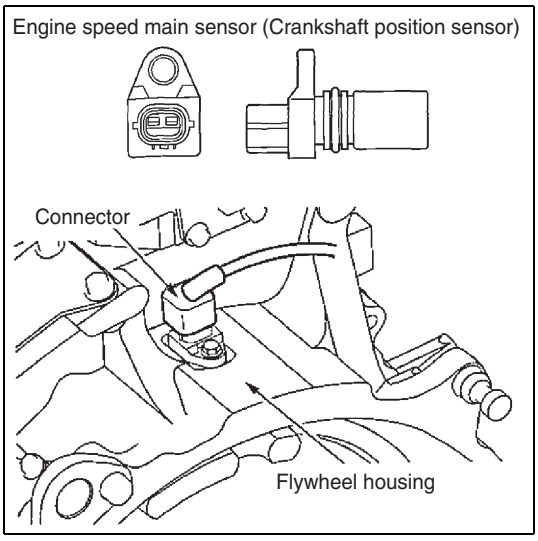


SAPH16F010300339

1. Inspect the condition of engine speed main sensor (crankshaft position sensor) connector (looseness or poor contact).
2. Check the installation of the engine speed main sensor. (Crankshaft position sensor)

**Was any failure found?**

YES

**Repair or replace the faulty parts.**
**Perform "After-inspection work" of INFORMATION section.**

NO

**Go to step 13.**

| 13 | Check the DTC detected 5 (Engine ECU) [HINO DX ll ] |
|---|---|

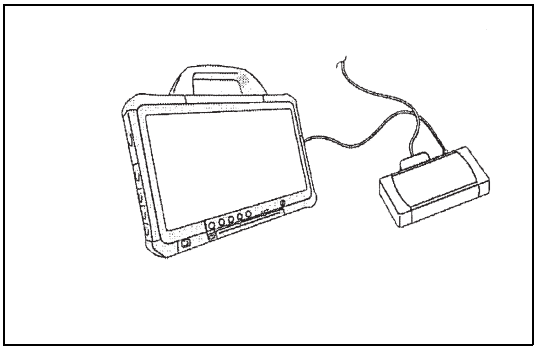

SAPH16F010300340

1. Perform an engine warm-up. (engine coolant temperature: 80 °C {176 °F} or more)
2. Stop the engine.
3. Set the starter switch to the "ON" position.
4. Select [Engine] and check if any followings DTCs (cylinder #1: P0263, #2: P0266, #3: P0269, #4: P0272, #5: P0275 and #6: P0278) have been detected.

**Have any DTCs (cylinder #1: P0263, #2: P0266, #3: P0269, #4: P0272, #5: P0275 and #6: P0278) been detected?**

YES

**Inspect the crankshaft, connecting rods, flywheel, and other parts of the drive system.**
**Perform "After-inspection work" of INFORMATION section.**

NO

**Procedure completed.**
**Perform "After-inspection work" of INFORMATION section.**

# DTC: P026C and P026D

EN01H16F01030F03001059

## P026C: All injector (#1 - #6) Injection quantity and timing
## P026D: All injector (#1 - #6) Injection quantity and timing

INFORMATION

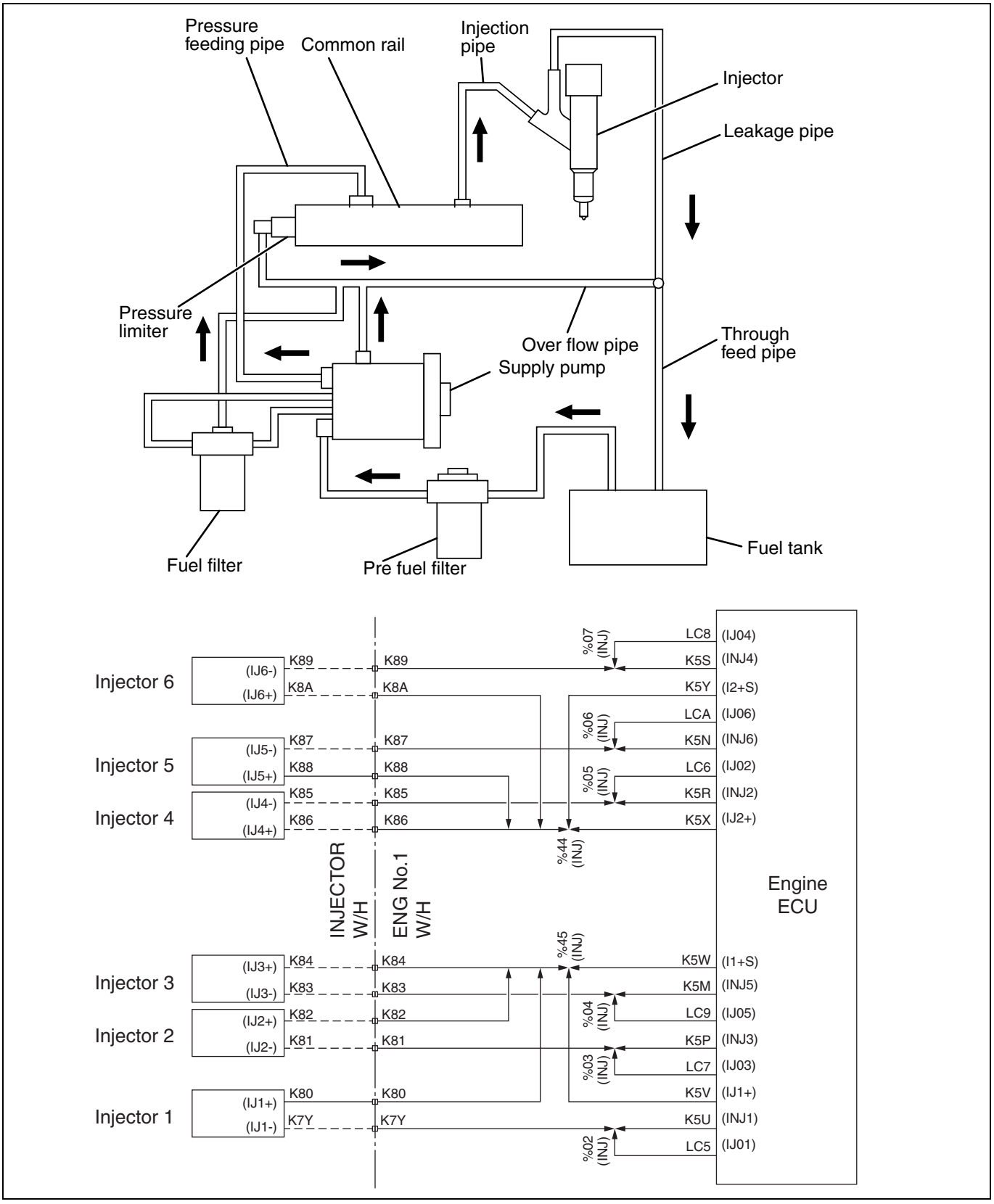


SAPH16F010300341

**1. Technical description**

- The engine speed main sensor (crankshaft position sensor) monitors the engine speed of #1 – #6 cylinders.
- The average injection quantity into #1 – #6 cylinders is increased and decreased so that the engine speed of each cylinder is kept constant.

**<Description of malfunction>**

- Abnormal average injection quantity into #1 – #6 cylinders is detected.

**2. DTC set condition**

(1) DTC detection condition

1. The #1 – #6 injection quantity and timing diagnosis is detecting normally.
2. All the following conditions continue for at least 10 seconds.
   - Engine speed is in the range of 725 - 775 r/min.
   - Gear position is in D range.
   - Fuel injection quantity < 30 $mm^3$/st. cyl.
   - Engine coolant temperature ≥ 60 °C {140 °F}.
   - Throttle opening is 0 %.
   - Vehicle speed is 0 mph.
   - Barometric pressure ≥ 75 kPa {10.8 psi}.
   - Exhaust brake and PTO are not in operation.
   - No other DTC is detected. (System normal)
3. Failure is determined when the average injection quantity into #1 – #6 cylinders measured by the engine speed main sensor (crankshaft position sensor) is faulty for at least 20 seconds.

(2) Judgment criteria

- Twenty seconds has elapsed since conditions exceeded the injection quantity threshold value that exceeds the exhaust gas. (Threshold value varies depending on engine load and T/M.)

**3. Reset condition**

- After normal operation is restored and the starter switch is on the "LOCK" position.

**4. Indication, warning or system control regulation when the DTC is set.**

- MIL: ON
- SVS light: OFF

**5. Symptoms on the vehicle when the DTC is set**

**<Symptoms on the vehicle due to backup control (fail safe function)>**

- –

**<Symptoms on the vehicle due to malfunction>**

- Large vibration during idling.

**6. Pre-inspection work**

- Check that the battery voltage is in the normal range.

**7. After-inspection work**

- Clear all past DTCs.
- Check that no DTC is detected after test drive.

**8. Estimated failure factors**

- Fuel injection line: break, crack, fuel leak
- Cylinder: compression leak
- Injector: clogging, constantly injecting
- Use of low-grade fuel
- Crankshaft position sensor phase shifting.

## INSPECTION PROCEDURE: P026C and P026D

| 1 | Check the DTC detected 1 (Engine ECU) [HINO DX II ] |
|---|---|

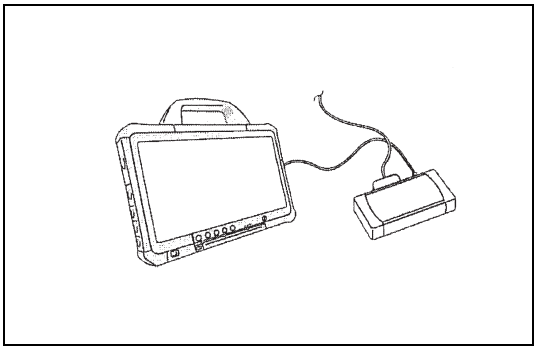

SAPH16F010300342

1. Perform the engine warm-up. (engine coolant temperature: 80 °C {176 °F} or more)
2. Stop the engine and set the starter switch to the "LOCK" position.
3. Connect the vehicle to HINO DX II .
4. Set the starter switch to the "ON" position.
5. Select [Engine] and check if the DTC (P026C or P026D) has been detected as "Present" DTC.

**Has DTC (P026C or P026D) been detected as "Present" DTC?**

**YES**

**Go to step 2 (Detected as "Present" DTC)**

**NO**

**Go to step 9. (Recorded as "Past" DTC)**

| 2 | Check the DTC detected 2 (Engine ECU) [HINO DX II ] |
|---|---|

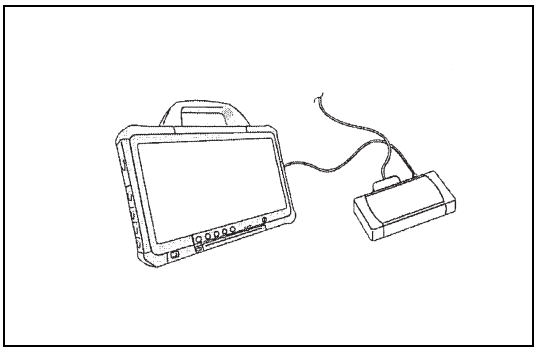

SAPH16F010300343

1. Check if the following DTC are not detected at the same time in the results of step 1.

- P0263, P0266, P0269, P0272, P0275 and P0278

**Has other "Active" DTC been detected?**

**YES**

**Go to diagnosis procedure of the related DTC.**

**NO**

**Go to step 3.**

| 3 | Inspect the fuel line |
|---|---|

1. Check that the fuel line has no leaks or clogging.

**<Main inspection locations>**

- Entry of foreign matter into the fuel tank
- Fuel hose breakage, collapsing, looseness
- High-pressure pipe breakage, collapsing, looseness

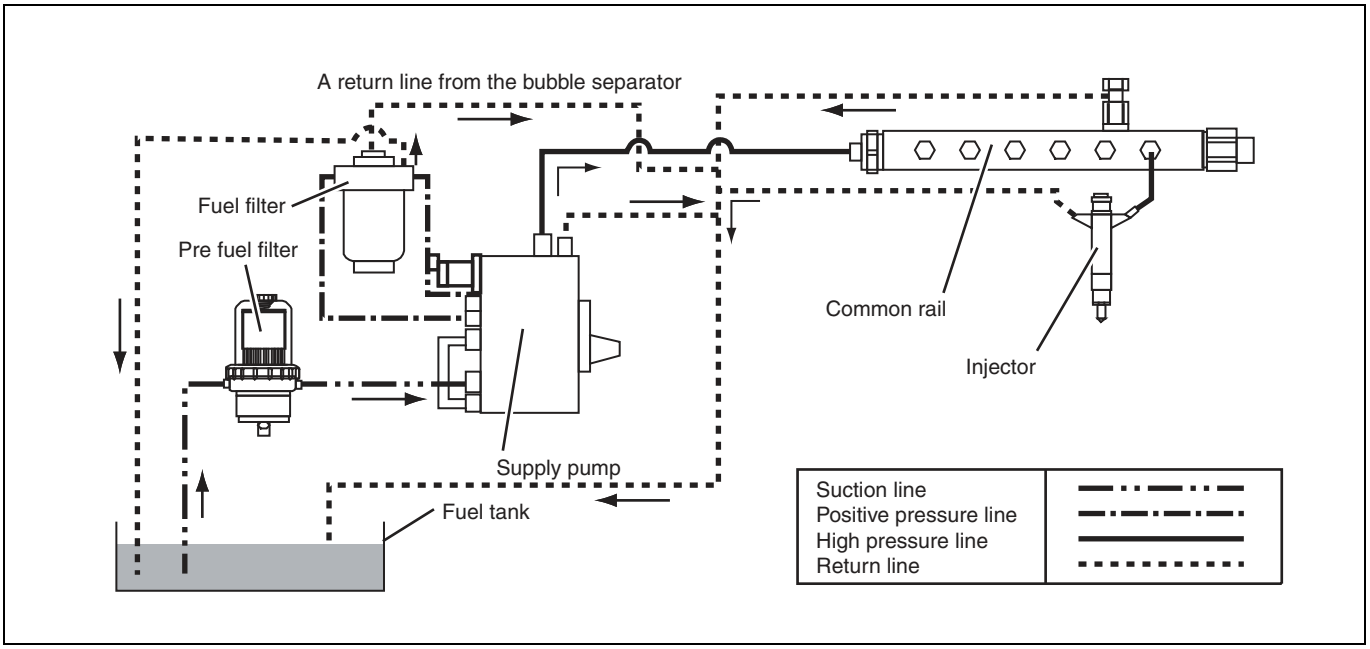


SAPH16F010300344

**Was any failure found?**

**YES**

**Repair or replace the faulty part.**
**Go to step 4 after repair or replacement**

**NO**

**Go to step 4**

| 4 | Inspect the pre fuel filter |
|---|---|

1. Check that the pre fuel filter is not dirty or clogged or damaged.

**Was any failure found?**

**YES**

**Replace the pre fuel filter**
**Go to step 5 after replacement**

**NO**

**Go to step 5**

| 5 | Check the DTC detected (Engine ECU) [HINO DX II ] |
|---|---|

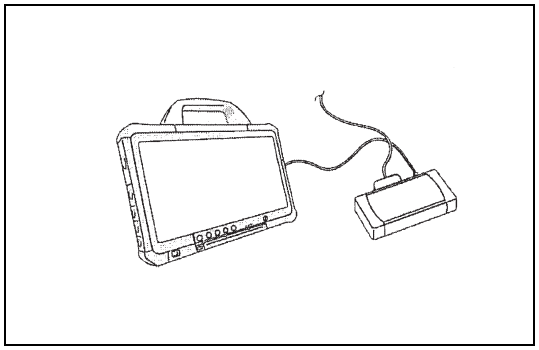

SAPH16F010300345

1. Perform the engine warm-up. (engine coolant temperature: 80 °C {176 °F} or more)
2. Stop the engine.
3. Set the starter switch to the "ON" position.
4. Select [Engine] and check if the DTC (P026C or P026D) has been detected.

**Has DTC (P026C or P026D) been detected?**

**YES**

**Go to step 6.**

**NO**

**Procedure completed.**
**Perform "After-inspection work" of INFORMATION section.**

| 6 | Perform the cylinder cut-off test [HINO DX II ] |
|---|---|

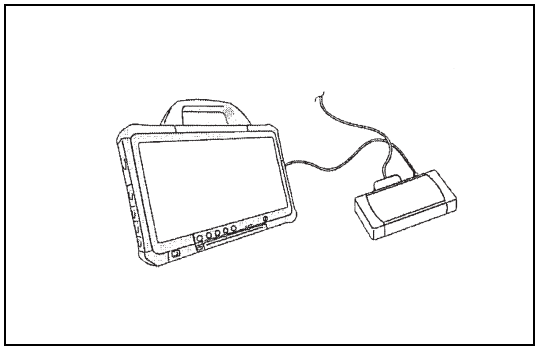

SAPH16F010300346

1. Use the cruise function to run the engine at 1,500 r/min.
2. Check the engine sound during normal operation. (before Cut-off test)
3. Use HINO DX II 's [Active test Setting] to perform a cut-off test. (For details, refer to the cut-off test procedure on the following pages.)

**<Cylinder cut-off test>**

- This method is generally used to check combustion abnormalities by stopping the fuel injection for one of the cylinder of a six-cylinder engine and verifying the engine sound or performance.

**Did you find the engine sound different?**

**YES**

**<There is a clear difference in sound or performance when the injection is cut-off>**
**Go to step 8.**

**NO**

**<There is no difference in sound or performance when the injection is cut-off>**
**Replace the injector.**
**Replace the injector. (Replace the failed injector detected by the cut-off test, not the injector noted in the DTC.)**
**Go to step 7 after replacement.**

| 7 | Check the DTC detected (Engine ECU) [HINO DX II ] |
|---|---|

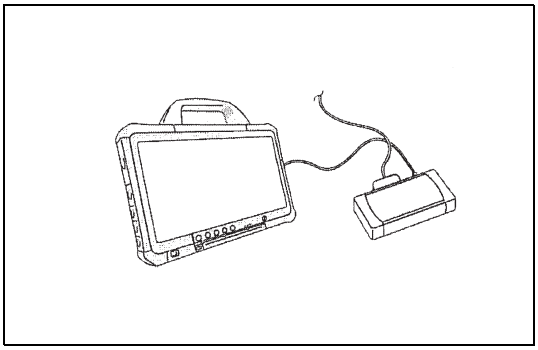

SAPH16F010300347

1. Perform the engine warm-up. (engine coolant temperature: 80 °C {176 °F} or more)
2. Stop the engine.
3. Set the starter switch to the "ON" position.
4. Select [Engine] and check if the DTC (P026C or P026D) has been detected.

**Has DTC (P026C or P026D) been detected?**

**YES**

**Go to step 8.**

**NO**

**Procedure completed.**
**Perform "After-inspection work" of INFORMATION section.**

| 8 | Replace the common rail assembly [HINO DX II ] |
|---|---|

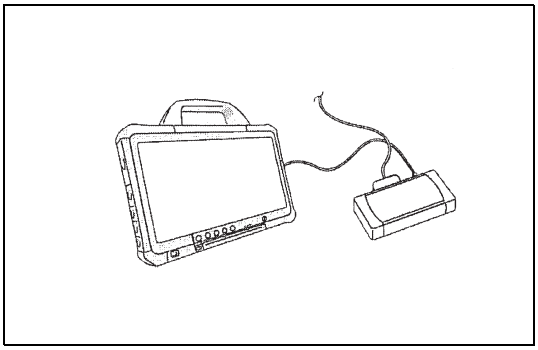

SAPH16F010300348

1. Set the starter switch to the "LOCK" position.
2. Replace common rail assembly.
3. Perform the engine warm-up. (engine coolant temperature: 80 °C {176 °F} or more)
4. Stop the engine.
5. Set the starter switch to the "ON" position.
6. Select [Engine] and check if the DTC (P026C or P026D) has been detected.

**Has DTC (P026C or P026D) been detected?**

**YES**

**Go to step 9.**

**NO**

**Procedure completed.**
**Perform "After-inspection work" of INFORMATION section.**

| 9 | Check the injector clamp |
|---|---|

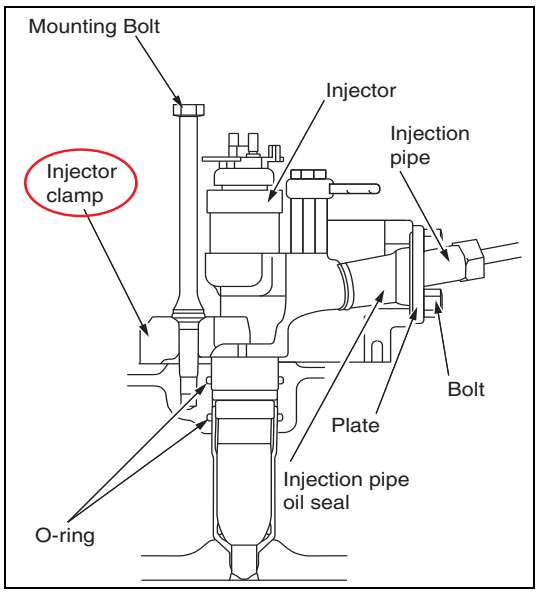


SAPH16F010300349

1. Check that the injector clamp is not loose.
2. Check that there is no "insufficient engagement" of the injector clamp claw.

**Was any failure found?**

**YES**

**Repair or replace the faulty parts. Perform "After-inspection work" of INFORMATION section.**

**NO**

**Go to step 10.**

| 10 | Check the valve clearance |
|---|---|

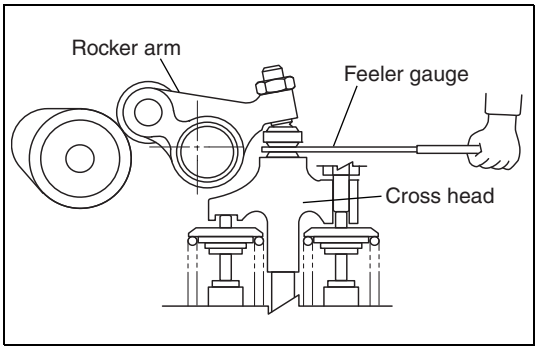


SAPH16F010300350

1. Check that the valve clearance of each cylinder is within the standard values. (Check all the valves.)

| Measurement conditions | Standard values |
|---|---|
| Cold engine | Intake valve: 0.3 mm (0.0118 in.)<br>Exhaust valve: 0.45 mm (0.0177 in.) |

| | Cylinder | | | 1 | | 2 | | 3 | | 4 | | 5 | | 6 | |
|---|---|---|---|---|---|---|---|---|---|---|---|---|---|---|---|
| | Valve | | | IN | EX | IN | EX | IN | EX | IN | EX | IN | EX | IN | EX |
| With No.1 piston at T.D.C. on compression stroke | Camshaft gear condition | 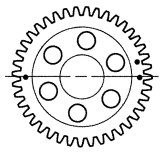 | Two drill holes and camshaft housing is horizontal. The rest of drill hole is visible. #1 | ○ | ○ | | ○ | ○ | | | ○ | ○ | | | |
| With No.6 piston at T.D.C. on compression stroke | | 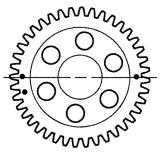 | Two drill holes and camshaft housing is horizontal. The rest of drill hole is invisible. #1 | | | ○ | | | ○ | ○ | | | ○ | ○ | ○ |

**Do the measurements meet the standard value?**

**YES**

**Go to step 11.**

**NO**

**Adjust the valve clearance.**
**Perform "After-inspection work" of INFORMATION section.**

| 11 | Check the engine compression pressure |
|---|---|

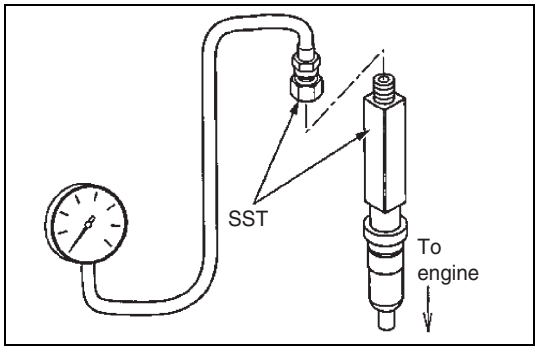

SAPH16F010300353

1. Perform an engine warm-up. (engine coolant temperature: 80 °C {176 °F} or more)
2. Stop the engine.
3. Remove the air cleaner.
4. Remove the all injectors.
5. Set the special service tool (SST) and measure the compression.

| Measurement conditions | Standard values |
|---|---|
| **Engine revolution: 150 r/min** | **Standard values: 3.2-3.4 MPa {33-35 kgf/cm$^2$} Limit: 2.3 MPa {24 kgf/cm$^2$}** |

**Do the measurements meet the standard value?**

**YES**

**Go to step 12.**

**NO**

**Engine overhaul.**
**Perform "After-inspection work" of INFORMATION section.**

| 12 | Inspect the engine speed main sensor (Crankshaft position sensor) |
|---|---|

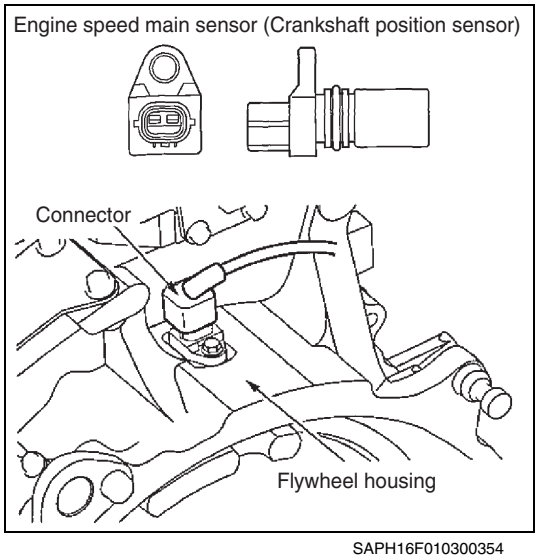

SAPH16F010300354

1. Inspect the condition of engine speed main sensor (crankshaft position sensor) connector (looseness or poor contact).
2. Check the installation of the engine speed main sensor. (Crankshaft position sensor)

**Was any failure found?**

YES

**Repair or replace the faulty parts.**
**Perform "After-inspection work" of INFORMATION section.**

NO

**Go to step 13.**

| 13 | Check the DTC detected (Engine ECU) [HINO DX ll ] |
|---|---|

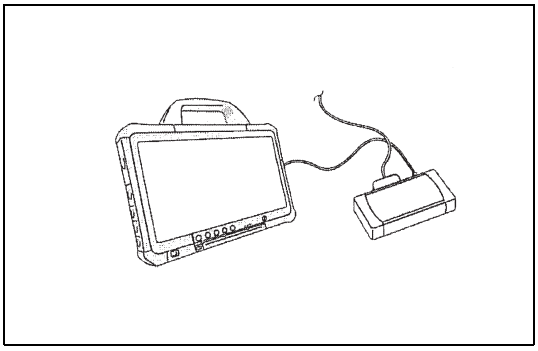

SAPH16F010300355

1. Perform an engine warm-up. (engine coolant temperature: 80 °C {176 °F} or more)
2. Stop the engine
3. Set the starter switch to the "ON" position.
4. Select [Engine] and check if the DTC (P026C or P026D) has been detected.

**Has DTC (P026C or P026D) been detected?**

YES

**Inspect the crankshaft, connecting rods, flywheel, and other parts of the drive system.**
**Perform "After-inspection work" of INFORMATION section.**

NO

**Procedure completed.**
**Perform "After-inspection work" of INFORMATION section.**

## Cylinder cut-off test

**<Cylinder cut-off test>**
By stopping fuel injection for one of the cylinders of an engine normally running with six, this test detects combustion abnormalities of each cylinder.

**<Purpose>**
Evaluation of combustion abnormalities in the cylinders by using sound differences.

**<Know-how & examples>**
Detect combustion abnormalities of any cylinder from differences in the sound and perform the required corrections.

| 1 | Cylinder cut-off test |
|---|---|

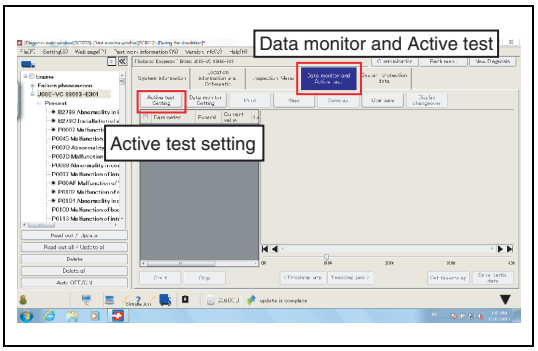


SAPH16F010300356

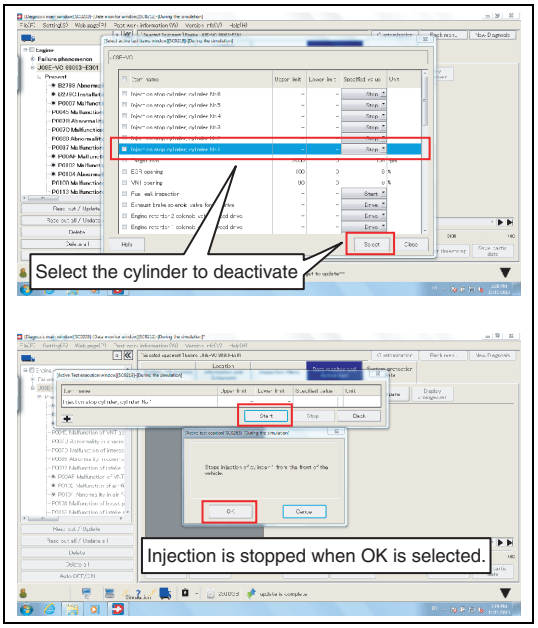


SAPH16F010300357

1. Start the engine and use the cruise control function to run the engine at 1,500 r/min.
2. Check that the engine sound at the time of before cut-off test normal operation. (The sound at this time shall be α.)
3. Select [Active test Setting] in the [Data monitor and Active test] menu on HINO DX II .
4. Stop injection for cylinder No. 1 and check the engine sound. (The sound at this time shall be A.) Stop the test after checking.

**HINT**
**During the test, the engine tries to maintain the original six-cylinder speed, but using only five cylinders, so that the sound A becomes larger in comparison with the sound α. (This is not abnormal.)**
**As the engine is running with combustion of one cylinder less than normal, it is normal that the vibrations increase.**
**For an engine with no injection or reduced injection quantity, injection stop causes no vibration change.**
**For engines increasing the injection quantity for some cylinders, the vibrations become larger when all cylinders are operating, and the vibrations decrease when injection is stopped for the defective cylinder.**

5. Sequentially stop the injection for cylinders No. 2, No. 3, No. 4, No. 5, and No. 6 in the same way as for a cylinder No. 1. (The measure sounds shall be B, C, D, E, and F respectively.)

**HINT**
- **When the difference in the sound is difficult to detect, repeat steps 4 and 5.**
- **if one of the sounds A to F is the same as α, always check for a communication problem of the injector.**

| Did you find the engine sound different? |
|---|

**YES**

**(One out of A to F is abnormally loud or the same as α)**
**Replace the injector**
**Perform "After-inspection work" of INFORMATION section.**

**NO**

**Comparison of the sounds A to F shows no clear difference**
**Go to next step of diagnosis flow chart.**

# DTC: P0299

EN01H16F01030F03001060

## P0299: Underboost

INFORMATION

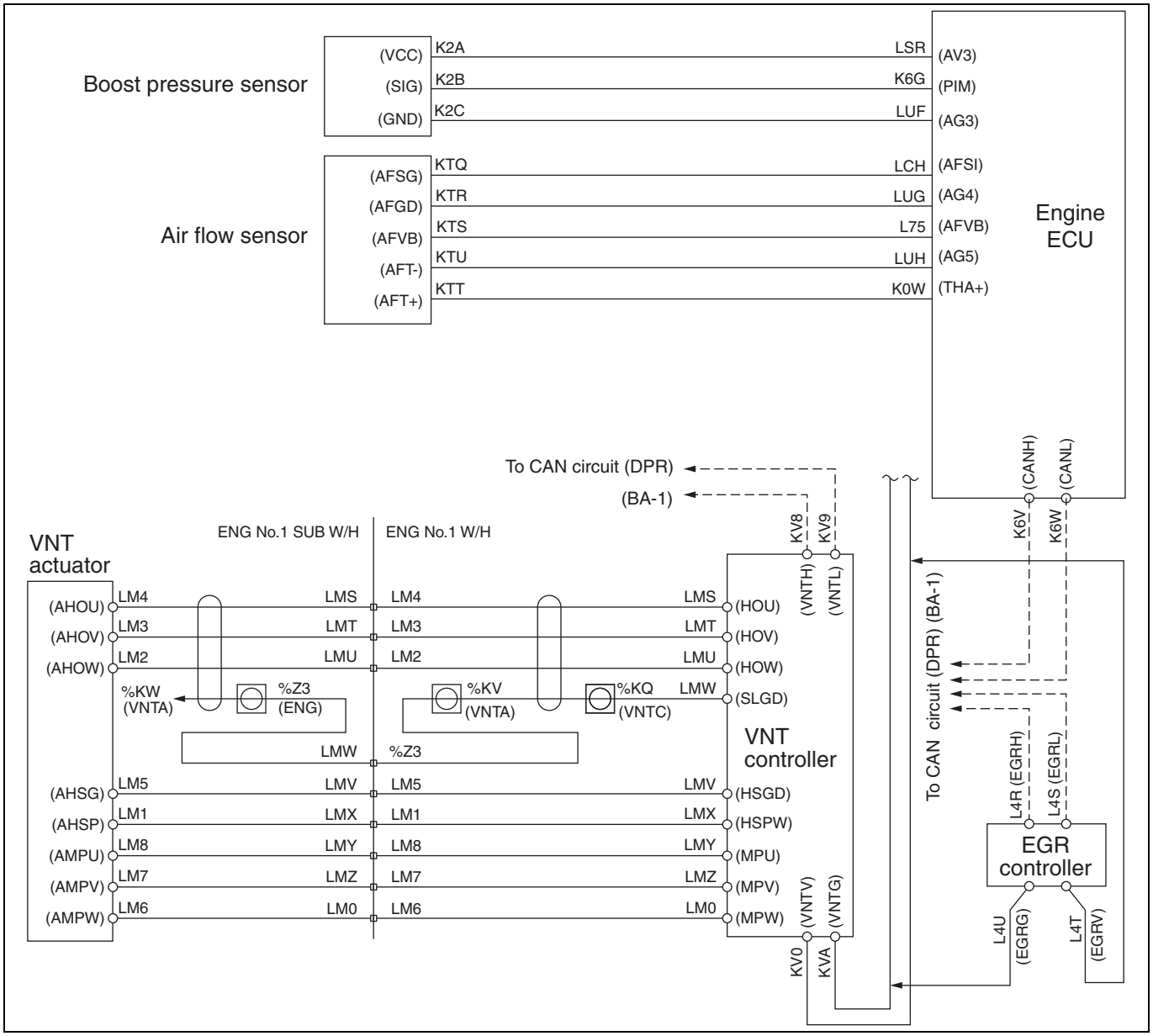


SAPH16F010300358

### 1. Technical description

- The VNT moves the nozzle vane steplessly by the REA (Rotary Electric Actuator) to control the turbo speed and boost pressure. It compares the target boost pressure and actual boost pressure to check if the actual pressure is lower than the target pressure.

**<Description of malfunction>**

- The boost pressure is lower than the stipulated value.

**2. DTC set condition**

(1) Check conditions

- While the engine is in operation - Always
  (Detection is available after 10 minutes of engine start.)

(2) Judgment criteria

- Compare the target boost pressure and actual boost pressure.: 45 - 65 kPa {6.5 - 9.4 psi}

**3. Reset condition**

- After normal operation is restored and the starter switch is turned OFF.

**4. Indication, warning or system control regulation when the DTC is set.**

- MIL: ON
- SVS light: OFF

**5. Symptoms on the vehicle when the DTC is set**

**<Symptoms on the vehicle due to backup control (fail safe function)>**

- –

**<Symptoms on the vehicle due to malfunction>**

- Engine lack of power due to lack of air intake volume.
- Turbocharger abnormal noise/damage.
- Lack of power or engine stall due to DPR filter clogged (excessive soot generation).

**6. Pre-inspection work**

- Check that the battery voltage is in the normal range.

**7. After-inspection work**

- Clear all past DTCs.
- Check that no DTC is stored after test drive.

**8. Estimated failure factors**

- Abnormality in air intake system (disconnected boost hose)
- Turbocharger failure (stuck turbine)
- Malfunction of boost pressure sensor
- Malfunction of air flow sensor
- Malfunction of VNT
- Malfunction of EGR valve

## INSPECTION PROCEDURE: P0299

| 1 | Check the DTC detected (Engine ECU) [HINO DX II ] |
|---|---|

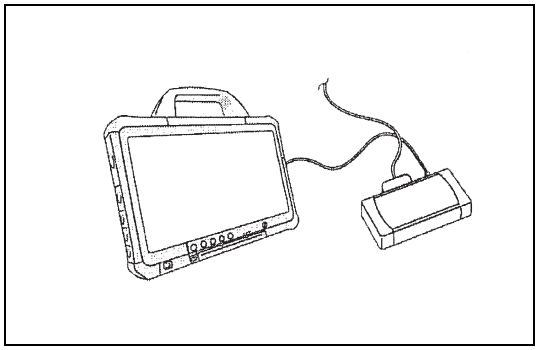

SAPH16F010300359

1. Set the starter switch to the "LOCK" position.
2. Connect the vehicle to HINO DX II .
3. Set the starter switch to the "ON" position.
4. Select [Engine] and check if any DTC other than P0299 (for example, P0045, P0401) has been detected.

**Has a DTC other than P0299 been detected?**

**YES**

**Go to the diagnostic procedure of a related DTC.**

**NO**

**Go to step 2.**

| 2 | Inspect the boost pressure sensor hose. |
|---|---|

1. Make sure the boost pressure sensor hose is not clogged, ruptured, or cracked.
2. Make sure the pipe on the intake manifold side is not clogged.

**Was any failure found?**

**YES**

**1. Replace the boost pressure sensor hose.**
**2. Clean the intake manifold pipe.**
**Perform "After-inspection work" of INFORMATION section.**

**NO**

**Go to step 3.**

## 3 Inspect the boost pressure sensor power supply system

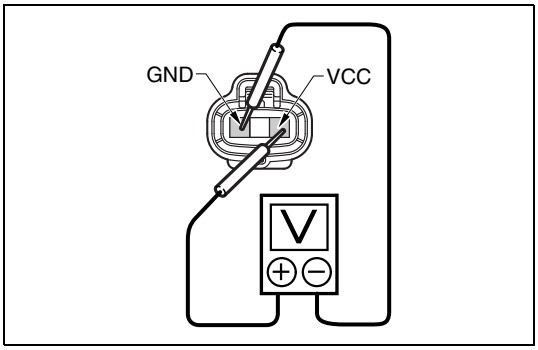


SAPH16F010300360

1. Set the starter switch to the "LOCK" position.
2. Disconnect the boost pressure sensor connector.
3. Set the starter switch to the "ON" position.
4. Use the electrical tester to measure the voltage between the terminals of the boost pressure sensor vehicle-side connector.

| Measurement conditions | Tester connections | Standard values |
|---|---|---|
| Starter switch: ON | Boost pressure sensor vehicle-side connector VCC – GND | 4.75 – 5.25 V |

**Do the measurements meet the standard value?**

**YES**

**Go to step 4.**

**NO**

**Inspect the harness and engine ECU. Perform "After-inspection work" of INFORMATION section.**

## 4 Inspect the response delay of the VNT controller [HINO DX II ]

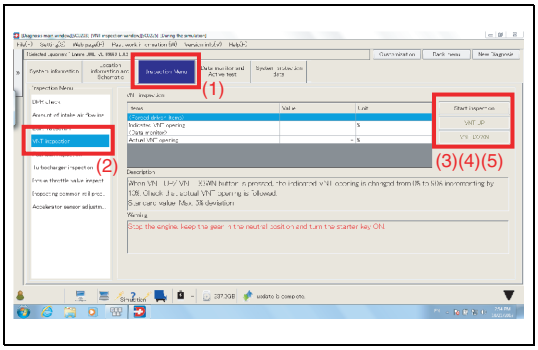


SAPH16F010300361

1. Select [Inspection Menu] from the menu, then inspect the response delay at the Target VNT position and Actual VNT position.

**⚠ CAUTION**
**Perform the inspection while the engine is stopped to avoid damages.**

<Inspection procedure>
(1) Select [Inspection Menu].
(2) Select [VNT inspection].
(3) Click [Start inspection].
(4) Select [VNT UP]:
• Inspect the response delay at each step of the Target VNT position and Actual VNT position from 0 to 90 %.
(5) Select [VNT DOWN]:
• Inspect the response delay at each step of the Target VNT position and Actual VNT position from 90 to 0 %.

**HINT**
**The VNT opening position changes of around 10 % per step between 0 – 90 %.**

| Standard values |
|---|
| From the Target VNT position to the Actual VNT position, the response delay should be within 3 seconds. |

**Do the measurements meet the standard value?**

| YES | NO |
|---|---|
| **Go to step 5.** | **Replace the turbocharger.<br>Perform "After-inspection work" of INFORMATION section.** |

## 5 Inspect the response delay of the EGR valve [HINO DX II ]

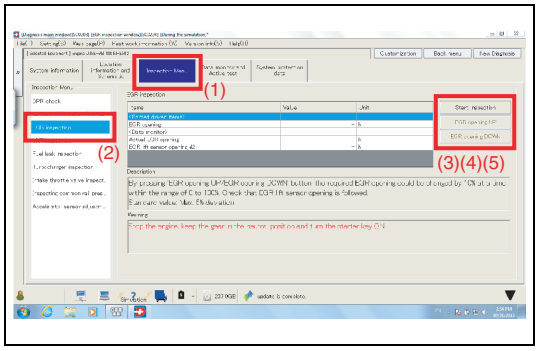


SAPH16F010300362

1. Select [Inspection Menu] and then [EGR inspection] from the menu, then inspect the response delay at the Target EGR position and Actual EGR position.

**⚠ CAUTION**
**Perform the inspection while the engine is stopped to avoid damages.**

(1) Select [Inspection Menu].
(2) Select [EGR inspection].
(3) Click [Start inspection].
(4) Click [EGR opening UP]:
• Inspect the response delay at each step of the Target EGR position and Actual EGR position from 0 to 100 %.
(5) Click [EGR opening DOWN]:
• Inspect the response delay at each step of the Target EGR position and Actual EGR position from 100 to 0 %.

**HINT**
**The EGR opening position changes of around 10 % per step between 0 – 100 %.**

| Standard values |
|---|
| **From the Target EGR position to the Actual EGR position, the response delay should be within 5 seconds.** |

**Do the measurements meet the standard value?**

| YES | NO |
|---|---|
| **Check that P0299 is not detected again to complete the check.<br>Perform "After-inspection work" of INFORMATION section.** | **Replace the EGR valve.<br>Perform "After-inspection work" of INFORMATION section.** |

# DTC: P0300 (J08E-VB)

EN01H16F01030F03001061

## P0300: All injector (#1 - #6) Misfire

INFORMATION

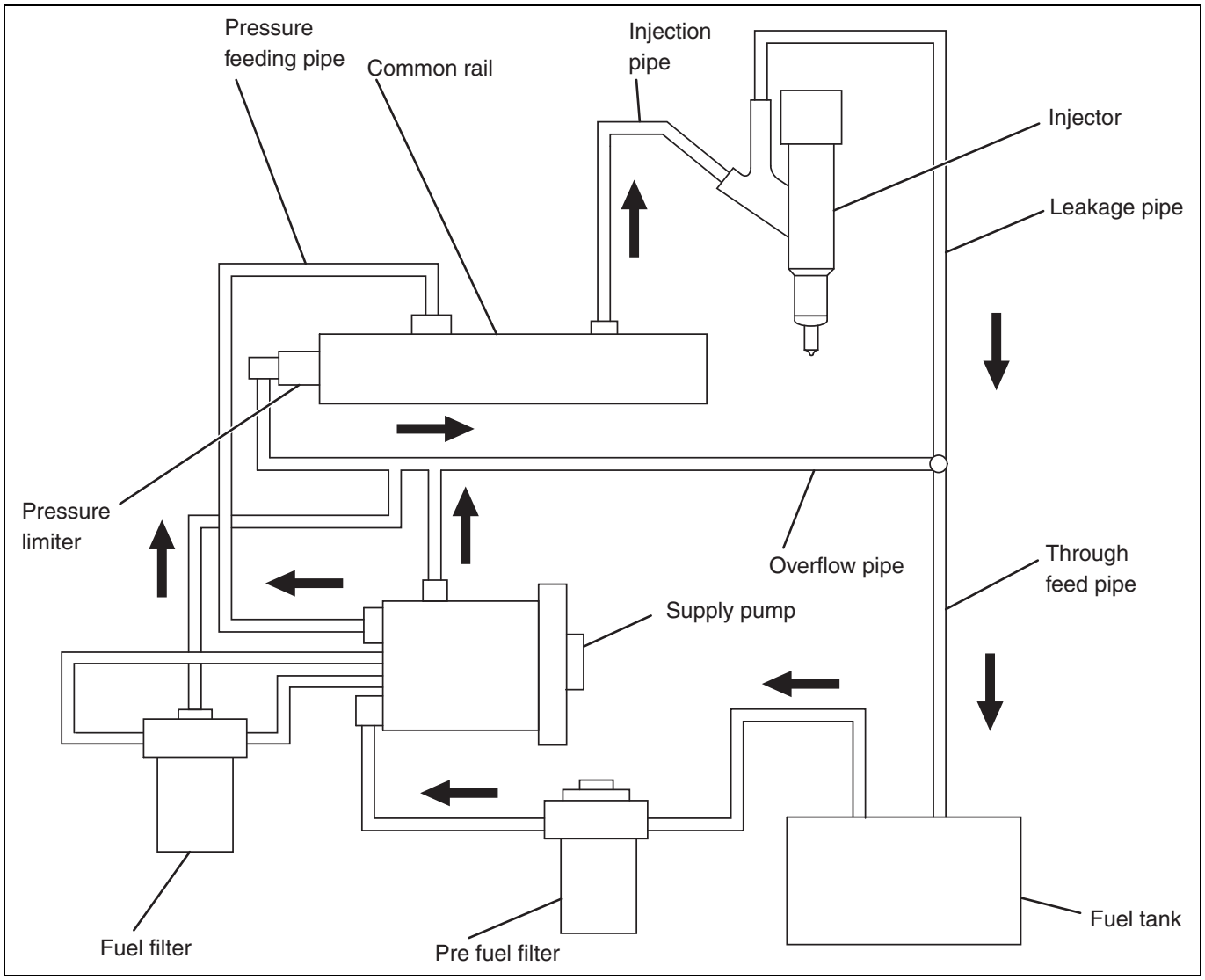


SAPH16F010300363

**1. Technical description**

- The engine main speed sensor (NE sensor) is used to calculate the transit time of the #1 cylinder for every 30° of crank angle.
- The mean value of the angular acceleration for the expansion stroke of each cylinder is calculated at all times, based on the transit time for every 30° of crank angle.
- Flame-out is detected by comparing the angular acceleration of the object cylinder of the crank angle in the expansion stroke and the angular acceleration not being the object.

**<Description of malfunction>**

- When a flame-out rate of 5 % or more for the total of #1 to #6 is detected, it is considered to be an abnormality.
  *A flame-out ratio of 5 % means that an injection was not possible 150 times out of the 3000 injections for 1000 revolutions of the engine.

**2. DTC set condition**

(1) DTC detection condition

1. All the following conditions continue for at least 10 seconds:
   - Engine speed is between 750 – 2,100 r/min.
   - Fuel injection quantity is within 5 – 110 $mm^3$/st. cyl.
   - Exhaust brake and PTO are not in operation.
   - Engine speed range is 500 r/min/sec or less.
   - Engine coolant temperature ≥ 60 °C {140 °F}.
   - Atmospheric pressure is 75 kPa {10.9 psi} or more.

(2) Judgment criteria

- When a flame-out ratio of 5 % or more occurs during 1000 revolutions of the crankshaft, it is considered to be an abnormality.

**3. Reset condition**

- After restoration to normal condition.

**4. Indication, warning or system control regulation when the DTC is set.**

- MIL: ON
- SVS light: OFF

**5. Symptoms on the vehicle when the DTC is set**

**<Symptoms on the vehicle due to backup control (fail safe function)>**

- –

**<Symptoms on the vehicle due to malfunction>**

- Excessive vibration while engine is idling.

**6. Pre-inspection work**

- Check that the battery voltage is in the normal range.
- Check that no malfunction is found by conducting the failure diagnosis system check.

**7. After-inspection work**

- Clear all past DTCs.
- Check that no DTC is stored after test drive.

**8. Estimated failure factors**

- Fuel injection line: break, crack, fuel leak, clogging
- Injector: clogging

## INSPECTION PROCEDURE: P0300

| 1 | Inspect the fuel pipes |
|---|---|

1. Check the fuel pipe (high-pressure pipe between the common rail and injector) and verify that there are no fuel leak, break, crush, or loose connections in it.

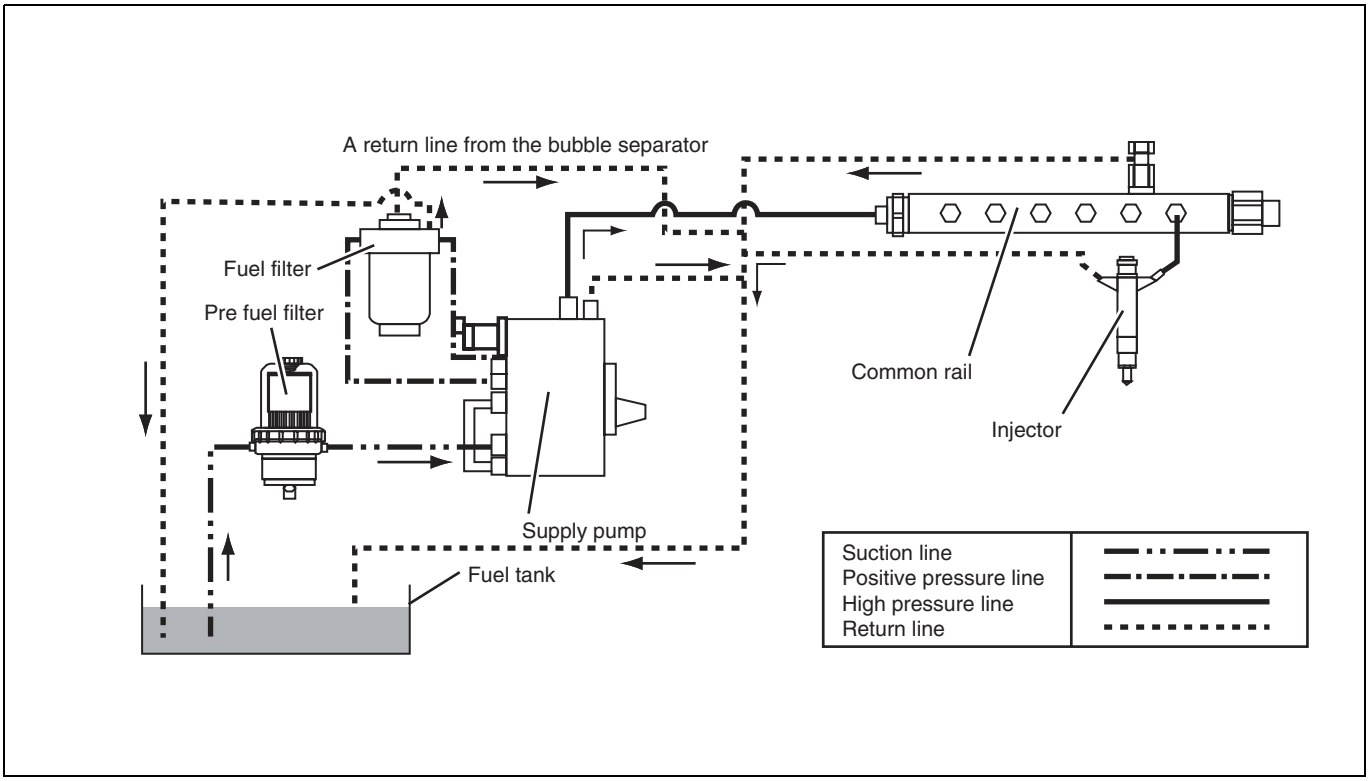


SAPH16F010300364

**Was any failure found?**

**YES**

**Repair or replace the faulty part, go to step 2 after repair or replacement.**

**NO**

**Go to step 3.**

| 2 | Check the DTC detected (Engine ECU) 1 [HINO DX II ] |
|---|---|

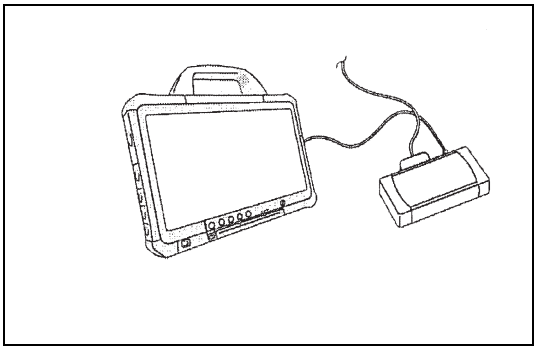

SAPH16F010300365

1. Warm-up the engine. (engine coolant temperature: 60 °C {140 °F} or more)
2. Stop the engine and set the starter switch to the "ON" position.
3. Select [Engine] and check if P0300 has been detected.

**Has DTC P0300 been detected?**

**YES**

**Go to step 3.**

**NO**

**Procedure completed.**
**Perform "After-inspection work" of INFORMATION section.**

| 3 | Perform the cylinder cut-off test [HINO DX II ] |
|---|---|

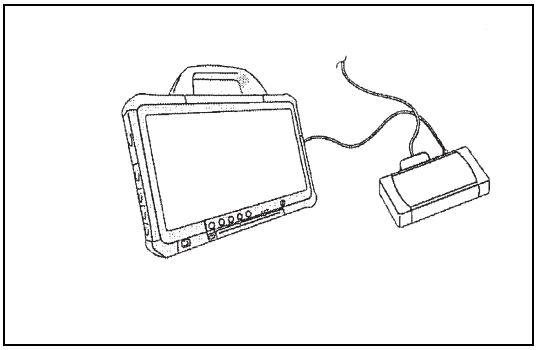

SAPH16F010300366

1. Use the cruise function to run the engine at 1,500 r/min.
2. Check the engine sound during normal operation.
3. Select [Engine], and [Active test Setting] to perform a [cut-off test]. For details, refer to the "Cylinder cut-off test" procedure.

**<Cylinder cut-off test>**

- This method is generally used to check combustion abnormalities by stopping the fuel injection for one of the cylinder of a six-cylinder engine and verifying the injectors' sound.

**Did you notice a difference in engine sound?**

**YES**

**<There is a clear difference in sound or performance when the injection is cut-off>**
**Replace the injector. (Replace the failed injector detected by the cut-off test, not the injector noted in the DTC.)**
**Go to step 4 after replacement.**

**NO**

**<There is no difference in sound or performance when the injection is cut-off>**
**Go to step 5.**

| 4 | Check the DTC detected (Engine ECU) 2 [HINO DX II ] |
|---|---|

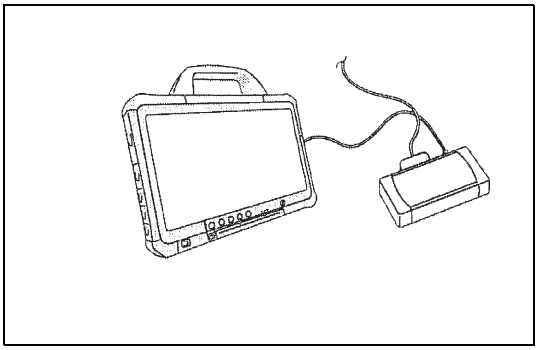

SAPH16F010300367

1. Warm-up the engine. (engine coolant temperature: 60 °C {140 °F} or more)
2. Stop the engine and set the starter switch to the "ON" position.
3. Select [Engine] and check if P0300 has been detected.

**Has DTC P0300 been detected?**

**YES**

**Go to step 5.**

**NO**

**Procedure completed.**
**Perform "After-inspection work" of INFORMATION section.**

| 5 | Replace the common rail assembly [HINO DX II ] |
|---|---|

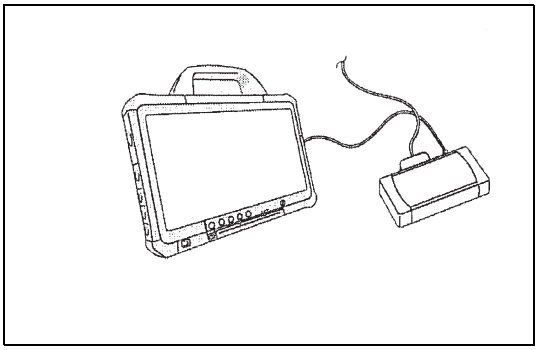

SAPH16F010300368

1. Set the starter switch to the "LOCK" position.
2. Replace the common rail assembly with a new one.
3. Warm-up the engine. (engine coolant temperature: 60 °C {140 °F} or more)
4. Stop the engine and set the starter switch to the "ON" position.
5. Select [Engine] and check if P0300 has been detected.

**Has DTC P0300 been detected?**

**YES**

**Go to step 6.**

**NO**

**Procedure completed.**
**Perform "After-inspection work" of INFORMATION section.**

| 6 | Check the DTC detected (Engine ECU) 3 [HINO DX II ] |
|---|---|

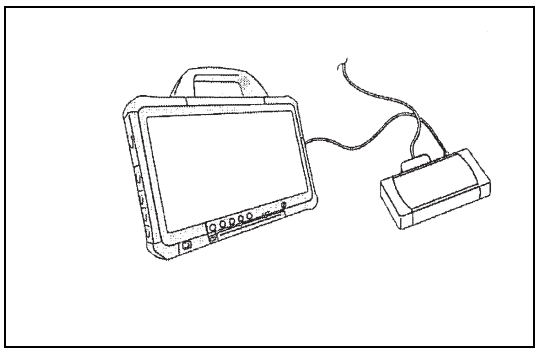

SAPH16F010300369

1. Warm-up the engine. (engine coolant temperature: 60 °C {140 °F} or more)
2. Stop the engine and set the starter switch to the "ON" position.
3. Select [Engine] and check if P0300 has been detected.

**Has DTC P0300 been detected?**

**YES**

**Replace the engine ECU.**
**Perform "After-inspection work" of INFORMATION section.**

**NO**

**Procedure completed.**
**Perform "After-inspection work" of INFORMATION section.**

## Cylinder cut-off test

**<Cylinder cut-off test>**
By stopping fuel injection for one of the cylinders of an engine normally running with six, this test detects combustion abnormalities of each cylinder by the sound difference.

**<Purpose>**
Evaluation of combustion abnormalities of each cylinder by sound difference.

**<Know-how & examples>**
Detect combustion abnormalities of any cylinder from differences in the sound and perform the required corrections.

| 1 | Cylinder cut-off test |
|---|---|

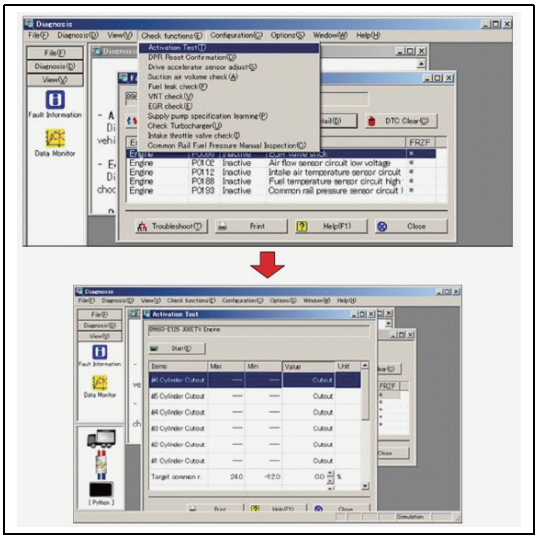

SAPH16F010300370

1. Start the engine and use the cruise control function to run the engine at 1,500 r/min.

2. Check that the engine sound at the time of normal operation. (The sound at this time shall be α.)

3. Select [Cut-off-test] in the [Active test] menu on HINO DX II .

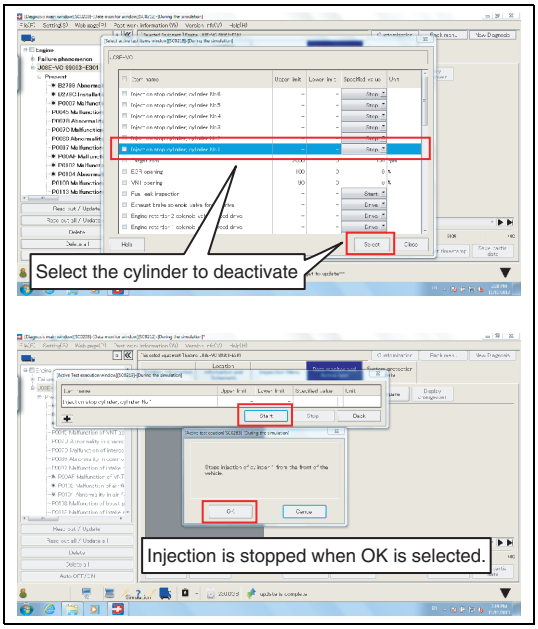


SAPH16F010300371

4. Stop injection for cylinder No. 1 and check the engine sound. (The sound at this time shall be A.) Stop the test after checking.

**HINT**
**During the test, the engine tries to maintain the original six-cylinder speed, but using only five cylinders, so that the sound A becomes larger in comparison with the sound α. (This is not abnormal.)**

5. Sequentially stop the injection for cylinders No. 2, No. 3, No. 4, No. 5, and No. 6 in the same way as for a cylinder No. 1. (The measure sounds shall be B, C, D, E, and F respectively.)

**HINT**

- **When the difference in the sound is difficult to detect, repeat steps 4 and 5.**
- **if one of the sounds A to F is the same as α, always check for a communication problem of the injector.**

**Did you notice a difference in engine sound?**

**YES**

**<One out of A to F is abnormally loud or the same as α>**
**Replace the abnormal injector.**
**Perform "After-inspection work" of INFORMATION section.**

**NO**

**<Comparison of the sounds A to F shows no clear difference>**
**Go to next step of diagnosis flow chart.**

# DTC: P0300 (J08E-WU)

EN01H16F01030F03001062

## P0300: All injector (#1 - #6) Misfire

INFORMATION

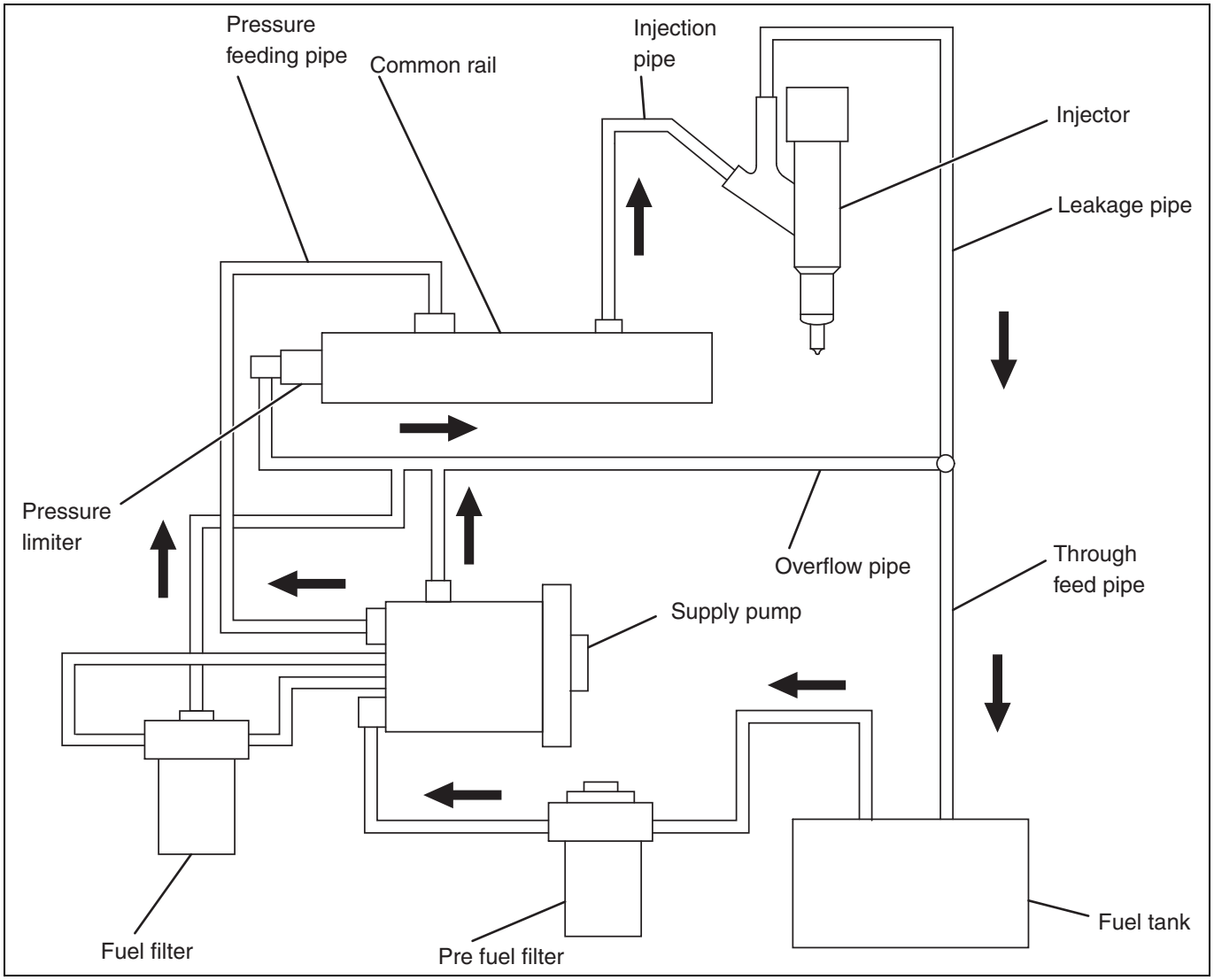


SAPH16F010300372

**1. Technical description**

- The engine speed main sensor (crankshaft position sensor) monitors the engine speed of #1 – #6 cylinders.
- The average injection quantity into #1 – #6 cylinders is increased and decreased so that the engine speed of each cylinder is kept constant.

**<Description of malfunction>**

- Two or more of the following DTCs are detected: P0301, P0302, P0303, P0304, P0305, P0306.

**2. DTC set condition**

(1) DTC detection condition

1. All the following conditions continue for at least 30 seconds:

- Engine speed is between 250 – 900 r/min.
- Fuel injection quantity is within 0 – 50 $mm^3$/st. cyl.
- Exhaust brake and PTO are not in operation.

2. All the following conditions continue for at least 10 seconds:

- Engine speed is in the range shown in table at below.
- Gear position is not changed.
- Fuel injection quantity < 30 $mm^3$/st. cyl.
- Engine coolant temperature ≥ 71 °C {159.8 °F}.
- Throttle opening is 0 %.
- Vehicle speed is 0 mph.
- Exhaust brake and PTO are not in operation.
- No other DTC is detected.

(System normal)

**Engine speed (r/min)**

| | MT | TRANS |
|---|---|---|
| **D range** | **N/A** | **725 - 775** |
| **N range** | **725 - 775** | **N/A** |
| **P range** | **N/A** | **N/A** |

(2) Judgement criteria

- Failure is determined when two or more of P0301, P0302, P0303, P0304, P0305, and P0306 are detected for 3 seconds.

**3. Reset condition**

- After restoration to normal condition.

**4. Indication, warning or system control regulation when the DTC is set.**

- MIL: ON
- SVS light: OFF

**5. Symptoms on the vehicle when the DTC is set**

**<Symptoms on the vehicle due to backup control (fail safe function)>**

- –

**<Symptoms on the vehicle due to malfunction>**

- Excessive vibration while engine is idling.

**6. Pre-inspection work**

- Check that the battery voltage is in the normal range.

**7. After-inspection work**

- Clear all past DTCs.
- Check that no DTC is stored after test drive.

**8. Estimated failure factors**

- Fuel injection line: break, crack, fuel leak
- Cylinder: compression leak
- Injector: clogging, constantly injecting

## INSPECTION PROCEDURE: P0300

| 1 | Inspect the fuel pipes |
|---|---|

1. Check the fuel pipe (high-pressure pipe between the common rail and injector) and verify that there are no bends, ruptures, or loose connections in it.

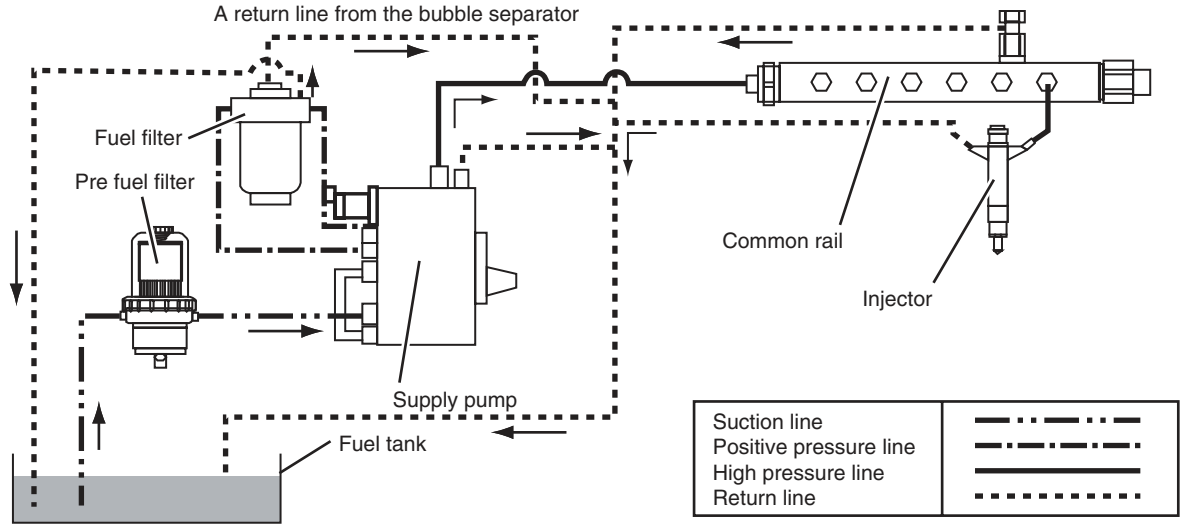


SAPH16F010300373

**Was any failure found?**

**YES**

**Repair or replace the faulty part, go to step 2.**

**NO**

**Go to step 3.**

| 2 | Check the DTC detected (Engine ECU) [HINO DX II ] |
|---|---|

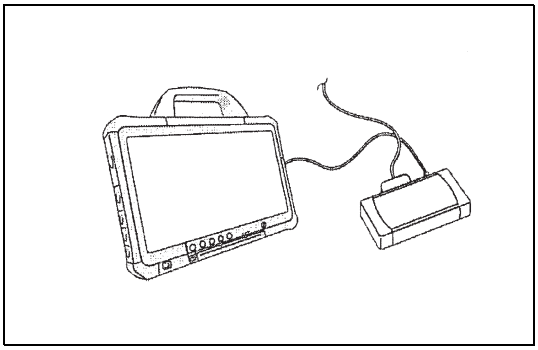

SAPH16F010300374

1. Warm-up the engine. (engine coolant temperature: 80 °C {176 °F} or more)
2. Stop the engine and set the starter switch to the "ON" position.
3. Select [Engine] and check if P0300 has been detected.

**Has DTC P0300 been detected?**

**YES**

**Go to step 3.**

**NO**

**Procedure completed.**
**Perform "After-inspection work" of INFORMATION section.**

| 3 | Perform the cylinder cut-off test [HINO DX II ] |
|---|---|

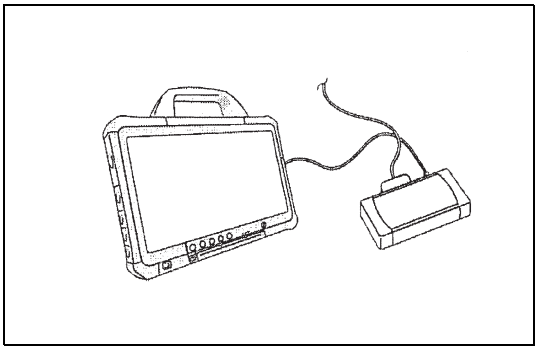

SAPH16F010300375

1. Use the cruise function to run the engine at 1,500 r/min.
2. Check the engine sound during normal operation.
3. Select [Engine], and [Active test Setting] to perform a cut-off test. For details, refer to "Cylinder cut-off test" procedure.

**<Cylinder cut-off test>**

- This method is generally used to check combustion abnormalities by stopping the fuel injection for one of the cylinder of a six-cylinder engine and verifying the injectors' sound.

**Did you notice a difference in engine sound?**

**YES**

**<There is a clear difference in sound or performance when the injection is cut-off>**
**Go to step 4.**

**NO**

**<There is no difference in sound or performance when the injection is cut-off>**
**Replace the injector. (Replace the failed injector detected by the cut-off test, not the injector noted in the DTC.)**
**Go to step 5 after replacement.**

| 4 | Check the DTC detected (Engine ECU) 2 [HINO DX II ] |
|---|---|

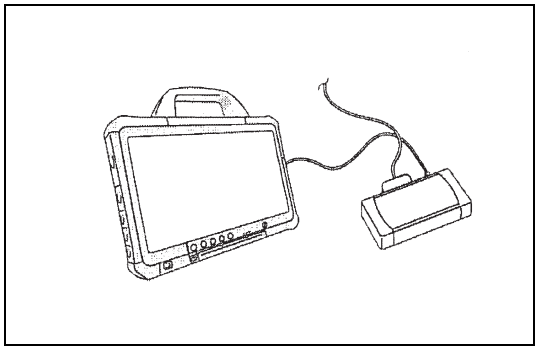

SAPH16F010300376

1. Warm-up the engine. (engine coolant temperature: 80 °C {176 °F} or more)
2. Stop the engine and set the starter switch to the "ON" position.
3. Select [Engine] and check if P0300 has been detected.

**Has DTC P0300 been detected?**

**YES**

**Go to step 5.**

**NO**

**Procedure completed.**
**Perform "After-inspection work" of INFORMATION section.**

| 5 | Replace the common rail assembly [HINO DX II ] |
|---|---|

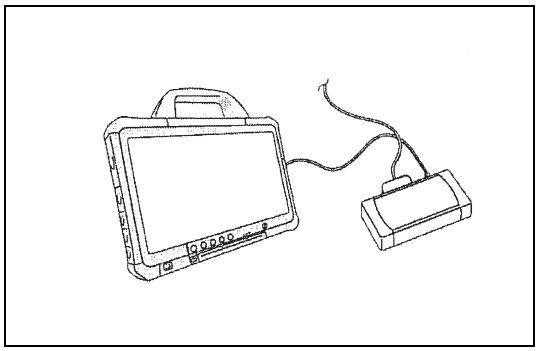

SAPH16F010300377

1. Set the starter switch to the "LOCK" position.
2. Replace the common rail assembly with a new one.
3. Warm-up the engine. (engine coolant temperature: 80 °C {176 °F} or more)
4. Stop the engine and set the starter switch to the "ON" position.
5. Select [Engine] and check if P0300 has been detected.

**Has DTC P0300 been detected?**

**YES**

**Go to step 6.**

**NO**

**Procedure completed.**
**Perform "After-inspection work" of INFORMATION section.**

| 6 | Check the compression ratio |
|---|---|

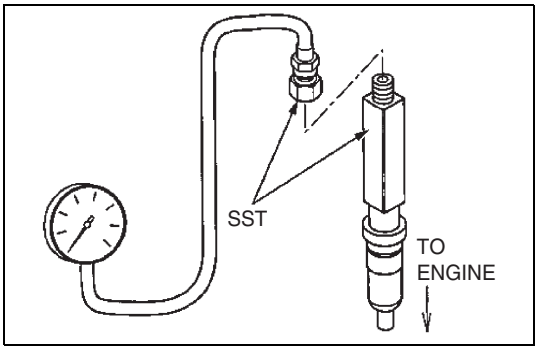


SAPH16F010300378

1. Warm-up the engine. (engine coolant temperature: 80 °C {176 °F} or more)
2. Stop the engine.
3. Remove injectors from all cylinders.
4. Install the special tool (SST) and measure the compression ratio of each cylinder.

| Measurement conditions | Standard values |
|---|---|
| **Engine revolution: 150 r/min** | **Standard values: 3.2 – 3.4 MPa {33 – 35 kgf/cm$^2$} Limit: 2.3 MPa {24 kgf/cm$^2$}** |

**Do the measurements meet the standard value?**

**YES**

**Go to step 7.**

**NO**

**Overhaul the engine. Perform "After-inspection work" of INFORMATION section.**

| 7 | Check the DTC detected (Engine ECU) 3 [HINO DX II ] |
|---|---|

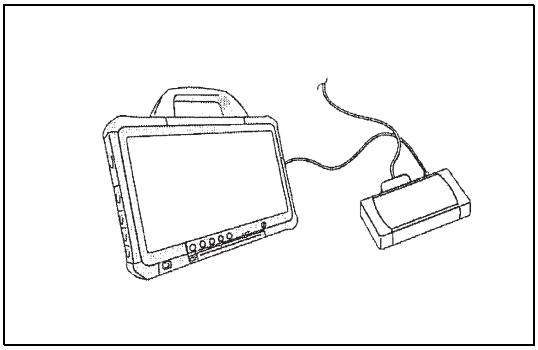

SAPH16F010300379

1. Warm-up the engine. (engine coolant temperature: 80 °C {176 °F} or more)
2. Stop the engine and set the starter switch to the "ON" position.
3. Select [Engine] and check if P0300 has been detected.

**Has DTC P0300 been detected?**

**YES**

**Replace the engine ECU.**
**Perform "After-inspection work" of INFORMATION section.**

**NO**

**Procedure completed.**
**Perform "After-inspection work" of INFORMATION section.**

## Cylinder cut-off test

**<Cylinder cut-off test>**
By stopping fuel injection for one of the cylinders of an engine normally running with six, this test detects combustion abnormalities of each cylinder.

**<Purpose>**
Evaluation of combustion abnormalities of each cylinder by sound difference.

**<Know-how & examples>**
Detect combustion abnormalities of any cylinder from differences in the sound and perform the required corrections.

| 1 | Cylinder cut-off test |
|---|---|

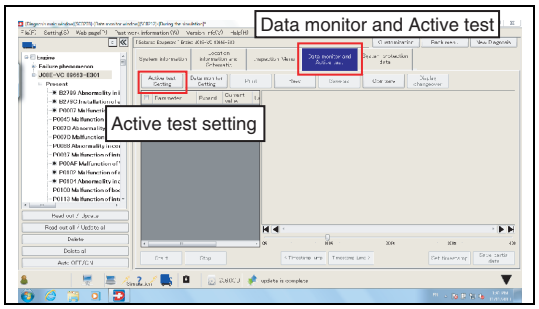


1. Start the engine and use the cruise control function to run the engine at 1,500 r/min.

2. Check that the engine sound at the time of normal operation. (The sound at this time shall be α.)

3. Select [Active test Setting] in the [Data monitor and Active test] menu on HINO DX II .

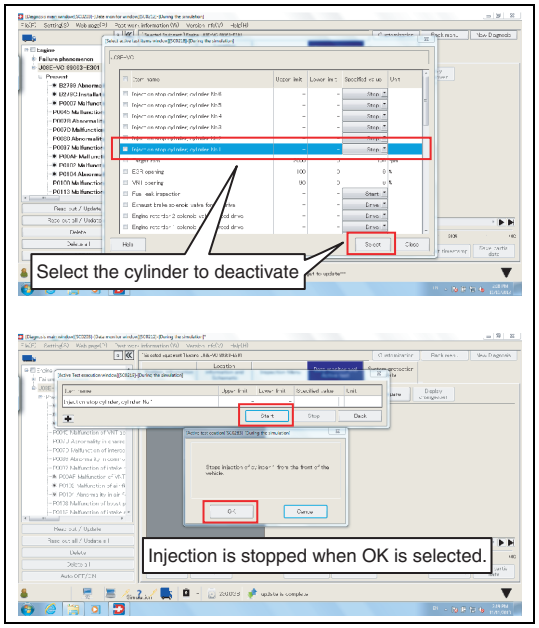


SAPH16F010300381

4. Stop injection for cylinder No. 1 and check the engine sound. (The sound at this time shall be A.) Stop the test after checking.

**HINT**
**During the test, the engine tries to maintain the original six-cylinder speed, but using only five cylinders, so that the sound A becomes larger in comparison with the sound α. (This is not abnormal.)**
**As the engine is running with combustion of one cylinder less than normal, it is normal that the vibrations increase.**
**For an engine with no injection or reduced injection quantity, injection stop causes no vibration change.**
**For engines increasing the injection quantity for some cylinders, the vibrations become larger when all cylinders are operating, and the vibrations decrease when injection is stopped for the defective cylinder.**

5. Sequentially stop the injection for cylinders No. 2, No. 3, No. 4, No. 5, and No. 6 in the same way as for a cylinder No. 1. (The measure sounds shall be B, C, D, E, and F respectively.)

**HINT**
- **When the difference in the sound is difficult to detect, repeat steps 4 and 5.**
- **if one of the sounds A to F is the same as α, always check for a communication problem of the injector.**

| Did you notice a difference in engine sound? |
|---|

**YES**

**<One out of A to F is abnormally loud or the same as α>**
**Replace the abnormal injector.**
**Perform "After-inspection work" of INFORMATION section.**

**NO**

**Comparison of the sounds A to F shows no clear difference**
**Go to next step of diagnosis flow chart.**

# DTC: P0301, P0302, P0303, P0304, P0305 and P0306

EN01H16F01030F03001063

**P0301: #1 Misfire**
**P0302: #2 Misfire**
**P0303: #3 Misfire**
**P0304: #4 Misfire**
**P0305: #5 Misfire**
**P0306: #6 Misfire**
INFORMATION

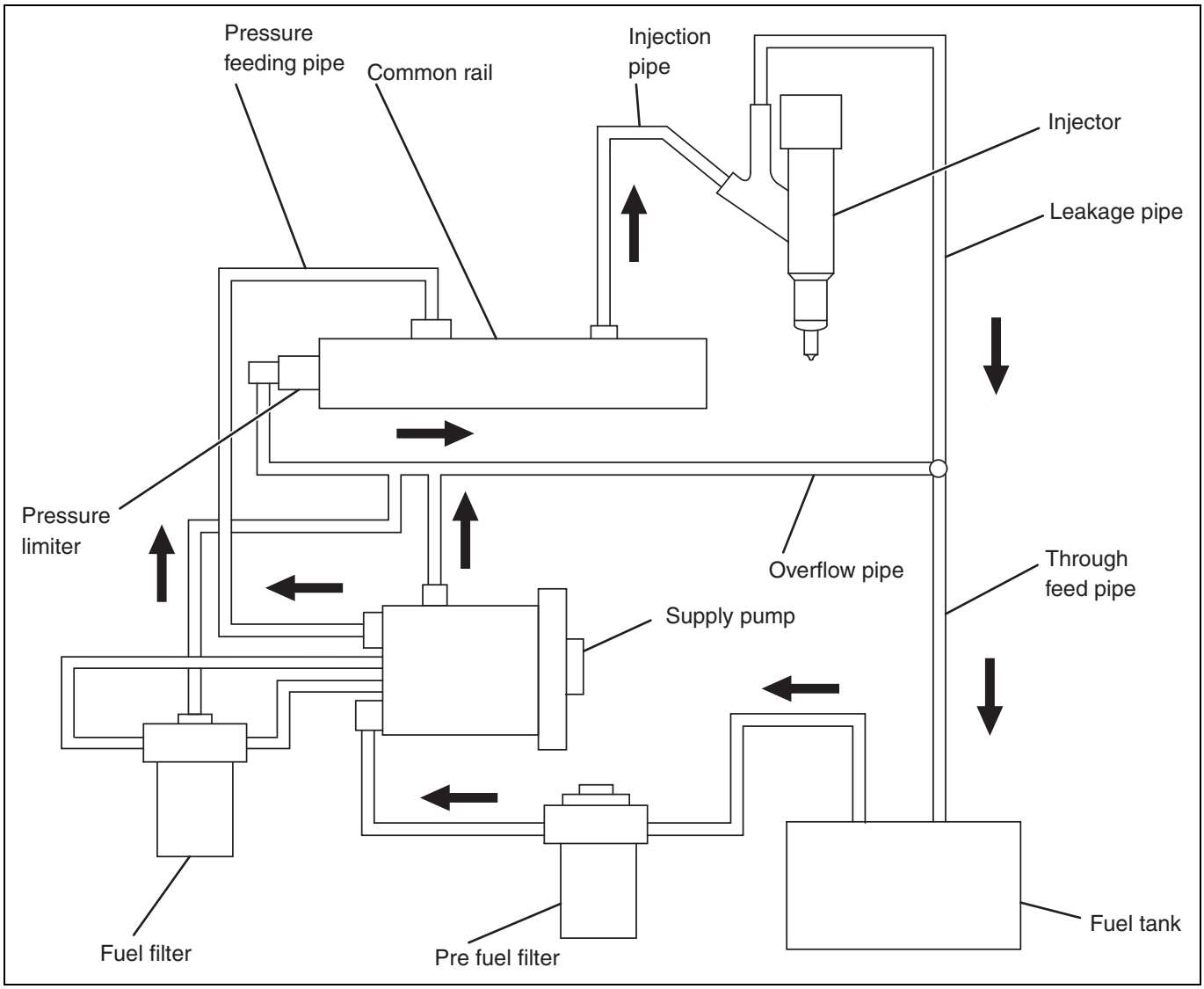


SAPH16F010300382

**1. Technical description**

- The engine main speed sensor (NE sensor) is used to calculate the transit time of the #1 or #2 or #3 or #4 or #5 or #6 cylinder for every 30° of crank angle.
- The mean value of the angular acceleration for the expansion stroke of each cylinder is calculated at all times from the transit time for every 30° of crank angle.
- Flame-out of #1 or #2 or #3 or #4 or #5 or #6 is detected by comparing the angular acceleration of the #1 or #2 or #3 or #4 or #5 or #6 cylinder of the crank angle in the expansion stroke and the mean angular acceleration of the cylinders other than the #1 or #2 or #3 or #4 or #5 or #6 cylinder.

**<Description of malfunction>**

- When a flame-out rate of 5 % or more is detected, it is considered to be an abnormality.
  *A flame-out ratio of 5 % means that injection was not possible 150 times out of the 3000 injections for 1000 revolutions of the engine.

**2. DTC set condition**

(1) DTC detection condition

1. All the following conditions continue for more than 10 seconds.
   - Engine speed is between 750 – 2,100 r/min.
   - The fuel injection quantity is within 5 to 110 $mm^3$/st. cyl.
   - The exhaust brake and PTO are inactive.
   - Engine speed range is 500 r/min/sec or less.
   - The coolant temperature is above 60 °C {140 °F}.
   - Atmospheric pressure is 75 kPa {10.9 psi} or more.

(2) Judgment criteria

- -

**3. Reset condition**

- After restoration to normal condition.

**4. Indication, warning or system control regulation when the DTC is set.**

- MIL: ON
- SVS light: OFF

**5. Symptoms on the vehicle when the DTC is set**

**<Symptoms on the vehicle due to backup control (fail safe function)>**

- –

**<Symptoms on the vehicle due to malfunction>**

- Excessive vibration while engine is idling.

**6. Pre-inspection work**

- Check that the battery voltage is in the normal range.

**7. After-inspection work**

- Clear all past DTCs.
- Check that no DTC is stored after test drive.

**8. Estimated failure factors**

- Fuel injection line: break, crack, fuel leak, clogging
- Injector: clogging

## INSPECTION PROCEDURE: P0301, P0302, P0303, P0304, P0305 and P0306

| 1 | Check the DTC detected (Engine ECU) 1 [HINO DX ll ] |
|---|---|

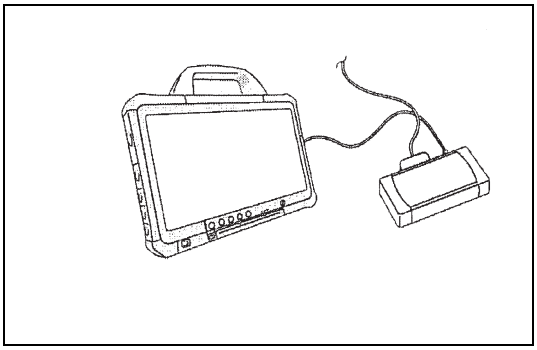

SAPH16F010300383

1. Warm up the engine. (engine coolant temperature: 60°C {140 °F} or more)
2. Stop the engine and set the starter switch to the "LOCK" position.
3. Connect the vehicle to HINO DX II .
4. Set the starter switch to the "ON" position.
5. Select [Engine] and check if any DTC other than (P0301, P0302, P0303, P0304, P0305 or P0306) has been detected.

**Has any DTC other than (P0301, P0302, P0303, P0304, P0305 or P0306) been detected?**

**YES** → **Go to diagnosis procedure of a related DTC.**

**NO** → **Go to step 2.**

| 2 | Inspect the fuel pipes |
|---|---|

1. Check the fuel pipe (high-pressure pipe between the common rail and injector) and verify that there are no fuel leak, break, crush, or loose connections in it.

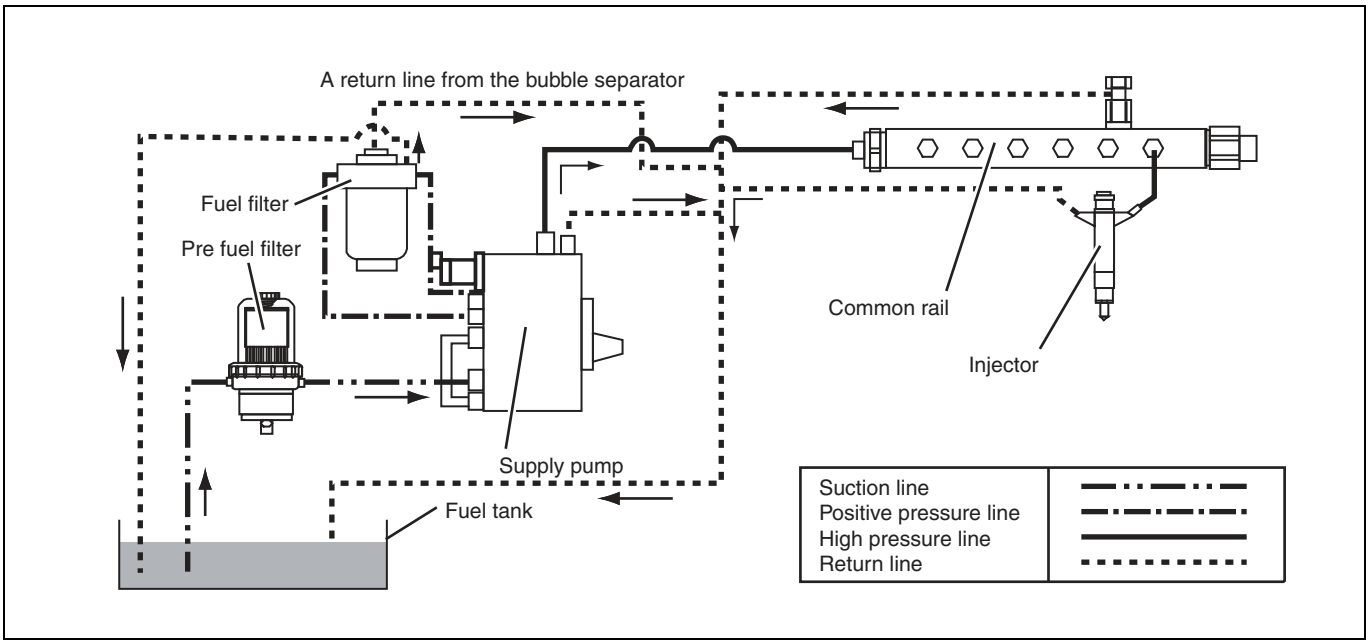


SAPH16F010300384

**Was any failure found?**

YES

**Repair or replace the faulty part.**
**Go to step 3 after repair or replacement.**

NO

**Go to step 4.**

## 3 Check the DTC detected (Engine ECU) 2 [HINO DX II ]

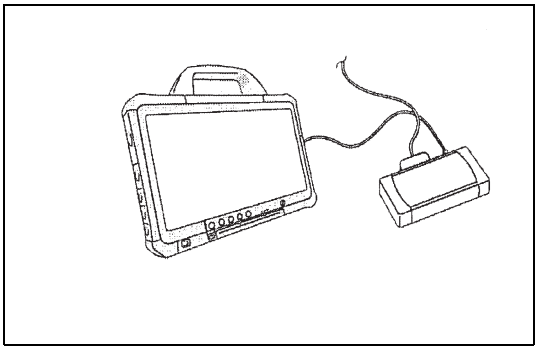

SAPH16F010300385

1. Warm up the engine. (engine coolant temperature: 60 °C {140 °F} or more)
2. Stop the engine and the starter switch to the "ON" position.
3. Select [Engine] and check if the DTC (P0301, P0302, P0303, P0304, P0305 and P0306) has been detected.

**Has DTC (P0301, P0302, P0303, P0304, P0305 and P0306) been detected?**

YES

**Go to step 4.**

NO

**Procedure completed.**
**Perform "After-inspection work" of INFORMATION section.**

## 4 Perform the cylinder cut-off test [HINO DX II ]

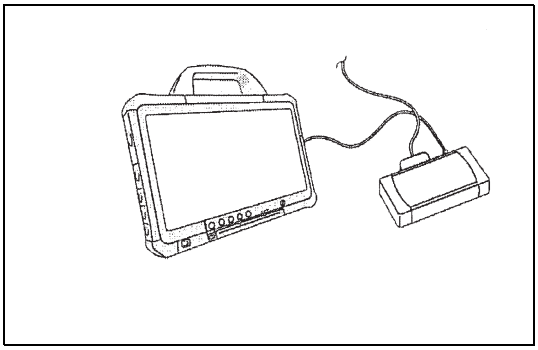

SAPH16F010300386

1. Start the engine and use the cruise function to run the engine at 1,500 r/min.
2. Check the engine sound during normal operation.
3. Select [Engine], and [Active test Setting] to perform a [cut-off test]. For details, refer to the “Cylinder cut-off test” procedure.

**<Cylinder cut-off test>**

- This method is generally used to check combustion abnormalities by stopping the fuel injection for one of the cylinder of a six-cylinder engine and verifying the injectors' sound.

**Did you find the engine sound different?**

**YES**

**<There is a clear difference in sound or performance when the injection is cut-off>**
**Replace the injector. (Replace the failed injector detected by the cut-off test, not the injector noted in the DTC.)**
**Go to step 5 after repair or replacement.**

**NO**

**<There is no difference in sound or performance when the injection is cut off>**
**Go to step 6.**

| 5 | Check the DTC detected (Engine ECU) 3 [HINO DX II ] |
|---|---|

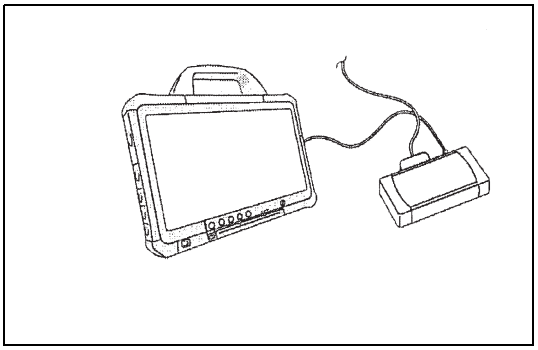

SAPH16F010300387

1. Warm up the engine. (engine coolant temperature: 60 °C {140 °F} or more)
2. Stop the engine and the starter switch to the "ON" position.
3. Select [Engine] and check if the DTC (P0301, P0302, P0303, P0304, P0305 or P0306) has been detected.

**Has DTC (P0301, P0302, P0303, P0304, P0305 or P0306) been detected?**

**YES**

**Go to step 6.**

**NO**

**Procedure completed.**
**Perform "After-inspection work" of INFORMATION section.**

| 6 | Replace the common rail assembly [HINO DX II ] |
|---|---|

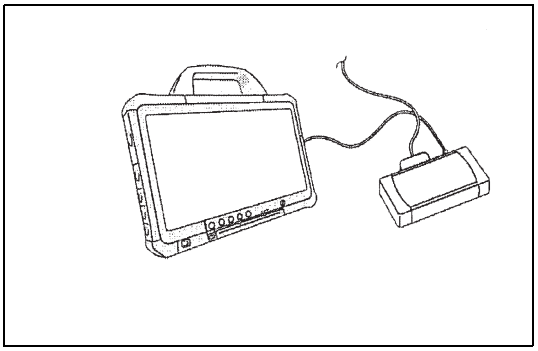

SAPH16F010300388

1. Set the starter switch to the "LOCK" position.
2. Replace the common rail assembly.
3. Warm up the engine. (engine coolant temperature: 60 °C {140 °F} or more)
4. Stop the engine and the starter switch to the "ON" position.
5. Select [Engine] and check if the DTC (P0301, P0302, P0303, P0304, P0305 or P0306) has been detected.

**Has DTC (P0301, P0302, P0303, P0304, P0305 or P0306) been detected?**

**YES**

**Go to step 7.**

**NO**

**Procedure completed.**
**Perform "After-inspection work" of INFORMATION section.**

| 7 | Check the DTC detected (Engine ECU) 4 [HINO DX II ] |
|---|---|

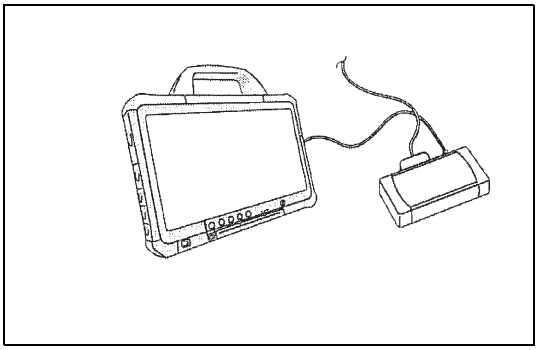

SAPH16F010300389

1. Warm up the engine. (engine coolant temperature: 60 °C {140 °F} or more)
2. Stop the engine and the starter switch to the "ON" position.
3. Select [Engine] and check if the DTC (P0301, P0302, P0303, P0304, P0305 and P0306) has been detected.

**Has DTC (P0301, P0302, P0303, P0304, P0305 and P0306) been detected?**

**YES**

**Replace the engine ECU.**
**Perform "After-inspection work" of INFORMATION section.**

**NO**

**Procedure completed.**
**Perform "After-inspection work" of INFORMATION section.**

## Cylinder cut-off test

**<Cylinder cut-off test>**
By stopping fuel injection for one of the cylinders of an engine normally running with six, this test detects combustion abnormalities of any cylinder by the sound difference.

**<Purpose>**
Evaluation of combustion abnormalities of each cylinder by sound difference.

**<Know-how & examples>**
Detect combustion abnormalities of any cylinder from differences in the sound and perform the required corrections.

| 1 | Cylinder cut-off test |
|---|---|

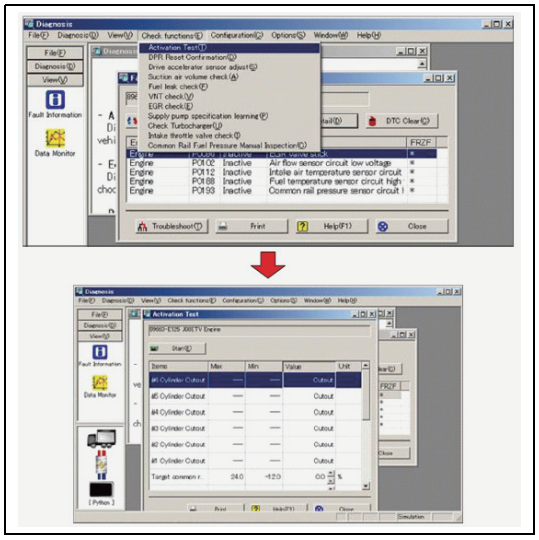

SAPH16F010300390

1. Start the engine and use the cruise control function to run the engine at 1,500 r/min.
2. Check that the engine sound at the time of normal operation. (The sound at this time shall be α.)
3. Select [Cut-off-test] in the [Active test] menu on HINO DX II .

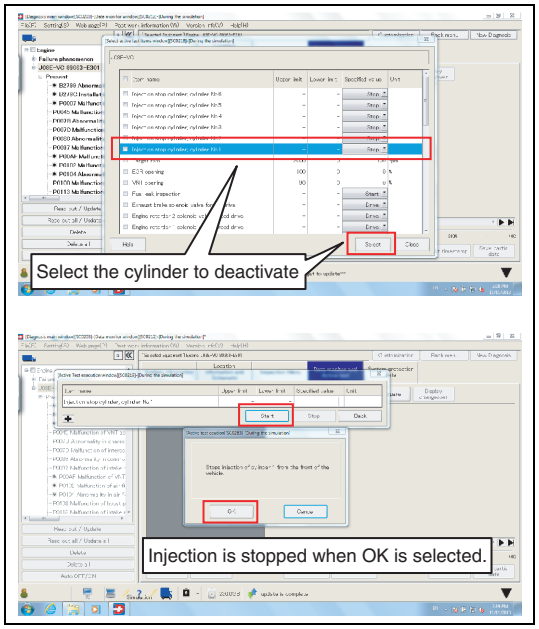


SAPH16F010300391

4. Stop injection for cylinder No. 1 and check the engine sound. (The sound at this time shall be A.) Stop the test after checking.

**HINT**
**During the test, the engine tries to maintain the original six-cylinder speed, but using only five cylinders, so that the sound A becomes larger in comparison with the sound α. (This is not abnormal.)**

5. Sequentially stop the injection for cylinders No. 2, No. 3, No. 4, No. 5, and No. 6 in the same way as for a cylinder No. 1. (The measure sounds shall be B, C, D, E, and F respectively.)

**HINT**

- **When the difference in the sound is difficult to detect, repeat steps 4 and 5.**
- **if one of the sounds A to F is the same as α, always check for a communication problem of the injector.**

**Did you notice a difference in engine sound?**

**YES**

**<One out of A to F is abnormally loud or the same as α>**
**Replace the injector**
**Perform "After-inspection work" of INFORMATION section.**

**NO**

**<Comparison of the sounds A to F shows no clear difference>**
**Go to next step of diagnosis flow chart.**

# DTC: P0335

EN01H16F01030F03001064

## P0335: Crankshaft position sensor - disconnection

INFORMATION

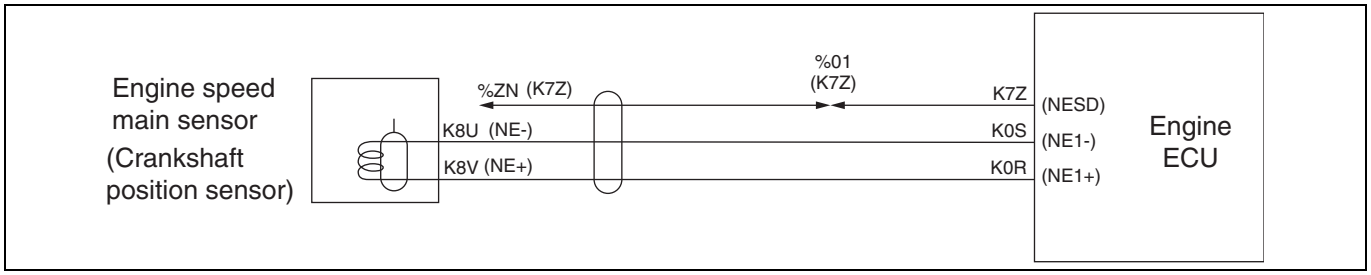


SAPH16F010300392

**1. Technical description**

- The crankshaft position sensor (engine speed main sensor) consistently measures pulses from the crankshaft position sensor (engine speed main sensor).

**<Description of malfunction>**

- Pulses from the crankshaft position sensor (engine speed main sensor) cannot be sensed.

**2. DTC set condition**

(1) Check conditions

- Starter switch ON.
- Battery voltage is in the range of 10 V to 16 V.
- Engine speed of 0 r/min or more

(2) Judgment criteria

- With the engine running, the engine speed main sensor does not detect pulses for continuous 0.8 seconds or longer. (at 750 r/min)

**3. Reset condition**

- After normal operation is restored.

**4. Indication, warning or system control regulation when the DTC is set.**

- MIL: ON
- SVS light: OFF
- Engine output is restricted.
- Cruise control function is not available.
- Idling stop system is not available.

**5. Symptoms on the vehicle when the DTC is set**

**<Symptoms on the vehicle due to backup control (fail safe function)>**

- Engine output is insufficient.
- Cruise control does not work.
- Idling stop system does not work.

**<Symptoms on the vehicle due to malfunction>**

- –

**6. Pre-inspection work**

- Check that the battery voltage is in the normal range.

**7. After-inspection work**

- Clear all past DTCs.
- Check that no DTC is stored after test drive.

**8. Estimated failure factors**

- Abnormal resistance of sensor
- Sensor is disconnected from measuring site or sensing unit is malfunctioning (due to adhesion of dirt, damage, etc.)
- Irregular contact (disconnection or poor fit of connector)
- Harness disconnection or short-circuit

## INSPECTION PROCEDURE: P0335

| 1 | Inspect the crankshaft position sensor (engine speed main sensor) connector |
|---|---|

1. Check the connection of the crankshaft position sensor (engine speed main sensor) connector (Looseness and poor contact).

**Was any failure found?**

**YES**

**Connect securely, repair if needed.**
**Perform "After-inspection work" of INFORMATION section.**

**NO**

**Go to step 2.**

| 2 | Inspect the crankshaft position sensor (engine speed main sensor) |
|---|---|

1. Check the installation of the crankshaft position sensor (engine speed main sensor).
2. Make sure there is no dirt or damage to the crankshaft position sensor (engine speed main sensor).

**Was any failure found?**

**YES**

**Clean the crankshaft position sensor (engine speed main sensor) and install it properly.**
**If damaged, replace the crankshaft position sensor (engine speed main sensor).**
**Perform "After-inspection work" of INFORMATION section.**

**NO**

**Go to step 3.**

| 3 | Inspect the crankshaft position sensor (engine speed main sensor) unit |
|---|---|

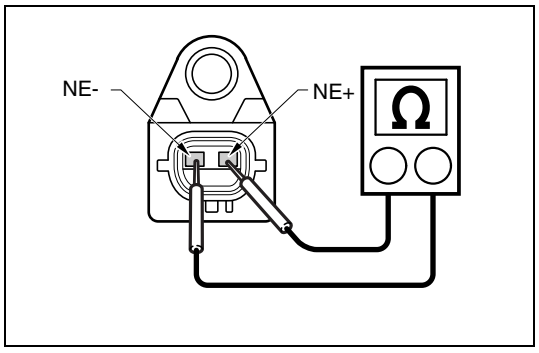


SAPH16F010300393

1. Set the starter switch to the "LOCK" position.
2. Disconnect the crankshaft position sensor (engine speed main sensor) connector.
3. Use the electrical tester to measure the resistance between the terminals of the crankshaft position sensor (engine speed main sensor).

| Measurement conditions | Tester connections | Standard values |
|---|---|---|
| **Starter switch: LOCK** | **Crankshaft position sensor (engine speed main sensor) NE+ – NE-** | **20 °C {68 °F}: 108.5 – 142.5 Ω** |

**Do the measurements meet the standard value?**

**YES**

**Go to step 4.**

**NO**

**Replace the crankshaft position sensor (engine speed main sensor).**
**Perform "After-inspection work" of INFORMATION section.**

| 4 | **Inspect for short-circuit of the crankshaft position sensor (engine speed main sensor) harness** |
|---|---|

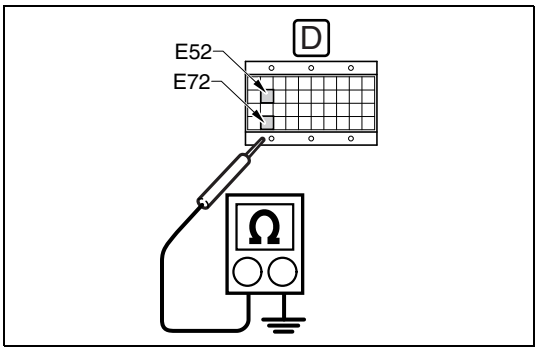


SAPH16F010300394

1. Set the starter switch to the "LOCK" position.
2. Connect the signal check harness to the engine ECU (vehicle-side harness). (Do not connect the harness to the ECU.)
3. Use the electrical tester to measure the resistance between the terminals of the engine ECU (signal check harness) and ground.

| Measurement conditions | Tester connections | Standard values |
|---|---|---|
| Starter switch: LOCK | Engine ECU (signal check harness) NE1+(E52) – Ground<br>NE1-(E72) – Ground | ∞ Ω |

**Do the measurements meet the standard value?**

**YES**

**Go to step 5.**

**NO**

**Repair or replace the harness.**
**Perform "After-inspection work" of INFORMATION section.**

| 5 | Inspect disconnection of the crankshaft position sensor (engine speed main sensor) harness |
|---|---|

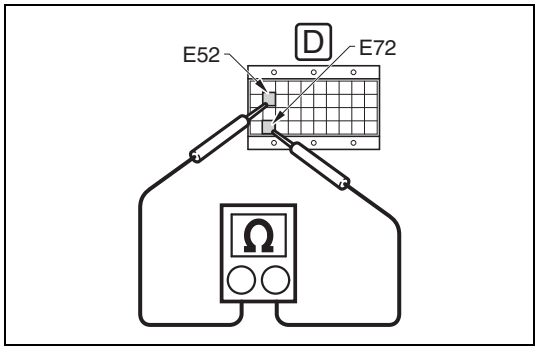

SAPH16F010300395

1. Connect the crankshaft position sensor (engine speed main sensor) connector.
2. Use the electrical tester to measure the resistance between the terminals of the engine ECU (signal check harness).

| Measurement conditions | Tester connections | Standard values |
|---|---|---|
| **Starter switch: LOCK** | **Engine ECU (signal check harness) NE1+(E52) – NE1-(E72)** | **20 °C {68 °F}: 108.5 – 142.5 Ω** |

**Do the measurements meet the standard value?**

**YES**

**Go to step 6.**

**NO**

**Repair or replace the harness.**
**Perform "After-inspection work" of INFORMATION section.**

| 6 | Check the DTC detected (Engine ECU) [HINO DX II ] |
|---|---|

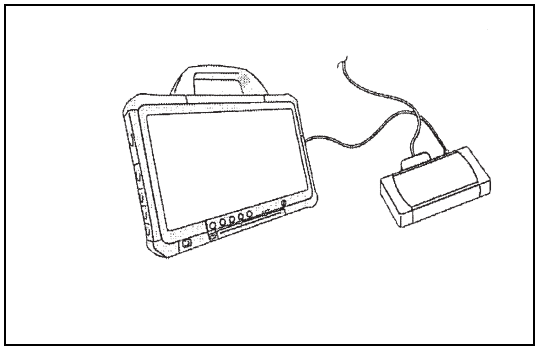
SAPH16F010300396

1. Perform engine warm-up. (engine coolant temperature: 60 °C {140 °F} or more)
2. Stop the engine and set the starter switch to the "LOCK" position.
3. Connect the vehicle to HINO DX II .
4. Set the starter switch to the "ON" position.
5. Select [Engine] and check if P0335 has been detected.

**Has DTC P0335 been detected?**

**YES**

**Replace the engine ECU.**
**Perform "After-inspection work" of INFORMATION section.**

**NO**

**Procedure completed.**
**Perform "After-inspection work" of INFORMATION section.**

# DTC: P0336

EN01H16F01030F03001065

## P0336: Crankshaft position sensor - rationality

INFORMATION

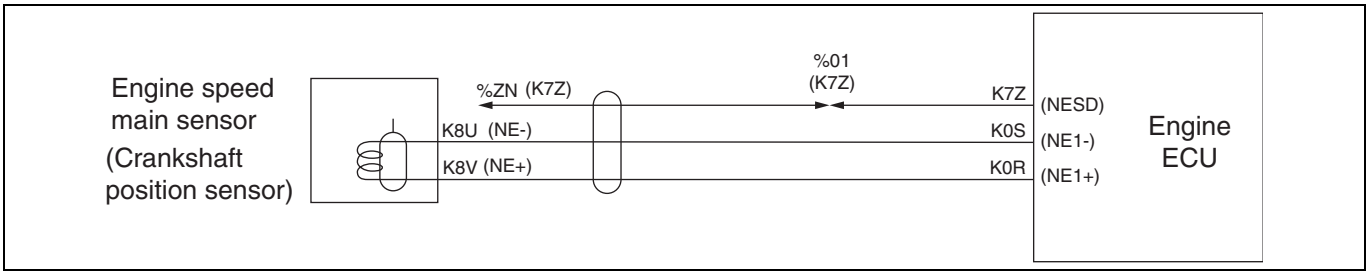


SAPH16F010300397

**1. Technical description**

- The crankshaft position sensor (engine speed main sensor) consistently measures pulses from the crankshaft position sensor (engine speed main sensor).

**<Description of malfunction>**

- Pulses from the crankshaft position sensor (engine speed main sensor) cannot be correctly sensed.

**2. DTC set condition**

(1) Check conditions

- Starter switch ON.
- Battery voltage is in the range of 10 V to 16 V.
- Engine speed of 0 r/min or more

(2) Judgment criteria

- Make a judgment when the abnormal number of the engine speed main sensor pulses (not 56 pulses) per engine revolution is continuously detected. For example, 50 seconds at 750 r/min

**3. Reset condition**

- After normal operation is restored.

**4. Indication, warning or system control regulation when the DTC is set.**

- MIL: ON
- SVS light: OFF
- Engine output is restricted.
- Cruise control function is not available.
- Idling stop system is not available.

**5. Symptoms on the vehicle when the DTC is set**

**<Symptoms on the vehicle due to backup control (fail safe function)>**

- Engine output is insufficient.
- Cruise control does not work.
- Idling stop system does not work.

**<Symptoms on the vehicle due to malfunction>**

- –

**6. Pre-inspection work**

- Check that the battery voltage is in the normal range.

**7. After-inspection work**

- Clear all past DTCs.
- Check that no DTC is stored after test drive.

**8. Estimated failure factors**

- Abnormal resistance of sensor
- Improper pulses
- Sensor is disconnected from measuring site or sensing unit is malfunctioning (due to adhesion of dirt, damage, etc.)
- Irregular contact (disconnection or poor fit of connector)
- Harness disconnection or short-circuit

## INSPECTION PROCEDURE: P0336

| 1 | Inspect the crankshaft position sensor (engine speed main sensor) connector |
|---|---|

1. Check the connection of the crankshaft position sensor (engine speed main sensor) connector (Looseness and poor contact).

**Was any failure found?**

**YES**

**Connect securely, repair if needed.**
**Perform "After-inspection work" of INFORMATION section.**

**NO**

**Go to step 2.**

| 2 | Inspect the crankshaft position sensor (engine speed main sensor) |
|---|---|

1. Check the installation of the crankshaft position sensor (engine speed main sensor).
2. Make sure there is no dirt or damage to the crankshaft position sensor (engine speed main sensor).

**Was any failure found?**

**YES**

**Clean the crankshaft position sensor (engine speed main sensor) and install it properly.**
**If damaged, replace the crankshaft position sensor (engine speed main sensor).**
**Perform "After-inspection work" of INFORMATION section.**

**NO**

**Go to step 3.**

| 3 | Inspect disconnection of the crankshaft position sensor (engine speed main sensor) harness |
|---|---|

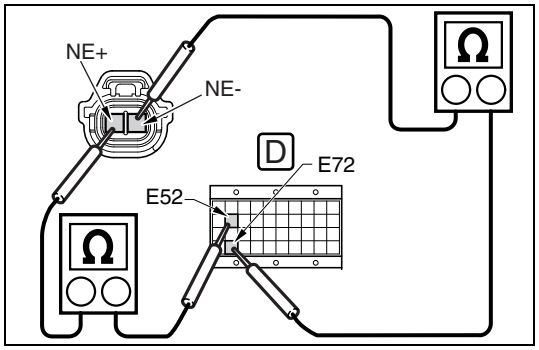

SAPH16F010300398

1. Set the starter switch to the "LOCK" position.
2. Connect the signal check harness to the engine ECU vehicle-side harness. (Do not connect the harness to the ECU.)
3. Use the electrical tester to measure the resistance between the terminals of the engine ECU (signal check harness) and crankshaft position sensor (engine speed main sensor) vehicle-side connector.

| Measurement conditions | Tester connections | Standard values |
|---|---|---|
| **Starter switch: LOCK** | **Engine ECU (signal check harness) – Crankshaft position sensor (engine speed main sensor) vehicle-side connector NE1+(E52) – NE+ NE1-(E72) – NE-** | **Less than 2 Ω** |

**Do the measurements meet the standard value?**

**YES**

**Go to step 4.**

**NO**

**Repair or replace the harness.**
**Perform "After-inspection work" of INFORMATION section.**

| 4 | Inspect for short-circuit of the crankshaft position sensor (engine speed main sensor) harness |
|---|---|

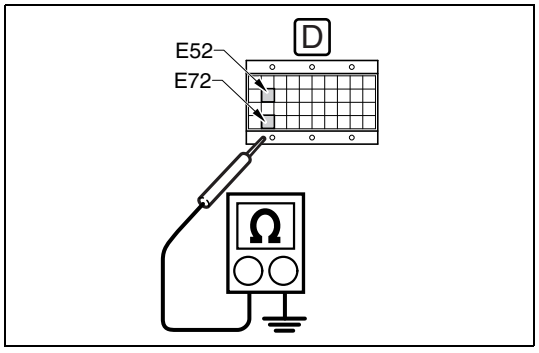

SAPH16F010300399

1. Use the electrical tester to measure the resistance between the terminals of the engine ECU (signal check harness) and ground.

| Measurement conditions | Tester connections | Standard values |
|---|---|---|
| **Starter switch: LOCK** | **Engine ECU (signal check harness) NE1+(E52) – Ground NE1-(E72) – Ground** | **∞ Ω** |

**Do the measurements meet the standard value?**

| YES | NO |
|---|---|
| **Go to step 5.** | **Repair or replace the harness.<br>Perform "After-inspection work" of INFORMATION section.** |

| 5 | Check the crankshaft position sensor (engine speed main sensor) signal |
|---|---|

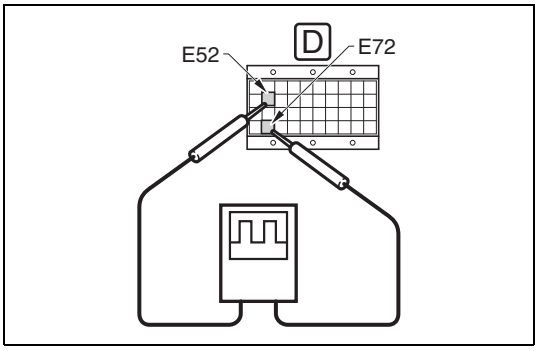


SAPH16F010300400

1. Connect the signal check harness to the engine ECU.
2. Connect the crankshaft position sensor (engine speed main sensor) connector.
3. Start the engine.
4. Use the oscilloscope to measure the signal voltage between the terminals in the engine ECU (signal check harness).

| Measurement conditions | Tester connections | Standard values |
|---|---|---|
| With engine idling | Engine ECU (signal check harness) NE1+(E52) – NE1-(E72) | Pulse 56 |

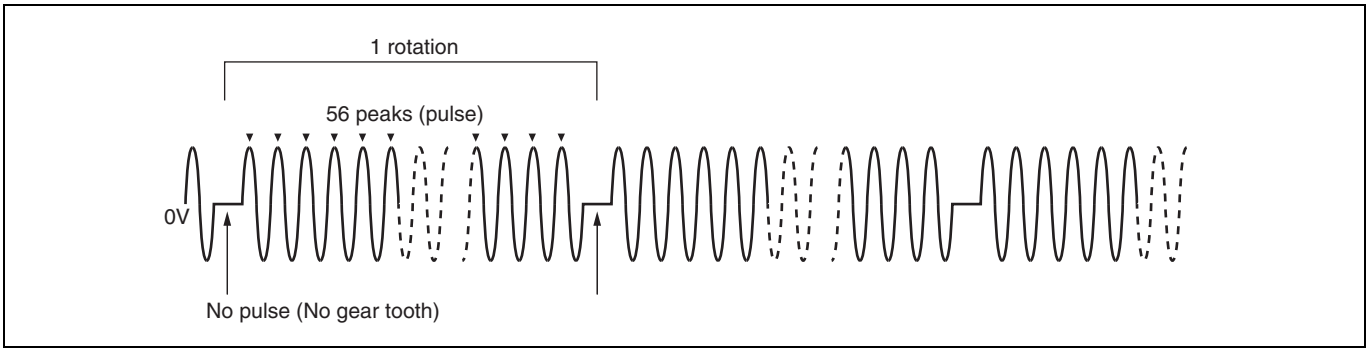


SAPH16F010300401

**Do the measurements meet the standard value?**

| YES | NO |
|---|---|
| **Go to step 6.** | **Replace the crankshaft position sensor (engine speed main sensor).<br>Perform "After-inspection work" of INFORMATION section.** |

| 6 | Check the DTC detected (Engine ECU) [HINO DX ll ] |
|---|---|

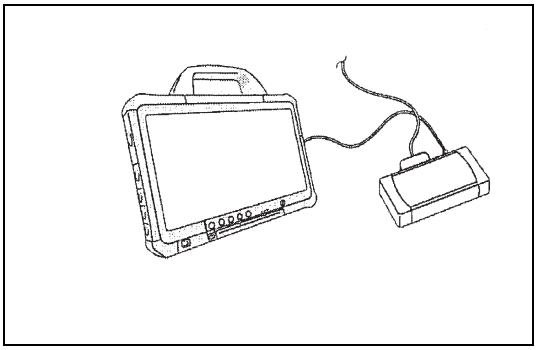

SAPH16F010300402

1. Perform engine warm-up. (engine coolant temperature: 60 °C {140 °F} or more)
2. Stop the engine and set the starter switch to the "LOCK" position.
3. Connect the vehicle to HINO DX II .
4. Set the starter switch to the "ON" position.
5. Select [Engine] and check if P0336 has been detected.

**Has DTC P0336 been detected?**

**YES**

**Replace the engine ECU.**
**Perform "After-inspection work" of INFORMATION section.**

**NO**

**Procedure completed.**
**Perform "After-inspection work" of INFORMATION section.**

# DTC: P0340

EN01H16F01030F03001066

## P0340: Camshaft position sensor - disconnection

INFORMATION

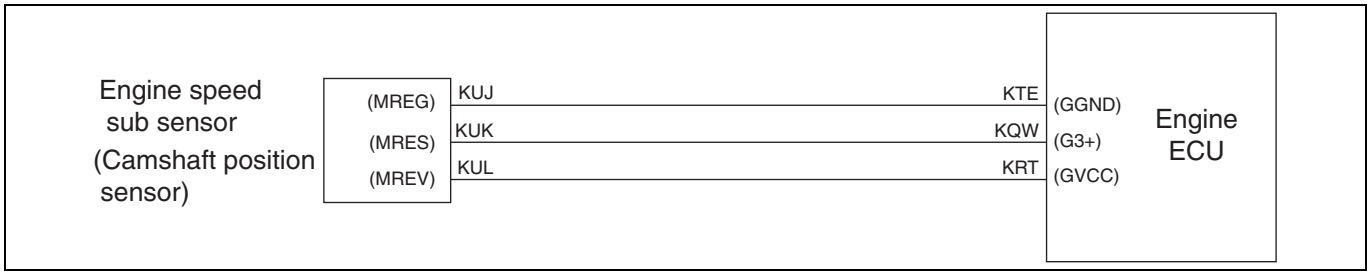


SAPH16F010300403

**1. Technical description**

- The camshaft position sensor (engine speed sub sensor) consistently measures pulses from the camshaft position sensor (engine speed sub sensor).

**<Description of malfunction>**

- Pulses from the camshaft position sensor (engine speed sub sensor) cannot be sensed.

**2. DTC set condition**

(1) Check conditions

- Starter switch ON.
- Battery voltage is in the range of 10 V to 16 V.
- Engine speed of 0 r/min or more

(2) Judgment criteria

- With the engine running, the camshaft position sensor (engine speed sub sensor) does not detect pulses for continuous 0.8 seconds or longer. (at 750 r/min)

**3. Reset condition**

- After restoration to normal condition.

**4. Indication, warning or system control regulation when the DTC is set.**

- MIL: ON
- SVS light: OFF
- Idling stop system is not available.

**5. Symptoms on the vehicle when the DTC is set**

**<Symptoms on the vehicle due to backup control (fail safe function)>**

- Idling stop system does not work.

**<Symptoms on the vehicle due to malfunction>**

- –

**6. Pre-inspection work**

- Check that the battery voltage is in the normal range.

**7. After-inspection work**

- Clear all past DTCs.
- Check that no DTC is stored after test drive.

**8. Estimated failure factors**

- Abnormal resistance of sensor
- Loose/disconnected sensor or failure in sensing area (contamination, clogging or breakage)
- Irregular contact (disconnection or poor fit of connector)
- Harness disconnection or short-circuit

## INSPECTION PROCEDURE: P0340

| 1 | Inspect the camshaft position sensor (engine speed sub sensor) connector |
|---|---|

1. Check the connection of the camshaft position sensor (engine speed sub sensor) connector (Looseness and poor contact).

**Was any failure found?**

**YES**

**Connect securely, repair if needed.**
**Perform "After-inspection work" of INFORMATION section.**

**NO**

**Go to step 2.**

| 2 | Inspect the camshaft position sensor (engine speed sub sensor) |
|---|---|

1. Check the installation of the camshaft position sensor (engine speed sub sensor).
2. Make sure there is no dirt or damage to the camshaft position sensor (engine speed sub sensor).

**Was any failure found?**

**YES**

**Clean the camshaft position sensor (engine speed sub sensor) and install it properly.**
**If damaged, replace the camshaft position sensor (engine speed sub sensor).**
**Perform "After-inspection work" of INFORMATION section.**

**NO**

**Go to step 3.**

## 3 Inspect the sensor power supply 1

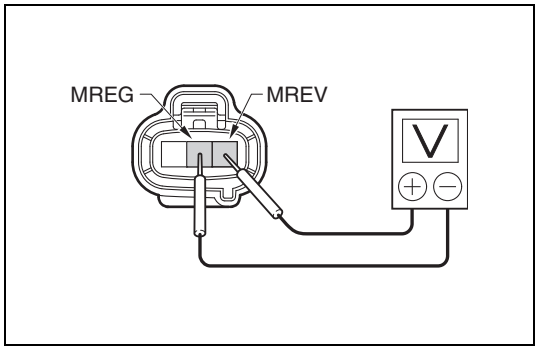


SAPH16F010300404

1. Disconnect the camshaft position sensor (engine speed sub sensor) connector.
2. Set the starter switch to the "ON" position.
3. Use the electrical tester to measure the voltage between the terminals of the camshaft position sensor (engine speed sub sensor) vehicle-side connector.

| Measurement conditions | Tester connections | Standard values |
|---|---|---|
| **Starter switch: ON** | **Camshaft position sensor (engine speed sub sensor) vehicle-side connector MREV – MREG** | **4.5 – 5.5 V** |

**Do the measurements meet the standard value?**

**YES**

**Go to step 5.**

**NO**

**Go to step 4.**

## 4 Inspect the sensor power supply 2

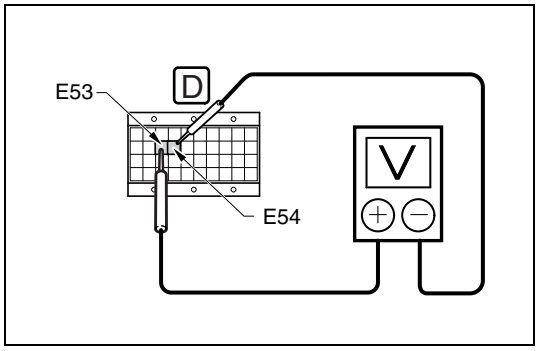


SAPH16F010300405

1. Set the starter switch to the "LOCK" position.
2. Connect the signal check harness to the engine ECU.
3. Connect the camshaft position sensor (engine speed sub sensor) connector.
4. Set the starter switch to the "ON" position.
5. Use the electrical tester to measure the voltage between the terminals of the engine ECU (signal check harness).

| Measurement conditions | Tester connections | Standard values |
|---|---|---|
| **Starter switch: ON** | **Engine ECU (signal check harness) GGND(E54) – GVCC(E53)** | **4.5 – 5.5 V** |

**Do the measurements meet the standard value?**

YES

**Repair or replace the harness.**
**Perform "After-inspection work" of INFORMATION section.**

NO

**Replace the engine ECU.**
**Perform "After-inspection work" of INFORMATION section.**

| 5 | **Check the DTC detected (Engine ECU) [HINO DX II ]** |
|---|---|

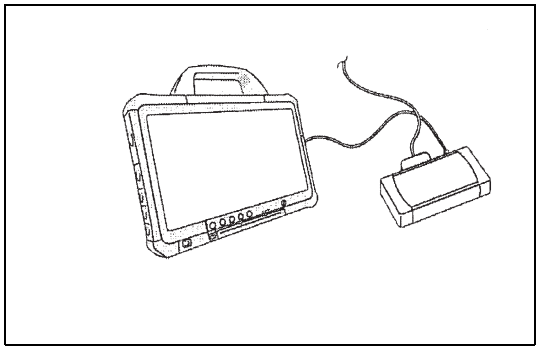

SAPH16F010300406

1. Set the starter switch to the "LOCK" position.
2. Connect the vehicle to HINO DX II .
3. Set the starter switch to the "ON" position.
4. Select [Engine] and check if P0340 has been detected.

**Has DTC P0340 been detected?**

YES

**Replace the engine ECU.**
**Perform "After-inspection work" of INFORMATION section.**

NO

**Procedure completed.**
**Perform "After-inspection work" of INFORMATION section.**

# DTC: P0341

EN01H16F01030F03001067

## P0341: Camshaft position sensor - rationality

INFORMATION

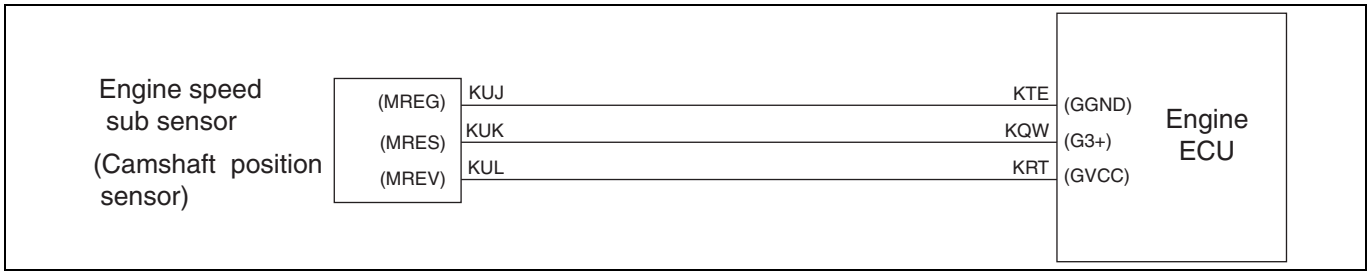


SAPH16F010300407

**1. Technical description**

- The camshaft position sensor (engine speed sub sensor) consistently measures pulses from the camshaft position sensor (engine speed sub sensor).

**<Description of malfunction>**

- Pulses from the camshaft position sensor (engine speed sub sensor) cannot be correctly sensed.

**2. DTC set condition**

(1) Check conditions

- Starter switch ON.
- Battery voltage is in the range of 10 V to 16 V.
- Engine speed of 0 r/min or more

(2) Judgment criteria

- Make a judgment when the abnormal number of the camshaft position sensor (engine speed sub sensor) pulses (not 7 pulses) per engine revolution is continuously detected. For example, 100 seconds at 750 r/min

**3. Reset condition**

- After normal operation is restored.

**4. Indication, warning or system control regulation when the DTC is set.**

- MIL: ON
- SVS light: OFF
- Idling stop system is not available.

**5. Symptoms on the vehicle when the DTC is set**

**<Symptoms on the vehicle due to backup control (fail safe function)>**

- Idling stop system does not work.

**<Symptoms on the vehicle due to malfunction>**

- –

**6. Pre-inspection work**

- Check that the battery voltage is in the normal range.

**7. After-inspection work**

- Clear all past DTCs.
- Check that no DTC is stored after test drive.

**8. Estimated failure factors**

- Abnormal resistance of sensor
- Improper pulses
- Sensor is disconnected from measuring site or sensing unit is malfunctioning (due to adhesion of dirt, damage, etc.)
- Irregular contact (disconnection or poor fit of connector)
- Harness disconnection or short-circuit

## INSPECTION PROCEDURE: P0341

| 1 | Inspect the camshaft position sensor (engine speed sub sensor) connector |
|---|---|

1. Check the connection of the camshaft position sensor (engine speed sub sensor) connector (Looseness and poor contact).

**Was any failure found?**

**YES**

**Connect securely, repair if needed.**
**Perform "After-inspection work" of INFORMATION section.**

**NO**

**Go to step 2.**

| 2 | Inspect the camshaft position sensor (engine speed sub sensor) |
|---|---|

1. Check the installation of the camshaft position sensor (engine speed sub sensor).
2. Make sure there is no dirt or damage to the camshaft position sensor (engine speed sub sensor).

**Was any failure found?**

**YES**

**Clean the camshaft position sensor (engine speed sub sensor) and install it properly.**
**If damaged, replace the camshaft position sensor (engine speed sub sensor).**
**Perform "After-inspection work" of INFORMATION section.**

**NO**

**Go to step 3.**

## 3 Inspect for short-circuit of the camshaft position sensor (engine speed sub sensor) harness

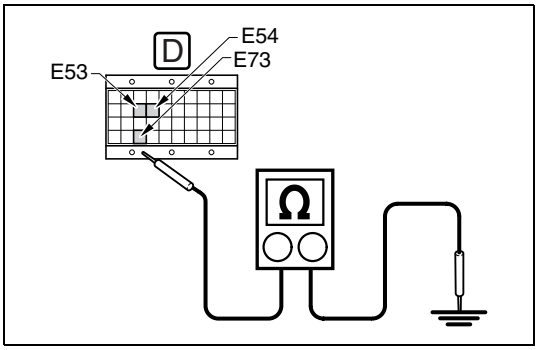


SAPH16F010300408

1. Set the starter switch to the "LOCK" position.
2. Connect the signal check harness to the engine ECU vehicle-side harness. (Do not connect the harness to the ECU.)
3. Disconnect the camshaft position sensor (engine speed sub sensor) connector.
4. Use the electrical tester to measure the resistance between the terminals of the engine ECU (signal check harness) and ground.

| Measurement conditions | Tester connections | Standard values |
|---|---|---|
| **Starter switch: LOCK** | **Engine ECU (signal check harness) GVCC(E53) – Ground GGND(E54) – Ground G3+(E73) – Ground** | **∞ Ω** |

**Do the measurements meet the standard value?**

**YES**

**Go to step 4.**

**NO**

**Repair or replace the harness. Perform "After-inspection work" of INFORMATION section.**

## 4 Inspect disconnection of the camshaft position sensor (engine speed sub sensor) harness

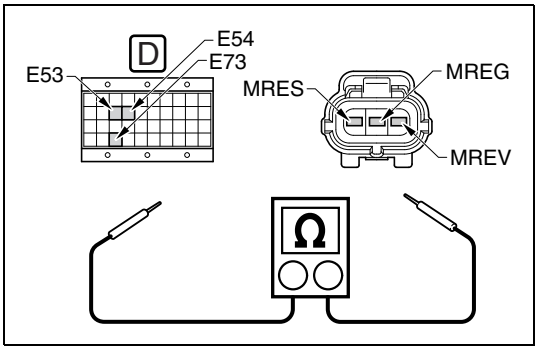


SAPH16F010300409

1. Use the electrical tester to measure the resistance between the terminals of the engine ECU (signal check harness) and camshaft position sensor (engine speed sub sensor) vehicle-side connector.

| Measurement conditions | Tester connections | Standard values |
|---|---|---|
| **Starter switch: LOCK** | **Camshaft position sensor (engine speed sub sensor) vehicle-side connector – Engine ECU (signal check harness) GVCC(E53) – MREV GGND(E54) – MREG G3+(E73) – MRES** | **Less than 2 Ω** |

**Do the measurements meet the standard value?**

| YES | NO |
|---|---|
| **Go to step 5.** | **Repair or replace the harness. Perform "After-inspection work" of INFORMATION section.** |

## 5 Inspect the crankshaft position sensor (engine speed main sensor) power supply

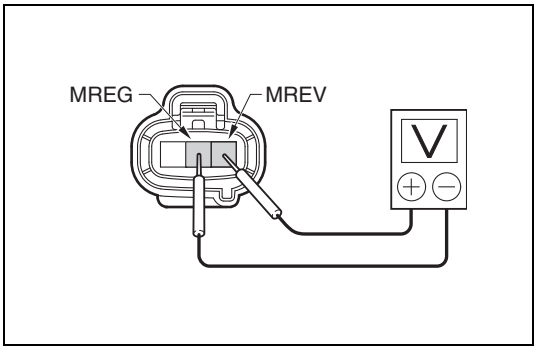

SAPH16F010300410

1. Set the starter switch to the "LOCK" position.
2. Connect the signal check harness to the engine ECU.
3. Set the starter switch to the "ON" position.
4. Use the electrical tester to measure the voltage between the terminals of the camshaft position sensor (engine speed sub sensor) vehicle-side connector.

| Measurement conditions | Tester connections | Standard values |
|---|---|---|
| **Starter switch: ON** | **Camshaft position sensor (engine speed sub sensor) vehicle-side connector MREV – MREG** | **4.5 – 5.5 V** |

**Do the measurements meet the standard value?**

| YES | NO |
|---|---|
| **Go to step 6.** | **Replace the engine ECU. Perform "After-inspection work" of INFORMATION section.** |

| 6 | Inspect the camshaft position sensor (engine speed sub sensor) signal |
|---|---|

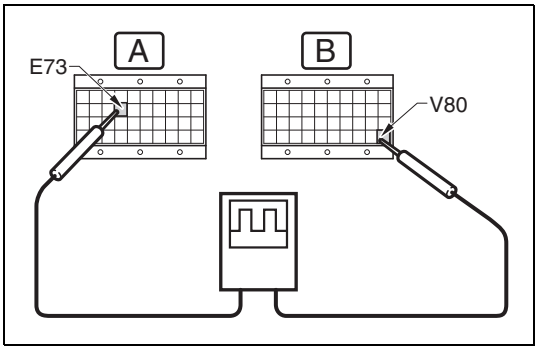


SAPH16F010300411

1. Connect the camshaft position sensor (engine speed sub sensor) connector.
2. Start the engine.
3. Use the oscilloscope to measure the signal voltage between the terminals in the engine ECU (signal check harness).

| Measurement conditions | Tester connections | Standard values |
|---|---|---|
| With engine idling | Engine ECU (signal check harness) G3+(E73) – PGD4(V80) | 7 pulses |

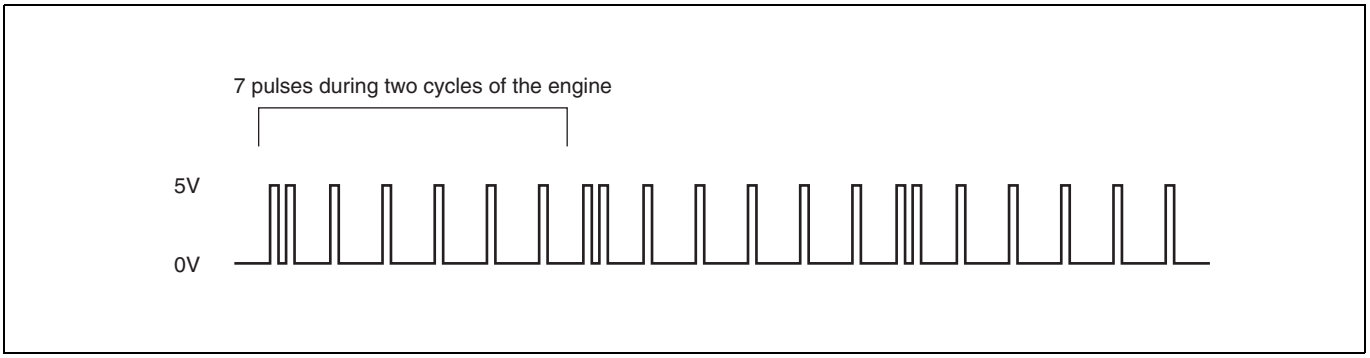


SAPH16F010300412

**Do the measurements meet the standard value?**

**YES**

**Go to step 7.**

**NO**

**Replace the camshaft position sensor (engine speed sub sensor).**
**Perform "After-inspection work" of INFORMATION section.**

| 7 | Check the DTC detected (Engine ECU) [HINO DX ll ] |
|---|---|

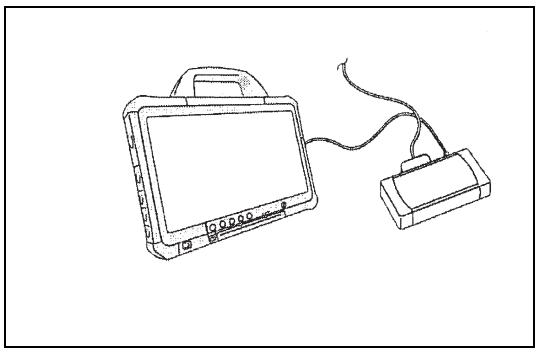

SAPH16F010300413

1. Perform engine warm-up. (engine coolant temperature: 60 °C {140 °F} or more)
2. Stop the engine and set the starter switch to the "LOCK" position.
3. Connect the vehicle to HINO DX II .
4. Set the starter switch to the "ON" position.
5. Select [Engine] and check if P0341 has been detected.

**Has DTC P0341 been detected?**

**YES**

**Replace the engine ECU.**
**Perform "After-inspection work" of INFORMATION section.**

**NO**

**Procedure completed.**
**Perform "After-inspection work" of INFORMATION section.**

# DTC: P0381

EN01H16F01030F03001068

## P0381: Glow lamp (wait-to-start lamp) - circuit

INFORMATION

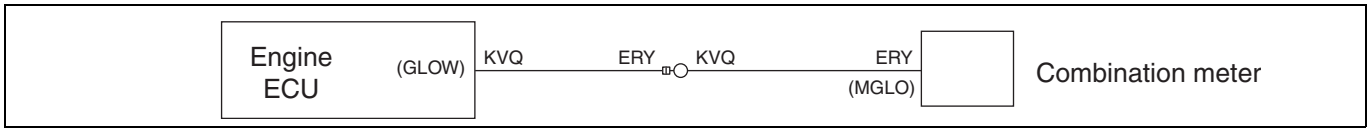


SAPH16F010300414

**1. Technical description**

- The light will light up when the glow lamp is in drive status or light out when it is in non-drive status.

**<Description of malfunction>**

- Disconnection, +B short-circuit or GND short-circuit is likely to have occurred in the glow light circuit.

**2. DTC set condition**

(1) Check conditions

**<Glow light in non-drive status>**

- Glow light in non-drive status
- Starter switch ON and starter switch OFF.
- Battery voltage is in the range of 10 V to 16 V.

The conditions described above remain for 5 seconds or longer.

**<Glow light in drive status>**

- Glow light in drive status
- Starter switch ON and starter switch OFF.
- Battery voltage is in the range of 10 V to 16 V.

The conditions described above remain for 5 seconds or longer.

(2) Judgment criteria

**<Glow light in non-drive status>**

- Voltage of the glow light circuit remains at 7 V or lower for 10 seconds or longer.

**<Glow light in drive status>**

- Voltage of the glow light circuit remains at 8.4 V or higher for 3 seconds or longer.

**3. Reset condition**

- After normal operation is restored.

**4. Indication, warning or system control regulation when the DTC is set.**

- MIL: ON
- SVS light: OFF

**5. Symptoms on the vehicle when the DTC is set**

**<Symptoms on the vehicle due to backup control (fail safe function)>**

- –

**<Symptoms on the vehicle due to malfunction>**

- Glow light fails to operate.

**6. Pre-inspection work**

- Check that the battery voltage is in the normal range.

**7. After-inspection work**

- Clear all past DTCs.
- Check that no DTC is stored after test drive.

**8. Estimated failure factors**

- Failure of glow light (in combination meter)
- Disconnection or short-circuit in sensor harness
- Irregular contact (disconnection or poor fit of connector)
- GND short-circuit in engine ECU internal power supply

## INSPECTION PROCEDURE: P0381

| 1 | Inspect the combination meter connector |
|---|---|

1. Check the connection of the combination meter connector (Looseness and poor contact).

**Was any failure found?**

**YES**

**Connect securely, repair if needed.**
**Perform "After-inspection work" of INFORMATION section.**

**NO**

**Go to step 2.**

| 2 | Check the combination meter operation |
|---|---|

1. Set the starter switch to the "ON" position.
2. Check the operation of the combination meter (various instruments and displays).

**Was any failure found?**

**YES**

**Inspect the combination meter.**
**Perform "After-inspection work" of INFORMATION section.**

**NO**

**Go to step 3.**

## 3 Check the glow light circuit

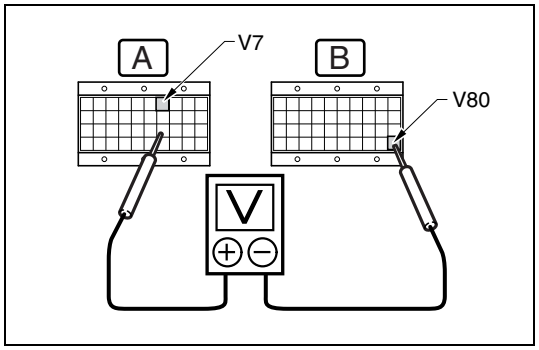


SAPH16F010300415

1. Set the starter switch to the "LOCK" position.
2. Connect the signal check harness to the engine ECU.
3. Use the electrical tester to measure the voltage between the terminals of the engine ECU (signal check harness).

| Measurement conditions | Tester connections | Standard values |
|---|---|---|
| Starter switch: ON/LOCK | Engine ECU (signal check harness) GLOW(V7) – PGD4(V80) | Starter switch ON: 10 V or more Starter switch LOCK: Less than 7 V |

**Do the measurements meet the standard value?**

**YES**

**Go to step 6.**

**NO**

**Go to step 4.**

## 4 Check for short-circuit in wire harness of glow light

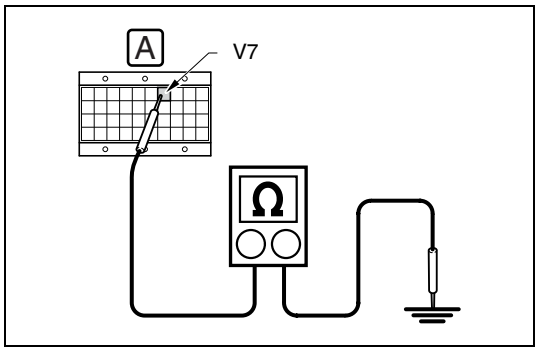


SAPH16F010300416

1. Set the starter switch to the "LOCK" position.
2. Disconnect the signal check harness from the engine ECU. (Leave the vehicle-side engine ECU connector connected.)
3. Disconnect the combination meter 24P connector.
4. Use the electrical tester to measure the resistance between the GLOW (V7) terminal in the engine ECU (signal check harness) and ground.

| Measurement conditions | Tester connections | Standard values |
|---|---|---|
| Starter switch: LOCK | Engine ECU (signal check harness) GLOW(V7) – Ground | ∞ Ω |

**Do the measurements meet the standard value?**

**YES**

**Go to step 5.**

**NO**

**Repair or replace the harness.**
**Perform "After-inspection work" of INFORMATION section.**

## 5 Check for disconnection in glow light wire harness

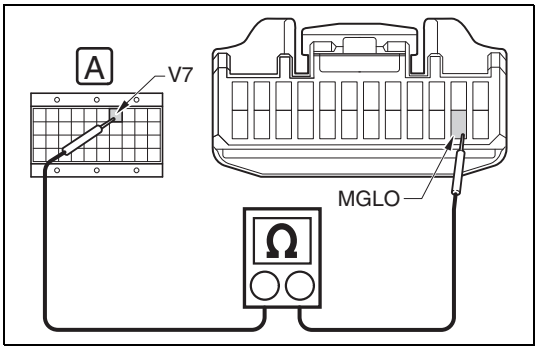


SAPH16F010300417

1. Use the electrical tester to measure the resistance between the engine ECU (signal check harness) and the combination meter 24P vehicle-side connector terminals.

| Measurement conditions | Tester connections | Standard values |
|---|---|---|
| **Starter switch: LOCK** | **Engine ECU (signal check harness) – combination meter 24P vehicle-side connector GLOW(V7) – MGLO** | **Less than 1 Ω** |

**Do the measurements meet the standard value?**

**YES**

**Replace the combination meter.**
**Perform "After-inspection work" of INFORMATION section.**

**NO**

**Repair or replace the harness.**
**Perform "After-inspection work" of INFORMATION section.**

## 6 Check the DTC detected (Engine ECU) [HINO DX II ]

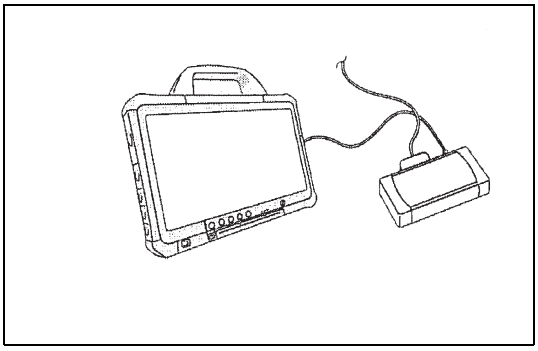

SAPH16F010300418

1. Perform engine warm-up. (engine coolant temperature: 60 °C {140 °F} or more)
2. Stop the engine and set the starter switch to the "LOCK" position.
3. Connect the vehicle to HINO DX II .
4. Set the starter switch to the "ON" position.
5. Select [Engine] and check if P0381 has been detected.

**Has DTC P0381 been detected?**

**YES**

**Replace the engine ECU.**
**Perform "After-inspection work" of INFORMATION section.**

**NO**

**Procedure completed.**
**Perform "After-inspection work" of INFORMATION section.**

# DTC: P0401

EN01H16F01030F03001069

## P0401: EGR low flow

INFORMATION

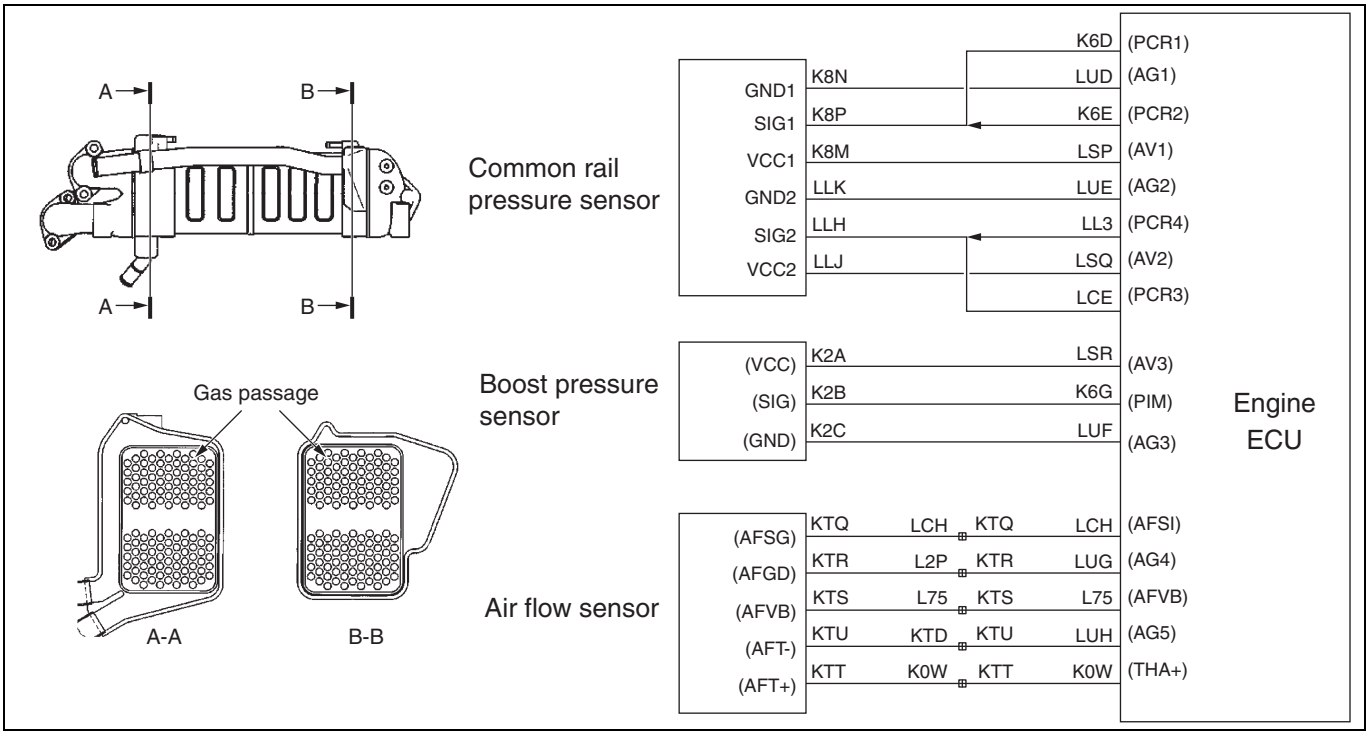


SAPH16F010300419

**1. Technical description**

- The measured EGR rate, which is calculated from the air flow sensor, boost pressure sensor, and intake air temperature sensor (intake manifold), is compared with the predicted EGR rate, and malfunction is detected.

**<Description of malfunction>**

- –

**2. DTC set condition**

(1) DTC detection condition

- Either the fuel injection quantity is 15 - 100 $mm^3$/st. cyl. with an engine speed of 2,000 – 2,250 r/min, or the quantity is 30 - 90 $mm^3$/st. cyl. with an engine speed of 2,250 – 2,500 r/min.
- Engine speed fluctuation ≤ 117 r/min/sec.
- Fuel injection quantity fluctuation ≤ 53 $mm^3$/st. cyl. sec.
- Predicted EGR flow quantity ≥ 40 g/sec.
- Atmospheric pressure ≥ 75 kPa {10.8 psi}.

(2) Judgment criteria

- The value of parameters calculated from the measured EGR rate, predicted EGR rate, and EGR valve feedback quantity is at least 0.2.

**3. Reset condition**

- After normal operation is restored and the starter switch is turned OFF.

**4. Indication, warning or system control regulation when the DTC is set.**

- MIL: ON
- SVS light: OFF
- Engine output is restricted.

**5. Symptoms on the vehicle when the DTC is set**

**<Symptoms on the vehicle due to backup control (fail safe function)>**

- Engine output is insufficient.

**<Symptoms on the vehicle due to malfunction>**

- Turbocharger noise or damage
- Abnormal consumption of DEF solution

**6. Pre-inspection work**

- Check that the battery voltage is in the normal range.

**7. After-inspection work**

- Clear all past DTCs.
- Check that no DTC is stored after test drive.

**8. Estimated failure factors**

- Obstruction due to buildup of soot or foreign substances in inlet/outlet of EGR cooler gas passageway
- Obstruction due to buildup of soot or foreign substances in EGR valve.
- Malfunction of intake system
- Air flow sensor failure
- Boost pressure sensor failure
- Intake air temperature sensor (intake manifold) failure
- SCV failure
- Injector failure

## INSPECTION PROCEDURE: P0401

| 1 | Inspect the air cleaner element |
|---|---|

1. Check the air cleaner element for dirt, clogging, or damage.
2. Make sure the element is a Hino genuine part.

**Was any failure found?**

**YES**

**Clean or replace the air cleaner element. Perform "After-inspection work" of INFORMATION section.**

**NO**

**Go to step 2.**

| 2 | Inspect the air flow sensor |
|---|---|

1. Check the installation of the air flow sensor.
2. Make sure there is no dirt or damage to the air flow sensor.

**Was any failure found?**

**YES**

**If damaged, replace the air flow sensor. Perform "After-inspection work" of INFORMATION section.**

**NO**

**Go to step 3.**

| 3 | Inspect the boost pressure sensor |
|---|---|

1. Check the installation of the boost pressure sensor.
2. Make sure there is no dirt or damage to the boost pressure sensor.

**Was any failure found?**

**YES**

**Clean the boost pressure sensor and install it properly.**
**If damaged, replace the boost pressure sensor.**
**Perform "After-inspection work" of INFORMATION section.**

**NO**

**Go to step 4.**

| 4 | Check the boost pressure sensor output signal [HINO DX II ] |
|---|---|

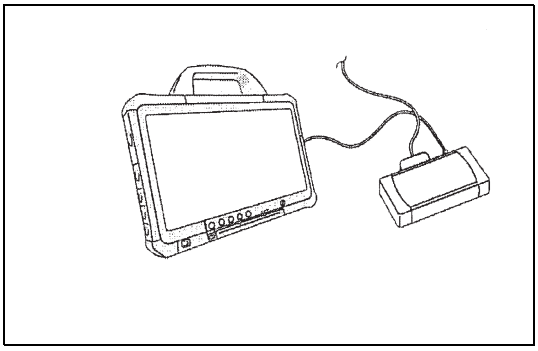

SAPH16F010300420

1. Set the starter switch to the "LOCK" position.
2. Connect the vehicle to HINO DX II .
3. Start the engine.
4. Select [Engine] from the menu.
5. Select [Actual boost pressure] from the [Data monitor Setting] menu.
6. Race the engine from idle to NMR and verify that the boost pressure output signal varies.

| Standard values |
|---|
| **There is no abnormal change in the sensor output signal. (The pressure sensor signal response changes according to the engine speed)** |

**Was there no abnormal change in the sensor output signal?**

**YES**

**Go to step 5.**

**NO**

**Replace the boost pressure sensor.**
**Perform "After-inspection work" of INFORMATION section.**

| 5 | Inspect the intake air temperature sensor (intake manifold) |
|---|---|

1. Check the installation of the intake air temperature sensor (intake manifold).
2. Make sure there is no dirt or damage to the intake air temperature sensor (intake manifold).

**Was any failure found?**

**YES**

**Clean the intake air temperature sensor (intake manifold) and install it properly.**
**If damaged, replace the intake air temperature sensor (intake manifold).**
**Perform "After-inspection work" of INFORMATION section.**

**NO**

**Go to step 6.**

| 6 | Inspect the intake air temperature sensor (intake manifold) unit |
|---|---|

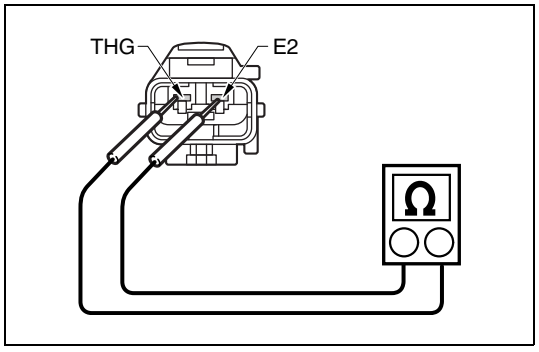

SAPH16F010300421

1. Set the starter switch to the "LOCK" position.
2. Disconnect the intake air temperature sensor (intake manifold) connector.
3. Use the electrical tester to measure the resistance between the terminals of the intake air temperature sensor (intake manifold).

| Measurement conditions | Tester connections | Standard values |
|---|---|---|
| Starter switch: LOCK | Intake air temperature sensor (intake manifold) THG – E2 | 20 °C {68 °F}: 7.336 – 5.794 kΩ 50 °C {122 °F}: 2.435 – 1.994 kΩ |

**Do the measurements meet the standard value?**

**YES**

**Go to step 7.**

**NO**

**Replace the intake air temperature sensor (intake manifold).**
**Perform "After-inspection work" of INFORMATION section.**

| 7 | Inspect the response delay of the EGR valve [HINO DX II ] |
|---|---|

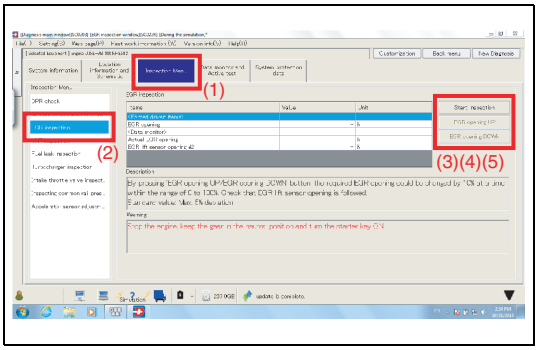


SAPH16F010300422

1. Select [Inspection Menu] and then [EGR inspection] from the menu, then inspect the response delay at the Target EGR position and Actual EGR position.

**⚠ CAUTION**
**Perform the inspection while the engine is stopped to avoid damages.**

<Inspection procedure>
(1) Select [Inspection Menu].
(2) Select [EGR inspection].
(3) Click [Start inspection].
(4) Click [EGR opening UP]:
• Inspect the response delay at each step of the Target EGR position and Actual EGR position from 0 to 100 %.
(5) Click [EGR opening DOWN]:
• Inspect the response delay at each step of the Target EGR position and Actual EGR position from 100 to 0 %.

**HINT**
**The EGR opening position changes of around 10 % per step between 0 – 100 %.**

| Standard values |
|---|
| **From the Target EGR position to the Actual EGR position, the response delay should be within 5 seconds.** |

**Do the measurements meet the standard value?**

| YES | NO |
|---|---|
| **Go to step 8.** | **Replace the EGR valve.<br>Perform "After-inspection work" of INFORMATION section.** |

| 8 | Inspect the EGR cooler |
|---|---|

1. Check if soot is obstructing the inlet/outlet of the EGR cooler gas passageway.
2. Check if there are foreign substances stuck to the EGR cooler coolant passageway.
3. Check the EGR cooler coolant passageway for obstruction due to deformation or other damage.
4. Check if coolant is leaking from the EGR cooler.

**Was any failure found?**

**YES**

**Remove the soot in the inlet/outlet of the gas passageway, or repair or replace the faulty part.**
**Perform "After-inspection work" of INFORMATION section.**

**NO**

**Go to step 9.**

| 9 | **Inspect the EGR valve** |
|---|---|

1. Check the EGR valve for damage due to incursion of foreign substances.
2. Check if the inlet/outlet of the exhaust gas passageway is obstructed by soot.

**Was any failure found?**

**YES**

**Remove foreign substances and clean the passageway.**
**Replace the EGR valve if it is damaged.**
**Perform "After-inspection work" of INFORMATION section.**

**NO**

**Go to step 10.**

| 10 | **Inspect the SCV** |
|---|---|

1. Perform an SCV test and a malfunction reproduction test.

- For a detailed procedure, refer to the separate "SCV free acceleration test" in the following pages.

**Was any failure found?**

**YES**

**Repair or replace the faulty part.**
**Perform "After-inspection work" of INFORMATION section.**

**NO**

**Go to step 11.**

| 11 | Inspect the injector [HINO DX II ] |
|---|---|

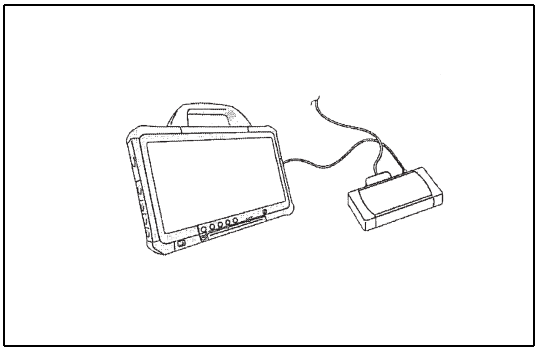

SAPH16F010300423

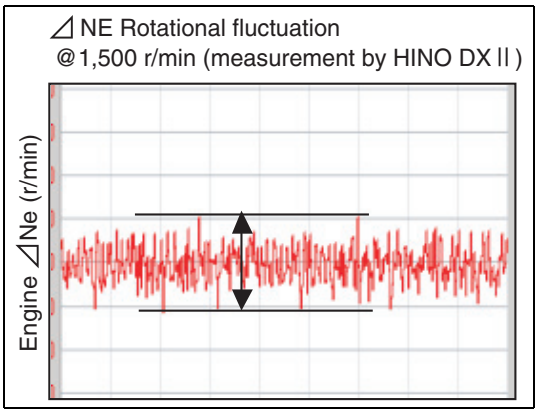


SAPH16F010300424

Check the injection quantity and the rotational fluctuation.

1. Start the engine.
2. Select [Injection quantity] from [Data monitor Setting] on HINO DX II menu and measure the fuel injection quantity.
3. Select [Engine speed] from [Data monitor Setting] on HINO DX II menu and measure the engine speed fluctuation.

| Measurement conditions |
|---|
| **Engine speed: 1,500 r/min**<br>**No-load, Neutral, A/C off and Air compressor un-operating**<br>**Engine coolant temperature: more than 80 °C {176 °F}** |

**Standard values**

| Type of | Q ($mm^3$/st) | ⊿Ne (r/min) |
|---|---|---|
| MT | 5.0q ≤ | ≤ 26 |
| Allison® 2200 | 6.0q ≤ | |
| Allison® 2500 | | |
| Allison® 3500 | | |

**Do the measurements meet the standard values? (Are both injection quantity and engine speed fluctuation within the standard values?)**

**YES**

**Go to step 12.**

**NO**

**Replace the injector.**
**Perform "After-inspection work" of INFORMATION section.**

| 12 | Check the DTC detected (Engine ECU) [HINO DX ll ] |
|---|---|

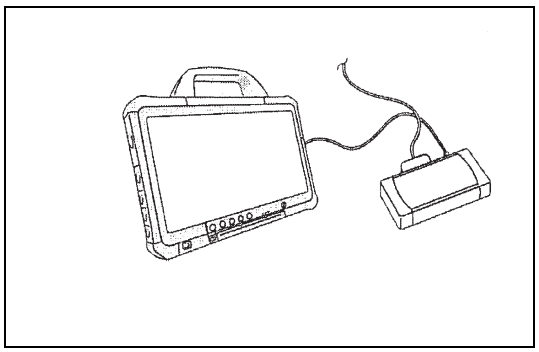

SAPH16F010300426

1. Perform engine warm-up. (engine coolant temperature: 60 °C {140 °F} or more)
2. Stop the engine.
3. Set the starter switch to the "ON" position.
4. Select [Engine] and check if P0401 has been detected.

**Has DTC P0401 been detected?**

**YES**

**Replace the engine ECU.**
**Perform "After-inspection work" of INFORMATION section.**

**NO**

**Procedure completed.**
**Perform "After-inspection work" of INFORMATION section.**

## SCV FREE ACCELERATION TEST

| 1 | Test method |
|---|---|

**<Engine speed pattern>**

1. After engine has reached operating temperature (more than 82 °C {179.6 °F}).
2. After air compressor completed building pressure.
3. A/C, Head lights off.
4. All devices off. (PTO, Refrigeration compressor. etc)
5. Control the engine revolution by means of operating Cruise Control system.

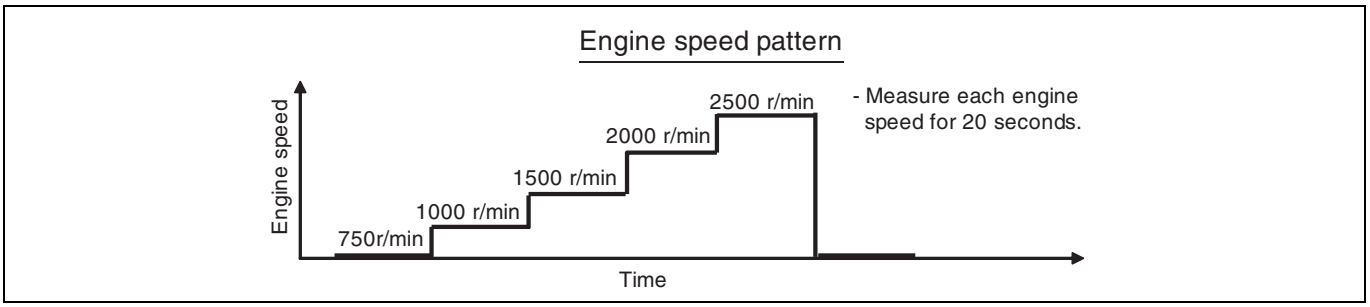


SAPH16F010300427

**<Acceleration pattern>**

1. After engine has reached operating temperature (more than 82 °C {179.6 °F}).
2. After air compressor completed building pressure.
3. A/C, Head lights off.
4. All devices off. (PTO, Refrigeration compressor. etc)
5. Check that actual common rail pressure following target.

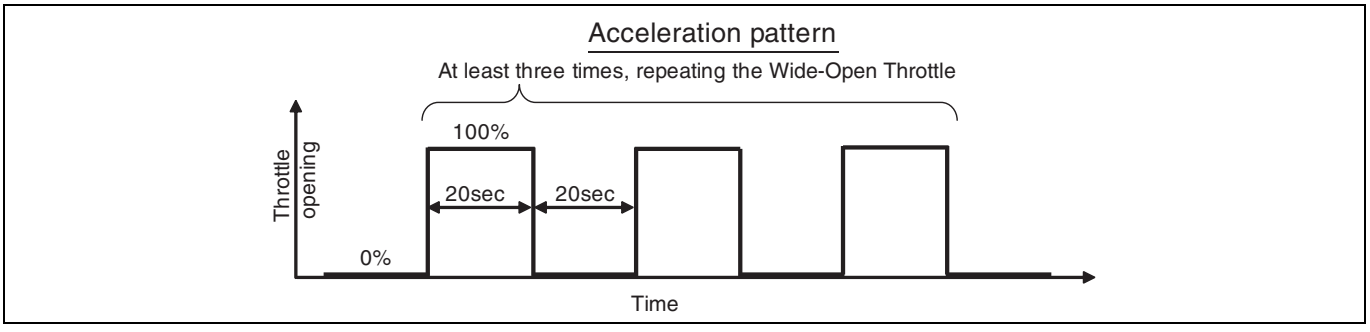


SAPH16F010300428

## 2 Types of HINO DX II data to be measured

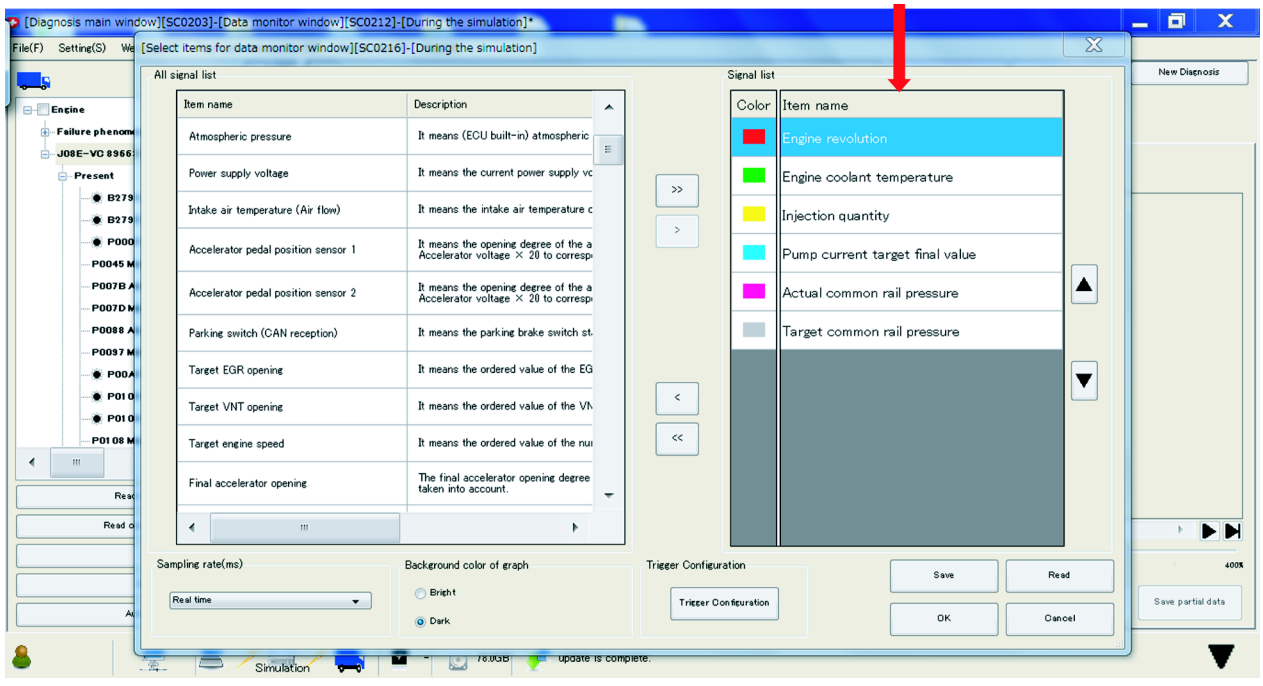


SAPH16F010300429

## 3 If the following symptoms occur, FAIL. If not, OK.

a. Pressure is reduced by 5 MPa or more continually for 5 seconds or more. → Replace the supply pump.

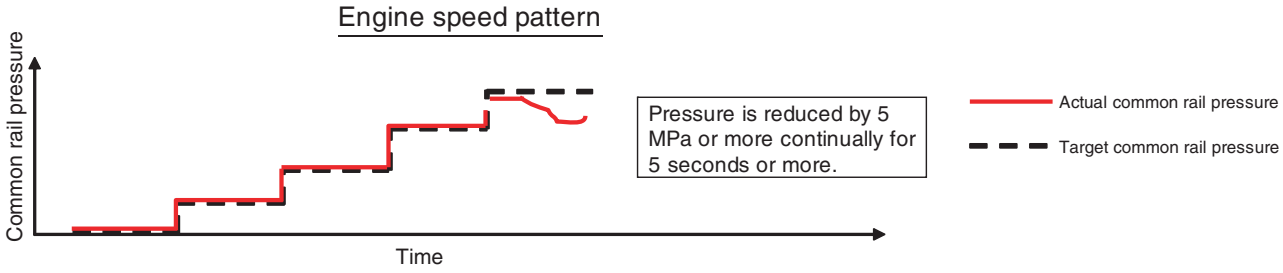


SAPH16F010300430

b. Pressure is increased by 5 MPa or more continually for 5 seconds or more. → Replace the SCV.

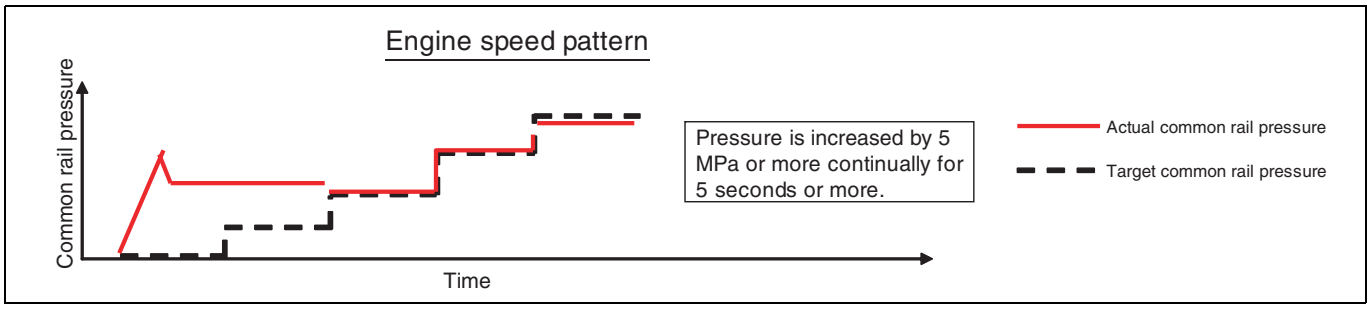


SAPH16F010300431

c. The maximum common rail pressure exceeds 222 MPa for even a moment during pressure increase. → Replace the SCV.

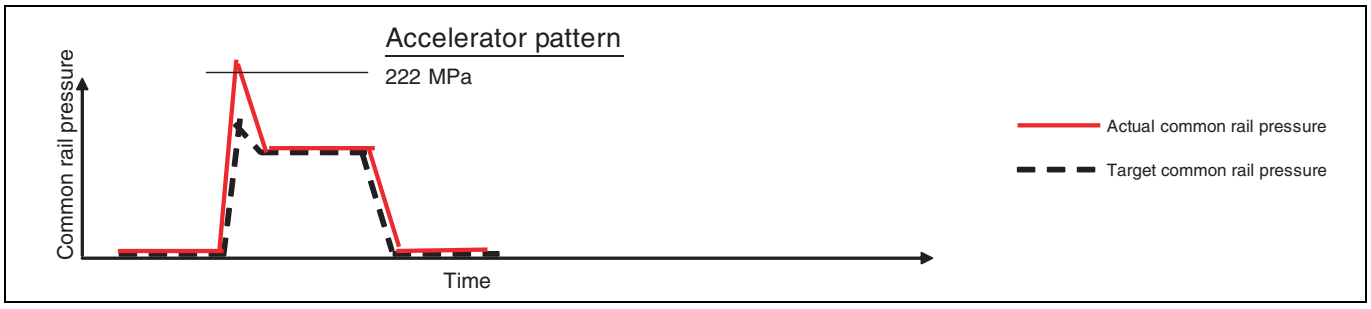


SAPH16F010300432

d. After the maximum common rail pressure exceeds 222 MPa during pressure increase, the actual rail pressure falls below the target rail pressure. → Replace the SCV.

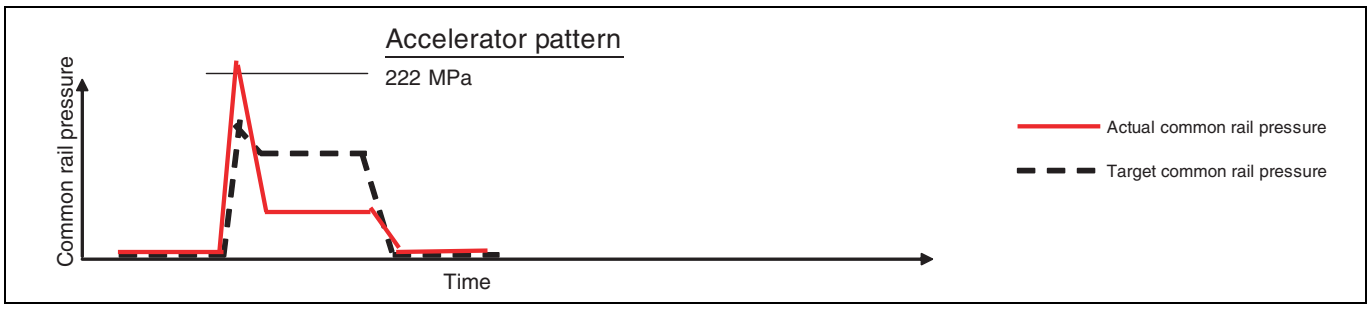


SAPH16F010300433

e. Before the maximum common rail pressure exceeds 222 MPa during pressure increase, the actual rail pressure falls below the target rail pressure rapidly. → Replace the common rail.

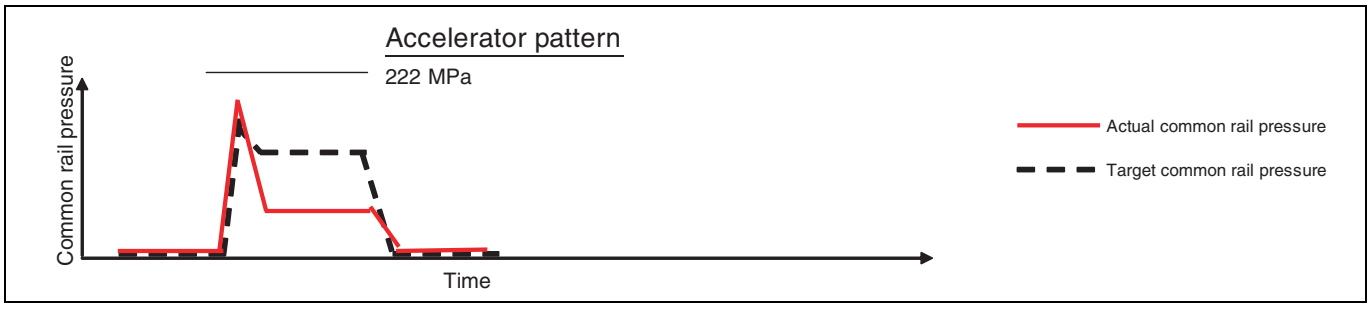


SAPH16F010300434

f. The maximum common rail pressure exceeds 222 MPa during pressure drop. → Check the return pipe.

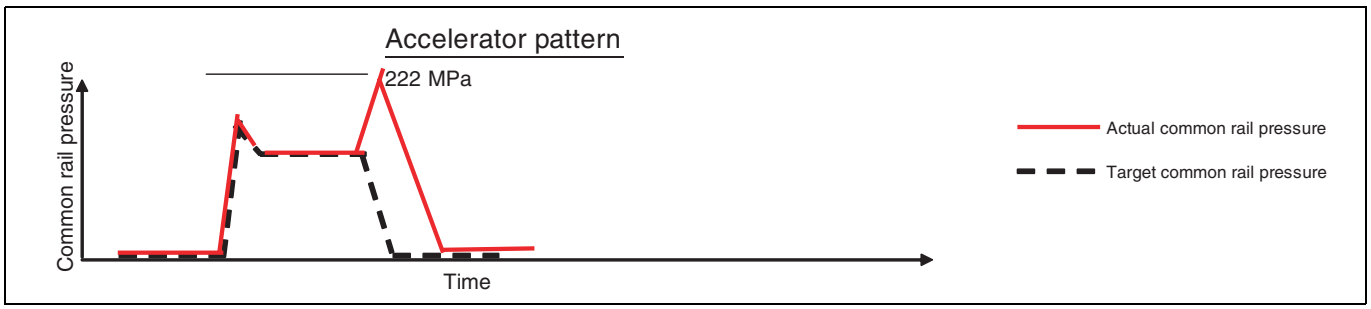


SAPH16F010300435

g. The pressure is disturbed at a given speed and the pressure decreases at higher speed. → Replace the supply pump.

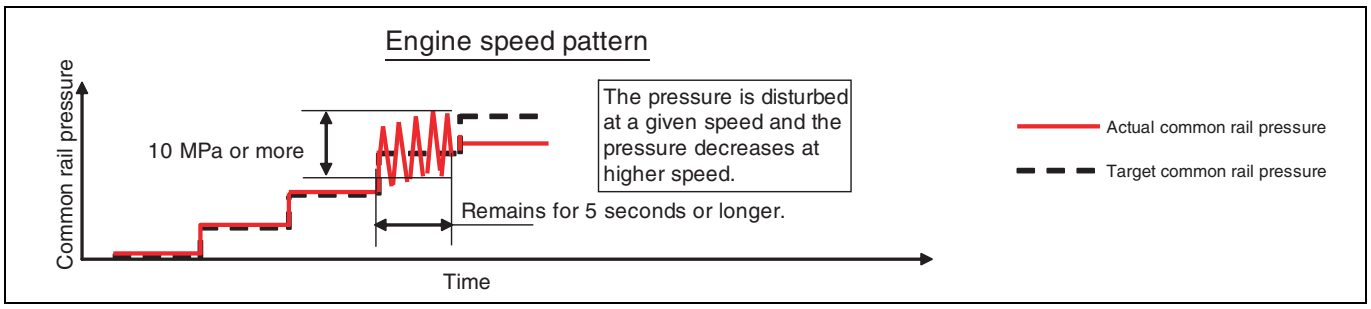


SAPH16F010300436

h. Hunting remains within 10 MPa or more for more than 5 seconds. → Replace the SCV.

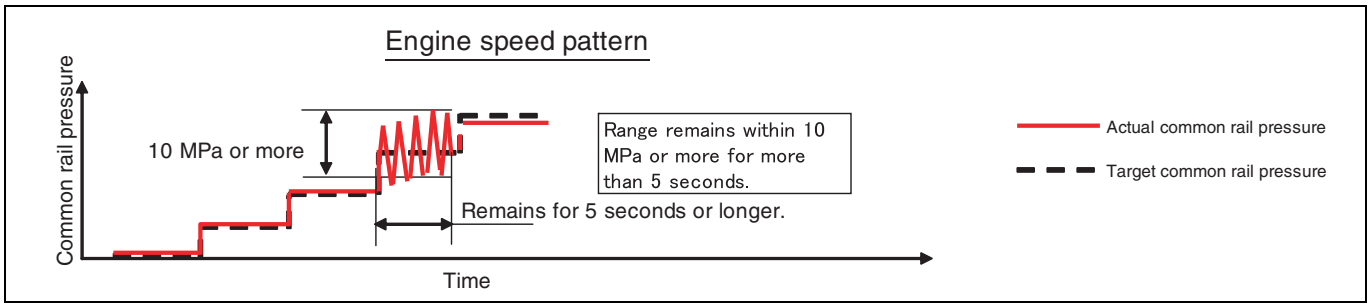


SAPH16F010300437

i. The engine stops during pressure relief. → Replace the SCV.

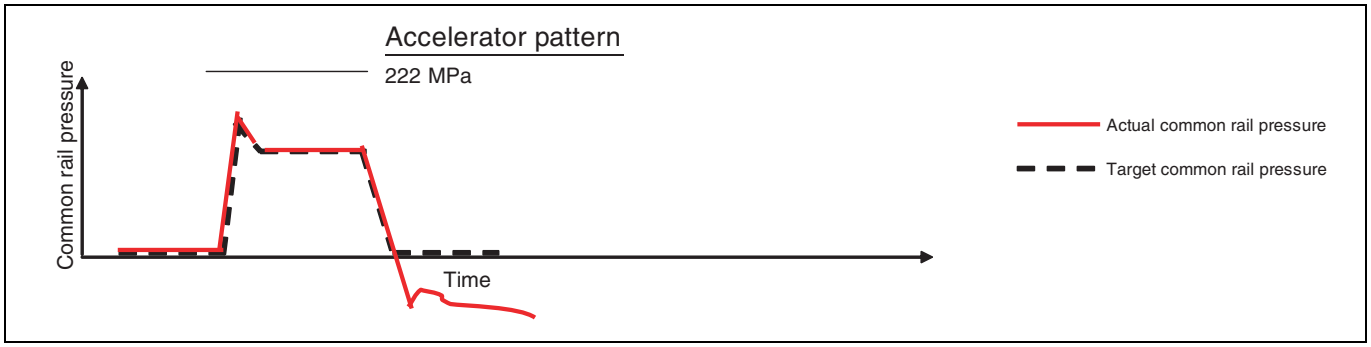


SAPH16F010300438

j. Target common rail pressure during idling deviates from the standard value. → Replace the SCV.

**<FINAL VALUE OF PUMP CURRENT TARGET test>**

1. After engine has reached operating temperature. (more than 82 °C {179.6 °F})
2. After air compressor has completed building pressure.
3. A/C, Head lights are off.
4. All other devices turned off. (PTO, Refrigeration compressor. etc)
5. Engine speed: 750 r/min

| Criteria | | |
|---|---|---|
| FINAL VALUE OF PUMP CURRENT TARGET | Average current value | 1,740 ± 80 mA |
| | Fluctuation in current value | < 80 mA |

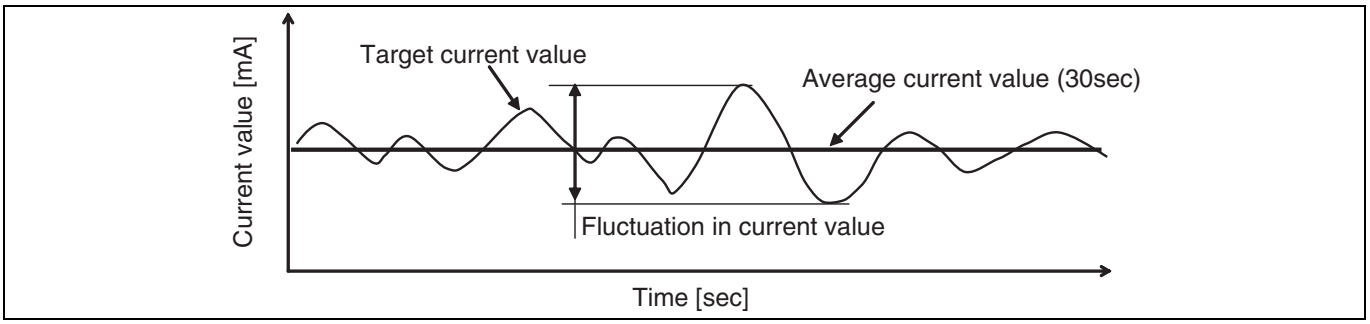


SAPH16F010300439

# DTC: P0402

EN01H16F01030F03001070

## P0402: EGR high flow

INFORMATION

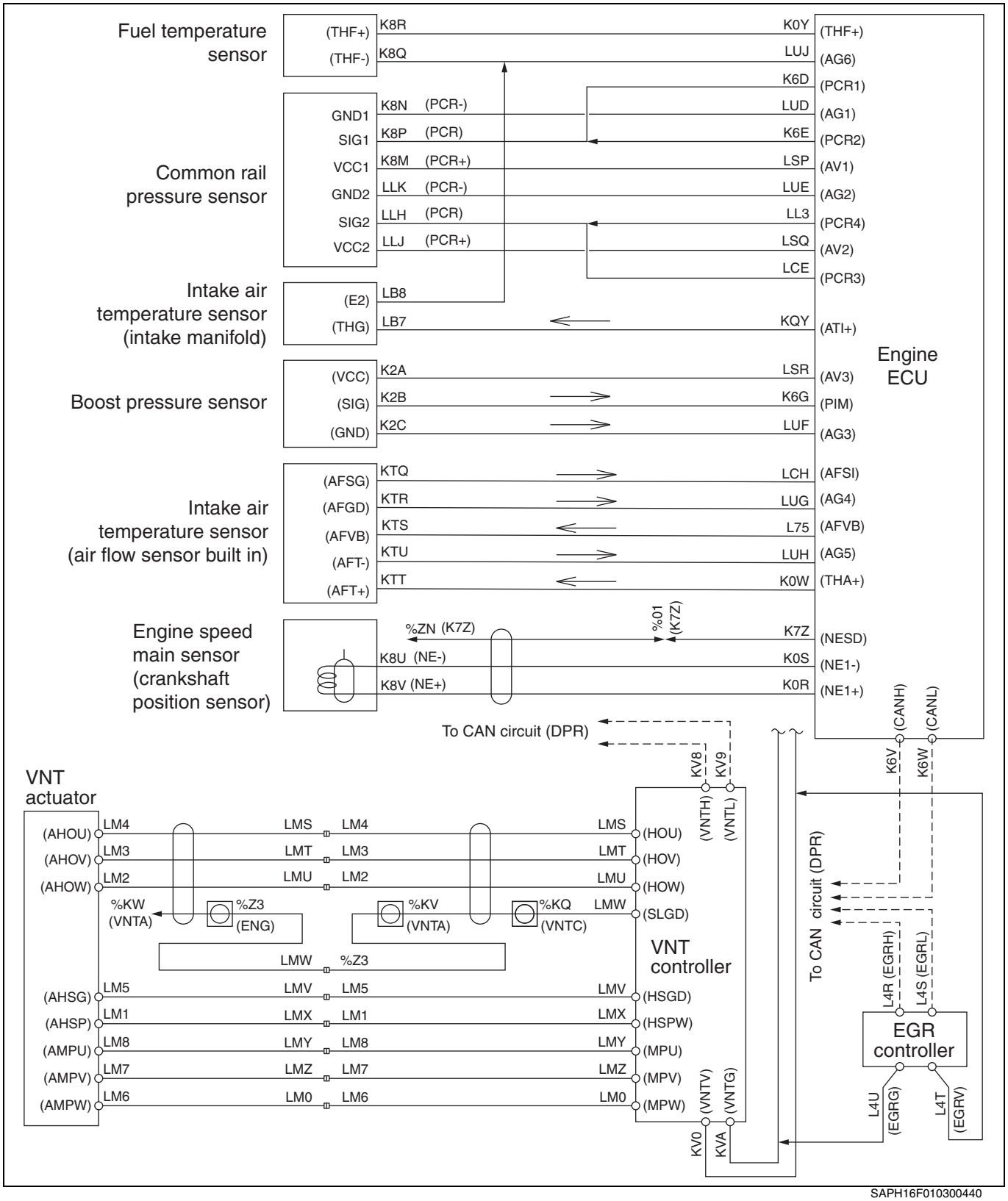


SAPH16F010300440

**1. Technical description**

- EGR valve is a butterfly type.
- EGR valve opening is controlled by engine speed and amount of intake air.
- EGR valve opening is adjusted by engine ECU and CAN communication.
- EGR valve will not operate when coolant temperature is low (≤ 30 °C {86 °F}).
- Engine ECU calculates the actual EGR quantity based on information from the boost pressure sensor, engine speed sensor, intake air temperature sensor (intake manifold), and air flow sensor.
- Engine ECU compares the actual EGR quantity and the theoretical EGR quantity stored in the ECU memory.

**<Description of malfunction>**

- EGR quantity may be over-applied.

**2. DTC set condition**

(1) DTC detection condition

- Battery voltage is in the range of 10 V to 16 V.
- There is no disconnection in harness connected to EGR valve.
- Engine speed ≤ 1,000 r/min and Fuel injection quantity ≤ 15 $mm^3$/st.cyl.
- Engine coolant temperature ≤ 55 °C {131 °F}
- DPF is not in regeneration, and exhaust brake is not active.

(2) Judgment criteria

- When value of theoretical EGR quantity - actual EGR quantity stays above 28 % for at least 20 seconds.
- Above criterion is determined from the boost pressure, intake manifold temperature, air intake quantity, fuel injection rate, and engine speed.

**3. Reset condition**

- After normal operation is restored and the starter switch is turned LOCK.

**4. Indication, warning or system control regulation when the DTC is set.**

- MIL: ON
- SVS light: OFF
- Engine output is restricted.

**5. Symptoms on the vehicle when the DTC is set**

**<Symptoms on the vehicle due to backup control (fail safe function)>**

- EGR valve is fully closed.

**<Symptoms on the vehicle due to malfunction>**

- Faulty engine revving (engine hesitation)
- Insufficient output or engine stall because of DPR clogging due to faulty catalyst regeneration

**6. Pre-inspection work**

- Check that the battery voltage is in the normal range.

**7. After-inspection work**

- Clear all past DTCs.
- Check that no DTC is detected after test drive.

**8. Estimated failure factors**

- Intake air temperature sensor (intake manifold) failure
- Air flow sensor failure
- Boost pressure sensor failure
- Injector failure
- EGR valve failure
- Clogged intake system
- VNT controller failure

## INSPECTION PROCEDURE: P0402

| 1 | Check the response delay of the EGR valve [HINO DX II ] |
|---|---|

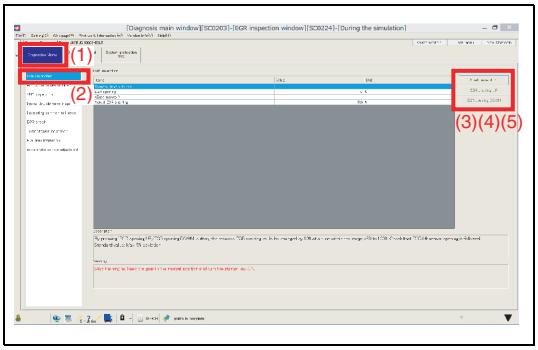


SAPH16F010300441

1. Set the starter switch to the "LOCK" position.
2. Connect the vehicle to HINO DX II .
3. Set the starter switch to the "ON" position.
4. Select [Inspection Menu] and then [EGR inspection] from the menu, then inspect the response delay at the Target EGR position and Actual EGR position.

**⚠ CAUTION**
**Perform the inspection while the engine is stopped to avoid damages.**

<Inspection procedure>
(1) Select [Inspection Menu].
(2) Select [EGR inspection].
(3) Click [Start inspection].
(4) Click [EGR opening UP]:
• Inspect the response delay at each step of the Target EGR position and Actual EGR position from 0 to 100 %.
(5) Click [EGR opening DOWN]:
• Inspect the response delay at each step of the Target EGR position and Actual EGR position from 100 to 0 %.

**HINT**
**The EGR opening position changes of around 10 % per step between 0 – 100 %.**

| Standard values |
|---|
| **From the Target EGR position to the Actual EGR position, the response delay should be within 5 seconds.** |

**Do the measurements meet the standard value?**

**YES**

**Go to step 2.**

**NO**

**Replace the EGR valve.**
**Perform "After-inspection work" of INFORMATION section.**

| 2 | Check the response delay of the VNT controller [HINO DX II ] |
|---|---|

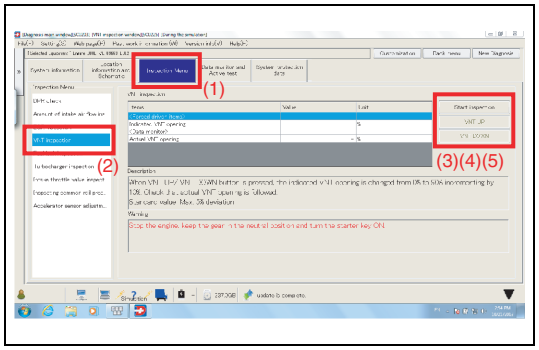


SAPH16F010300442

1. Select [Inspection Menu] from the menu, then inspect the response delay at the Target VNT position and Actual VNT position.

**⚠ CAUTION**
**Perform the inspection while the engine is stopped to avoid damages.**

<Inspection procedure>
(1) Select [Inspection Menu].
(2) Select [VNT inspection].
(3) Click [Start inspection].
(4) Select [VNT UP]:
• Inspect the response delay at each step of the Target VNT position and Actual VNT position from 0 to 90 %.
(5) Select [VNT DOWN]:
• Inspect the response delay at each step of the Target VNT position and Actual VNT position from 90 to 0 %.

**HINT**
**The VNT opening position changes of around 10 % per step between 0 – 90 %.**

| Standard values |
|---|
| From the Target VNT position to the Actual VNT position, the response delay should be within 3 seconds. |

**Do the measurements meet the standard value?**

**YES**

**Go to step 3.**

**NO**

**Replace the turbocharger.**
**Perform "After-inspection work" of INFORMATION section.**

| 3 | Inspect the air cleaner element |
|---|---|

1. Check the air cleaner element for dirt, clogging, or damage.
2. Make sure the element is a Hino genuine part.

**Was any failure found?**

**YES**

**Clean or replace the air cleaner element. Perform "After-inspection work" of INFORMATION section.**

**NO**

**Go to step 4.**

| 4 | Inspect the air flow sensor |
|---|---|

1. Check the installation of the air flow sensor.
2. Make sure there is no dirt or damage to the air flow sensor.

**Was any failure found?**

**YES**

**If damaged, replace the air flow sensor. Perform "After-inspection work" of INFORMATION section.**

**NO**

**Go to step 5.**

| 5 | Inspect the air flow sensor connector |
|---|---|

1. Check the connection of the air flow sensor connector (Looseness and poor contact).

**Was any failure found?**

**YES**

**Connect securely, repair if needed. Perform "After-inspection work" of INFORMATION section.**

**NO**

**Go to step 6.**

| 6 | Check the air intake system |
|---|---|

1. Check the air intake system (between air flow sensor and diesel throttle) for dirt, clogging, or damage.

**Was any failure found?**

| YES | NO |
|---|---|
| **Clean or replace parts as needed.<br>Perform "After-inspection work" of INFORMATION section.** | **Go to step 7.** |

| 7 | Inspect the boost pressure sensor |
|---|---|

1. Check the installation of the boost pressure sensor.
2. Make sure there is no dirt or damage to the boost pressure sensor.

**Was any failure found?**

| YES | NO |
|---|---|
| **Clean the boost pressure sensor and install it properly.<br>If damaged, replace the boost pressure sensor.<br>Perform "After-inspection work" of INFORMATION section.** | **Go to step 8.** |

| 8 | Inspect the intake air temperature sensor (intake manifold) connector |
|---|---|

1. Check the connection of the intake air temperature sensor (intake manifold) connector (Looseness and poor contact).

**Was any failure found?**

| YES | NO |
|---|---|
| **Connect securely, repair if needed.<br>Perform "After-inspection work" of INFORMATION section.** | **Go to step 9.** |

| 9 | Inspect the intake air temperature sensor (intake manifold) |
|---|---|

1. Check the installation of the intake air temperature sensor (intake manifold).
2. Make sure there is no dirt or damage to the intake air temperature sensor (intake manifold).

**Was any failure found?**

| YES | NO |
|---|---|
| **Clean the intake air temperature sensor (intake manifold) and install it properly.<br>If damaged, replace the intake air temperature sensor (intake manifold).<br>Perform "After-inspection work" of INFORMATION section.** | **Go to step 10.** |

## 10 Inspect the intake air temperature sensor (intake manifold) unit

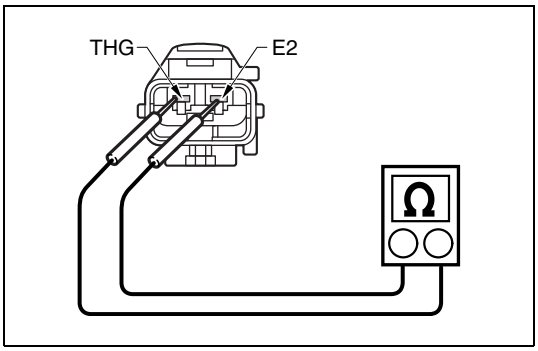

SAPH16F010300443

1. Set the starter switch to the "LOCK" position.
2. Disconnect the intake air temperature sensor (intake manifold) connector.
3. Use the electrical tester to measure the resistance between the terminals of the intake air temperature sensor (intake manifold).

| Measurement conditions | Tester connections | Standard values |
|---|---|---|
| **Starter switch: LOCK** | **Intake air temperature sensor (intake manifold)<br>THG – E2** | **20 °C {68 °F}:<br>7.336 – 5.794 kΩ<br>50 °C {122 °F}:<br>2.435 – 1.994 kΩ** |

**Do the measurements meet the standard value?**

| YES | NO |
|---|---|
| **Go to step 11.** | **Replace the intake air temperature sensor (intake manifold).<br>Perform "After-inspection work" of INFORMATION section.** |

## 11 Inspect the EGR valve

1. Check the EGR valve for damage due to foreign substances.
2. Check if there is soot obstructing the exhaust gas passageway inlet or outlet.

**Was any failure found?**

| YES | NO |
|---|---|
| **Remove foreign substances and clean the valve.<br>Replace the EGR valve if it is damaged.<br>Perform "After-inspection work" of INFORMATION section.** | **Go to step 12.** |

| 12 | Inspect the injector |
|---|---|

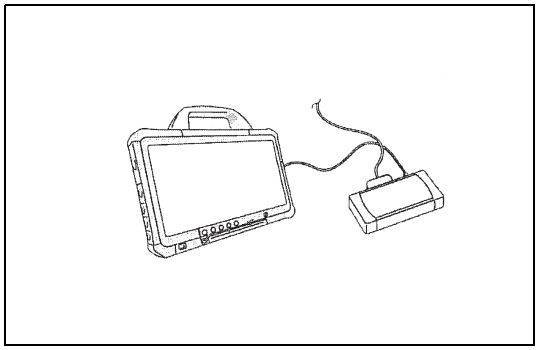

SAPH16F010300444

Check the injection quantity and the rotational fluctuation.

1. Start the engine

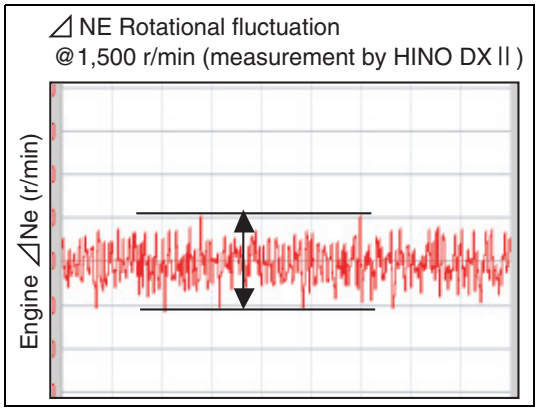


SAPH16F010300445

2. Select [Injection quantity] from the [Data monitor Setting] menu, and measure the amount of fuel injection.

3. Select [Engine speed] from the [Data monitor Setting] menu, and measure the rotational fluctuation.

| Measurement conditions |
|---|
| **Engine speed: 1,500 r/min No-load,<br>T/M shift lever: Neutral position, A/C off and Air compressor non operating.<br>Engine coolant temperature: more than 80 °C {176 °F}** |

**Standard values**

| Type of | Q ($mm^3$/st) | ⊿Ne (r/min) |
|---|---|---|
| MT | 5.0q ≤ | ≤ 26 |
| Allison® 2200 | 6.0q ≤ | |
| Allison® 2500 | | |
| Allison® 3500 | | |

**Do the measurements meet the standard value? (Both the injection quantity and the rotational fluctuation are within the standard values)**

YES

**Go to step 13.**

NO

**Replace the injector.**
**Perform "After-inspection work" of INFORMATION section.**

| 13 | Check the DTC detected (Engine ECU) [HINO DX ll ] |
|---|---|

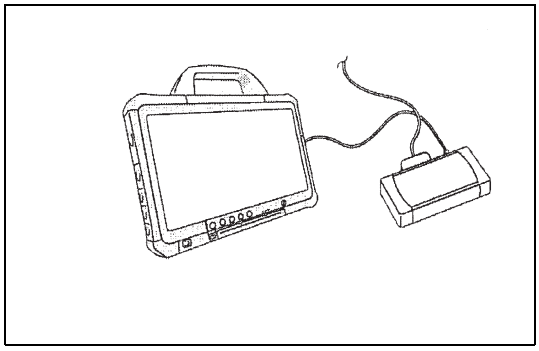

SAPH16F010300447

1. Perform engine warm-up. (engine coolant temperature: 60 °C {140 °F} or more)
2. Stop the engine.
3. Set the starter switch to the "ON" position.
4. Select [Engine] and check if P0402 has been detected.

**Has DTC P0402 been detected?**

YES

**Replace the engine ECU.**
**Perform "After-inspection work" of INFORMATION section.**

NO

**Procedure completed.**
**Perform "After-inspection work" of INFORMATION section.**

# DTC: P0404

EN01H16F01030F03001071

## P0404: Valve position control failure - DC motor out of range, functional (EGR valve stick failure)

INFORMATION

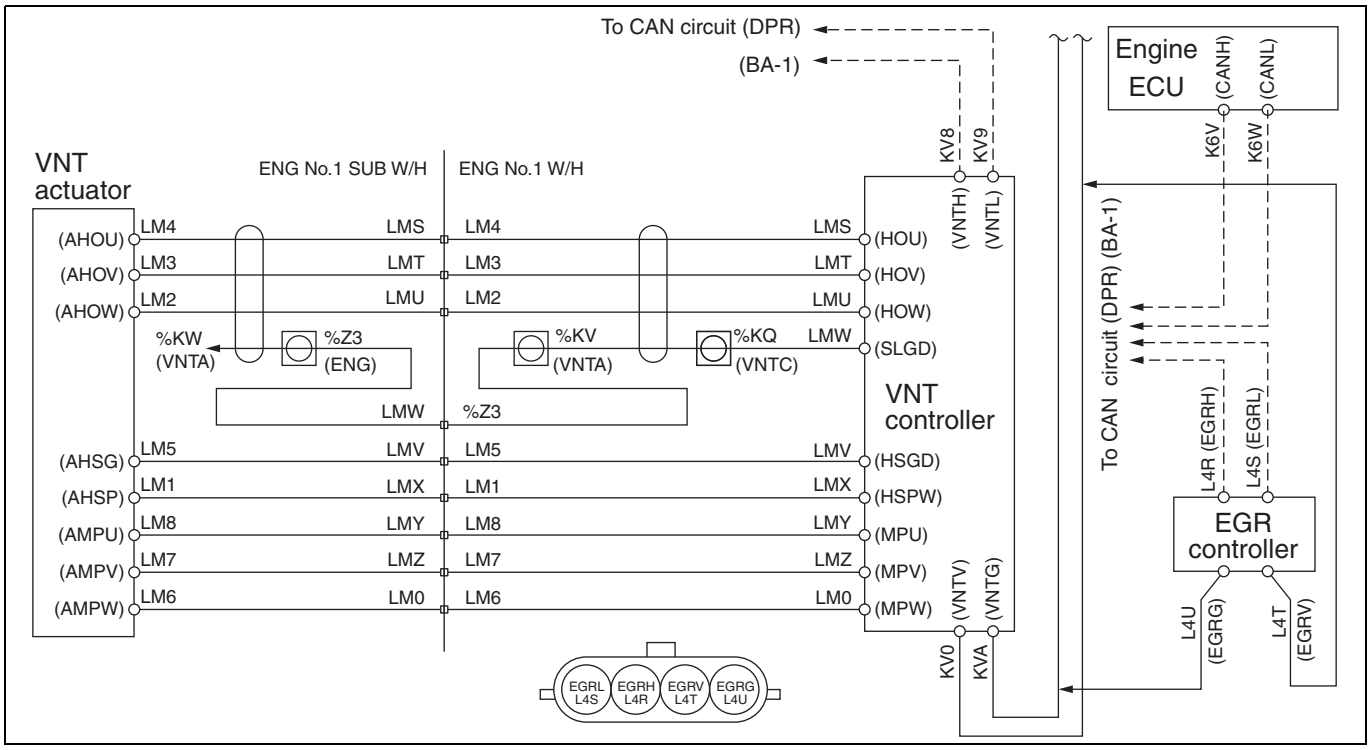


SAPH16F010300448

**1. Technical description**

- EGR valve is a butterfly type.
- EGR valve opening is controlled by engine speed and amount of intake air.
- EGR valve opening is adjusted by engine ECU and CAN communication.
- EGR valve will not operate when engine coolant temperature is low (≤ 40 °C {104 °F}).
- Wiping operation from "fully open → fully closed" is conducted as an EGR valve surface cleaning operation when the starter switch is LOCK.

**<Description of malfunction>**

- Failure message is received from EGR controller.

**2. DTC set condition**

(1) DTC detection condition

- Battery voltage is in the range 8 V to 16 V.
- There is no disconnection in harness connected to EGR valve.
- Starter switch ON. (Not related to engine speed)

(2) Judgment criteria

- When duty during motor control is at least 40 % for 2 seconds.

**3. Reset condition**

- Just after restoration to normal condition.

**4. Indication, warning or system control regulation when the DTC is set.**

- MIL: ON
- SVS light: OFF
- Engine output is restricted.

**5. Symptoms on the vehicle when the DTC is set**

**<Symptoms on the vehicle due to backup control (fail safe function)>**

- Insufficient engine output

**<Symptoms on the vehicle due to malfunction>**

- –

**6. Pre-inspection work**

- Check that the battery voltage is in the normal range.

**7. After-inspection work**

- Clear all past DTCs.
- Check that no DTC is detected after test drive.

**8. Estimated failure factors**

- EGR valve ring parts are damaged due to incursion of foreign substances
- Soot adhesion to EGR valve sealing face and gas passageway, and motor abnormal heat rise due to damage caused by hard foreign substances. (Hardened carbon may peel off from EGR cooler upstream of EGR valve.)

*1. If there is no problem with the above, foreign substance damage occurred when the MIL was ON, but at present the foreign substances are thought to have dropped off and normal operation restored.
*2. This DTC may be detected because there is freezing inside the EGR valve when the outside temperature is low. When the interior thaws, however, normal operation will be restored.

## INSPECTION PROCEDURE: P0404

| 1 | Check the DTC detected (Engine ECU) [HINO DX II ] |
|---|---|

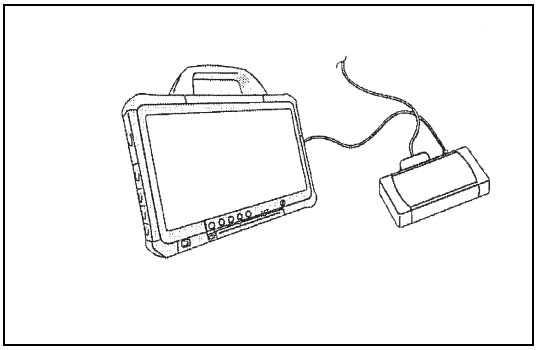

SAPH16F010300449

1. Set the starter switch to the "LOCK" position.
2. Connect the vehicle to HINO DX II .
3. Set the starter switch to the "ON" position.
4. Select [Engine] and check if P0404 has been detected.

**Has a DTC other than P0404 been detected?**

**YES**

**Go to diagnosis procedure of a related DTC.**

**NO**

**Go to step 2.**

| 2 | Inspect the EGR valve |
|---|---|

1. Check if the link joining the actuator and valve unit is disconnected or damaged due to incursion of foreign substances.
2. Check if there is soot obstructing the exhaust gas passageway inlet or outlet.

**Was any failure found?**

**YES**

**Remove foreign substances and clean the valve.**
**Replace the EGR valve if it is damaged.**
**Perform "After-inspection work" of INFORMATION section.**

**NO**

**Go to step 3.**

| 3 | Inspect the EGR valve connector |
|---|---|

1. Check the connection of the EGR valve connector (Looseness and poor contact).

**Was any failure found?**

**YES**

**Connect securely, repair if needed.**
**Perform "After-inspection work" of INFORMATION section.**

**NO**

**Go to step 4.**

| 4 | Inspect the EGR valve power supply |
|---|---|

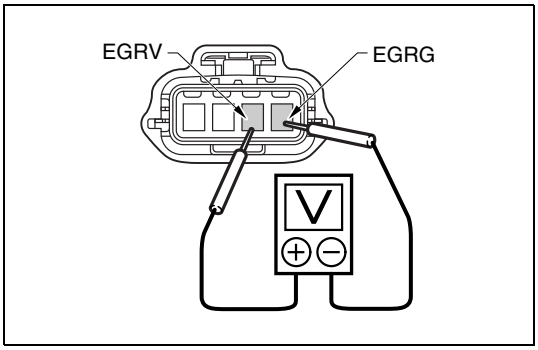


SAPH16F010300450

1. Set the starter switch to the "LOCK" position.
2. Disconnect the EGR valve connector.
3. Set the starter switch to the "ON" position.
4. Use the electrical tester to measure the voltage between the terminals of the EGR valve vehicle-side connector.

| Measurement conditions | Tester connections | Standard values |
|---|---|---|
| Starter switch: ON | EGR valve vehicle-side connector EGRV – EGRG | 8 – 16 V |

**Do the measurements meet the standard value?**

**YES**

**Go to step 5.**

**NO**

**Check the wire harness (actuator power supply and ground) and battery voltage.**
**Repair or replace if needed.**
**Perform "After-inspection work" of INFORMATION section.**

| 5 | Check the response delay of the EGR valve [HINO DX II ] |
|---|---|

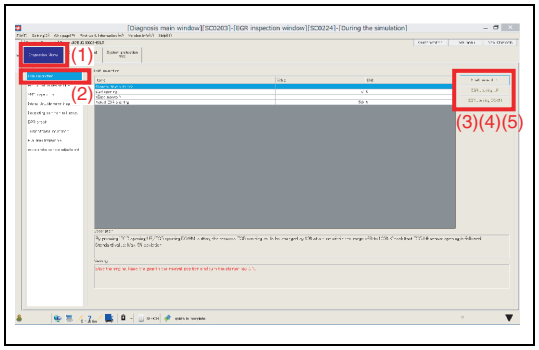


SAPH16F010300451

1. Select [Inspection Menu] and check the time lag (following characteristics) of the target EGR valve opening and actual EGR valve opening.

**⚠ CAUTION**
**Perform the inspection while the engine is stopped to avoid engine damages.**

<Inspection procedure>
(1) Select [Inspection Menu].
(2) Select [EGR inspection].
(3) Click [Start inspection].
(4) Click [EGR opening UP]:
• Check each step from 0 % – 100 % of the time lag (following characteristics) of the target EGR valve opening and actual EGR valve opening.
(5) Click [EGR opening DOWN]:
• Check each step from 100 % – 0 % of the time lag (following characteristics) of the target EGR valve opening and actual EGR valve opening.

**HINT**
**In EGR openings from 0 % – 100 %, 1 step corresponds to a 10 % change.**

| Standard values |
|---|
| The response delay should be less than 5 seconds. |

**Do the measurements meet the standard value?**

**YES**

**Replace the engine ECU.**
**Perform "After-inspection work" of INFORMATION section.**

**NO**

**Replace the EGR valve.**
**Perform "After-inspection work" of INFORMATION section.**

# DTC: P0405 and P0406

EN01H16F01030F03001072

## P0405: EGR valve controller position sensor signal too low (EGR actuator position sensor signal too low)

INFORMATION

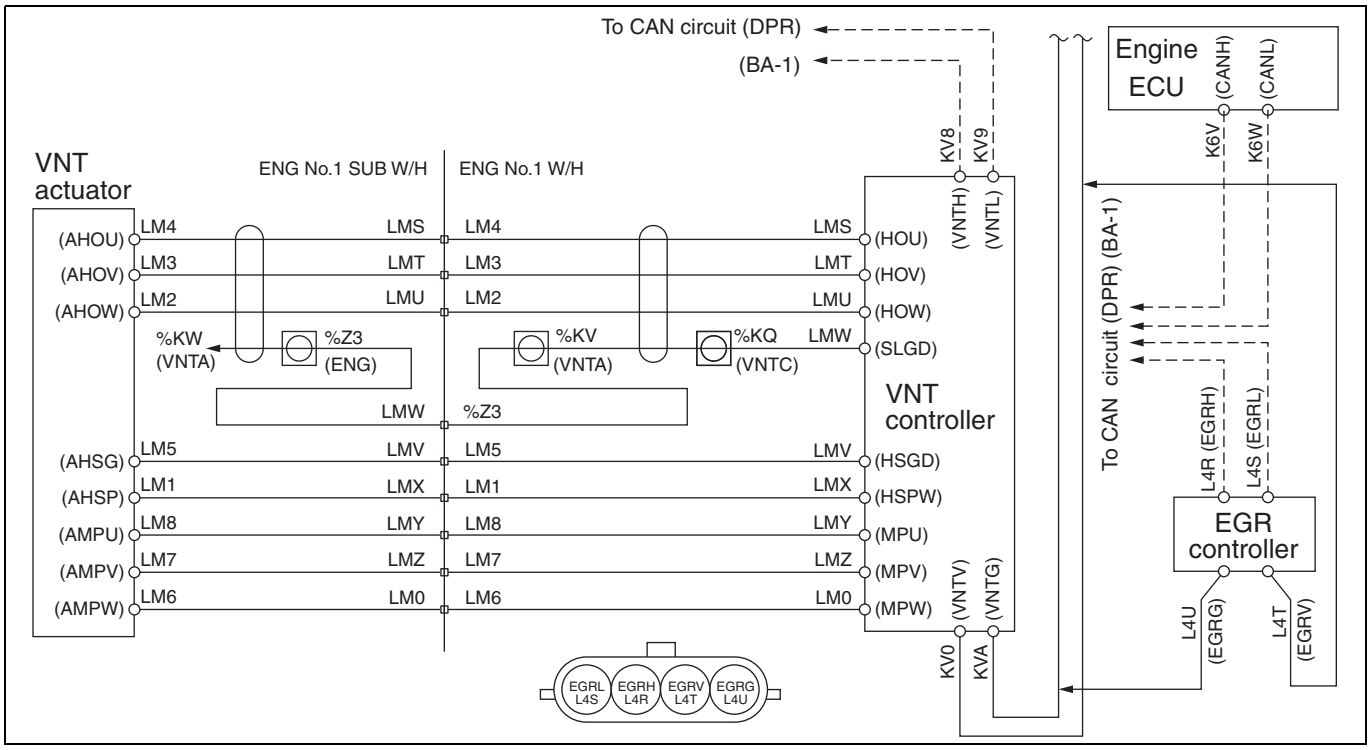


SAPH16F010300452

**1. Technical description**

- EGR valve is a butterfly type.
- EGR valve opening is controlled by engine speed and amount of intake air.
- EGR valve opening is adjusted by engine ECU and CAN communication.
- EGR valve will not operate when engine coolant temperature is low (≤ 40 °C {104 °F}).
- DTC is issued when failure message is received from EGR actuator unit.

**<Description of malfunction>**

- EGR actuator system is malfunctioning.

**2. DTC set condition**

(1) DTC detection condition

- Battery voltage is in the range of 8 V to 16 V.
- There is no disconnection in harness connected to EGR valve.
- Starter switch ON. (Not related to engine speed)

(2) Judgment criteria

- When position sensor input and angle differential with Hall IC exceeds ± 5 %, and this is detected 10 times consecutively (10 ms).

**3. Reset condition**

- When power is supplied again and judgment criteria are resolved.

**4. Indication, warning or system control regulation when the DTC is set.**

- MIL: ON
- SVS light: OFF
- Engine output is restricted.

**5. Symptoms on the vehicle when the DTC is set**

**<Symptoms on the vehicle due to backup control (fail safe function)>**

- Engine output is insufficient.

**<Symptoms on the vehicle due to malfunction>**

- –

**6. Pre-inspection work**

- Check that the battery voltage is in the normal range.

**7. After-inspection work**

- Clear all past DTCs.
- Check that no DTC is detected after test drive.

**8. Estimated failure factors**

- Damaged element inside EGR valve actuator

## P0406: Valve position sensor magnet lost (EGR actuator position sensor signal too high)

INFORMATION

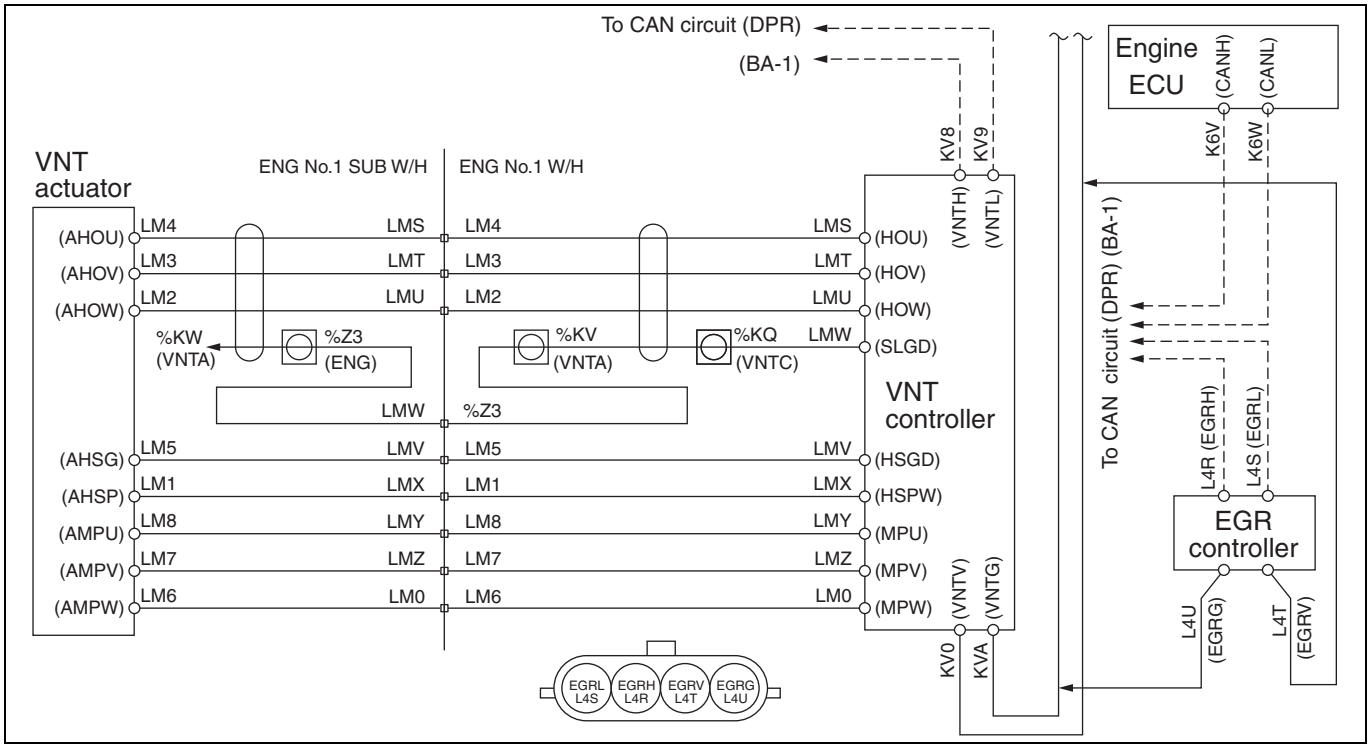


SAPH16F010300453

**1. Technical description**

- EGR valve is a butterfly type.
- EGR valve opening is controlled by engine speed and amount of intake air.
- EGR valve opening is adjusted by engine ECU and CAN communication.
- EGR valve will not operate when engine coolant temperature is low (≤ 40 °C {104 °F}).
- DTC is issued when failure message is received from EGR actuator unit.

**<Description of malfunction>**

- EGR actuator system is malfunctioning.

**2. DTC set condition**

(1) DTC detection condition

- Battery voltage is in the range of 8 V to 16 V.
- There is no disconnection in harness connected to EGR valve.
- Starter switch ON. (Not related to engine speed)

(2) Judgment criteria

- When position sensor cannot detect the magnetic flux of the magnet, and this condition is detected 10 times consecutively (10 ms).

**3. Reset condition**

- After normal operation is restored and accelerator is not being operated.

**4. Indication, warning or system control regulation when the DTC is set.**

- MIL: ON
- SVS light: OFF
- Engine output is restricted.

**5. Symptoms on the vehicle when the DTC is set**

**<Symptoms on the vehicle due to backup control (fail safe function)>**

- Engine output is insufficient.

**<Symptoms on the vehicle due to malfunction>**

- –

**6. Pre-inspection work**

- Check that the battery voltage is in the normal range.

**7. After-inspection work**

- Clear all past DTCs.
- Check that no DTC is detected after test drive.

**8. Estimated failure factors**

- Damaged element inside EGR valve actuator
- Damaged output shaft magnet inside EGR valve actuator

## INSPECTION PROCEDURE: P0405 and P0406

| 1 | Check the DTC detected (Engine ECU) [HINO DX II ] |
|---|---|

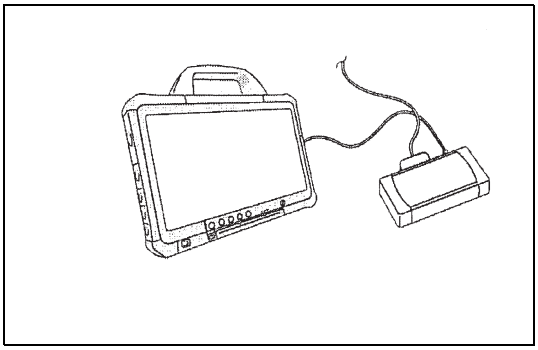

SAPH16F010300454

1. Set the starter switch to the "LOCK" position.
2. Connect the vehicle to HINO DX II .
3. Set the starter switch to the "ON" position.
4. Select [Engine] and check if any DTC other than (P0405 or P0406) has been detected.

**Has any DTC other than (P0405 or P0406) been detected?**

**YES**

**Go to diagnosis procedure of a related DTC.**

**NO**

**Go to step 2.**

| 2 | Inspect the EGR valve connector |
|---|---|

1. Check the connection of the EGR valve connector (Looseness and poor contact).

**Was any failure found?**

**YES**

**Connect securely, repair if needed.**
**Perform "After-inspection work" of INFORMATION section.**

**NO**

**Go to step 3.**

| 3 | Inspect the EGR valve power supply |
|---|---|

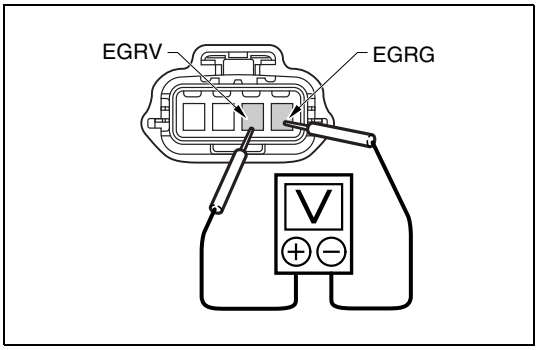


SAPH16F010300455

1. Set the starter switch to the "LOCK" position.
2. Disconnect the EGR valve connector.
3. Set the starter switch to the "ON" position.
4. Use the electrical tester to measure the voltage between the terminals of the EGR valve vehicle-side connector.

| Measurement conditions | Tester connections | Standard values |
|---|---|---|
| Starter switch: ON | EGR valve vehicle-side connector EGRV – EGRG | 8 – 16 V |

**Do the measurements meet the standard value?**

| YES | NO |
|---|---|
| **Replace the EGR valve, and go to step 4.** | **Check the wire harness (actuator power supply and ground) and battery voltage.<br>Repair or replace parts as needed.<br>Perform "After-inspection work" of INFORMATION section.** |

| 4 | **Check the DTC detected (Engine ECU) [HINO DX ll ]** |
|---|---|

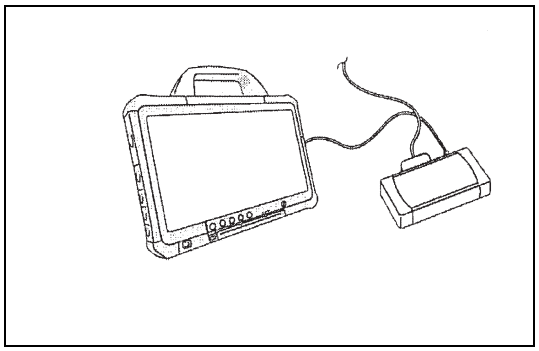

SAPH16F010300456

1. Set the starter switch to the "ON" position.
2. Select [Engine] and check if the DTC (P0405 or P0406) has been detected.

**Has DTC (P0405 or P0406) been detected?**

| YES | NO |
|---|---|
| **Replace the engine ECU.<br>Perform "After-inspection work" of INFORMATION section.** | **Procedure completed.<br>Perform "After-inspection work" of INFORMATION section.** |

# DTC: P041B

EN01H16F01030F03001073

## P041B: EGR gas temperature sensor - rationality

INFORMATION [at engine start]

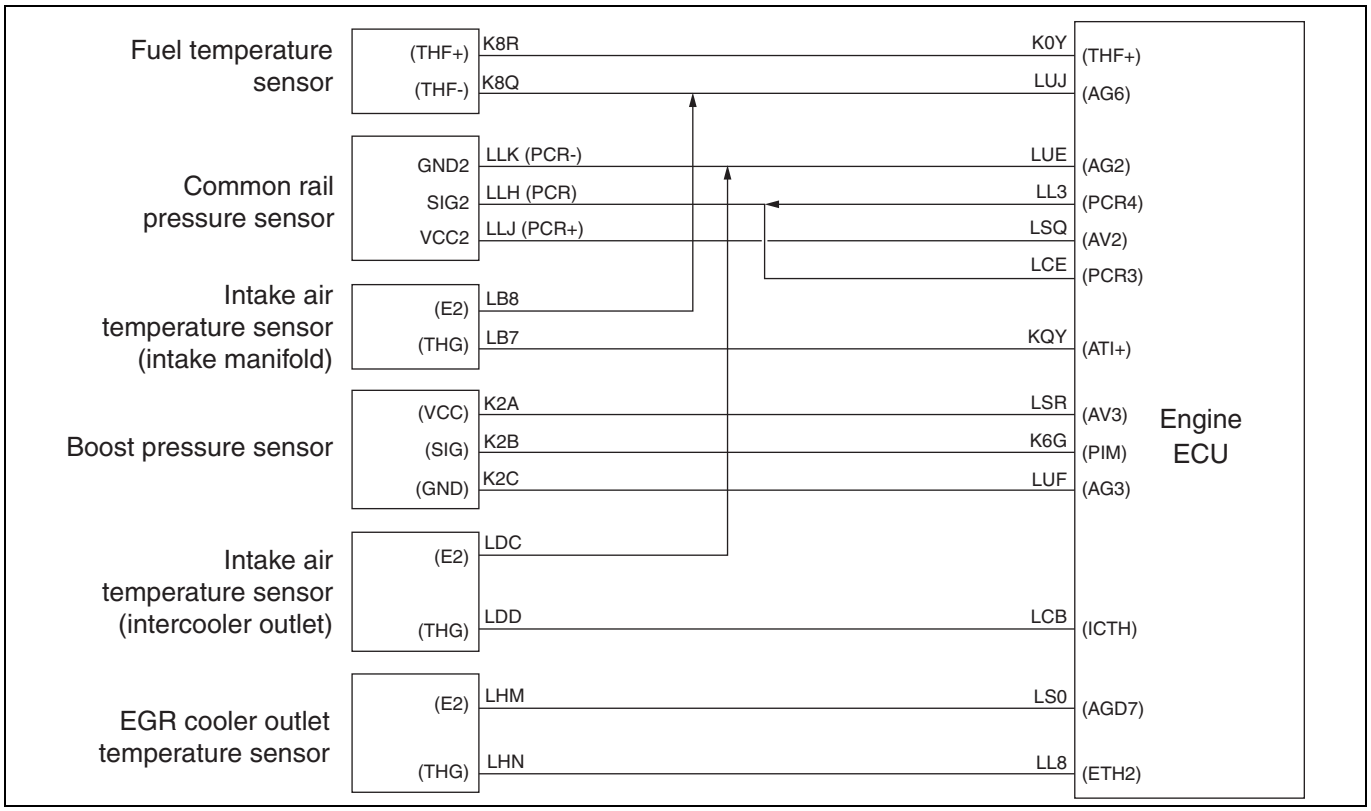


SAPH16F010300457

**1. Technical description**

- The EGR cooler outlet temperature sensor consistently measures temperature at the outlet of the EGR cooler.

**<Description of malfunction>**

- EGR cooler outlet temperature cannot be correctly recognized.

**2. DTC set condition**

(1) DTC detection condition

- Engine speed of 1,000 r/min or lower and injection quantity of 35 $mm^3$/st. or lower
- Engine coolant temperature is in the range of -30 °C {-22 °F} to 30 °C {86 °F}.
- Battery voltage is in the range of 10 V to 16 V.
- Exhaust brake is not used.

(2) Judgment criteria

- The parameters described above are counted for at least 20 seconds and an average EGR temperature is 70 °C {158 °F} or higher.

**3. Reset condition**

- Immediately after normal operation is restored.

**4. Indication, warning or system control regulation when the DTC is set.**

- MIL: ON
- SVS light: OFF

**5. Symptoms on the vehicle when the DTC is set**

**<Symptoms on the vehicle due to backup control (fail safe function)>**

- –

**<Symptoms on the vehicle due to malfunction>**

- –

**6. Pre-inspection work**

- Check that the battery voltage is in the normal range.

**7. After-inspection work**

- Clear all past DTCs.
- Check that no DTC is detected after test drive.

**8. Estimated failure factors**

- Loose/disconnected sensor or failure in sensing area (contamination, clogging or damage)
- Abnormal resistance of sensor (stuck)
- Malfunction of engine ECU sensor power supply or internal circuit failure

## P041B: EGR gas temperature sensor - rationality

INFORMATION [at engine running]

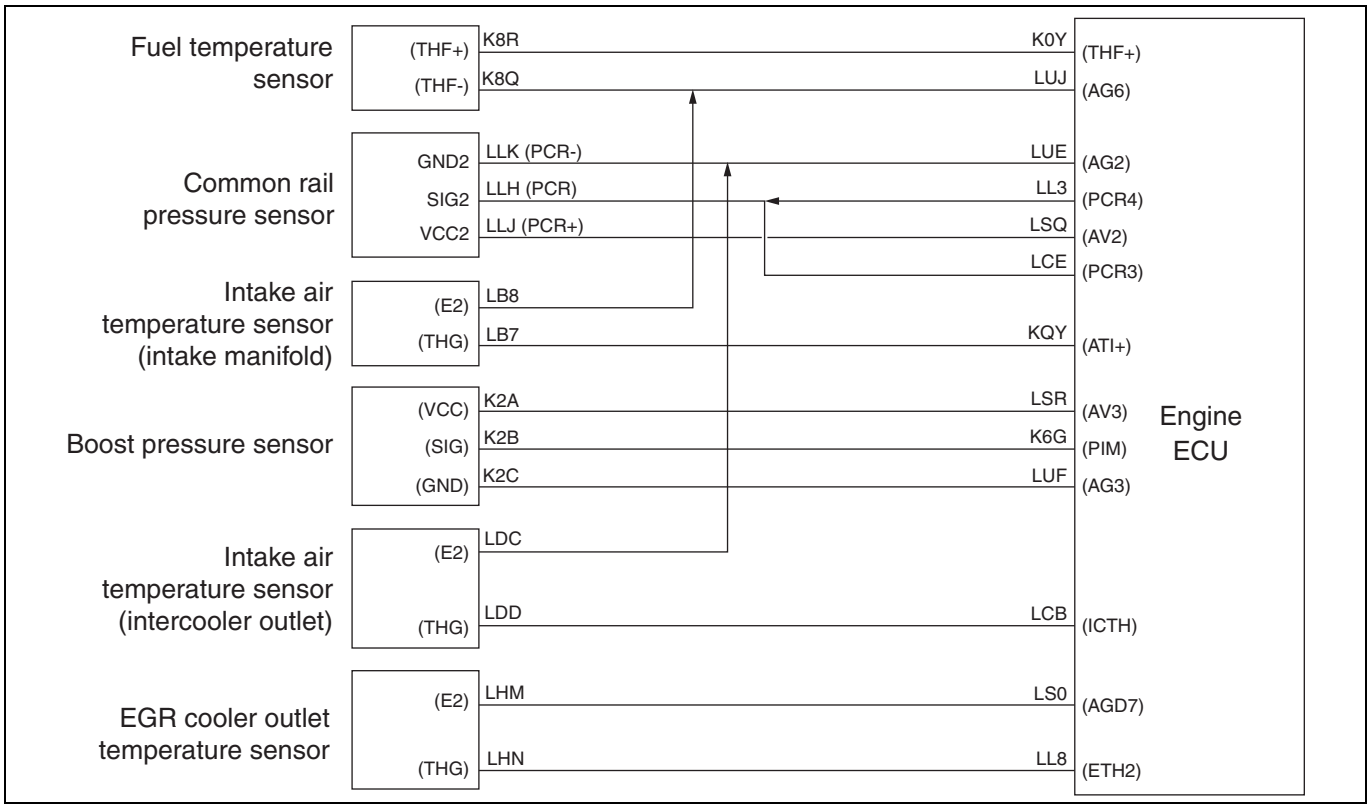


SAPH16F010300458

**1. Technical description**

- The EGR cooler outlet temperature sensor consistently measures temperature at the outlet of the EGR cooler.

**<Description of malfunction>**

- EGR cooler outlet temperature cannot be correctly recognized.

**2. DTC set condition**

(1) DTC detection condition

- Engine speed ≥ 1,500 r/min.
- Fuel injection quantity ≥ 40 $mm^3$/st. cyl.
- Battery voltage is in the range of 10 V to 16 V.
- Engine speed fluctuation < 20 r/min/sec.
- Fuel injection quantity fluctuation < 10 $mm^3$/st. cyl.
- Atmospheric pressure ≥ 75 kPa {10.8 psi}.
- Exhaust brake is not used.
- Air intake quantity ≥ 75 g/sec.
- EGR gas flow quantity ≥ 36 kg/h.

The above conditions continue for at least 40 seconds.

(2) Judgment criteria

- The calculated EGR cooler efficiency, which is derived from the engine speed, fuel injection rate, EGR gas outlet temperature, and coolant temperature, exceeds 105 %, or less than 80 %.
- The difference among the estimated EGR quantity calculated from the engine speed and fuel injection rate, the estimated intake manifold temperature calculated from the EGR gas outlet temperature sensor and intake air temperature sensor (intercooler outlet), and the reading of the intake air temperature sensor (intake manifold) is at least 30 °C {86 °F} (when the calculated intercooler efficiency is at least 30 – 50 %).

**3. Reset condition**

- After normal operation is restored and the starter switch is on the "LOCK" position.

**4. Indication, warning or system control regulation when the DTC is set.**

- MIL: ON
- SVS light: OFF

**5. Symptoms on the vehicle when the DTC is set**

**<Symptoms on the vehicle due to backup control (fail safe function)>**

- –

**<Symptoms on the vehicle due to malfunction>**

- –

**6. Pre-inspection work**

- Check that the battery voltage is in the normal range.

**7. After-inspection work**

- Clear all past DTCs.
- Check that no DTC is detected after test drive.

**8. Estimated failure factors**

- Malfunction of intake air temperature sensor (intercooler outlet)
- Malfunction of intake air temperature sensor (intake manifold)
- Malfunction of boost pressure sensor
  - Loose/disconnected sensor or failure in sensing area (contamination, clogging or damage)
  - Abnormal resistance of sensor (stuck)
- Malfunction of engine ECU sensor power supply

## INSPECTION PROCEDURE: P041B

| 1 | Inspect the EGR cooler outlet temperature sensor connector |
|---|---|

1. Check the connection of the EGR cooler outlet temperature sensor connector (Looseness and poor contact).

**Was any failure found?**

**YES**

**Connect securely, repair if needed.**
**Perform "After-inspection work" of INFORMATION section.**

**NO**

**Go to step 2.**

| 2 | Inspect the EGR cooler outlet temperature sensor |
|---|---|

1. Check the installation of the EGR cooler outlet temperature sensor.
2. Make sure there is no dirt or damage to the EGR cooler outlet temperature sensor.

**Was any failure found?**

**YES**

**Clean the EGR cooler outlet temperature sensor and install it properly.**
**If damaged, replace the EGR cooler outlet temperature sensor.**
**Perform "After-inspection work" of INFORMATION section.**

**NO**

**Go to step 3.**

## 3 Inspect the EGR cooler outlet temperature sensor unit

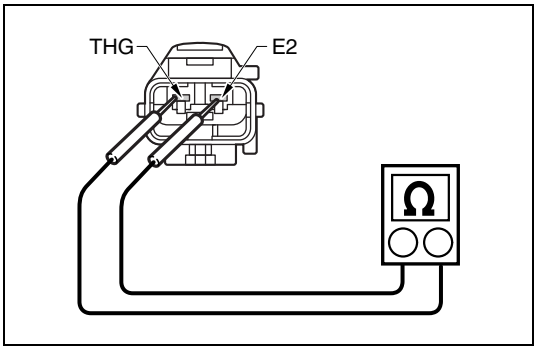


SAPH16F010300459

1. Set the starter switch to the "LOCK" position.
2. Disconnect the EGR cooler outlet temperature sensor connector.
3. Use the electrical tester to measure the resistance between the terminals of the EGR cooler outlet temperature sensor.

| Measurement conditions | Tester connections | Standard values |
|---|---|---|
| Starter switch: LOCK | EGR cooler outlet temperature sensor THG – E2 | 20 °C {68 °F}: 13.7 – 29.8 kΩ<br>50 °C {122 °F}: 7.13 – 13.7 kΩ<br>80 °C {176 °F}: 4.1 – 7.13 kΩ |

**Do the measurements meet the standard value?**

**YES**

**Go to step 4.**

**NO**

**Replace the EGR cooler outlet temperature sensor.**
**Perform "After-inspection work" of INFORMATION section.**

## 4 Inspect the EGR cooler outlet temperature sensor power supply

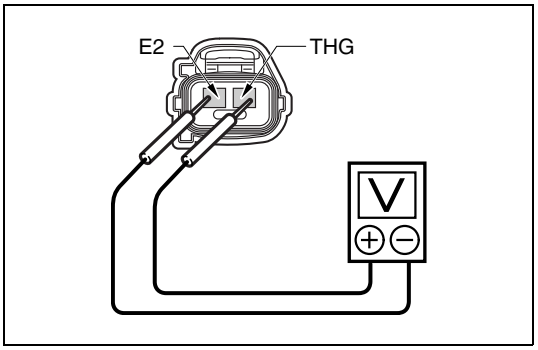


SAPH16F010300460

1. Set the starter switch to the "ON" position.
2. Use the electrical tester to measure the voltage between the terminals of the EGR cooler outlet temperature sensor vehicle-side connector.

| Measurement conditions | Tester connections | Standard values |
|---|---|---|
| Starter switch: ON | EGR cooler outlet temperature sensor vehicle-side connector THG – E2 | 4.5 – 5.5 V |

**Do the measurements meet the standard value?**

**YES**

**Go to step 7.**

**NO**

**Go to step 5.**

| 5 | Inspect for short-circuit of the EGR cooler outlet temperature sensor harness |
|---|---|

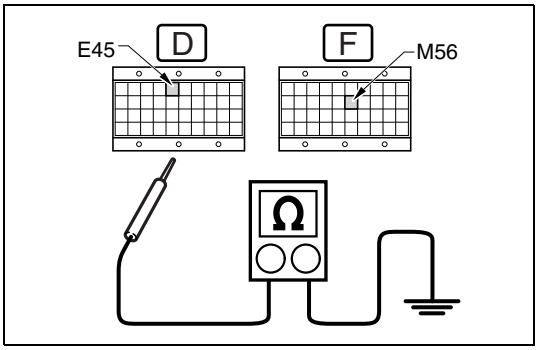

SAPH16F010300461

1. Set the starter switch to the "LOCK" position.
2. Connect the signal check harness to the engine ECU. (Do not connect harness to the ECU.)
3. Use the electrical tester to measure the resistance between the terminals of the EGR cooler outlet temperature sensor and ground.

| Measurement conditions | Tester connections | Standard values |
|---|---|---|
| **Starter switch: LOCK** | **Engine ECU (signal check harness) ETH2(E45) – Ground AGD7(M56) – Ground** | **∞ Ω** |

**Do the measurements meet the standard value?**

**YES**

**Go to step 6.**

**NO**

**Repair or replace the harness.**
**Perform "After-inspection work" of INFORMATION section.**

| 6 | Inspect disconnection of the EGR cooler outlet temperature sensor harness |
|---|---|

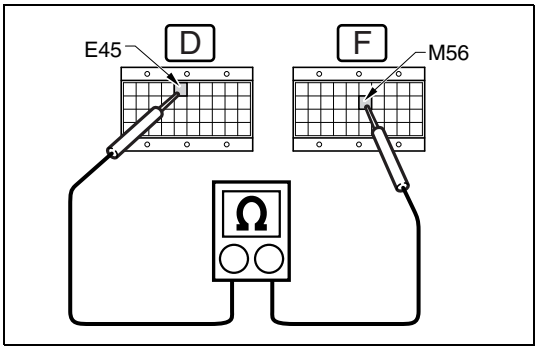

SAPH16F010300462

1. Connect the EGR cooler outlet temperature sensor connector.
2. Use the electrical tester to measure the resistance between the terminals of the engine ECU (signal check harness).

| Measurement conditions | Tester connections | Standard values |
|---|---|---|
| **Starter switch: LOCK** | **Engine ECU (signal check harness) ETH2(E45) – AGD7(M56)** | **20 °C {68 °F}: 13.7 – 29.8 kΩ 50 °C {122 °F}: 7.13 – 13.7 kΩ 80 °C {176 °F}: 4.1 – 7.13 kΩ** |

**Do the measurements meet the standard value?**

| YES | NO |
|---|---|
| **Go to step 7.** | **Repair or replace the harness.<br>Perform "After-inspection work" of INFORMATION section.** |

| 7 | Check the DTC detected (Engine ECU) [HINO DX ll ] |
|---|---|

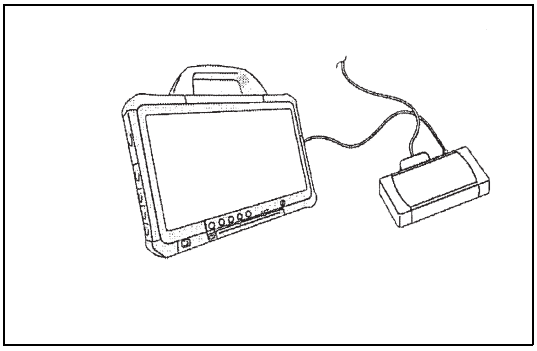

SAPH16F010300463

1. Perform engine warm-up. (engine coolant temperature: 60 °C {140 °F} or more)
2. Stop the engine and set the starter switch to the "LOCK" position.
3. Connect the vehicle to HINO DX II .
4. Set the starter switch to the "ON" position.
5. Select [Engine] and check if P041B has been detected.

**Has DTC P041B been detected?**

| YES | NO |
|---|---|
| **Replace the engine ECU.<br>Perform "After-inspection work" of INFORMATION section.** | **Procedure completed.<br>Perform "After-inspection work" of INFORMATION section.** |

# DTC: P041C and P041D

EN01H16F01030F03001074

## P041C: EGR gas temperature sensor - out of range (Out of range low)

INFORMATION

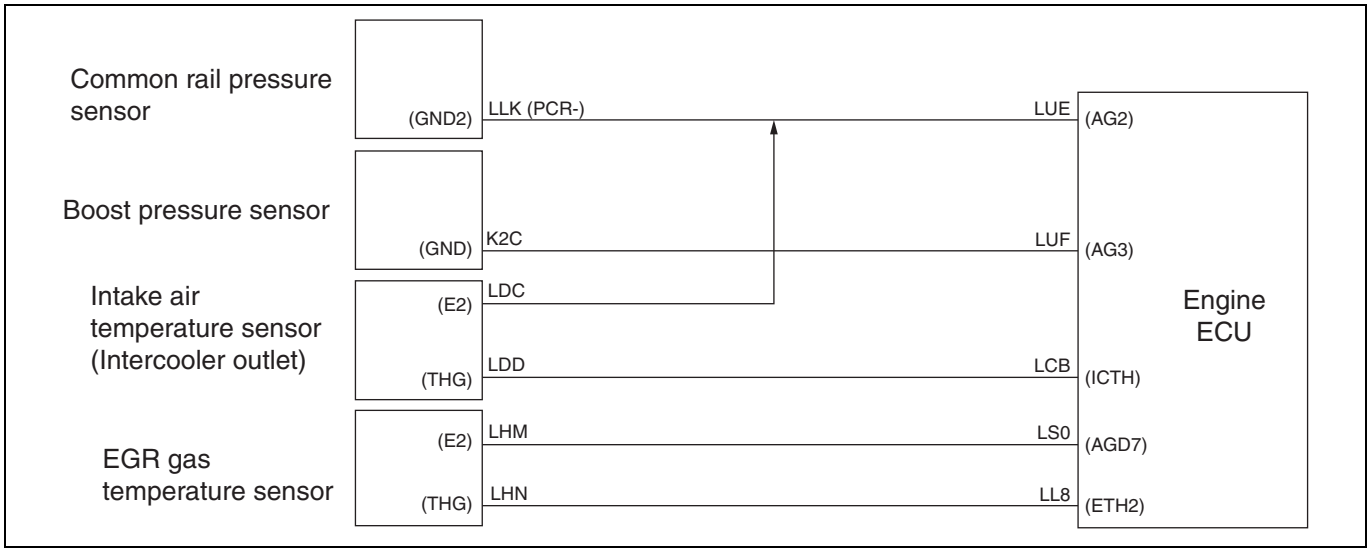


SAPH16F010300464

**1. Technical description**

- The installed EGR cooler outlet temperature sensor consistently measures temperature at the outlet of the EGR cooler.

**<Description of malfunction>**

- EGR cooler outlet temperature cannot be correctly recognized.

**2. DTC set condition**

(1) DTC detection condition

- Starter switch ON.
- Battery voltage is in the range of 10 V to 16 V.

Above conditions continue for at least 5 seconds.

(2) Judgment criteria

- Output of the EGR cooler outlet temperature sensor remains at 0.19 V or less (740 °C {1,364 °F} or higher) for 3 seconds or longer.

**3. Reset condition**

- After restoration to normal condition.

**4. Indication, warning or system control regulation when the DTC is set.**

- MIL: ON
- SVS light: OFF

**5. Symptoms on the vehicle when the DTC is set**

**<Symptoms on the vehicle due to backup control (fail safe function)>**

- –

**<Symptoms on the vehicle due to malfunction>**

- –

**6. Pre-inspection work**

- Check that the battery voltage is in the normal range.

**7. After-inspection work**

- Clear all past DTCs.
- Check that no DTC is stored after test drive.

**8. Estimated failure factors**

- Abnormal resistance of sensor
- Short-circuit in the sensor.
- Disconnection or short-circuit of the harness.
- Malfunction of sensor power supply in the engine ECU.
- Malfunction of the engine ECU circuit.

## P041D: EGR gas temperature sensor - out of range (Out of range high)

INFORMATION

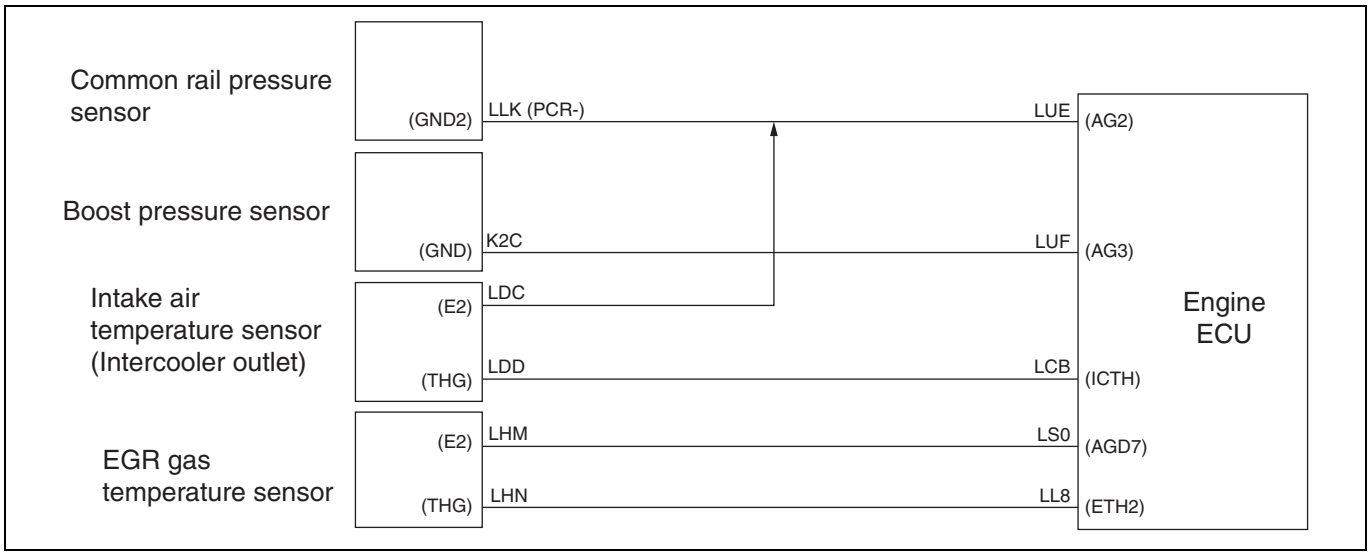


SAPH16F010300465

**1. Technical description**

- The installed EGR cooler outlet temperature sensor consistently measures temperature at the outlet of the EGR cooler.

**<Description of malfunction>**

- The EGR cooler outlet temperature cannot be correctly recognized.

**2. DTC set condition**

(1) DTC detection condition

- Starter switch ON.
- Battery voltage is in the range of 10 V to 16 V.

Above conditions continue for at least 5 seconds.

(2) Judgment criteria

- Output of the EGR cooler outlet temperature sensor remains at 4.97 V or higher (-40 °C {-40 °F} or lower) for 3 seconds or longer.

**3. Reset condition**

- After restoration to normal condition.

**4. Indication, warning or system control regulation when the DTC is set.**

- MIL: ON
- SVS light: OFF

**5. Symptoms on the vehicle when the DTC is set**

**<Symptoms on the vehicle due to backup control (fail safe function)>**

- –

**<Symptoms on the vehicle due to malfunction>**

- –

**6. Pre-inspection work**

- Check that the battery voltage is in the normal range.

**7. After-inspection work**

- Clear all past DTCs.
- Check that no DTC is stored after test drive.

**8. Estimated failure factors**

- Abnormal resistance of sensor.
- Short-circuit in the sensor.
- Malfunction of the sensor power supply in the engine ECU.
- Malfunction the circuit in the engine ECU.
- Disconnect and short-circuit of the harness.
- Irregular contact of the connector.

## INSPECTION PROCEDURE: P041C and P041D

**1 Inspect the EGR cooler outlet temperature sensor connector**

1. Check the connection of the EGR cooler outlet temperature sensor connector (Looseness and poor contact).

**Was any failure found?**

**YES**

**Connect securely, repair if needed.**
**Perform "After-inspection work" of INFORMATION section.**

**NO**

**Go to step 2.**

**2 Inspect the EGR cooler outlet temperature sensor**

1. Check the installation of the EGR cooler outlet temperature sensor.
2. Make sure there is no dirt or damage to the EGR cooler outlet temperature sensor.

**Was any failure found?**

**YES**

**Clean the EGR cooler outlet temperature sensor and install it properly.**
**If damaged, replace the EGR cooler outlet temperature sensor.**
**Perform "After-inspection work" of INFORMATION section.**

**NO**

**Go to step 3.**

## 3 Inspect the EGR cooler outlet temperature sensor

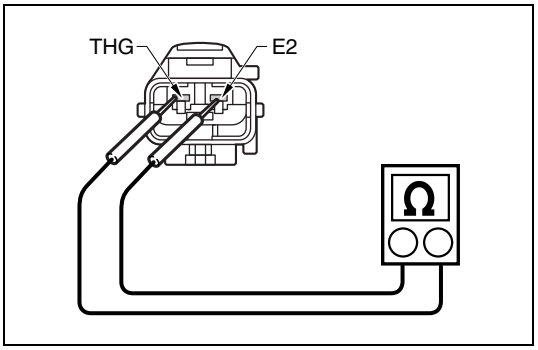


SAPH16F010300466

1. Set the starter switch to the "LOCK" position.
2. Disconnect the EGR cooler outlet temperature sensor connector.
3. Use the electrical tester to measure the resistance between the terminals of the EGR cooler outlet temperature sensor.

| Measurement conditions | Tester connections | Standard values |
|---|---|---|
| Starter switch: LOCK | EGR cooler outlet temperature sensor THG – E2 | 20 °C {68 °F}: 13.7 – 29.8 kΩ<br>50 °C {122 °F}: 7.13 – 13.7 kΩ<br>80 °C {176 °F}: 4.1 – 7.13 kΩ |

**Do the measurements meet the standard value?**

**YES**

**Go to step 4.**

**NO**

**Replace the EGR cooler outlet temperature sensor.**
**Perform "After-inspection work" of INFORMATION section.**

## 4 Inspect the EGR cooler outlet temperature sensor power supply

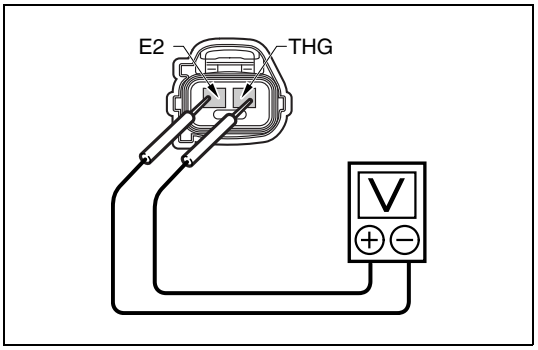


SAPH16F010300467

1. Set the starter switch to the "ON" position.
2. Use the electrical tester to measure the voltage between the terminals of the EGR cooler outlet temperature sensor vehicle-side connector.

| Measurement conditions | Tester connections | Standard values |
|---|---|---|
| Starter switch: ON | EGR cooler outlet temperature sensor vehicle-side connector THG – E2 | 4.5 – 5.5 V |

**Do the measurements meet the standard value?**

**YES**

**Go to step 7.**

**NO**

**Go to step 5.**

## 5 Check for short-circuit in wire harness of EGR cooler outlet temperature sensor

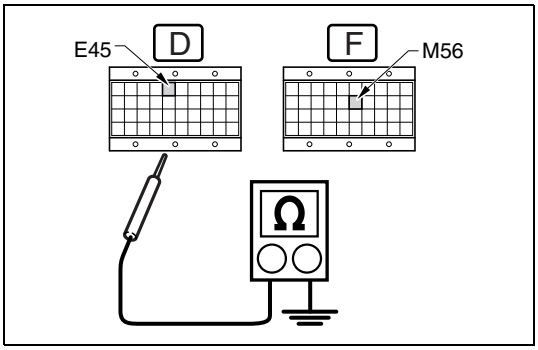

SAPH16F010300468

1. Set the starter switch to the "LOCK" position.
2. Connect the signal check harness to the engine ECU vehicle-side harness. (Do not connect the harness to the ECU.)
3. Use the electrical tester to measure the resistance between the EGR cooler outlet temperature sensor terminals and ground.

| Measurement conditions | Tester connections | Standard values |
|---|---|---|
| **Starter switch: LOCK** | **Engine ECU (signal check harness) ETH2(E45) – Ground AGD7(M56) – Ground** | **∞ Ω** |

**Do the measurements meet the standard value?**

**YES**

**Go to step 6.**

**NO**

**Repair or replace the harness. Perform "After-inspection work" of INFORMATION section.**

## 6 Check for disconnection in wire harness of EGR cooler outlet temperature sensor

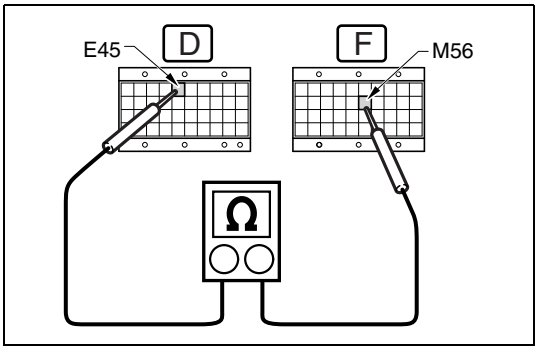

SAPH16F010300469

1. Connect the EGR cooler outlet temperature sensor connector.
2. Use the electrical tester to measure the resistance between the terminals of the engine ECU (signal check harness).

| Measurement conditions | Tester connections | Standard values |
|---|---|---|
| **Starter switch: LOCK** | **Engine ECU (signal check harness) ETH2(E45) – AGD7(M56)** | **20 °C {68 °F}: 13.7 – 29.8 kΩ 50 °C {122 °F}: 7.13 – 13.7 kΩ 80 °C {176 °F}: 4.1 – 7.13 kΩ** |

**Do the measurements meet the standard value?**

**YES**

**Go to step 7.**

**NO**

**Repair or replace the harness. Perform "After-inspection work" of INFORMATION section.**

| 7 | Check the DTC detected (Engine ECU) [HINO DX ll ] |
|---|---|

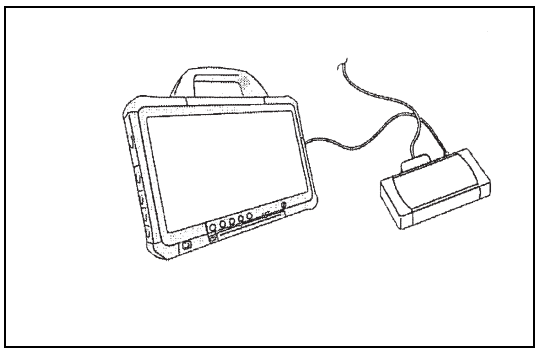

SAPH16F010300470

1. Warm up the Engine. (engine coolant temperature: 60 °C {140 °F} or more)
2. Stop the engine and set the starter switch to the "LOCK" position.
3. Connect the vehicle to HINO DX II .
4. Set the starter switch to the "ON" position.
5. Select [Engine] and check if the DTC (P041C or P041D) has been detected.

**Has DTC (P041C or P041D) been detected?**

**YES**

**Replace the engine ECU.**
**Perform "After-inspection work" of INFORMATION section.**

**NO**

**Procedure completed.**
**Perform "After-inspection work" of INFORMATION section.**

# DTC: P0420

EN01H16F01030F03001075

## P0420: Tentative determination of ATC deterioration

INFORMATION

**1. Technical description**

**<Description of malfunction>**

- If the ATC (oxidation catalyst) is not generating heat, the engine ECU tentatively determines abnormality as ATC deterioration (P0420).
- When this DTC is detected, perform troubleshooting for P0148 (abnormality in post injection) and P0421 (determination of ATC deterioration).

**2. DTC set condition**

(1) DTC detection condition

- –

(2) Judgment criteria

- –

**3. Reset condition**

- Immediately after normal status is resumed

**4. Indication, warning or system control regulation when the DTC is set.**

- MIL: OFF
- SVS light: OFF

**5. Symptoms on the vehicle when the DTC is set**

**<Symptoms on the vehicle due to backup control (fail safe function)>**

- –

**<Symptoms on the vehicle due to malfunction>**

- –

**6. Pre-inspection work**

- Check that the battery voltage is in the normal range.

**7. After-inspection work**

- Clear all past DTCs.
- Check that no DTC is detected after test drive.

**8. Estimated failure factors**

- P0420

## INSPECTION PROCEDURE: P0420

| 1 | Check the DTC detected [HINO DX II ] |
|---|---|

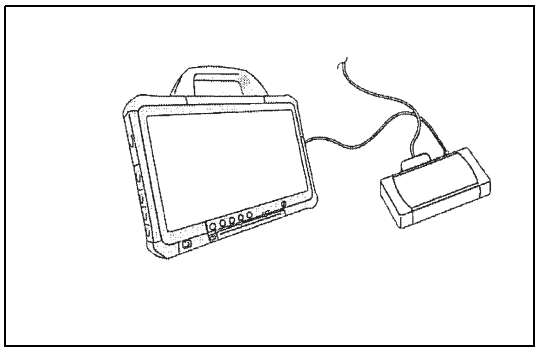

SAPH16F010300471

1. Set the starter switch to the "LOCK" position.
2. Connect the diagnostic system (HINO DX II ) to the vehicle.
3. Set the starter switch to the "ON" position.
4. Select [Engine] on the screen of HINO DX II and check if the DTC P0420 has been detected.

**Has DTC P0420 been detected?**

**YES**

**Perform DTC-specific troubleshooting for.**
- **P0148**
- **P0421**

**NO**

**Procedure completed.**

# DTC: P0421

EN01H16F01030F03001076

## P0421: Determination of ATC deterioration

INFORMATION

**1. Technical description**

**<Description of malfunction>**

- If post injection is performed normally but the ATC (oxidation catalyst) is not generating heat, the engine ECU detects abnormality as ATC functional deterioration.

**2. DTC set condition**

(1) DTC detection condition
During DPR active regeneration.
Conditions below continue for 35 sec.
- Engine speed: 700 r/min or higher, 1,000 r/min or lower.
- Fuel injection quantity: 40 $mm^3$/st. or lower
- Engine speed fluctuation: 156 r/min/sec or lower
- Fuel injection quantity fluctuation: 39 $mm^3$/st./sec or less
- Post-injection quantity: 17.5 $mm^3$/st. or more
- ATC inlet temperature: 300°C {572°F} or higher
- Post injection has no malfunction.
- Exhaust gas mass flow ≤ 210kg/h

(2) Judgment criteria
Both of the following conditions must be met.
- ATC outlet temperature – ATC inlet temperature is below the specified value.

**3. Reset condition**

- Immediately after normal status is resumed

**4. Indication, warning or system control regulation when the DTC is set.**

- MIL: ON
- SVS light: OFF

**5. Symptoms on the vehicle when the DTC is set**

**<Symptoms on the vehicle due to backup control (fail safe function)>**

- –

**<Symptoms on the vehicle due to malfunction>**

- –

**6. Pre-inspection work**

- Check that the battery voltage is in the normal range.

**7. After-inspection work**

- Clear all past DTC.
- After starting the DPR automatic regeneration, form the DTC detection condition.
- Check that no DTC is detected after test drive.

**8. Estimated failure factors**

- ATC deterioration caused by use of low-grade fuel
- Improper adjustment of exhaust brake valve.
- Leak of exhaust gas from the pipe.
- ATC inlet exhaust gas temperature sensor malfunction.
- ATC outlet exhaust gas temperature sensor malfunction.

## INSPECTION PROCEDURE: P0421

| 1 | Check the engine ECU |
|---|---|

1. Set the starter switch to the "LOCK" position.
2. Check the engine ECU software part number (ECU part number) by HINO DX II .
   Confirm the latest part number with Hino national service manager.

**Does the engine ECU have the latest software number?**

| YES | NO |
|---|---|
| **Go to step 2.** | **Reprogram the engine ECU by using HINO DX II and then go to step 2.** |

| 2 | Inspect the exhaust leaks from the exhaust pipe between exhaust gas temperature sensor 1 (ATC upstream) and the exhaust gas temperature sensor 3 (DOC inlet) |
|---|---|

1. Check that the exhaust pipe has no looseness of flange or pipe breakage.

**Was any failure found?**

| YES | NO |
|---|---|
| **Repair or replace the faulty part.<br>Perform "After-inspection work" of INFORMATION section.** | **Go to step 3.** |

| 3 | Inspect the exhaust brake valve [HINO DX II ] |
|---|---|

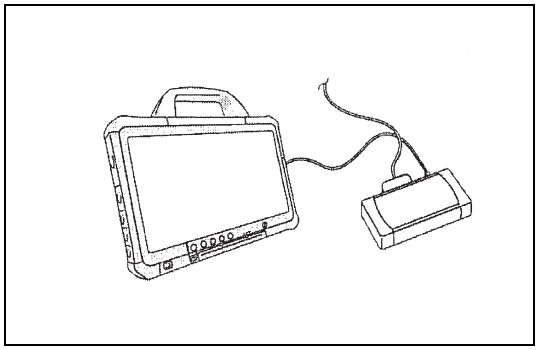

SAPH16F010300472

1. Warm up the engine. (Coolant temperature: 80 °C {176 °F} or more)

2. Turn OFF the devices that place load on the engine, such as the air conditioner.
   <Inspection procedure>
   (1) Select [Engine] on the screen of HINO DX II .
   (2) Select [Data monitor Setting] and [Active test Setting].
   (3) Select [Target rpm] from [Active test Setting] and set the engine revolution to 980 r/min.
   (4) Select [Injection quantity] from [Data monitor Setting].
   (5) Turn ON/OFF the exhaust brake switch, and check the difference between the injection quantity of the injector while the exhaust brake is working and the injection quantity when the exhaust brake is not actuated.

| Measurement conditions | Standard values |
|---|---|
| • **Engine revolution: 980 r/min**<br>• **Engine coolant temperature: 80 °C {176 °F} or more**<br>• **Turn OFF the air conditioner, and other devices that place load on the engine.** | **10 – 14 $mm^3$/st** |

**Do the measurements meet the standard value? (There shall be a change in the injection quantity between while the exhaust brake is working and when it is not actuated.)**

**YES**

**Go to step 4.**

**NO**

**Adjust the butterfly opening of the exhaust brake.**
**Perform "After-inspection work" of INFORMATION section.**

| 4 | Inspect fuel |
|---|---|

1. Open the fuel cap and check fuel for abnormality (in color is yellow or green).

**Was any failure found?**

**YES**

**Replace the fuel with good quality fuel.**
**Perform "After-inspection work" of INFORMATION section.**

**NO**

**Go to step 5.**

| 5 | **Inspect the exhaust gas temperature sensor 1 (ATC upstream) and the exhaust gas temperature sensor 2 (ATC downstream) connector** |
|---|---|

1. Check the connection of the exhaust gas temperature sensor 1 (ATC upstream) and the exhaust gas temperature sensor 2 (ATC downstream) connector (looseness and poor contact).

**Was any failure found?**

**YES**

**Connect securely, repair if needed.**
**Go to step 6.**

**NO**

**Go to step 6.**

| 6 | **Inspect the exhaust gas temperature sensor 1 (ATC upstream) and the exhaust gas temperature sensor 2 (ATC downstream)** |
|---|---|

1. Check the installation of the exhaust gas temperature sensor 1 (ATC upstream) and the exhaust gas temperature sensor 2 (ATC downstream).
2. Make sure there is no dirt, damage or clogging in the sensing unit of the exhaust gas temperature sensor 1 (ATC upstream) and the exhaust gas temperature sensor 2 (ATC downstream).

**Was any failure found?**

**YES**

**Clean the sensing unit and install it properly. If damaged, replace the exhaust gas temperature sensor 1 (ATC upstream) and the exhaust gas temperature sensor 2 (ATC downstream).**
**Go to step 7.**

**NO**

**Go to step 7.**

| 7 | **Inspect the exhaust gas temperature sensor 1 (ATC upstream) and the exhaust gas temperature sensor 2 (ATC downstream) unit** |
|---|---|

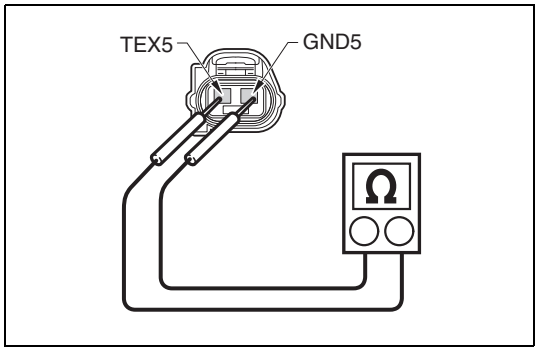


SAPH16F010300473

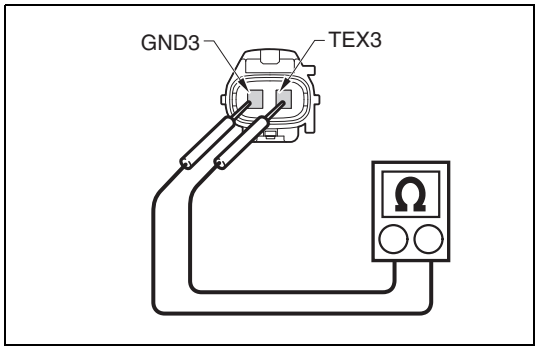


SAPH16F010300474

1. Set the starter switch to the "LOCK" position.
2. Disconnect the exhaust gas temperature sensor 1 (ATC upstream) and the exhaust gas temperature sensor 2 (ATC downstream) connector.
3. Use the electrical tester to measure the resistance between the terminals of the exhaust gas temperature sensor 1 (ATC upstream) and the exhaust gas temperature sensor 2 (ATC downstream).

| Measurement conditions | Tester connections | Standard values |
|---|---|---|
| **Starter switch: LOCK** | **Exhaust gas temperature sensor 1 (ATC upstream) TEX5 – GND5**<br>**Exhaust gas temperature sensor 2 (ATC downstream) vehicle-side connector TEX3 – GND3** | **20 °C {68 °F}: 13.7 – 29.8 kΩ**<br>**50 °C {122 °F}: 7.13 – 13.7 kΩ**<br>**80 °C {176 °F}: 4.1 – 7.13 kΩ** |

**Do the measurements meet the standard value?**

**YES**

**Go to step 8.**

**NO**

**Replace the exhaust gas temperature sensor 1 (ATC upstream) and the exhaust gas temperature sensor 2 (ATC downstream).**
**Go to step 8.**

| 8 | Inspect the sensor power supply |
|---|---|

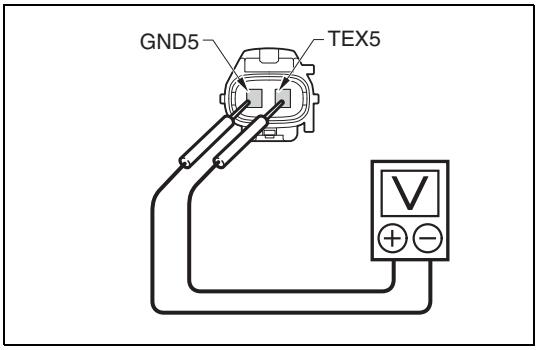


SAPH16F010300475

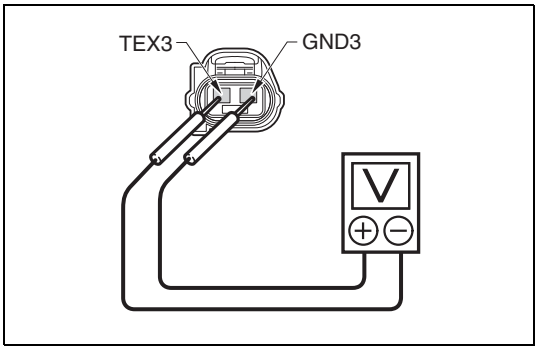


SAPH16F010300476

1. Set the starter switch to the "ON" position.
2. Use the electrical tester to measure the voltage between the terminals of the exhaust gas temperature sensor 1 (ATC upstream) and the exhaust gas temperature sensor 2 (ATC downstream) vehicle-side connector.

| Measurement conditions | Tester connections | Standard values |
|---|---|---|
| **Starter switch: ON** | **Exhaust gas temperature sensor 1 (ATC upstream) vehicle-side connector TEX5 – GND5**<br>**Exhaust gas temperature sensor 2 (ATC downstream) vehicle-side connector TEX3 – GND3** | **4.5 – 5.5 V** |

**Do the measurements meet the standard value?**

**YES**

**Go to step 11.**
**If any failure was found at the step 5 - 7, perform "After-inspection work" of INFORMATION section.**

**NO**

**Go to step 9.**

| 9 | **Inspect for short-circuit of the exhaust gas temperature sensor 1 (ATC upstream) and the exhaust gas temperature sensor 2 (ATC downstream) harness** |
|---|---|

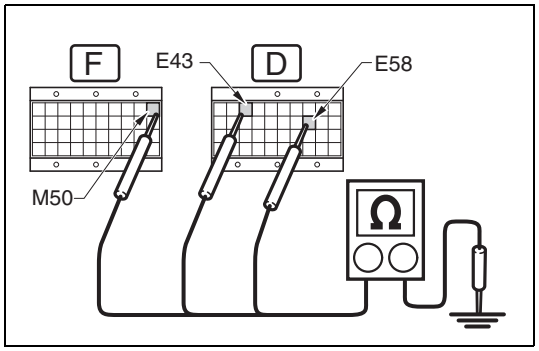

SAPH16F010300477

1. Set the starter switch to the "LOCK" position.
2. Connect the signal check harness to the engine ECU. (Do not connect harness to the ECU.)
3. Use the electrical tester to measure the resistance between the terminals of the engine ECU and ground.

| Measurement conditions | Tester connections | Standard values |
|---|---|---|
| **Starter switch: LOCK** | **Engine ECU (signal check harness) EXT+ (E43) – Ground AG5 (E58) – Ground KR2 (M50) – Ground** | **∞ Ω** |

**Do the measurements meet the standard value?**

**YES**

**Go to step 10.**

**NO**

**Repair or replace the harness.**
**Go to step 10.**

| 10 | **Inspect disconnection of the exhaust gas temperature sensor 1 (ATC upstream) and the exhaust gas temperature sensor 2 (ATC downstream) harness** |
|---|---|

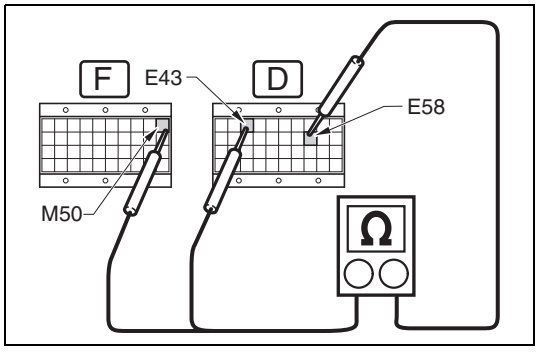

SAPH16F010300478

1. Connect the exhaust gas temperature sensor 1 (ATC upstream) and the exhaust gas temperature sensor 2 (ATC downstream)connector.
2. Use the electrical tester to measure the resistance between the terminals of the engine ECU (signal check harness).

| Measurement conditions | Tester connections | Standard values |
|---|---|---|
| **Starter switch: LOCK** | **Engine ECU (signal check harness) EXT+ (E43) – AG5 (E58) KR2 (M50) – AG5 (E58)** | **20 °C {68 °F}: 13.7 – 29.8 kΩ 50 °C {122 °F}: 7.13 – 13.7 kΩ 80 °C {176 °F}: 4.1 – 7.13 kΩ** |

**Do the measurements meet the standard value?**

| YES | NO |
|---|---|
| **Go to step 11.**<br>**If any failure was found at the step 5 - 9, perform "After-inspection work" of INFORMATION section.** | **Repair or replace the harness.**<br>**Perform "After-inspection work" of INFORMATION section.** |

| 11 | **Inspect the exhaust gas temperature sensor 3 (DOC inlet) connector** |
|---|---|

1. Check the connection of the exhaust gas temperature sensor 3 (DOC inlet) connector (looseness and poor contact).

**Was any failure found?**

| YES | NO |
|---|---|
| **Connect securely, repair if needed.**<br>**Go to step 12.** | **Go to step 12.** |

| 12 | **Inspect the exhaust gas temperature sensor 3 (DOC inlet)** |
|---|---|

1. Check the installation of the exhaust gas temperature sensor 3 (DOC inlet).
2. Make sure there is no dirt, damage or clogging in the sensing unit of the exhaust gas temperature sensor 3 (DOC inlet).

**Was any failure found?**

| YES | NO |
|---|---|
| **Clean the sensing unit and install it properly.**<br>**If damaged, replace the exhaust gas temperature sensor 3 (DOC inlet).**<br>**Go to step 13.** | **Go to step 13.** |

| 13 | Inspect the exhaust gas temperature sensor 3 (DOC inlet) unit |
|---|---|

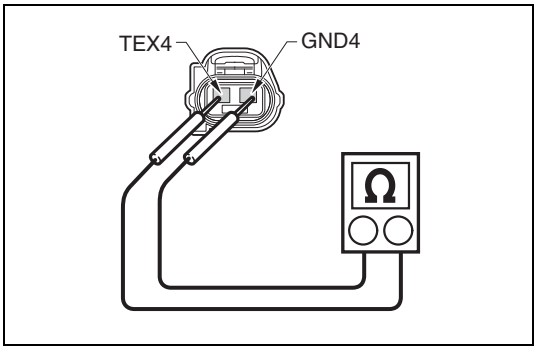


SAPH16F010300479

1. Set the starter switch to the "LOCK" position.
2. Disconnect the exhaust gas temperature sensor 3 (DOC inlet) connector.
3. Use the electrical tester to measure the resistance between the terminals of the exhaust gas temperature sensor 3 (DOC inlet).

| Measurement conditions | Tester connections | Standard values |
|---|---|---|
| Starter switch: LOCK | Exhaust gas temperature sensor 3 (DOC inlet) TEX4 – GND4 | 20 °C {68 °F}: 13.7 – 29.8 kΩ<br>50 °C {122 °F}: 7.13 – 13.7 kΩ<br>80 °C {176 °F}: 4.1 – 7.13 kΩ |

**Do the measurements meet the standard value?**

**YES**

**Go to step 14.**

**NO**

**Replace the exhaust gas temperature sensor 3 (DOC inlet).**
**Go to step 14.**

| 14 | Inspect the sensor power supply |
|---|---|

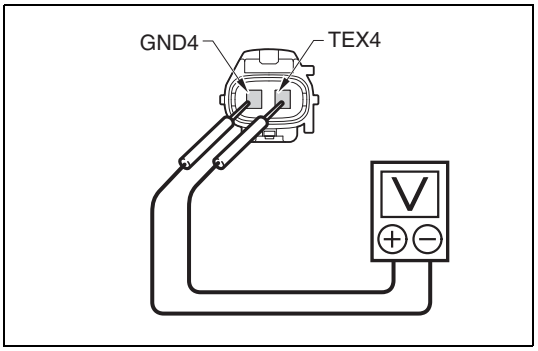


SAPH16F010300480

1. Set the starter switch to the "ON" position.
2. Use the electrical tester to measure the voltage between the terminals of the exhaust gas temperature sensor 3 (DOC inlet) vehicle-side connector.

| Measurement conditions | Tester connections | Standard values |
|---|---|---|
| Starter switch: ON | Exhaust gas temperature sensor 3 (DOC inlet) vehicle-side connector TEX4 – GND4 | 4.5 – 5.5 V |

**Do the measurements meet the standard value?**

YES

**Go to step 17.**
**If any failure was found at the step 11 - 13, perform "After-inspection work" of INFORMATION section.**

NO

**Go to step 15.**

## 15 Inspect for short-circuit of the exhaust gas temperature sensor 3 (DOC inlet) harness

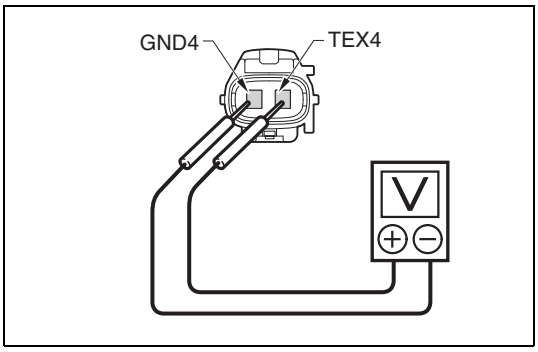

SAPH16F010300481

1. Set the starter switch to the "LOCK" position.
2. Connect the signal check harness to the engine ECU. (Do not connect harness to the ECU.)
3. Use the electrical tester to measure the resistance between the terminals of the engine ECU and ground.

| Measurement conditions | Tester connections | Standard values |
|---|---|---|
| Starter switch: LOCK | Engine ECU (signal check harness) ET2+ (V49) – Ground<br>AGD3 (V46) – Ground | ∞ Ω |

**Do the measurements meet the standard value?**

YES

**Go to step 16.**

NO

**Repair or replace the harness.**
**Go to step 16.**

## 16 Inspect disconnection of the exhaust gas temperature sensor 3 (DOC inlet) harness

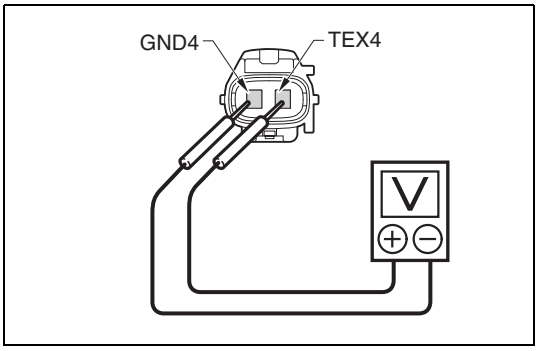

SAPH16F010300482

1. Connect the exhaust gas temperature sensor 3 (DOC inlet) connector.
2. Use the electrical tester to measure the resistance between the terminals of the engine ECU (signal check harness).

| Measurement conditions | Tester connections | Standard values |
|---|---|---|
| Starter switch: LOCK | Engine ECU (signal check harness) ET2+ (V49) – AGD3 (V46) | 20 °C {68 °F}: 13.7 – 29.8 kΩ<br>50 °C {122 °F}: 7.13 – 13.7 kΩ<br>80 °C {176 °F}: 4.1 – 7.13 kΩ |

**Do the measurements meet the standard value?**

**YES**

**Go to step 17.**
**If any failure was found at the step 11 - 15, perform "After-inspection work" of INFORMATION section.**

**NO**

**Repair or replace the harness.**
**Perform "After-inspection work" of INFORMATION section.**

| 17 | **Test drive** |
|---|---|

1. Set the starter switch to the "ON" position.
2. Change the [DPR soot amount] using the HINO DX II .
3. Set the starter switch to the "LOCK" position.
4. Monitor the [DPR mode] set.
5. Start the test drive.
6. Once the [DPR mode] reads any of "6, 7, 15, 23, 24, 27 or 28", bring vehicle speed to "0" and keep idling for 60 seconds.

| Measurement conditions | Standard values |
|---|---|
| During the DPR automatic regeneration | Vehicle interdiction → Vehicle start |

**Was DTC P0420 recorded on the combination meter?**

**YES**

**Replace the ATC.**

**NO**

**Procedure completed. (Temporary loose connection.)**

# DTC: P0422

EN01H16F01030F03001077

## P0422: DOC deterioration

INFORMATION

**1. Technical description**

**<Description of malfunction>**

- If the DOC is not generating heat or if the DOC is generating heat but temperature does not increase at the DOC outlet, the engine ECU detects DOC deterioration.

**2. DTC set condition**

(1) DTC detection condition

- Determined during completion of DPR regeneration with the engine running.
- The exhaust gas flow quantity is 150 kg/h or more.H9
- The engine revolution is 1,000 r/min or more.
- The fuel injection quantity is 30 $mm^3$/st or more.
  And, the conditions described below remain for 3 seconds.
- A change in the engine revolution is 625 r/min/sec or less.
- A change in the fuel injection quantity is 625 $mm^3$/sec/st or less.
- The vehicle speed is 18.8 mile/h or more.
  And, the conditions described below remain for 10 seconds.
- The predicted detection temperature of the exhaust gas temperature sensor 4 (DPR inlet) calculated by the engine ECU is 450 °C {842 °F} or more.

(2) Judgment criteria

- The temperature detected at the exhaust gas temperature sensor 4 (DPR inlet) remains 385 °C {725 °F} or less for 30 seconds.

**3. Reset condition**

- Immediately after normal status is resumed

**4. Indication, warning or system control regulation when the DTC is set.**

- MIL: ON
- SVS light: OFF

**5. Symptoms on the vehicle when the DTC is set**

**<Symptoms on the vehicle due to backup control (fail safe function)>**

- –

**<Symptoms on the vehicle due to malfunction>**

- –

**6. Pre-inspection work**

- Check that the battery voltage is in the normal range.

**7. After-inspection work**

- Clear all past DTCs.
- Check that no DTC is detected after test drive.

**8. Estimated failure factors**

- DOC deterioration caused by use of low-grade fuel
- Contamination in the sensing area of the exhaust gas temperature sensor 4 (DPR inlet), improper installation of sensors

## INSPECTION PROCEDURE: P0422

| 1 | Inspect fuel |
|---|---|

1. Open the fuel cap and check fuel for abnormality (in color and smell).

**Was any failure found?**

| YES | NO |
|---|---|
| **Replace the fuel with good quality fuel and then go to Step 2.** | **Go to step 3.** |

| 2 | Check the DTC detected [HINO DX II ] |
|---|---|

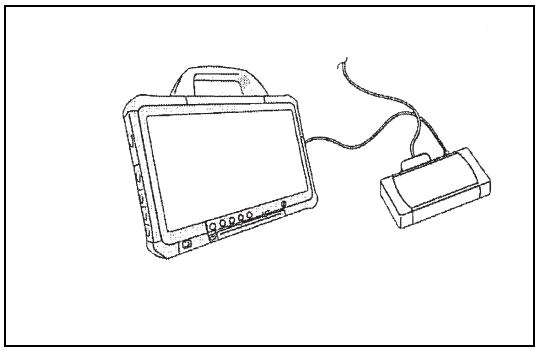

SAPH16F010300483

1. Set the starter switch to the "LOCK" position.
2. Connect the diagnostic system (HINO DX II ) to the vehicle.
3. Set the starter switch to the "ON" position.
4. Perform DPR manual regeneration.
5. After completion of regeneration, reload the DTC and check if the DTC P0422 has been detected.

**Has DTC P0422 been detected?**

| YES | NO |
|---|---|
| **Go to step 3.** | **Procedure completed.** |

| 3 | Inspect the exhaust gas temperature sensor 4 (DPR inlet) connector |
|---|---|

1. Inspect the exhaust gas temperature sensor 4 (DPR inlet) connector for improper connection (improper fitting and defective contact).

**Was any failure found?**

| YES | NO |
|---|---|
| **Connect securely, repair if necessary.** | **Go to step 4.** |

| 4 | **Inspect the exhaust gas temperature sensor 4 (DPR inlet)** |
|---|---|

1. Inspect the exhaust gas temperature sensor 4 (DPR inlet) for improper installation.
2. Check the sensing area of the exhaust gas temperature sensor 4 (DPR inlet) for dirt, clogging, and damage.

**Was any failure found?**

**YES**

**Clean the sensing area and install the sensor properly.**
**If damage is found, replace the sensor.**

**NO**

**Replace the DPR.**

# DTC: P0489 and P0490

EN01H16F01030F03001078

## P0489: EGR valve controller motor (open circuit) (EGR actuator motor open circuit)

INFORMATION

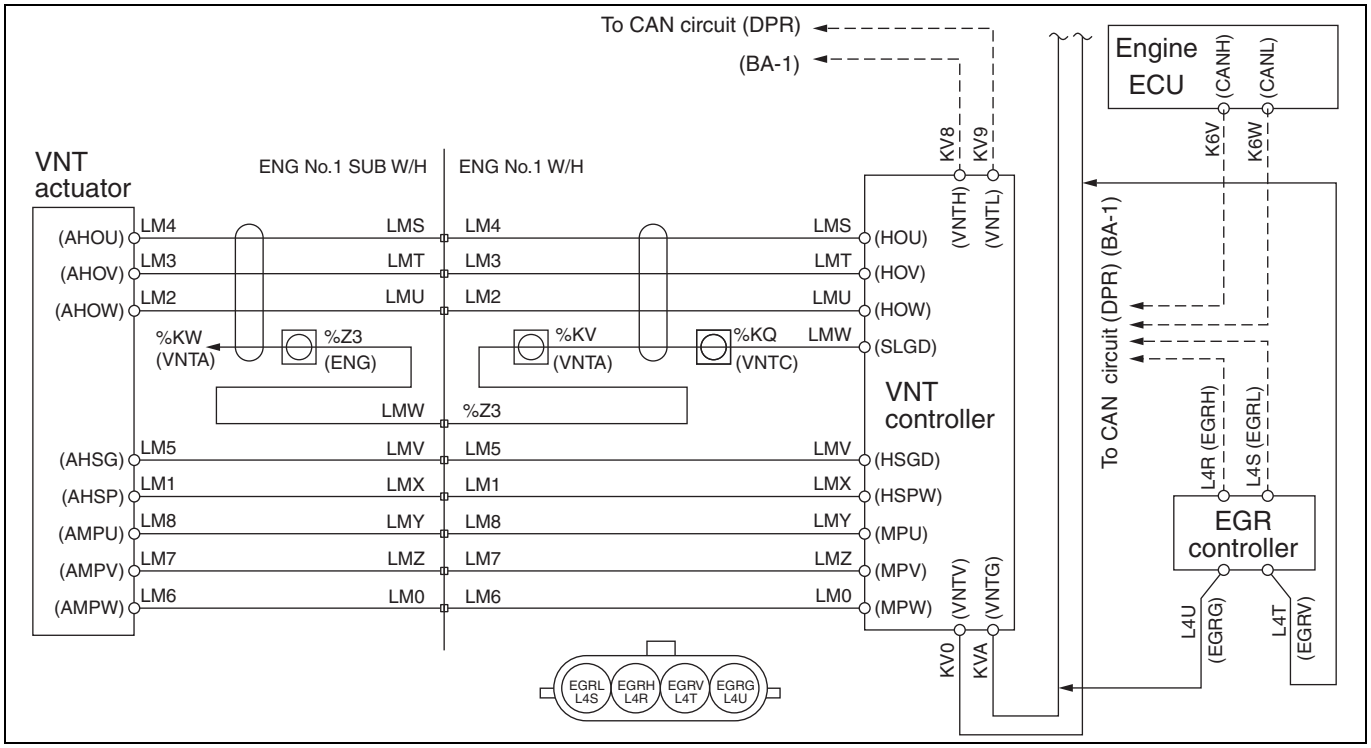


SAPH16F010300484

**1. Technical description**

- EGR valve is a butterfly type.
- EGR valve opening is controlled by engine speed and amount of intake air.
- EGR valve opening is adjusted by engine ECU and CAN communication.
- EGR valve will not operate when engine coolant temperature is low (≤ 40 °C {104 °F}).
- DTC is issued when failure message is received from EGR actuator unit.

**<Description of malfunction>**

- EGR actuator system is malfunctioning.

**2. DTC set condition**

(1) DTC detection condition

- Battery voltage is in the range of 8 V to 16 V.
- There is no disconnection in harness connected to EGR valve.
- Starter switch ON. (Not related to engine speed)

(2) Judgment criteria

- When the Open monitor signal of the high-side switch inside the EGR actuator detects a "Low" level condition for at least 1 second.

**3. Reset condition**

- When power is supplied again and judgment criteria are resolved.

**4. Indication, warning or system control regulation when the DTC is set.**

- MIL: ON
- SVS light: OFF
- Engine output is restricted.

**5. Symptoms on the vehicle when the DTC is set**

**<Symptoms on the vehicle due to backup control (fail safe function)>**

- Engine output is insufficient.

**<Symptoms on the vehicle due to malfunction>**

- –

**6. Pre-inspection work**

- Check that the battery voltage is in the normal range.

**7. After-inspection work**

- Clear all past DTCs.
- Check that no DTC is detected after test drive.

**8. Estimated failure factors**

- Damaged EGR actuator motor

## P0490: EGR valve controller motor (short circuit) (EGR actuator motor short circuit)

INFORMATION

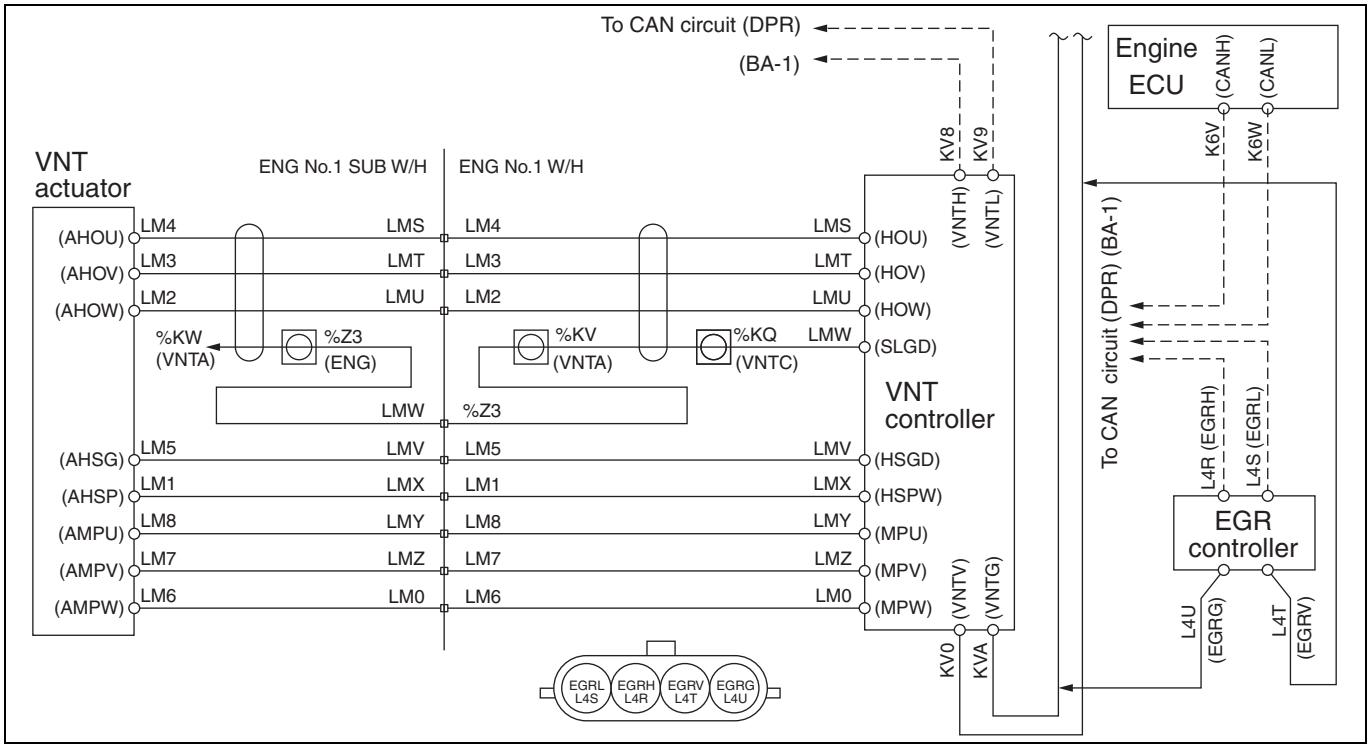


SAPH16F010300485

**1. Technical description**

- EGR valve is a butterfly type.
- EGR valve opening is controlled by engine speed and amount of intake air.
- EGR valve opening is adjusted by engine ECU and CAN communication.
- EGR valve will not operate when engine coolant temperature is low (≤ 40 °C).
- DTC is issued when failure message is received from EGR actuator unit.

**<Description of malfunction>**

- EGR actuator system is malfunctioning.

**2. DTC set condition**

(1) DTC detection condition

- Battery voltage is in the range of 8 V to 16 V.
- There is no disconnection in harness connected to EGR valve.
- Starter switch ON. (Not related to engine speed)

(2) Judgment criteria

- When the short-circuit monitor signal of the high-side switch inside the EGR actuator detects a "High" level condition for at least 1 second.

**3. Reset condition**

- When power is supplied again and judgment criteria are resolved.

**4. Indication, warning or system control regulation when the DTC is set.**

- MIL: ON
- SVS light: OFF
- Engine output is restricted.

**5. Symptoms on the vehicle when the DTC is set**

**<Symptoms on the vehicle due to backup control (fail safe function)>**

- Engine output is insufficient.

**<Symptoms on the vehicle due to malfunction>**

- –

**6. Pre-inspection work**

- Check that the battery voltage is in the normal range.

**7. After-inspection work**

- Clear all past DTCs.
- Check that no DTC is detected after test drive.

**8. Estimated failure factors**

- Damaged EGR actuator motor
- Abnormal battery voltage

## INSPECTION PROCEDURE: P0489 and P0490

| 1 | Check the DTC detected 1 (Engine ECU) [HINO DX II ] |
|---|---|

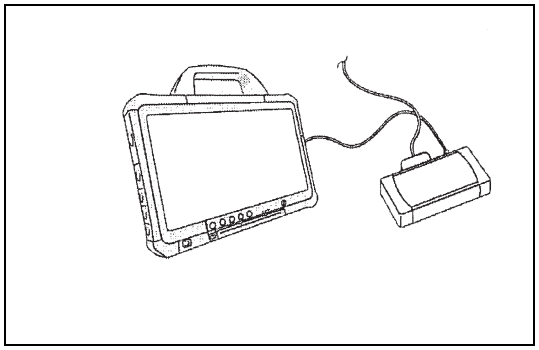

SAPH16F010300486

1. Set the starter switch to the "LOCK" position.
2. Connect the vehicle to HINO DX II .
3. Set the starter switch to the "ON" position.
4. Select [Engine] and check if any DTC other than DTC (P0489 or P0490) has been detected.

**Has a DTC other than DTC (P0489 or P0490) been detected?**

**YES**

**Go to diagnosis procedure of a related DTC.**

**NO**

**Go to step 2.**

| 2 | Inspect the EGR valve connector |
|---|---|

1. Check the connection of the EGR valve connector (Looseness and poor contact).

**Was any failure found?**

**YES**

**Connect securely, repair if needed.**
**Perform "After-inspection work" of INFORMATION section.**

**NO**

**Go to step 3.**

| 3 | Inspect the EGR valve power supply |
|---|---|

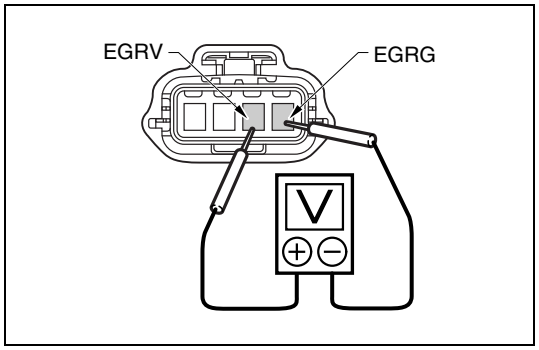


SAPH16F010300487

1. Set the starter switch to the "LOCK" position.
2. Disconnect the EGR valve connector.
3. Set the starter switch to the "ON" position.
4. Use the electrical tester to measure the voltage between the terminals of the EGR valve vehicle-side connector.

| Measurement conditions | Tester connections | Standard values |
|---|---|---|
| Starter switch: ON | EGR valve vehicle-side connector EGRV – EGRG | 8 – 16 V |

**Do the measurements meet the standard value?**

**YES**

**Replace the EGR valve, and go to step 4.**

**NO**

**Check the wire harness (actuator power supply and ground) and battery voltage.**
**Repair or replace parts as needed.**
**Perform "After-inspection work" of INFORMATION section.**

| 4 | **Check the DTC detected 2 (Engine ECU) [HINO DX ll ]** |
|---|---|

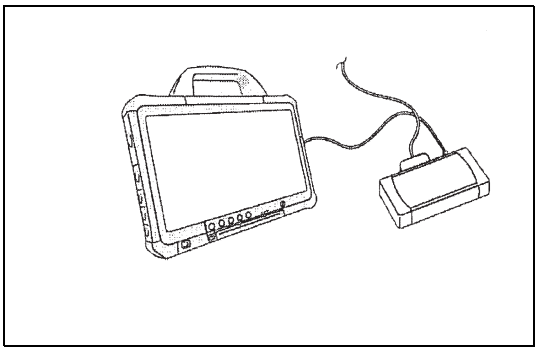

SAPH16F010300488

1. Set the starter switch to the "ON" position.
2. Select [Engine] and check if the DTC (P0489 or P0490) has been detected.

**Has DTC (P0489 or P0490) been detected?**

**YES**

**Replace the engine ECU.**
**Perform "After-inspection work" of INFORMATION section.**

**NO**

**Procedure completed.**
**Perform "After-inspection work" of INFORMATION section.**

# DTC: P049D

EN01H16F01030F03001079

## P049D: Position failure (EGR actuator wiping fault)

INFORMATION

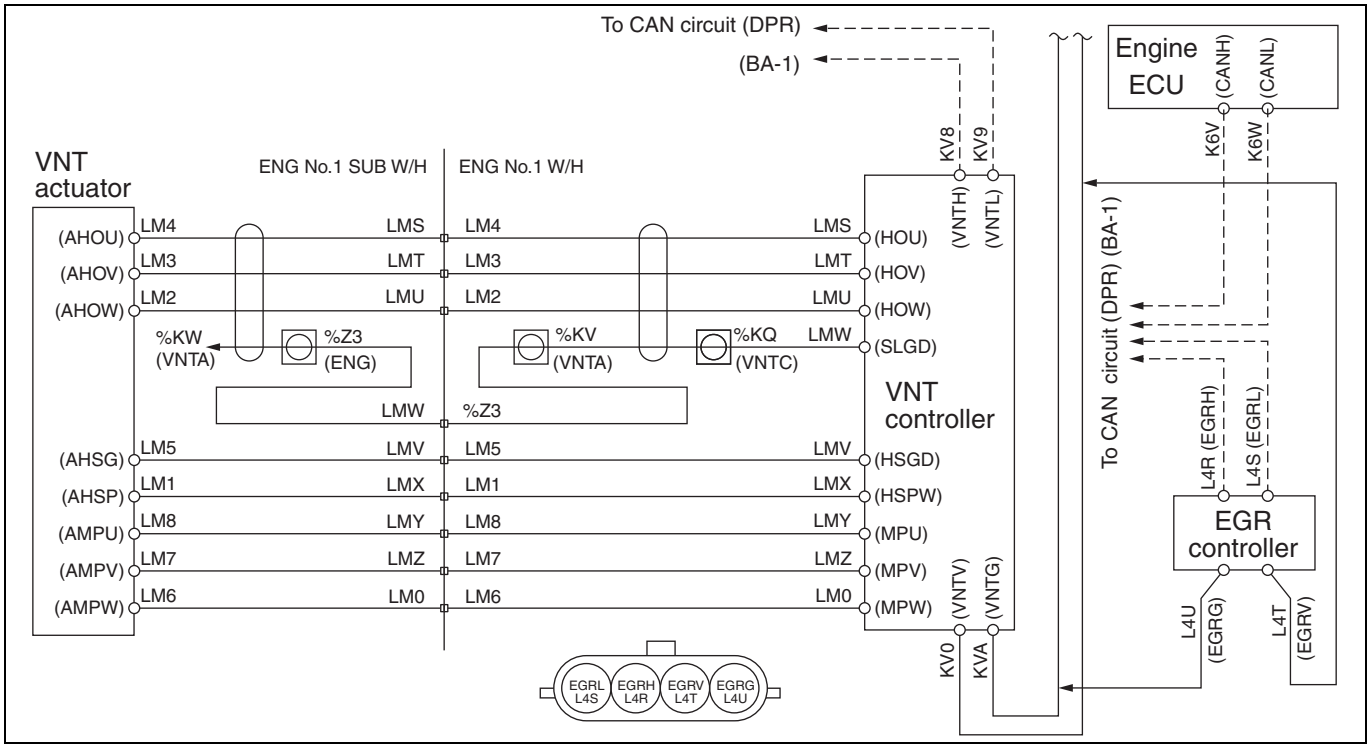


SAPH16F010300489

**1. Technical description**

- EGR valve is a butterfly type.
- EGR valve opening is controlled by engine speed and amount of intake air.
- EGR valve opening is adjusted by engine ECU and CAN communication.
- EGR valve will not operate when engine coolant temperature is low (≤ 40 °C {104 °F})
- Wiping operation from "fully open → fully closed" is conducted as an EGR valve surface cleaning operation when the starter switch is LOCK.

**<Description of malfunction>**

- Failure message is received from EGR controller.

**2. DTC set condition**

(1) DTC detection condition

- Battery voltage is in the range of 8 V to 16 V.
- There is no disconnection in harness connected to EGR valve.
- Starter switch ON. (Not related to engine speed.)

(2) Judgment criteria

- When wiping (valve opens and closes with starter switch LOCK) results in valve moving 10 ° beyond the learned value in the closing direction.

**3. Reset condition**

- Just after restoration to normal condition.

**4. Indication, warning or system control regulation when the DTC is set.**

- MIL: ON
- SVS light: OFF
- Engine output is restricted.

**5. Symptoms on the vehicle when the DTC is set**

**<Symptoms on the vehicle due to backup control (fail safe function)>**

- Engine output is insufficient.

**<Symptoms on the vehicle due to malfunction>**

- –

**6. Pre-inspection work**

- Check that the battery voltage is in the normal range.

**7. After-inspection work**

- Clear all past DTCs.
- Check that no DTC is detected after test drive.

**8. Estimated failure factors**

- Disconnected or bent EGR valve link.
- Valve or valve seat has come off.

## INSPECTION PROCEDURE: P049D

| 1 | Check the DTC detected [HINO DX II ] |
|---|---|

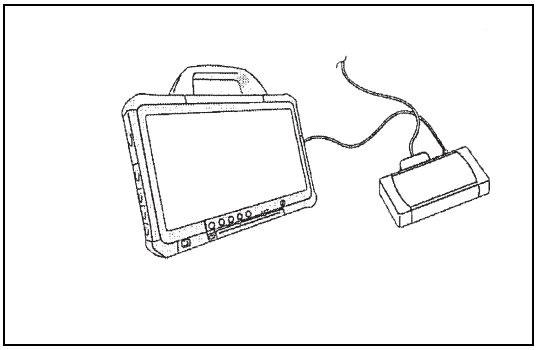

SAPH16F010300490

1. Set the starter switch to the "LOCK" position.
2. Connect the vehicle to HINO DX II .
3. Set the starter switch to the "ON" position.
4. Select [Engine] and check if any DTC other than P049D has been detected

**Has a DTC other than P049D been detected?**

**YES**

**Go to the diagnosis procedure of a related DTC.**

**NO**

**Go to step 2.**

| 2 | Inspect the EGR valve |
|---|---|

1. Check if the link joining the actuator and valve unit is disconnected or bent.
2. Check if there is soot obstructing the exhaust gas passageway inlet or outlet.
3. Check if the valve or valve seat has come off.
4. Manually push the actuator-side lever and check if the valve opens and closes.

**Was any failure found?**

**YES**

**Remove foreign substances and clean the EGR valve.**
**Replace the EGR valve if it is damaged.**
**Perform "After-inspection work" of INFORMATION section.**

**NO**

**Go to step 3.**

| 3 | Inspect the EGR valve connector |
|---|---|

1. Check the connection of the EGR valve connector (Looseness and poor contact).

**Was any failure found?**

**YES**

**Connect securely, repair if needed.**
**Perform "After-inspection work" of INFORMATION section.**

**NO**

**Go to step 4.**

| 4 | Inspect the EGR valve power supply |
|---|---|

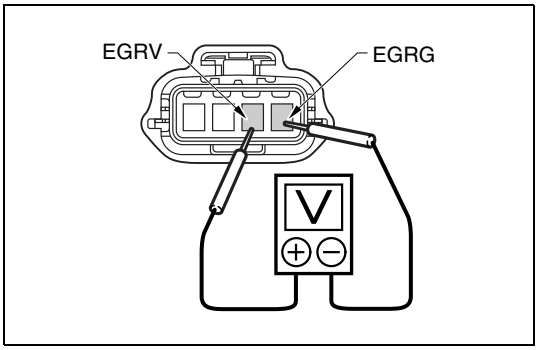


SAPH16F010300491

1. Set the starter switch to the "LOCK" position.
2. Disconnect the EGR valve.
3. Set the starter switch to the "ON" position.
4. Use the electrical tester to measure the voltage between the terminals of the EGR valve vehicle-side connector.

| Measurement conditions | Tester connections | Standard values |
|---|---|---|
| Starter switch: ON | EGR valve vehicle-side connector EGRV – EGRG | 8 – 16 V |

**Do the measurements meet the standard value?**

**YES**

**Go to step 5.**

**NO**

**Check the wire harness (actuator power supply and ground) and battery voltage. If necessary, repair or replace.**
**Perform "After-inspection work" of INFORMATION section.**

| 5 | Check the response delay of the EGR valve [HINO DX II ] |
|---|---|

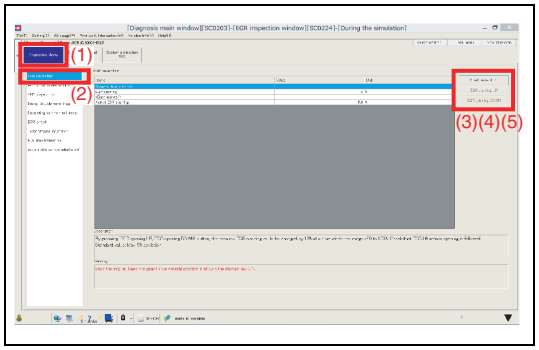


SAPH16F010300492

1. Select [Inspection Menu] and check the time lag (following characteristics) of the target EGR valve opening and actual EGR valve opening.

**⚠ CAUTION**
**Perform the inspection while the engine is stopped to avoid engine damages.**

<Inspection procedure>
(1) Select [Inspection Menu].
(2) Select [EGR inspection].
(3) Click [Start inspection].
(4) Click [EGR opening UP]:
• Check each step from 0 % – 100 % of the time lag (following characteristics) of the target EGR valve opening and actual EGR valve opening.
(5) Click [EGR opening DOWN]:
• Check each step from 100 % – 0 % of the time lag (following characteristics) of the target EGR valve opening and actual EGR valve opening.

**HINT**
**In EGR openings from 0 % – 100 %, 1 step corresponds to a 10 % change.**

| Standard values |
|---|
| The response delay should be less than 5 seconds. |

**Do the measurements meet the standard value?**

**YES**

**Replace the engine ECU.**
**Perform "After-inspection work" of INFORMATION section.**

**NO**

**Replace the EGR valve.**
**Perform "After-inspection work" of INFORMATION section.**

# DTC: P04D5 and P04D6

EN01H16F01030F03001080

## P04D5: Exhaust brake MV output open load/short to GND

INFORMATION

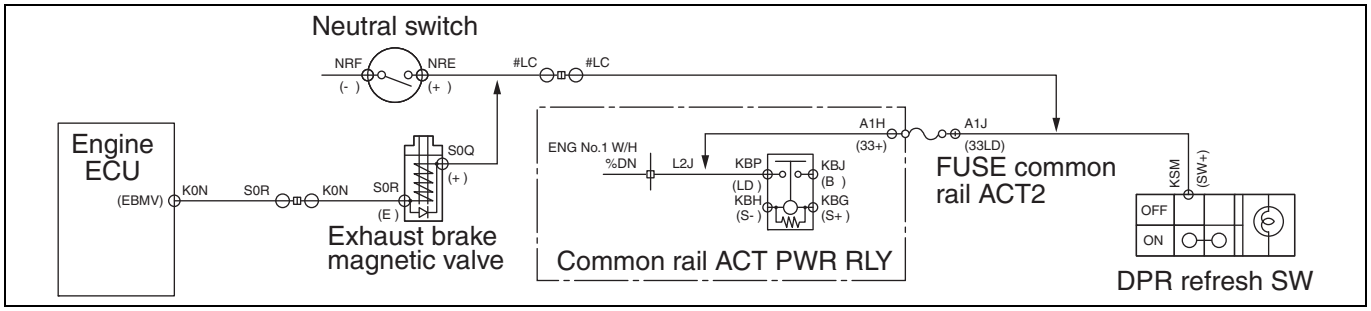


SAPH16F010300493

**1. Technical description**

- –

**<Description of malfunction>**

- Exhaust brake magnetic valve is not working properly.
- Possible magnetic valve failure or GND short-circuit

**2. DTC set condition**

(1) DTC detection condition

- Exhaust brake inactivity request is in progress.
- Starter switch ON. (starter does not operate).
- Battery voltage is in the range of 10 V to 16 V.

The conditions described above remain for 5 seconds or longer.

(2) Judgment criteria

- Exhaust brake magnetic valve circuit voltage is 2.8 V or lower.
- Failure determination time: at least 3 seconds

**3. Reset condition**

- Immediately after normal operation is restored.

**4. Indication, warning or system control regulation when the DTC is set.**

- MIL: ON
- SVS light: OFF

**5. Symptoms on the vehicle when the DTC is set**

**<Symptoms on the vehicle due to backup control (fail safe function)>**

- –

**<Symptoms on the vehicle due to malfunction>**

- Exhaust brake is in operation.

**6. Pre-inspection work**

- Check that the battery voltage is in the normal range.

**7. After-inspection work**

- Clear all past DTCs.
- Check that no DTC is detected after test drive.

**8. Estimated failure factors**

- GND short-circuit in exhaust brake drive signal line
- Malfunction of exhaust brake magnetic valve
- Malfunction of engine ECU

## P04D6: Exhaust brake MV output short to BATT

INFORMATION

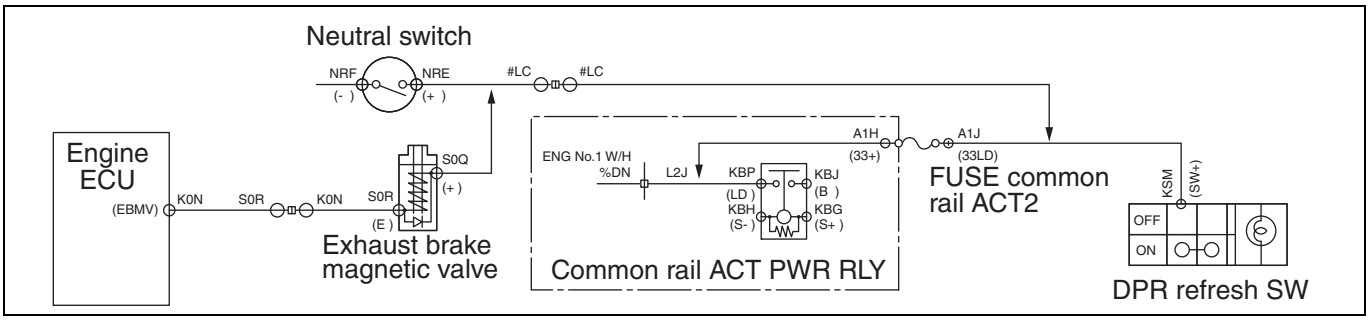


SAPH16F010300494

**1. Technical description**

- –

**<Description of malfunction>**

- Exhaust brake magnetic valve is not working properly.
- Possible magnetic valve failure or +B short-circuit or disconnection

**2. DTC set condition**

(1) DTC detection condition

- Exhaust brake inactivity request is in progress.
- Starter switch ON. (starter does not operate).
- Battery voltage is in the range of 10 V to 16 V.

The conditions described above remain for 5 seconds or longer.

(2) Judgment criteria

- Exhaust brake magnetic valve circuit voltage is 3 V or higher.
- Failure determination time: at least 3 seconds

**3. Reset condition**

- Immediately after normal operation is restored.

**4. Indication, warning or system control regulation when the DTC is set.**

- MIL: ON
- SVS light: OFF

**5. Symptoms on the vehicle when the DTC is set**

**<Symptoms on the vehicle due to backup control (fail safe function)>**

- –

**<Symptoms on the vehicle due to malfunction>**

- Exhaust brake operates at all times (or does not operate when operation request is received).

**6. Pre-inspection work**

- Check the trouble diagnostic system and make sure it is okay.
- Check the battery voltage and make sure it is okay.

**7. After-inspection work**

- Clear all past DTCs.
- Check that no DTC is detected after test drive.

**8. Estimated failure factors**

- +B short-circuit or disconnection in exhaust brake drive signal line.
- Malfunction of exhaust brake magnetic valve.
- Malfunction of engine ECU.

## INSPECTION PROCEDURE: P04D5 and P04D6

| 1 | **Inspect the exhaust brake magnetic valve connector** |
|---|---|

1. Check the connection of the exhaust brake magnetic valve connector (Looseness and poor contact).

**Was any failure found?**

**YES**

**Connect securely, repair if needed.**
**Perform "After-inspection work" of INFORMATION section.**

**NO**

**Go to step 2.**

| 2 | **Inspect the exhaust brake magnetic valve** |
|---|---|

1. Check the installation of the exhaust brake magnetic valve.

**Was any failure found?**

**YES**

**Install the exhaust brake magnetic valve correctly.**
**Replace the exhaust brake magnetic valve if it is damaged.**
**Perform "After-inspection work" of INFORMATION section.**

**NO**

**Go to step 3.**

## 3 Inspect the exhaust brake magnetic valve unit

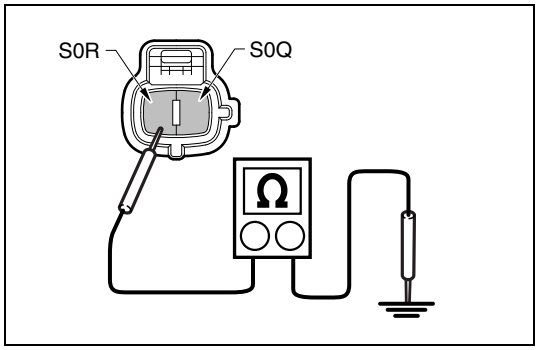

SAPH16F010300495

1. Set the starter switch to the "LOCK" position.
2. Disconnect the exhaust brake magnetic valve connector.
3. Use the electrical tester to measure the resistance between the terminals of the exhaust brake magnetic valve.

| Measurement conditions | Tester connections | Standard values |
|---|---|---|
| Starter switch: LOCK | Exhaust brake magnetic valve S0R – S0Q | 8.3 – 18.3 Ω |

**Do the measurements meet the standard value?**

**YES**

**Go to step 4.**

**NO**

**Replace the exhaust brake magnetic valve. Perform "After-inspection work" of INFORMATION section.**

## 4 Inspect for power – circuit of the exhaust brake magnetic valve

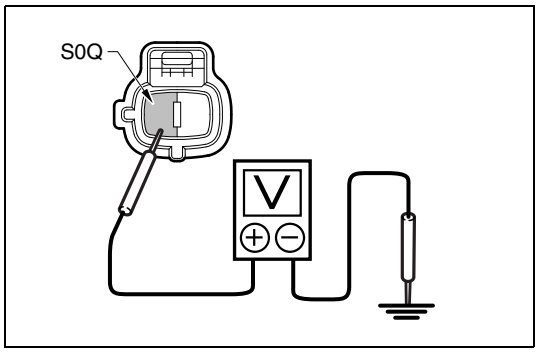

SAPH16F010300496

1. Set the starter switch to the "ON" position.
2. Using the electrical tester, measure the pressure between the exhaust brake magnetic valve vehicle-side connector S0Q terminal and ground.

| Measurement conditions | Tester connections | Standard values |
|---|---|---|
| Starter switch: ON | Exhaust brake magnetic valve vehicle-side connector S0Q – Ground | 10 – 16 V |

**Do the measurements meet the standard value?**

**YES**

**Go to step 5.**

**NO**

**Repair or replace the wire harness between the fuse (Common rail actuator 2) and the magnetic valve.**

## 5 Inspect for short-circuit of the exhaust brake magnetic valve harness

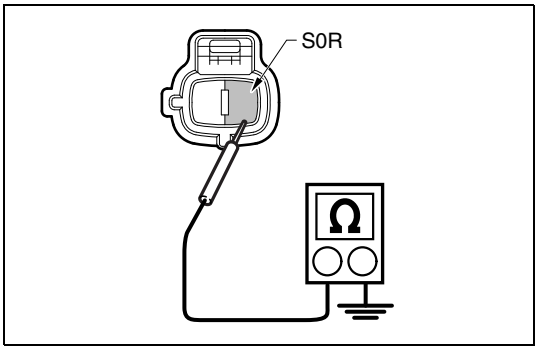


SAPH16F010300497

1. Disconnect the engine ECU connector.
2. Use the electrical tester to measure the resistance between the terminals of the exhaust brake magnetic valve vehicle-side connector and ground.

| Measurement conditions | Tester connections | Standard values |
|---|---|---|
| Starter switch: LOCK | Exhaust brake magnetic valve vehicle-side connector<br>S0R – Ground | ∞ Ω |

**Do the measurements meet the standard value?**

**YES**

**Go to step 6.**

**NO**

**Repair or replace the harness.**
**Perform "After-inspection work" of INFORMATION section.**

## 6 Inspect disconnection of the exhaust brake magnetic valve harness

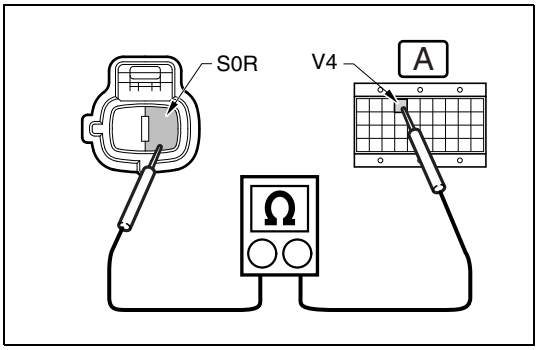


SAPH16F010300498

1. Connect the signal check harness to the engine ECU.
2. Use the electrical tester to measure the resistance between the terminals of the exhaust brake magnetic valve vehicle-side connector and the engine ECU.

| Measurement conditions | Tester connections | Standard values |
|---|---|---|
| Starter switch: LOCK | Exhaust brake magnetic valve vehicle-side connector – Engine ECU (signal check harness)<br>S0R – EXB(V4) | 1 Ω or less |

**Do the measurements meet the standard value?**

**YES**

**Go to step 7.**

**NO**

**Repair or replace the harness.**
**Perform "After-inspection work" of INFORMATION section.**

| 7 | Check the DTC detected (Engine ECU) |
|---|---|

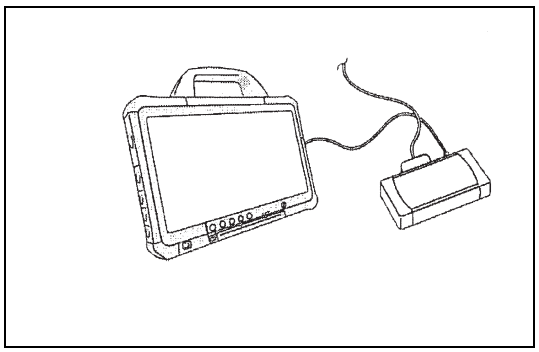

SAPH16F010300499

1. Stop the engine and set the starter switch to the "LOCK" position.
2. Connect the vehicle to HINO-DX II .
3. Set the starter switch to the "ON" position.
4. Select [Engine] and check if the DTC (P04D5 or P04D6) has been detected.

**Has DTC (P04D5 or P04D6) been detected?**

**YES**

**Replace the engine ECU.**
**Perform "After-inspection work" of INFORMATION section.**

**NO**

**Procedure completed.**
**Perform "After-inspection work" of INFORMATION section.**

# DTC: P04DA

EN01H16F01030F03001081

## P04DA: EGR system feedback control

INFORMATION

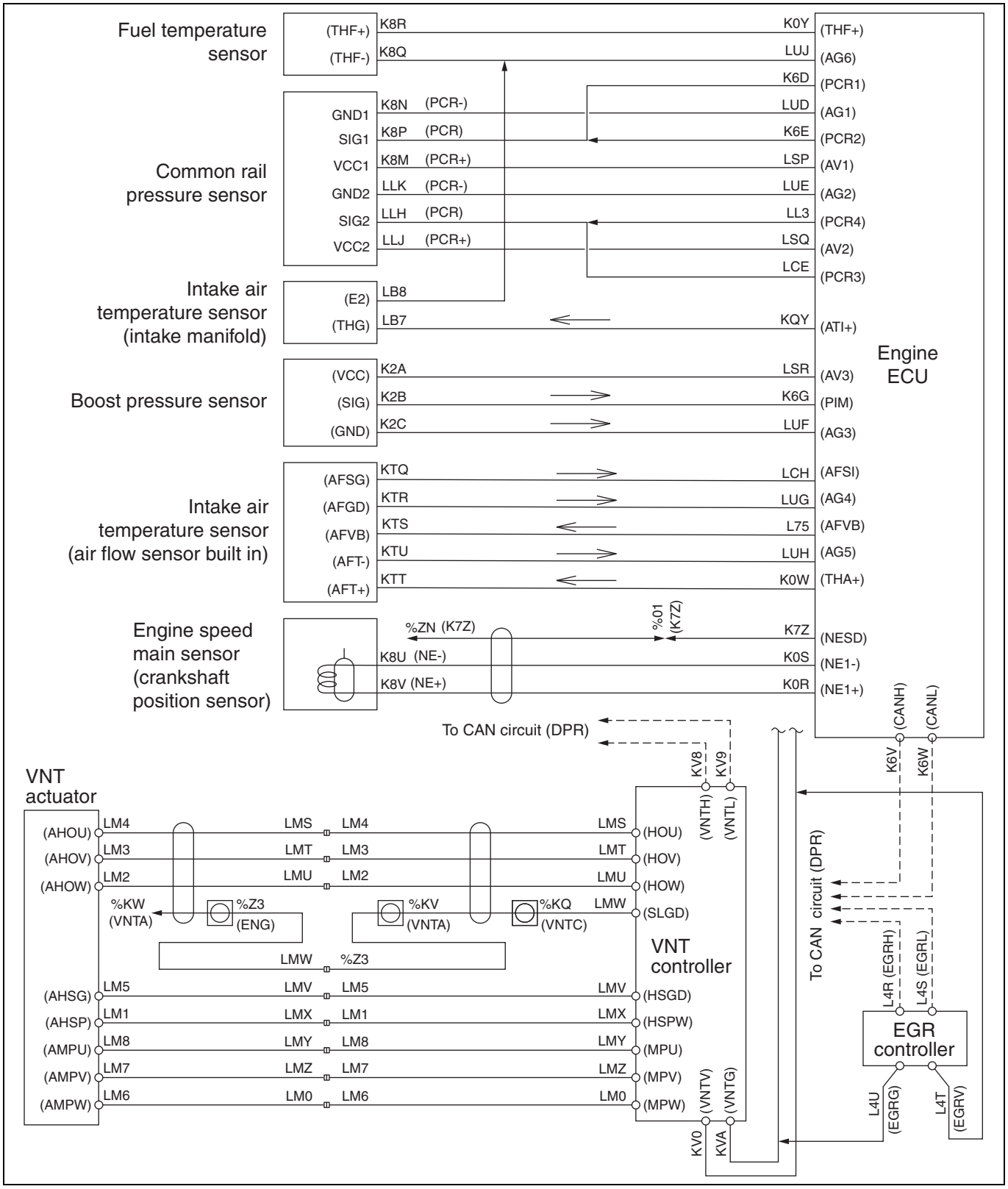


SAPH16F010300500

**1. Technical description**

- EGR valve is a butterfly type.
- EGR valve opening is controlled by engine speed and amount of intake air.
- EGR valve opening is adjusted by engine ECU and CAN communication.
- EGR valve will not operate when coolant temperature is low (≤ 30 °C {86 °F}).
- Engine ECU calculates the actual EGR quantity based on information from the boost pressure sensor, engine speed sensor, intake air temperature sensor (intake manifold), and air flow sensor.
- Engine ECU compares the actual EGR quantity and the theoretical EGR quantity stored in the ECU memory.

**<Description of malfunction>**

- EGR quantity may be over-applied.

**2. DTC set condition**

(1) DTC detection condition

- Battery voltage is in the range of 10 V to 16 V.
- There is no disconnection in harness connected to EGR valve.
- Engine is running at speed higher than idling speed.
- EGR feedback (value of theoretical EGR quantity - actual EGR rate) stays above the threshold value for at least 30 seconds.

(2) Judgment criteria

- When EGR feedback (value of theoretical EGR quantity - actual EGR rate) stays above the threshold value for at least 30 seconds.
- Above criterion is determined from the boost pressure, intake manifold temperature, air intake quantity, fuel injection rate, and engine speed.

**3. Reset condition**

- After normal operation is restored and the starter switch is turned to LOCK.

**4. Indication, warning or system control regulation when the DTC is set.**

- MIL: ON
- SVS light: OFF
- Engine output is restricted.

**5. Symptoms on the vehicle when the DTC is set**

**<Symptoms on the vehicle due to backup control (fail safe function)>**

- EGR valve is fully closed.

**<Symptoms on the vehicle due to malfunction>**

- Faulty engine revving (engine hesitation)
- Insufficient output or engine stall because of DPR clogging due to faulty catalyst regeneration

**6. Pre-inspection work**

- Check that the battery voltage is in the normal range.

**7. After-inspection work**

- Clear all past DTCs.
- Check that no DTC is detected after test drive.

**8. Estimated failure factors**

- Intake air temperature sensor (intake manifold) failure
- Air flow sensor failure
- Boost pressure sensor failure
- Injector failure
- EGR valve failure
- Clogged intake system
- VNT controller failure

## INSPECTION PROCEDURE: P04DA

| 1 | Check the response delay of the EGR valve [HINO DX II ] |
|---|---|

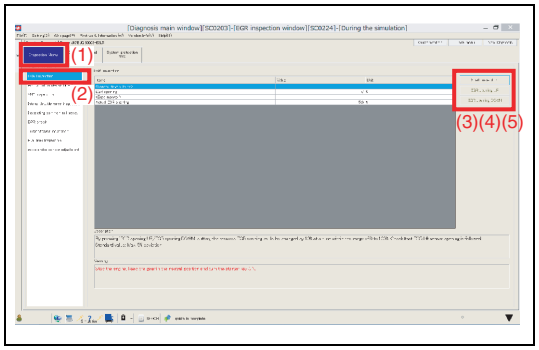


SAPH16F010300501

1. Set the starter switch to the "LOCK" position.
2. Connect the vehicle to HINO DX II .
3. Set the starter switch to the "ON" position.
4. Select [Inspection Menu] and then [EGR inspection] from the menu, then inspect the response delay at the Target EGR position and Actual EGR position.

**⚠ CAUTION**
**Perform the inspection while the engine is stopped to avoid damages.**

<Inspection procedure>
(1) Select [Inspection Menu].
(2) Select [VNT inspection].
(3) Click [Start inspection].
(4) Select [VNT UP]:
• Inspect the response delay at each step of the Target VNT position and Actual VNT position from 0 to 90 %.
(5) Select [VNT DOWN]:
• Inspect the response delay at each step of the Target VNT position and Actual VNT position from 90 to 0 %.

**HINT**
**The EGR opening position changes of around 10 % per step between 0 – 90 %.**

| Standard values |
|---|
| **From the Target EGR position to the Actual EGR position, the response delay should be within 5 seconds.** |

**Do the measurements meet the standard value?**

**YES**

**Go to step 2.**

**NO**

**Replace the EGR valve.**
**Perform "After-inspection work" of INFORMATION section.**

| 2 | Check the response delay of the VNT controller [HINO DX II ] |
|---|---|

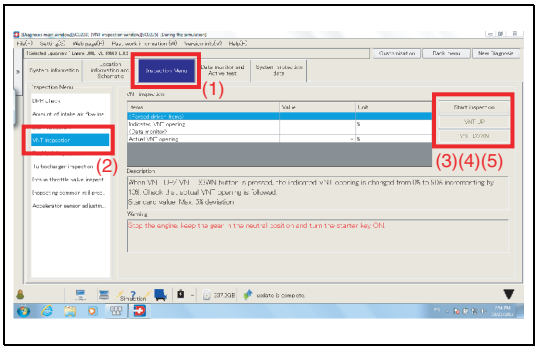


SAPH16F010300502

1. Select [Inspection Menu] from the menu, then inspect the response delay at the Target VNT position and Actual VNT position.

**⚠ CAUTION**
**Perform the inspection while the engine is stopped to avoid damages.**

<Inspection procedure>
(1) Select [Inspection Menu].
(2) Select [EGR inspection].
(3) Click [Start inspection].
(4) Click [EGR opening UP]:
• Inspect the response delay at each step of the Target EGR position and Actual EGR position from 0 to 100 %.
(5) Click [EGR opening DOWN]:
• Inspect the response delay at each step of the Target EGR position and Actual EGR position from 100 to 0 %.

**HINT**
**The VNT opening position changes of around 10 % per step between 0 – 90 %.**

| Standard values |
|---|
| **From the Target VNT position to the Actual VNT position, the response delay should be within 3 seconds.** |

**Do the measurements meet the standard value?**

| YES | NO |
|---|---|
| **Go to step 3.** | **Replace the turbocharger. Perform "After-inspection work" of INFORMATION section.** |

| 3 | Inspect the air cleaner element |
|---|---|

1. Check the air cleaner element for dirt, clogging, or damage.
2. Make sure the element is a Hino genuine part.

**Was any failure found?**

| YES | NO |
|---|---|
| **Clean or replace the air cleaner element. Perform "After-inspection work" of INFORMATION section.** | **Go to step 4.** |

| 4 | Inspect the air flow sensor |
|---|---|

1. Check the installation of the air flow sensor.
2. Make sure there is no dirt or damage to the air flow sensor.

**Was any failure found?**

| YES | NO |
|---|---|
| **If damaged, replace the air flow sensor. Perform "After-inspection work" of INFORMATION section.** | **Go to step 5.** |

| 5 | Inspect the air flow sensor connector |
|---|---|

1. Check the connection of the air flow sensor connector (Looseness and poor contact).

**Was any failure found?**

| YES | NO |
|---|---|
| **Connect securely, repair if needed. Perform "After-inspection work" of INFORMATION section.** | **Go to step 6.** |

| 6 | Check the air intake system |
|---|---|

1. Check the air intake system (between air flow sensor and diesel throttle) for dirt, clogging, or damage.

**Was any failure found?**

| YES | NO |
|---|---|
| **Clean or replace parts as needed. Perform "After-inspection work" of INFORMATION section.** | **Go to step 7.** |

| 7 | Inspect the boost pressure sensor |
|---|---|

1. Check the installation of the boost pressure sensor.
2. Make sure there is no dirt or damage to the boost pressure sensor.

**Was any failure found?**

| YES | NO |
|---|---|
| **Clean the boost pressure sensor and install it properly.<br>If damaged, replace the boost pressure sensor.<br>Perform "After-inspection work" of INFORMATION section.** | **Go to step 8.** |

| 8 | Inspect the intake air temperature sensor (intake manifold) connector |
|---|---|

1. Check the connection of the intake air temperature sensor (intake manifold) connector (Looseness and poor contact).

**Was any failure found?**

| YES | NO |
|---|---|
| **Connect securely, repair if needed.<br>Perform "After-inspection work" of INFORMATION section.** | **Go to step 9.** |

| 9 | Inspect the intake air temperature sensor (intake manifold) |
|---|---|

1. Check the installation of the intake air temperature sensor (intake manifold).
2. Make sure there is no dirt or damage to the intake air temperature sensor (intake manifold).

**Was any failure found?**

| YES | NO |
|---|---|
| **Clean the intake air temperature sensor (intake manifold) and install it properly.<br>If damaged, replace the intake air temperature sensor (intake manifold).<br>Perform "After-inspection work" of INFORMATION section.** | **Go to step 10.** |

| 10 | Inspect the intake air temperature sensor (intake manifold) unit |
|---|---|

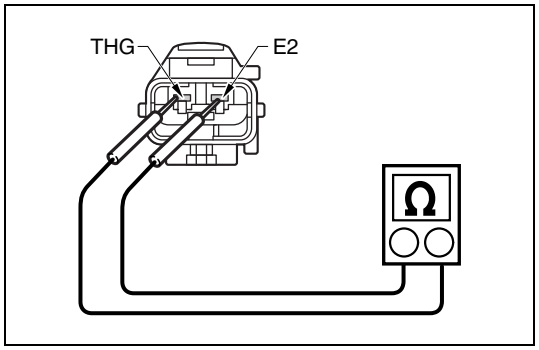

SAPH16F010300503

1. Set the starter switch to the "LOCK" position.
2. Disconnect the intake air temperature sensor (intake manifold) connector.
3. Use the electrical tester to measure the resistance between the terminals of the intake air temperature sensor (intake manifold).

| Measurement conditions | Tester connections | Standard values |
|---|---|---|
| Starter switch: LOCK | Intake air temperature sensor (intake manifold) THG – E2 | 20 °C {68 °F}: 7.336 – 5.794 kΩ 50 °C {122 °F}: 2.435 – 1.994 kΩ |

**Do the measurements meet the standard value?**

**YES**

**Go to step 11.**

**NO**

**Replace the intake air temperature sensor (intake manifold).**
**Perform "After-inspection work" of INFORMATION section.**

| 11 | Inspect the EGR valve |
|---|---|

1. Check the EGR valve for damage due to foreign substances.
2. Check if there is soot obstructing the exhaust gas passageway inlet or outlet.

**Was any failure found?**

**YES**

**Remove foreign substances and clean the valve.**
**Replace the EGR valve if it is damaged.**
**Perform "After-inspection work" of INFORMATION section.**

**NO**

**Go to step 12.**

| 12 | Inspect the injector [HINO DX II ] |
|---|---|

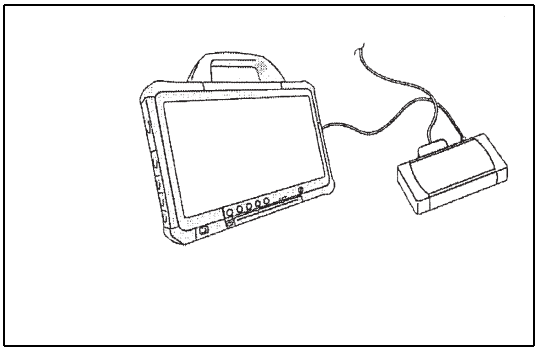

SAPH16F010300504

Check the injection quantity and the rotational fluctuation.

1. Start the engine

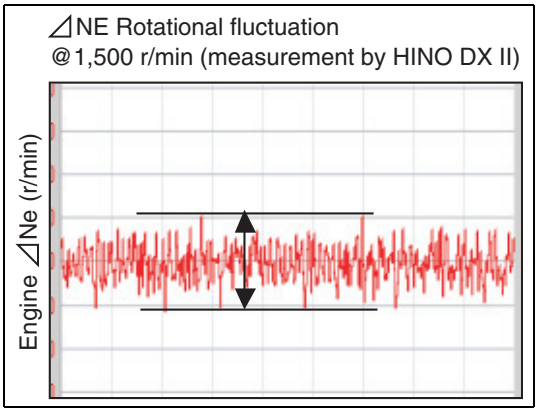


SAPH16F010300505

2. Select [Injection quantity] from the [Data monitor Setting] menu, and measure the amount of fuel injection.

3. Select [Engine speed] from the [Data monitor Setting] menu, and measure the rotational fluctuation.

| Measurement conditions |
|---|
| **Engine speed: 1,500 r/min No-load,<br>T/M shift lever: Neutral position, A/C off and Air compressor non operating.<br>Engine coolant temperature: more than 80 °C {176 °F}** |

**Standard values**

| Type of | Q ($mm^3$/st) | ⊿Ne (r/min) |
|---|---|---|
| MT | 5.0q ≤ | ≤ 15 |
| Allison® 2200 | 6.0q ≤ | |
| Allison® 2500 | | |
| Allison® 3500 | | |

**Do the measurements meet the standard value? (Both the injection quantity and the rotational fluctuation are within the standard values)**

**YES**

**Go to step 13.**

**NO**

**Replace the injector.
Perform "After-inspection work" of INFORMATION section.**

| 13 | Check the DTC detected (Engine ECU) [HINO DX ll ] |
|---|---|

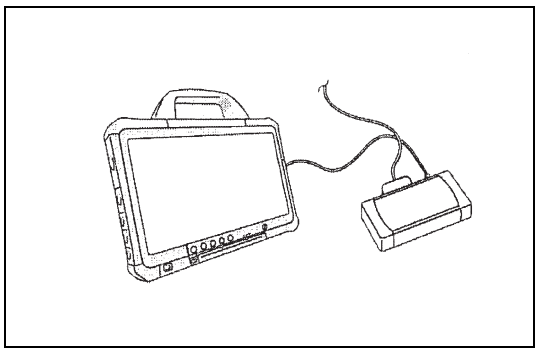

SAPH16F010300507

1. Perform engine warm-up. (engine coolant temperature: 60 °C {140 °F} or more)
2. Stop the engine.
3. Set the starter switch to the "ON" position.
4. Select [Engine] and check if P04DA has been detected.

**Has DTC P04DA been detected?**

**YES**

**Replace the engine ECU.**
**Perform "After-inspection work" of INFORMATION section.**

**NO**

**Procedure completed.**
**Perform "After-inspection work" of INFORMATION section.**

# DTC: P04DB

EN01H16F01030F03001082

## P04DB: Crankcase ventilation system - disconnection between the CV valve and the intake manifold

INFORMATION

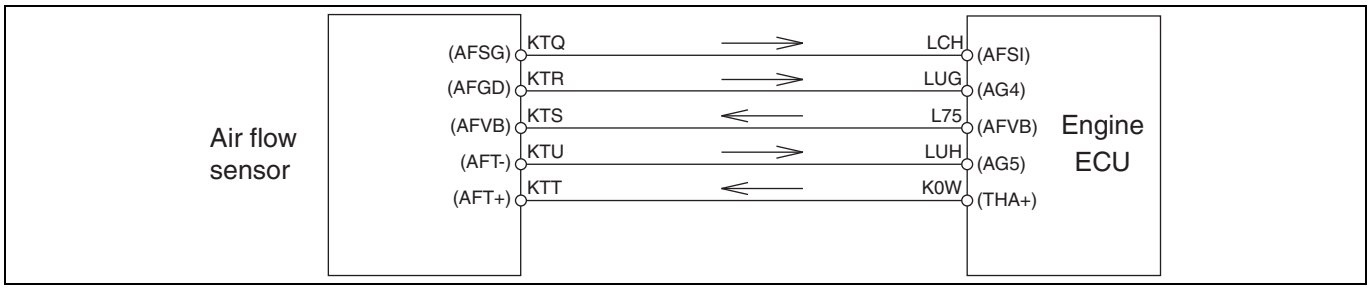


SAPH16F010300508

**1. Technical description**

- The closed breather circuit is malfunctioning and the air flow sensor detects trouble when air enters through the malfunctioning part.

**<Description of malfunction>**

- Closed breather malfunction is detected.

**2. DTC set condition**

(1) DTC detection condition

- Engine speed is between 720 r/min and 960 r/min.
- Engine speed fluctuation is 234 r/min/sec or less.
- Fuel injection quantity is between 0 $mm^3$/st. cyl and 80 $mm^3$/st. cyl.
- Fuel injection quantity variation is 78 $mm^3$/st. cyl. sec or less.
- Engine coolant temperature is 60 °C {140 °F} or less.
- EGR valve opening is 0 % or less (EGR-cut status)
- No other DTC is detected.

(2) Judgment criteria

- Theoretical air quantity calculated from boost pressure and atmospheric pressure and actual air quantity are compared for at least 10 seconds, and the ratio of theoretical air quantity to actual air quantity is at least 1.15. and:
- Difference between the DCY (Driving Cycle) value prior to the result above and the current DCY value is 0.10 or less; and
- The condition "(boost pressure - atmospheric pressure) was ≥18 kPa {2.6 psi}" when the starter switch turned off and engine was stopped after previous driving cycle is not continued for more than 3 seconds.

**3. Reset condition**

- After normal operation is restored and the starter switch is turned OFF.

**4. Indication, warning or system control regulation when the DTC is set.**

- MIL: ON
- SVS light: OFF
- Engine output is restricted.

**5. Symptoms on the vehicle when the DTC is set**

**<Symptoms on the vehicle due to backup control (fail safe function)>**

- EGR valve is fully closed.

**<Symptoms on the vehicle due to malfunction>**

- –

**6. Pre-inspection work**

- Check that the battery voltage is in the normal range.

**7. After-inspection work**

- Clear all past DTCs.
- Check that no DTC is detected after test drive.

**8. Estimated failure factors**

- Sensor is disconnected from measuring site or sensing unit is malfunctioning (due to dirt, clogging, damage, etc.).
- EGR valve failure.
- Diesel throttle valve failure.
- Intercooler failure (due to dirt, clogging, etc.).
- Engine ECU sensor power supply (air flow sensor dedicated 12 V power supply) failure or internal circuit failure.

## INSPECTION PROCEDURE: P04DB

| 1 | Inspect the air cleaner element |
|---|---|

1. Check the air cleaner element for dirt, clogging, or damage.
2. Make sure the element is a Hino genuine part.

**Was any failure found?**

**YES**

**Clean or replace the air cleaner element. Perform "After-inspection work" of INFORMATION section.**

**NO**

**Go to step 2.**

| 2 | Check the air intake system |
|---|---|

1. Check the intake hose and verify that there are no disconnections, clogging, punctures, or cracks.
2. Check the breather hose and verify that there are no disconnections, clogging, punctures, or cracks.
3. Check the intercooler hose and verify that there are no disconnections, clogging, punctures, or cracks.

**Was any failure found?**

**YES**

**Repair or replace the intake system hoses. Perform "After-inspection work" of INFORMATION section.**

**NO**

**Go to step 3.**

| 3 | Inspect the air flow sensor |
|---|---|

1. Check the installation of the air flow sensor.
2. Make sure there is no dirt or damage to the air flow sensor.

**Was any failure found?**

**YES**

**Replace the air flow sensor if the air flow sensor is dirty, clogged, or damaged.**
**Perform "After-inspection work" of INFORMATION section.**

**NO**

**Go to step 4.**

| 4 | Inspect for short-circuit of the air flow sensor harness |
|---|---|

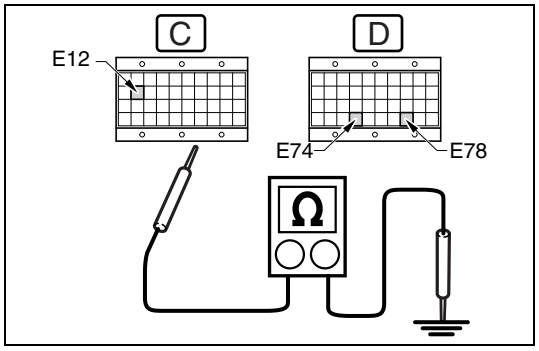

SAPH16F010300509

1. Set the starter switch to the "LOCK" position.
2. Disconnect the air flow sensor connector.
3. Connect the signal check harness to the engine ECU. (Do not connect harness to the ECU.)
4. Use the electrical tester to measure the resistance between the terminals of the engine ECU (signal check harness) and ground.

| Measurement conditions | Tester connections | Standard values |
|---|---|---|
| Starter switch: LOCK | Engine ECU (signal check harness) AFVB(E12) – Ground<br>AFSI(E74) – Ground<br>AG4(E78) – Ground | ∞ Ω |

**Do the measurements meet the standard value?**

**YES**

**Go to step 5.**

**NO**

**Repair or replace the harness.**
**Perform "After-inspection work" of INFORMATION section.**

| 5 | Inspect disconnection of the air flow sensor harness |
|---|---|

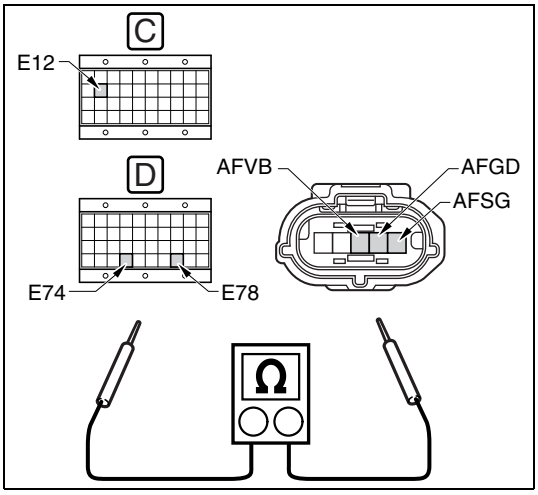

SAPH16F010300510

1. Use the electrical tester to measure the resistance between the terminals of the engine ECU (signal check harness) and air flow sensor vehicle-side connector.

| Measurement conditions | Tester connections | Standard values |
|---|---|---|
| Starter switch: LOCK | Engine ECU (signal check harness) – Air flow sensor vehicle-side connector<br>AFVB(E12) – AFVB<br>AFSI(E74) – AFSG<br>AG4(E78) – AFGD | Less than 1 Ω |

**Do the measurements meet the standard value?**

**YES**

**Go to step 6.**

**NO**

**Repair or replace the harness.**
**Perform "After-inspection work" of INFORMATION section.**

| 6 | Inspect the EGR valve |
|---|---|

1. Check the EGR valve for damage due to foreign substances.
2. Check if there is soot obstructing the exhaust gas passageway inlet or outlet.

**Was any failure found?**

**YES**

**Remove foreign substances and clean the valve.**
**Replace the EGR valve if it is damaged.**
**Perform "After-inspection work" of INFORMATION section.**

**NO**

**Go to step 7.**

| 7 | Check the response delay of the EGR valve [HINO DX II ] |
|---|---|

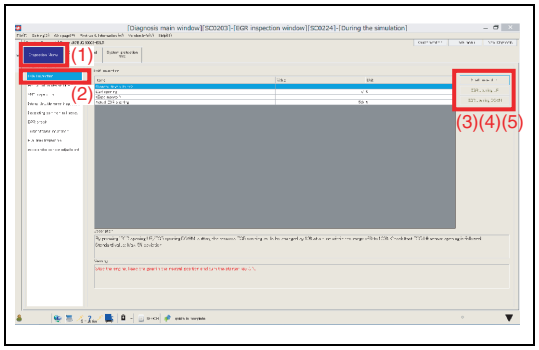


SAPH16F010300511

1. Set the starter switch to the "LOCK" position.

2. Connect the vehicle to HINO DX II .

3. Set the starter switch to "ON" position and select [Engine] on the screen of HINO DX II .

4. Select [Inspection Menu] and then [EGR inspection] from the menu, then inspect the response delay at the Target EGR position and Actual EGR position.

**⚠ CAUTION**
**Perform the inspection while the engine is stopped to avoid damages.**

<Inspection procedure>
(1) Select [Inspection Menu].
(2) Select [EGR inspection].
(3) Click [Start inspection].
(4) Click [EGR opening UP]:
• Inspect the response delay at each step of the Target EGR position and Actual EGR position from 0 to 100 %.
(5) Click [EGR opening DOWN]:
• Inspect the response delay at each step of the Target EGR position and Actual EGR position from 100 to 0 %.

**HINT**
**The EGR opening position changes of around 10 % per step between 0 – 100 %.**

| Standard values |
|---|
| **From the Target EGR position to the Actual EGR position, the response delay should be within 5 seconds.** |

5. Set the starter switch to the "ON" position.

6. Select [Inspection Menu] and then [EGR inspection] from the menu, then inspect the response delay at the Target EGR position and Actual EGR position.

**⚠ CAUTION**
**Perform the inspection while the engine is stopped to avoid damages.**

<Inspection procedure>
(1) Select [Inspection Menu].
(2) Select [EGR inspection].
(3) Click [Start inspection].
(4) Click [EGR opening UP]:
• Inspect the response delay at each step of the Target EGR position and Actual EGR position from 0 to 100 %.
(5) Click [EGR opening DOWN]:
• Inspect the response delay at each step of the Target EGR position and Actual EGR position from 100 to 0 %.

**HINT**
**The EGR opening position changes of around 10 % per step between 0 – 100 %.**

| Standard values |
| --- |
| From the Target EGR position to the Actual EGR position, the response delay should be within 5 seconds. |

**Do the measurements meet the standard value?**

**YES**

**Go to step 8.**

**NO**

**Replace the EGR valve.**
**Perform "After-inspection work" of INFORMATION section.**

## 8 Inspect the intake throttle valve

1. Stop the engine.
2. Check the operating status of the intake throttle valve (for incorrect opening or sticky valve).

**Was any failure found?**

**YES**

**Replace the intake throttle valve.**
**Perform "After-inspection work" of INFORMATION section.**

**NO**

**Go to step 9.**

## 9 Inspect the intercooler

1. Check if there is an obstruction due to clogging inside the intercooler.

**Was any failure found?**

**YES**

**Remove foreign substances and clean the intercooler.**
**Replace the intercooler if it is damaged.**
**Perform "After-inspection work" of INFORMATION section.**

**NO**

**Go to step 10.**

| 10 | Check the DTC detected (Engine ECU) [HINO DX ll ] |
|---|---|

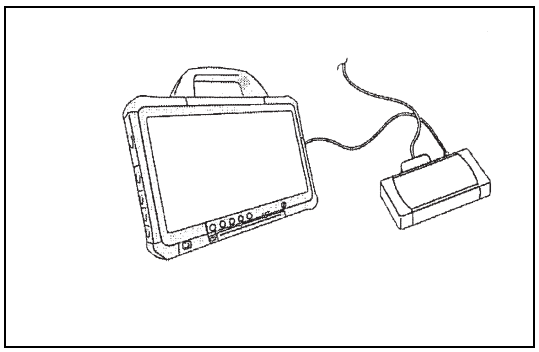

SAPH16F010300512

1. Perform engine warm-up. (engine coolant temperature: 60 °C {140 °F} or more)
2. Stop the engine.
3. Set the starter switch to the "ON" position.
4. Select [Engine] and check if P04DB has been detected.

**Has DTC P04DB been detected?**

**YES**

**Replace the engine ECU.**
**Perform "After-inspection work" of INFORMATION section.**

**NO**

**Procedure completed.**
**Perform "After-inspection work" of INFORMATION section.**

# DTC: P0500 and P0501

EN01H16F01030F03001083

## P0500: Vehicle speed sensor - low

INFORMATION

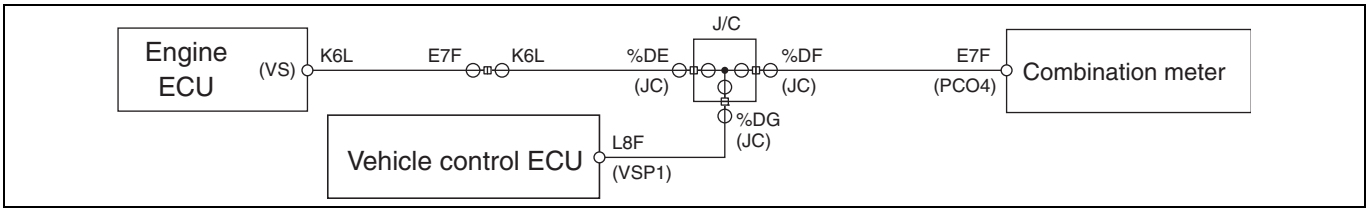


SAPH16F010300513

**1. Technical description**

- The engine ECU consistently measures pulses from the vehicle speed sensor through combination meter.

**<Description of malfunction>**

- Pulses from the vehicle speed sensor cannot be sensed.

**2. DTC set condition**

(1) DTC detection condition

- Starter switch ON.

**The conditions described below remain for 5 seconds or longer.**

- Engine speed is 1,200 r/min or more.
- Gear is engaged.
- The fuel injection quantity is 60 $mm^3$/st. cyl or more.
- Engine coolant temperature is 50 °C {122 °F} or higher.
- Battery voltage is in the range of 10 V to 16 V.
- The monitor disable DTC table can be referred to.

(2) Judgment criteria

- Output of the vehicle speed sensor remains at a vehicle speed of 0 km/h {0 mph} for 5 seconds or longer.

**3. Reset condition**

- After restoration to normal condition.

**4. Indication, warning or system control regulation when the DTC is set.**

- MIL: ON
- SVS light: OFF

**5. Symptoms on the vehicle when the DTC is set**

**<Symptoms on the vehicle due to backup control (fail safe function)>**

- –

**<Symptoms on the vehicle due to malfunction>**

- –

**6. Pre-inspection work**

- Check that the battery voltage is in the normal range.

**7. After-inspection work**

- Clear all past DTCs.
- Check that no DTC is stored after test drive.

**8. Estimated failure factors**

- Vehicle speed sensor failure
- Malfunction of pulse modulator (in combination meter)
- Harness disconnection or short-circuit
- Irregular contact (disconnection or poor fit of connector)

## P0501: Vehicle speed sensor - high

INFORMATION

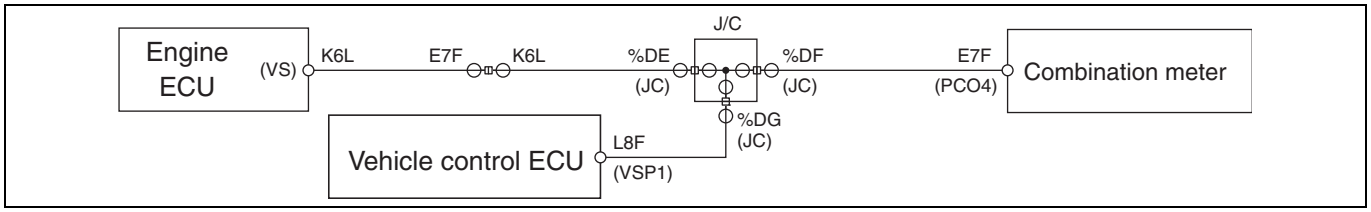


SAPH16F010300514

**1. Technical description**

- The Engine ECU consistently measures pulses from the vehicle speed sensor.

**<Description of malfunction>**

- Pulses from the vehicle speed sensor are improper.

**2. DTC set condition**

(1) DTC detection condition

- Starter switch ON.
- Engine speed is 0 r/min or more.
- The fuel injection quantity is 0 $mm^3$/st. cyl or less.
- Battery voltage is in the range of 10 V to 16 V.

(2) Judgment criteria

- Vehicle speed pulse frequency remains at 256 Hz or higher (112 miles/h) for 5 seconds or longer.

**3. Reset condition**

- After restoration to normal condition.

**4. Indication, warning or system control regulation when the DTC is set.**

- MIL: ON
- SVS light: OFF

**5. Symptoms on the vehicle when the DTC is set**

**<Symptoms on the vehicle due to backup control (fail safe function)>**

- –

**<Symptoms on the vehicle due to malfunction>**

- –

**6. Pre-inspection work**

- Check that the battery voltage is in the normal range.

**7. After-inspection work**

- Clear all past DTCs.
- Check that no DTC is stored after test drive.

**8. Estimated failure factors**

- Abnormal resistance of sensor
- Malfunction of pulse modulator
- Harness disconnection or short-circuit
- Irregular contact (disconnection or poor fit of connector)
- Noise

## INSPECTION PROCEDURE: P0500 and P0501

| 1 | Inspect the combination meter |
|---|---|

1. Drive the vehicle and confirm that the combination meter (speedometer) is working properly.

**Was any failure found?**

**YES**

**Check the combination meter (vehicle speed signal system).**
**Perform "After-inspection work" of INFORMATION section.**

**NO**

**Go to step 2.**

| 2 | Check the DTC detected (vehicle control ECU) |
|---|---|

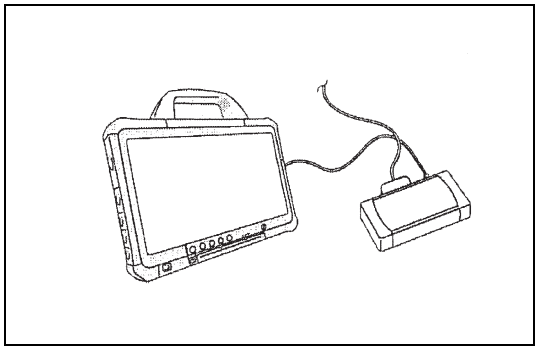

SAPH16F010300515

1. Set the starter switch to the "LOCK" position.
2. Connect the vehicle to HINO DX II .
3. Set the starter switch to the "ON" position.
4. Select [VCS] and check if the DTC (P0500 or P0501) has been detected.

**Has DTC (P0500 or P0501) been detected?**

**YES**

**Go to step 3.**

**NO**

**Go to step 5.**

| 3 | Inspect for short-circuits in wire harness of vehicle speed signal circuit |
|---|---|

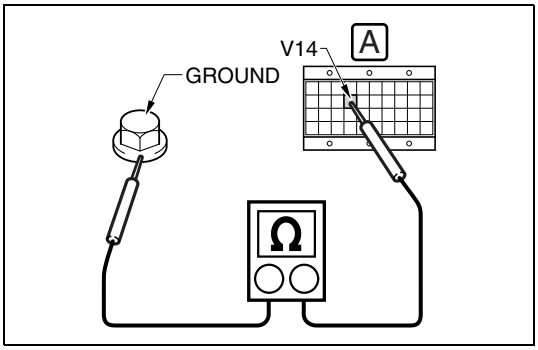


SAPH16F010300516

1. Set the starter switch to the "LOCK" position.
2. Disconnect the combination meter connector.
3. Connect the signal check harness to the engine ECU vehicle-side harness. (Do not connect the harness to the ECU.)
4. Use the electrical tester to measure the resistance between the engine ECU (signal check harness) and ground.

| Measurement conditions | Tester connections | Standard values |
|---|---|---|
| Starter switch: LOCK | Engine ECU (signal check harness) – Ground<br>V14(VS) – Ground | ∞ Ω |

**Do the measurements meet the standard value?**

**YES**

**Go to step 4.**

**NO**

**Repair or replace the harness.**
**Perform "After-inspection work" of INFORMATION section.**

| 4 | Inspect for disconnection in wire harness of vehicle speed signal circuit |
|---|---|

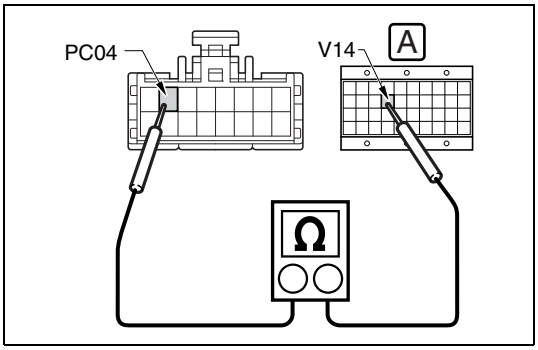


SAPH16F010300517

1. Use the electrical tester to measure the resistance between the combination meter vehicle-side connector terminal and engine ECU (signal check harness) terminal.

| Measurement conditions | Tester connections | Standard values |
|---|---|---|
| Starter switch: LOCK | Combination meter vehicle-side connector – engine ECU (signal check harness)<br>PC04 – V14(VS) | Less than 1 Ω |

**Do the measurements meet the standard value?**

**YES**

**Replace the combination meter.**
**Perform "After-inspection work" of INFORMATION section.**

**NO**

**Repair or replace the harness.**
**Perform "After-inspection work" of INFORMATION section.**

| 5 | Inspect for disconnection in wire harness of vehicle speed signal circuit |
|---|---|

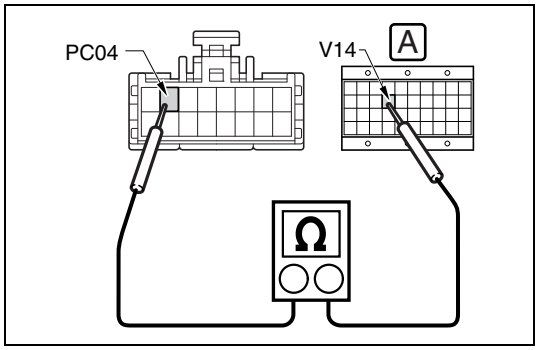


SAPH16F010300518

1. Set the starter switch to the "LOCK" position.
2. Disconnect the combination meter connector.
3. Connect the signal check harness to the engine ECU vehicle-side harness. (Do not connect the harness to the ECU.)
4. Use the electrical tester to measure the resistance between the combination meter vehicle-side connector terminal and engine ECU (signal check harness) terminal.

| Measurement conditions | Tester connections | Standard values |
|---|---|---|
| **Starter switch: LOCK** | **Combination meter vehicle-side connector – engine ECU (signal check harness) PC04 – V14(VS)** | **Less than 1 Ω** |

**Do the measurements meet the standard value?**

**YES**

**Replace the engine ECU.**
**Perform "After-inspection work" of INFORMATION section.**

**NO**

**Repair or replace the harness.**
**Perform "After-inspection work" of INFORMATION section.**

# DTC: P0504

EN01H16F01030F03001084

## P0504: Brake Switch Correlation

INFORMATION

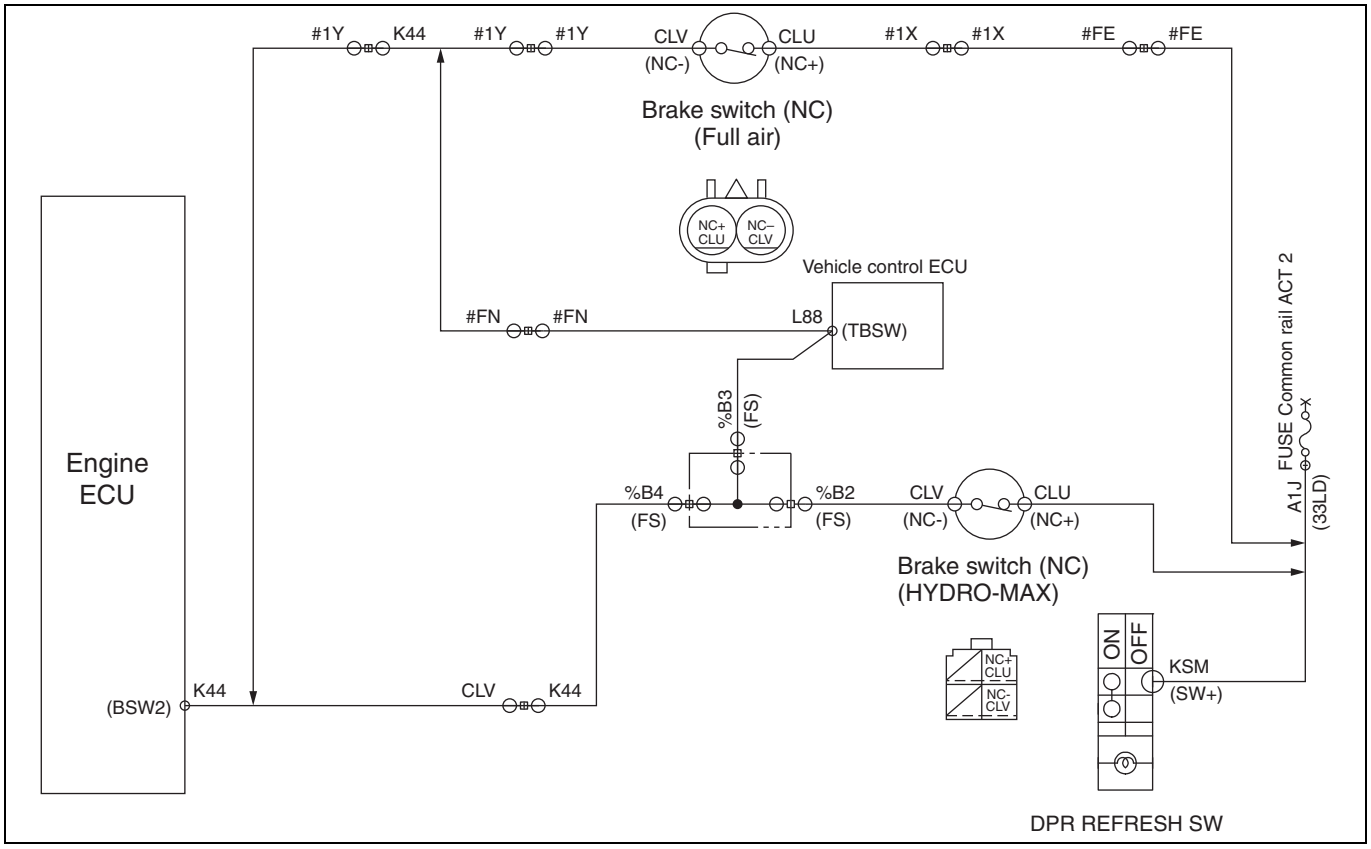


SAPH16F010300519

**1. Technical description**

- The brake switch detects brake input during deceleration.

**<Description of malfunction>**

- Malfunction of the brake switch caused by disconnection has been detected.

**2. DTC set condition**

(1) Check conditions

- Starter switch ON.
- Battery voltage is in the range of 10 V to 16 V.
- Absence of input of the brake switch is detected during deceleration.

(2) Judgment criteria

- Absence of input of the brake switch remains for 3 seconds or longer during deceleration.

**3. Reset condition**

- Immediately after normal operation is restored.

**4. Indication, warning or system control regulation when the DTC is set.**

- MIL: OFF
- SVS light: OFF
- Cruise control function is not available.

**5. Symptoms on the vehicle when the DTC is set**

**<Symptoms on the vehicle due to backup control (fail safe function)>**

- Cruise control does not work.

**<Symptoms on the vehicle due to malfunction>**

- –

**6. Pre-inspection work**

- Check that the battery voltage is in the normal range.

**7. After-inspection work**

- Clear all past DTCs.
- Check that no DTC is stored after test drive.

**8. Estimated failure factors**

- Brake switch failure (stuck switch)
- Irregular contact (disconnection or poor fit of connector)
- Harness disconnection or short-circuit
- CAN signal: Noise

## INSPECTION PROCEDURE: P0504

| 1 | Inspect the brake switch connector |
|---|---|

1. Check the connection of the brake switch connector (Looseness and poor contact).

**Was any failure found?**

**YES**

**Connect securely, repair if needed.**
**Perform "After-inspection work" of INFORMATION section.**

**NO**

**Go to step 2.**

| 2 | Inspect the brake switch |
|---|---|

1. Check the installation of the brake switch.
2. Check if the brake switch is properly adjusted.

**Was any failure found?**

**YES**

**Adjust the brake switch so that it is correctly installed.**
**Perform "After-inspection work" of INFORMATION section.**

**NO**

**Go to step 3.**

## 3 Inspect the brake switch unit

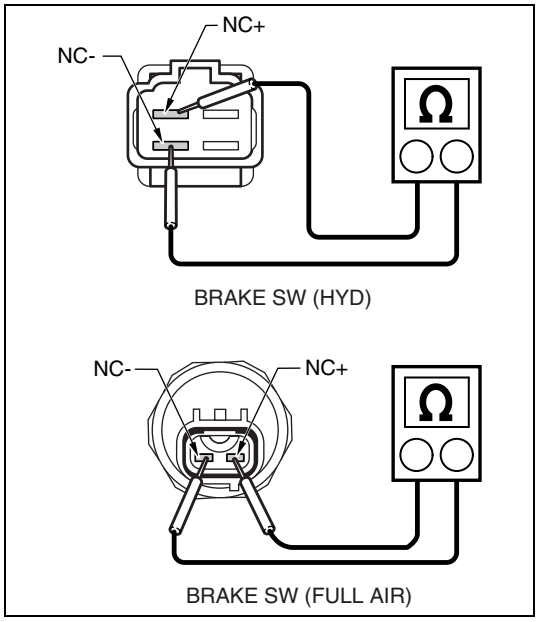


SAPH16F010300520

1. Set the starter switch to the "LOCK" position.
2. Disconnect the brake switch connector.
3. Use the electrical tester to measure the resistance between the terminals of the brake switch.

| Measurement conditions | Tester connections | Standard values |
|---|---|---|
| **Starter switch: LOCK** | **Brake switch NC+ – NC-** | • **Depress brake pedal: ∞ Ω**<br>• **Release brake pedal: 2 Ω max.** |

**Do the measurements meet the standard value?**

**YES**

**Go to step 4.**

**NO**

**Replace the brake switch.**
**Perform "After-inspection work" of INFORMATION section.**

## 4 Check the brake switch power supply

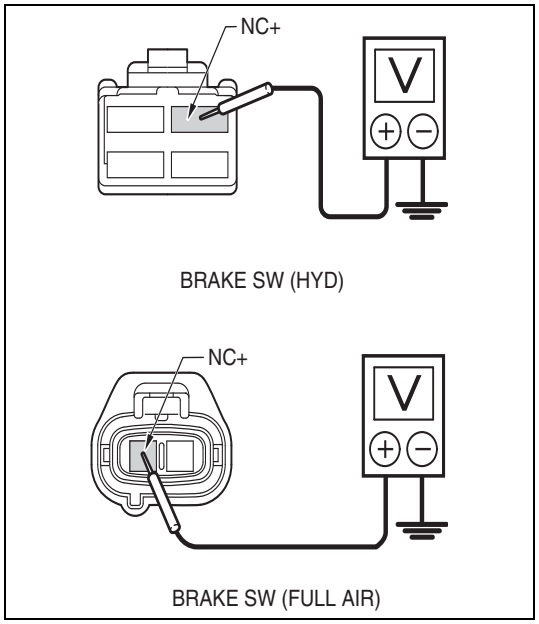


SAPH16F010300521

1. Set the starter switch to the "ON" position.
2. Use the electrical tester to measure the voltage between the NC+ terminal in the brake switch vehicle-side connector and ground.

| Measurement conditions | Tester connections | Standard values |
|---|---|---|
| **Starter switch: ON** | **Brake switch vehicle-side connector NC+ – Ground** | **More than 10 V** |

**Do the measurements meet the standard value?**

| YES | NO |
|---|---|
| **Go to step 5.** | **Repair or replace the brake switch power supply circuit (fuse, wire harness). Perform "After-inspection work" of INFORMATION section.** |

## 5 Check the brake switch signal

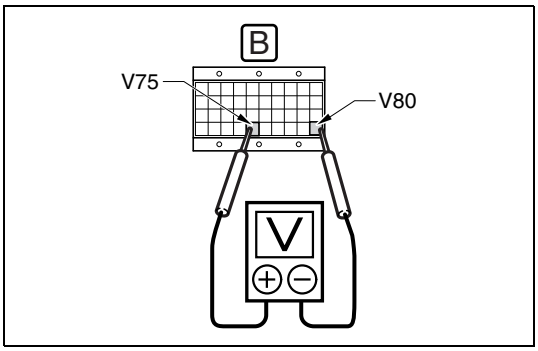

SAPH16F010300522

1. Set the starter switch to the "LOCK" position.
2. Connect the brake switch connector.
3. Connect the signal check harness to the engine ECU.
4. Set the starter switch to the "ON" position.
5. Use the electrical tester to measure the voltage between the terminals of the engine ECU (signal check harness).

| Measurement conditions | Tester connections | Standard values |
|---|---|---|
| **Starter switch: ON** | **Engine ECU (signal check harness) BSW2(V75) – PGD4(V80)** | • **Depress brake pedal: 0 V**<br>• **Release brake pedal: 10 V max.** |

**Do the measurements meet the standard value?**

| YES | NO |
|---|---|
| **Go to step 6.** | **Repair or replace the wire harness between the brake switch and the engine ECU. Perform "After-inspection work" of INFORMATION section.** |

| 6 | Check the DTC detected (Engine ECU) [HINO DX ll ] |
|---|---|

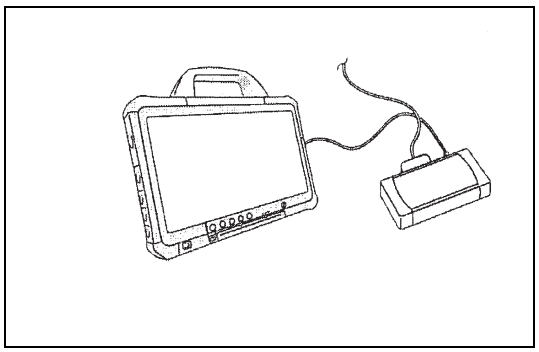

SAPH16F010300523

1. Set the starter switch to the "LOCK" position.
2. Connect the vehicle to HINO DX II .
3. Set the starter switch to the "ON" position.
4. Select [Engine] and check if P0504 have been detected.

**Has DTC P0504 been detected?**

**YES**

**Replace the engine ECU.**
**Perform "After-inspection work" of INFORMATION section.**

**NO**

**Procedure completed.**
**Perform "After-inspection work" of INFORMATION section.**

# DTC: P0506 and P0507

EN01H16F01030F03001085

## P0506: Idle speed control system (Low)
## P0507: Idle speed control system (High)

INFORMATION

**1. Technical description**

- A difference between a target speed and an actual speed is detected during idling in the engine ECU.

**<Description of malfunction>**

- A difference between a target speed and an actual speed has been detected during idling.

**2. DTC set condition**

(1) Check conditions

- Starter switch ON.

**The conditions described below remain for 10 seconds or longer.**

- Accelerator pedal opening = 0 % (do not depress the accelerator pedal)
- Engine coolant temperature is 60 °C {140 °F} or higher.
- The target idling speed is within the range of 745 to 755 r/min.
- Vehicle speed is 0 mile/h.

(2) Judgment criteria

- P506: An actual engine speed remains at 725 r/min or lower for 15 seconds or longer.
- P507: An actual engine speed remains at 725 r/min or higher for 15 seconds or longer.

**3. Reset condition**

- Immediately after normal operation is restored.

**4. Indication, warning or system control regulation when the DTC is set.**

- MIL: ON
- SVS light: OFF

**5. Symptoms on the vehicle when the DTC is set**

**<Symptoms on the vehicle due to backup control (fail safe function)>**

- –

**<Symptoms on the vehicle due to malfunction>**

- Extremely large load applied to engine while it is idling
- Excessive fuel injection quantity

**6. Pre-inspection work**

- Check that the battery voltage is in the normal range.

**7. After-inspection work**

- Clear all past DTCs.
- Check that no DTC is stored after test drive.

**8. Estimated failure factors**

- Injector injection quantity abnormal
- Dragging/interference with transmission
- Failure in air compressor
- Failure in power steering pump

## INSPECTION PROCEDURE: P0506 and P0507

| 1 | Check the DTC detected [HINO DX II ] |
|---|---|

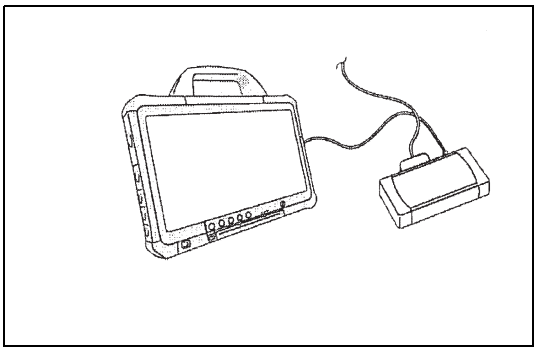

SAPH16F010300524

1. Set the starter switch to the "LOCK" position.
2. Connect the vehicle to HINO DX II .
3. Set the starter switch to the "ON" position.
4. Select [Engine] and check if any DTC other than (P0506 or P0507) has been detected.

**Has a DTC other than (P0506 or P0507) been detected?**

**YES**

**Go to the diagnostic procedure of a related DTC.**

**NO**

**Go to step 2.**

| 2 | Check the injector fuel injection quantity [HINO DX II ] |
|---|---|

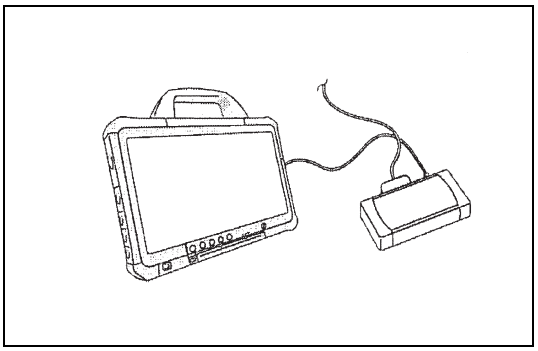

SAPH16F010300525

1. Start the engine.
2. Select [Injection quantity] from [Data monitor Setting] in HINO DX II menu and measure the fuel injection quantity.
3. Select [Engine speed] from [Data monitor Setting] on HINO DX II menu, and measure the engine speed.

| Measurement conditions | Standard values |
|---|---|
| **Engine speed:**<br>**1,500 r/min (no load)**<br>**Engine coolant temperature:**<br>**80 °C {176 °F} minimum** | **TRANS model:**<br>**12 $mm^3$/st maximum**<br>**MT model:**<br>**10 $mm^3$/st maximum** |

**Do the measurements meet the standard value?**

**YES**

**Go to step 3.**

**NO**

**Replace the injector.**
**Perform "After-inspection work" of INFORMATION section.**

| 3 | Inspect the air compressor |
|---|---|

1. Check the air compressor for failure.

**Was any failure found?**

| YES | NO |
|---|---|
| **Repair or replace the faulty part. Perform "After-inspection work" of INFORMATION section.** | **Go to step 4.** |

| 4 | Inspect the power steering pump |
|---|---|

1. Check the power steering pump for failure.

**Was any failure found?**

| YES | NO |
|---|---|
| **Repair or replace the faulty part. Perform "After-inspection work" of INFORMATION section.** | **Go to step 5.** |

| 5 | Check the DTC detected [HINO DX II ] |
|---|---|

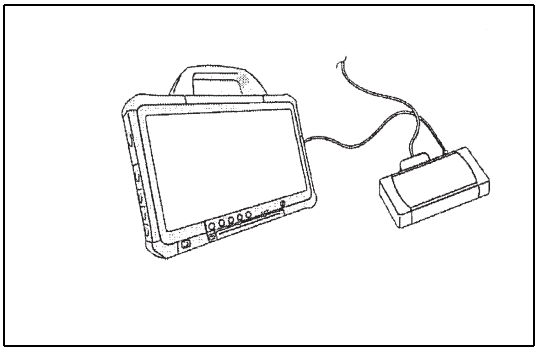

SAPH16F010300526

1. Perform engine warm-up. (engine coolant temperature: 60 °C {140 °F} or more)
2. Stop the engine and set the starter switch to the "ON" position.
3. Select [Engine] and check if (P0506 or P0507) has been detected.

**Has DTC (P0506 or P0507) been detected?**

| YES | NO |
|---|---|
| **Replace the engine ECU. Perform "After-inspection work" of INFORMATION section.** | **Procedure completed. Perform "After-inspection work" of INFORMATION section.** |

# DTC: P0524

EN01H16F01030F03001086

## P0524: Engine oil pressure Too Low

INFORMATION

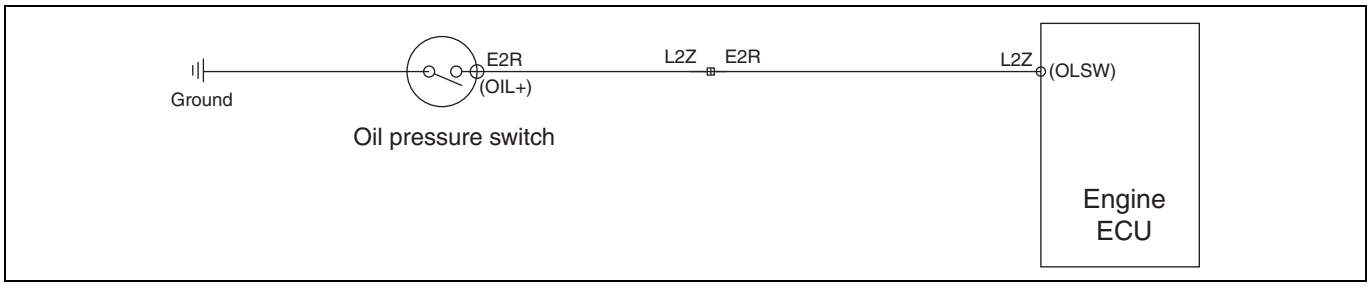


SAPH16F010300527

**1. Technical description**

- A drop in engine oil pressure is sensed by the oil pressure switch.

**<Description of malfunction>**

- Drop in engine oil pressure is detected.

**2. DTC set condition**

(1) Check conditions

- While the engine is in operation - Always

(2) Judgment criteria

- The oil pressure switch continues to be ON for more than 30 seconds.

**3. Reset condition**

- Immediately after normal operation is restored.

**4. Indication, warning or system control regulation when the DTC is set.**

- MIL: OFF
- SVS light: ON
- Engine output is restricted.
- Cruise control is not available.
- Engine shuts down in models for PTL or models with customized shutdown function.

**5. Symptoms on the vehicle when the DTC is set**

**<Symptoms on the vehicle due to backup control (fail safe function)>**

- Engine output is insufficient.
- Cruise control does not work.
- Engine is shut down in models with customized shutdown function

**<Symptoms on the vehicle due to malfunction>**

- Drop in engine oil pressure

**6. Pre-inspection work**

- Check that the battery voltage is in the normal range.

**7. After-inspection work**

- Clear all past DTCs.
- Check that no DTC is stored after test drive.

**8. Estimated failure factors**

- Drop in oil pan oil quantity: Drop in pressure due to air suction
- Malfunction of oil pressure circuit: Drop in pressure due to oil leakage
- Malfunction of oil pressure switch: Correct oil pressure cannot be sensed.
- GND short-circuit of harness: The sensing result of the oil pressure switch becomes invalid.

## INSPECTION PROCEDURE: P0524

| 1 | Check the engine oil level |
|---|---|

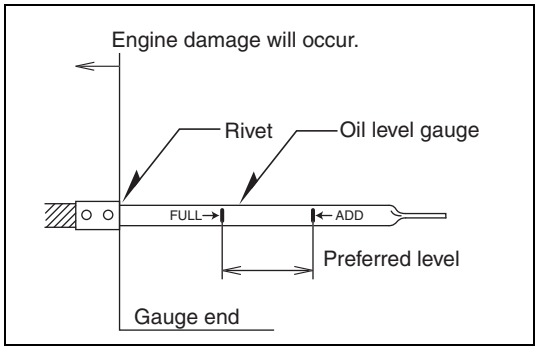


SAPH16F010300528

1. Check the oil level gauge and make sure the engine oil quantity is within the stipulated value.
2. Check the engine oil condition (dirt, viscosity).

**Was any failure found?**

**YES**

**Adjust the engine oil quantity so that it is within the stipulated value.**
**Change the oil if it is dirty.**
**Perform "After-inspection work" of INFORMATION section.**

**NO**

**Go to step 2.**

| 2 | Check for engine oil leaks |
|---|---|

1. Make sure there is no oil leaking from the engine unit or from around the oil pressure switch.

**Was any failure found?**

**YES**

**Repair the faulty part.**
**Perform "After-inspection work" of INFORMATION section.**

**NO**

**Go to step 3.**

| 3 | Inspect the oil pressure switch connector |
|---|---|

1. Check the connection of the oil pressure switch connector (Looseness and poor contact).

**Was any failure found?**

**YES**

**Connect securely, repair if needed.**
**Perform "After-inspection work" of INFORMATION section.**

**NO**

**Go to step 4.**

## 4 Inspect the oil pressure switch unit

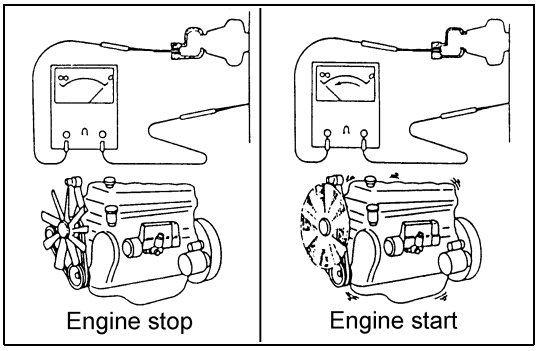


SAPH16F010300529

1. Set the starter switch to the "LOCK" position.
2. Disconnect the oil pressure switch connector.
3. Use the electrical tester to measure the resistance between the terminals of the oil pressure switch and ground.

| Measurement conditions | Standard values |
|---|---|
| • Stop the engine (OFF)<br>• Start the engine (ON) | With engine stopped: Less than 1 Ω<br>With engine running: ∞ Ω |

**Do the measurements meet the standard value?**

**YES**

**Go to step 5.**

**NO**

**Replace the oil pressure switch.**
**Perform "After-inspection work" of INFORMATION section.**

## 5 Inspect for short-circuit of the oil pressure switch harness

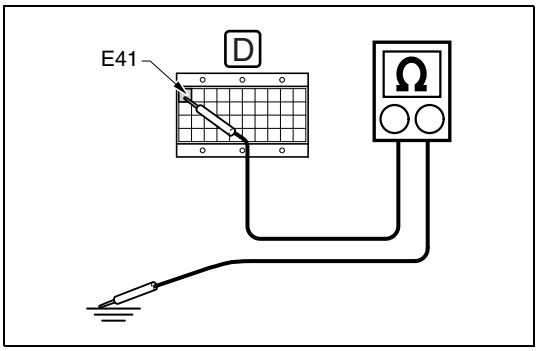


SAPH16F010300530

1. Set the starter switch to the "LOCK" position.
2. Connect the signal check harness to the engine ECU vehicle-side harness. (Do not connect the harness to the ECU.)
3. Disconnect the oil pressure switch connector.
4. Use the electrical tester to measure the resistance between the OLSW (E41) terminal in the engine ECU (signal check harness) and ground.

| Measurement conditions | Tester connections | Standard values |
|---|---|---|
| Starter switch: LOCK | Engine ECU (signal check harness) OLSW(E41) – Ground | ∞ Ω |

**Do the measurements meet the standard value?**

**YES**

**Go to step 6.**

**NO**

**Repair or replace the harness.**
**Perform "After-inspection work" of INFORMATION section.**

## 6 Inspect disconnection of the oil pressure switch harness

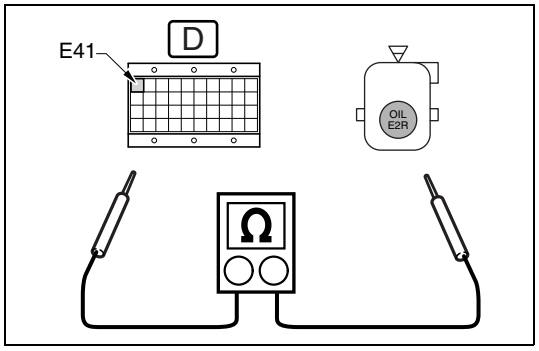


SAPH16F010300531

1. Use the electrical tester to measure the resistance between the terminals of the engine ECU (signal check harness) and oil pressure switch vehicle-side connector.

| Measurement conditions | Tester connections | Standard values |
|---|---|---|
| Starter switch: LOCK | Engine ECU (signal check harness) – Oil pressure switch vehicle-side connector OLSW(E41) – OIL(E2R) | Less than 1 Ω |

**Do the measurements meet the standard value?**

**YES**

**Replace the engine ECU.**
**Perform "After-inspection work" of INFORMATION section.**

**NO**

**Repair or replace the harness.**
**Perform "After-inspection work" of INFORMATION section.**

# DTC: P0545 and P0546

EN01H16F01030F03001087

## P0545: Exhaust gas temperature sensor 1 (ATC upstream) - out of range (Out of range low)

INFORMATION

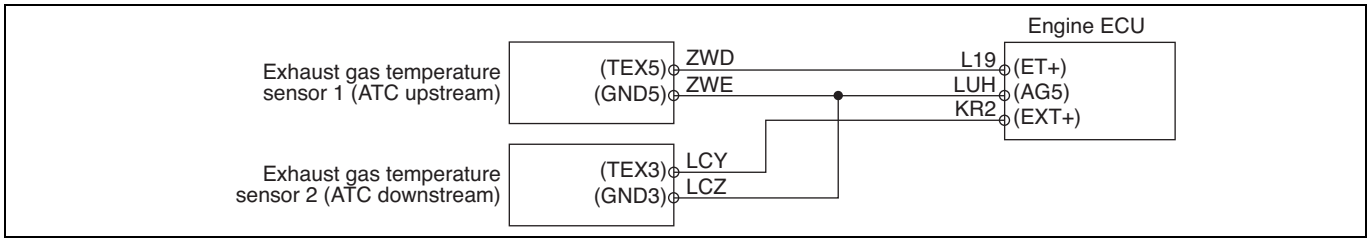


SAPH16F010300532

**1. Technical description**

- The exhaust gas temperature sensor 1 (ATC upstream) and the exhaust gas temperature sensor 2 (ATC downstream) consistently detects exhaust gas temperature.
- A reading taken by the exhaust gas temperature sensor 1 (ATC upstream) and the exhaust gas temperature sensor 2 (ATC downstream) are used to control DPR regeneration.

**<Description of malfunction>**

- Exhaust gas temperature cannot be correctly recognized.

**2. DTC set condition**

(1) DTC detection condition

- Battery voltage is in the range of 10 V to 16 V.

(2) Judgment criteria

- Voltage of the exhaust gas temperature sensor 1 (ATC upstream) and the exhaust gas temperature sensor 2 (ATC downstream) remain less than 0.063 V (1,165 °C {2,219 °F}) for 3 seconds.

**3. Reset condition**

- After restoration to normal condition

**4. Indication, warning or system control regulation when the DTC is set.**

- MIL: ON
- SVS light: OFF

**5. Symptoms on the vehicle when the DTC is set**

**<Symptoms on the vehicle due to backup control (fail safe function)>**

- –

**<Symptoms on the vehicle due to malfunction>**

- –

**6. Pre-inspection work**

- Check that the battery voltage is in the normal range.

**7. After-inspection work**

- Clear all past DTCs.
- Check that no DTC is stored after test drive.

**8. Estimated failure factors**

**Exhaust gas temperature sensor 1 (ATC upstream) and exhaust gas temperature sensor 2 (ATC downstream):**

- Loose/disconnected sensor or failure in sensing area (contamination, clogging or breakage)
- Abnormal resistance of sensor
- Failure in engine ECU sensor power supply
- Disconnection or short-circuit in sensor harness
- Irregular contact (disconnection or poor fit of connector)

## P0546: Exhaust gas temperature sensor 1 (ATC upstream) - out of range (Out of range high)

INFORMATION

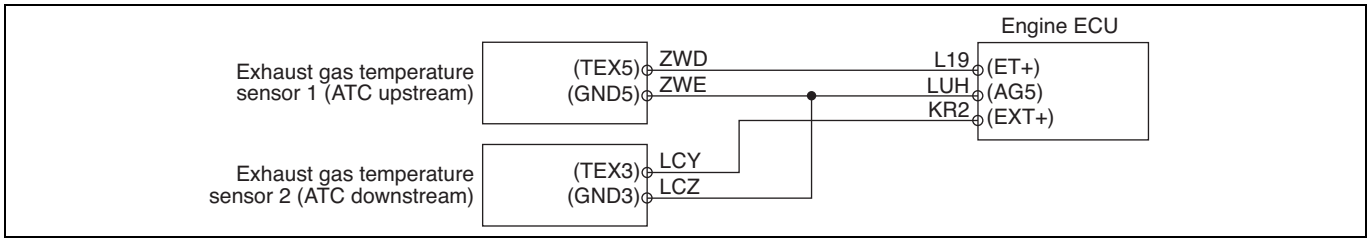


SAPH16F010300533

**1. Technical description**

- The exhaust gas temperature sensor 1 (ATC upstream) consistently detects exhaust gas temperature.
- A reading taken by the exhaust gas temperature sensor 1 (ATC upstream) is used to control DPR regeneration.

**<Description of malfunction>**

- Exhaust gas temperature cannot be correctly recognized.

**2. DTC set condition**

(1) DTC detection condition

- Intake air temperature is -20 °C {-4 °F} or higher.
- Battery voltage is in the range of 10 V to 16 V.
- The engine speed remains at 690 r/min or more for 5 seconds or more.

(2) Judgment criteria

- Voltage of the exhaust gas temperature sensor 1 (ATC upstream) and the exhaust gas temperature sensor 2 (ATC downstream) remains at 4.958 V or higher (-46 °C {-50.8 °F} or lower) for 3 seconds.

**3. Reset condition**

- After restoration to normal condition

**4. Indication, warning or system control regulation when the DTC is set.**

- MIL: ON
- SVS light: OFF

**5. Symptoms on the vehicle when the DTC is set**

**<Symptoms on the vehicle due to backup control (fail safe function)>**

- –

**<Symptoms on the vehicle due to malfunction>**

- –

**6. Pre-inspection work**

- Check that the battery voltage is in the normal range.

**7. After-inspection work**

- Clear all past DTCs.
- Check that no DTC is stored after test drive.

**8. Estimated failure factors**

**Exhaust gas temperature sensor 1 (ATC upstream) and exhaust gas temperature sensor 2 (ATC downstream):**

- Loose/disconnected sensor or failure in sensing area (contamination, clogging or breakage)
- Abnormal resistance of sensor
- Failure in engine ECU sensor power supply
- Disconnection or short-circuit in sensor harness
- Irregular contact (disconnection or poor fit of connector)

## INSPECTION PROCEDURE: P0545 and P0546

| 1 | **Inspect the exhaust gas temperature sensor 1 (ATC upstream) and the exhaust gas temperature sensor 2 (ATC downstream) connector** |
|---|---|

1. Check the connection of the exhaust gas temperature sensor 1 (ATC upstream) and the exhaust gas temperature sensor 2 (ATC downstream) connector (looseness or poor contact).

**Was any failure found?**

**YES**

**Connect securely, repair if needed.**
**Perform "After-inspection work" of INFORMATION section.**

**NO**

**Go to step 2.**

| 2 | **Inspect the exhaust gas temperature sensor 1 (ATC upstream) and the exhaust gas temperature sensor 2 (ATC downstream)** |
|---|---|

1. Check the installation of the exhaust gas temperature sensor 1 (ATC upstream) and the exhaust gas temperature sensor 2 (ATC downstream).
2. Make sure there is no dirt, damage or clogging in the sensing unit of the exhaust gas temperature sensor 1 (ATC upstream) and the exhaust gas temperature sensor 2 (ATC downstream).

**Was any failure found?**

**YES**

**Clean the sensing unit and connect the sensor securely.**
**If damaged, replace the exhaust gas temperature sensor 1 (ATC upstream) and the exhaust gas temperature sensor 2 (ATC downstream).**
**Perform "After-inspection work" of INFORMATION section.**

**NO**

**Go to step 3.**

| 3 | Inspect the exhaust gas temperature sensor 1 (ATC upstream) and the exhaust gas temperature sensor 2 (ATC downstream) unit |
|---|---|

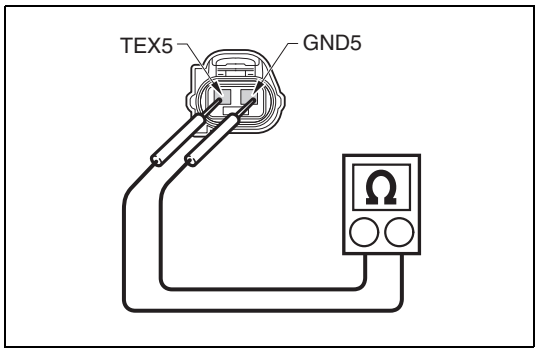


SAPH16F010300534

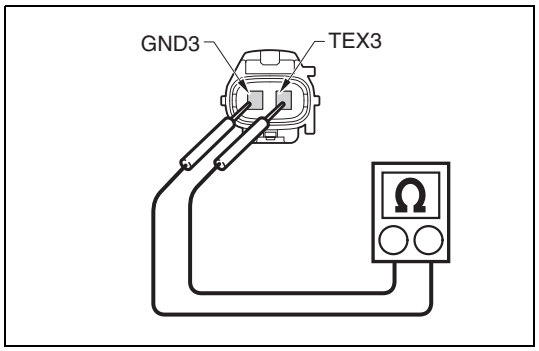


SAPH16F010300535

1. Set the starter switch to the "LOCK" position.
2. Disconnect the exhaust gas temperature sensor 1 (ATC upstream) and the exhaust gas temperature sensor 2 (ATC downstream) connector.
3. Use the electrical tester to measure the resistance between the terminals of the exhaust gas temperature sensor 1 (ATC upstream) and the exhaust gas temperature sensor 2 (ATC downstream).

| Measurement conditions | Tester connections | Standard values |
|---|---|---|
| **Starter switch: LOCK** | **Exhaust gas temperature sensor 1 (ATC upstream) TEX5 – GND5**<br>**Exhaust gas temperature sensor 2 (ATC downstream) TEX3 – GND3** | **20 °C {68 °F}: 13.7 – 29.8 kΩ**<br>**50 °C {122 °F}: 7.13 – 13.7 kΩ**<br>**80 °C {176 °F}: 4.1 – 7.13 kΩ** |

**Do the measurements meet the standard value?**

**YES**

**Go to step 4.**

**NO**

**Replace faulty part.**
**Perform "After-inspection work" of INFORMATION section.**

| 4 | Inspect the sensor power supply |
|---|---|

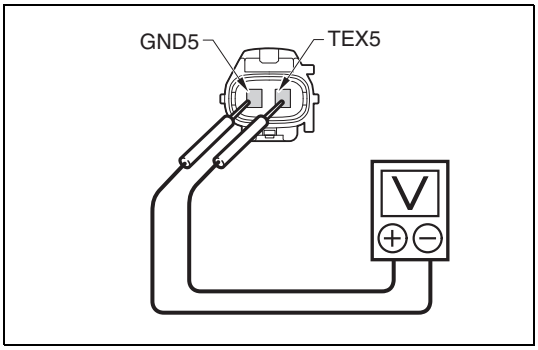


SAPH16F010300536

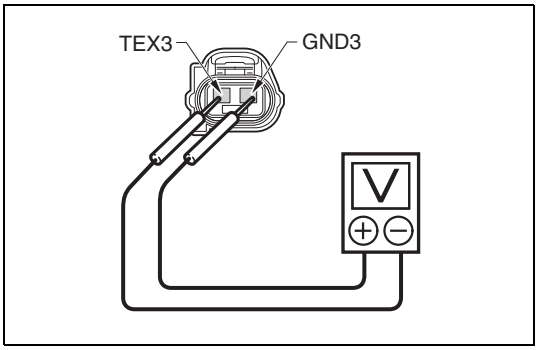


SAPH16F010300537

1. Set the starter switch to the "ON" position.
2. Use the electrical tester to measure the voltage between the terminals of the exhaust gas temperature sensor 1 (ATC upstream) and the exhaust gas temperature sensor 2 (ATC downstream) vehicle-side connector.

| Measurement conditions | Tester connections | Standard values |
|---|---|---|
| **Starter switch: ON** | **Exhaust gas temperature sensor 1 (ATC upstream) vehicle-side connector TEX5 – GND5**<br>**Exhaust gas temperature sensor 2 (ATC downstream) vehicle-side connector TEX3 – GND3** | **4.5 – 5.5 V** |

**Do the measurements meet the standard value?**

**YES**

**Go to step 7.**

**NO**

**Go to step 5.**

| 5 | Check short-circuit in wire harness of exhaust gas temperature sensor 1 (ATC upstream) and the exhaust gas temperature sensor 2 (ATC downstream) |
|---|---|

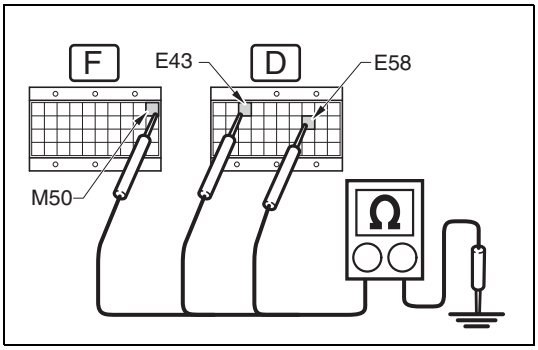


SAPH16F010300538

1. Set the starter switch to the "LOCK" position.
2. Connect the signal check harness to the engine ECU vehicle-side harness. (Do not connect the harness to the ECU.)
3. Use the electrical tester to measure the resistance between the engine ECU (signal check harness) terminals and ground.

| Measurement conditions | Tester connections | Standard values |
|---|---|---|
| **Starter switch: LOCK** | **Engine ECU (signal check harness) EXT+ (E43) – Ground**<br>**AG5 (E58) – Ground**<br>**KR2 (M50) – Ground** | **∞ Ω** |

**Do the measurements meet the standard value?**

**YES**

**Go to step 6.**

**NO**

**Repair or replace the harness.**
**Perform "After-inspection work" of INFORMATION section.**

## 6 Check disconnection in wire harness of exhaust gas temperature sensor 1 (ATC upstream) and the exhaust gas temperature sensor 2 (ATC downstream)

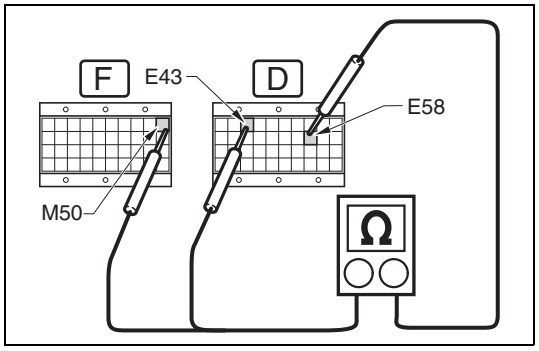

SAPH16F010300539

1. Connect the exhaust gas temperature sensor 1 (ATC upstream) and the exhaust gas temperature sensor 2 (ATC downstream) connector.
2. Use the electrical tester to measure the resistance between the terminals of the engine ECU (signal check harness).

| Measurement conditions | Tester connections | Standard values |
|---|---|---|
| **Starter switch: LOCK** | **Engine ECU (signal check harness) EXT+ (E43) – AG5 (E58) KR2 (M50) – AG5 (E58)** | **20 °C {68 °F}: 13.7 – 29.8 kΩ 50 °C {122 °F}: 7.13 – 13.7 kΩ 80 °C {176 °F}: 4.1 – 7.13 kΩ** |

**Do the measurements meet the standard value?**

**YES**

**Go to step 7.**

**NO**

**Repair or replace the harness.**
**Perform "After-inspection work" of INFORMATION section.**

## 7 Check the DTC detected (Engine ECU)

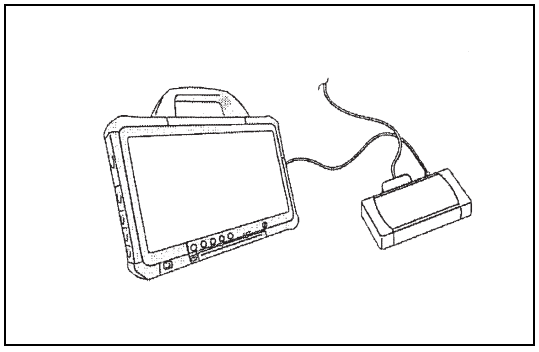
SAPH16F010300540

1. Perform engine warm up. (engine coolant temperature: 80 °C {176 °F} or more)
2. Stop the engine and set the starter switch to the "LOCK" position.
3. Connect the vehicle to HINO DX II .
4. Set the starter switch to the "ON" position.
5. Select [Engine] and check if the DTC (P0545 or P0546) has been detected.

**Has DTC (P0545 or P0546) been detected?**

**YES**

**Replace the engine ECU.**
**Perform "After-inspection work" of INFORMATION section.**

**NO**

**Procedure completed.**
**Perform "After-inspection work" of INFORMATION section.**

# DTC: P054E and P054F

EN01H16F01030F03001088

## P054E: Idle fuel control system (low)
## P054F: Idle fuel control system (high)

INFORMATION

**1. Technical description**

- P054E: Fuel injection quantity is detected unusually low during idling in the engine ECU.
- P054F: Fuel injection quantity is detected unusually high during idling in the engine ECU.

**<Description of malfunction>**

- A difference between a target speed and an actual speed has been detected during idling.

**2. DTC set condition**

(1) Check conditions

- Starter switch ON.

**The conditions described below remain for 10 seconds or longer.**

- Accelerator pedal opening = 0 % (do not depress the accelerator pedal)
- Engine coolant temperature is 71 °C {160 °F} or higher.
- The target idling speed is within the range of 745 to 755 r/min.
- Vehicle speed is 0 mile/h.

(2) Judgment criteria

- P54E: Fuel injection quantity remains at 2 $mm^3$/st or lower for 15 seconds or longer.
- P54F: Fuel injection quantity remains at 43.5(MT), 52.5(TRANS) $mm^3$/st or higher for 15 seconds or longer.

**3. Reset condition**

- Immediately after normal operation is restored.

**4. Indication, warning or system control regulation when the DTC is set.**

- MIL: ON
- SVS light: OFF

**5. Symptoms on the vehicle when the DTC is set**

**<Symptoms on the vehicle due to backup control (fail safe function)>**

- –

**<Symptoms on the vehicle due to malfunction>**

- Extremely large load applied to engine while it is idling
- Excessive fuel injection quantity

**6. Pre-inspection work**

- Check that the battery voltage is in the normal range.

**7. After-inspection work**

- Clear all past DTCs.
- Check that no DTC is stored after test drive.

**8. Estimated failure factors**

- Injector injection quantity abnormal
- Dragging/interference with transmission
- Failure in air compressor
- Failure in power steering pump

## INSPECTION PROCEDURE: P054E and P054F

| 1 | Check the DTC detected [HINO DX II ] |
|---|---|

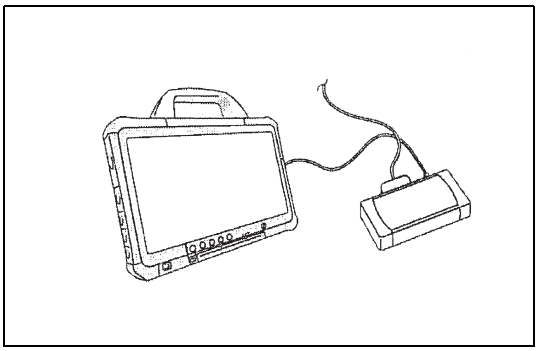

SAPH16F010300541

1. Set the starter switch to the "LOCK" position.
2. Connect the vehicle to HINO DX II .
3. Set the starter switch to the "ON" position.
4. Select [Engine] and check if any DTC other than (P054E or P054F) has been detected.

**Has a DTC other than (P054E or P054F) been detected?**

**YES**

**Go to the diagnostic procedure of a related DTC.**

**NO**

**Go to step 2.**

| 2 | Check the injector fuel injection quantity [HINO DX II ] |
|---|---|

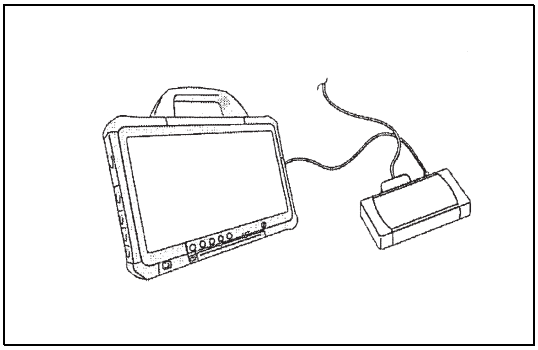

SAPH16F010300542

1. Start the engine.
2. Select [Injection quantity] from [Data monitor Setting] in HINO DX II menu and measure the fuel injection quantity.
3. Select [Engine speed] from [Data monitor Setting] on HINO DX II menu, and measure the engine speed.

| Measurement conditions | Standard values |
|---|---|
| **Engine speed:<br>1,500 r/min (no load)<br>Engine coolant temperature:<br>80 °C {176 °F} minimum** | **TRANS model:<br>12 $mm^3$/st maximum<br>MT model:<br>10 $mm^3$/st maximum** |

**Do the measurements meet the standard value?**

**YES**

**Go to step 3.**

**NO**

**Replace the injector.**
**Perform "After-inspection work" of INFORMATION section.**

| 3 | Inspect the air compressor |
|---|---|

1. Check the air compressor for failure.

**Was any failure found?**

**YES**

**Repair or replace the faulty part.**
**Perform "After-inspection work" of INFORMATION section.**

**NO**

**Go to step 4.**

| 4 | Inspect the power steering pump |
|---|---|

1. Check the power steering pump for failure.

**Was any failure found?**

**YES**

**Repair or replace the faulty part.**
**Perform "After-inspection work" of INFORMATION section.**

**NO**

**Go to step 5.**

| 5 | Check the DTC detected [HINO DX II ] |
|---|---|

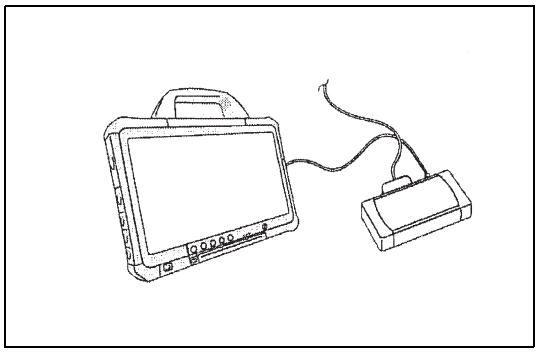

SAPH16F010300543

1. Perform engine warm-up. (engine coolant temperature: 60 °C {140 °F} or more)
2. Stop the engine and set the starter switch to the "ON" position.
3. Select [Engine] and check if the DTC (P054E or P054F) has been detected.

**Has DTC (P054E or P054F) been detected?**

**YES**

**Replace the engine ECU.**
**Perform "After-inspection work" of INFORMATION section.**

**NO**

**Procedure completed.**
**Perform "After-inspection work" of INFORMATION section.**

# DTC: P0562 and P0563

EN01H16F01030F03001089

## P0562: Battery voltage - out of range (Out of range low)

INFORMATION

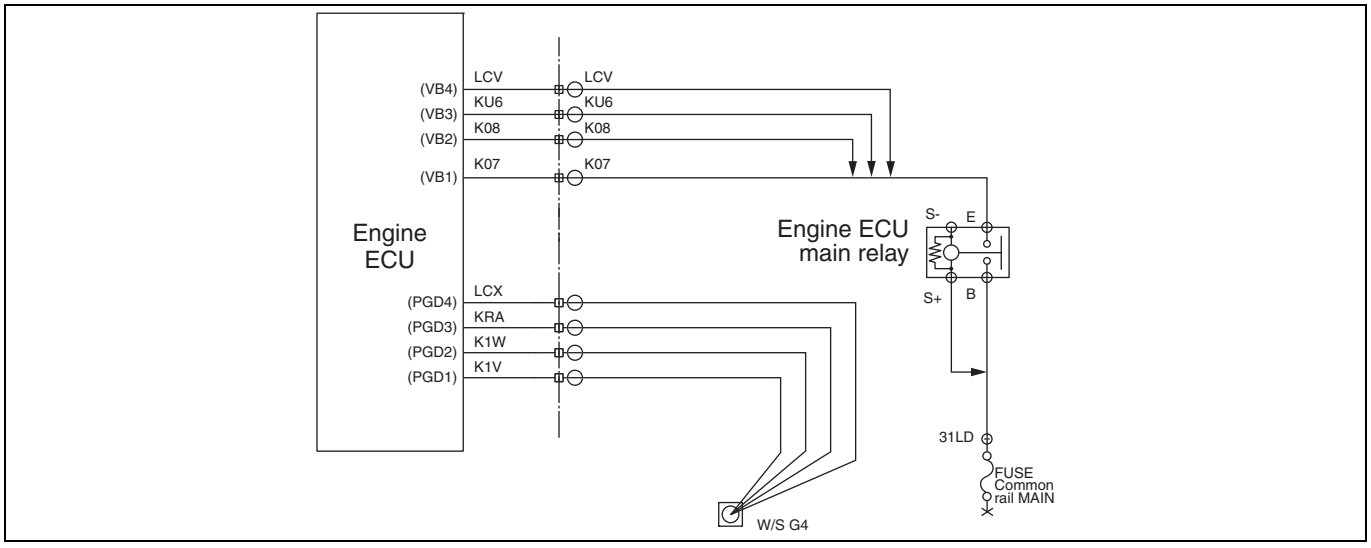


SAPH16F010300544

**1. Technical description**

- –

**<Description of malfunction>**

- Excessive low voltage has been detected in the ECU power supply.

**2. DTC set condition**

(1) DTC detection condition

-

(2) Judgment criteria

- Engine ECU power supply voltage is 10 V or less.
- Failure timer is more than 3 second.

**3. Reset condition**

- After restoration to normal condition.

**4. Indication, warning or system control regulation when the DTC is set.**

- MIL: OFF
- SVS light: ON

**5. Symptoms on the vehicle when the DTC is set**

**<Symptoms on the vehicle due to backup control (fail safe function)>**

- –

**<Symptoms on the vehicle due to malfunction>**

- –

**6. Pre-inspection work**

- Check that the battery voltage is in the normal range.

**7. After-inspection work**

- Clear all past DTCs.
- Check that no DTC is detected after test drive.

**8. Estimated failure factors**

- Fusible Link, FUSE: Fusing, irregular contact, partial engagement
- Connectors, harnesses and terminals: Disconnection, irregular contact, looseness
- Battery: Over discharge, service life
- Alternator: Power generation failure
- ECU: Malfunction

## P0563: Battery voltage - out of range (Out of range high)

INFORMATION

**1. Technical description**

- –

**<Description of malfunction>**

- Excessively high voltage has been detected in the ECU power supply.

**2. DTC set condition**

(1) DTC detection condition

- No other DTC is detected.

(2) Judgment criteria

- Engine ECU power supply voltage is 16 V or more.
- Failure timer is more than 3 second.

**3. Reset condition**

- After restoration to normal condition.

**4. Indication, warning or system control regulation when the DTC is set.**

- MIL: OFF
- SVS light: ON

**5. Symptoms on the vehicle when the DTC is set**

**<Symptoms on the vehicle due to backup control (fail safe function)>**

- –

**<Symptoms on the vehicle due to malfunction>**

- –

**6. Pre-inspection work**

- Check that the battery voltage is in the normal range.

**7. After-inspection work**

- Clear all past DTCs.
- Check that no DTC is stored after test drive.

**8. Estimated failure factors**

- Fusible Link, FUSE: Fusing, irregular contact, partial engagement
- Alternator failure (abnormal voltage or requires adjustment)
- ECU: Malfunction

## INSPECTION PROCEDURE: P0562 and P0563

**1 Inspect the fuse or fusible link**

1. Check for fusing or improper fit.

**Was any failure found?**

**YES**

**Connect the fusible link properly or replace. Perform "After-inspection work" of INFORMATION section.**

**NO**

**Go to step 2.**

**2 Inspect the connection of the battery cable**

1. Check if the battery cable is properly installed (tightly fastened).
- Each battery terminal
- Alternator terminal

**Was any failure found?**

**YES**

**Connect properly. If necessary, repair the cable.**
**Perform "After-inspection work" of INFORMATION section.**

**NO**

**Go to step 3.**

**3 Inspect the alternator**

1. Start the engine.
2. Use the electrical tester to measure the voltage between the alternator B terminal and ground.

| Measurement conditions | Tester connections | Standard values |
|---|---|---|
| Engine idling | Alternator B – Ground | P0562: 13.5 V or more |
| | | P0563: 14.6 V or less |

**Do the measurements meet the standard value?**

**YES**

**Go to step 4.**

**NO**

**Repair or replace the alternator.**
**Perform "After-inspection work" of INFORMATION section.**

## 4 Inspect the engine ECU power supply

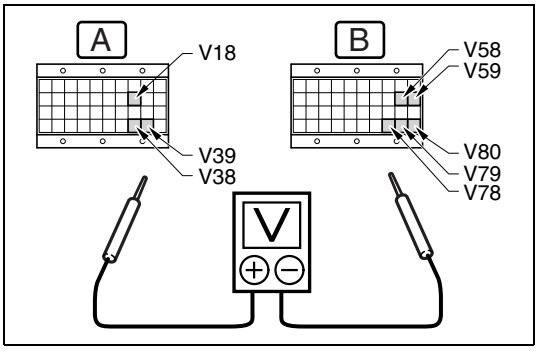


SAPH16F010300545

1. Set the starter switch to the "LOCK" position.
2. Connect the signal check harness to the engine ECU.
3. Start the engine.
4. Use the electrical tester to measure the voltage between the terminals of the engine ECU (signal check harness).

| Measurement conditions | Tester connections | Standard values |
|---|---|---|
| Engine idling | Engine ECU (signal check harness) (+) – (-)<br>VB1(V18) – PGD1(V39)<br>VB2(V38) – PGD2(V59)<br>VB3(V58) – PGD3(V79)<br>VB4(V78) – PGD4(V80) | 10 – 16 V |

**Do the measurements meet the standard value?**

**YES**

**Go to step 5.**

**NO**

**Check the engine ECU wire harness (power supply circuit). Repair or replace parts as needed.**
**Perform "After-inspection work" of INFORMATION section.**

| 5 | Check the DTC detected (Engine ECU) [HINO DX ll ] |
|---|---|

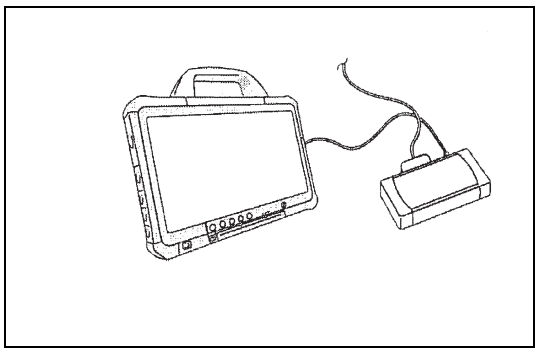

SAPH16F010300546

1. Connect the vehicle to HINO DX II .
2. Set the starter switch to the "ON" position.
3. Select [Engine] and check if the DTC (P0562 or P0563) has been detected.

**Has DTC (P0562 or P0563) been detected?**

**YES**

**Replace the engine ECU.**
**Perform "After-inspection work" of INFORMATION section.**

**NO**

**Procedure completed.**
**Perform "After-inspection work" of INFORMATION section.**

# DTC: P0603

EN01H16F01030F03001090

## P0603: Engine ECU EEPROM fault

INFORMATION

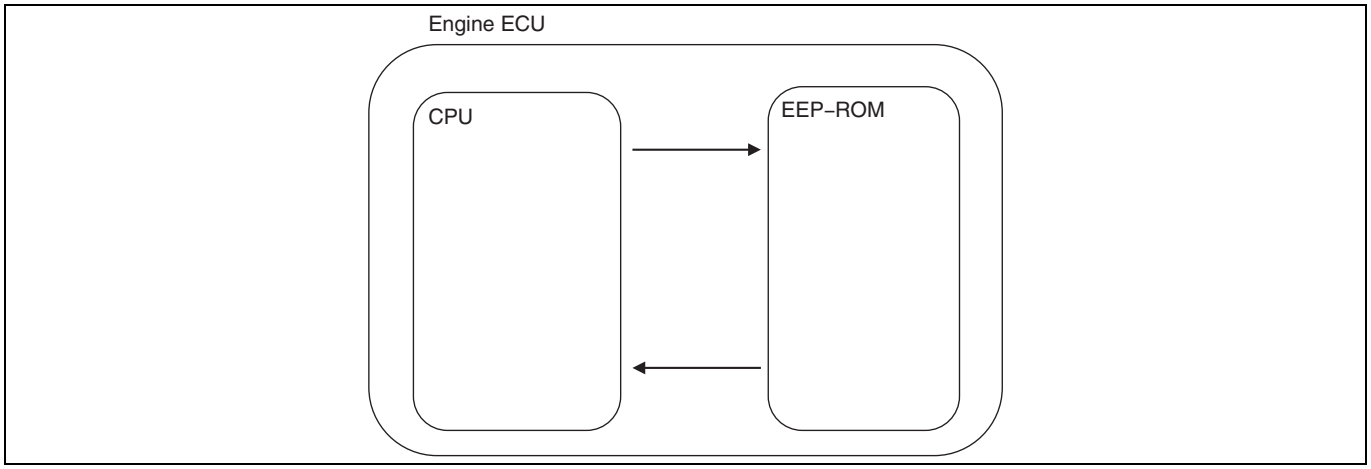


SAPH16F010300547

**1. Technical description**

- The QR compensation value is written with the same data into three areas of the engine ECU EEPROM storage; an EEPROM fault is detected when the stored date do not match.

**<Description of malfunction>**

- –

**2. DTC set condition**

(1) DTC detection condition

- Starter switch ON.
- Battery voltage is in the range of 10 V to 16 V.

(2) Judgment criteria

| Item | Details (Reference) |
|---|---|
| **1. EEPROM failure** | **Data saved in the 3 EEPROM sectors do not match.** |

**3. Reset condition**

- Immediately after restoration to normal condition.

**4. Indication, warning or system control regulation when the DTC is set.**

- MIL: ON
- SVS light: OFF

**5. Symptoms on the vehicle when the DTC is set**

**<Symptoms on the vehicle due to backup control (fail safe function)>**

- –

**<Symptoms on the vehicle due to malfunction>**

- –

**6. Pre-inspection work**

- Check that the battery voltage is in the normal range.

**7. After-inspection work**

- Clear all past DTCs.
- Check that no DTC is detected after test drive.

**8. Estimated failure factors**

- Engine ECU failure

## INSPECTION PROCEDURE: P0603

| 1 | Check injector replaced record |
|---|---|

1. Check injector replaced record.

**Does the injector have a replacement record?**

**YES**

**(When it has a record or unclear)**
**Go to step 3.**

**NO**

**(When it has not a record)**
**Go to step 2.**

| 2 | Inspection of QR code [HINO DX II ] |
|---|---|

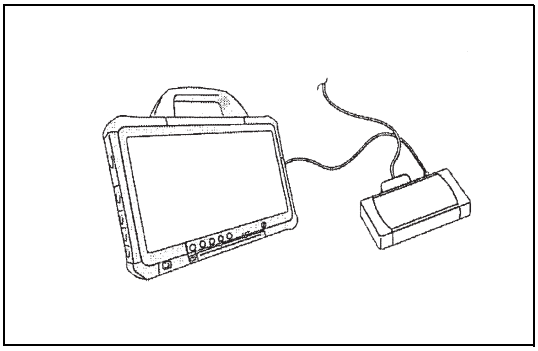

SAPH16F010300548

1. Re-input the registration QR code data of the service server.
2. Erase the DTC memory, and recheck DTC code.
   Confirm that DTC code P0603 is not detected.

**Has DTC P0603 been detected?**

**YES**

**Go to step 3.**

**NO**

**Procedure completed.**
**Perform "After-inspection work" of INFORMATION section.**

| 3 | Inspection of QR code [HINO DX II ] |
|---|---|

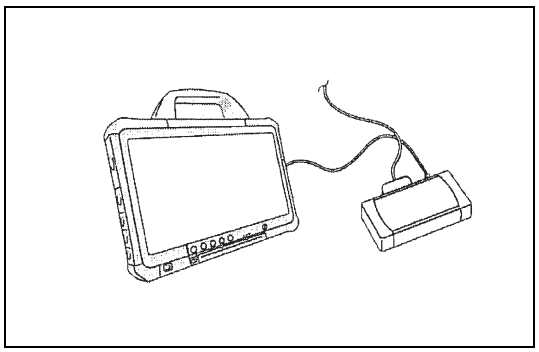

SAPH16F010300549

1. Read the QR code date of the injectors by using HINO DX II , re-input QR code data.

2. Erase the DTC memory, and recheck DTC code.
   Confirm that DTC code P0603 is not detected.

**Has DTC P0603 been detected?**

**YES**

**Replace the engine ECU.**
**Perform "After-inspection work" of INFORMATION section.**

**NO**

**Procedure completed.**
**Perform "After-inspection work" of INFORMATION section.**

# DTC: P0605

EN01H16F01030F03001091

## P0605: Flash ROM error

INFORMATION

**1. Technical description**

- Engine ECU flash ROM failure is detected.

**<Description of malfunction>**

- –

**2. DTC set condition**

(1) DTC detection condition

- Starter switch ON.

(2) Judgment criteria

- Flash ROM check sum error
- Failure determination time ≥ 96 msec

**3. Reset condition**

- After restoration to normal condition and starter switch "OFF".

**4. Indication, warning or system control regulation when the DTC is set.**

- MIL: ON
- SVS light: OFF
- Engine output is restricted.
- Cruise control function is not available.
- Idling stop system is not available.
- Vehicle start control is not available.
- PTO is not available

**5. Symptoms on the vehicle when the DTC is set**

**<Symptoms on the vehicle due to backup control (fail safe function)>**

- Engine output is insufficient.
- Cruise control does not work.
- Idling stop system does not work.
- Vehicle start control does not work.
- PTO cannot be used.

**<Symptoms on the vehicle due to malfunction>**

- –

**6. Pre-inspection work**

- Check that the battery voltage is in the normal range.

**7. After-inspection work**

- Clear all past DTCs.
- Check that no DTC is stored after test drive.

**8. Estimated failure factors**

- Malfunction of engine ECU circuit.
- Temporary malfunction caused by radio wave interference or noise.

## INSPECTION PROCEDURE: P0605

| 1 | Inspect the engine ECU circuit [HINO DX II ] |
|---|---|

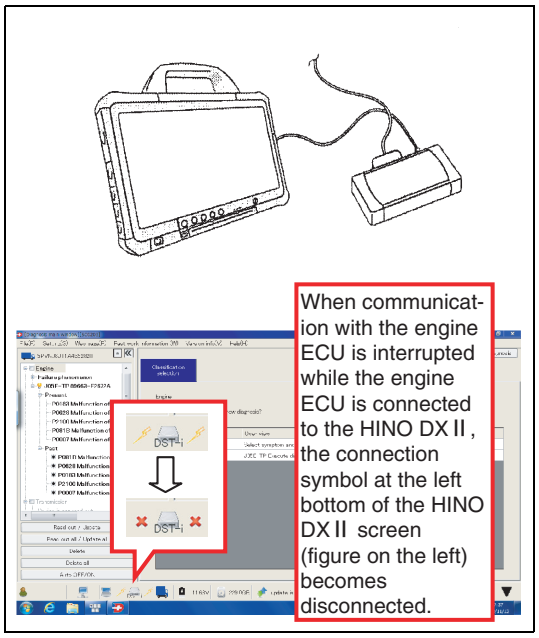


SAPH16F010300550

1. Connect the vehicle to HINO DX II .
2. Set the starter switch to the "ON" position.
3. Select [Engine] and check the communication between HINO DX II and the engine ECU.
4. Erase the trouble history.
5. Set the starter switch to the "LOCK" position.
6. Make sure the engine ECU main relay is OFF in HINO DX II menu. (This cuts off the communication between HINO DX II and the engine ECU.)
7. Set the starter switch to the "ON" position.
8. Select [Engine] and check if P0605 has been detected.

**Has DTC P0605 been detected?**

**YES**

**Replace the engine ECU.**
**Perform "After-inspection work" of INFORMATION section.**

**NO**

**Procedure completed.**
**(Temporary operating error due to radio wave interference or noise.)**
**Perform "After-inspection work" of INFORMATION section.**

# DTC: P0606

EN01H16F01030F03001092

## P0606: Control module processor

INFORMATION

**1. Technical description**

- Engine ECU internal failure is detected.

**<Description of malfunction>**

- –

**2. DTC set condition**

(1) DTC detection condition

- Starter switch ON.

(2) Judgment criteria

- IC for monitoring microcomputer failure inside ECU is detected.
- Failure determination time ≥ 96 msec

**3. Reset condition**

- After restoration to normal condition and starter switch "OFF".

**4. Indication, warning or system control regulation when the DTC is set.**

- MIL: OFF
- SVS light: ON
- Engine is stopped.

**5. Symptoms on the vehicle when the DTC is set**

**<Symptoms on the vehicle due to backup control (fail safe function)>**

- Engine is stopped.

**<Symptoms on the vehicle due to malfunction>**

- Engine is stalled.

**6. Pre-inspection work**

- Check that the battery voltage is in the normal range.

**7. After-inspection work**

- Clear all past DTCs.
- Check that no DTC is detected after test drive.

**8. Estimated failure factors**

- Malfunction of engine ECU circuit.
- Temporary malfunction caused by radio wave interference or noise.

## INSPECTION PROCEDURE: P0606

| 1 | Inspect the engine ECU circuit [HINO DX II ] |
|---|---|

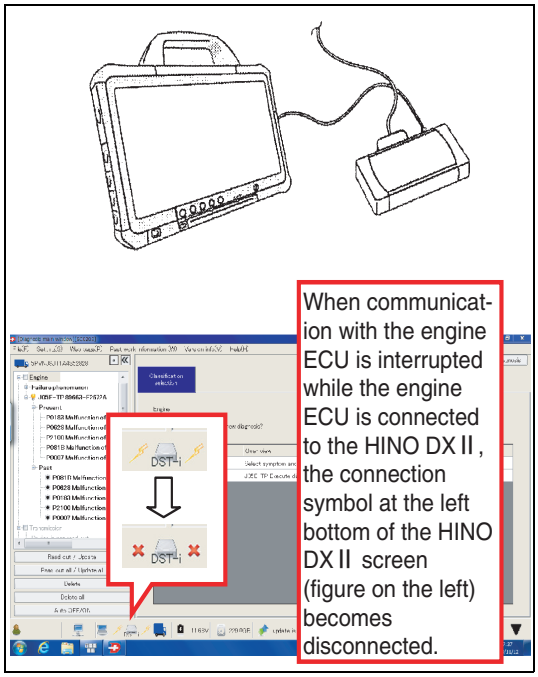


SAPH16F010300551

1. Connect the vehicle to HINO DX II .
2. Set the starter switch to the "ON" position.
3. Select [Engine] in HINO DX II menu and check the communication between HINO DX II and the engine ECU.
4. Erase the trouble history.
5. Set the starter switch to the "LOCK" position.
6. Make sure the engine ECU main relay is OFF in HINO DX II menu. (This cuts off the communication between HINO DX II and the engine ECU.)
7. Set the starter switch to the "ON" position.
8. Select [Engine] and check if P0606 has been detected.

**Has DTC P0606 been detected?**

**YES**

**Replace the engine ECU.**
**Perform "After-inspection work" of INFORMATION section.**

**NO**

**Procedure completed.**
**(Temporary operating error due to radio wave interference or noise.)**
**Perform "After-inspection work" of INFORMATION section.**

# DTC: P0607

EN01H16F01030F03001093

## P0607: Control module performance

INFORMATION

**1. Technical description**

- Engine ECU internal failure is detected.

**<Description of malfunction>**

- –

**2. DTC set condition**

(1) DTC detection condition

- Starter switch ON.

(2) Judgment criteria

- Failure of IC for monitoring inside engine ECU is detected.
- Failure determination time ≥ 96 msec

**3. Reset condition**

- After restoration to normal condition and starter switch "OFF".

**4. Indication, warning or system control regulation when the DTC is set.**

- MIL: OFF
- SVS light: ON
- Engine output is restricted.
- Cruise control function is not available.
- Idling stop system is not available.
- Vehicle start control is not available.
- PTO is not available.

**5. Symptoms on the vehicle when the DTC is set**

**<Symptoms on the vehicle due to backup control (fail safe function)>**

- Engine output is insufficient.
- Cruise control does not work.
- Idling stop system does not work.
- Vehicle start control does not work.
- PTO cannot be used.

**<Symptoms on the vehicle due to malfunction>**

- –

**6. Pre-inspection work**

- Check that the battery voltage is in the normal range.

**7. After-inspection work**

- Clear all past DTCs.
- Check that no DTC is stored after test drive.

**8. Estimated failure factors**

- Malfunction of engine ECU circuit.
- Temporary malfunction caused by radio wave interference or noise

## INSPECTION PROCEDURE: P0607

| 1 | Inspect the engine ECU circuit [HINO DX II ] |
|---|---|

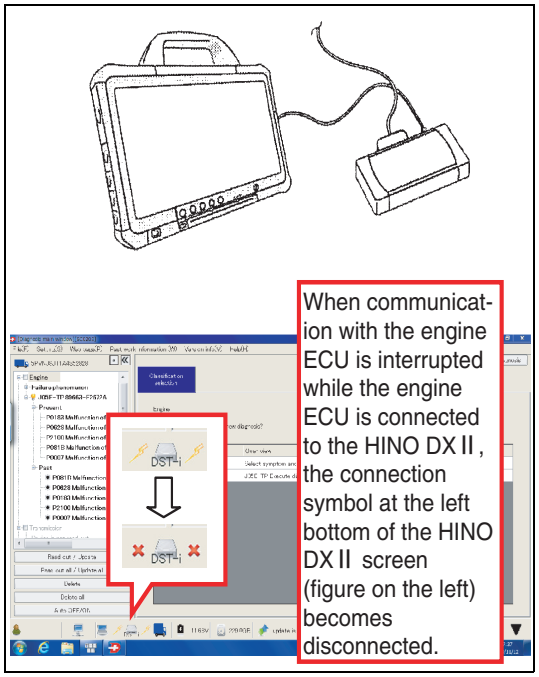


SAPH16F010300552

1. Connect the vehicle to HINO DX II .
2. Set the starter switch to the "ON" position.
3. Select [Engine] in HINO DX II menu and check the communication between HINO DX II and the engine ECU.
4. Erase the trouble history.
5. Set the starter switch to the "LOCK" position.
6. Make sure the engine ECU main relay is OFF in HINO DX II menu. (This cuts off the communication between HINO DX II and the engine ECU.)
7. Set the starter switch to the "ON" position.
8. Select [Engine] and check if P0607 has been detected.

**Has DTC P0607 been detected?**

**YES**

**Replace the engine ECU.**
**Perform "After-inspection work" of INFORMATION section.**

**NO**

**Procedure completed.**
**(Temporary operating error due to radio wave interference or noise.)**
**Perform "After-inspection work" of INFORMATION section.**

# DTC: P0610

EN01H16F01030F03001094

## P0610: VIN data error

INFORMATION

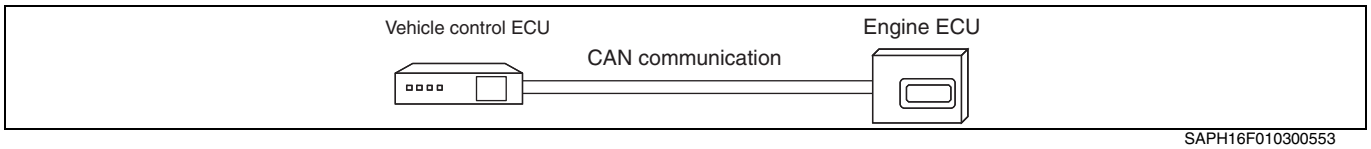


SAPH16F010300553

**1. Technical description**

- Receipt of vehicle information (VIN) is detected.

**<Description of malfunction>**

- Vehicle information is not received or the wrong vehicle information is received.

**2. DTC set condition**

(1) DTC detection condition

- Starter switch ON.
- Battery voltage is in the range of 10 V to 16 V.

The conditions described above remain for 5 seconds or longer.

**HINT**

**This DTC is detected when replacing the engine ECU and the VIN information from the vehicle control ECU has not been received.**

(2) Judgment criteria

- Engine ECU can not receive VIN information from the vehicle control ECU.

**3. Reset condition**

- After normal operation is restored and the starter switch is on the "LOCK" position.

**4. Indication, warning or system control regulation when the DTC is set.**

- MIL: OFF
- SVS light: ON
- Engine output is restricted.

**5. Symptoms on the vehicle when the DTC is set**

**<Symptoms on the vehicle due to backup control (fail safe function)>**

- Engine output is insufficient.

**<Symptoms on the vehicle due to malfunction>**

- –

**6. Pre-inspection work**

- Check that the battery voltage is in the normal range.

**7. After-inspection work**

- Clear all past DTCs.
- Check that no DTC is stored after test drive.

**8. Estimated failure factors**

- Vehicle control ECU failure
- Engine ECU failure
- Malfunction of vehicle power supply (noise)
- CAN circuit failure (noise)

## INSPECTION PROCEDURE: P0610

| 1 | Check the DTC detected 1 (Engine ECU) [HINO DX II ] |
|---|---|

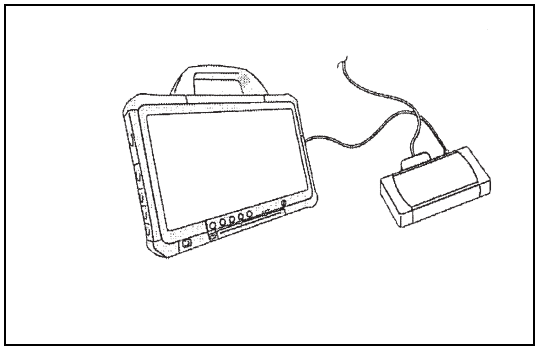

SAPH16F010300554

1. Set the starter switch to the "LOCK" position.
2. Connect the vehicle to HINO DX II .
3. Set the starter switch to the "ON" position.
4. Select [Engine] and check if any DTC other than P0610 (for example, U1001, U110A) has been detected.

**Has a DTC other than P0610 been detected?**

**YES**

**Go to the diagnostic procedure of a related DTC.**

**NO**

**Go to step 2.**

| 2 | Inspect the vehicle Information [HINO DX II ] |
|---|---|

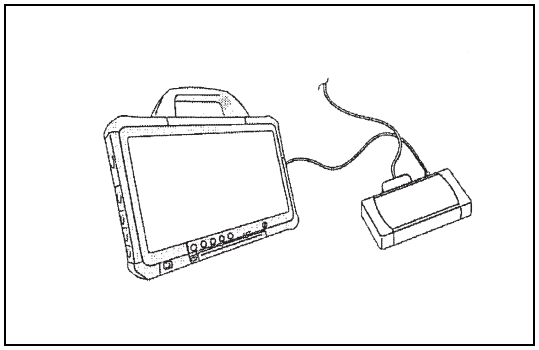

SAPH16F010300555

1. Select [VCS] and read the vehicle information (VIN) written in the Vehicle control ECU.
2. Compare the data with the vehicle's VIN LABEL, and check if the vehicle information (VIN) that has been written to the Vehicle control ECU is correct.

**Is the vehicle Information (VIN) in the vehicle control ECU correct?**

**YES**

**Go to step 4.**

**NO**

**Go to step 3.**

| 3 | Reprogram the vehicle control ECU [HINO DX II ] |
|---|---|

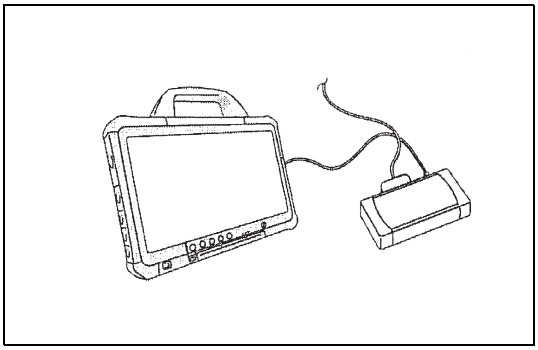

SAPH16F010300556

1. Perform Vehicle control ECU reprogramming by using HINO DX II reprogramming function.
2. Select [Engine] from the HINO DX II menu, and read the DTC that has been detected.

**Has DTC P0610 been detected?**

**YES**

**Replace the vehicle control ECU.**
**Perform "After-inspection work" of INFORMATION section.**

**NO**

**Procedure completed.**
**Perform "After-inspection work" of INFORMATION section.**

| 4 | Reprogram the Engine ECU [HINO DX II ] |
|---|---|

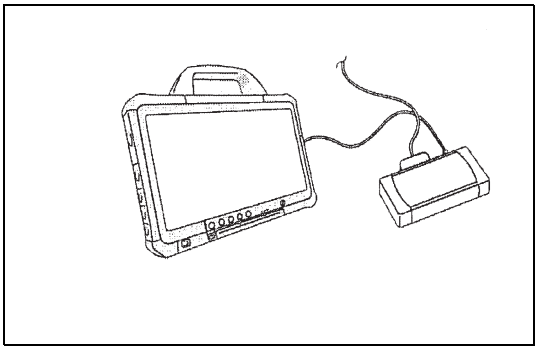

SAPH16F010300557

1. Perform engine ECU reprogramming by using HINO DX II reprogramming function.
2. Select [Engine] from the HINO DX II menu, and read the DTC that has been detected.

**Has DTC P0610 been detected?**

**YES**

**Replace the engine ECU.**
**Perform "After-inspection work" of INFORMATION section.**

**NO**

**Procedure completed.**
**Perform "After-inspection work" of INFORMATION section.**

# DTC: P0611

EN01H16F01030F03001095

## P0611: Fuel injector driver charge circuit - circuit (circuit low)

INFORMATION

**1. Technical description**

- –

**<Description of malfunction>**

- Low voltage failure of injector actuation charging circuit is detected.

**2. DTC set condition**

(1) DTC detection condition

- Starter switch ON.
- Battery voltage is in the range of 10 V to 16 V.
- With the injector not operating

(2) Judgment criteria

- Injector driver charge circuit voltage is 55 V or less.
- Failure judgment time is 0.096 sec or more.

**3. Reset condition**

- After normal operation is restored and engine is restarted after engine stall.

**4. Indication, warning or system control regulation when the DTC is set.**

- MIL: ON
- SVS light: OFF
- Engine output is restricted.
- Cruise control function is not available.
- Idling stop system is not available.
- Vehicle start control is not available.
- PTO is not available.

**5. Symptoms on the vehicle when the DTC is set**

**<Symptoms on the vehicle due to backup control (fail safe function)>**

- Engine output is insufficient.
- Cruise control does not work.
- Idling stop system does not work.
- Vehicle start control does not work.
- PTO cannot be used.

**<Symptoms on the vehicle due to malfunction>**

- –

**6. Pre-inspection work**

- Check that the battery voltage is in the normal range.

**7. After-inspection work**

- Clear all past DTCs.
- Check that no DTC is stored after test drive.

**8. Estimated failure factors**

- Engine ECU failure
- Temporary operating error due to radio wave interference or noise.

## INSPECTION PROCEDURE: P0611

| 1 | Inspect the engine ECU circuit [HINO DX II ] |
|---|---|

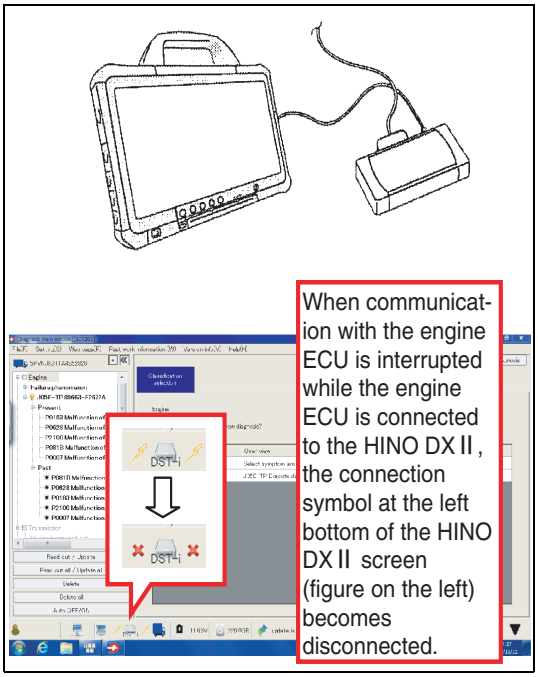


SAPH16F010300558

1. Connect the vehicle to HINO DX II .
2. Set the starter switch to the "ON" position.
3. Select [Engine] in HINO DX II menu and check the communication between HINO DX II and the engine ECU.
4. Erase the trouble history.
5. Set the starter switch to the "LOCK" position.
6. Make sure the engine ECU main relay is OFF in HINO DX II menu. (This cuts off the communication between HINO DX II and the engine ECU.)
7. Set the starter switch to the "ON" position.
8. Select [Engine] and check if P0611 has been detected.

**Has DTC P0611 been detected?**

**YES**

**Replace the engine ECU.**
**Perform "After-inspection work" of INFORMATION section.**

**NO**

**Procedure completed.**
**(Temporary operating error due to radio wave interference or noise.)**
**Perform "After-inspection work" of INFORMATION section.**

# DTC: P0617

EN01H16F01030F03001096

## P0617: Starter switch - rationality

INFORMATION

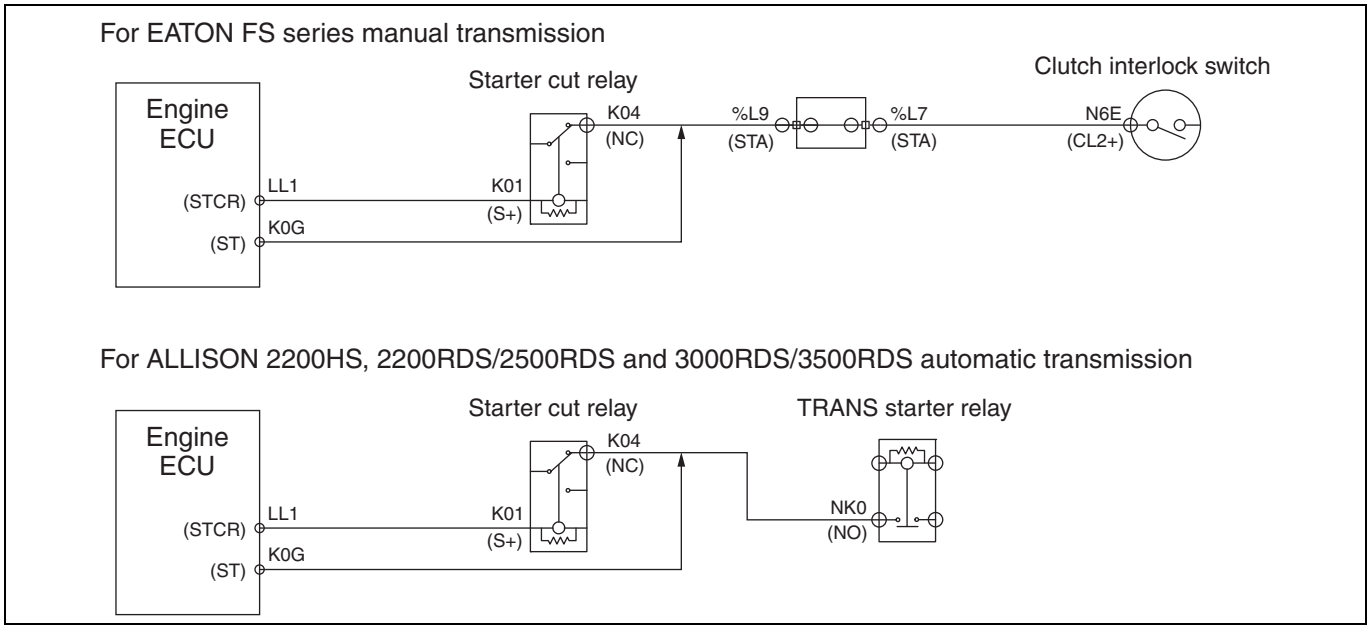


SAPH16F010300559

**1. Technical description**

- Engine ECU detects the starter signal while the engine is running (START position signal).

**<Description of malfunction>**

- +B short-circuit has occurred in the starter switch.

**2. DTC set condition**

(1) DTC detection condition

- Starter switch ON.
- Battery voltage is in the range of 10 V to 16 V
- Engine speed is 1,100 r/min or more.

(2) Judgment criteria

- The starter switch remains ON for 30 seconds or longer.

**3. Reset condition**

- After normal operation is restored and engine is restarted after engine stall.

**4. Indication, warning or system control regulation when the DTC is set.**

- MIL: ON
- SVS light: OFF

**5. Symptoms on the vehicle when the DTC is set**

**<Symptoms on the vehicle due to backup control (fail safe function)>**

- –

**<Symptoms on the vehicle due to malfunction>**

- –

**6. Pre-inspection work**

- Check that the battery voltage is in the normal range.

**7. After-inspection work**

- Clear all past DTCs.
- Check that no DTC is stored after test drive.

**8. Estimated failure factors**

- Malfunction of starter switch.
- Harness disconnection or short-circuit.

## INSPECTION PROCEDURE: P0617

| 1 | Inspect the starter switch "Start" signal |
|---|---|

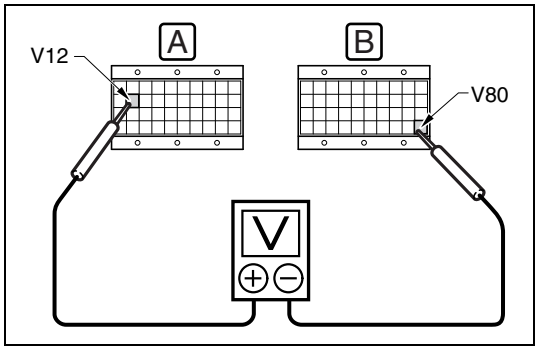

SAPH16F010300560

1. Set the starter switch to the "LOCK" position.
2. Connect the signal check harness to the engine ECU vehicle-side harness. (Do not connect the harness to the ECU.)
3. Use the electrical tester to measure the voltage between the engine ECU (signal check harness) terminals first with the starter switch to the "LOCK" position and then with the starter switch in the "START" position.

| Measurement conditions | Tester connections | Standard values |
|---|---|---|
| Starter switch: START/LOCK | Engine ECU (signal check harness) ST(V12) – PGD4(V80) | Starter switch "LOCK": 0 V<br>Starter switch "START": 12 V |

**Do the measurements meet the standard value?**

**YES**

**Replace the engine ECU**
**Perform "After-inspection work" of INFORMATION section.**

**NO**

**TRANS vehicle: Go to step 2.**
**MT vehicle: Go to step 3.**

| 2 | Inspect the wire harness of the starter switch "Start" signal (TRANS models) |
|---|---|

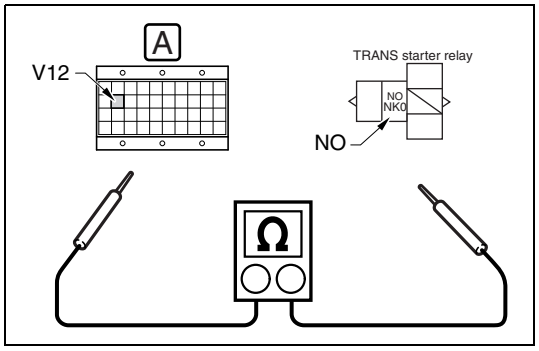

SAPH16F010300561

1. Set the starter switch to the "LOCK" position.
2. Disconnect the TRANS starter relay (fuse and relay block B interior).
3. Use the electrical tester to measure the resistance between the engine ECU (signal check harness) and the terminals in the ATM starter relay connector.

| Measurement conditions | Tester connections | Standard values |
|---|---|---|
| Starter switch: LOCK | Engine ECU (signal check harness) – TRANS starter relay connector ST(V12) – NO | Less than 1 Ω |

**Do the measurements meet the standard value?**

**YES**

**Check the starter switch "Start" circuit.**
**Perform "After-inspection work" of INFORMATION section.**

**NO**

**Repair or replace the harness.**
**Perform "After-inspection work" of INFORMATION section.**

| 3 | Inspect the wire harness of the starter switch "Start" signal (MT models) |
|---|---|

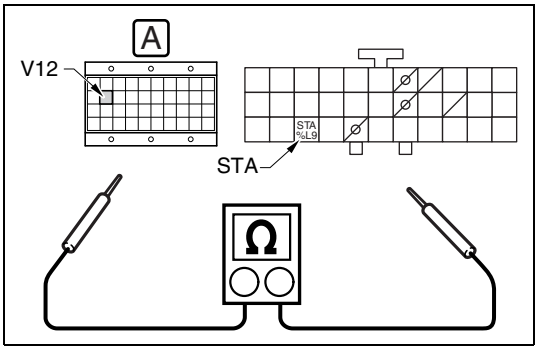


SAPH16F010300562

1. Set the starter switch to the "LOCK" position.
2. Disconnect the Common rail_J/C No. 2 connector.
3. Use the electrical tester to measure the resistance between the engine ECU (signal check harness) and the terminals in the Common rail_J/C_No. 2 connector.

| Measurement conditions | Tester connections | Standard values |
|---|---|---|
| Starter switch: LOCK | Engine ECU (signal check harness) – Common rail_J/C_No.2 connector ST(V12) – STA | Less than 1 Ω |

**Do the measurements meet the standard value?**

**YES**

**Inspect the starter switch "Start" circuit.**
**Perform "After-inspection work" of INFORMATION section.**

**NO**

**Repair or replace the harness.**
**Perform "After-inspection work" of INFORMATION section.**

# DTC: P0628 and P0629

EN01H16F01030F03001097

## P0628: Suction control valve for fuel supply pump - circuit (Circuit low)

INFORMATION

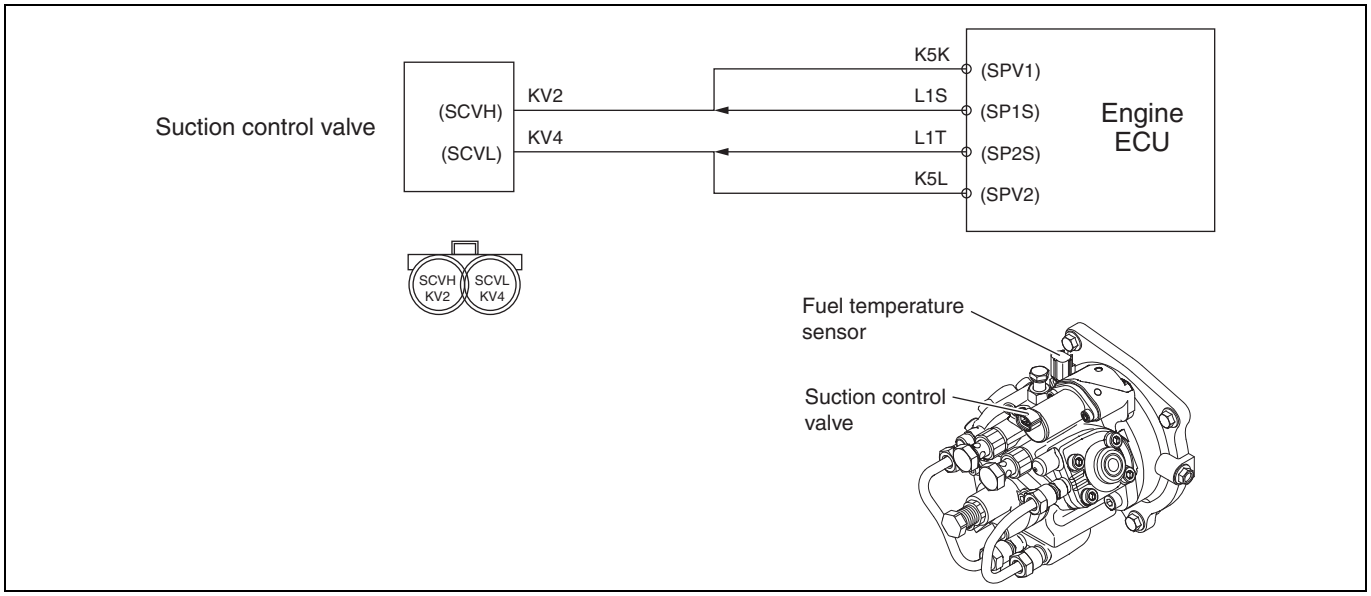


SAPH16F010300563

**1. Technical description**

- The supply pump controls a fuel delivery quantity to control common rail pressure.

**<Description of malfunction>**

- Abnormal voltage of supply pump magnetic valve (suction control valve) is detected. Possible disconnection or GND short-circuit.

**2. DTC set condition**

(1) DTC detection condition

- Starter switch ON.
- Battery voltage is in the range of 10 V to 16 V.
- The engine has stopped or runs at 500 r/min or higher.
- The injectors and injector driver circuits have started running.

The conditions described above remain for 5 seconds.

(2) Judgment criteria

- SCV (suction control valve) drive current remains less than 500 mA for 2.1 seconds.

**3. Reset condition**

- After restoration to normal condition and starter switch "OFF".

**4. Indication, warning or system control regulation when the DTC is set.**

- MIL: ON
- SVS light: OFF
- Engine output is restricted.

**5. Symptoms on the vehicle when the DTC is set**

**<Symptoms on the vehicle due to backup control (fail safe function)>**

- Engine output is insufficient.

**<Symptoms on the vehicle due to malfunction>**

- –

**6. Pre-inspection work**

- Check that the battery voltage is in the normal range.

**7. After-inspection work**

- Clear all past DTCs.
- Check that no DTC is stored after test drive.

**8. Estimated failure factors**

- Harness disconnection or short-circuit
- Looseness or poor contact of connector
- Supply pump (SCV) unit failure
- Engine ECU malfunction

## P0629: Suction control valve for fuel supply pump - circuit (Circuit high)

INFORMATION

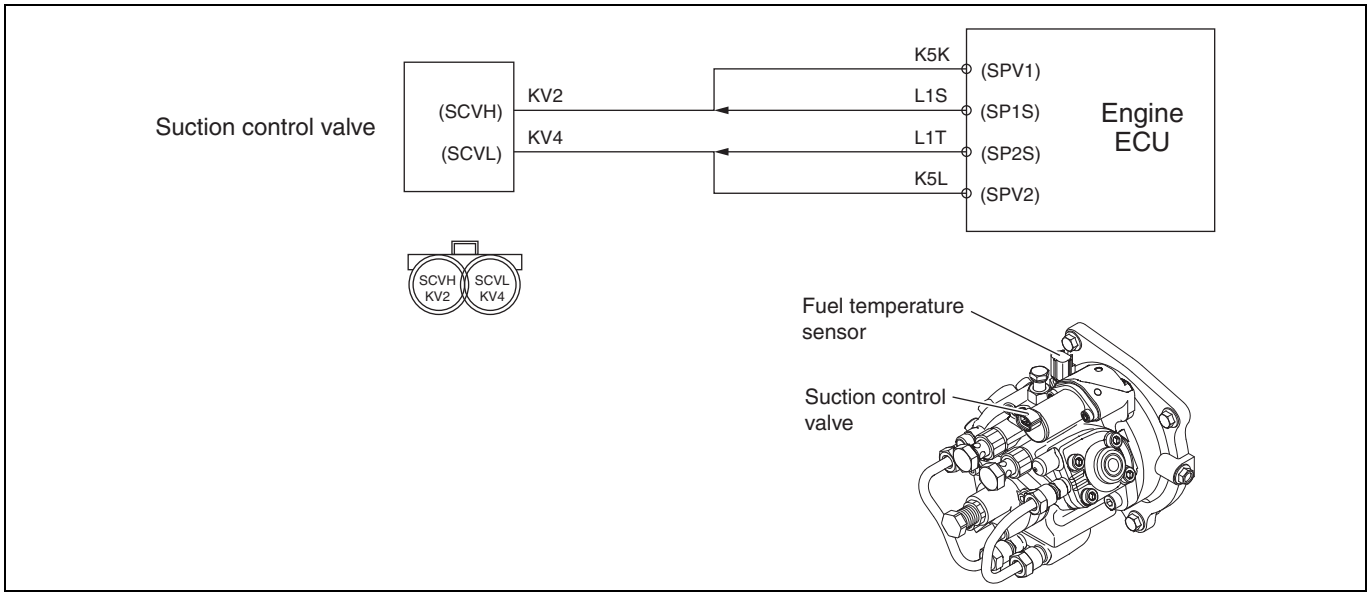


SAPH16F010300564

**1. Technical description**

- The supply pump controls a fuel delivery quantity to control common rail pressure.

**<Description of malfunction>**

- Abnormal voltage of supply pump magnetic valve (suction control valve) is detected. Possible +B short.

**2. DTC set condition**

(1) DTC detection condition

- Starter switch ON.
- Battery voltage is in the range of 10 V to 16 V.
- The engine has stopped or runs at 500 r/min or higher.
- The injectors and injector driver circuits have started running.

The conditions described above remain for 5 seconds.

(2) Judgment criteria

- SCV (suction control valve) drive current remains less than 1,900 mA for 2.1 seconds.

**3. Reset condition**

- After restoration to normal condition and starter switch "OFF".

**4. Indication, warning or system control regulation when the DTC is set.**

- MIL: ON
- SVS light: OFF
- Engine output is restricted.
- Cruise control function is not available.
- Idling stop system is not available.
- PTO is not available.

**5. Symptoms on the vehicle when the DTC is set**

**<Symptoms on the vehicle due to backup control (fail safe function)>**

- Engine output is insufficient.
- Cruise control does not work.
- Idling stop system does not work.
- PTO cannot be used.

**<Symptoms on the vehicle due to malfunction>**

- –

**6. Pre-inspection work**

- Check that the battery voltage is in the normal range.

**7. After-inspection work**

- Clear all past DTCs.
- Check that no DTC is stored after test drive.

**8. Estimated failure factors**

- Harness disconnection or short-circuit
- Looseness or poor contact of connector
- Supply pump (SCV) unit failure
- Engine ECU malfunction

## INSPECTION PROCEDURE: P0628 and P0629

| 1 | Inspect the suction control valve (SCV) connector |
|---|---|

1. Check the connection of the suction control valve (SCV) connector (Looseness and poor contact).

**Was any failure found?**

**YES**

**Connect securely, repair if needed.**
**Perform "After-inspection work" of INFORMATION section.**

**NO**

**Go to step 2.**

| 2 | Inspect the suction control valve (SCV) unit |
|---|---|

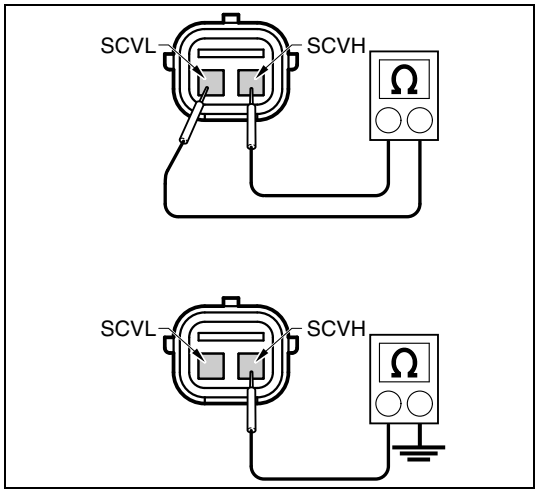

SAPH16F010300565

1. Set the starter switch to the "LOCK" position.
2. Disconnect the SCV connector.
3. Use the electrical tester to measure the resistance between the terminals of the suction control valve.
4. Use the electrical tester to measure the resistance between the suction control valve terminal and ground.

| Measurement conditions | Tester connections | Standard values |
|---|---|---|
| Starter switch: LOCK | Suction control valve<br>(1) SCVH – SCVL<br>(2) SCVH – Ground<br>(3) SCVL – Ground | (1) 20 °C {68 °F}: 1.6 – 2.6 Ω<br>(2), (3) 20 °C {68 °F}: 100 MΩ or more |

**Do the measurements meet the standard value?**

**YES**

**Go to step 3.**

**NO**

**Replace the SCV.**
**Perform "After-inspection work" of INFORMATION section.**

| 3 | Inspect for short-circuit in wire harness of suction control valve |
|---|---|

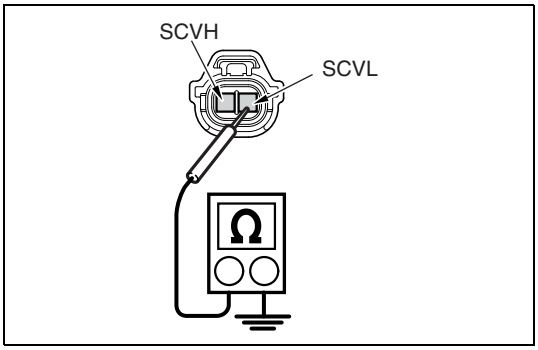

SAPH16F010300566

1. Set the starter switch to the "LOCK" position.
2. Disconnect the engine ECU connector.
3. Use the electrical tester to measure the resistance between the suction control valve vehicle-side connector terminals and ground.

| Measurement conditions | Tester connections | Standard values |
|---|---|---|
| Starter switch: LOCK | Suction control valve vehicle-side connector SCVH – Ground<br>SCVL – Ground | ∞ Ω |

**Do the measurements meet the standard value?**

**YES**

**Go to step 4.**

**NO**

**Repair or replace the harness.**
**Perform "After-inspection work" of INFORMATION section.**

| 4 | Inspect for disconnection in wire harness of suction control valve |
|---|---|

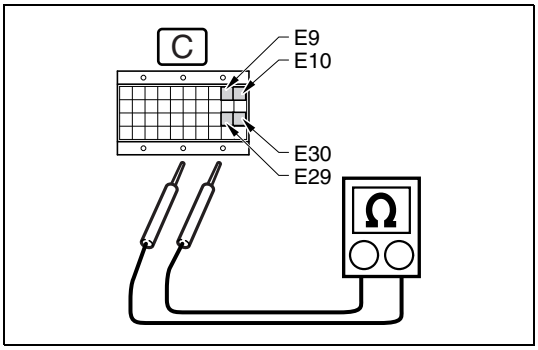

SAPH16F010300567

1. Set the starter switch to the "LOCK" position.
2. Connect the SCV connector.
3. Connect the signal check harness to the engine ECU vehicle-side harness. (Do not connect the harness to the ECU.)
4. Use the electrical tester to measure the resistance between the terminals of the engine ECU (signal check harness) terminals.

| Measurement conditions | Tester connections | Standard values |
|---|---|---|
| Starter switch: LOCK | Engine ECU (signal check harness) SPV1(E9) – SP2S(E30)<br>SPV1(E9) – SPV2(E10)<br>SP1S(E29) – SP2S(E30)<br>SP1S(E29) – SPV2(E10) | 20 °C {68 °F}: 1.6 – 2.6 Ω |

**Do the measurements meet the standard value?**

**YES**

**Go to step 5.**

**NO**

**Repair or replace the harness.**
**Perform "After-inspection work" of INFORMATION section.**

| 5 | **Check the DTC detected (Engine ECU) [HINO DX ll ]** |
|---|---|

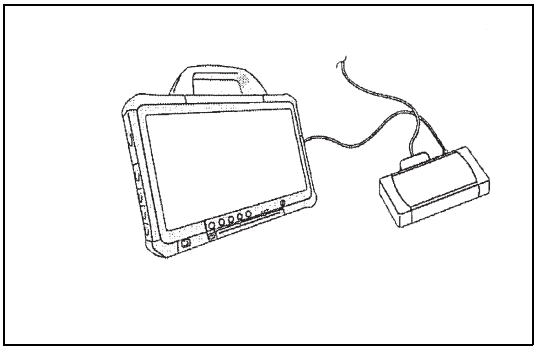

SAPH16F010300568

1. Warm-up the engine. (engine coolant temperature: 60 °C {140 °F} or more)
2. Stop the engine and set the starter switch to the "LOCK" position.
3. Connect the vehicle to HINO DX II .
4. Set the starter switch to the "ON" position.
5. Select [Engine] and check if the DTC (P0628 or P0629) has been detected.

**Has DTC (P0628 or P0629) been detected?**

**YES**

**Replace the engine ECU.**
**Perform "After-inspection work" of INFORMATION section.**

**NO**

**Procedure completed.**
**Perform "After-inspection work" of INFORMATION section.**

# DTC: P062F

EN01H16F01030F03001098

## P062F: Controller store data error (VNT actuator EEPROM error)

INFORMATION

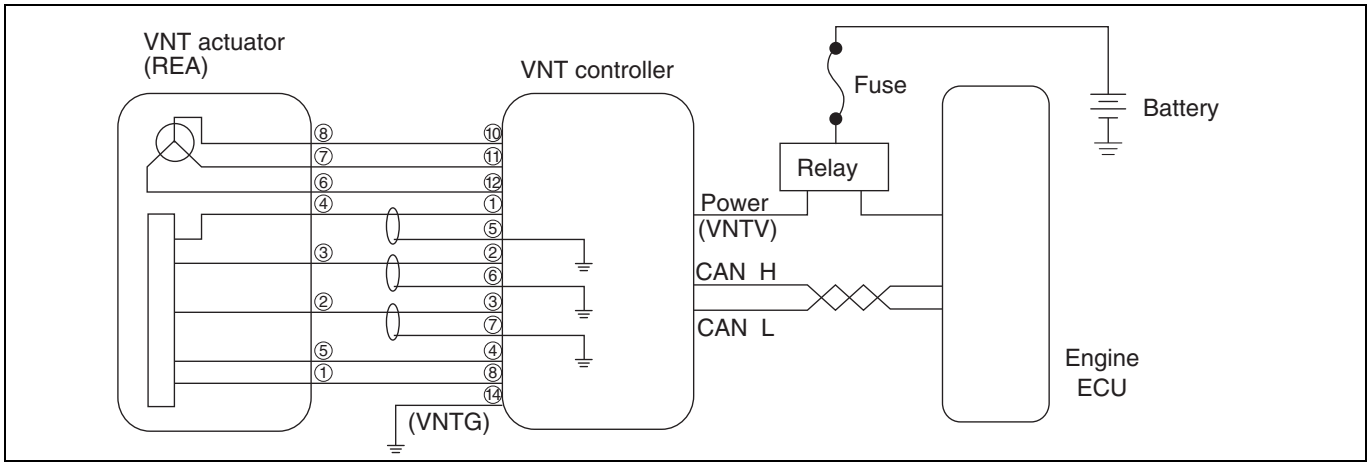


SAPH16F010300569

**1. Technical description**

- The VNT actuator steplessly operates the nozzle via the REA (Rotary Electric Actuator) and controls turbine speed and boost pressure.
- The VNT actuator (REA) has a position sensor and constantly monitors the target opening and the actual opening.
- Wiping operation is carried out when the engine is stopped and the soot, oil, and other impurities accumulated in the vane working range are removed. Also, the turbocharger mechanical working range is checked for trouble.

**<Description of malfunction>**

- –

**2. DTC set condition**

(1) DTC detection condition

- While the engine is in operation: Always
- While the engine is stopped: During wiping operation

(2) Judgment criteria

| Item | Details (Reference) |
|---|---|
| 1. EEPROM failure | Data saved in the 3 EEPROM sectors do not match. |

**3. Reset condition**

- After normal operation is restored and the starter switch is turned OFF.

**4. Indication, warning or system control regulation when the DTC is set.**

- MIL: ON
- SVS light: OFF
- Engine output is restricted.
- Cruise control is not available.
- Auxiliary brake function is not available.

**5. Symptoms on the vehicle when the DTC is set**

**<Symptoms on the vehicle due to backup control (fail safe function)>**

- Engine output is insufficient.
- Cruise control does not work.
- Auxiliary brake does not work.

**<Symptoms on the vehicle due to malfunction>**

- –

**6. Pre-inspection work**

- Check that the battery voltage is in the normal range.

**7. After-inspection work**

- Clear all past DTCs.
- Check that no DTC is detected after test drive.

**8. Estimated failure factors**

- EEPROM failure inside controller

## INSPECTION PROCEDURE: P062F

| 1 | Check the DTC detected 1 (Engine ECU) [HINO DX II ] |
|---|---|

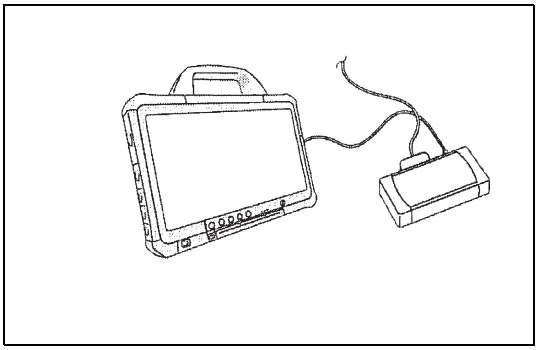

SAPH16F010300570

1. Connect the vehicle to HINO DX II .
2. Set the starter switch to the "ON" position.
3. Select [Engine] and check if any DTC other than P062F (for example, U010C) has been detected.

**Has a DTC other than P062F been detected?**

**YES**

**Go to the diagnostic procedure of a related DTC.**
**After the repair, go to step 2.**

**NO**

**Go to step 3.**

| 2 | Check the DTC detected 2 (Engine ECU) [HINO DX II ] |
|---|---|

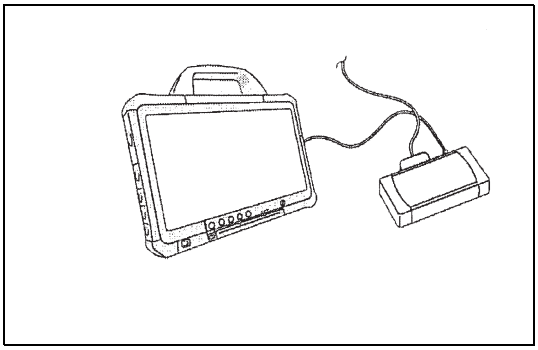

SAPH16F010300571

1. Set the starter switch to the "ON" position.
2. Select [Engine] and check if P062F has been detected.

**Has DTC P062F been detected?**

**YES**

**Go to step 3.**

**NO**

**Procedure completed.**
**Perform "After-inspection work" of INFORMATION section.**

| 3 | Check operation of VNT controller [HINO DX II ] |
|---|---|

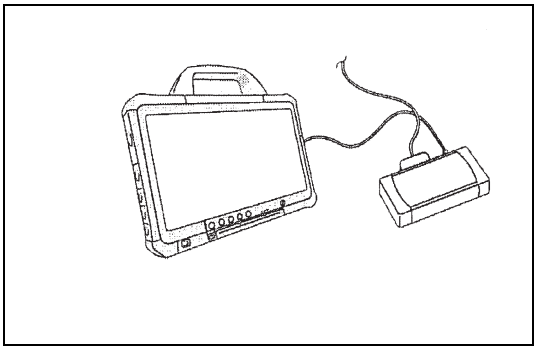

SAPH16F010300572

1. Set the starter switch to the "ON" position.
2. Erase the trouble history using HINO DX II .
3. Set the starter switch to the "LOCK" position.
4. Set the starter switch to the "ON" position again.
5. Select [Engine] and check if P062F has been detected.

**HINT**

**Turn the starter switch OFF and ON verifies the wiping operation of the VNT actuator (DC motor).**

| Measurement conditions |
|---|
| Starter switch: LOCK → ON |

**Has DTC P062F been detected?**

**YES**

**Replace the VNT controller.**
**Perform "After-inspection work" of INFORMATION section.**

**NO**

**Procedure completed.**
**Perform "After-inspection work" of INFORMATION section.**

# DTC: P0630

EN01H16F01030F03001099

## P0630: VIN Not Programmed or Mismatch

INFORMATION

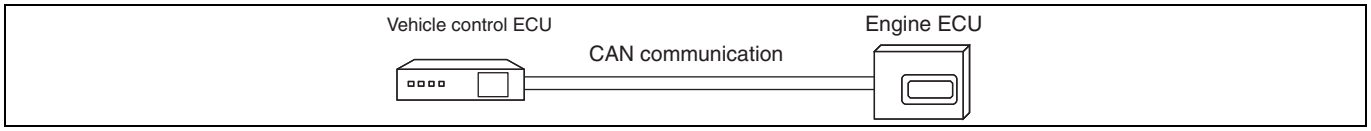


SAPH16F010300573

**1. Technical description**

- Reception of vehicle information (VIN) is detected.

**<Description of malfunction>**

- Vehicle information is not received or may be faulty.

**2. DTC set condition**

(1) DTC detection condition

- Starter switch ON.
- Battery voltage is in the range of 10 V to 16 V.
  Above conditions continue for at least 5 seconds.

(2) Judgment criteria

- Vehicle information is not written.
- Vehicle information was upgraded.
- Vehicle information is not valid (did not use a code)

Above conditions continue for at least 5 seconds.

**3. Reset condition**

- After normal operation is restored and the starter switch is on the "LOCK" position.

**4. Indication, warning or system control regulation when the DTC is set.**

- MIL: OFF
- SVS light: ON

**5. Symptoms on the vehicle when the DTC is set**

**<Symptoms on the vehicle due to backup control (fail safe function)>**

- –

**<Symptoms on the vehicle due to malfunction>**

- –

**6. Pre-inspection work**

- Check that the battery voltage is in the normal range.

**7. After-inspection work**

- Clear all past DTCs.
- Check that no DTC is detected after test drive.

**8. Estimated failure factors**

- Vehicle control ECU failure
- Engine ECU failure
- Vehicle power supply failure (noise)
- CAN circuit failure (noise)

## INSPECTION PROCEDURE: P0630

| 1 | Check the DTC detected (Engine ECU) [HINO DX II ] |
|---|---|

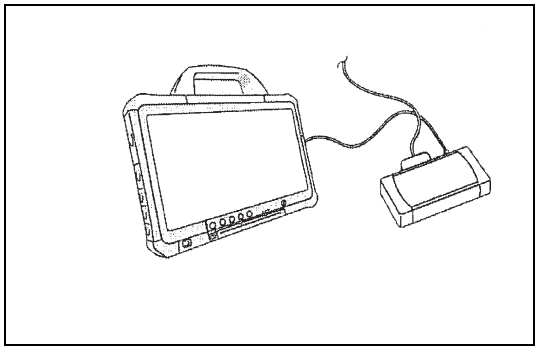

SAPH16F010300574

1. Set the starter switch to the "LOCK" position.
2. Connect the vehicle to HINO DX II .
3. Set the starter switch to the "ON" position.
4. Select [Engine] and check if any DTC other than P0630 (for example U1001, U110A) has been detected.

**Has a DTC other than P0630 detected?**

**YES**

**Go to diagnosis procedure of a related DTC.**

**NO**

**Go to step 2.**

| 2 | Check the vehicle information [HINO DX II ] |
|---|---|

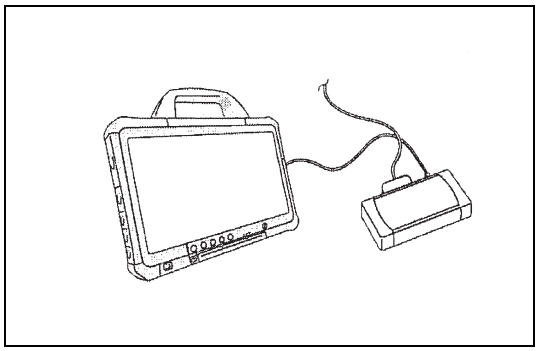

SAPH16F010300575

1. Select [VCS] and read the vehicle information (VIN) written in the Vehicle control ECU.
2. Compare the data with the vehicle's VIN LABEL, and check if the vehicle information (VIN) that has been written to the Vehicle control ECU is correct.

**Is the vehicle Information (VIN) in the vehicle control ECU correct?**

**YES**

**Replace the vehicle control ECU.**
**Perform "After-inspection work" of INFORMATION section.**

**NO**

**Go to step 3.**

| 3 | Check the vehicle control ECU [HINO DX II ] |
|---|---|

1. Check if the vehicle control ECU was previously used in another vehicle.

**Was the vehicle control ECU used in another vehicle?**

**YES**

**Replace the vehicle control ECU.**
**Perform "After-inspection work" of INFORMATION section.**

**NO**

**Go to step 4.**

| 4 | Check the DTC detected (Engine ECU) [HINO DX II ] |
|---|---|

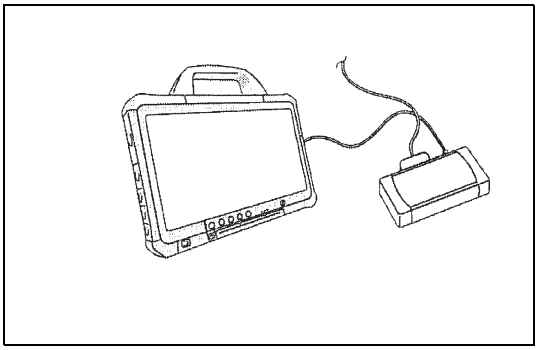

SAPH16F010300576

1. Set the starter switch to the "ON" position.
2. Erase the trouble history and set the starter switch to the "LOCK" position.
3. Set the starter switch to the "ON" position again.
4. Select [Engine] and check if P0630 has been detected.

**Has DTC P0630 been detected?**

**YES**

**Replace the engine ECU.**
**Perform "After-inspection work" of INFORMATION section.**

**NO**

**Procedure completed.**
**Perform "After-inspection work" of INFORMATION section.**

# DTC: P0642

EN01H16F01030F03001100

## P0642: ECU sensor power supply 1 failure (Out of range low)

INFORMATION

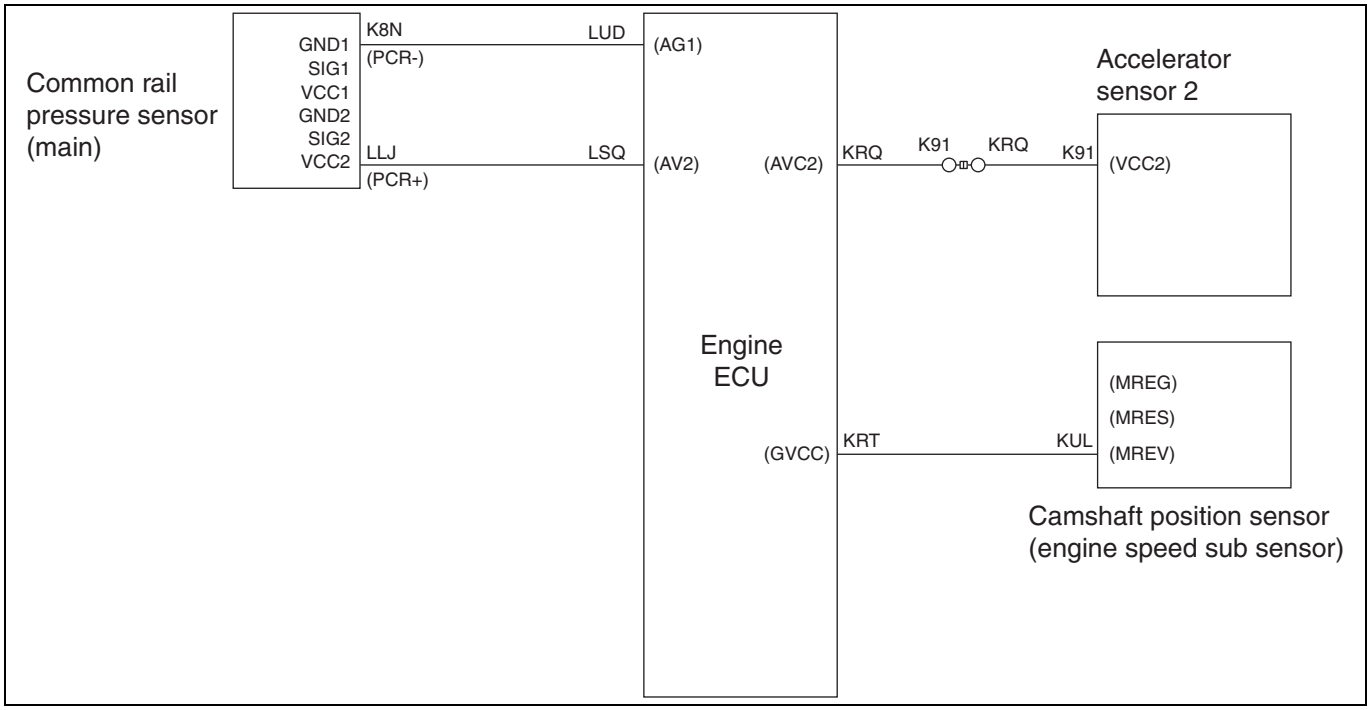


SAPH16F010300577

**1. Technical description**

- Power is supplied to the sensor power supply 1 circuit.
  (Sensor power supply 3, sensor power supply 4, common rail pressure sensor (main), accelerator sensor 2, camshaft position sensor (engine speed sub sensor))

**<Description of malfunction>**

- Low voltage failure of sensor power supply circuit is detected.

**2. DTC set condition**

(1) DTC detection condition

- Starter switch ON.
- Battery voltage is in the range of 10 V to 16 V.

Above conditions continue for at least 5 seconds.

(2) Judgment criteria

- The AC/DC converter input sensor has a power supply voltage no greater than 3.5 V for at least 3 seconds.

**3. Reset condition**

- Immediately after normal operation is restored.

**4. Indication, warning or system control regulation when the DTC is set.**

- MIL: OFF
- SVS light: OFF

**5. Symptoms on the vehicle when the DTC is set**

**<Symptoms on the vehicle due to backup control (fail safe function)>**

- –

**<Symptoms on the vehicle due to malfunction>**

- –

**6. Pre-inspection work**

- Check that the battery voltage is in the normal range.

**7. After-inspection work**

- Clear all past DTCs.
- Check that no DTC is stored after test drive.

**8. Estimated failure factors**

- Faulty harness (GND short-circuit in sensor power supply/GND circuit)
- Failure in engine ECU sensor power supply or internal circuit

## INSPECTION PROCEDURE: P0642

| 1 | Check the DTC detected 1 (Engine ECU) [HINO DX II ] |
|---|---|

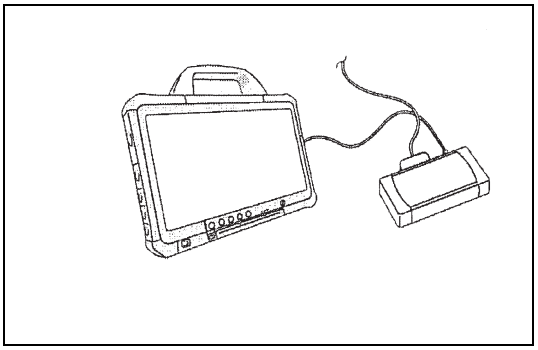

SAPH16F010300578

1. Connect the vehicle to HINO DX II .
2. Erase the trouble history and set the starter switch to the "LOCK" position.
3. Disconnect the common rail pressure sensor (main) connector.
4. Set the starter switch to the "ON" position.
5. Select [Engine] and check if P0642 has been detected.

**Has DTC P0642 been detected?**

**YES**

**Connect the connector, and go to step 2.**

**NO**

**Replace the common rail pressure sensor (main).**
**Perform "After-inspection work" of INFORMATION section.**

| 2 | Check the DTC detected 2 (Engine ECU) [HINO DX II ] |
|---|---|

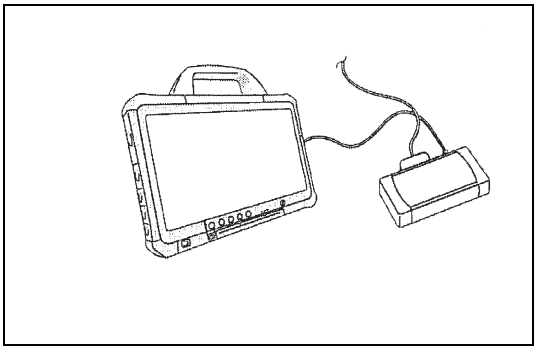

SAPH16F010300579

1. Erase the trouble history and set the starter switch to the "LOCK" position.
2. Disconnect the accelerator sensor 2 connector.
3. Set the starter switch to the "ON" position.
4. Select [Engine] and check if P0642 has been detected.

**Has DTC P0642 been detected?**

**YES**

**Connect the connector, and go to step 3.**

**NO**

**Replace the accelerator sensor 2.**
**Perform "After-inspection work" of INFORMATION section.**

| 3 | Check the DTC detected 3 (Engine ECU) [HINO DX ll ] |
|---|---|

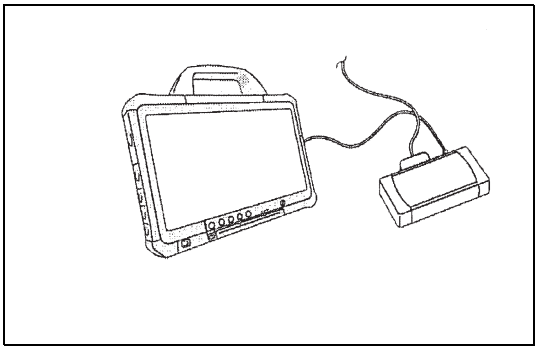

SAPH16F010300580

1. Erase the trouble history and set the starter switch to the "LOCK" position.
2. Disconnect the camshaft position sensor (engine speed sub sensor) connector.
3. Set the starter switch to the "ON" position.
4. Select [Engine] and check if P0642 has been detected.

**Has DTC P0642 been detected?**

**YES**

**Connect the connector, and go to step 4.**

**NO**

**Replace the camshaft position sensor (engine speed sub sensor).**
**Perform "After-inspection work" of INFORMATION section.**

| 4 | Check the wire harness of the sensor power supply |
|---|---|

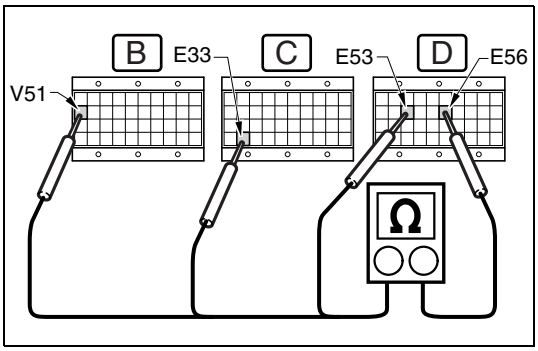


SAPH16F010300581

1. Set the starter switch to the "LOCK" position.
2. Connect the signal check harness to the engine ECU vehicle-side harness. (Do not connect harness to the ECU.)
3. Use the electrical tester to measure the resistance between the terminals of the engine ECU (signal check harness).

| Measurement conditions | Tester connections | Standard values |
|---|---|---|
| **Starter switch: LOCK** | **Engine ECU (signal check harness) AV2(E33) – AG1(E56) GVCC(E53) – AG1(E56) AVC2(V51) – AG1(E56)** | **∞ Ω** |

**Do the measurements meet the standard value?**

**YES**

**Replace the engine ECU.**
**Perform "After-inspection work" of INFORMATION section.**

**NO**

**Repair or replace the harness.**
**Perform "After-inspection work" of INFORMATION section.**

# DTC: P0643

EN01H16F01030F03001101

## P0643: ECU sensor power supply 1 failure (Out of range high)

INFORMATION

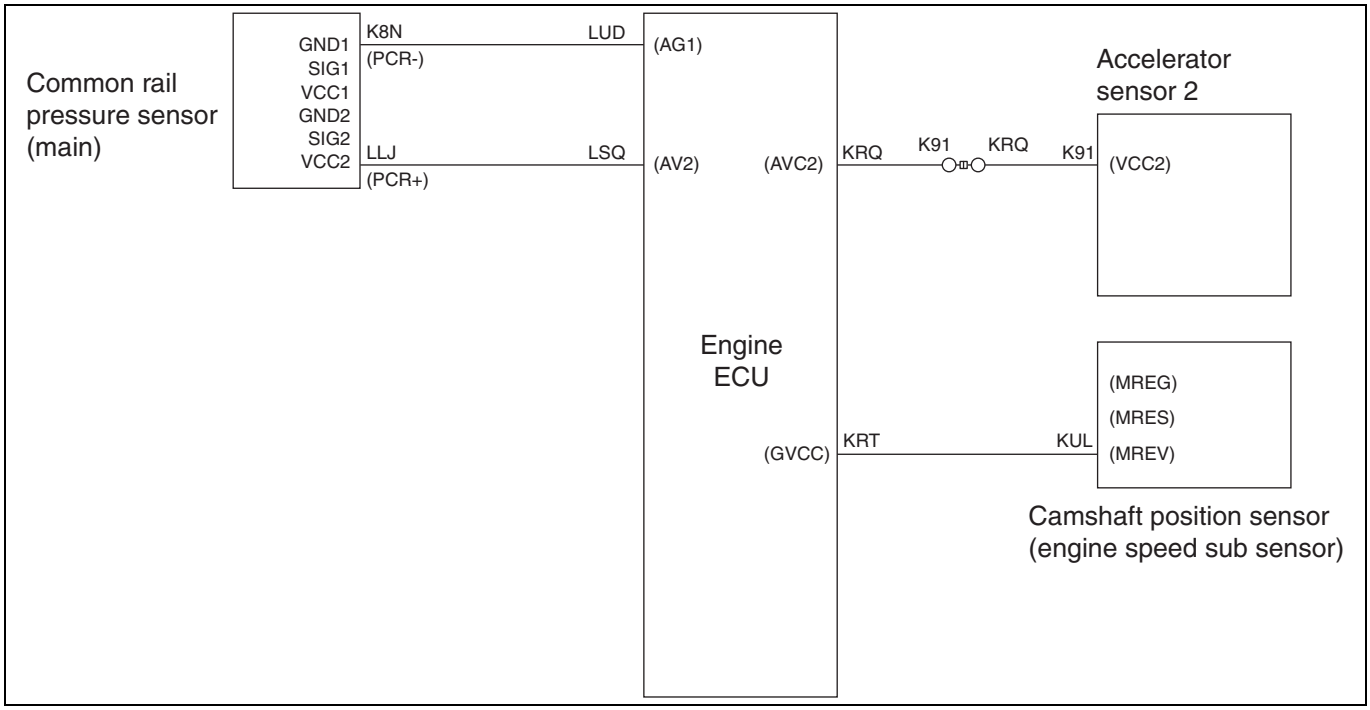


SAPH16F010300582

**1. Technical description**

- Power is supplied to the sensor power supply 1 circuit.
  (Sensor power supply 3, sensor power supply 4, common rail pressure sensor (main), accelerator sensor 2, engine speed sub sensor)

**<Description of malfunction>**

- High voltage failure of sensor power supply circuit is detected.

**2. DTC set condition**

(1) DTC detection condition

- Starter switch ON.
- Battery voltage is in the range of 10 V to 16 V.

Above conditions continue for at least 5 seconds.

(2) Judgment criteria

- The AC/DC converter input sensor has a power supply voltage no greater than 4.5 V for at least 3 seconds.

**3. Reset condition**

- Immediately after normal operation is restored.

**4. Indication, warning or system control regulation when the DTC is set.**

- MIL: OFF
- SVS light: OFF

**5. Symptoms on the vehicle when the DTC is set**

**<Symptoms on the vehicle due to backup control (fail safe function)>**

- –

**<Symptoms on the vehicle due to malfunction>**

- –

**6. Pre-inspection work**

- Check that the battery voltage is in the normal range.

**7. After-inspection work**

- Clear all past DTCs.
- Check that no DTC is stored after test drive.

**8. Estimated failure factors**

- Faulty harness (short-circuit in battery power supply of sensor power supply circuit)
- Failure in engine ECU sensor power supply or internal circuit

## INSPECTION PROCEDURE: P0643

| 1 | Check the power supply of common rail pressure sensor 1 |
|---|---|

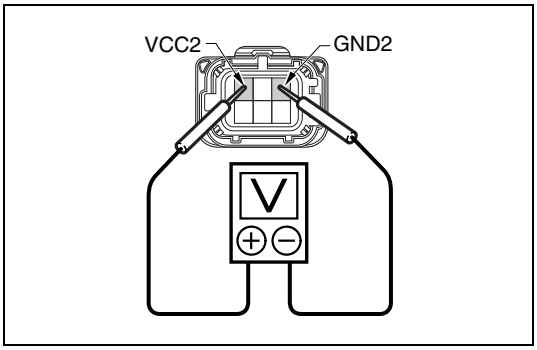

SAPH16F010300583

1. Set the starter switch to the "LOCK" position.
2. Disconnect the common rail pressure sensor 1 connector.
3. Set the starter switch to the "ON" position.
4. Use the electrical tester to measure the voltage between the terminals of the common rail pressure sensor 1 connector.

| Measurement conditions | Tester connections | Standard values |
|---|---|---|
| Starter switch: ON | Common rail pressure sensor 1 vehicle-side connector VCC2 – GND2 | 4.5 – 5.5 V |

**Do the measurements meet the standard value?**

**YES**

**Go to step 2.**

**NO**

**Repair or replace the harness.**
**Perform "After-inspection work" of INFORMATION section.**

| 2 | Check the power supply of accelerator sensor 2 |
|---|---|

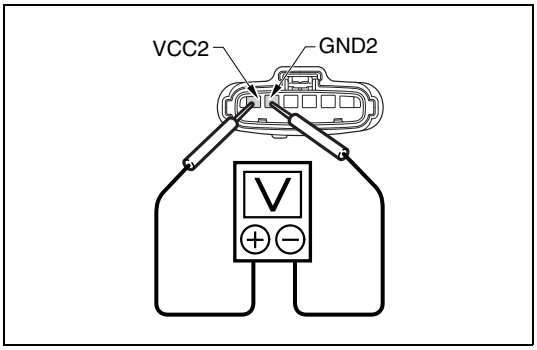

SAPH16F010300584

1. Set the starter switch to the "LOCK" position.
2. Disconnect the accelerator sensor 2 connector.
3. Set the starter switch to the "ON" position.
4. Use the electrical tester to measure the voltage between the terminals of the accelerator sensor 2 connector.

| Measurement conditions | Tester connections | Standard values |
|---|---|---|
| Starter switch: ON | Accelerator sensor 2 vehicle-side connector VCC2 – GND2 | 4.5 – 5.5 V |

**Do the measurements meet the standard value?**

**YES**

**Go to step 3.**

**NO**

**Repair or replace the harness.**
**Perform "After-inspection work" of INFORMATION section.**

| 3 | Check the power supply of camshaft position sensor (engine speed sub sensor) |
|---|---|

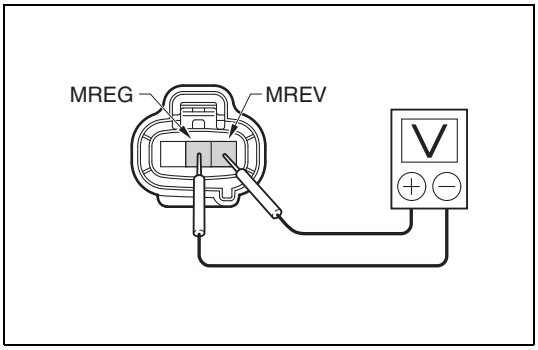


SAPH16F010300585

1. Set the starter switch to the "LOCK" position.
2. Disconnect the camshaft position sensor (engine speed sub sensor) connector.
3. Set the starter switch to the "ON" position.
4. Use the electrical tester to measure the voltage between the terminals of the camshaft position sensor (engine speed sub sensor) connector.

| Measurement conditions | Tester connections | Standard values |
|---|---|---|
| Starter switch: ON | Camshaft position sensor (engine speed sub sensor) vehicle-side connector MREV – MREG | 4.5 – 5.5 V |

**Do the measurements meet the standard value?**

**YES**

**Go to step 4.**

**NO**

**Repair or replace the harness.**
**Perform "After-inspection work" of INFORMATION section.**

| 4 | Check the power supply of all sensors |
|---|---|

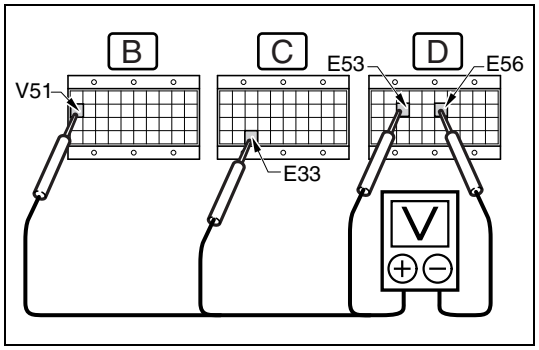


SAPH16F010300586

1. Set the starter switch to the "LOCK" position.
2. Connect the signal check harness to the engine ECU.
3. Set the starter switch to the "ON" position.
4. Use the electrical tester to measure the resistance between the terminals of the engine ECU (signal check harness).

| Measurement conditions | Tester connections | Standard values |
|---|---|---|
| **Starter switch: ON** | **Engine ECU (signal check harness) (+) – (-)**<br>**AV2(E33) – AG1(E56)**<br>**GVCC(E53) – AG1(E56)**<br>**AVC2(V51) – AG1(E56)** | **4.9 – 5.1 V** |

**Do the measurements meet the standard value?**

**YES**

**Replace the engine ECU.**
**Perform "After-inspection work" of INFORMATION section.**

**NO**

**Repair or replace the harness.**
**Perform "After-inspection work" of INFORMATION section.**

# DTC: P064C

EN01H16F01030F03001102

## P064C: Glow controller - Battery for glow plug open, GND short Glow controller - Over temperature

INFORMATION

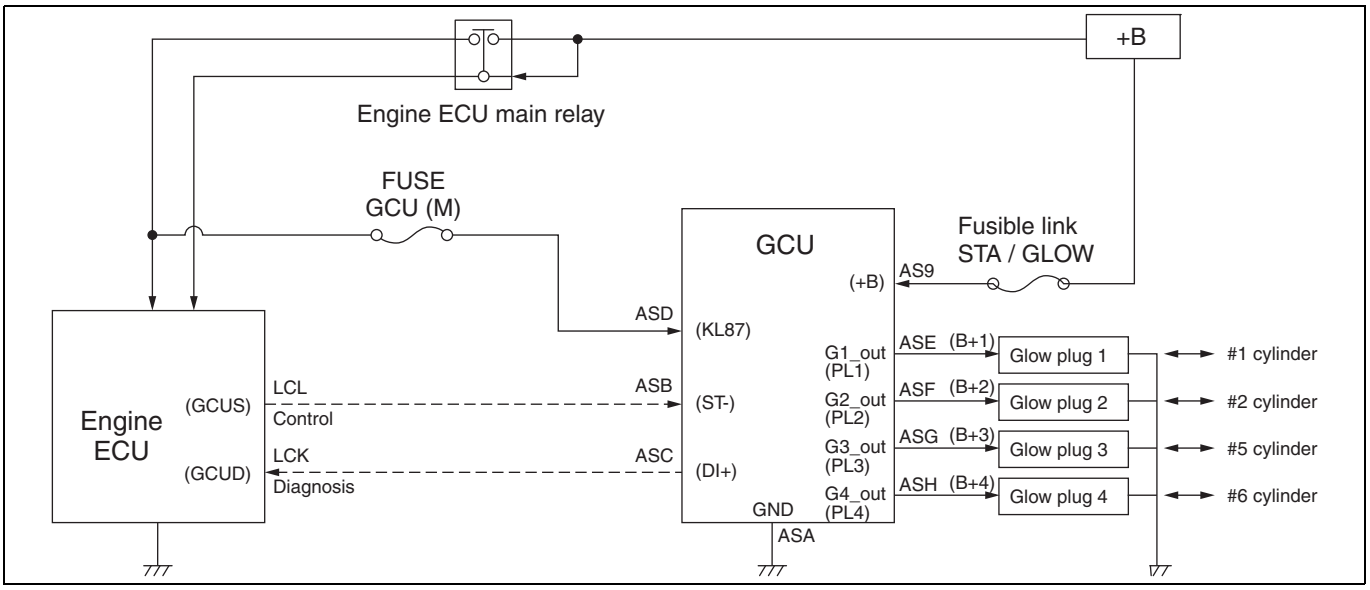


SAPH16F010300587

**1. Technical description**

- Controlled by GCU.
- The indicator in the meter lights up when a failure (malfunction caused by short-circuit or disconnection) occurs in the glow system.

**<Description of malfunction>**

- A disconnection or short-circuit has occurred in the GCU internal circuit.

**2. DTC set condition**

(1) DTC detection condition

- Starter switch ON.
- Battery voltage is in the range of 10 V to 16 V.
- Glow discharge instruction status

(2) Judgment criteria

- Failure determination time ≥ 4 seconds

**Any of the following conditions is present:**

- Voltage difference:
  |k30-k87| ≤ 1[v] (for 6[v] < {k30, k87})
  |k30-k87| ≤ 2[v] (for 8[v] < {k30, k87})
- Over temperature: 120 - 150 [ °C] (shutdown by soft)
  185 - 215 [ °C] (meltdown by hard)
- Glow controller diagnosis signal: 0x01 (open, GND short-circuit, shutdown) 0x03 (meltdown)

**3. Reset condition**

- Immediately after normal operation is restored.

**4. Indication, warning or system control regulation when the DTC is set.**

- MIL: ON
- SVS light: OFF

**5. Symptoms on the vehicle when the DTC is set**

**<Symptoms on the vehicle due to backup control (fail safe function)>**

- –

**<Symptoms on the vehicle due to malfunction>**

- Vehicle is difficult to start.

**6. Pre-inspection work**

- Check that the battery voltage is in the normal range.

**7. After-inspection work**

- Clear all past DTCs.
- Check that no DTC is stored after test drive.

**8. Estimated failure factors**

- Blown fuse, faulty connection, or partial mating
- Harness disconnection or short-circuit
- Abnormal ground potential difference between engine ECU and GCU
- GCU failure

## INSPECTION PROCEDURE: P064C

| 1 | Inspect the fuse (GCU (M)), fusible link (STA/GLOW) |
|---|---|

1. Check if the fuse (GCU (M)) and fusible link (STA/GLOW) are blown and if they are properly installed.

**Was any failure found?**

**YES**

**Replace or correctly connect the fuse and fusible link.**
**Perform "After-inspection work" of INFORMATION section.**

**NO**

**Go to step 2.**

| 2 | Inspect the ground circuit of the glow control unit |
|---|---|

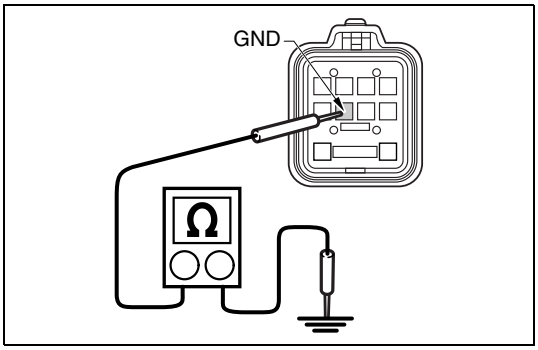

SAPH16F010300588

1. Set the starter switch to the "LOCK" position.
2. Disconnect the GCU connector.
3. Use the electrical tester to measure the resistance between the glow control unit GND terminal and ground.

| Measurement conditions | Tester connections | Standard values |
|---|---|---|
| Starter switch: LOCK | GCU vehicle-side connector GND – Ground | Less than 1 Ω |

**Do the measurements meet the standard value?**

**YES**

**Go to step 3.**

**NO**

**Inspect the GCU ground circuit.**
**Perform "After-inspection work" of INFORMATION section.**

## 3 Inspect the glow control unit power supply circuit

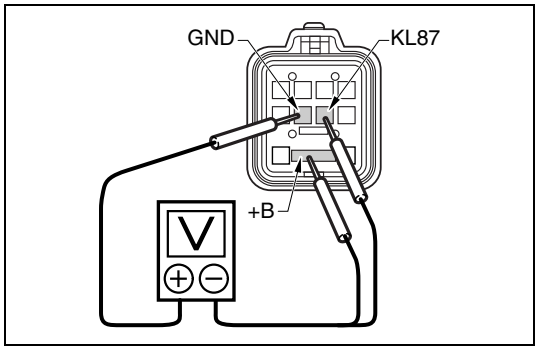


SAPH16F010300589

1. Set the starter switch to the "ON" position.
2. Use the electrical tester to measure the voltage between the terminals of the GCU vehicle-side connector.

| Measurement conditions | Tester connections | Standard values |
|---|---|---|
| Starter switch: ON | GCU vehicle-side connector<br>+B – GND<br>KL87 – GND | 10 – 16 V |

**Do the measurements meet the standard value?**

**YES**

**Go to step 4.**

**NO**

**Inspect the GCU ground circuit.**
**Perform "After-inspection work" of INFORMATION section.**

## 4 Inspect the GCU harness

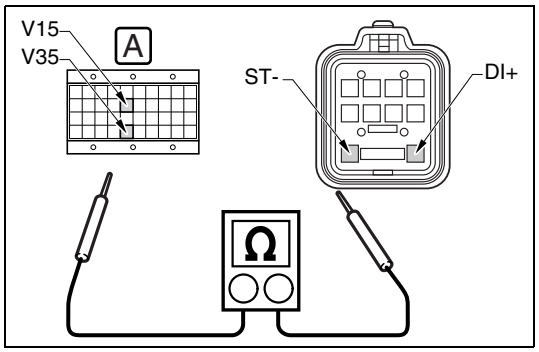


SAPH16F010300590

1. Set the starter switch to the "LOCK" position.
2. Connect the signal check harness to the engine ECU vehicle-side harness. (Do not connect the harness to the ECU.)
3. Use the electrical tester to measure the resistance between the terminals of the GCU vehicle-side connector and engine ECU.

| Measurement conditions | Tester connections | Standard values |
|---|---|---|
| Starter switch: LOCK | GCU vehicle-side connector – Engine ECU (signal check harness)<br>DI+ – GCUD(V35)<br>ST- – GCUS(V15) | Less than 1 Ω |

**Do the measurements meet the standard value?**

**YES**

**Go to step 5.**

**NO**

**Repair or replace the harness.**
**Perform "After-inspection work" of INFORMATION section.**

| 5 | Inspect the ground circuit voltage |
|---|---|

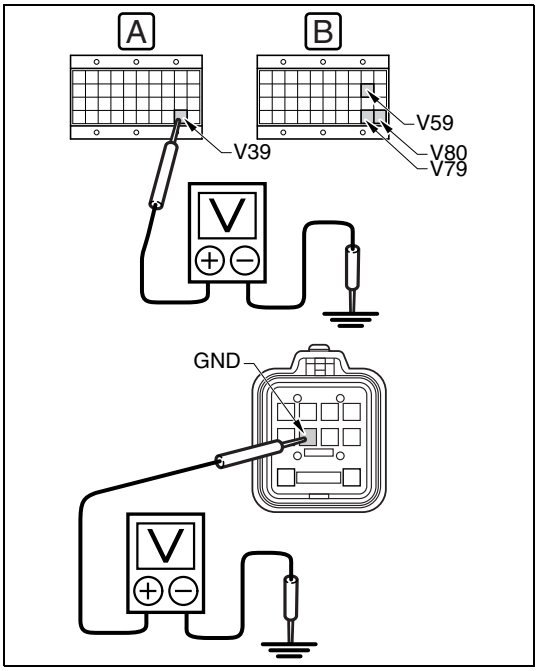


SAPH16F010300591

1. Set the starter switch to the "ON" position.
2. Use the electrical tester to measure the voltage between each terminal in the engine ECU (signal check harness) and ground.
3. Measure the voltage between the GND terminal in the glow control unit vehicle-side connector and ground.
4. Check the difference in potential between the engine ECU and the ground circuit of the glow control unit.

| Measurement conditions | Tester connections | Standard values |
|---|---|---|
| **Starter switch: ON** | **Engine ECU (signal check harness) PGD1(V39) – Ground<br>PGD2(V59) – Ground<br>PGD3(V79) – Ground<br>PGD4(V80) – Ground<br>GCU vehicle-side connector GND – Ground** | **Potential difference: within 400 mV** |

**Do the measurements meet the standard value?**

**YES**

**Replace the GCU.**
**Perform "After-inspection work" of INFORMATION section.**

**NO**

**Inspect the ground circuit.**
**Perform "After-inspection work" of INFORMATION section.**

# DTC: P0652

EN01H16F01030F03001103

## P0652: ECU sensor power supply 2 failure (Out of range low)

INFORMATION

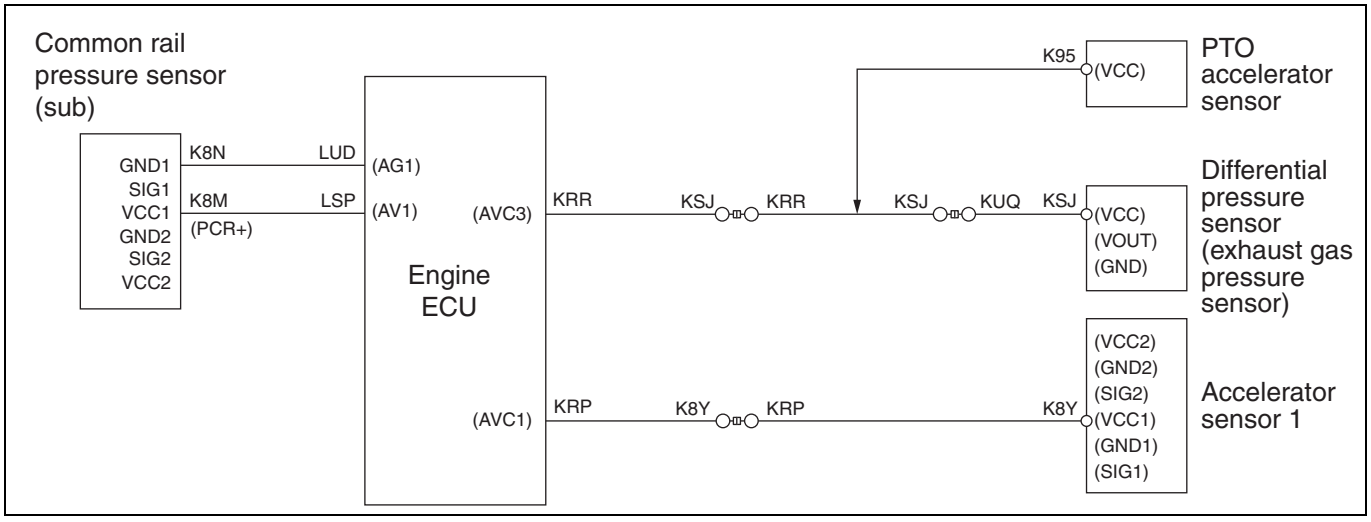


SAPH16F010300592

**1. Technical description**

- Power is supplied to the sensor supply 2 circuit.
  (Accelerator sensor1, common rail pressure sensor (sub), PTO accelerator sensor, differential pressure sensor (exhaust gas pressure sensor ))

**<Description of malfunction>**

- Excessively low voltage has been detected in the sensor power supply.

**2. DTC set condition**

(1) DTC detection condition

- Starter switch ON.
- Battery voltage is in the range of 10 V to 16 V.

Above conditions continue for at least 5 seconds.

(2) Judgment criteria

- The AC/DC converter input sensor has a power supply voltage no greater than 3.5 V for at least 3 seconds.

**3. Reset condition**

- Immediately after normal operation is restored.

**4. Indication, warning or system control regulation when the DTC is set.**

- MIL: OFF
- SVS light: OFF

**5. Symptoms on the vehicle when the DTC is set**

**<Symptoms on the vehicle due to backup control (fail safe function)>**

- –

**<Symptoms on the vehicle due to malfunction>**

- –

**6. Pre-inspection work**

- Check that the battery voltage is in the normal range.

**7. After-inspection work**

- Clear all past DTCs.
- Check that no DTC is stored after test drive.

**8. Estimated failure factors**

- Individual sensors and harnesses (sensor power supply circuit GND short-circuit)
- Failure in engine ECU sensor power supply or internal circuit

## INSPECTION PROCEDURE: P0652

| 1 | Check the DTC detected 1 (Engine ECU) [HINO DX II ] |
|---|---|

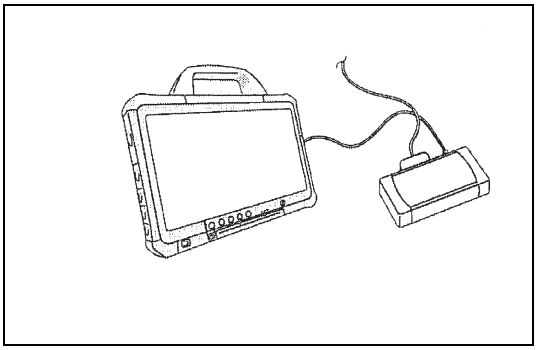

SAPH16F010300593

1. Connect the vehicle to HINO DX II .
2. Erase the trouble history and set the starter switch to the "LOCK" position.
3. Disconnect the common rail pressure sensor (sub) connector.
4. Set the starter switch to the "ON" position.
5. Select [Engine] and check if P0652 has been detected.

**Has DTC P0652 been detected?**

**YES**

**After connecting the connector, go to step 2.**

**NO**

**Replace the common rail pressure sensor (sub).**
**Perform "After-inspection work" of INFORMATION section.**

| 2 | Check the DTC detected 2 (Engine ECU) [HINO DX II ] |
|---|---|

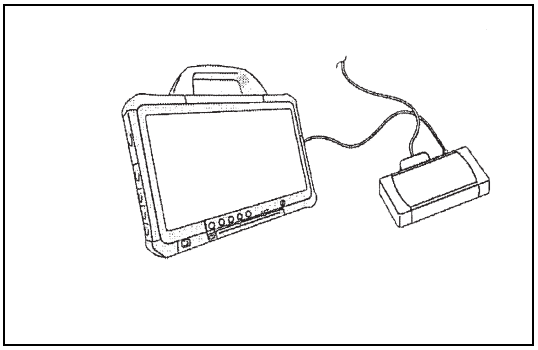

SAPH16F010300594

1. Erase the trouble history and set the starter switch to the "LOCK" position.
2. Disconnect the accelerator sensor 1 connector.
3. Set the starter switch to the "ON" position.
4. Select [Engine] and check if P0652 has been detected.

**Has DTC P0652 been detected?**

**YES**

**After connecting the connector, go to step 3.**

**NO**

**Replace the accelerator sensor 1.**
**Perform "After-inspection work" of INFORMATION section.**

| 3 | Check the DTC detected 3 (Engine ECU) [HINO DX II ] |
|---|---|

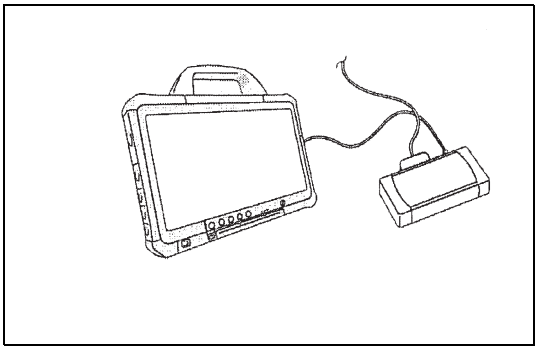

SAPH16F010300595

1. Erase the trouble history and set the starter switch to the "LOCK" position.
2. Disconnect the differential pressure sensor connector.
3. Set the starter switch to the "ON" position.
4. Select [Engine] and check if P0652 has been detected.

**Has DTC P0652 been detected?**

**YES**

**After connecting the connector, go to step 4.**

**NO**

**Replace the differential pressure sensor. Perform "After-inspection work" of INFORMATION section.**

| 4 | Check the DTC detected 4 (Engine ECU) [HINO DX II ] |
|---|---|

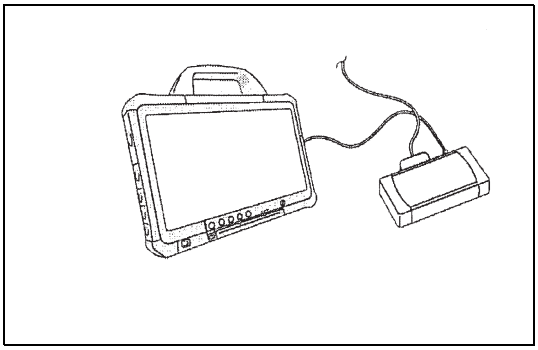

SAPH16F010300596

1. Erase the trouble history and set the starter switch to the "LOCK" position.
2. Disconnect the PTO accelerator sensor connector.
3. Set the starter switch to the "ON" position.
4. Select [Engine] and check if P0652 has been detected.

**Has DTC P0652 been detected?**

**YES**

**After connecting the connector, go to step 5.**

**NO**

**Replace the PTO accelerator sensor. Perform "After-inspection work" of INFORMATION section.**

| 5 | Inspect the wire harness of the sensor power supply |
|---|---|

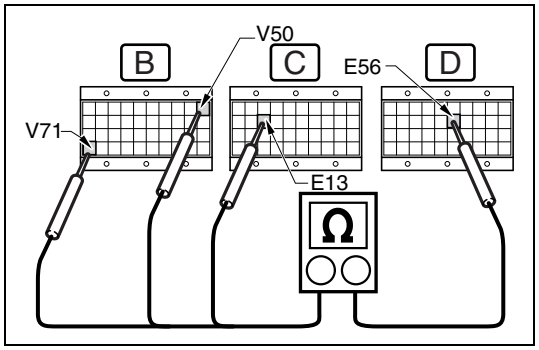


SAPH16F010300597

1. Set the starter switch to the "LOCK" position.
2. Connect the signal check harness to the engine ECU vehicle-side harness. (Do not connect the harness to the ECU.)
3. Use the electrical tester to measure the resistance between the terminals of the engine ECU (signal check harness).

| Measurement conditions | Tester connections | Standard values |
|---|---|---|
| **Starter switch: LOCK** | **Engine ECU (signal check harness) AV1(E13) – AG1(E56) AVC1(V50) – AG1(E56) AVC3(V71) – AG1(E56)** | ∞ Ω |

**Do the measurements meet the standard value?**

**YES**

**Replace the engine ECU.**
**Perform "After-inspection work" of INFORMATION section.**

**NO**

**Repair or replace the harness.**
**Perform "After-inspection work" of INFORMATION section.**

# DTC: P0653

EN01H16F01030F03001104

## P0653: ECU sensor power supply 2 failure (Out of range high)

INFORMATION

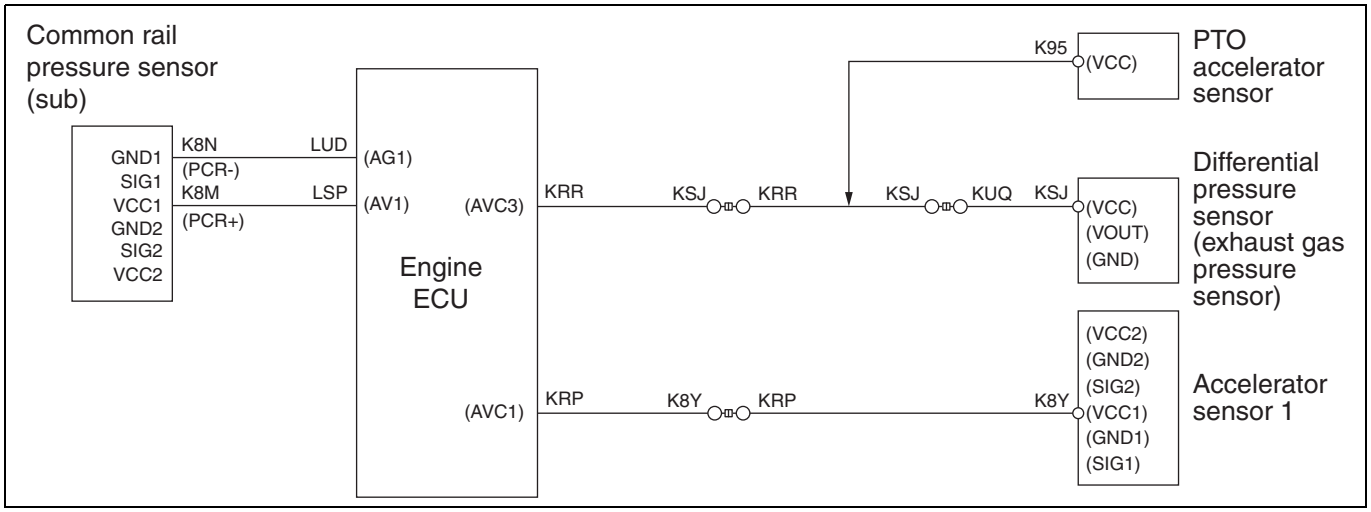


SAPH16F010300598

**1. Technical description**

- Power is supplied to the sensor supply 2 circuit.
  (Accelerator sensor 1, common rail pressure sensor (sub), PTO accelerator sensor, DPR differential pressure sensor)

**<Description of malfunction>**

- Excessively high voltage has been detected in the sensor power supply.

**2. DTC set condition**

(1) DTC detection condition

- Starter switch ON.
- Battery voltage is in the range of 10 V to 16 V.

Above conditions continue for at least 5 seconds.

(2) Judgment criteria

- 3.5 V or higher voltage remains at the A/D converter for 3.5 seconds or longer.

**3. Reset condition**

- Immediately after normal operation is restored.

**4. Indication, warning or system control regulation when the DTC is set.**

- MIL: OFF
- SVS light: OFF

**5. Symptoms on the vehicle when the DTC is set**

**<Symptoms on the vehicle due to backup control (fail safe function)>**

- –

**<Symptoms on the vehicle due to malfunction>**

- –

**6. Pre-inspection work**

- Check that the battery voltage is in the normal range.

**7. After-inspection work**

- Clear all past DTCs.
- Check that no DTC is stored after test drive.

**8. Estimated failure factors**

- Faulty harness (battery power supply short-circuit)
- Failure in engine ECU sensor power supply or internal circuit

## INSPECTION PROCEDURE: P0653

| 1 | Inspect the power supply of common rail pressure sensor 2 |
|---|---|

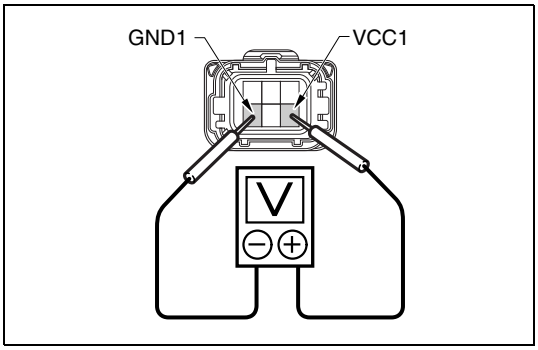

SAPH16F010300599

1. Set the starter switch to the "LOCK" position.
2. Disconnect the common rail pressure sensor 2 connector.
3. Set the starter switch to the "ON" position.
4. Use the electrical tester to measure the voltage between the terminals of the common rail pressure sensor 2 vehicle-side connector.

| Measurement conditions | Tester connections | Standard values |
|---|---|---|
| Starter switch: ON | Common rail pressure sensor 2 vehicle-side connector<br>VCC1 – GND1 | 4.5 – 5.5 V |

**Do the measurements meet the standard value?**

**YES**

**Go to step 2.**

**NO**

**Repair or replace the harness.**
**Perform "After-inspection work" of INFORMATION section.**

| 2 | Inspect the power supply of accelerator sensor 1 |
|---|---|

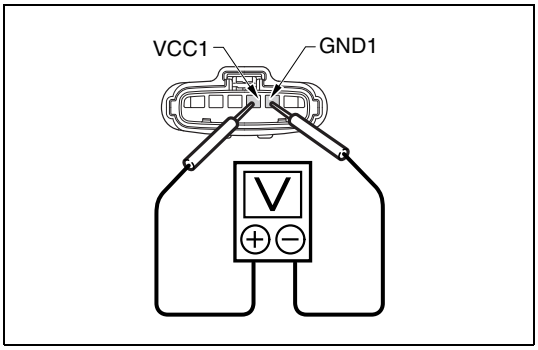

SAPH16F010300600

1. Set the starter switch to the "LOCK" position.
2. Disconnect the accelerator sensor 1 connector.
3. Set the starter switch to the "ON" position.
4. Use the electrical tester to measure the voltage between the terminals of the accelerator sensor 1 vehicle-side connector.

| Measurement conditions | Tester connections | Standard values |
|---|---|---|
| Starter switch: ON | Accelerator sensor 1 vehicle-side connector<br>VCC1 – GND1 | 4.5 – 5.5 V |

**Do the measurements meet the standard value?**

YES

**Go to step 3.**

NO

**Repair or replace the harness.**
**Perform "After-inspection work" of INFORMATION section.**

## 3 Inspect the power supply of DPR differential pressure sensor

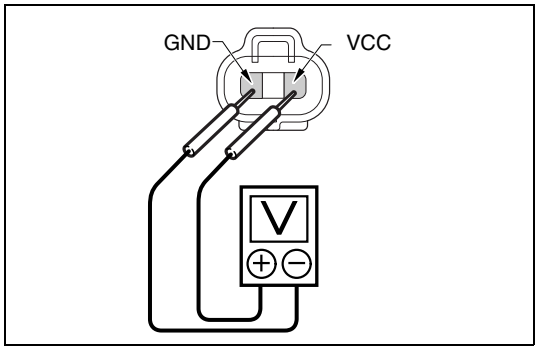


SAPH16F010300601

1. Set the starter switch to the "LOCK" position.
2. Disconnect the DPR differential pressure sensor connector.
3. Set the starter switch to the "ON" position.
4. Use the electrical tester to measure the voltage between the DPR differential pressure sensor terminals.

| Measurement conditions | Tester connections | Standard values |
|---|---|---|
| Starter switch: ON | DPR differential pressure sensor VCC – GND | 4.5 – 5.5 V |

**Do the measurements meet the standard value?**

YES

**Go to step 4.**

NO

**Repair or replace the harness.**
**Perform "After-inspection work" of INFORMATION section.**

## 4 Inspect the power supply of the PTO accelerator sensor

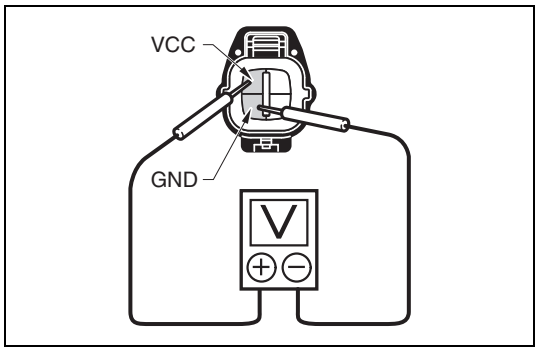


SAPH16F010300602

1. Set the starter switch to the "LOCK" position.
2. Disconnect the PTO accelerator sensor connector.
3. Set the starter switch to the "ON" position.
4. Use the electrical tester to measure the voltage between the terminals of the PTO accelerator sensor vehicle-side connector.

| Measurement conditions | Tester connections | Standard values |
|---|---|---|
| Starter switch: ON | PTO accelerator sensor vehicle-side connector VCC – GND | 4.5 – 5.5 V |

**Do the measurements meet the standard value?**

| YES | NO |
|---|---|
| **Go to step 5.** | **Repair or replace the harness. Perform "After-inspection work" of INFORMATION section.** |

## 5 Inspect the power supply of all sensors

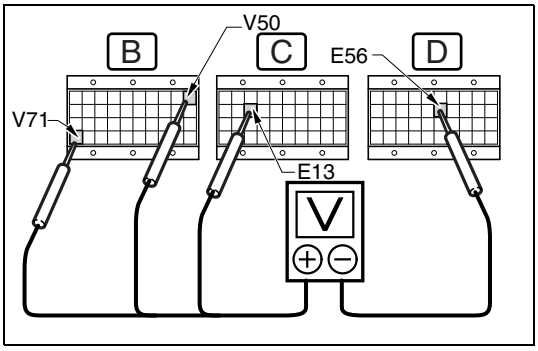


SAPH16F010300603

1. Set the starter switch to the "LOCK" position.
2. Connect the signal check harness to the engine ECU.
3. Set the starter switch to the "ON" position.
4. Use the electrical tester to measure the resistance between the terminals of the engine ECU (signal check harness).

| Measurement conditions | Tester connections | Standard values |
|---|---|---|
| **Starter switch: ON** | **Engine ECU (signal check harness) (+) – (-) AV1(E13) – AG1(E56) AVC1(V50) – AG1(E56) AVC3(V71) – AG1(E56)** | **4.9 – 5.1 V** |

**Do the measurements meet the standard value?**

| YES | NO |
|---|---|
| **Replace the engine ECU. Perform "After-inspection work" of INFORMATION section.** | **Repair or replace the harness. Perform "After-inspection work" of INFORMATION section.** |

# DTC: P0671, P0672, P0675 and P0676

EN01H16F01030F03001105

## P0671: Glow plug (Circuit low) (#1cyl), Glow plug (Circuit high) (#1cyl)

INFORMATION

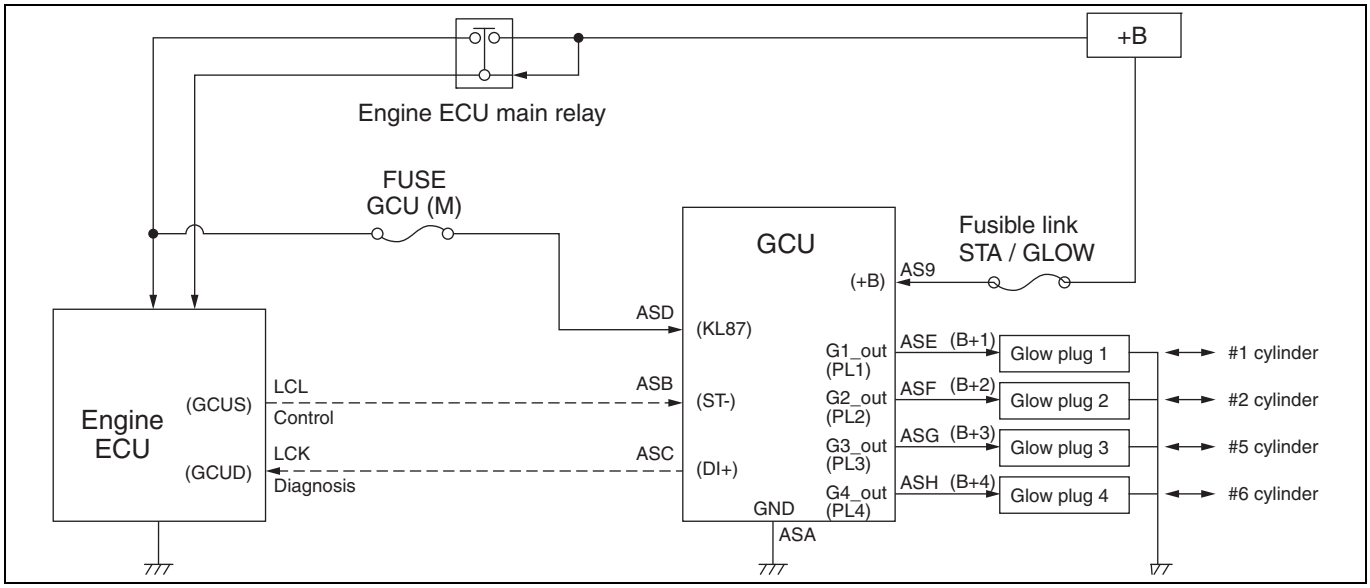


SAPH16F010300604

**1. Technical description**

- The glow plug is controlled by GCU (Glow Control Unit).
- The indicator in the meter lights up when a failure (malfunction caused by short-circuit or disconnection) occurs in the glow system.

**<Description of malfunction>**

- Circuit failure between the GCU and glow plug #1 is detected.

**2. DTC set condition**

(1) DTC detection condition

- Starter switch ON.
- Battery voltage is in the range of 10 V to 16 V.
- With glow discharge instructions in effect

(2) Judgment criteria

- Glow plug drive current < 0.5 -1.9 A, or Glow plug drive current > 21-36 A
- Failure determination time ≥ 4 sec.
- GCU diagnostic signal: 0x80 (open) 0x82 (GND short-circuit)

**3. Reset condition**

- Immediately after normal operation is restored.

**4. Indication, warning or system control regulation when the DTC is set.**

- MIL: ON
- SVS light: OFF

**5. Symptoms on the vehicle when the DTC is set**

**<Symptoms on the vehicle due to backup control (fail safe function)>**

- –

**<Symptoms on the vehicle due to malfunction>**

- Engine is difficult to start.

**6. Pre-inspection work**

- Check that the battery voltage is in the normal range.

**7. After-inspection work**

- Clear all past DTCs.
- Check that no DTC is stored after test drive.

**8. Estimated failure factors**

- Harness disconnection or short-circuit between GCU and glow plug #1
- Glow plug #1 unit is faulty.

## P0672: Glow plug (Circuit low) (#2cyl), Glow plug (Circuit high) (#2cyl)

INFORMATION

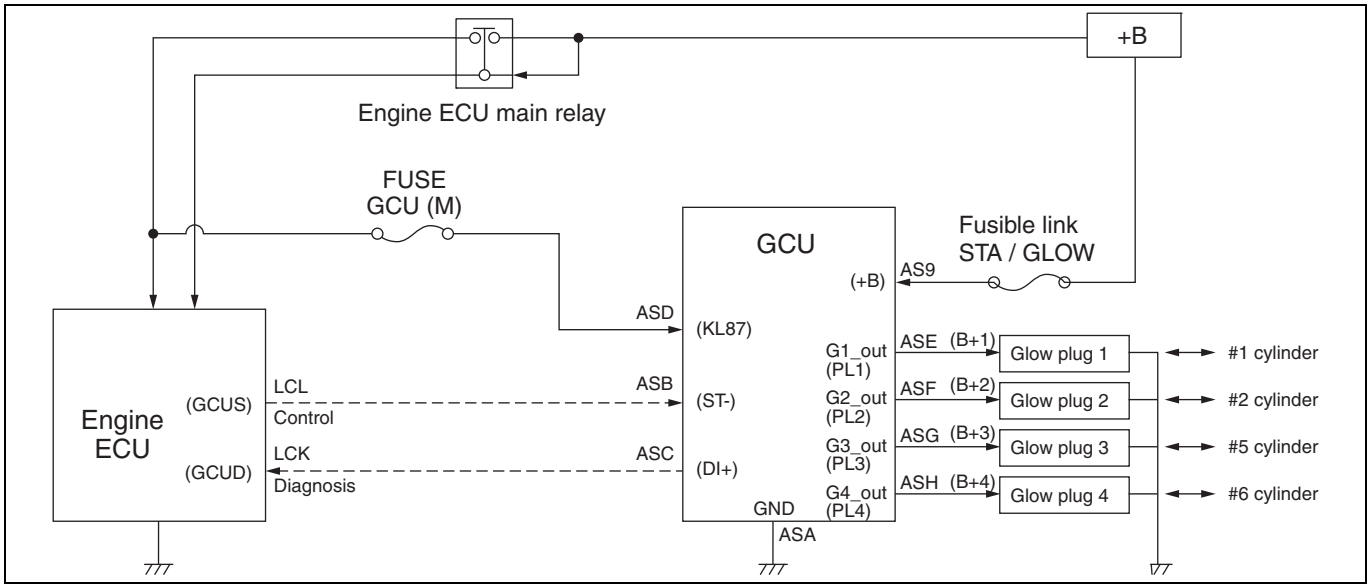


SAPH16F010300605

**1. Technical description**

- The glow plug is controlled by GCU (Glow Control Unit).
- The indicator in the meter lights up when a failure (malfunction caused by short-circuit or disconnection) occurs in the glow system.

**<Description of malfunction>**

- Circuit failure between the GCU and glow plug #2 is detected.

**2. DTC set condition**

(1) DTC detection condition

- Starter switch ON.
- Battery voltage is in the range of 10 V to 16 V.
- With glow discharge instructions in effect

(2) Judgment criteria

- Glow plug drive current < 0.5 -1.9 A, or Glow plug drive current > 21-36 A
- Failure determination time ≥ 4 sec.
- GCU diagnostic signal: 0x40 (open) 0x42 (GND short-circuit)

**3. Reset condition**

- Immediately after normal operation is restored.

**4. Indication, warning or system control regulation when the DTC is set.**

- MIL: ON
- SVS light: OFF

**5. Symptoms on the vehicle when the DTC is set**

**<Symptoms on the vehicle due to backup control (fail safe function)>**

- –

**<Symptoms on the vehicle due to malfunction>**

- Engine is difficult to start.

**6. Pre-inspection work**

- Check that the battery voltage is in the normal range.

**7. After-inspection work**

- Clear all past DTCs.
- Check that no DTC is stored after test drive.

**8. Estimated failure factors**

- Harness disconnection or short-circuit between GCU and glow plug #2
- Glow plug #2 unit is faulty.

## P0675: Glow plug (Circuit low) (#5cyl), Glow plug (Circuit high) (#5cyl)

INFORMATION

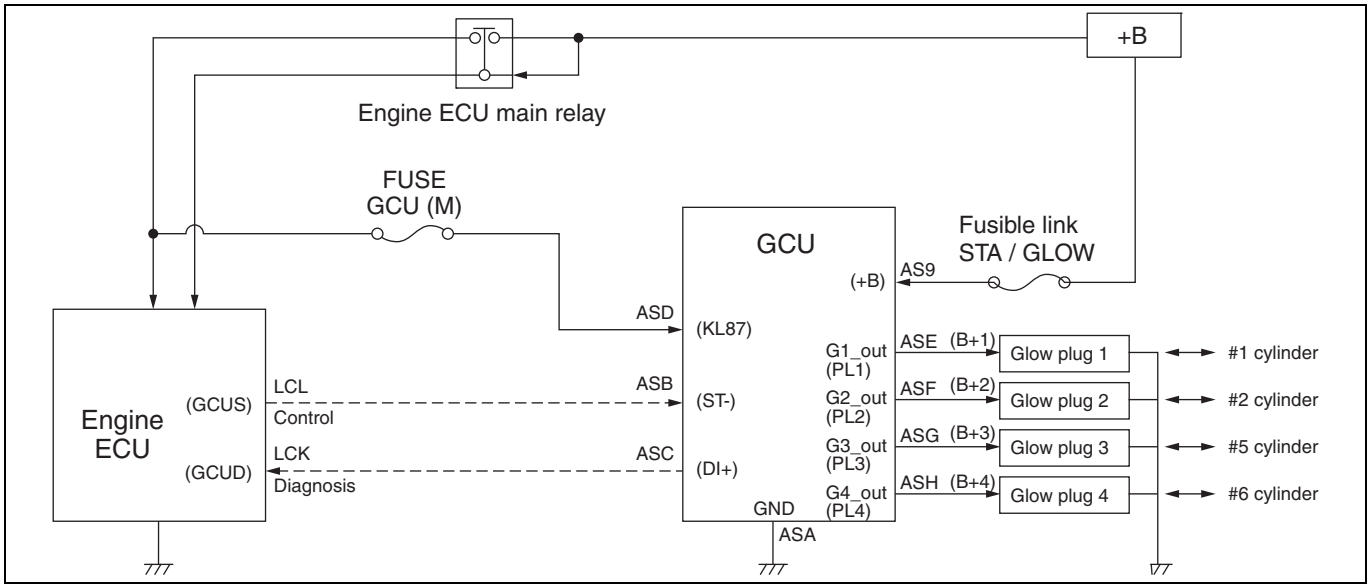


SAPH16F010300606

**1. Technical description**

- The glow plug is controlled by GCU (Glow Control Unit).
- The indicator in the meter lights up when a failure (malfunction caused by short-circuit or disconnection) occurs in the glow system.

**<Description of malfunction>**

- Circuit failure between the GCU and glow plug #5 is detected.

**2. DTC set condition**

(1) DTC detection condition

- Starter switch ON.
- Battery voltage is in the range of 10 V to 16 V.
- With glow discharge instructions in effect

(2) Judgment criteria

- Glow plug drive current < 0.5 -1.9 A, or Glow plug drive current > 21-36 A
- Failure determination time ≥ 4 sec.
- GCU diagnostic signal: 0x20 (open) 0x22 (GND short-circuit)

**3. Reset condition**

- Immediately after normal operation is restored.

**4. Indication, warning or system control regulation when the DTC is set.**

- MIL: ON
- SVS light: OFF

**5. Symptoms on the vehicle when the DTC is set**

**<Symptoms on the vehicle due to backup control (fail safe function)>**

- –

**<Symptoms on the vehicle due to malfunction>**

- Engine is difficult to start.

**6. Pre-inspection work**

- Check that the battery voltage is in the normal range.

**7. After-inspection work**

- Clear all past DTCs.
- Check that no DTC is stored after test drive.

**8. Estimated failure factors**

- Harness disconnection or short-circuit between GCU and glow plug #5
- Glow plug #5 unit is faulty.

## P0676: Glow plug (Circuit low) (#6cyl), Glow plug (Circuit high) (#6cyl)

INFORMATION

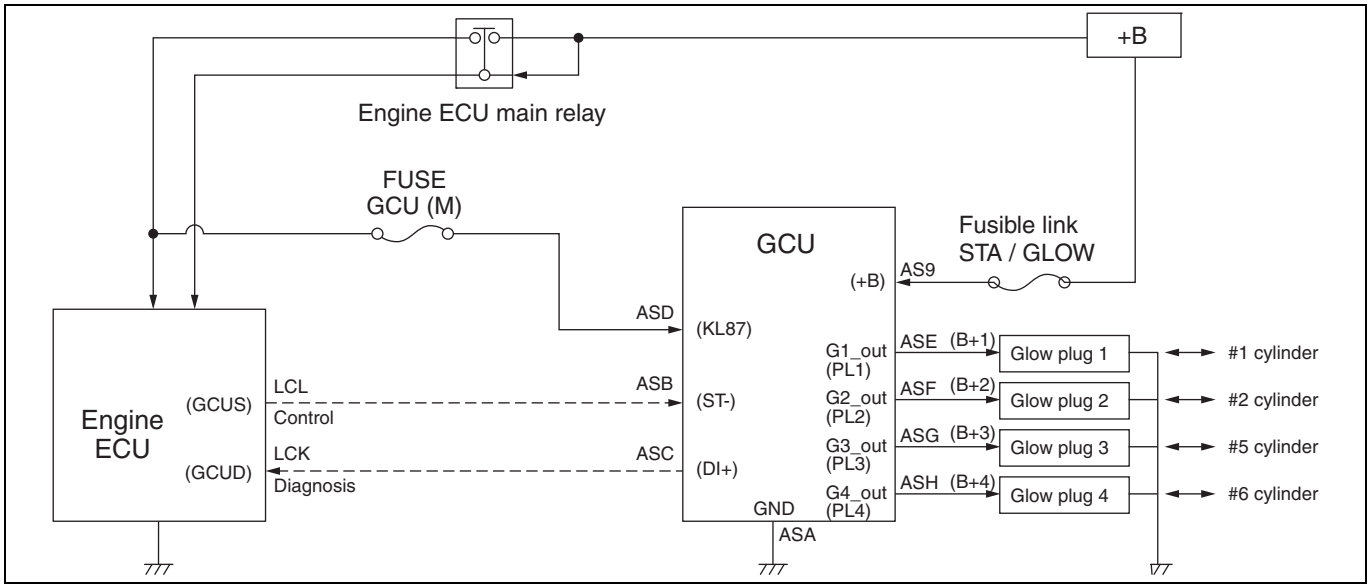


SAPH16F010300607

**1. Technical description**

- The glow plug is controlled by GCU (Glow Control Unit).
- The indicator in the meter lights up when a failure (malfunction caused by short-circuit or disconnection) occurs in the glow system.

**<Description of malfunction>**

- Circuit failure between the GCU and glow plug #6 is detected.

**2. DTC set condition**

(1) DTC detection condition

- Starter switch ON.
- Battery voltage is in the range of 10 V to 16 V.
- With glow discharge instructions in effect

(2) Judgment criteria

- Glow plug drive current < 0.5 -1.9 A, or Glow plug drive current > 21-36 A
- Failure determination time ≥ 4 sec.
- GCU diagnostic signal: 0x10 (open) 0x12 (GND short-circuit)

**3. Reset condition**

- Immediately after normal operation is restored.

**4. Indication, warning or system control regulation when the DTC is set.**

- MIL: ON
- SVS light: OFF

**5. Symptoms on the vehicle when the DTC is set**

**<Symptoms on the vehicle due to backup control (fail safe function)>**

- –

**<Symptoms on the vehicle due to malfunction>**

- Engine is difficult to start.

**6. Pre-inspection work**

- Check that the battery voltage is in the normal range.

**7. After-inspection work**

- Clear all past DTCs.
- Check that no DTC is stored after test drive.

**8. Estimated failure factors**

- Harness disconnection or short-circuit between GCU and glow plug #6
- Glow plug #6 unit is faulty.

## INSPECTION PROCEDURE: P0671, P0672, P0675 and P0676

| 1 | Inspect the fusible link (STA/GLOW) |
|---|---|

1. Check for fusing and improper fit.

**Was any failure found?**

**YES**

**Connect the fusible link correctly or replace it.**
**Perform "After-inspection work" of INFORMATION section.**

**NO**

**Go to step 2.**

| 2 | Inspect the power supply wire harness of the glow control unit (GCU) |
|---|---|

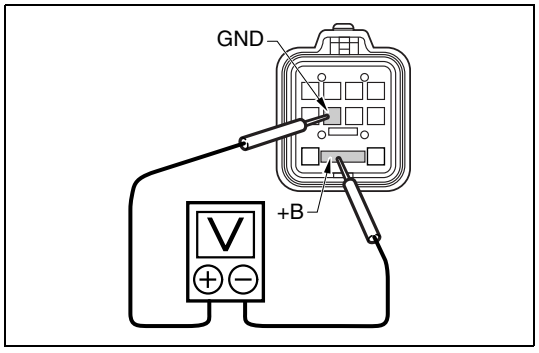

SAPH16F010300608

1. Set the starter switch to the "LOCK" position.
2. Disconnect the GCU connector.
3. Use the electrical tester to measure the voltage between the terminals of the GCU vehicle-side connector.

| Measurement conditions | Tester connections | Standard values |
|---|---|---|
| Starter switch: LOCK | GCU vehicle-side connector +B – GND | 10 – 16 V |

**Do the measurements meet the standard value?**

**YES**

**Go to step 3.**

**NO**

**Repair or replace the wire harness in the glow control unit power supply circuit (between the fusible link and the control unit).**
**Perform "After-inspection work" of INFORMATION section.**

## 3 Inspect the wire harness of the glow plug

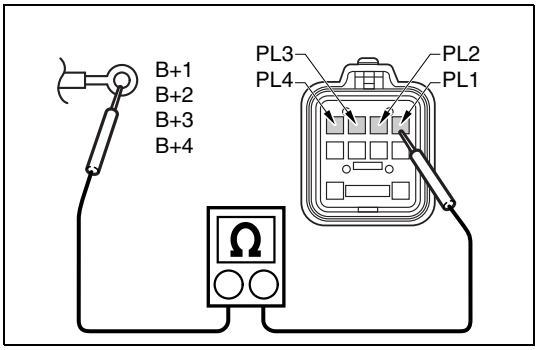


SAPH16F010300609

1. Disconnect the target's glow plug terminal.
2. Use the electrical tester to measure the resistance between the glow control unit vehicle-side connector and the target's glow plug terminal.

| Measurement conditions | Tester connections | Standard values |
|---|---|---|
| **Starter switch: LOCK** | **GCU vehicle-side connector – Target's glow plug<br>#1 Glow plug: PL1 – B+1<br>#2 Glow plug: PL2 – B+2<br>#2 Glow plug: PL3 – B+3<br>#3 Glow plug: PL4 – B+4** | **Less than 1 Ω** |

**Do the measurements meet the standard value?**

**YES**

**Replace the target's glow plug.**
**Go to step 4.**

**NO**

**Repair or replace the harness.**
**Perform "After-inspection work" of INFORMATION section.**

## 4 Check the DTC detected (Engine ECU) [HINO DX II ]

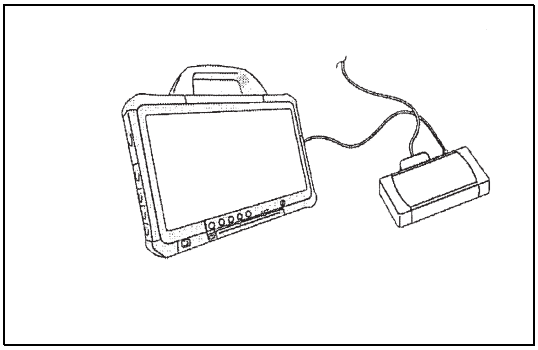

SAPH16F010300610

1. Perform engine warm-up. (engine coolant temperature: 60 °C {140 °F} or more)
2. Stop the engine and set the starter switch to the "LOCK" position.
3. Connect the vehicle to HINO DX II .
4. Set the starter switch to the "ON" position.
5. Select [Engine] and check if DTC (P0671, P0672, P0675 and P0676) has been detected.

**Has DTC (P0671, P0672, P0675 and P0676) been detected?**

**YES**

**Replace the GCU.**
**Perform "After-inspection work" of INFORMATION section.**

**NO**

**Procedure completed.**
**Perform "After-inspection work" of INFORMATION section.**

# DTC: P0683

EN01H16F01030F03001106

## P0683: Glow controller - Battery for glow controller open, GND short Glow controller - Glow control signal Glow controller - Diagnosis signal

INFORMATION

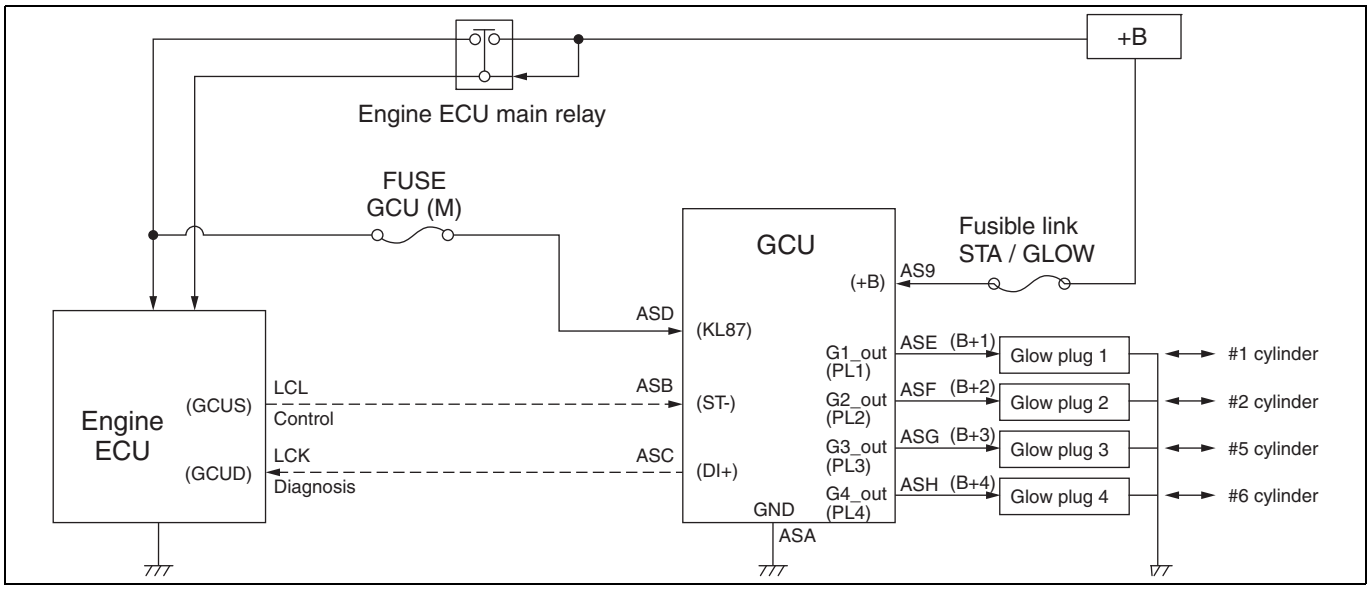


SAPH16F010300611

**1. Technical description**

- The glow plug is controlled by GCU (Glow Control Unit).
- The indicator in the meter lights up when a failure (malfunction caused by short-circuit or disconnection) occurs in the glow system.

**<Description of malfunction>**

- Detection of the GCU communication error.

**2. DTC set condition**

(1) DTC detection condition

- Starter switch ON.
- Battery voltage is in the range of 10 V to 16 V.
- With glow discharge instructions in effect

(2) Judgment criteria

- Failure determination time ≥ 4 sec.

**Any of the following conditions is present:**

- GCU is not operating (and is not responding).
- GCU diagnostic signal: 0x00/0xFF received
- Glow control signal voltage < 1 V.
- Glow control signal voltage: High (≥ 7.2 V) FIX

**3. Reset condition**

- Just after restoration to normal condition.

**4. Indication, warning or system control regulation when the DTC is set.**

- MIL: ON
- SVS light: OFF

**5. Symptoms on the vehicle when the DTC is set**

**<Symptoms on the vehicle due to backup control (fail safe function)>**

- –

**<Symptoms on the vehicle due to malfunction>**

- Engine is hard to start.

**6. Pre-inspection work**

- Check that the battery voltage is in the normal range.

**7. After-inspection work**

- Clear all past DTCs.
- Check that no DTC is stored after test drive.

**8. Estimated failure factors**

- Blown, improperly connected, or half-connected fuse
- Harness disconnection or short-circuit
- Abnormal ground potential difference between engine ECU and GCU
- GCU failure

## INSPECTION PROCEDURE: P0683

| 1 | Inspect the fuse and fusible link |
|---|---|

1. Check the fuse (GCU (M)) and fusible link (STA/GLOW) for fusing or improper fit.

**Was any failure found?**

**YES**

**Connect the fuse and fusible link properly or replace.**
**Perform "After-inspection work" of INFORMATION section.**

**NO**

**Go to step 2.**

| 2 | Inspect the GCU circuit |
|---|---|

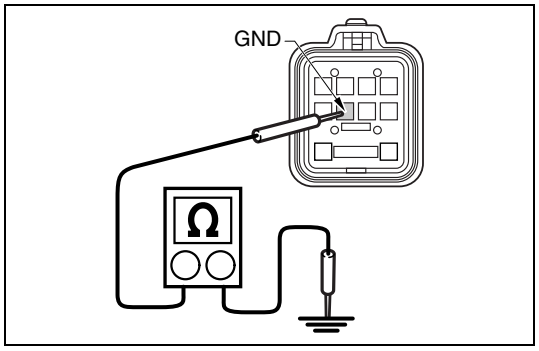

SAPH16F010300612

1. Set the starter switch to the "LOCK" position.
2. Disconnect the GCU connector.
3. Use the electrical tester to measure the resistance between the GCU vehicle-side connector GND terminal and ground.

| Measurement conditions | Tester connections | Standard values |
|---|---|---|
| Starter switch: LOCK | GCU chassis vehicle-side connector GND – Ground | Less than 1 Ω |

**Do the measurements meet the standard value?**

**YES**

**Go to step 3.**

**NO**

**Check the GCU ground circuit.**
**Perform "After-inspection work" of INFORMATION section.**

| 3 | Inspect the GCU power supply circuit |
|---|---|

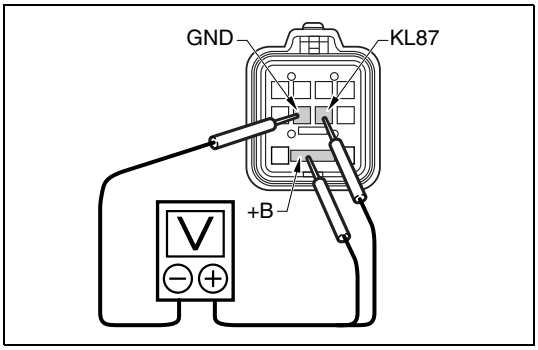


SAPH16F010300613

1. Set the starter switch to the "ON" position.
2. Use the electrical tester to measure the voltage between the terminals of the GCU vehicle-side connector.

| Measurement conditions | Tester connections | Standard values |
|---|---|---|
| Starter switch: ON | GCU vehicle-side connector terminal – GND<br>+B – GND<br>KL87 – GND | 10 – 16 V |

**Do the measurements meet the standard value?**

**YES**

**Go to step 4.**

**NO**

**Inspect the GCU power supply circuit. Perform "After-inspection work" of INFORMATION section.**

| 4 | Inspect the harness of the GCU |
|---|---|

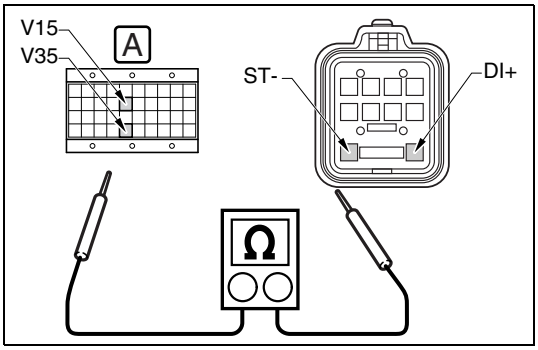


SAPH16F010300614

1. Set the starter switch to the "LOCK" position.
2. Connect the signal check harness to the engine ECU vehicle-side harness. (Do not connect the harness to the ECU.)
3. Use the electrical tester to measure the resistance between the GCU vehicle-side connector terminals and engine ECU (signal check harness) terminals.

| Measurement conditions | Tester connections | Standard values |
|---|---|---|
| Starter switch: LOCK | GCU vehicle-side connector terminals – engine ECU (signal check harness) terminals<br>DI+ – GCUD(V35)<br>ST- – GCUS(V15) | 1 Ω or less |

**Do the measurements meet the standard value?**

**YES**

**Go to step 5.**

**NO**

**Repair or replace the harness.**
**Perform "After-inspection work" of INFORMATION section.**

| 5 | Check the ground circuit voltage |
|---|---|

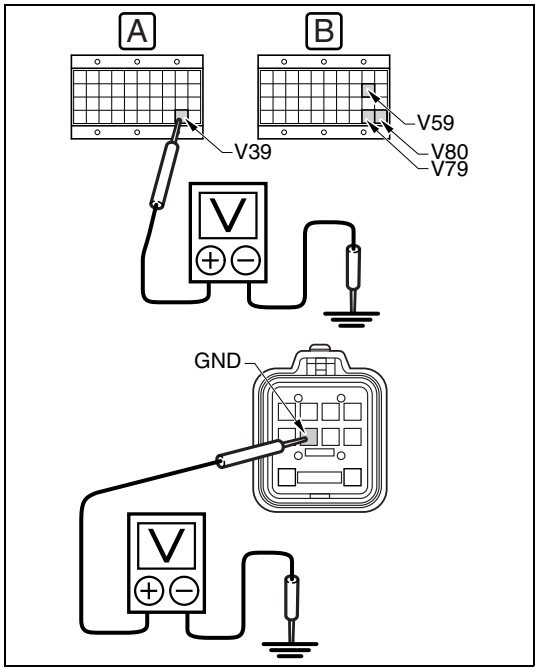


SAPH16F010300615

1. Set the starter switch to the "ON" position.
2. Use the electrical tester to measure the voltage between each terminal in the engine ECU (signal check harness) and ground.
3. Measure the voltage between the GCU vehicle-side connector GND terminal and ground.
4. Check the ground circuit potential difference between the engine ECU and the glow control unit.

| Measurement conditions | Tester connections | Standard values |
|---|---|---|
| Starter switch: ON | Engine ECU (signal check harness)<br>PGD1(V39) – Ground<br>PGD2(V59) – Ground<br>PGD3(V79) – Ground<br>PGD4(V80) – Ground<br>GCU vehicle-side connector<br>GND – Ground | Potential deference:<br>400 mV or less |

**Do the measurements meet the standard value?**

**YES**

**Replace the GCU.**
**Perform "After-inspection work" of INFORMATION section.**

**NO**

**Check the ground circuit.**
**Perform "After-inspection work" of INFORMATION section.**

# DTC: P0686

EN01H16F01030F03001107

## P0686: ECM/PCM Power Relay Control Circuit high

INFORMATION

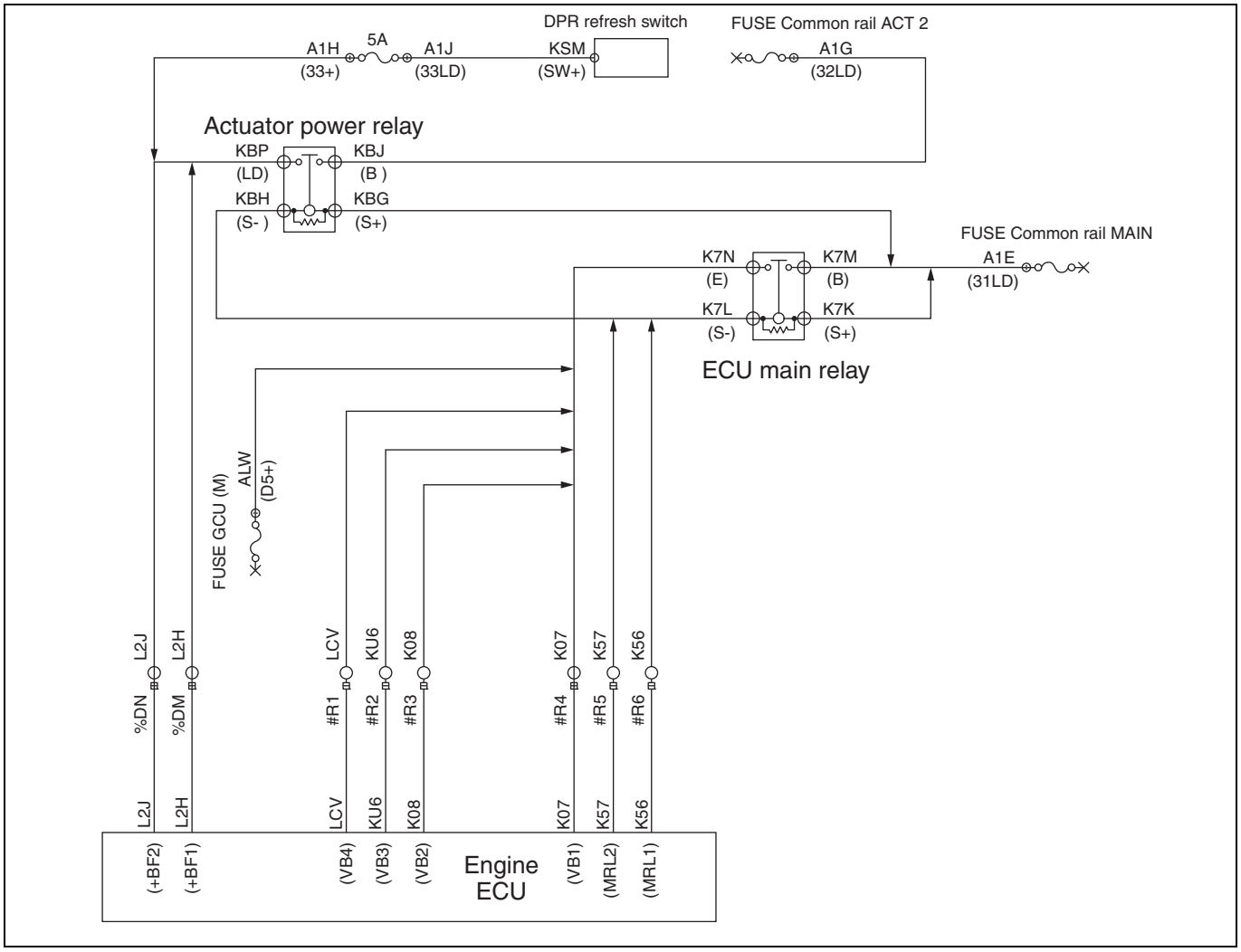


SAPH16F010300616

**1. Technical description**

- The main relay supplies power from the battery to the ECU.

**<Description of malfunction>**

- The main relay cannot be turned OFF.

**2. DTC set condition**

(1) DTC detection condition

- Battery voltage is in the range of 10 V to 16 V.

(2) Judgment criteria

- With the main relay in OFF position, 8 V or higher power supply voltage remains for 60 seconds.

**3. Reset condition**

- After normal operation is restored and the starter switch is on the "LOCK" position.

**4. Indication, warning or system control regulation when the DTC is set.**

- MIL: OFF
- SVS light: ON

**5. Symptoms on the vehicle when the DTC is set**

**<Symptoms on the vehicle due to backup control (fail safe function)>**

- –

**<Symptoms on the vehicle due to malfunction>**

- Battery is depleted.

**6. Pre-inspection work**

- Check that the battery voltage is in the normal range.

**7. After-inspection work**

- Clear all past DTCs.
- Check that no DTC is stored after test drive.

**8. Estimated failure factors**

- Harness disconnection or short-circuit
- Looseness or poor contact of connector
- Main relay failure
- Engine ECU failure

## INSPECTION PROCEDURE: P0686

| 1 | Inspect the main relay |
|---|---|

1. Check the connection of the main relay (fuse and inside relay block B) (Looseness or poor contact).

**Was any failure found?**

**YES**

**Connect securely, repair if needed.**
**Perform "After-inspection work" of INFORMATION section.**

**NO**

**Go to step 2.**

| 2 | Inspect the main relay unit |
|---|---|

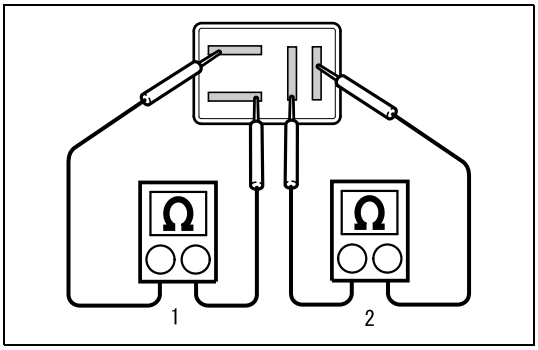


SAPH16F010300617

1. Set the starter switch to the "LOCK" position.
2. Disconnect the main relay.
3. Use the electrical tester to measure the resistance between the terminals of the main relay.

| Tester connections | Standard values |
|---|---|
| Main relay terminals | 1 in the figure: 167 Ω<br>2 in the figure: ∞ Ω |

**Do the measurements meet the standard value?**

**YES**

**Go to step 3.**

**NO**

**Repair or replace the relay.**
**Perform "After-inspection work" of INFORMATION section.**

| 3 | Inspect the main relay power supply circuit |
|---|---|

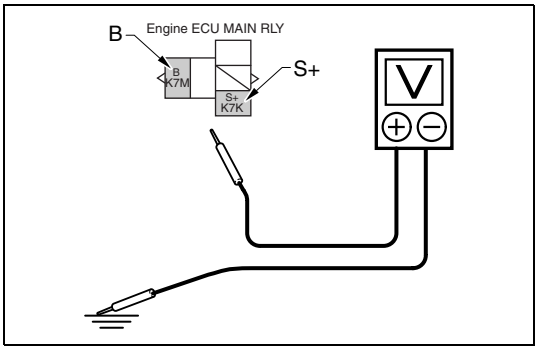


SAPH16F010300618

1. Set the starter switch to the "ON" position.
2. Use the electrical tester to measure the voltage between each terminal in the main relay vehicle-side connector (fuse and inside relay block B) and ground.

| Measurement conditions | Tester connections | Standard values |
|---|---|---|
| Starter switch: ON | Main relay vehicle-side connector<br>B – Ground<br>S+ – Ground | 10 V or more |

**Do the measurements meet the standard value?**

| YES | NO |
|---|---|
| **Go to step 4.** | **Repair or replace the main relay power supply circuit.<br>Perform "After-inspection work" of INFORMATION section.** |

## 4 Inspect the main relay power supply

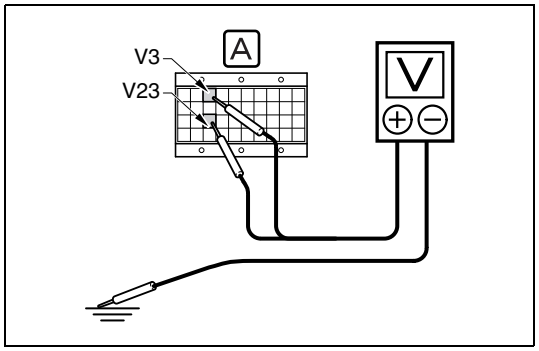


SAPH16F010300619

1. Set the starter switch to the "LOCK" position.
2. Connect the main relay.
3. Connect the signal check harness to the engine ECU vehicle-side harness. (Do not connect the harness to the ECU.)
4. Set the starter switch to the "ON" position.
5. Use the electrical tester to measure the voltage between the engine ECU (signal check harness) terminals and ground.

| Measurement conditions | Tester connections | Standard values |
|---|---|---|
| **Starter switch: ON** | **Engine ECU (signal check harness)<br>MRL1(V3) – Ground<br>MRL2(V23) – Ground** | **10 V or more** |

**Do the measurements meet the standard value?**

| YES | NO |
|---|---|
| **Replace the engine ECU.<br>Perform "After-inspection work" of INFORMATION section.** | **Repair or replace the harness.<br>Perform "After-inspection work" of INFORMATION section.** |

# DTC: P0698

EN01H16F01030F03001108

## P0698: ECU sensor power supply 3 failure (Low)

INFORMATION

**1. Technical description**

- Power is supplied to the sensor power supply 3 circuit (Boost pressure sensor).

**<Description of malfunction>**

- Low power supply failure of the sensor power supply circuit is detected.

**2. DTC set condition**

(1) DTC detection condition

- Starter switch ON.
- Battery voltage is in the range of 11 V to 16 V

Above condition continues for 5 seconds or more.

(2) Judgment criteria

- AC/DC converter input sensor power supply voltage is detected 3.5 V or less for at least 3 seconds.

**3. Reset condition**

- Immediately after normal operation is restored.

**4. Indication, warning or system control regulation when the DTC is set.**

- MIL: OFF
- SVS light: OFF

**5. Symptoms on the vehicle when the DTC is set**

**<Symptoms on the vehicle due to backup control (fail safe function)>**

- –

**<Symptoms on the vehicle due to malfunction>**

- –

**6. Pre-inspection work**

- Check that the battery voltage is in the normal voltage

**7. After-inspection work**

- Clear all past DTCs
- Check that no DTC is detected after test drive

**8. Estimated failure factors**

- Harness failure (sensor power supply/GND circuit GND short-circuit)
- Engine ECU sensor power supply failure, internal circuit failure

## INSPECTION PROCEDURE: P0698

| 1 | Check the DTC detected [HINO DX II ] |
|---|---|

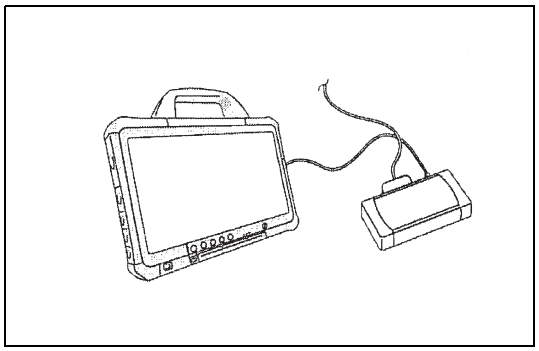

SAPH16F010300620

1. Erase the trouble history using HINO DX II and set the starter switch to the "LOCK" position.
2. Disconnect the boost pressure sensor connector.
3. Set the starter switch to the "ON" position.
4. Select [Engine] and check if P0698 has been detected.

| Measurement conditions |
|---|
| Starter switch: LOCK → ON |

**Has DTC P0698 been detected?**

**YES**

**Replace the engine ECU.**
**Perform "After-inspection work" of INFORMATION section.**

**NO**

**Replace the boost pressure sensor.**
**Perform "After-inspection work" of INFORMATION section.**

# DTC: P0699

EN01H16F01030F03001109

## P0698: ECU sensor power supply 3 failure (High)

INFORMATION

**1. Technical description**

- Power is supplied to the sensor power supply 3 circuit (Boost pressure sensor).

**<Description of malfunction>**

- High power supply failure of the sensor power supply circuit is detected.

**2. DTC set condition**

(1) DTC detection condition

- Starter switch ON.
- Battery voltage is in the range of 10 V to 16 V

Above condition continues for 5 seconds or more.

(2) Judgment criteria

- AC/DC converter input sensor power supply voltage is detected 4.5 V or more for at least 3 seconds.

**3. Reset condition**

- Immediately after normal operation is restored.

**4. Indication, warning or system control regulation when the DTC is set.**

- MIL: OFF
- SVS light: OFF

**5. Symptoms on the vehicle when the DTC is set**

**<Symptoms on the vehicle due to backup control (fail safe function)>**

- –

**<Symptoms on the vehicle due to malfunction>**

- –

**6. Pre-inspection work**

- Check that the battery voltage is in the normal voltage

**7. After-inspection work**

- Clear all past DTCs
- Check that no DTC is detected after test drive

**8. Estimated failure factors**

- Harness failure (Battery power supply of sensor power supply circuit short-circuit)
- Engine ECU sensor power supply failure, internal circuit failure

## INSPECTION PROCEDURE: P0699

| 1 | Inspect the boost pressure sensor power supply |
|---|---|

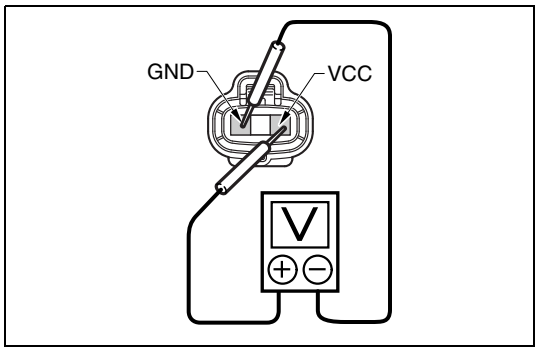

SAPH16F010300621

1. Set the starter switch to the "LOCK" position.
2. Disconnect the boost pressure sensor connector.
3. Set the starter switch to the "ON" position.
4. Use the electrical tester to measure the voltage between the terminals of the boost pressure sensor vehicle-side connector using the electrical tester.

| Measurement conditions | Tester connections | Standard values |
|---|---|---|
| Starter switch: ON | Boost pressure sensor vehicle-side connector VCC – GND | 4.75 – 5.25 V |

**Do the measurements meet the standard value?**

**YES**

**Replace the engine ECU.**
**Perform "After-inspection work" of INFORMATION section.**

**NO**

**Repair or replace the harness.**
**Perform "After-inspection work" of INFORMATION section.**

# DTC: P06A4

EN01H16F01030F03001110

## P06A4: ECU sensor power supply 4 failure (Low)

INFORMATION

**1. Technical description**

- Power is supplied to the sensor power supply 4 circuit (Diesel throttle).

**<Description of malfunction>**

- Low power supply failure of the sensor power supply circuit is detected.

**2. DTC set condition**

(1) DTC detection condition

- Starter switch ON.
- Battery voltage is in the range of 10 V to 16 V

Above condition continues for 5 seconds or more.

(2) Judgment criteria

- AC/DC converter input sensor power supply voltage is detected 3.5 V or less for at least 3 seconds.

**3. Reset condition**

- Immediately after normal operation is restored.

**4. Indication, warning or system control regulation when the DTC is set.**

- MIL: OFF
- SVS light: OFF

**5. Symptoms on the vehicle when the DTC is set**

**<Symptoms on the vehicle due to backup control (fail safe function)>**

- –

**<Symptoms on the vehicle due to malfunction>**

- –

**6. Pre-inspection work**

- Check that the battery voltage is in the normal voltage

**7. After-inspection work**

- Clear all past DTCs
- Check that no DTC is detected after test drive

**8. Estimated failure factors**

- Harness failure (sensor power supply circuit GND short-circuit)
- Engine ECU sensor power supply failure, internal circuit failure

## INSPECTION PROCEDURE: P06A4

| 1 | Check the DTC detected [HINO DX II ] |
|---|---|

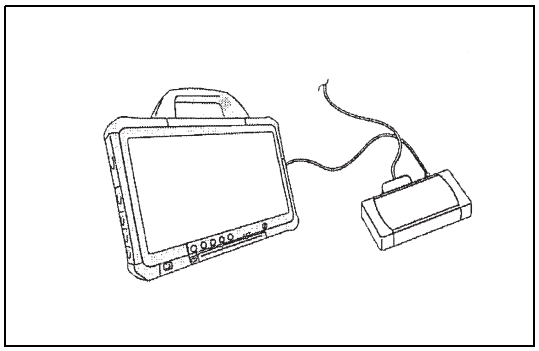

SAPH16F010300622

1. Erase the trouble history using HINO DX II and set the starter switch to the "LOCK" position.
2. Disconnect the diesel throttle position sensor connector.
3. Set the starter switch to the "ON" position.
4. Select [Engine] and check if P0698 has been detected.

| Measurement conditions |
|---|
| Starter switch: LOCK → ON |

**Has DTC P06A4 been detected?**

**YES**

**Replace the engine ECU.**
**Perform "After-inspection work" of INFORMATION section.**

**NO**

**Replace the diesel throttle position sensor.**
**Perform "After-inspection work" of INFORMATION section.**

# DTC: P06A5

EN01H16F01030F03001111

## P06A5: ECU sensor power supply 4 failure (High)

INFORMATION

**1. Technical description**

- Power is supplied to the sensor power supply 3 circuit (Diesel throttle).

**<Description of malfunction>**

- High power supply failure of the sensor power supply circuit is detected.

**2. DTC set condition**

(1) DTC detection condition

- Starter switch ON.
- Battery voltage is in the range of 11 V to 16 V

Above condition continues for 5 seconds or more.

(2) Judgment criteria

- AC/DC converter input sensor power supply voltage is detected 3.5 V or more for at least 3 seconds.

**3. Reset condition**

- Immediately after normal operation is restored.

**4. Indication, warning or system control regulation when the DTC is set.**

- MIL: OFF
- SVS light: OFF

**5. Symptoms on the vehicle when the DTC is set**

**<Symptoms on the vehicle due to backup control (fail safe function)>**

- –

**<Symptoms on the vehicle due to malfunction>**

- –

**6. Pre-inspection work**

- Check that the battery voltage is in the normal voltage

**7. After-inspection work**

- Clear all past DTCs
- Check that no DTC is detected after test drive

**8. Estimated failure factors**

- Harness failure (Battery power supply short-circuit)
- Engine ECU sensor power supply failure, internal circuit failure

## INSPECTION PROCEDURE: P06A5

| 1 | Inspect the diesel throttle (intake throttle valve) position sensor 1 power supply |
|---|---|

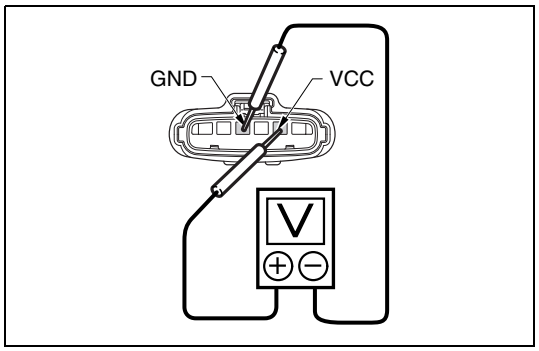

SAPH16F010300623

1. Set the starter switch to the "LOCK" position.
2. Disconnect the connector of the diesel throttle (intake throttle valve) position sensor 1 connector.
3. Set the starter switch to the "ON" position.
4. Use the electrical tester to measure the voltage between the terminals of the diesel throttle (intake throttle valve) position sensor 1 vehicle-side connector.

| Measurement conditions | Tester connections | Standard values |
|---|---|---|
| Starter switch: ON | Diesel throttle (intake throttle valve) position sensor 1 vehicle-side connector VCC – GND | 4.5 – 5.5 V |

**Do the measurements meet the standard value?**

**YES**

**Replace the engine ECU.**
**Perform "After-inspection work" of INFORMATION section.**

**NO**

**Repair or replace the harness.**
**Perform "After-inspection work" of INFORMATION section.**

# DTC: P06D3 and P06D4

EN01H16F01030F03001112

## P06D3: Air flow sensor power supply failure Short to GND

INFORMATION

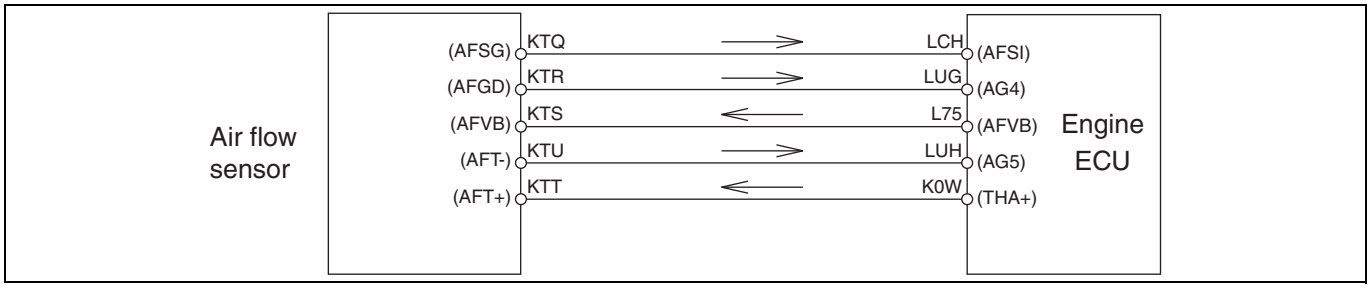


SAPH16F010300624

**1. Technical description**

- The air flow sensor installed to the air cleaner consistently measures an intake air volume.
- The engine ECU supplies power to the air flow sensor.

**<Description of malfunction>**

- Excessively low voltage has been detected in the air flow sensor power supply.

**2. DTC set condition**

(1) DTC detection condition

- Starter switch ON.
- Battery voltage is in the range of 10 V to 16 V.

The conditions described above remain for 5 seconds or longer.

(2) Judgment criteria

- Voltage of the air flow sensor power supply circuit remains at 5.6 V or lower for 1 sec.

**3. Reset condition**

- Normal operation instantly restored once values deviate from judgment criteria.

**4. Indication, warning or system control regulation when the DTC is set.**

- MIL: OFF
- SVS light: OFF

**5. Symptoms on the vehicle when the DTC is set**

**<Symptoms on the vehicle due to backup control (fail safe function)>**

- –

**<Symptoms on the vehicle due to malfunction>**

- –

**6. Pre-inspection work**

- Check that the battery voltage is in the normal range.

**7. After-inspection work**

- Clear all past DTCs.
- Check that no DTC is detected after test drive.

**8. Estimated failure factors**

- Harness disconnection or short-circuit
- Air flow sensor failure
- Engine ECU failure

## P06D4: Air flow sensor power supply failure (High)

INFORMATION

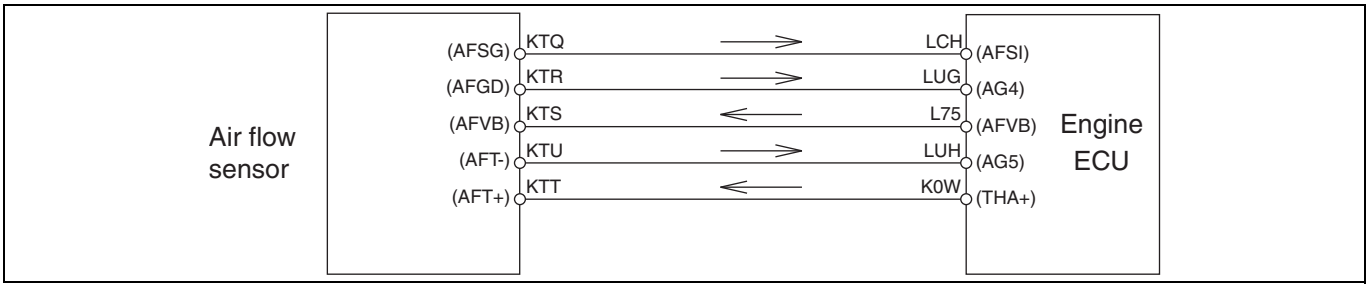


SAPH16F010300625

**1. Technical description**

- The air flow sensor installed to the air cleaner consistently measures an intake air volume.
- The engine ECU supplies power to the air flow sensor.

**<Description of malfunction>**

- Excessively low voltage has been detected in the air flow sensor power supply.

**2. DTC set condition**

(1) DTC detection condition

- Starter switch ON.
- Battery voltage is in the range of 10 V to 16 V.

The conditions described above remain for 5 seconds or longer.

(2) Judgment criteria

- Voltage of air flow sensor power supply circuit ≥ 20 V for 1 second.

**3. Reset condition**

- Normal operation instantly restored once values deviate from judgment criteria.

**4. Indication, warning or system control regulation when the DTC is set.**

- MIL: OFF
- SVS light: OFF

**5. Symptoms on the vehicle when the DTC is set**

**<Symptoms on the vehicle due to backup control (fail safe function)>**

- –

**<Symptoms on the vehicle due to malfunction>**

- –

**6. Pre-inspection work**

- Check that the battery voltage is in the normal range.

**7. After-inspection work**

- Clear all past DTCs.
- Check that no DTC is detected after test drive.

**8. Estimated failure factors**

- Harness disconnection or short-circuit
- Air flow sensor failure
- Engine ECU failure

## INSPECTION PROCEDURE: P06D3 and P06D4

| 1 | Check the DTC detected (Engine ECU) [HINO DX ll ] |
|---|---|

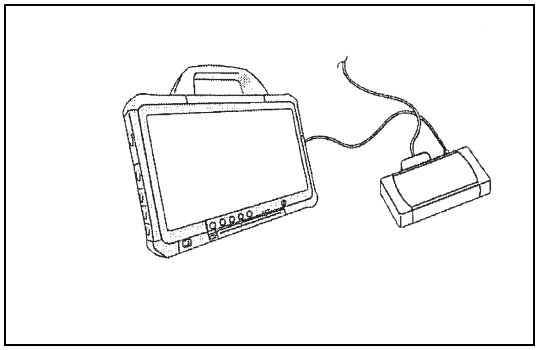

SAPH16F010300626

1. Set the starter switch to the "LOCK" position.
2. Disconnect the air flow sensor connector.
3. Set the starter switch to the "ON" position.
4. Select [Engine] and check if the DTC (P06D3 or P06D4) has been detected.

**Has DTC (P06D3 or P06D4) been detected?**

**YES**

**Go to step 2.**

**NO**

**Replace the air flow sensor.**
**Perform "After-inspection work" of INFORMATION section.**

| 2 | Inspect the air flow sensor connector |
|---|---|

1. Check the connection of the air flow sensor connector (Looseness and poor contact).

**Was any failure found?**

**YES**

**Connect securely, repair if needed.**
**Perform "After-inspection work" of INFORMATION section.**

**NO**

**Go to step 3.**

| 3 | Inspect the air flow sensor |
|---|---|

1. Check the installation of the air flow sensor.
2. Make sure there is no dirt or damage to the air flow sensor.

**Was any failure found?**

**YES**

**If dirt, clogging or damage was found in sensing unit, replace the air flow sensor.**
**Perform "After-inspection work" of INFORMATION section.**

**NO**

**Go to step 4.**

| 4 | Inspect the air flow sensor unit |
|---|---|

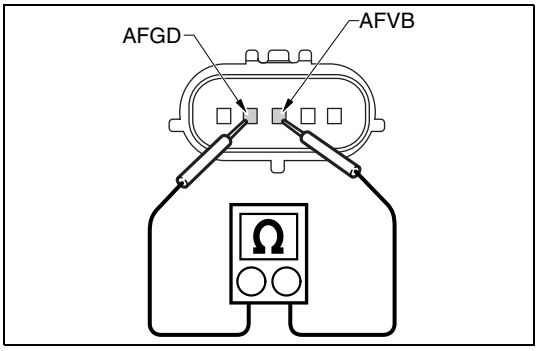

SAPH16F010300627

1. Use the electrical tester to measure the resistance between the terminals of the air flow sensor.

| Measurement conditions | Tester connections | Standard values |
|---|---|---|
| Starter switch: LOCK | Air flow sensor AFVB – AFGD | Some resistance |

**Do the measurements meet the standard value?**

**YES**

**Go to step 5.**

**NO**

**Replace the air flow sensor.**
**Perform "After-inspection work" of INFORMATION section.**

## 5 Inspect the air flow sensor power supply

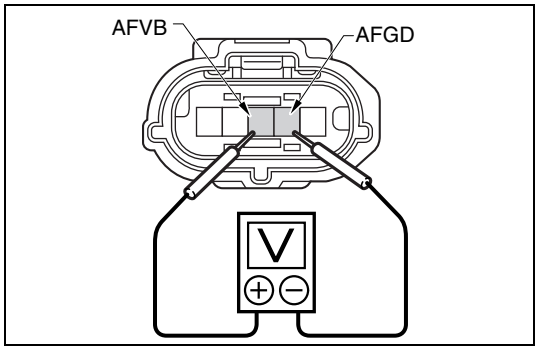

SAPH16F010300628

1. Set the starter switch to the "ON" position.
2. Use the electrical tester to measure the voltage between the terminals of the air flow sensor vehicle-side connector.

| Measurement conditions | Tester connections | Standard values |
|---|---|---|
| Starter switch: ON | Air flow sensor vehicle-side connector terminals AFVB – AFGD | 11.5 – 13.5 V |

**Do the measurements meet the standard value?**

**YES**

**Go to step 8.**

**NO**

**Go to step 6.**

## 6 Inspect for short-circuit in wire harness or air flow sensor

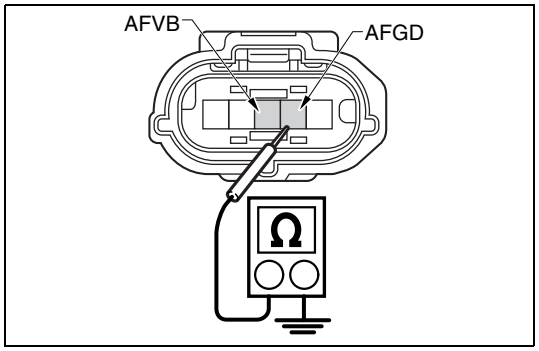

SAPH16F010300629

1. Set the starter switch to the "LOCK" position.
2. Disconnect the engine ECU connector.
3. Use the electrical tester to measure the resistance between the air flow sensor vehicle-side connector terminals and ground.

| Measurement conditions | Tester connections | Standard values |
|---|---|---|
| Starter switch: LOCK | Air flow sensor vehicle-side connector AFVB – Ground AFGD – Ground | ∞ Ω |

**Do the measurements meet the standard value?**

**YES**

**Go to step 7.**

**NO**

**Repair or replace the harness.**
**Perform "After-inspection work" of INFORMATION section.**

| 7 | Inspect for disconnection in wire harness or air flow sensor |
|---|---|

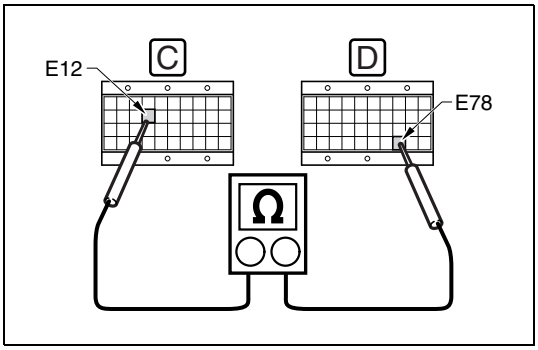

SAPH16F010300630

1. Connect the air flow sensor connector.
2. Connect the signal check harness to the engine ECU vehicle-side harness. (Do not connect the harness to the ECU.)
3. Use the electrical tester to measure the resistance between the terminals of the engine ECU (signal check harness).

| Measurement conditions | Tester connections | Standard values |
|---|---|---|
| **Starter switch: LOCK** | **Engine ECU (signal check harness) AFVB(E12) – AG4(E78)** | **Some resistance** |

**Do the measurements meet the standard value?**

**YES**

**Go to step 8.**

**NO**

**Repair or replace the harness.**
**Perform "After-inspection work" of INFORMATION section.**

| 8 | Check the DTC detected (Engine ECU) [HINO DX II ] |
|---|---|

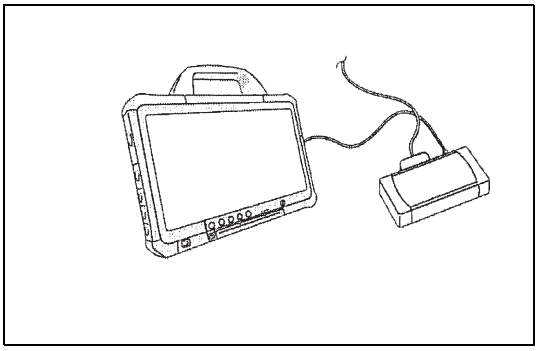
SAPH16F010300631

1. Warm-up the engine (engine coolant temperature: 60 °C {140 °F} or more)
2. Stop the engine and set the starter switch to the "LOCK" position.
3. Connect the vehicle to HINO DX II .
4. Set the starter switch to the "ON" position.
5. Select [Engine] and check if the DTC (P06D3 or P06D4) has been detected.

**Has DTC (P06D3 or P06D4) been detected?**

**YES**

**Replace the engine ECU.**
**Perform "After-inspection work" of INFORMATION section.**

**NO**

**Procedure completed.**
**Perform "After-inspection work" of INFORMATION section.**

# DTC: P0704

EN01H16F01030F03001113

## P0704: Clutch Switch Input Circuit

INFORMATION

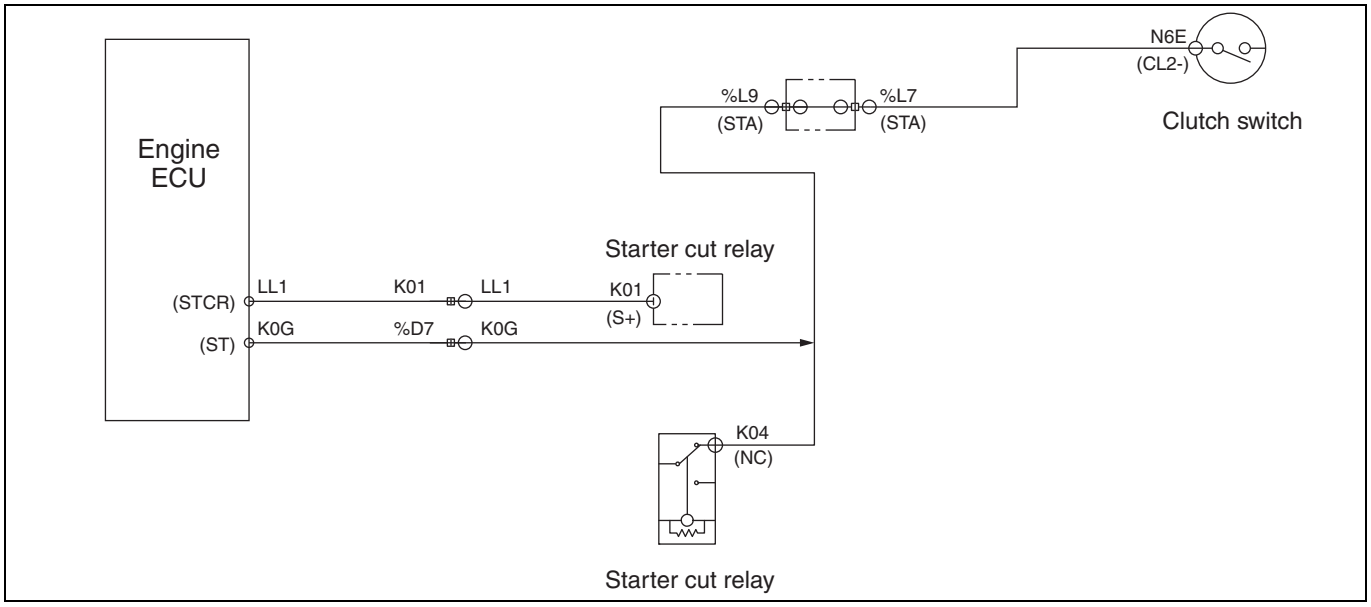


SAPH16F010300632

**1. Technical description**

- Presence of input of clutch switch signals is sensed by the ECU through the clutch switch.

**<Description of malfunction>**

- The clutch switch cannot be correctly sensed.

**2. DTC set condition**

(1) Check conditions

- Vehicle speed is 50 km/h {30 mph} or higher.
- Vehicle with manual transmission

(2) Judgment criteria

- This will be detected if presence or absence of input of clutch switch signals cannot be sensed after 5 or more cycles of vehicle stop (vehicle speed = 0 km/h {0 mph}) → run → stop.

**3. Reset condition**

- Immediately after normal operation is restored.

**4. Indication, warning or system control regulation when the DTC is set.**

- MIL: OFF
- SVS light: OFF
- During OFF failure: Cruise control is not available.
- During ON failure: Cruise control is not canceled when the clutch pedal is depressed.

**5. Symptoms on the vehicle when the DTC is set**

**<Symptoms on the vehicle due to backup control (fail safe function)>**

- During OFF failure: Cruise control does not work.
- During ON failure: Cruise control is not canceled when the clutch pedal is depressed.

**<Symptoms on the vehicle due to malfunction>**

- –

**6. Pre-inspection work**

- Check that the battery voltage is in the normal range.

**7. After-inspection work**

- Clear all past DTCs.
- Check that no DTC is detected after test drive.

**8. Estimated failure factors**

- Driving with foot on clutch pedal (OFF failure judgment)
- Improperly adjusted clutch switch (does not turn ON when pedal is released)
- Clutch switch OFF failure, circuit disconnection, faulty contact
- Malfunction of ECU

## INSPECTION PROCEDURE: P0704

**1 Inspect the clutch switch**

1. Check if the clutch switch is properly adjusted.

**Was any failure found?**

**YES**

**Adjust the clutch switch.**
**Perform "After-inspection work" of INFORMATION section.**

**NO**

**Go to step 2.**

**2 Inspect the clutch switch connector**

1. Check the connection of the clutch switch connector (Looseness and poor contact).

**Was any failure found?**

**YES**

**Connect securely, repair if needed.**
**Perform "After-inspection work" of INFORMATION section.**

**NO**

**Go to step 3.**

**3 Inspect the clutch switch unit**

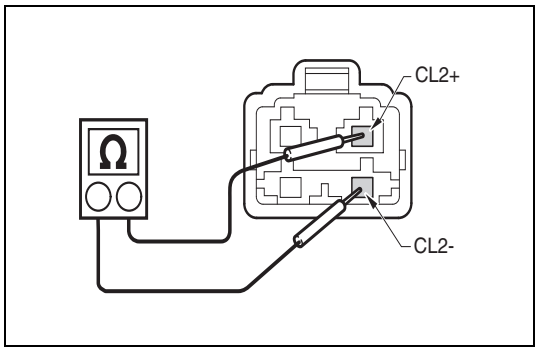

SAPH16F010300633

1. Set the starter switch to the "LOCK" position.
2. Disconnect the clutch switch connector.
3. Use the electrical tester to measure the resistance between the terminals of the clutch switch.

| Tester connections | Standard values |
|---|---|
| **Clutch switch CL2+ – CL2-** | **With switch depressed (ON): < 1 Ω With switch released (OFF): ∞ Ω** |

**Do the measurements meet the standard value?**

**YES**

**Go to step 4.**

**NO**

**Replace the clutch switch.**
**Perform "After-inspection work" of INFORMATION section.**

## 4 Inspect the power supply of the clutch switch

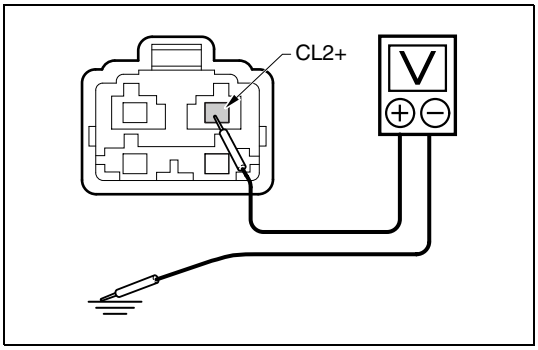


SAPH16F010300634

1. Set the starter switch to the "ON" position.
2. Use the electrical tester to measure the voltage between the CL2+ terminal in the clutch switch vehicle-side connector and ground.

| Measurement conditions | Tester connections | Standard values |
|---|---|---|
| Starter switch: ON | Clutch switch vehicle-side connector<br>CL2+ – Ground | More than 10 V |

**Do the measurements meet the standard value?**

**YES**

**Go to step 5.**

**NO**

**Repair the clutch switch power circuit.**
**Perform "After-inspection work" of INFORMATION section.**

## 5 Inspect the clutch switch harness

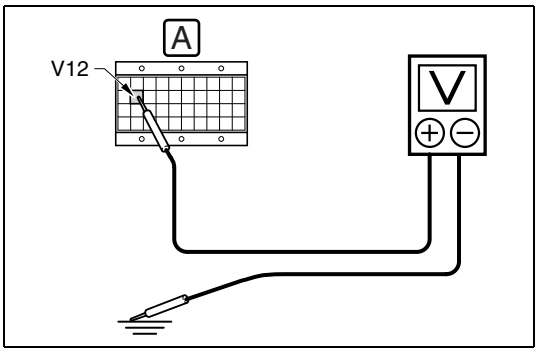


SAPH16F010300635

1. Set the starter switch to the "LOCK" position.
2. Connect the clutch switch connector.
3. Connect the signal check harness to the engine ECU vehicle-side harness. (Do not connect the harness to the ECU.)
4. Set the starter switch to the "ON" position.
5. Use the electrical tester to measure the voltage between the terminals of the engine ECU (signal check harness) and ground.

| Measurement conditions | Tester connections | Standard values |
|---|---|---|
| Starter switch: ON | Engine ECU (signal check harness)<br>ST(V12) – Ground | With clutch pedal depressed: 0 V<br>With clutch pedal released: ≥ 10 V |

**Do the measurements meet the standard value?**

**YES**

**Replace the engine ECU.**
**Perform "After-inspection work" of INFORMATION section.**

**NO**

**Repair or replace the harness.**
**Perform "After-inspection work" of INFORMATION section.**

# DTC: P073D

EN01H16F01030F03001114

## P073D: Transmission information (automatic transmission) - rationality

INFORMATION [TRANS model]

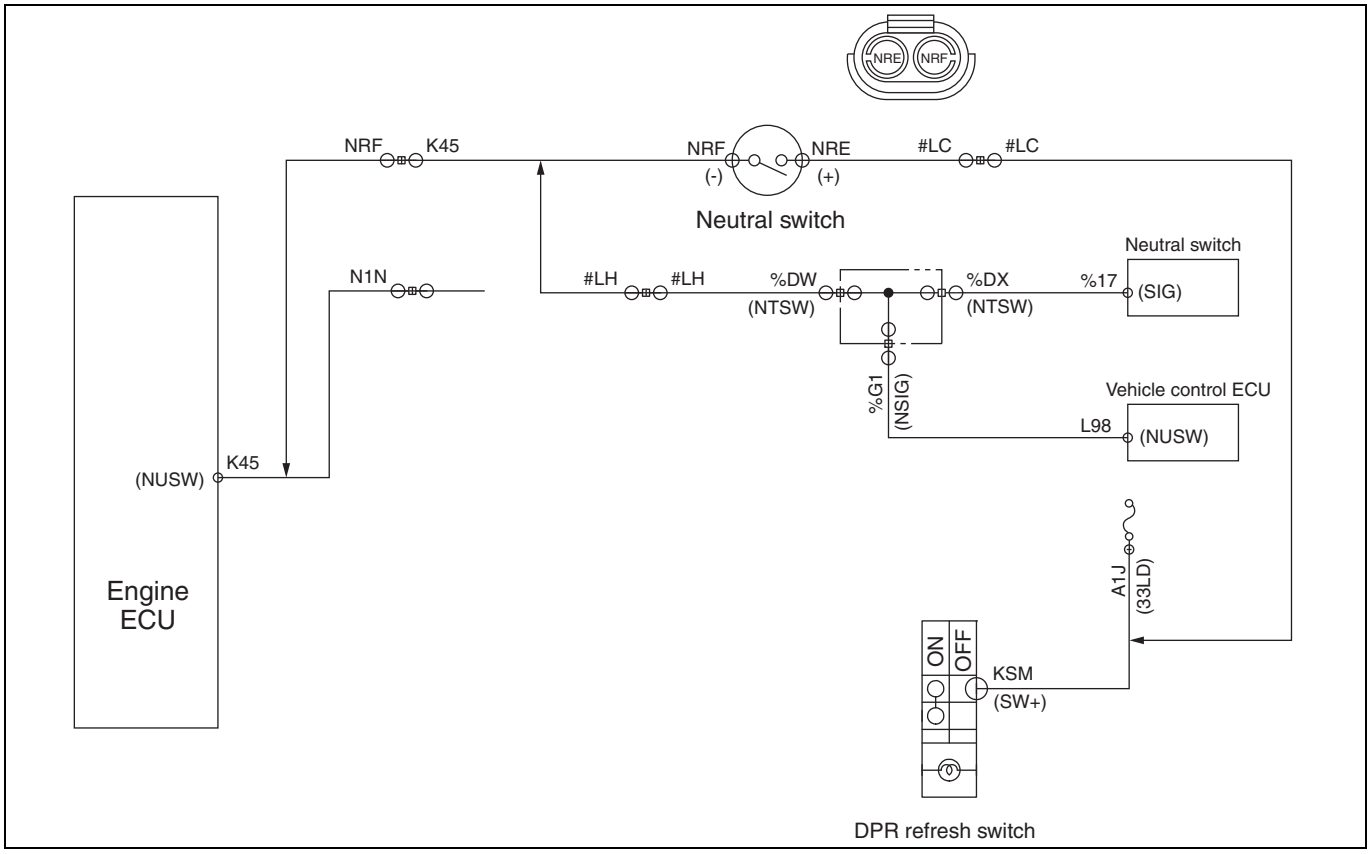


SAPH16F010300636

**1. Technical description**

- Transmission information is transferred through CAN communication.

**<Description of malfunction>**

- Information sent from the transmission ECU (TRANS) is incorrect.
- Information from transmission ECU (TRANS) and neutral switch information are abnormal.

**2. DTC set condition**

(1) DTC detection condition

- Battery voltage is in the range of 10 V to 16 V.
- Compare the parameters listed below.
  - Neutral switch
  - Neutral information
  - Lockup information

(2) Judgment criteria

**P073D (incorrect transmission information) is detected under the conditions described below. (Numbers (1) through (3) represent the order of priority.)**

1. Lockup information is incorrect. (Communication between vehicle ECU and transmission ECU is interrupted.)
2. While non-neutral status is sensed as neutral information, the neutral switch senses neutral status for continuous 10 seconds.
3. While lockup information is sensed, neutral status is sensed as neutral information for continuous 10 seconds.

**3. Reset condition**

- Immediately after normal operation is restored.

**4. Indication, warning or system control regulation when the DTC is set.**

- MIL: ON
- SVS light: OFF

**5. Symptoms on the vehicle when the DTC is set**

**<Symptoms on the vehicle due to backup control (fail safe function)>**

- –

**<Symptoms on the vehicle due to malfunction>**

- –

**6. Pre-inspection work**

- Check that the battery voltage is in the normal range.

**7. After-inspection work**

- Clear all past DTCs.
- Check that no DTC is stored after test drive.

**8. Estimated failure factors**

- Neutral switch failure (stuck ON or faulty contact)
- Harness disconnection or short-circuit
- Harness/connector faulty contact or improper fit
- CAN communication blackout
- Transmission ECU (TRANS) failure
- When using lockup contact function during PTO of Allison® 2000 or 2500 series
  - There is an independent function that contacts lockup in N range during PTO work.

## P073D: Transmission information (automatic transmission) - rationality

INFORMATION [TRANS model]

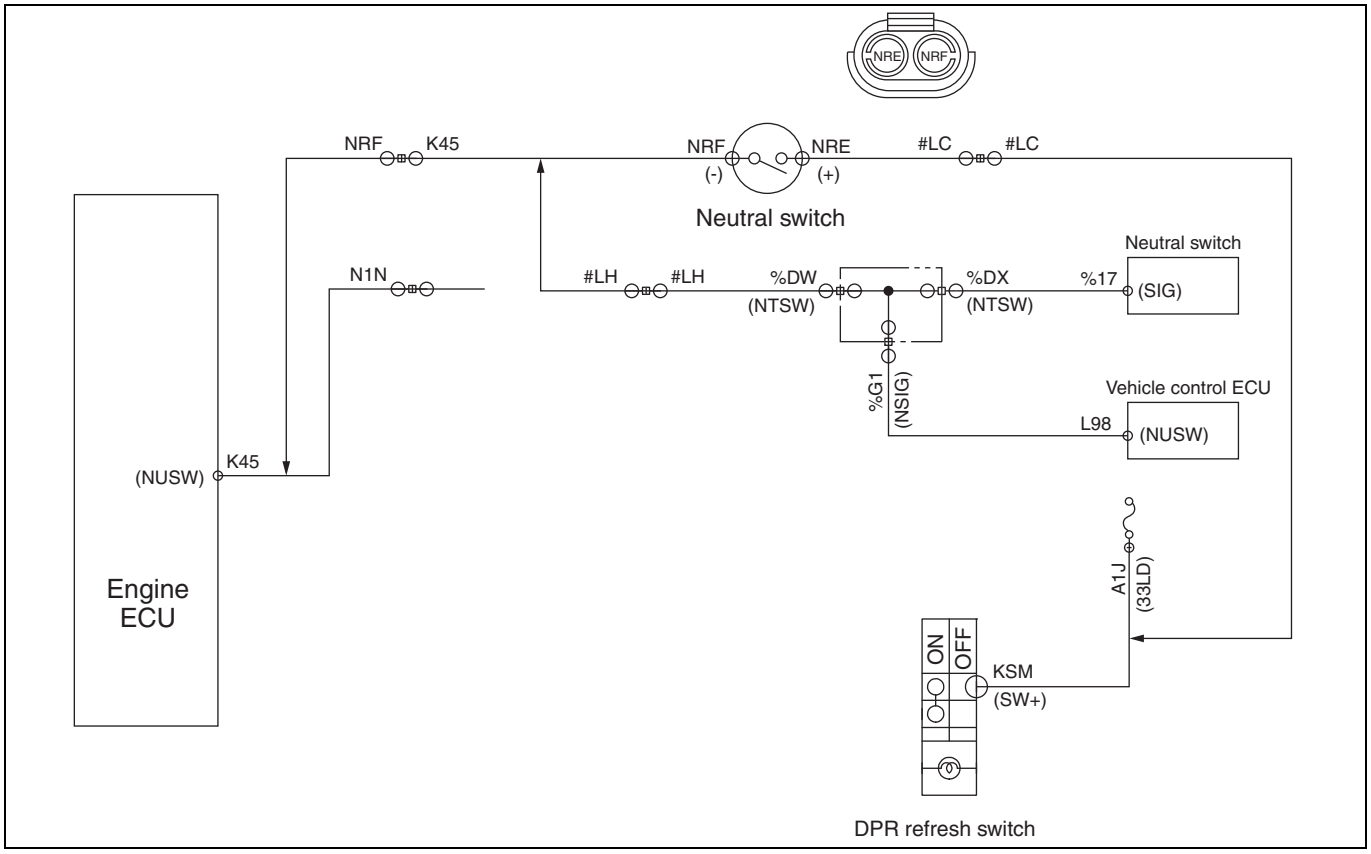


SAPH16F010300637

**1. Technical description**

- Transmission information is transferred through CAN communication.

**<Description of malfunction>**

- Information sent from the transmission ECU is incorrect.

**2. DTC set condition**

(1) DTC detection condition

- Battery voltage is in the range of 10 V to 16 V.
- No other diagnosis codes are present (the monitor disable DTC table can be referred to).
- Compare the parameters listed below.
  - Neutral information
  - Drive engagement information
- Not in PTO mode.

(2) Judgment criteria

**P073D (incorrect transmission information) is detected under the conditions described below. (Numbers (1) and (2) represent the order of priority.)**

1. Drive engagement information is incorrect.
2. While drive engagement information is sensed, neutral status is sensed as neutral information for continuous 10 seconds.

**3. Reset condition**

- Immediately after normal operation is restored.

**4. Indication, warning or system control regulation when the DTC is set.**

- MIL: ON
- SVS light: OFF

**5. Symptoms on the vehicle when the DTC is set**

**<Symptoms on the vehicle due to backup control (fail safe function)>**

- –

**<Symptoms on the vehicle due to malfunction>**

- –

**6. Pre-inspection work**

- Check that the battery voltage is in the normal range.

**7. After-inspection work**

- Clear all past DTCs.
- Check that no DTC is detected after test drive.

**8. Estimated failure factors**

- CAN communication blackout
- Malfunction of TRANS-ECU
- Harness disconnection or short-circuit
- Harness/connector faulty contact or improper fit

## INSPECTION PROCEDURE: P073D

| 1 | Check the DTC detected (Engine ECU) [HINO DX II ] |
|---|---|

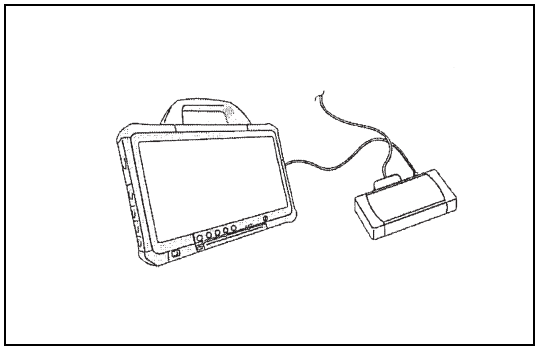

SAPH16F010300638

1. Connect the vehicle to HINO DX II .
2. Set the starter switch to the "ON" position.
3. Select [Engine] and check if no DTC other than P073D (CAN communication failure, etc.) is detected.

**Has a DTC other than P073D been detected?**

**YES**

**Go to the diagnostic procedure of a related DTC.**

**NO**

**Go to step 2.**

| 2 | Inspect the neutral switch [HINO DX II ] |
|---|---|

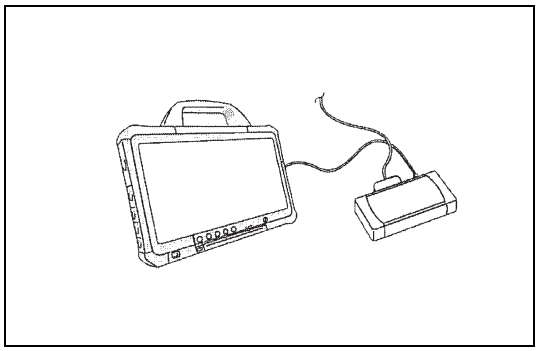

SAPH16F010300639

1. Select [Data monitor Setting] and read the data output from [Neutral switch] when the shift lever is in N range and when it is in other ranges besides N range.

| Measurement conditions | Standard values |
|---|---|
| Starter switch: ON | Shift lever in N range: 1<br>Shift lever in other range: 0 |

**Do the measurements meet the standard value?**

**YES**

**Go to step 3.**

**NO**

**Perform a failure diagnosis of the transmission ECU.**
**Perform "After-inspection work" of INFORMATION section.**

| 3 | Check the neutral switch signal |
|---|---|

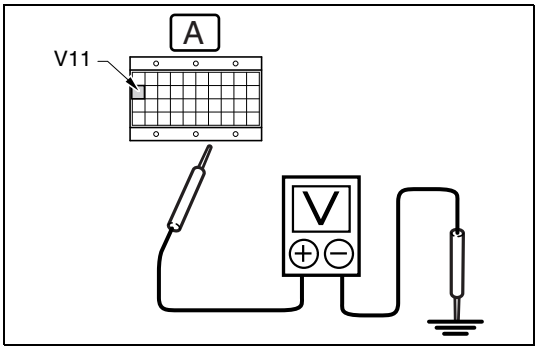


SAPH16F010300640

1. Set the starter switch to the "LOCK" position.
2. Connect the signal check harness to the engine ECU.
3. Set the starter switch to the "ON" position.
4. Use the electrical tester to measure the voltage between the NUSW (V11) terminal in the engine ECU (signal check harness) and ground.

| Measurement conditions | Tester connections | Standard values |
|---|---|---|
| **Starter switch: LOCK** | **Engine ECU (signal check harness) NUSW(V11) – Ground** | **Shift lever in N range: ≥ 10 V Shift lever in other range: 0 V** |

**Do the measurements meet the standard value?**

**YES**

**Replace the engine ECU.**
**Perform "After-inspection work" of INFORMATION section.**

**NO**

**Inspect the neutral switch circuit.**
**Perform "After-inspection work" of INFORMATION section.**

# DTC: P081A

EN01H16F01030F03001115

## P081A: Starter Disable Circuit Low

INFORMATION

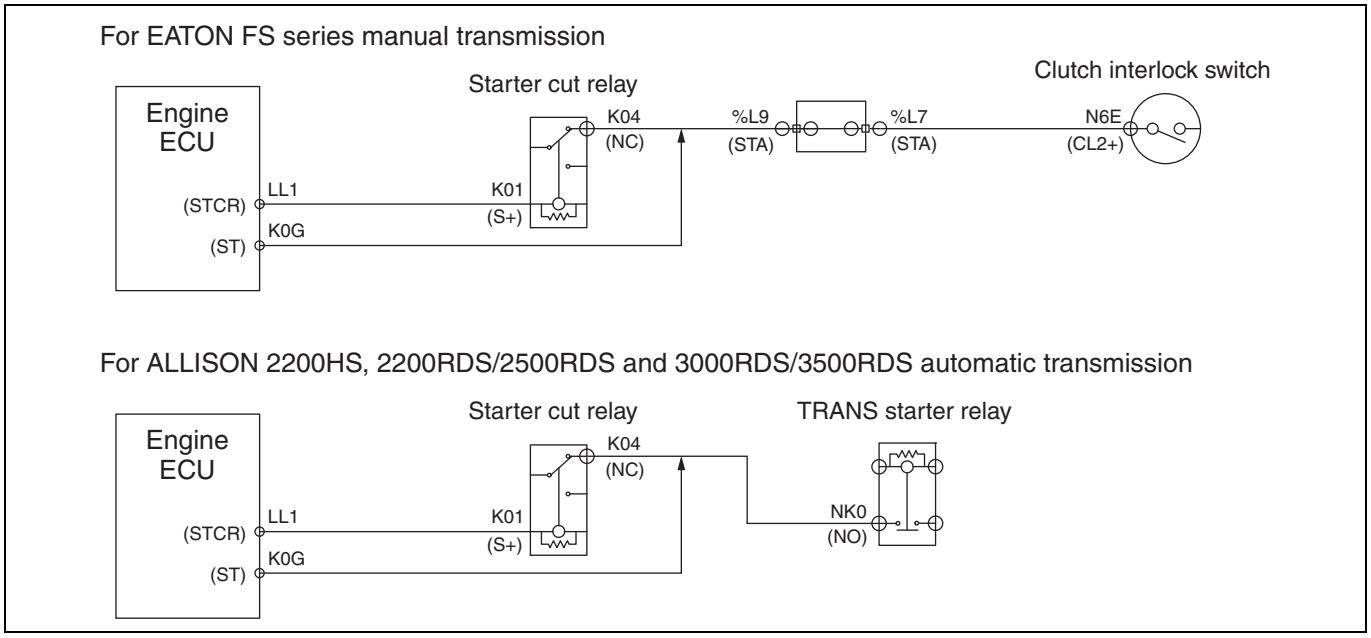


SAPH16F010300641

**1. Technical description**

- The starter cut relay prevents further rotations of the starter when the starter switch is turned after start of the engine.

**<Description of malfunction>**

- Harness GND short-circuit or disconnection and relay unit failure are detected.

**2. DTC set condition**

(1) Check conditions

- Engine speed of 500 r/min or more. (Request starter cut relay operation)
- Starter switch ON.
- Battery voltage is in the range of 10 V to 16 V.

The conditions described above remain for 5 seconds or longer.

(2) Judgment criteria

- Output of the starter cut relay remains at 10 V or less for 3 seconds or longer.

**3. Reset condition**

- Just after restoration to normal condition.

**4. Indication, warning or system control regulation when the DTC is set.**

- MIL: OFF
- SVS light: OFF

**5. Symptoms on the vehicle when the DTC is set**

**<Symptoms on the vehicle due to backup control (fail safe function)>**

- –

**<Symptoms on the vehicle due to malfunction>**

- Starter operates even when the engine is running.

**6. Pre-inspection work**

- Check that the battery voltage is in the normal range.

**7. After-inspection work**

- Clear all past DTCs.
- Check that no DTC is stored after test drive.

**8. Estimated failure factors**

- Harness disconnection or short-circuit
- Looseness or poor contact of connector
- starter cut relay failure
- Engine ECU failure

## INSPECTION PROCEDURE: P081A

| 1 | Check the DTC detected (Engine ECU) [HINO DX II ] |
|---|---|

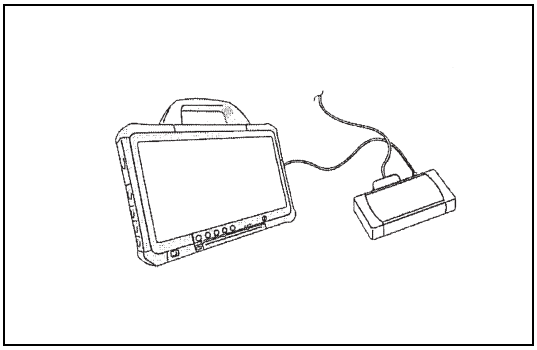

SAPH16F010300642

1. Set the starter switch to the "LOCK" position.
2. Disconnect the starter cut relay.
3. Set the starter switch to the "ON" position.
4. Select [Engine] and check if P081A has been detected.

**Has DTC P081A been detected?**

**YES**

**Go to step 2.**

**NO**

**Replace the starter cut relay.**
**Perform "After-inspection work" of INFORMATION section.**

| 2 | Inspect the starter cut relay connector |
|---|---|

1. Check the connection of the starter cut relay connector (Looseness and poor contact).

**Was any failure found?**

**YES**

**Connect securely, repair if needed.**
**Perform "After-inspection work" of INFORMATION section.**

**NO**

**Go to step 3.**

## 3 Inspect for disconnection in wire harness of starter cut relay

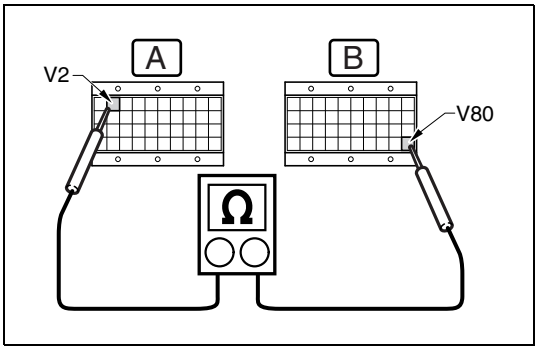


SAPH16F010300643

1. Set the starter switch to the "LOCK" position.
2. Connect the signal check harness to the engine ECU.
3. Set the starter switch to the "ON" position.
4. Use the electrical tester to measure the resistance between the terminals of the engine ECU (signal check harness).

| Measurement conditions | Tester connections | Standard values |
|---|---|---|
| **Starter switch: ON** | **Engine ECU (signal check harness) STCR(V2) – PGD4(V80)** | **∞ Ω** |

**Do the measurements meet the standard value?**

**YES**

**Go to step 4.**

**NO**

**Repair or replace the harness.**
**Perform "After-inspection work" of INFORMATION section.**

## 4 Check the DTC detected (Engine ECU) [HINO DX II ]

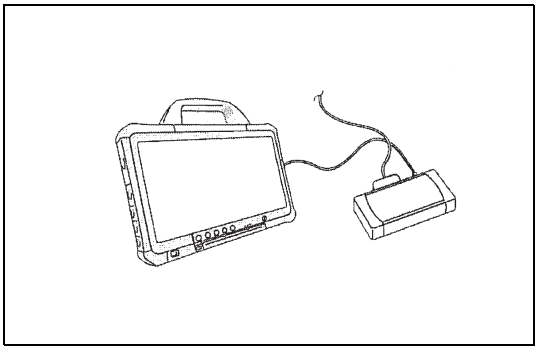

SAPH16F010300644

1. Set the starter switch to the "ON" position.
2. Select [Engine] and check if P081A has been detected.

**Has DTC P081A been detected?**

**YES**

**Replace the engine ECU.**
**Perform "After-inspection work" of INFORMATION section.**

**NO**

**Procedure completed.**
**Perform "After-inspection work" of INFORMATION section.**

# DTC: P081B

EN01H16F01030F03001116

## P081B: Starter Disable Circuit High

INFORMATION

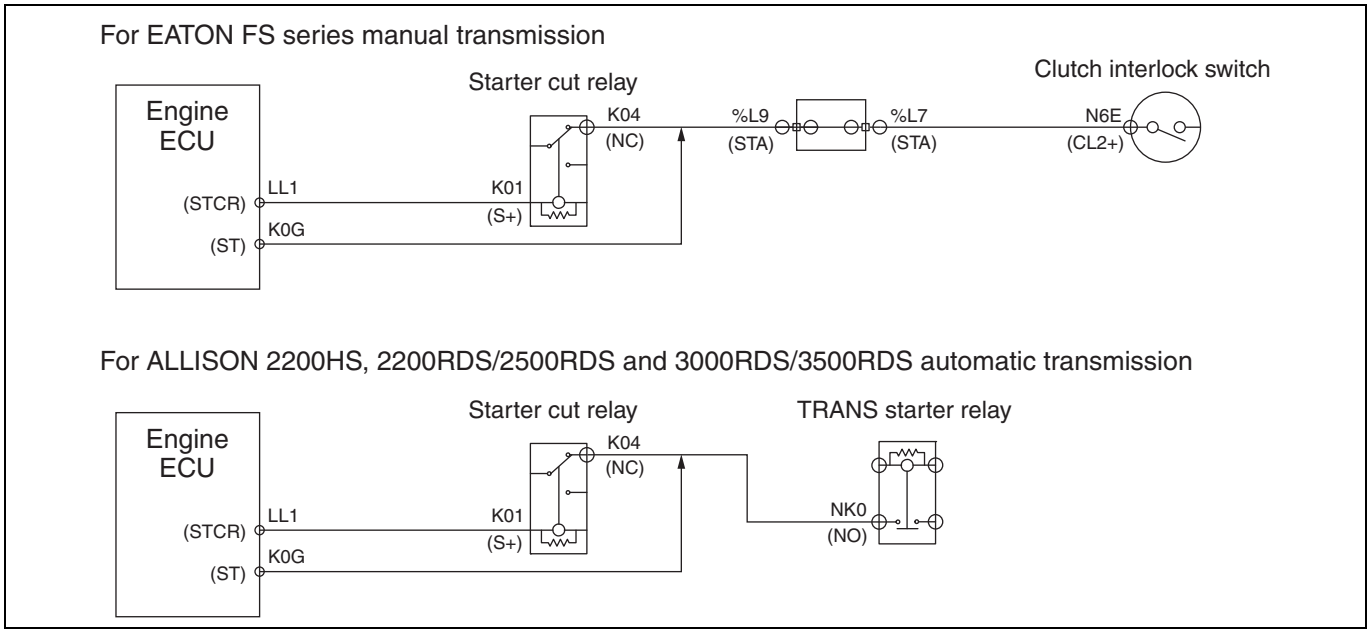


SAPH16F010300645

**1. Technical description**

- The starter cut relay prevents further rotations of the starter when the starter switch is turned after start of the engine.

**<Description of malfunction>**

- Harness +B short-circuit is detected.

**2. DTC set condition**

(1) DTC detection condition

- Request for deactivation of starter block is in progress (while engine is stopped).
- Starter switch ON.
- Battery voltage is 10 V – 16 V.

Above conditions continue for at least 5 seconds.

(2) Judgment criteria

- Output of the starter cut relay remains at 10 V or more for 3 seconds or longer.

**3. Reset condition**

- After restoration to normal condition.

**4. Indication, warning or system control regulation when the DTC is set.**

- MIL: OFF
- SVS light: OFF

**5. Symptoms on the vehicle when the DTC is set**

**<Symptoms on the vehicle due to backup control (fail safe function)>**

- –

**<Symptoms on the vehicle due to malfunction>**

- Starter may not turn over. (If the starter turns over it will not interfere with engine operation.)

**6. Pre-inspection work**

- Check that the battery voltage is in the normal range.

**7. After-inspection work**

- Clear all past DTCs.
- Check that no DTC is stored after test drive.

**8. Estimated failure factors**

- Harness disconnection or short-circuit
- Looseness or poor contact of connector
- Starter cut relay failure
- Engine ECU failure

## INSPECTION PROCEDURE: P081B

| 1 | Inspect the starter cut relay connector |
|---|---|

1. Check the connection of the starter cut relay connector (Looseness and poor contact).

**Was any failure found?**

**YES**

**Connect securely, repair if needed.**
**Perform "After-inspection work" of INFORMATION section.**

**NO**

**Go to step 2.**

| 2 | Inspect for disconnection in wire harness of starter cut relay |
|---|---|

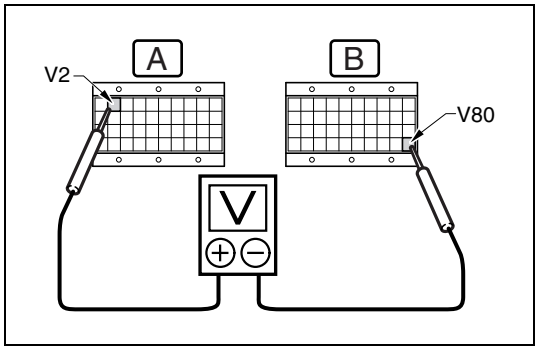


SAPH16F010300646

1. Set the starter switch to the "LOCK" position.
2. Connect the signal check harness to the engine ECU.
3. Set the starter switch to the "ON" position.
4. Use the electrical tester to measure the resistance between the terminals of the engine ECU (signal check harness).

| Measurement conditions | Tester connections | Standard values |
|---|---|---|
| Starter switch: ON | Engine ECU (signal check harness) STCR(V2) – PGD4(V80) | 3 V or less |

**Do the measurements meet the standard value?**

**YES**

**Go to step 3.**

**NO**

**Repair or replace the harness.**
**Perform "After-inspection work" of INFORMATION section.**

| 3 | Check the DTC detected (Engine ECU) [HINO DX II ] |
|---|---|

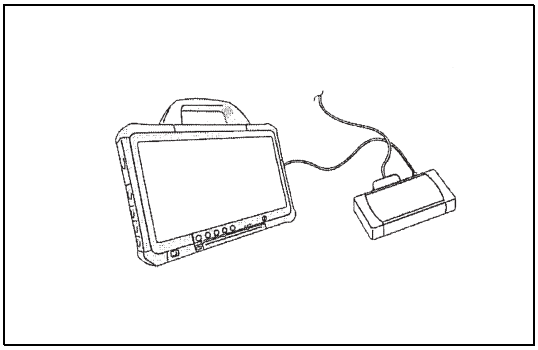

SAPH16F010300647

1. Set the starter switch to the "ON" position.
2. Select [Engine] and check if P081B has been detected.

**Has DTC P081B been detected?**

**YES**

**Replace the engine ECU.**
**Perform "After-inspection work" of INFORMATION section.**

**NO**

**Procedure completed.**
**Perform "After-inspection work" of INFORMATION section.**

# DTC: P0850

EN01H16F01030F03001117

## P850: Neutral switch - rationality

INFORMATION

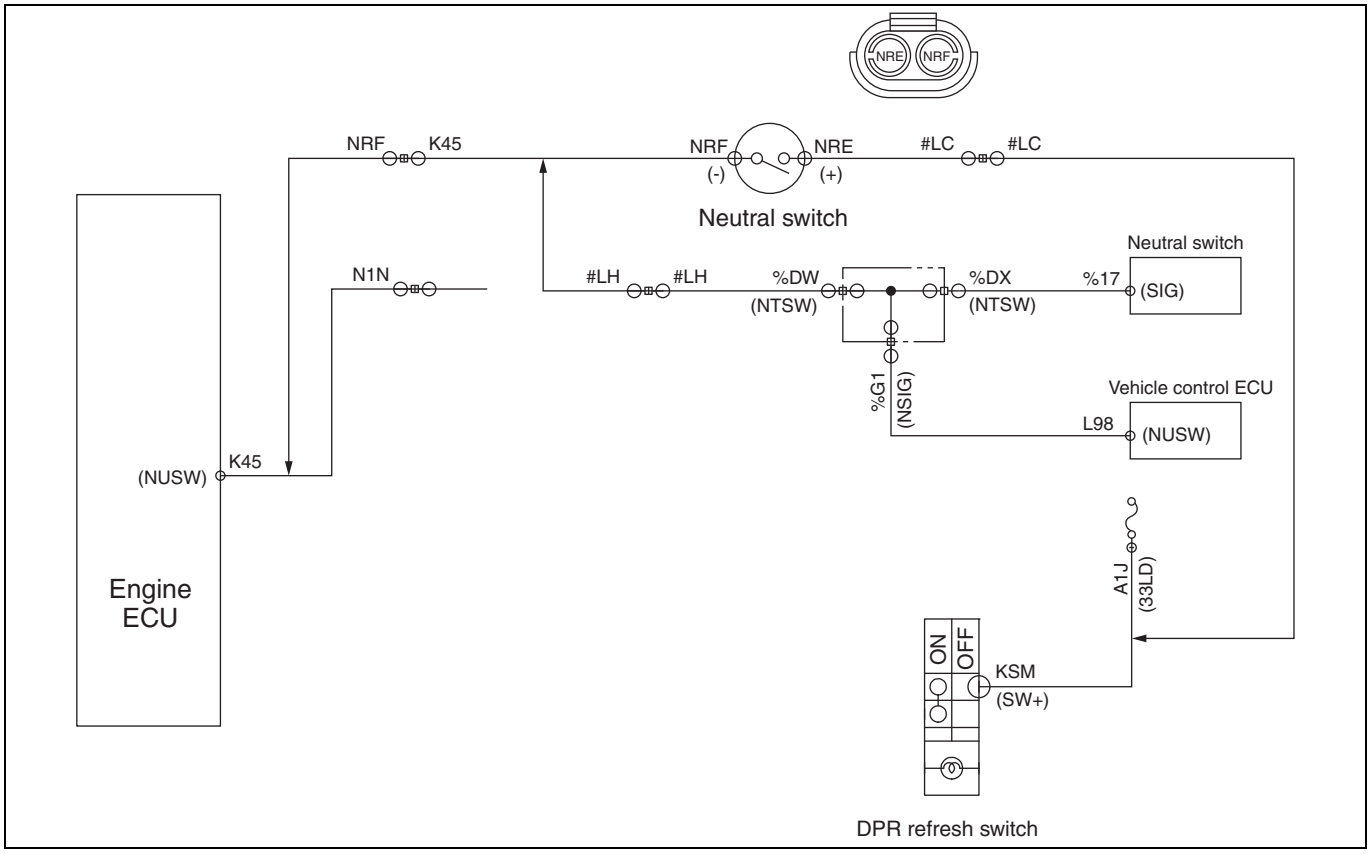


SAPH16F010300648

**1. Technical description**

- Through the neutral switch, the ECU senses neutral signals when the transmission lever is in the P or N range.

**<Description of malfunction>**

- The neutral switch cannot correctly sense.

**2. DTC set condition**

(1) Check conditions

**After the starter switch is set to ON position, the status described below remains for 10 seconds.**

- Vehicle speed is 31.25 miles/h or higher.
- Battery voltage is in the range of 10 V to 16 V.
- After that, vehicle speed is 0 miles/h.

(2) Judgment criteria

- The neutral switch cannot be switched twice.

**3. Reset condition**

- Immediately after normal operation is restored.

**4. Indication, warning or system control regulation when the DTC is set.**

- MIL: ON
- SVS light: OFF
- Cruise control is not available.

**5. Symptoms on the vehicle when the DTC is set**

**<Symptoms on the vehicle due to backup control (fail safe function)>**

- Cruise control does not work.

**<Symptoms on the vehicle due to malfunction>**

- –

**6. Pre-inspection work**

- Check that the battery voltage is in the normal range.

**7. After-inspection work**

- Clear all past DTCs.
- Check that no DTC is stored after test drive.

**8. Estimated failure factors**

- Harness disconnection or short-circuit
- Malfunction of neutral switch
- Malfunction of ECU

## INSPECTION PROCEDURE: P0850

**1 Inspect the neutral switch**

1. Check if the neutral switch is properly adjusted.

**Was any failure found?**

**YES**

**Adjust the neutral switch.**
**Perform "After-inspection work" of INFORMATION section.**

**NO**

**Go to step 2.**

**2 Inspect the neutral switch connector**

1. Check the connection of the neutral switch connector (Looseness and poor contact).

**Was any failure found?**

**YES**

**Connect securely, repair if needed.**
**Perform "After-inspection work" of INFORMATION section.**

**NO**

**Go to step 3.**

**3 Inspect the neutral switch unit**

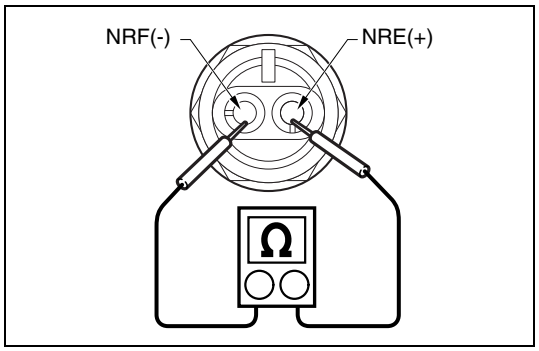


SAPH16F010300649

1. Set the starter switch to the "LOCK" position.
2. Disconnect the neutral switch connector.
3. Use the electrical tester to measure the resistance between the terminals of the neutral switch.

| Measurement conditions | Tester connections | Standard values |
|---|---|---|
| **Starter switch: LOCK** | **Neutral switch NRE – NRF** | **Shift lever in N position: < 1 Ω Shift lever in any other position: ∞ Ω** |

**Do the measurements meet the standard value?**

| YES | NO |
|---|---|
| **Go to step 4.** | **Replace the neutral switch. Perform "After-inspection work" of INFORMATION section.** |

| 4 | Inspect the power supply of the neutral switch |
|---|---|

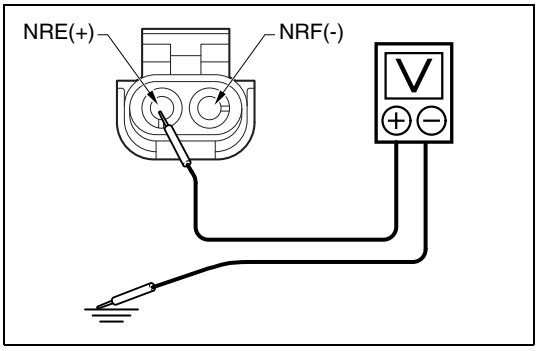


SAPH16F010300650

1. Set the starter switch to the "ON" position.
2. Use the electrical tester to measure the voltage between the NRE terminal in the neutral switch vehicle-side connector and ground.

| Measurement conditions | Tester connections | Standard values |
|---|---|---|
| Starter switch: ON | Neutral switch vehicle-side connector<br>NRE – Ground | More than 10 V |

**Do the measurements meet the standard value?**

| YES | NO |
|---|---|
| **Go to step 5.** | **Repair the neutral switch power circuit. Perform "After-inspection work" of INFORMATION section.** |

| 5 | Inspect the neutral switch harness |
|---|---|

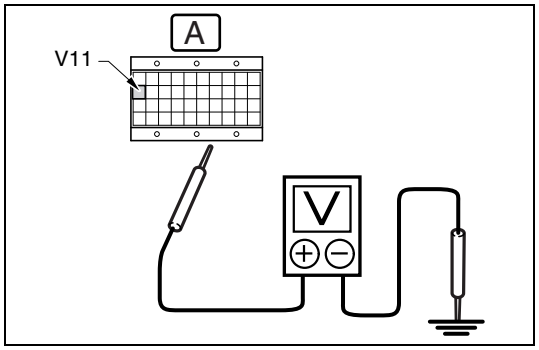


SAPH16F010300651

1. Set the starter switch to the "LOCK" position.
2. Connect the neutral switch connector.
3. Connect the signal check harness to the engine ECU vehicle-side harness. (Do not connect the harness to the ECU.)
4. Set the starter switch to the "ON" position.
5. Use the electrical tester to measure the voltage between the terminals of the engine ECU (signal check harness) and ground.

| Measurement conditions | Tester connections | Standard values |
|---|---|---|
| **Starter switch: ON** | **Engine ECU (signal check harness) NUSW(V11) – Ground** | **Shift lever in N position: ≥ 10 V Shift lever in any other position: ≤ 0.5 V** |

**Do the measurements meet the standard value?**

**YES**

**Replace the engine ECU.**
**Perform "After-inspection work" of INFORMATION section.**

**NO**

**Repair or replace the harness.**
**Perform "After-inspection work" of INFORMATION section.**

**Hino Motors Sales U.S.A., Inc.**
**41180 Bridge Street, Novi, MI 48375**
**Telephone: (248) 699-9300**
**PRINTED IN JAPAN**

**Pub.No. S7-UNAE14A 1/3 '16. 10**

H1-A038E01.book　i ページ　２０１６年１０月１９日　水曜日　午後５時２６分

# THANK YOU VERY MUCH FOR PURCHASING A HINO VEHICLE

Please carefully and thoroughly read and follow the information in this Driver's/Owner's Manual.

It contains many practical tips about the vehicle's operation and procedures to use for daily and periodic maintenance. The manual will help you become more familiar with your vehicle and avoid situations that could be dangerous to you and to others. If you have any questions about your vehicle please contact your Hino dealer.

## Important Symbols and Signs

| | |
|---|---|
| ⚠ DANGER | **"DANGER" as used in this manual indicates a hazardous situation which, if not avoided, will result in death or serious injury.** |
| ⚠ WARNING | **"WARNING" as used in this manual indicates a potentially hazardous situation which, if not avoided, could result in death or serious injury.** |
| ⚠ CAUTION | **"CAUTION" with the safety alert symbol as used in this manual indicates a hazardous situation which, if not avoided, could result in minor or moderate injury.** |
| NOTICE | **"NOTICE" as used in this manual addresses practices and situations which could result in vehicle damage if ignored.** |
| HINT | **"HINT" as used in this manual is something you should have a knowledge of since it could be very useful to you.** |

H1-A038E01.book ii ページ ２０１６年１０月１９日 水曜日 午後５時２６分

## ABOUT THIS MANUAL

- **This Manual applies to all 2018 model year Hino trucks, and describes the vehicles without identification as optional equipment or model version. Some of the described equipment may not be installed on your vehicle or may be available only in certain locations.**
- **Please consult your purchase documents regarding the equipment and options on your vehicle and consult your Hino dealer for more information.**
- **Before operating your vehicle, you should check the engine model and the accessories, and read about the appropriate equipment in this Manual. If you need to determine your engine model, you should review page 1-2, "Vehicle Identification Number" in SECTION 1, General Instructions.**
- **An alphabetical index can be found at the end of this Manual.**
- **Illustrations are only to familiarize you with your vehicle and are used to explain the descriptions in the text of the Manual.**
- **Keep this Manual in this vehicle, so it will be there if it is needed while you are on the road.**
- **If the vehicle is sold or loaned, this Manual should be given to the next owner or borrower, who will need the information contained in it.**
- **All information and specifications in this manual are based upon the latest product information available as of the editorial deadline.**
- **Hino Motors, Ltd. reserves the right to make changes at any time without prior notice.**
- **Read the entire manual before using vehicle.**

| ⚠ WARNING |
| --- |
| **Any modification of the vehicle or engine can adversely affect the performance, safety and reliability of the vehicle resulting in death or serious injury in an accident and invalid the warranty of the vehicle. Also, the modification could result in the breach of governmental regulations.** |

# Service Assistance

If you have any questions or concerns about your Hino vehicle, you should contact your Hino Dealer. Hino Dealer Service Departments have the necessary tools, equipment and parts needed for proper maintenance and repair. If your questions are not answered or concerns not resolved by the Dealer Service Department, you should contact the Hino National Service Manager at the following addresses:

**(1) For U.S. DRIVERS / OWNERS**

Hino Motors Sales U.S.A., Inc. (HMS)

Phone (248) 699-9300

41180 Bridge Street, Novi, MI 48375

**(2) For CANADIAN DRIVERS / OWNERS**

Hino Motors Canada, Ltd. (HMC)

Phone (905) 670-3352

6975 Creditview Road Unit, #2, Mississauga, Ontario, L5N 8E9

**If you contact HMS or HMC, be sure to provide the following information.**

- **Name, address, email address and telephone number of the purchaser.**
- **Vehicle model year and vehicle identification number (VIN).**
- **Vehicle delivery date and current mileage.**
- **Location where the vehicle was purchased.**
- **Details of the problem.**

**Every vehicle has a unique Vehicle Identification Number (VIN) and it is important to record the VIN in this Manual in the space provided below. The VIN is required to obtain information pertinent to this vehicle. See page 1-2 to find the location of the VIN. Page 1-3 explains the coding of the VIN.**

| | |
|---|---|
| **VIN** | |

H1-A038E01.book　iv ページ　２０１６年１０月１９日　水曜日　午後５時２６分

## Clean Engine Idle Certification Label for California

Make sure that the Clean Engine Idle Certification Label, shown below, is affixed to the outside of the left door.

In accordance with California Air Resources Board (CARB) regulations*, a Clean Engine Idle Certification Label is required to be affixed on the outside of the driver's door to show that the new vehicle is equipped with a diesel engine manufactured since January 2008.

§ 1956.8. Exhaust Emissions Standards and Test Procedures - 1985 and Subsequent Model Heavy-Duty Engines and Vehicles. (a) (b) Heavy-Duty Diesel Engine Idling Requirements

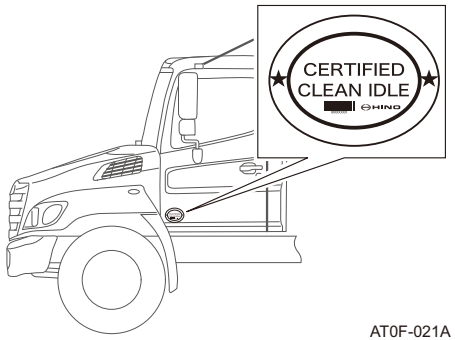


AT0F-021A

## CALIFORNIA Proposition 65 Warning

Diesel engine exhaust and some of its constituents are known to the State of California to cause cancer, birth defects, and other reproductive harm.

Foreword_02.fm v ページ ２０１６年１０月２８日 金曜日 午後５時５８分

## Maintenance Instruction

**IMPORTANT:**

The tires fitted to this vehicle are certified by US heavy-duty vehicle greenhouse gas (GHG) and fuel efficiency regulations for the CO2 emissions in accordance with the tire rolling resistance performance. Therefore, if the tire replacement is necessary, replacement tires must meet or exceed the rolling resistance of the originally installed tires in order to maintain compliance with the regulatory CO2 emission standard. Contact your tire manufacturer/supplier to determine the rolling resistance of the originally installed tires.

## Warning and Caution Labels

Warning and caution labels provide important information. Be sure to read them before operating the vehicle. If any label becomes difficult to read, has peeled off of the vehicle, is scratched or otherwise damaged, please inform a Hino dealer and new labels will be provided. The labels are located in the cab and around various vehicle components as shown on this pages and the following pages. Regarding the labels applied to the rear body on the vehicle, please read the manual supplied by the body builder.

## SAFETY LABELS

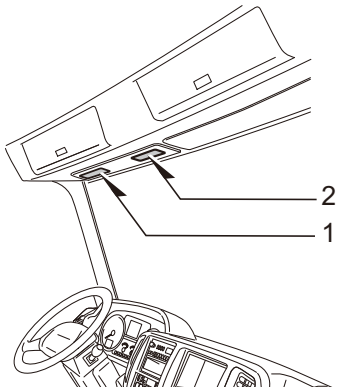


or (2) Automatic transmission (The contents differ depending on vehicle model)
Allison® 2500HS and 2500RDS

AUTOMATIC TRANSMISSION
OPERATING INFORMATION

1. ENGINE START
PUT SELECTOR LEVER IN "N". DO NOT START ENINE BY PUSHING OR TOWING THE VEHICLE.
2. RANGE SELECTOR CONTROL

| SELECTOR POSITION | OPERATING CONDITION |
|---|---|
| R | REVERSE (COMPLETELY STOP THE VEHICLE BEFORE SHIFTING.) |
| N | NEUTRAL (PARKING AND ENGINE STARTING) |
| OD | NORMAL FORWARD DRIVING |
| D | ADDITIONAL ENGINE BRAKING |
| 2 | LOW SPEED OPERATING AND GREATER ENGINE BRAKING |
| 1 | EXTRA HEAVY LOADS-MAXIMUM ENGINE BRAKING |

3. PARKING
APPLY PARKING BRAKE FIRMLY AND PLACE THE SELECTOR INTO "N" POSITION, IN CASE OF PARKING THE VEHICLE ON A SLOPE OR OFF THE ROAD, BLOCK THE WHEELS IN ADDITION TO THE ABOVE.
DO NOT APPLY PARKING BRAKE WHEN THE VEHICLE IS MOVING OTHERWISE THE TRANSMISSION COULD BE SEVERELY DAMAGED.
4. TOWING
BEFORE TOWING A DISABLED VEHICLE, REMOVE THE AXLE SHAFTS OR TOW WITH REAR WHEELS SUSPENDED.

76566-6000

UTILISATION DE LA BOÎTE DE
VITESSES AUTOMATIQUE

1. DÉMARRAGE DU MOTEUR
METTRE LE LEVIER DE VITESSES AU POINT MORT "N" NE PAS DÉMARRAGE LE MOTEUR EN POUSSANT OU EN REMORQUANT LE VÉHICULE
2. GRILLE DU LEVIER DE VITESSES

| POSITION | UTILISATION |
|---|---|
| R | MARCHE ARRIERE (LE VÉHICULE DOIT ÊTRE COMPLÈTEMENT ARRÊTÉ AVANT DE PASSER EN MARCHE ARRIERE) |
| N | POINT MORT (STATIONNEMENT ET DEMARRAE DU MOTEUR) |
| OD | POUR LA CONDUITE NORMALE |
| D | FREIN MOTEUR SUPPLÉMENTAIRE |
| 2 | POUR LA CONDUITE A VITESSES LENTES ET MEILLEUR FREIN MOTEUR |
| 1 | POUR LA CONDUITE LORSQUE LA CHARGE EST EXTRÊMEMENT LOURDE ET POUR OBTENIR UN FREIN MOTEUR MAXIMUM |

3. STATIONNEMENT
SERRER FERMEMENT LE FREIN DE STATIONNEMENT, PUIS METTRE LE LEVIER DE VITESSES AU POINT MORT "N" SI LE VÉHICULE EST STATIONNÉ DANS UNE PENTE ABRUPTE OU HORS ROUTE, CAIER AUSSI LES ROUES.
N'APPLIQUEZ PAS LE FREIN DE STATIONNEMENT LORSQUE LE CAMION ROULE CAR LA TRANSMISSION PEUT ÊTRE SÉVÈREMENT ENDOMMAGÉE.
4. REMORQUAGE
AVANT DE REMORQUER UN VÉHICULE EN PANNE, DÉPOSER LES ARBRES DE ROUE OU BIEN REMORQUER LE VÉHICULE AVEC SES ROUES ARRIÈRE LEVÉES DU SOL.

1. (1) Automatic transmission (The contents differ depending on vehicle model)
Allison® 2200HS and 2200RDS

AUTOMATIC TRANSMISSION
OPERATING INFORMATION

1. ENGINE START
PUT SELECTOR LEVER IN "P". DO NOT START ENGINE BY PUSHING OR TOWING THE VEHICLE.
2. RANGE SELECTOR CONTROL

| SELECTOR POSITION | OPERATING CONDITION |
|---|---|
| P | PARKING AND ENGINE STARTING |
| R | REVERSE (COMPLETELY STOP THE VEHICLE BEFORE SHIFTING.) |
| N | NEUTRAL (ENGINE STARTING) |
| OD | NORMAL FORWARD DRIVING |
| D | ADDITIONAL ENGINE BRAKING |
| 2 | LOW SPEED OPERATION AND GREATER ENGINE BRAKING |
| 1 | EXTRA HEAVY LOADS-MAXIMUM ENGINE BRAKING |

3. PARKING
APPLY PARKING BRAKE FIRMLY AND PLACE THE SELECTOR INTO "P" POSITION, IN CASE OF PARKING THE VEHICLE ON A SLOPE OR OFF THE ROAD, BLOCK THE WHEELS IN ADDITION TO THE ABOVE.
DO NOT APPLY PARKING BRAKE WHEN THE VEHICLE IS MOVING OTHERWISE THE TRANSMISSION COULD BE SEVERELY DAMAGED.
4. TOWING
BEFORE TOWING A DISABLED VEHICLE, REMOVE THE AXLE SHAFTS OR TOW WITH REAR WHEELS SUSPENDED.

UTILISATION DE LA BOÎTE DE
VITESSES AUTOMATIQUE

1. DÉMARRAGE DU MOTEUR
METTRE LE LEVIER DE VITESSES AU POINT MORT "P". NE PAS DÉMARRER LE MOTEUR EN POUSSANT OU EN REMORQUANT LE VÉHICULE.
2. GRILLE DU LEVIER DE VITESSES

| POSITION | UTILISATION |
|---|---|
| P | STATIONNEMENT ET DÉMARRAGE DU MOTEUR |
| R | MARCHE ARRIÈRE (LE VÉHICULE DOIT ÊTRE COMPLÈTEMENT ARRÊTÉ AVANT DE PASSER EN MARCHE ARRIÈRE) |
| N | POINT MORT (DÉMARRAGE DU MOTEUR) |
| OD | POUR LA CONDUITE NORMALE |
| D | FREIN MOTEUR SUPPLÉMENTAIRE |
| 2 | POUR LA CONDUITE À VITESSES LENTES ET MEILLEUR FREIN MOTEUR |
| 1 | POUR LA CONDUITE LORSQUE LA CHARGE EST EXTRÊMEMENT LOURDE ET POUR OBTENIR UN FREIN MOTEUR MAXIMUM |

3. STATIONNEMENT
SERRER FERMEMENT LE FREIN DE STATIONNEMENT, PUIS METTRE LE LEVIER DE VITESSES AU POINT MORT "P" SI LE VÉHICULE EST STATIONNÉ DANS UNE PENTE ABRUPTE OU HORS ROUTE, CALER AUSSI LES ROUES.
N' APPLIQUEZ PAS LE FREIN DE STATIONNEMENT LORSQUE LE CAMION ROULE CAR LA TRANSMISSION PEUT ÊTRE SÉVÈREMENT ENDOMMAGÉE.
4. REMORQUAGE
AVANT DE REMORQUER UN VÉHICULE EN PANNE, DÉPOSER LES ARBRES DE ROUE OU BIEN REMORQUER LE VÉHICULE AVEC SES ROUES ARRIÈRE LEVÉES DU SOL.

or (3) Automatic transmission (The contents differ depending on vehicle model)
Allison® 3000RDS and 3500RDS

AUTOMATIC TRANSMISSION
OPERATING INFORMATION

1. ENGINE START
SELECT "N" ON THE SHIFT CONTROL, AND SET THE PARKING BRAKES.
2. RANGE SELECTOR CONTROL

| SELECTOR POSITION | OPERATING CONDITION |
|---|---|
| R | REVERSE (COMPLETELY STOP THE VEHICLE BEFORE SHIFTING.) |
| N | NEUTRAL (PARKING AND ENGINE STARTING) |
| D | NORMAL FORWARD DRIVING |
| ▲/◆ | USED TO CHANGE THE UPPER LIMIT OF AUTOMATIC SHIFT. |

3. PARKING
APPLY PARKING BRAKE FIRMLY AND PLACE THE SELECTOR INTO "N" POSITION, IN CASE OF PARKING THE VEHICLE ON A SLOPE OR OFF THE ROAD, BLOCK THE WHEELS IN ADDITION TO THE ABOVE.
DO NOT APPLY PARKING BRAKE WHEN THE VEHICLE IS MOVING OTHERWISE THE TRANSMISSION COULD BE SEVERELY DAMAGED.
4. TOWING
BEFORE TOWING A DISABLED VEHICLE, REMOVE THE AXLE SHAFTS OR TOW WITH REAR WHEELS SUSPENDED.

82685-E0J20

UTILISATION DE LA BOÎTE DE
VITESSES AUTOMATIQUE

1. DÉMARRAGE DU MOTEUR
SELECTIONNER "N" (POINT MORT) SUR LA COMMANDE DE CRANGEMENT DE VITESSE ET METTRE LE FREIN DE STATIONNEMENT.
2. GRILLE DU LEVIER DE VITESSES

| POSITION | UTILISATION |
|---|---|
| R | MARCHE ARRIÈRE(LE VÉHICULE DOIT ÊTRE COMPLÈTEMENT ARRÊTÉ AVANT DE PASSER EN MARCHE ARRIERE) |
| N | POINT MORT (STATIONNEMENT ET DÉMARRAGE DU MOTEUR) |
| D | POUR LA CONDDITE NORMALE |
| ▲/◆ | UTILISE LE CHANGER LA LIMITE SUPÉRIEURE DE UTILISATION CHANGER. |

3. STATIONNEMENT
SERRER FERMEMENT LE FREIN DE STATIONNEMENT, PUIS METTRE LE LEVIER DE VITESSES AU POINT MORT "N" SI LE VÉHICULE EST STATIONNÉ DANS UNE PENTE ABRUPTE OU HORS ROUTE, CALER AUSSI LES ROUES.
N' APPLIQUEZ PAS LE FREIN DE STATIONNEMENT LORSQUE LE CAMION ROULE CAR LA TRANSMISSION PEUT ÊTRE SÉVÈREMENT ENDOMMAGÉE.
4. REMORQUAGE
AVANT DE REMORQUER UN VÉHICULE EN PANNE, DÉPOSER LES ARBRES DE ROUE OU BIEN REMORQUER LE VÉHICULE AVEC SES ROUES ARRIÈRE LEVÉES DU SOL.

AT0F-038A

H1-A038E01.book　vii ページ　２０１６年１０月１９日　水曜日　午後５時２６分



2. Differential lock (If so equipped)

| ⚠ WARNING | ⚠ AVERTISSEMENT |
|---|---|
| Warning regarding the differential lock | Avertissement relatif au verrouillage du différentiel |
| **ALWAYS observe the following instruction. Improper operation of the differential lock may cause an accident resulting in death or serious injury due to loss of the control of the vehicle, or damage to the differential gear.**<br>**• Never use the differential lock except on a slippery road where any of the driving wheels are apt to spin.**<br>**• Never turn on or off the differential lock switch while the vehicle is moving, or while the driving wheels are spinning, slipping or losing traction.**<br>**Always turn on or off the differential lock switch while the vehicle is standing still.**<br>**• Never operate the vehicle at more than 25MPH while the differential lock switch is "ON".**<br>**• Never operate the vehicle on a downhill road while the differential lock switch is "ON" as the vehicle may lose control, or a jackknife can result in case of a trailer truck.**<br>**• Carefully operate the vehicle while the differential lock switch is "ON" as the turning radius of the vehicle increases.**<br>S49N4-E0030 | **TOUJOURS bien observer les instructions suivantes. Toute manœuvre inappropriée du verrouillage du différentiel risque de résulter en détérioration des pignons du différentiel ou en accident pouvant entraîner la mort ou des blessures graves du fait d'une perte de contrôle du véhicule.**<br>**• Ne jamais utiliser le verrouillage du différentiel sauf sur route glissante sur laquelle une roue motrice quelconque risque de patiner.**<br>**• Ne jamais mettre la commande du verrouillage du différentiel en ou hors fonction quand le véhicule est en mouvement ou quand les roues motrices patinent, dérapent ou manquent d'adhérence.**<br>**Toujours mettre en ou hors fonction la commande du verrouillage du différentiel quand le véhicule est à l'arrêt.**<br>**• Ne jamais conduire le véhicule à plus de 25 mph quand la commande du verrouillage du différentiel est engagée.**<br>**• Ne jamais conduire le véhicule dans une descente quand la commande du verrouillage du différentiel est engagée sous peine de perte de contrôle ou de mise en portefeuille si le véhicule est attelé à une remorque.**<br>**• Manœuvrer le véhicule avec précaution quand la conducteur du verrouillage du différentiel est en fonction car le rayon de braquage du véhicule augmente.** |

AT0F-028A

## SAFETY LABELS

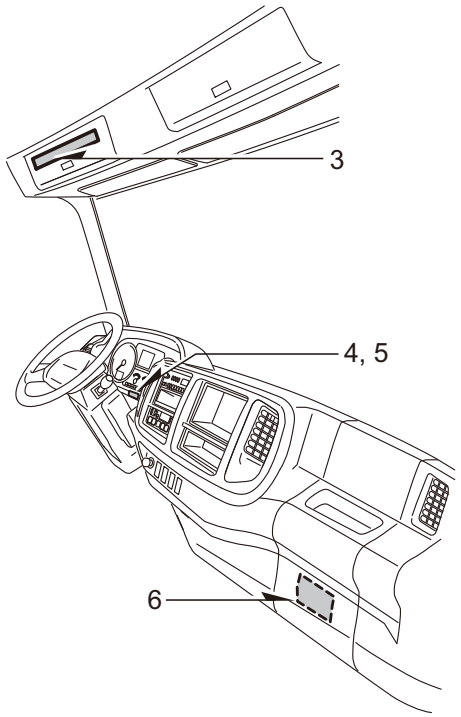


3. Exhaust gas after treatment system (English)

**⚠ WARNING** — **EXHAUST GAS AFTER TREATMENT SYSTEM**

In order to maintain proper function of the exhaust gas aftertreatment system and for your safety, always follow the instructions below when the indicator lights as shown below start to flash and/or light up. Be sure to read the Driver's/Owner's Manual for details.

| DPR (Diesel Particulate active Reduction system) | | | | | DEF (Diesel Exhaust Fluid) SCR SYSTEM | | | | | | | |
|---|---|---|---|---|---|---|---|---|---|---|---|---|
| DPR Manual Regeneration Required | | | DPR Malfunction | | DEF Refill Required | | | Improper DEF | | SCR Malfunction | | |
| (BLINK) | (BLINK) | (SOLID) | (SOLID) | (SOLID) | (SOLID) | (BLINK) | (SOLID) | DEF (SOLID) | (SOLID) | (BLINK) | (SOLID) | |
| Park the vehicle and perform DPR manual regeneration as soon as possible. | Immediately park the vehicle and perform DPR manual regeneration. The DPR Filter is full. Maximum vehicle speed is limited to 55 MPH first, and then further limited to 35 MPH automatically. | | Immediately bring the vehicle to the dealer for repair. The DPR Filter has been clogged up. Maximum vehicle speed is limited to 25 MPH. | | The DEF tank is nearly empty. Refill DEF tank with certified DEF as soon as possible. | Immediately Refill the DEF tank with certified DEF. The DEF tank is almost empty. | | Immediately drain DEF and refill the DEF tank with certified DEF. | | Immediately bring the vehicle to the dealer for repair. | | This turtle symbol light goes on when the engine performance is limited. |

**⚠ WARNING**

Engine exhaust gas temperature is high.
To reduce the risk of fire, always keep any flammable materials such as leaves or vegetation away from the exhaust system prior to initiating DPR Manual regeneration.

In each of the three situations shown above, the maximum engine torque available will be gradually reduced to a value not exceeding 50% of the maximum torque, and the maximum vehicle speed will be limited to 5 MPH.

17792-E0490

3. Exhaust gas after treatment system (French)

**⚠ AVERTISSEMENT** — **SYSTÈME DE POST-TRAITEMENT DES GAZ D'ÉCHAPPEMENT**

Afin de maintenir le bon fonctionnement du système de post-traitement des gaz d'échappement ainsi que pour votre sécurité, suivez toujours les instructions ci-dessous lorsque les indicateurs lumineux indiqués ci-dessous commencent à clignoter et/ou à s'allumer. Veillez à lire le manuel du propriétaire/conducteur pour plus de détails.

| DPR (Système de réduction active des particules de diesel) | | | | | SYSTEME SCR DEF (Fluide d'échappement diesel) | | | | | | | |
|---|---|---|---|---|---|---|---|---|---|---|---|---|
| Régénération manuelle du DPR requise | | | Dysfonctionnement du DPR | | Remplissage de DEF requis | | | DEF incorrect | | Dysfonctionnement du SCR | | |
| (CLIGNOTEMENT) | (CLIGNOTEMENT) | (FIXE) | (FIXE) | (FIXE) | (FIXE) | (CLIGNOTEMENT) | (FIXE) | DEF (FIXE) | (FIXE) | (CLIGNOTEMENT) | (FIXE) | |
| Stationnez le véhicule et effectuez la régénération manuelle du DPR dès que possible. | Stationnez le véhicule immédiatement et effectuez la régénération manuelle du DPR dès que possible. Le filtre du DPR est plein. La vitesse maximale du véhicule est limitée à 55 MPH en premier lieu, puis elle est automatiquement limitée à 35 MPH. | | Conduisez immédiatement le véhicule chez le concessionnaire pour la réparation. Le filtre du DPR est obstrué. La vitesse maximale du véhicule est limitée à 25 MPH. | | Le réservoir de DEF est presque vide. Remplissez le réservoir de DEF avec un DEF certifié dès que possible. | Remplissez immédiatement le réservoir de DEF avec un DEF certifié. Le réservoir de DEF est pratiquement vide. | | Purgez immédiatement le réservoir de DEF et remplissez le réservoir de DEF avec un DEF certifié. | | Conduisez immédiatement le véhicule chez le concessionnaire pour la réparation. | | Le symbole de la tortue s'allume lorsque les performances du moteur sont limitées. |

**⚠ AVERTISSEMENT**

La température des gaz d'échappement du moteur est élevée. Pour réduire le risque d'incendie, tenez toujours les matériaux inflammables tels que des feuilles ou de la végétation à l'écart du système d'échappement avant de lancer la régénération manuelle du DPR.

Dans chacune des trois situations indiquées ci-dessus, le couple moteur maximum disponible va être progressivement réduit jusqu'à une valeur ne dépassant pas 50 % du couple maximum, et la vitesse maximale du véhicule sera limitée à 5 MPH.

17792-E0500

AT0F-039A

H1-A038E01.book ix ページ ２０１６年１０月１９日 水曜日 午後５時２６分



4. Exhaust gas after treatment system (English/Spanish)

| | |
|---|---|
| ⚠ CAUTION | If this indicator light starts to flash, see the label affixed to the overhead console. |
| PRECAUCIÓN | Si esta luz indicadora comienza a parpadear, véase la etiqueta adherida a la consola superior. |

4. Exhaust gas after treatment system (English/French)

| | |
|---|---|
| ⚠ CAUTION | If this indicator light starts to flash, see the label affixed to the overhead console. |
| ATTENTION | Si le voyant lumineux commence à clignoter, veuillez vous référer à l'étiquette apposée sur la console supérieure. |

5. Fuel

| | |
|---|---|
| ⚠ CAUTION | USE ULTRA LOW SULFUR DIESEL FUEL ONLY |
| ⚠ ATTENTION | EMPLOYER UNIQUEMENT DU COMBUSTIBEL DIESEL ÀULTRA BASSE TENEUR EN SOUFRE |

6. Fuse

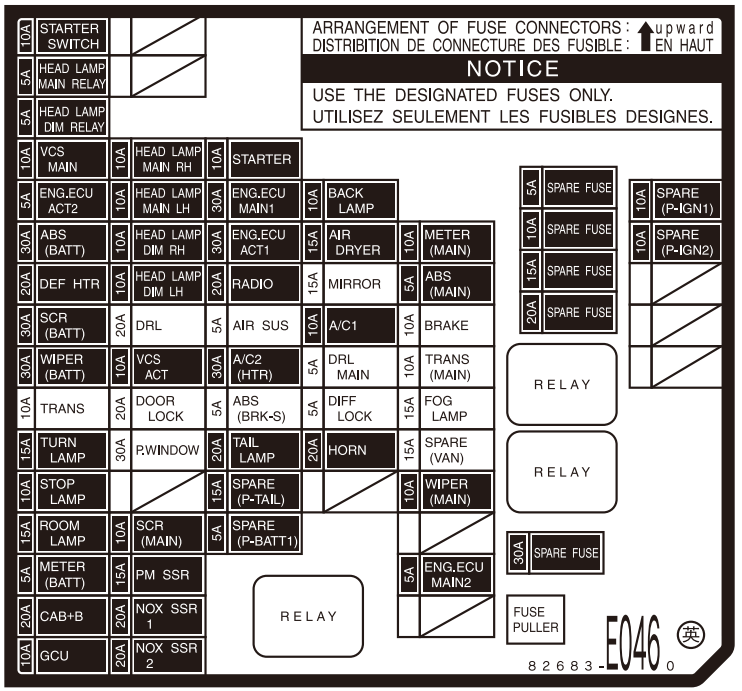


AT0F-040A

## SAFETY LABELS

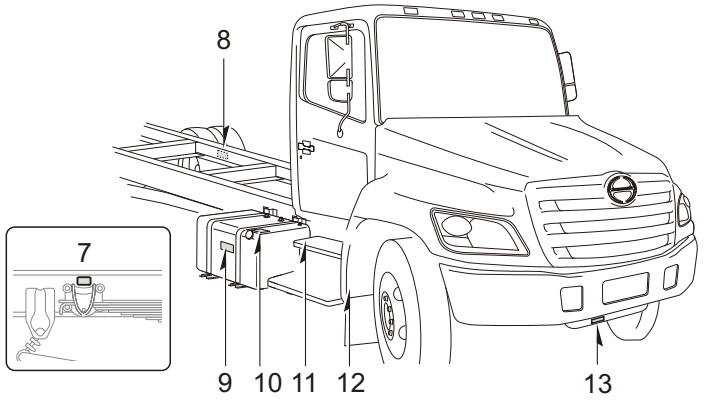


### 7. Suspension spring U-bolt

**⚠ CAUTION** (英)

Suspension spring "u" bolt.
Re-torque all leaf spring "u" bolts at the first 1000-miles(1600km) inspection to prevent possible spring breakage.

**⚠ ATTENTION** (仏)

Bride de ressort de suspênsion.
Toutes les brides de ressort doivent être resserrées à l' inspection des 1600km(1000-miles) afin d' empêcher une repture possible du ressort.

41991-E0010

### 8. Chassis frame

**⚠ CAUTION**

SIDE RAILS AND CROSS MEMBERS (英)

1. Do not drill or cut any portion of the upper or lower flanges of the side rails or cross members.
2. Do not heat (such as welding) any portion of the side rails or cross member.

**⚠ CAUTION**

LONGERONS ET TRAVERSES (仏)

1. Ne pas percer ou couper toute partie des ailes superieure ou inferieure des longerons ou des traverses.
2. Ne pas chauffer (tel quen soudant) toute partie des longerons ou des traverses.

76588-4690

### 9. Fuel tank

**⚠ CAUTION / ATTENTION**

USE ULTRA LOW SULFUR DIESEL FUEL ONLY
Use of improper fuel could cause the engine to fail.

EMPLOYER UNIQUEMENT DU COMBUSTIBLE DIESEL À ULTRA BASSE TENEUR EN SOUFRE
L'utilisation d'un combustible inapproprié risque de faire tomber le moteur en panne.

74559-E0220

### 10. Fuel tank

DURACRAFT TANKS

DARIEN, WI

MEETS ALL F.M.C.S.A. REQUIREMENTS — SIDE MOUNTED TANK
PART NO. S7740-E0***
DATE: — DRAW CAPACITY

WARNING: DO NOT FILL TO MORE THAN 95% OF LIQUID CAPACITY

### 11. NO STEP

**⚠ CAUTION**

NO STEP

### 12. DEF-SCR tank

**⚠ WARNING**

DEF ONLY

1. Use API certified Diesel Exhaust Fluid only for proper function of DEF-SCR SYSTEM and to avoid damages to the system.
2. Stop the engine and leave the key in the ON position while you replenish the DEF tank to change DEF. Otherwise, the engine torque and the vehicle speed will not be restored to original condition. (英)

**⚠ AVERTISSEMENT**

UNIQUEMENT FLUIDE D'ÉCHAPPEMENT DIESEL

1. Utiliser uniquement un fluide d'échappement Diesel certifié par API afin d'assurer le bon fonctionnement du système DEF-SCR et d'éviter d'endommager le système.
2. Arrêter le moteur et laisser la clé de contact en position ON (Marche) lorsque vous faites le plein du réservoir pour remplacer le fluide DEF. Sinon, le couple moteur et la vitesse du véhicule ne seront pas rétablis dans leur état initial.

Never replenish fuel nor water.
Ne jamais faire le plein avec du carburant ou de l'eau. (仏)

17792-E0290

### 13. Quick joint (Allison Automatic transmission only)

**⚠ NOTICE**

► USE CLIPS TO ATTACH/DETAC HOSES. (DO NOT REMOVE NU

► POUR LE BRANCHEMENT OU LE DÉBRANCHEMENT DU BOYAU D' AGIR SUR LA PIÈCE DE RETENU (NE JAMAIS ÔTER L' ÉCROU.)

AT0F-006D

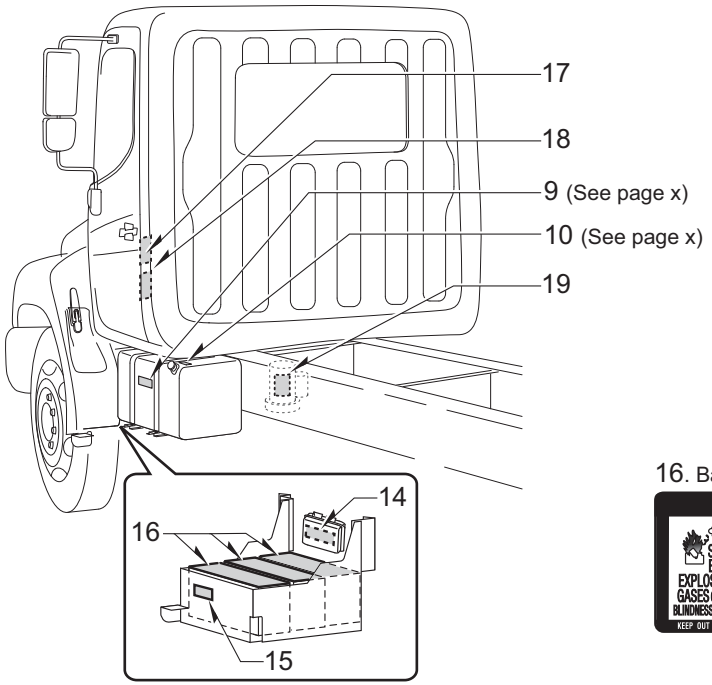


*: A label varies depending on your vehicle specification.

### 14. Fusible links

**NOTICE**

- USE THE DESIGNATED FUSIBULE LINKS, FUSES AND RELAYS ONLY.

### 15. Battery [DEF-SCR (DCU)]

**⚠ WARNING**

Never disconnect the battery terminals nor cut off electricity supply from battery for 10 minutes after the starter key is turned to "LOCK" position to avoid the malfunction of DPR system and DEF-SCR system.

**⚠ AVERTISSEMENT**

Ne déconnectez pas les bornes de la batterie et ne coupez pas l'alimentation électrique depuis la batterie pendant 10 minutes après avoir positionné la clé du démarreur sur « LOCK », car cela pourrait entraîner un mauvais fonctionnement des systèmes DPR et DEF-SCR.

17792-E0251

### 16. Battery*

**⚠ DANGER/POISON**

SHIELD EYES
EXPLOSIVE GASES CAN CAUSE BLINDNESS OR INJURY

NO
- SPARKS
- FLAMES
- SMOKING

SULFURIC ACID CAN CAUSE BLINDNESS OR SEVERE BURNS

FLUSH EYES IMMEDIATELY WITH WATER
GET MEDICAL HELP FAST

KEEP OUT OF THE REACH OF CHILDREN. DO NOT TIP. KEEP VENT CAPS TIGHT AND LEVEL.

### 17. Noise label*

VEHICLE NOISE EMISSION CONTROL INFORMATION

THIS VEHICLE CONFORMS TO U.S. EPA REGULATIONS FOR NOISE EMISSION APPLICABLE TO MEDIUM AND HEAVY TRUCKS.
THE FOLLOWING ACTS OR THE CAUSING THEREOF BY ANY PERSON ARE PROHIBITED BY THE NOISE CONTROL ACT OF 1972.
(A)THE REMOVAL OR RENDERING INOPERATIVE, OTHER THAN FOR PURPOSES OF MAINTENANCE, REPAIR, OR REPLACEMENT, OF ANY NOISE CONTROL DEVICE OR ELEMENT OF DESIGN (LISTED IN THE OWNER'S MANUAL) INCORPORATED INTO THIS VEHICLE IN COMPLIANCE WITH THE NOISE CONTROL ACT.
(B)THE USE OF THIS VEHICLE AFTER SUCH DEVICE OR ELEMENT OF DESIGN HAS BEEN REMOVED OR RENDERED INOPERATIVE.

MFD BY:HINO MOTORS, LTD. DATE OF MANUFACTURE XX/XX

### 18. GHG label*

VEHICLE EMISSION CONTROL INFORMATION
Hino Motors, Ltd.
VEHICLE FAMILY NAME : xxxxxxxxxxx
REGULATORY SUB-CATEGORY : VOCATIONAL VEHICLES : xxxxxxx LBS.
EMISSION CONTROL SYSTEM : xxx
THIS VEHICLE COMPLIES WITH U.S. EPA AND CALIFORNIA REGULATIONS FOR xxxx MY HEAVY-DUTY VEHICLES.

### 19. Air dryer (NABCO only)

注意 PC.NO. 44830–3060
下記の場合、ドライヤの内部点検を行って下さい。
尚本品の取扱いは、車両取扱説明書を御読み下さい。
1） １年又は、６万Ｋｍ走行毎。
2） エアタンクドレンより水分がときどき排出される か、オイルの排出が認められる場合。

CAUTION
Inspect the inside of dryer in such cases as paragraph 1) and 2). As to the handling of this product, kindly refer to the vehicle Service Manual.

1) Every one year or 60,000km in run.
2) Water or oil is present in the air reservoir when check before running.

AT0F-030B

## SAFETY LABELS

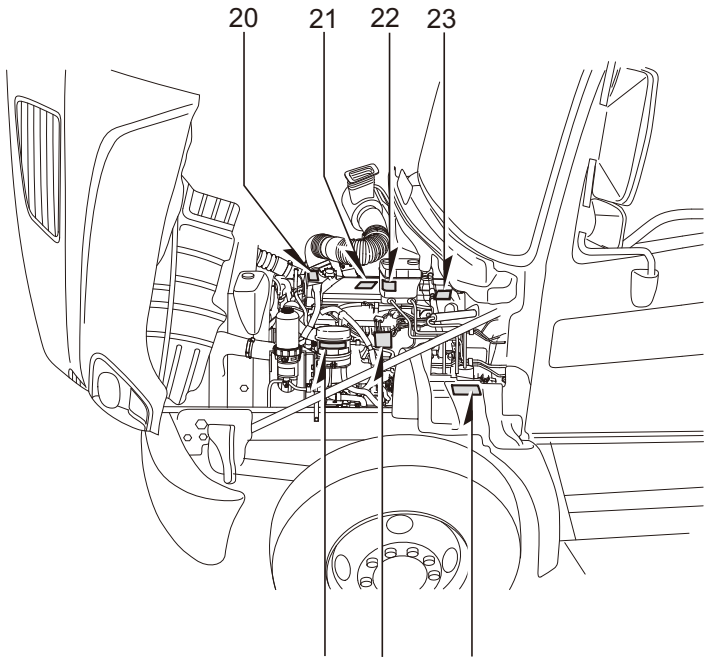


20. Fuel injector

⚠ WARNING

HIGH VOLTAGE

PLACE THE STARTER SWITCH ON "LOCK" POSITION WHEN CARRYING OUT THE JOB WITH THE CYLINDER HEAD COVER REMOVED. WHEN IT IS UNAVOIDABLE TO CARRY OUT YOUR JOB WITH THE STARTER SWITCH AT "ON" POSITION AND WITH THE CYLINDER HEAD COVER REMOVED. DO NOT TOUCH THE HARNESS UNDER THE CYLINDER HEAD COVER. IF YOU DO NOT FOLLOW THE WARNING AND THE INSTRUCTION, YOU MAY GET AN ELECTRIC SHOCK.

22. Brake fluid reservoir tank (Hydraulic brake only)

WARNING
CLEAN FILLER CAP BEFORE REMOVING
USE ONLY DOT 3 FLUID
FROM A SEALED CONTAINER
REFILL TO BOTTOM OF RING
IF FLUID IS MORE THAN ONE
INCH BELOW BOTTOM OF RING
MINERAL OILS SUCH AS
POWER STEERING FLUID MUST NOT BE USED

AVERTISSEMENT
NETTOYER LE COUVERCLE AVANT DE
L'ENLEVER UTILISER SEULEMENT LE
FLUIDE DOT 3 PROVENANT
D'UNFLACON ETANCE
REMETTRE DU LIQUIDE JUSQU' AU BAS DU
REPERE SI LE NIVEAU EST A PLUS
DE 25 MM SOUS CE REPERE
LES HUILES MINERALES COMME LE LIQ'IDE DE
DIRECTION ASSISTEE NE DOIT PAS ETRE UTILISER

21. Engine oil level

NOTICE

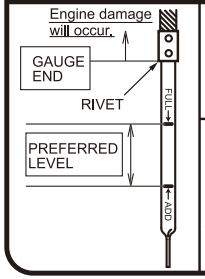


Check engine oil level. Ⓟ
If level is over the "FULL" mark, adjust oil level to the preferred area.
When oil level becomes too high, engine damage will occur.
Refer to the "OWNER'S MANUAL" for detail.

Vérifier le niveau d'huile du moteur.
Si le niveau est supérieur à la marque "FULL", régler le niveau d'huile à celui recommandé.
Si le niveau d'huile devient trés haut, le moteur risque d'étre endommagé.
Pour de plus amples détails, veuillez vous référer au "MANUEL DE L'UTILISATEUR".

AT0F-037B

23. Clutch master cylinder




24. Power steering fluid reservoir tank

| CAUTION | ATTENTION |
|---|---|
| Inspection and maintenance of power steerig fluid | Inspection et entretien du liquide de direction assistée |
| 1.Check the fluid level before starting the engine.<br>2.Intervals of the fluid change and the filter replacement;<br>Initially, 3,000 miles (5,000 km).<br>After that every 36,000 miles (60,000 km).<br>3.Recommended fluid;<br>Automatic transmission fluid DEXRON II or its equivalents.<br>4.Do not let dust get in the fluid when filling or checking the fluid level. | 1. Vérifier le niveau du liquide avant de mettre le moteur en marche.<br>2. Intervalles de vidange de liquide et de remplacement de filtre;<br>La première fois, après 3.000 milles (5.000 km).<br>Ensuite, tous les 36.000 milles (60.000 km).<br>3. Liquide recommandé;<br>Liquide de boîte de vitesses automatique **DEXRON II** ou des produits équivalents.<br>4. Veiller à ne pas laisser de la poussière s'infiltrer dans le liquide au moment d'effectuer le remplissage et la vérification du niveau de liquide. |

英 仏

25. No step (If so equipped)




AT0F-032B

## SAFETY LABELS

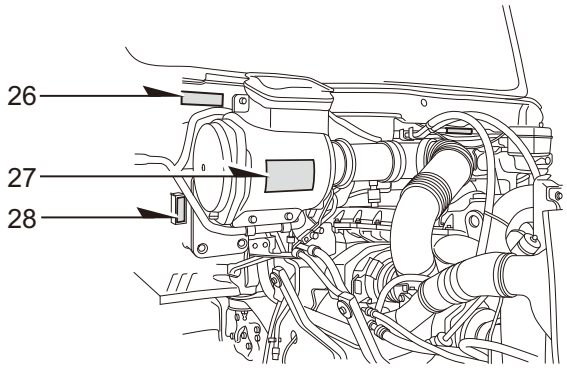


27. Air cleaner

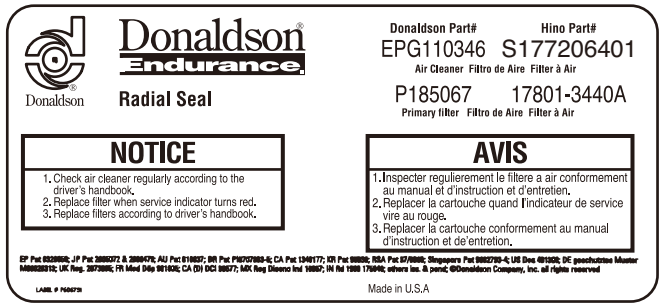


26. Air conditioner refrigerant




28. Fusible links

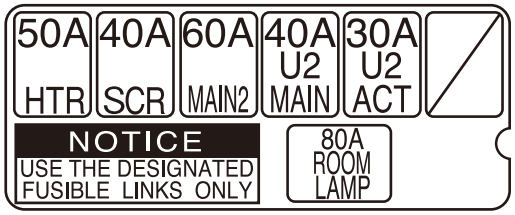


AT0F-026B

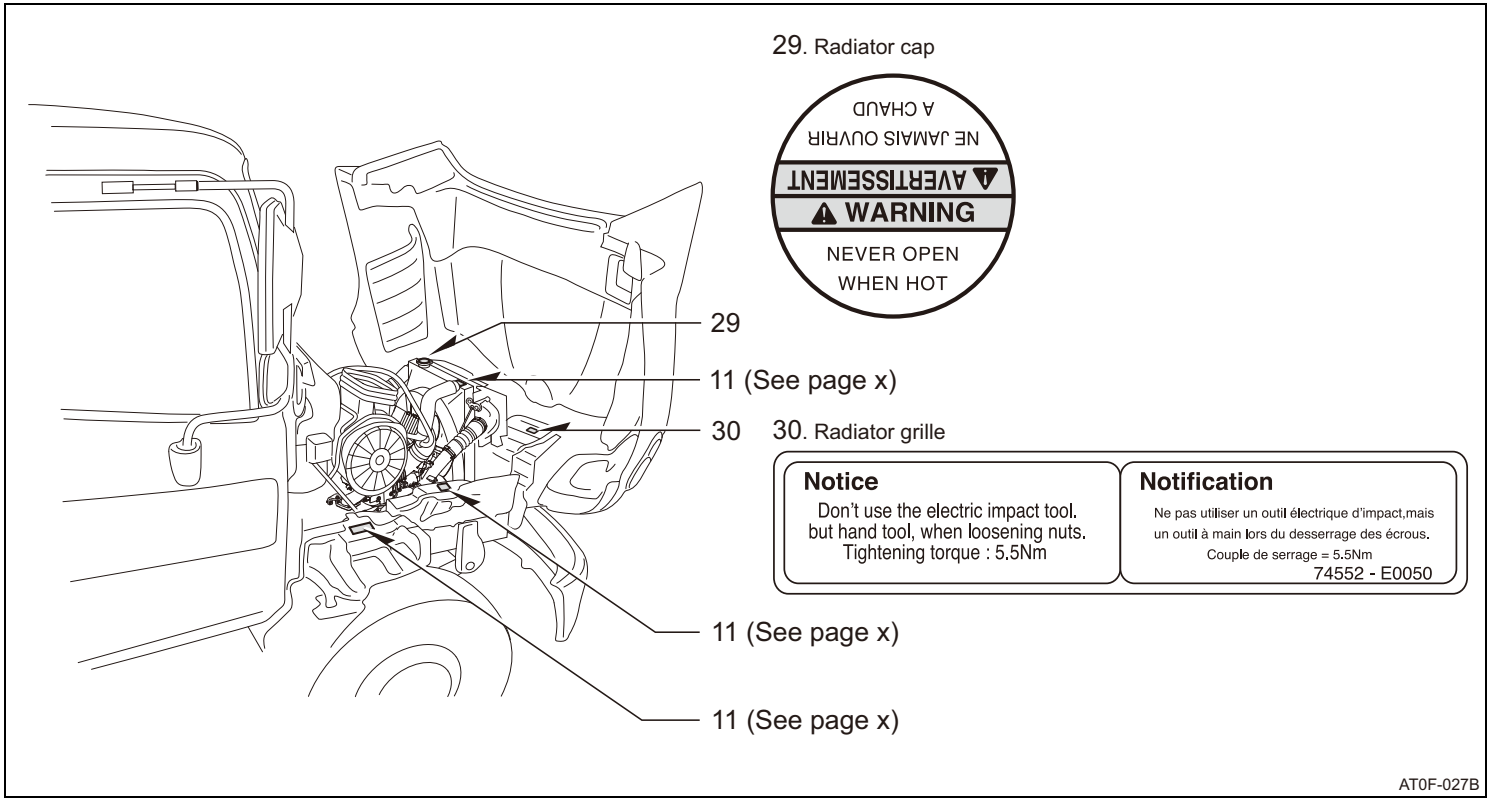
29. Radiator cap
NE JAMAIS OUVRIR
A CHAUD
AVERTISSEMENT
WARNING
NEVER OPEN
WHEN HOT
29
11 (See page x)
30
30. Radiator grille
Notice
Don't use the electric impact tool, but hand tool, when loosening nuts.
Tightening torque : 5.5Nm
Notification
Ne pas utiliser un outil électrique d'impact,mais un outil à main lors du desserrage des écrous.
Couple de serrage = 5.5Nm
74552 - E0050
11 (See page x)
11 (See page x)
AT0F-027B

H1-A038E01.book xvi ページ ２０１６年１０月１９日 水曜日 午後５時２６分

H1-A038E01.book xvii ページ ２０１６年１０月１９日 水曜日 午後５時２６分

# TABLE OF CONTENTS

**1 GENERAL INTRODUCTION** . . . . . [redacted]
**2 OPERATION OF INSTRUMENTS AND CONTROLS**
1 Overview of instruments and controls . . . . . [redacted]
2 Keys and Doors . . . . . [redacted]
3 Seats, Seat belts, Steering wheel and Mirrors . . . . . [redacted]
4 Lights and Wipers . . . . . [redacted]
5 Gauges, Instruments, Displays and Service reminder indicator . . . . . [redacted]
6 Starter switch, Transmission, Pedals and Parking brake . . . . . [redacted]
7 Audio system . . . . . [redacted]
8 Air conditioning system . . . . . [redacted]
9 Other equipment . . . . . [redacted]
**3 STARTING AND DRIVING YOUR HINO VEHICLE** . . . . . [redacted]
**4 IN AN EMERGENCY** . . . . . [redacted]
**5 CORROSION PROTECTION AND APPEARANCE CARE** . . . . . [redacted]
**6 MAINTENANCE**
1 Daily inspection . . . . . [redacted]
2 Periodic maintenance . . . . . [redacted]
3 Periodic maintenance procedures . . . . . [redacted]
**7 REPORTING SAFETY DEFECTS** . . . . . [redacted]
**8 SEAT BELT INSTRUCTIONS FOR CANADIAN OWNERS** . . . . . [redacted]
**9 NOISE CONTROL MAINTENANCE RECORD** . . . . . [redacted]
**10 INDEX** . . . . . [redacted]

H1-A038E01.book xviii ページ ２０１６年１０月１９日 水曜日 午後５時２６分

H1-A038E01.book　1 ページ　２０１６年１０月１９日　水曜日　午後５時２６分

# SECTION 1

## GENERAL INTRODUCTION

Vehicle Identification Number ..... 1-2
Gross Vehicle Weight Rating (GVWR) and
Gross Axle capacity Weight Rating (GAWR) ..... 1-4
Speed Limiter Device ..... 1-14
Overloading ..... 1-14
Service Assistance ..... 1-15
Maintenance Service ..... 1-15
Diesel Fuel ..... 1-16
Painting ..... 1-16

Read the entire manual before using the vehicle. Failure to follow instructions and safety precautions could result in death, serious injury and/or damage to the vehicle.

**Vehicle Identification Number—**

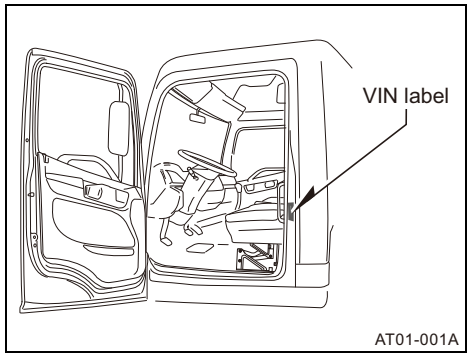


Vehicle Identification Number (VIN) is shown on the VIN label.

The VIN label is affixed to the driver's side pillar of the cab. (See illustration above.)

When ordering replacement parts from your Hino dealer, please inform the Hino dealer of the VIN.

## —Vehicle Identification Number (VIN) Structure

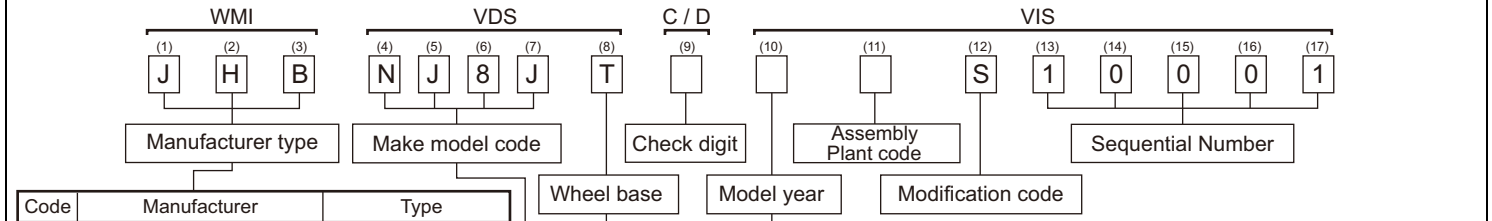


| Code | Manufacturer | Type |
|---|---|---|
| JHA | Hino Motors, Ltd. | Truck |
| JHB | Hino Motors, Ltd. | Incomplete vehicle |
| 5PV | Hino Motors Manufacturing U.S.A., Inc. | Incomplete vehicle |
| 2AY | Hino Motors Canada, Ltd. | Incomplete vehicle |

| Class | Model | Production Code | Engine | Brake Systems | Gross Vehicle Weight Rating | |
|---|---|---|---|---|---|---|
| | | | | | Lbs. | Kg |
| 6 | **Hino 238** | NE8J | J08E Diesel engine | Hydraulic | 19,501-26,000 | 8,846-11,793 |
| | **Hino 258** | NE8J | | | 19,501-26,000 | 8,846-11,793 |
| | | NJ8J | | Full Air | 23,001-26,000 | 10,434-11,793 |
| | **Hino 268** | NE8J | | Hydraulic | 19,501-26,000 | 8,846-11,793 |
| | | NJ8J | | Full Air | 23,001-26,000 | 10,434-11,793 |
| | | NV8J | | | 23,001-26,000 | 10,434-11,793 |
| 7 | **Hino 338** | NF8J | | Hydraulic | 26,001-33,000 | 11,794-14,968 |
| | | NV8J | | Full Air | 30,001-33,000 | 13,609-14,968 |
| 8 | **Hino 358** | NH8J | | | 33,001-35,000 | 14,969-15,875 |

| Length | | |
|---|---|---|
| Code | in. | mm |
| G | 152 | 3,861 |
| J | 175 | 4,445 |
| L | 187 | 4,750 |
| M | 205 | 5,207 |
| N | 212 | 5,385 |
| P | 217 | 5,512 |
| R | 235 | 5,969 |
| T | 253 | 6,426 |
| V | 271 | 6,883 |

| Code | Year |
|---|---|
| J | 2018 |
| K | 2019 |
| L | 2020 |
| M | 2021 |
| N | 2022 |
| O | 2023 |

For details of vehicle identification number, refer to the Workshop Manual.

AT01-002I

## Gross Vehicle Weight Rating (GVWR) and Gross Axle capacity Weight Rating (GAWR)——Hino 238

| Vehicle type | Transmission type | GVWR kg (lbs.) | GAWR kg (lbs.) | | Brake systems | Tire size |
|---|---|---|---|---|---|---|
| | | | Front | Rear | | |
| NE8J□SA-EBF<br>NE8J□SG-EBF | Allison® 2200RDS (6AT) | 10430 (23000) | 3630 (8000) | 7940(17500) | Hydraulic | • 11R22.5-14(G)<br>• 10R22.5-14(G) |

□ as code (wheel base) "**J**, **L**, **M**, **N**, **P**, **R**, **T**, **V**". See page 1-3 for more detail.

| Vehicle type | Transmission type | GVWR kg (lbs.) | GAWR kg (lbs.) | | Brake systems | Tire size |
|---|---|---|---|---|---|---|
| | | | Front | Rear | | |
| NE8J□SA-HBF<br>NE8J□SG-HBF | Allison® 2200HS (6AT)<br>Allison® 2200RDS (6AT) | 10430 (23000) | 3630 (8000) | 7940(17500) | Hydraulic | • 11R22.5-14(G)<br>• 10R22.5-14(G) |

□ as code (wheel base) "**G**, **J**, **L**, **M**, **N**, **P**, **R**, **T**, **V**". See page 1-3 for more detail.

## —Hino 258

| Vehicle type | Transmission type | GVWR kg (lbs.) | GAWR kg (lbs.) | | Brake systems | Tire size |
|---|---|---|---|---|---|---|
| | | | Front | Rear | | |
| NE8J□SA-EBF<br>NE8J□SG-EBF | Allison® 2200HS (6AT)<br>Allison® 2200RDS(6AT) | 11570 (25500) | 3630 (8000) | 7940(17500) | Hydraulic | • 245/70R19.5-16(H)<br>• Fr: 245/70R19.5-14(G)<br>Rr: 245/70R19.5-16(H) |

□ as code (wheel base) "**J**, **L**, **M**, **N**, **P**, **R**, **T**, **V**". See page 1-3 for more detail.

| Vehicle type | Transmission type | GVWR kg (lbs.) | GAWR kg (lbs.) | | Brake systems | Tire size |
|---|---|---|---|---|---|---|
| | | | Front | Rear | | |
| NE8J□SA-GBF<br>NE8J□SG-GBF | Eaton® FS5406A | 11570 (25500) | 3630 (8000) | 7940 (17500) | Hydraulic | • 245/70R19.5-16(H)<br>• Fr: 245/70R19.5-14(G)<br>Rr: 245/70R19.5-16(H) |
| NE8J□SA-HBF<br>NE8J□SG-HBF | Allison® 2200HS (6AT)<br>Allison® 2200RDS(6AT) | | | | | |
| NJ8J□SG-JBF | Eaton® FS5406A | | | | Full Air | |
| NJ8J□SA-KBF<br>NJ8J□SG-KBF | Allison® 2200HS (6AT)<br>Allison® 2200RDS(6AT) | | | | | |
| NJ8J□SA-PBF<br>NJ8J□SG-PBF | Allison® 2500HS (6AT)<br>Allison® 2500RDS(6AT) | | | | | |

□ as code (wheel base) "**G**, **J**, **L**, **M**, **N**, **P**, **R**, **T**, **V**". See page 1-3 for more detail.

## —Hino 268

| Vehicle type | Transmission type | GVWR kg (lbs.) | GAWR kg (lbs.) | | Brake systems | Tire size |
|---|---|---|---|---|---|---|
| | | | Front | Rear | | |
| NE8J□SA-EBF<br>NE8J□SG-EBF | Allison® 2200HS (6AT)<br>Allison® 2200RDS(6AT)<br>Allison® 2500HS (6AT)<br>Allison® 2500RDS(6AT) | 11770 (25950) | 3630 (8000)<br>4540 (10000) | 8620 (19000) | Hydraulic | • 11R22.5-14(G)<br>• 255/70R22.5-16(H)<br>• 295/75R22.5-14(G) |

□ as code (wheel base) "**J**, **L**, **M**, **N**, **P**, **R**, **T**, **V**". See page 1-3 for more detail.

| Vehicle type | Transmission type | GVWR kg (lbs.) | GAWR kg (lbs.) | | Brake systems | Tire size |
|---|---|---|---|---|---|---|
| | | | Front | Rear | | |
| NE8J□SA-GBF<br>NE8J□SG-GBF | Eaton® FS5406A | 11770 (25950) | 3630 (8000)<br>4540 (10000) | 8620 (19000) | Hydraulic | • 11R22.5-14(G)<br>• 255/70R22.5-16(H)<br>• 295/75R22.5-14(G) |
| NE8J□SA-HBF<br>NE8J□SG-HBF | Allison® 2200HS (6AT)<br>Allison® 2200RDS(6AT)<br>Allison® 2500HS (6AT)<br>Allison® 2500RDS(6AT) | | | | | |

□ as code (wheel base) "**G**, **J**, **L**, **M**, **N**, **P**, **R**, **T**, **V**". See page 1-3 for more detail.

| Vehicle type | Transmission type | GVWR kg (lbs.) | GAWR kg (lbs.) | | Brake systems | Tire size |
|---|---|---|---|---|---|---|
| | | | Front | Rear | | |
| NJ8J□SA-JBF<br>NJ8J□SG-JBF | Eaton® FS5406A | 11770 (25950) | 3630 (8000)<br>4540 (10000) | 8620 (19000) | Full Air | • 11R22.5-14(G)<br>• 255/70R22.5-16(H)<br>• 295/75R22.5-14(G) |

□ as code (wheel base) "**G**, **J**, **L**, **M**, **P**, **R**, **T**, **V**". See page 1-3 for more detail.

| Vehicle type | Transmission type | GVWR kg (lbs.) | GAWR kg (lbs.) | | Brake systems | Tire size |
|---|---|---|---|---|---|---|
| | | | Front | Rear | | |
| NJ8J□SA-KBF | Allison® 2200HS (6AT) | 11770 (25950) | 3630 (8000)<br>4540 (10000) | 8620 (19000) | Full Air | • 11R22.5-14(G)<br>• 255/70R22.5-16(H)<br>• 295/75R22.5-14(G) |
| NJ8J□SG-KBF | Allison® 2200RDS(6AT) | | | | | |
| NJ8J□SA-PBF | Allison® 2500HS (6AT) | | | | | |
| NJ8J□SG-PBF | Allison® 2500RDS(6AT) | | | | | |

□ as code (wheel base) "**G**, **J**, **L**, **M**, **N**, **P**, **R**, **T**, **V**". See page 1-3 for more detail.

| Vehicle type | Transmission type | GVWR kg (lbs.) | GAWR kg (lbs.) | | Brake systems | Tire size |
|---|---|---|---|---|---|---|
| | | | Front | Rear | | |
| NV8J□SA-NBF<br>NV8J□SA-TBF<br>NV8J□SG-NBF<br>NV8J□SG-TBF | Eaton® FS6406A | 11770 (25950) | 4540 (10000) | 8620 (19000)*1<br>9530 (21000) | Full Air | • 11R22.5-14(G)<br>• 295/75R22.5-14(G) |
| | | | 5440 (12000)*1 | 8620 (19000)*1 | | |
| | | | 5980 (13200)*1 | 8620 (19000)*1 | | • 11R22.5-16(H)*1 |

□ as code (wheel base) "**G**, **J**, **L**, **M**, **P**, **R**, **T**, **V**". See page 1-3 for more detail.

*1:**NV8J□SA-NBF** and **NV8J□SA-TBF** only.

| Vehicle type | Transmission type | GVWR kg (lbs.) | GAWR kg (lbs.) | | Brake systems | Tire size |
|---|---|---|---|---|---|---|
| | | | Front | Rear | | |
| NV8J□SA-PBF<br>NV8J□SA-SBF<br>NV8J□SG-PBF<br>NV8J□SG-SBF | Allison® 2500HS (6AT)<br>Allison® 2500RDS(6AT)<br>Allison® 3000RDS(6AT)<br>Allison® 3500RDS(6AT) | 11770 (25950) | 4540 (10000) | 8620 (19000)*2<br>9530 (21000) | Full Air | • 11R22.5-14(G)<br>• 295/75R22.5-14(G) |
| | | | 5440 (12000)*2 | 8620 (19000)*2 | | |
| | | | 5980 (13200)*2 | 8620 (19000)*2 | | • 11R22.5-16(H)*2 |

□ as code (wheel base) "**G**, **J**, **L**, **M**, **P**, **R**, **T**, **V**". See page 1-3 for more detail.

*2:**NV8J□SA-PBF** and **NV8J□SA-SBF** only.

**—Hino 338**

| Vehicle type | Transmission type | GVWR kg (lbs.) | GAWR kg (lbs.) | | Brake systems | Tire size |
|---|---|---|---|---|---|---|
| | | | Front | Rear | | |
| NF8J□SA-DBF<br>NF8J□SG-DBF | Eaton® FS6406A | 14950 (33000) | 5440 (12000) | 9530 (21000) | Hydraulic | • 11R22.5-14(G)<br>• 295/75R22.5-14(G) |
| NF8J□SA-EBF<br>NF8J□SG-EBF | Allison® 2500HS (6AT)<br>Allison® 2500RDS(6AT) | | | | | |

□ as code (wheel base) "**J**, **L**, **M**, **P**, **R**, **T**, **V**". See page 1-3 for more detail.

Models for **Canada** only.

| Vehicle type | Transmission type | GVWR kg (lbs.) | GAWR kg (lbs.) | | Brake systems | Tire size |
|---|---|---|---|---|---|---|
| | | | Front | Rear | | |
| NV8J□SA-NBF<br>NV8J□SA-TBF<br>NV8J□SG-NBF<br>NV8J□SG-TBF | Eaton® FS6406A | 14950 (33000) | 4540 (10000) | 10430 (23000) | Full Air | • 11R22.5-14(G) |
| | | | 5440 (12000) | 9530 (21000) | | • 11R22.5-14(G)<br>• 295/75R22.5-14(G) |
| | | | | 10430 (23000) | | • 11R22.5-14(G) |
| | | | 5980 (13200) | 9530 (21000)<br>10430 (23000) | | • 11R22.5-16(H) |
| | | 14950 (33000)*1 | 4540 (10000) | 10430 (23000) | | • 11R22.5-14(G) |
| | | | 5440 (12000) | 9530 (21000) | | • 11R22.5-14(G)<br>• 295/75R22.5-14(G) |
| | | | 5980 (13200) | 9530 (21000) | | • 11R22.5-16(H) |

□ as code (wheel base) "**G**, **J**, **L**, **M**, **P**, **R**, **T**, **V**". See page 1-3 for more detail.

*1:Models for **Canada** only.

| Vehicle type | Transmission type | GVWR kg (lbs.) | GAWR kg (lbs.) | | Brake systems | Tire size |
|---|---|---|---|---|---|---|
| | | | Front | Rear | | |
| NV8J□SA-PBF<br>NV8J□SA-SBF<br>NV8J□SG-PBF<br>NV8J□SG-SBF | Allison® 2500HS (6AT)<br>Allison® 2500RDS(6AT)<br>Allison® 3000RDS(6AT)<br>Allison® 3500RDS(6AT) | 14950 (33000) | 4540 (10000) | 10430 (23000) | Full Air | • 11R22.5-14(G) |
| | | | 5440 (12000) | 9530 (21000) | | • 11R22.5-14(G)<br>• 295/75R22.5-14(G) |
| | | | | 10430 (23000) | | • 11R22.5-14(G) |
| | | | 5980 (13200) | 9530 (21000)<br>10430 (23000) | | • 11R22.5-16(H) |
| | | 14950 (33000)*1 | 4540 (10000) | 10430 (23000) | | • 11R22.5-14(G) |
| | | | 5440 (12000) | 9530 (21000) | | • 11R22.5-14(G)<br>• 295/75R22.5-14(G) |
| | | | 5980 (13200) | 9530 (21000) | | • 11R22.5-16(H) |

□ as code (wheel base) "**G**, **J**, **L**, **M**, **P**, **R**, **T**, **V**". See page 1-3 for more detail.

*1:Models for **Canada** only.

**—Hino 358**

| Vehicle type | Transmission type | GVWR kg (lbs.) | GAWR kg (lbs.) | | Brake systems | Tire size |
|---|---|---|---|---|---|---|
| | | | Front | Rear | | |
| NH8J□SA-TBF<br>NH8J□SG-TBF | Eaton® FS6406A | 15870 (35000) | 5440 (12000) | 10430 (23000) | Full Air | • 11R22.5-14(G) |
| | | | 5980 (13200) | | | • 11R22.5-16(H) |
| | | 15870 (35000)*1 | 5440 (12000) | 10430 (23000) | | • 11R22.5-14(G) |
| | | | 5980 (13200) | | | • 11R22.5-16(H) |
| | | | 6350 (14000) | 10290 (22700) | | • Fr: 295/75R22.5-7160LBS<br>Rr: 295/75R22.5-14(G) |

□ as code (wheel base) "**G**, **J**, **L**, **M**, **P**, **R**, **T**, **V**". See page 1-3 for more detail.

*1: Models for **Canada** only.

| Vehicle type | Transmission type | GVWR kg (lbs.) | GAWR kg (lbs.) | | Brake systems | Tire size |
|---|---|---|---|---|---|---|
| | | | Front | Rear | | |
| NH8J□SA-SBF<br>NH8J□SG-SBF | Allison® 3000RDS(6AT)<br>Allison® 3500RDS(6AT) | 15870 (35000) | 5440 (12000) | 10430 (23000) | Full Air | • 11R22.5-14(G) |
| | | | 5980 (13200) | | | • 11R22.5-16(H) |
| | | 15870 (35000)*1 | 5440 (12000) | 10430 (23000) | | • 11R22.5-14(G) |
| | | | 5980 (13200) | | | • 11R22.5-16(H) |
| | | | 6350 (14000) | 10290 (22700) | | • Fr: 295/75R22.5-7160LBS<br>Rr: 295/75R22.5-14(G) |

□ as code (wheel base) "**G**, **J**, **L**, **M**, **P**, **R**, **T**, **V**". See page 1-3 for more detail.

*1: Models for **Canada** only.

## Speed Limiter Device (if your vehicle is so equipped)

**Some Hino vehicles are equipped with an automatic six speed Speed Limiter Device.**

**⚠ WARNING**

**Never change the size of any tire on a Hino vehicle or the rear axle gear ratio of a Hino vehicle without having a Hino dealer tune the speed limit on the Hino vehicle. Otherwise, the speed limiter device could cause excessive vibrations of the propeller shaft and severe damage to the transmission resulting in loss of control of the Hino vehicle and death or serious injuries in an accident.**

## Overloading

**⚠ WARNING**

**Exceeding maximum permissible weight ratings can result in vehicle damage and accidents resulting in death or serious injuries.**

- **Never let the actual weights at the front and rear axles exceed the permissible Gross Vehicle Weight Rating (GVWR) or Gross Axle Weight Rating (GAWR). Always distribute the weight of the cargo carried by the vehicle properly over the front and rear axles as well as equally on both sides of the center line of the vehicle. Otherwise, you may lose control of your vehicle, resulting in death or serious injuries in an accident.**
- **GVWR and GAWR of the vehicle are found on the Certification Label attached to the driver's side pillar of the cab. See page 1-2.**

GVWR is the Gross Vehicle Weight Rating. This is the maximum allowed weight for your vehicle.

GAWR is the Gross Axle Weight Rating. This is the total weight that one axle, front or rear, is designed to transmit to the ground.

GAWRs: Is the combined total of both the front axle GAWR and the rear axle GAWR.

- Since the GVWR and GAWR are determined by taking into consideration the strength of all of the vehicle components, as well as vehicle handling and stability, vehicle brake performance and other factors, the addition of frame reinforcement and heavy duty springs will not increase either the GVWR or the GAWR of the vehicle as set forth on the Certification Label.
- Any vehicle failure caused by overloading is regarded as a misuse of the vehicle, misuse of the Hino vehicle, such as by overloading, voids the Hino Vehicle Warranty.
- GVWR and GAWR only indicate the vehicle loading capacity. You must also observe all state and local regulations with respect to vehicle loading.

### Service Assistance

If you need maintenance service, consult your Hino dealer.

### Maintenance Service

Daily maintenance and periodic maintenance should be performed to help you enjoy safe and trouble-free operation of your vehicle. For further information, see “Table 1: Recommended maintenance service” on page 6-43.

## Diesel Fuel

- Use ultra low sulfur diesel fuel only for Hino vehicles equipped with a diesel engine. For details, see “Fuel system” on page 6-60.

**⚠ CAUTION**

- **Never use fuel additives or fuel dehydration agents which may generate smoke and soot from the fuel system. Such fuel additives and fuel dehydration agents may result in malfunction of the fuel system supply pump and fuel system injector.**
- **Never install any device in the fuel tank for the purpose of the enhancement of fuel efficiency. Particles or fragments coming off such devices may result in malfunction of the fuel system supply pump and fuel system injector.**

- When using biodiesel fuel, see “Table 8: Requirements of biodiesel fuel usage” on page 6-109, and please consult your Hino dealer.

**⚠ CAUTION**

**Use of certain biodiesel fuel may damage the exhaust system. Be sure to contact your Hino dealer and follow the dealer’s instructions regarding the use of biodiesel fuel before you use the biodiesel fuel with your vehicle.**

## Painting—

**Painting of the Chassis:**

**⚠ CAUTION**

**Do not paint the chassis. Painting may damage vital components of the vehicle which are installed on the chassis such as brake hoses and harness couplings. Be sure to read the manual supplied by the manufacturer of the rear body before painting the rear body mounted on the chassis.**

H1-A038E01.book 17 ページ ２０１６年１０月１９日 水曜日 午後５時２６分

**Painting of the Cab:**

**⚠ CAUTION**

**The vehicle parts which are listed on pages 1-18 and 1-19 are made of materials which can easily be damaged by painting with thinner, or solvents containing thinner. For the protection of such parts, be sure to observe the following instructions.**

- **Always properly mask the parts listed on pages 1-18 and 1-19.**
- **If paint should accidentally get on any of the parts listed on pages 1-18 and 1-19, never use thinner or solvents containing thinner. Instead, use kerosene to remove the paint.**
- **If you remove the parts on the list before painting, reinstall them properly after the paint has thoroughly dried.**
- **Always make certain that the painted surfaces have dried before reinstalling any parts, and particularly plastic parts, which have been removed. If heating devices are used to dry the paint, such plastic parts could be deformed if the heat generated exceeds 177°F (80°C).**

**—Parts:**

| No. | Part name | Remarks | Material |
|---|---|---|---|
| 1 | Emblem | Top marks | P |
| 2 | Inner grip | | P & S |
| 3 | Side turn signal lights | | P |
| 4 | Clearance lights | Installed on both sides of the cab roof | P |
| 5 | Identification lights | Installed at the center front of the cab | P |
| 6 | Headlights | | P |
| 7 | Rear combination lights | Installed at the rear end of the frame | P |
| 8 | Fuel filter with water separator | Installed in the engine compartment | P & S |
| 9 | Fender | | P |
| 10 | Step | | S |
| 11 | Splash board | | P & S |
| 12 | Grille | | P |
| 13 | Cooling fan | Engine part | P |

***NOTICE:***

***P** = Plastic, R - Rubber: Use of thinners can produce cracks, fractures, etc.*

***S** = Painted steel: Although made of steel, if paint thinners are used, the paint loses its shine.*

***O** = Various materials: Use of thinner erases letters.*

| No. | Part name | Remarks | Material |
|---|---|---|---|
| 14 | Battery and cover (indicator component) | Indicator for checking fluid level | P |
| 15 | Mud guard | | R |
| 16 | Rubber parts | Includes cooler hose if there is air-conditioned | R |
| 17 | Hood | | P |
| 18 | Cab outer plate, front bumper | | S |
| 19 | Caution plate | | O |
| 20 | Wiper blade | | R |
| 21 | Wiper cap | Pivot cover | P |
| 22 | DEF tank | | P |
| 23 | DEF pump | | P |
| 24 | DCU | | P |
| 25 | BCU | | P |

***NOTICE:***

***P** = Plastic, R - Rubber: Use of thinners can produce cracks, fractures, etc.*

***S** = Painted steel: Although made of steel, if paint thinners are used, the paint loses its shine.*

***O** = Various materials: Use of thinner erases letters.*

H1-A038E01.book 20 ページ ２０１６年１０月１９日 水曜日 午後５時２６分

H1-A038E01.book 1 ページ ２０１６年１０月１９日 水曜日 午後５時２６分

# SECTION 2 – 1

## OPERATION OF INSTRUMENTS AND CONTROLS

### Overview of instruments and controls

Instrument panel overview ..... 2-2
Instrument cluster overview ..... 2-3
Warning light and Indicator light ..... 2-4
Warning light and Indicator light (Information display)..... 2-7

Read the entire manual before using the vehicle. Failure to follow instructions, warnings and safety precautions could result in death, serious injury and/or damage to the vehicle.

## Instrument panel overview

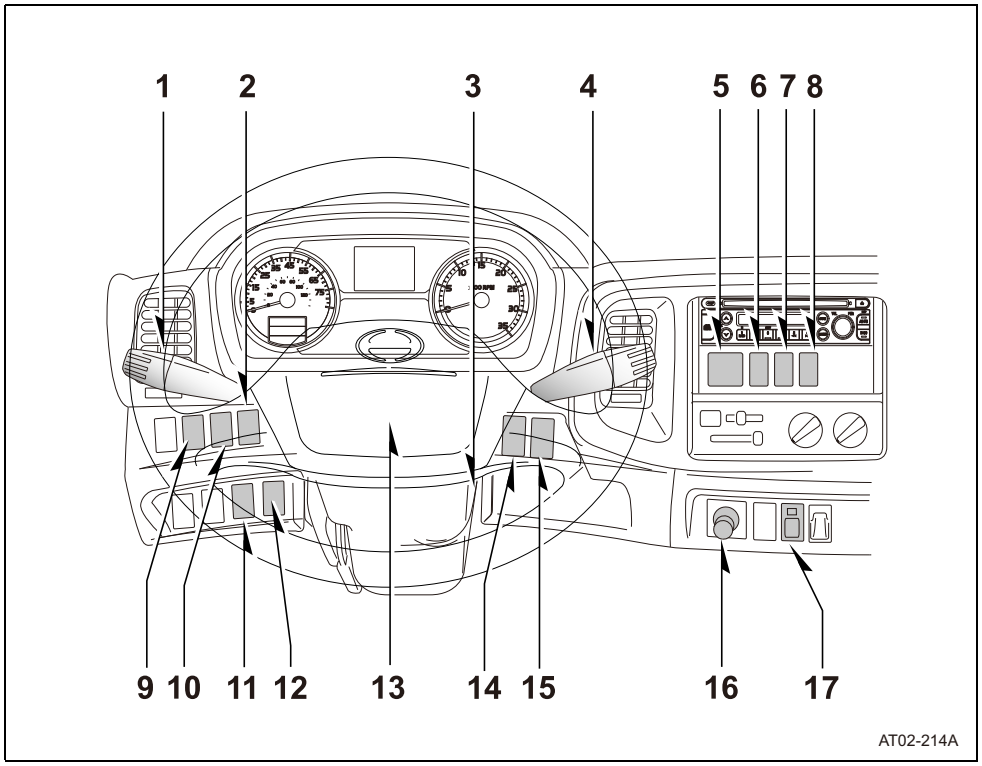


1. Head light and turn signal switches
2. Rheostat light control switch
3. Key with steering lock
4. Wiper, washer and exhaust brake switches
5. Rearview mirror control switch
6. Mirror heater switch
7. Van light switch
8. Differential lock switch
9. Cruise control set button
10. Cruise control main switch
11. Air suspension dump switch
12. Information display control switch
13. Electric horn
14. Economy running switch
15. Air horn switch
16. Power outlet
    Cigarette lighter (If so equipped)
17. DPR manual regeneration switch

## Instrument cluster overview

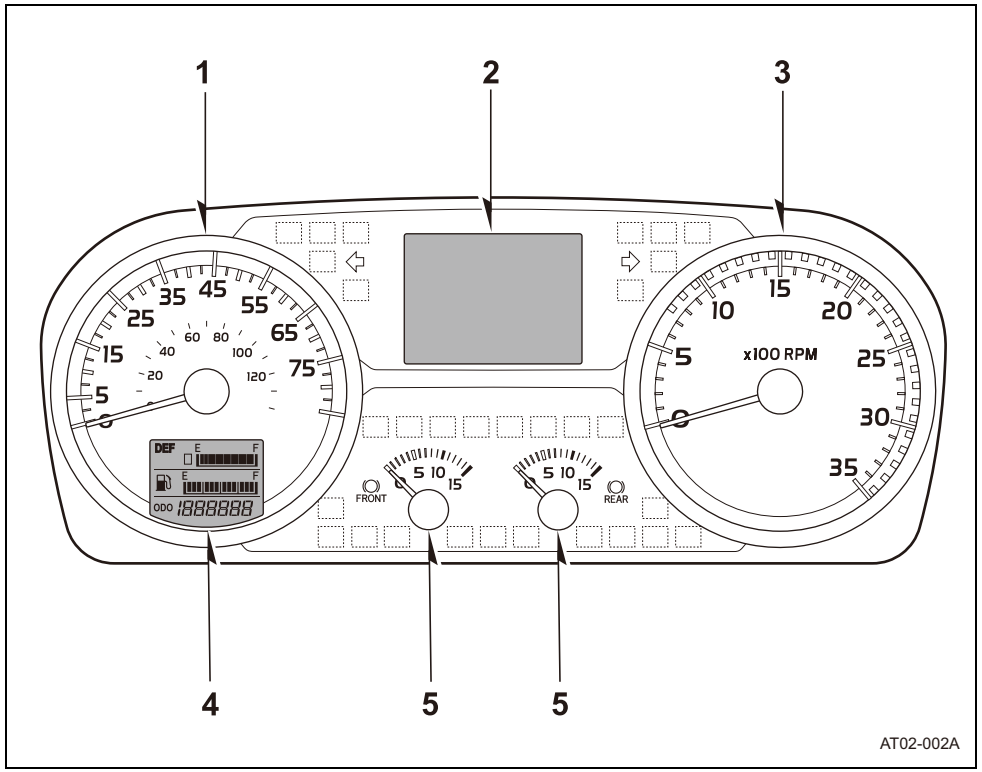


The gauges and information display for your vehicle are mounted on the instrument cluster.

**⚠ CAUTION**

**For safe driving, do not place anything on the driver's seat, the passenger's seat, dashboard or instrument panel that may obstruct the driver's view of the instrument panel and the road through the windshield and windows.**

1. Speedometer
2. Information display
3. Tachometer
4. DEF (Diesel Exhaust Fluid) and Odometer
5. Air pressure gauge
   (Full air brake model only)

## Warning light and Indicator light

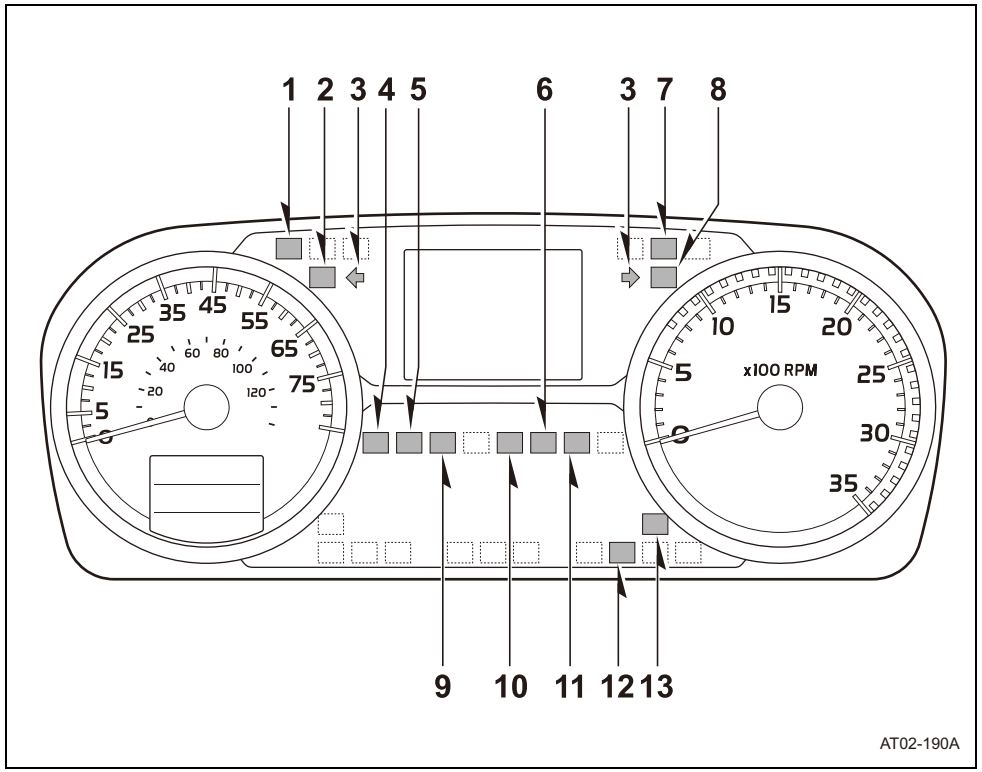


### Warning lights

Your vehicle is equipped with warning lights on the instrument cluster. The warning lights do not come on while driving if the related systems are functioning properly.

The warning lights turn on when the key is turned to the "**ON**" position, and before the engine is activated. If the warning lights do not light, it means that the warning lights are burned out.

**⚠ WARNING**

**After starting the engine, if the warning lights do not turn off and/or the buzzer sounds, there is a system malfunction. In a safe manner, pull off the road immediately, stop the vehicle at a safe distance from moving traffic, and contact your Hino dealer as soon as possible.**

Note that all warning lights will turn off if the key is turned to the “**ACC**” or “**LOCK**” position.

**⚠ WARNING**

**Failure to heed warning lights and instrument cluster messages can cause the vehicle to stop in traffic and result in an accident that could cause serious injury or death.**

**Never ignore warning lights or instrument cluster messages.**

| | | |
|---|---|---|
| 1 |  | Exhaust brake |
| 2 |  | Headlight high beam light |
| 3 |  | Turn signal or hazard lights |
| 4 |  | Parking brake |
| 5 |  | Brake pressure |
| 6 |  | MIL (Malfunction Indicator Light) |
| 7 |  | Exhaust gas after treatment system maintenance requirement light |
| 8 |  | DPR indicator light |

| | | |
|---|---|---|
| 9 |  | ABS line |
| 10 | SVS | SVS (Service Vehicle Soon) light |
| 11 |  | Battery charge line |
| 12 |  | Height control indicator light |
| 13 |  | Pre-heater light |

For details, see “Warning lights” on pages 2-66 to 2-68 and “Indicator lights” on pages 2-73 to 2-74.

## Warning light and Indicator light (Information display)

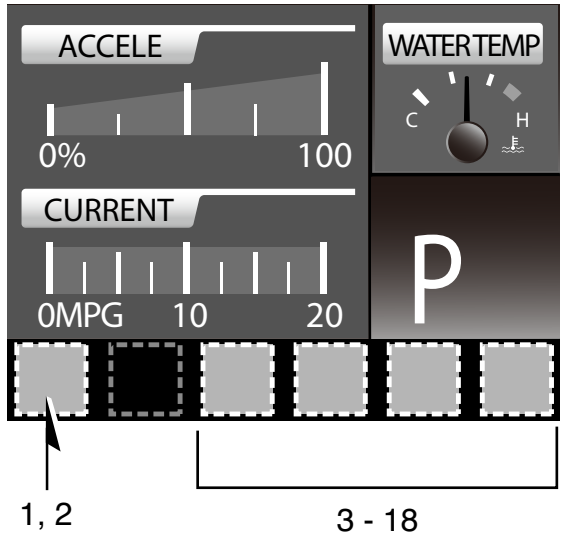


| | | |
|---|---|---|
| 1 | CRUISE | Cruise control (Preparation) |
| 2 | | Cruise control (Operation) |
| 3 | STOP | Engine shutdown (If so equipped) |
| 4 | | Low coolant level |
| 5 | | Low engine oil pressure |
| 6 | | Engine coolant (Red) - Engine overheat |
| 7 | | Automatic transmission |

For details, see “Warning lights” on pages 2-66 to 2-68 and “Indicator lights” on pages 2-73 to 2-74.

| | | |
|---|---|---|
| 8 |  | Automatic transmission temperature |
| 9 |   | DEF quality malfunction |
| 10 |  | After treatment system (DEF-SCR system and DPR) malfunction |
| 11 |  | Low DEF |
| 12 |  | Low fuel |
| 13 |  | PTO (If so equipped) |
| 14 |  | Differential lock (If so equipped) |
| 15 |  | Engine coolant (Blue) - Low temperature |

| | | |
|---|---|---|
| 16 |  | Drain fuel filter |
| 17 |  | Maintenance |
| 18 |  | Low power |

For details, see “Warning lights” on pages 2-66 to 2-68 and “Indicator lights” on pages 2-73 to 2-74.

H1-A038E01.book 9 ページ ２０１６年１０月１９日 水曜日 午後５時２６分

# SECTION 2 – 2

## OPERATION OF INSTRUMENTS AND CONTROLS

### Keys and Doors

Keys ..... 2-10
Doors ..... 2-10
Keyless entry system ..... 2-12
Windows ..... 2-19
Protection against theft ..... 2-21
Engine hood ..... 2-21

Read the entire manual before using the vehicle. Failure to follow instructions, warnings and safety precautions could result in death, serious injury and/or damage to the vehicle.

## Keys

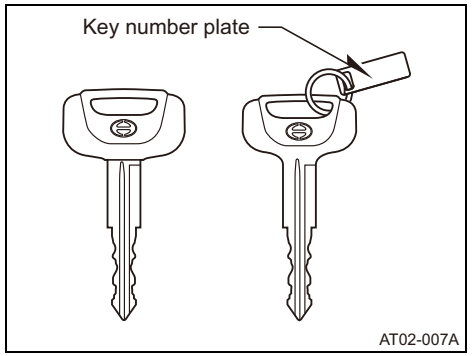


**Type 1**

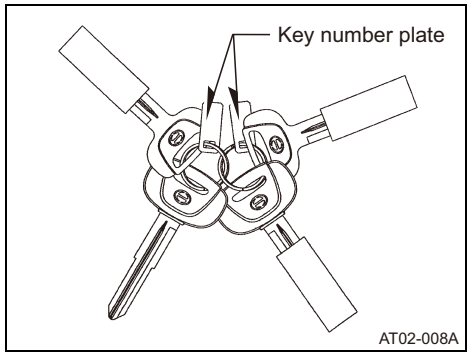


**Type 2 (If so equipped)**

**These keys work in every lock**

The same key is used for the starter switch and all of the door locks. Since the doors can be locked without a key, you should always carry a spare key in case you accidentally lock your key inside the vehicle.

**KEY NUMBER PLATE**

**Your key number is shown on the key number plate. Store the key number plate in a safe place and never leave the key number plate in the vehicle.**

If you should lose your keys or if you need additional keys, duplicates are available at your Hino dealer by referring to the key number.

We recommend writing down the key number and storing it in a safe place.

## Doors—
## —Opening and closing the doors

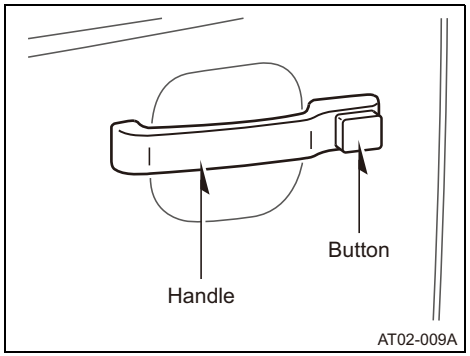


**Outside**

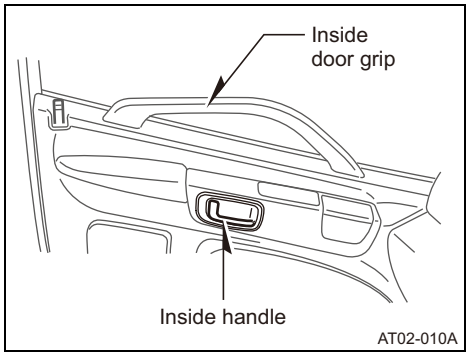


**Inside**

## —Locking and unlocking the doors

### TO OPEN

**From the outside:** Push and hold the button, on the handle, then pull the handle to open the door.

**From the inside:** Pull the inside handle. Before opening the door from the inside, be sure that there are no persons or vehicles nearby.

### TO CLOSE

**From the outside:** Hold the handle and push the door to close it.

**From the inside:** Grab the inside door grip and pull the door to close.

**⚠ WARNING**

**Use the inside door grip to close the door completely. A door that is not closed properly may open suddenly when the vehicle is moving and cause death or severe injuries. Be certain that the door is safely and completely latched when closed. Always hold doors by the handle while opening and closing.**

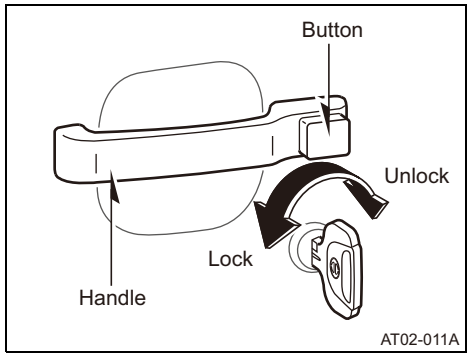


**Outside**

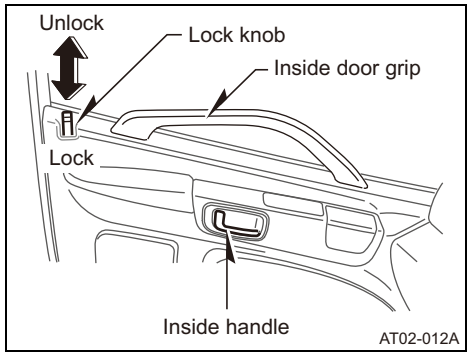


**Inside**

### TO LOCK

**From the outside:** Insert the key into the key cylinder on the driver's side door and turn the key to the left or insert the key into the key cylinder on the passenger's side door and turn the key to the right.

You can also lock the door from the inside without using the key. Push the lock knob downward before closing the door.

Then, while outside the vehicle, close the door while pushing and holding the push button of the door handle.

Always be careful not to leave the key inside the cab.

**From the inside:** Push the lock knob downward.

### TO UNLOCK

**From the outside:** Insert the key into the key cylinder on the driver's side door and turn the key to the right or insert the key into the key cylinder on the passenger's side door and turn the key to the left.

**From the inside:** Raise the lock knob upward.

### Vehicle with power door lock system (If so equipped)

The passenger's door is locked or unlocked at the same time the driver's door is locked or unlocked.

**⚠ WARNING**

**Lock all doors and wear seat belts at all times while driving. An unbelted occupant may be ejected from the cab in an accident or sudden stop, resulting in death or serious injury.**

### Keyless entry system— (If so equipped)

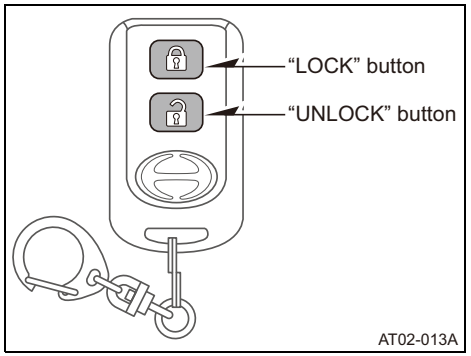


**REMOTE KEY**

**The remote key of the keyless entry system enables you to lock and unlock the door without using the key.**

Press the "**LOCK**" button to lock all doors. Press the "**UNLOCK**" button to unlock the driver's side door. Push and release the "**UNLOCK**" button and push and hold the "**UNLOCK**" button within 5 seconds to unlock the passenger's door.

The hazard lights blink indicates that the doors have been locked or unlocked. (Locked: one blink; Unlocked: two blinks)

If the cab light switch is in the "**DOOR**" position, the cab light turns on for about 20 seconds and then fades out, when pressing the "**UNLOCK**" button.

**⚠ CAUTION**

- **Do not disassemble, drop or spill water over the remote key. Doing so may cause malfunction of the remote key.**
- **Do not leave the remote key in a place where the temperature may rise excessively high {not less 140 °F (60 °C)}. Doing so may cause malfunction of the remote key and premature depletion of its battery.**
- **If the remote key does not function by pressing the button or if you lose the remote key, contact your Hino dealer.**
- **Keep the remote key away from magnetized items. Do not attach any item on the key surface that blocks electromagnetic waves.**
- **Keep the remote key away from the magnetized items, and do not attach any items that blocks radio waves on the remote key surface.**
- **Do not disassemble it unnecessarily except for battery replacement. Use of disassembled or modified remote key is against the law.**
- **Do not disassemble or modify the remote key unnecessarily except for battery replacement.**

***NOTICE:***

*Do not press the "**LOCK**" and "**UNLOCK**" button of the remote key if you bring it on the airplane, also make sure that the "**LOCK**" and "**UNLOCK**" button of the remote key is not easily pressed if you put it in a bag.*
*If "**LOCK**" and "**UNLOCK**" button is pressed, the airplane operation may be troubled by radio waves of the remote key.*

**The remote key operates in a radius of approximately 10 m (32.81 ft) from the center of the cab.**

However, practical operating distance may differ depending on the circumstances and electronic noise around the vehicle.

When you unlock the door by the remote key and you do not open the door within 30 seconds, the door will be automatically re-locked.

The remote key does not function in the following situations:

- The engine is running.
- The key is in a position other than "**LOCK**".
- Any of the doors are open.

You can have up to three remote key units. Contact your Hino dealer to purchase additional remote keys and to confirm how to start using them.

**CONDITIONS AFFECTING OPERATION**

The remote key may not properly function in the following situations.

- Near a TV tower, radio station, electric power plant, airport or other facility that generates strong radio waves.
- When the user is carrying a portable radio, cellular phone or other wireless communication device.
- When multiple remote keys are in the vicinity.
- When the remote key has come into contact with, or is covered by a metallic object.
- When a remote key of another vehicle (that emits radio waves) is being used nearby.
- When an electrical appliance such as a personal computer is being used nearby.

## —Replacing battery

**⚠ WARNING**

**Keep the removed battery and parts of the remote key out of reach of children. Accidentally swallowing of battery or parts to choking may result in death or serious injury.**

**⚠ CAUTION**

**Pay strict attention to must be given to the following precautions for proper operation of the remote key.**

- **To avoid rust, do not replace the battery with wet hands.**
- **Do not touch or move any parts other than the battery.**
- **Do not bend the electrodes.**

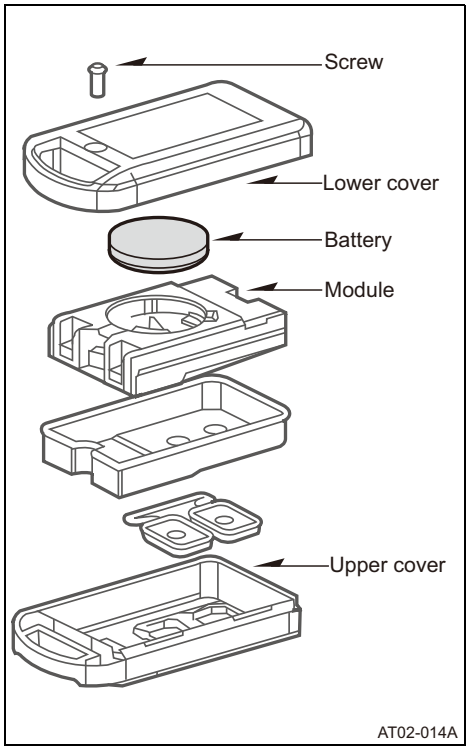

If you cannot lock or unlock the door by pressing the button of the remote key, the battery of the remote key may need to be replaced with a new battery.

**HINT:**

**Battery life may differ depending on the conditions of use.**

1. Remove the screw on the underside of the remote key and remove the lower cover.
2. Extract the module from the upper cover.

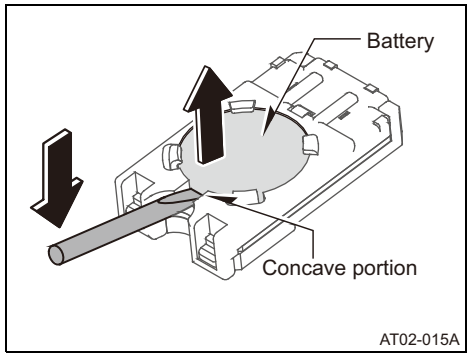


3. Insert a flat-head screwdriver to the concave portion, then remove the battery.

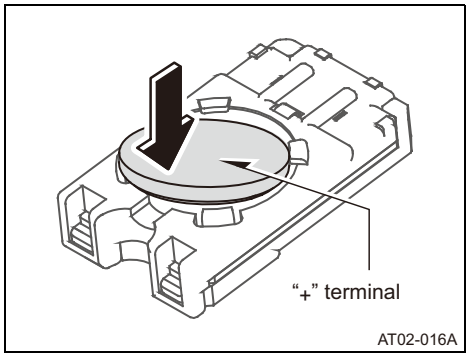


4. Insert a new battery into the module with the “+” terminal facing up.
5. Insert the module into the upper cover.

| Battery to use | Quantity |
|---|---|
| Lithium battery CR2032 | 1 piece |

6. Fix the lower cover to the upper cover by the screw.

- Discard the used battery in accordance with relevant law and regulations.
- When the remote key is lost, contact your Hino dealer.

**PERCHLORATE MATERIAL**

Special handling may apply.
See www.dtsc.ca.gov/hazardouswaste/perchlorate.
Your vehicle has components that may contain perchlorate. These components may include wireless remote control batteries.

## —For vehicles sold in U.S.A

**CERTIFICATION FOR WIRELESS REMOTE CONTROL**

**NOTE:**

This device complies with part 15 of the FCC Rules.
Operation is subject to the following two conditions:

1. this device may not cause harmful interference, and
2. this device must accept any interference received, including interference that may cause undesired operation.

***NOTICE:***
***for Receiver (WRDCE0050RX)***

*This equipment has been tested and found to comply with the limits for a Class B digital device, pursuant to Part 15 of the FCC Rules. These limits are designed to provide reasonable protection against harmful interference in a residential installation. This equipment generates, uses and can radiate radio frequency energy and, if not installed and used in accordance with the instructions, may cause harmful interference to radio communications. However, there is no guarantee that interference will not occur in a particular installation. If this equipment does cause harmful interference to radio or television reception, which can be determined by turning the equipment off and on, the user is encouraged to try to correct the interference by one or more of the following measures:*

- *Reorient or relocate the receiving antenna.*
- *Increase the separation between the equipment and receiver.*
- *Connect the equipment into an outlet on a circuit different from that to which the receiver is connected.*
- *Consult the dealer or an experienced radio/TV technician for help.*

**FCC WARNING:**

**Changes or modifications not expressly approved by U-shin could void the FCC compliance and negate your authority to operate the product.**

## —For vehicle sold in Canada

**NOTE:**

This device complies with RSS-210.

1. this device may not cause harmful interference, and
2. this device must accept any interference received, including interference that may cause undesired operation.

## —FCC Declaration of Conformity

**U-SHIN LTD.**
Shiba NBF Tower 4th Floor, 1- chome 1-30,
Shiba-Daimon,Minato-ku, Tokyo 105-0012, Japan
Phone:03-5401-4662
URL: http://www.u-shin.co.jp

FCC Declaration of Conformity

Responsible Party :

HINO MOTORS SALES U.S.A., INC.
41180 Bridge Street
Novi, MI 48375

Products :

| | |
|---|---|
| Product name : | Relay Assy , Door Control |
| Model number : | WRDCE0050RX |
| Trade name : | U-shin |

This device complies with part 15 of the FCC Rules. Operation is subject to the following two conditions: (1) This device may not cause harmful interference, and (2) this device must accept any interference received, including interference that may cause undesired operation.

Caution
Changes or modifications not expressly approved by U-shin could the FCC Compliance and negate your authority to operate the product.

## Windows

### POWER WINDOWS (IF SO EQUIPPED)

**⚠ WARNING**

**Improper use of power windows can result in serious injury or death.**

**Never allow anyone, or any part of their body, to get in the way of a power window when closing it.**

- **Never leave small children alone in the vehicle, especially if the engine is running or the key is inserted in the starter switch.**
- **Always use the window lock switch by pushing it down when children are in the vehicle.**
  **This helps to prevent children from opening or closing the power windows.**

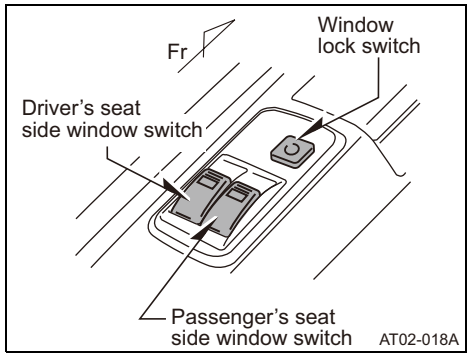


The windows can be operated with the switch on each door. The power windows work when the key is in the "**ON**" position.

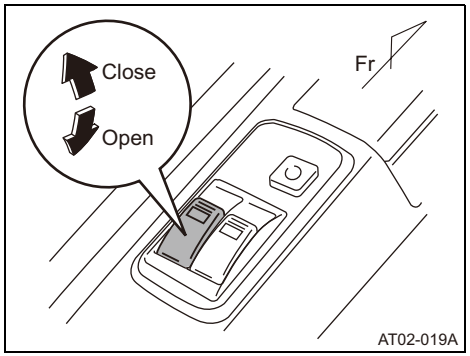


**OPERATING THE DRIVER'S WINDOW**

**Use the switch on the driver's door.**

The window moves as long as you hold the switch.

**To open:** Lightly push down the switch.
**To close:** Lightly pull up the switch.

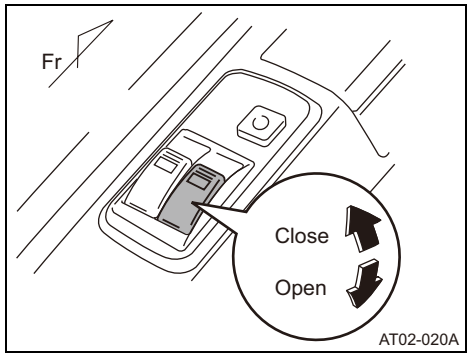


**OPERATING THE PASSENGER'S WINDOW**

**Use the switch on the passenger's door or the driver's door that controls the passenger's window.**

The window moves as long as you hold the switch.

**To open**: Lightly push down the switch.
**To close**: Lightly pull up the switch.

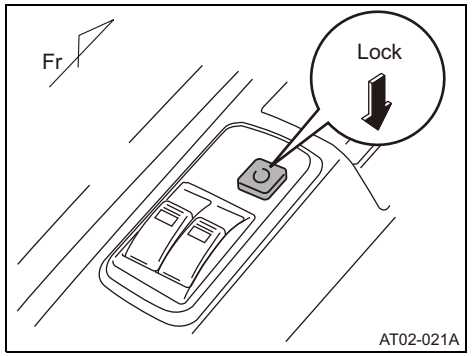


**WINDOW LOCK SWITCH**

When you push in the window lock switch on the driver's door, the passenger's window's switch is locked.

***NOTICE:***

*Be sure to keep the switch in the "**LOCK**" position when carrying a child or when not operating the window.*

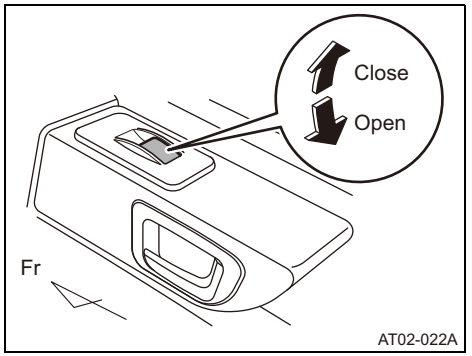


**PASSENGER'S SIDE SWITCH**

The window moves as long as you hold the switch.

**To open**: Lightly push down the switch.
**To close**: Lightly pull up the switch.

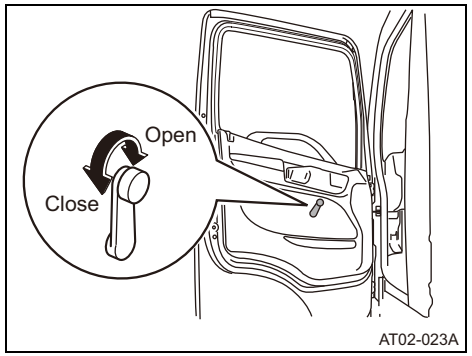


**WINDOW REGULATOR HANDLE (If so equipped)**

To lower driver's seat side window, turn window regulator handle clockwise. To raise the window, turn handle counterclockwise.

To lower passenger's seat side window, turn window regulator handle counterclockwise. To raise the window, turn handle clockwise.

## Protection against theft

You may lose both your vehicle and carrying cargo by the vehicle theft. Protection against the vehicle theft is your responsibility. To help prevent the theft of your vehicle, observe at least the following precautions when you leave the vehicle.

- Close all the windows and Lock all the doors.
- Take the key and remote key (if so equipped) with you.
- Do not leave any articles which may appear to be valuable in the cab.
- Park your vehicle in the bright place.

## Engine hood

**⚠ WARNING**

- **The engine compartment of any motor vehicle is a potentially dangerous area and can cause serious personal injury and death.**
- **Make certain there is ample space around the engine hood of the vehicle before beginning to open the hood.**
- **Never park your vehicle on a slope or hill when opening the engine hood. Raising or lowering a hood while the vehicle is parked on a slope or hill can cause damages to the vehicle and/or death or serious injury in an accident. Lowering a hood while parked on a slope or hill may prevent the hood latches from working properly. If the hood is not properly closed, it could fly up and block you view while you are driving, resulting in an accident causing death or serious personal injuries.**

- **Before opening the hood, place the gearshift lever in neutral position (for manual transmission) or place the selector lever in “P” position (automatic transmission with “P” position) or “N” position (automatic transmission without “P” position) and block all the wheels.**
- **Be sure to stop the engine before opening the hood.**
- **Make sure there are no obstacles above the hood when it is being opened.**
- **To avoid serious burns, keep away from hot metal parts such as the engine, radiator and exhaust pipe.**
- **Never lift the windshield wiper arm away from the windshield while raising or lowering the hood. Otherwise, the windshield wiper may interfere with a hood and windshield wiper or the hood could be damaged.**

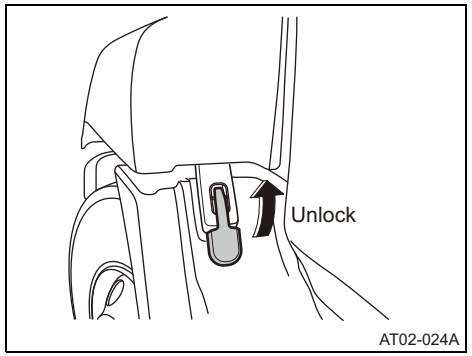


**To open the hood:**

**⚠ WARNING**

**When you open the hood, slowly lift the hood until the stopper cable is fully stretched and the hood is fixed securely at the full open position. Otherwise, the stopper cable could be severed and the food may hit you, resulting in death or serious injury.**

1. Park the vehicle on a level and safe ground.
2. Stop the engine, apply the parking brake firmly, place the gearshift lever in neutral position (for manual transmission) or place the selector lever in “**P**” position (automatic transmission with “**P**” position) or “**N**” position (automatic transmission without “**P**” position) and remove the key.
3. Block all the wheels so that the vehicle does not move.
4. Pull up the right and left hood latches to release the hood (lock).
5. Stand in front of the vehicle and lift up the hood towards the front of the vehicle using the hood grip.

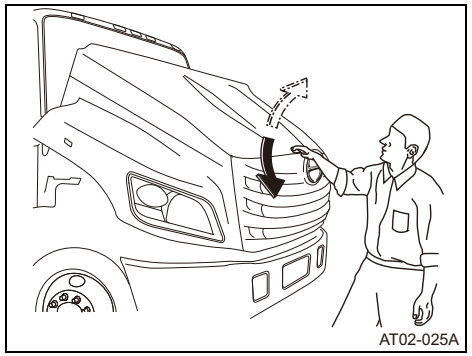
AT02-025A

**To close the hood:**

**⚠ WARNING**

- **If the engine is running, stop the engine before closing the engine hood.**
- **For safe operation, be sure that the torsion bar and shock absorber is adjusted properly. Otherwise, the hood may come down with great force.**
- **Before closing the hood, make sure that there is no one around the engine or underneath the engine hood. Otherwise, anyone near the engine or hood could be caught in the hood while it is being closed, resulting in death or serious injury.**
- **Make sure that hand tools, gloves, waste, etc. are not left on or around the engine before the engine hood is closed.**

1. Firmly hold the hood.
2. Close the hood slowly.
3. Lock the both right and left hood latches.

**⚠ WARNING**

- **Never allow anyone to get in the way of the engine hood when it is closing.**
- **Be sure to confirm that both hood latches are fully hooked before operating the vehicle. If the hood is not properly closed, it could fly up and block you view while you are driving, resulting in an accident causing death or serious personal injuries.**
- **If you realize that the engine hood latches are not properly secured when the vehicle is moving, safely stop as soon as possible and close the engine hood.**

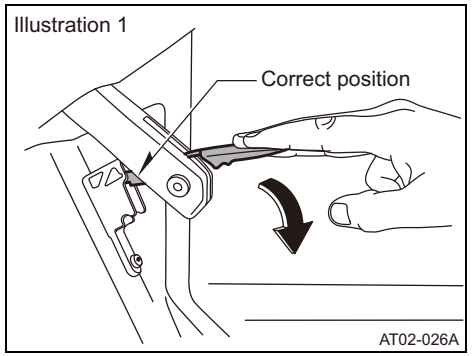


**Correct position**

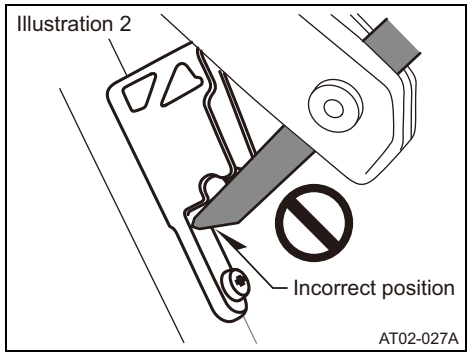


**Incorrect position**

**⚠ WARNING**

- **When securing the hood latches, make sure to hook the base of the hood latch to the correct position. (Illustration 1)**
- **Improper hook of the base of the hood latch may cause damage to the hood latch and/or latch base, which can result in death or serious injury in an accident. (Illustration 2)**

H1-A038E01.book 25 ページ ２０１６年１０月１９日 水曜日 午後５時２６分

# SECTION 2 – 3

## OPERATION OF INSTRUMENTS AND CONTROLS

### Seats, Seat belts, Steering wheel and Mirrors

Seats ..... 2-26
Driver’s seat ..... 2-26
Seat belts ..... 2-29
Steering wheel ..... 2-49
Outside rear view mirrors ..... 2-51

Read the entire manual before using vehicle. Failure to follow instructions, warnings and safety precautions could result in death, serious injury and/or damage to the vehicle.

## Seats

While the vehicle is being driven, the driver and all passengers in the vehicle must sit upright, well back in the seat, and properly wear the seat belt provided at each seat position.

**⚠ WARNING**

- **Improper seating positions increase the risk of severe injuries or death in a crash, other accident or after a short stop.**
- **All vehicle occupants must be properly seated and properly restrained with a seat belt at all times.**
- **Never drive the vehicle unless all occupants are properly seated.**
- **Never allow any occupant to stand up or move around while the vehicle is moving.**
- **Always keep your feet on the floor in front of the seat. Never rest your feet on the seat, on the instrument panel, or out of the window. The vehicle's restraint system will not be to protect you properly, and can even increase the risk of injury or death in an accident or crash if you are not properly seated.**

## Driver's seat— —Seat adjustment precautions

Adjust the driver's seat so that the foot pedals, steering wheel and instrument panel controls are within easy reach of the driver.

**⚠ WARNING**

- **Improper adjustment of the driver's seat can result in accidents causing severe injuries or death.**
- **Never adjust the driver's seat while the vehicle is moving. The seat could move unexpectedly resulting in loss of control of the vehicle, or could result in an incorrect seating position.**
- **After adjusting the seat position, release the seat position adjusting lever and try sliding the seat forward and backward to make sure the seat is locked in position.**

- **After adjusting the seatback, also push your body back against the seat to make sure the seat is locked in position.**
- **Never put objects under the seat. Such objects may interfere with the seat-lock mechanism or unexpectedly push up the seat position adjusting lever resulting in the seat moving suddenly, and causing the driver to lose control of the vehicle.**
- **While adjusting the seat, do not put your hands under the seat or near the moving mechanism. Otherwise, your hands or fingers may be caught and injured.**

## —Adjusting driver's seat

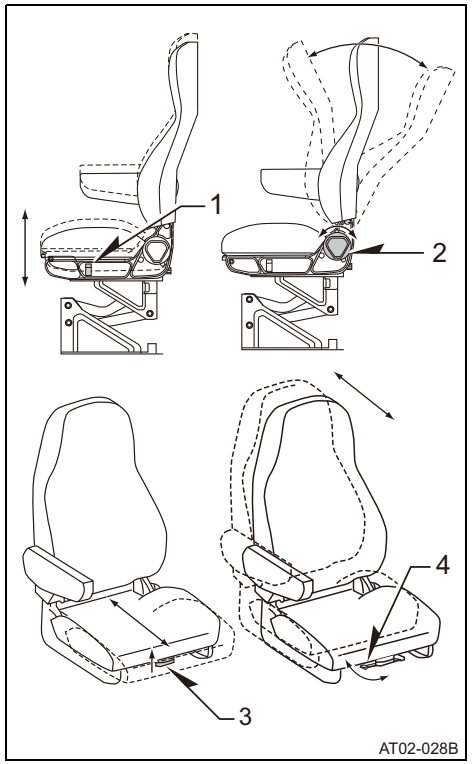


**⚠ WARNING**

**Never adjust the driver's seat while the vehicle is moving. The seat could move unexpectedly resulting in loss of control of the vehicle, or could result in an incorrect seating position.**

**1. SEAT HEIGHT ADJUSTING SWITCH (Driver's seat only)**

**Push the switch up to raise the seat automatically to the desired position. Push the switch down to lower the seat automatically to the desired position. Release the switch to lock the seat position selected.**

**2. SEAT BACK ANGLE KNOB**

**Turn the knob beside the seat frontward to recline the seat frontward to the desired angle. Turn the knob beside the seat backward to recline the seat backward to the desired angle.**

H1-A038E01.book 28 ページ ２０１６年１０月１９日 水曜日 午後５時２６分

### 3. CUSHION ADJUSTING

**To adjust the cushion position, pull the seat cushion upward. Underneath the cushion is a handle which should be used to slide the cushion forward or rearward to the desired seating position. When the cushion is in the desired position, push down on the seat cushion to lock.**

### 4. SEAT POSITION ADJUSTING LEVER (Driver's seat only)

**Pull the lever forward and while holding it, slide the seat forward or backward to the desired position. Release the lever to lock.**

After this adjustment, try to move the seat forward and backward to make sure that it is locked securely.

**⚠ WARNING**

**Never recline the seatbacks any more than needed. The farther the seatbacks are reclined backward, the greater the risk of injury caused by incorrect positions of the seat belts and improper seating position.**

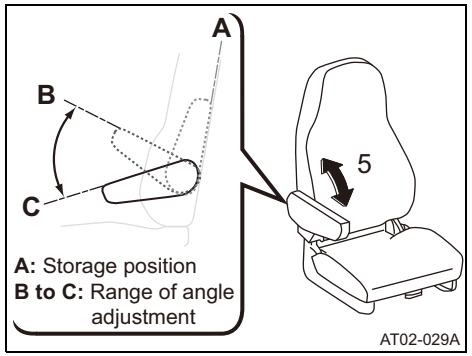


### 5. ARMREST (Driver's seat only)

**The angle of the driver's armrest can be adjusted. The armrest angle can be adjusted to any point between "B" and "C" as shown on the above illustration.**

"**B**" position is the upper limit. To lower the armrest, lift it up to "**B**" position where you hear a click sound. Then you can lower the armrest to the desired position down to "**C**" position. When the armrest is at "**A**" position and you want to adjust it, lower the armrest down to "**C**" position where you hear a click sound and then adjust the armrest to the desired position.

## Seat belts—

Occupants must always wear a seat belt when the vehicle is moving. The failure to wear a seat belt, or wearing a seat belt which is improperly positioned, increases the risk to the occupant of severe personal injury or death in the event of a sudden stop or an accident. This section provides warnings and information with respect to the use of seat belts by adults, children, persons with physical impairments and expectant mothers, as well as the maintenance and replacement of seat belt, which must be read and heeded. This section also contains very important information about the use of child and infant restraint systems, which are used in conjunction with seat belts. Not all child and infant restraint systems can be used with this vehicle. Detailed warnings and information about child and infant restraint systems may be found beginning at page 2-36.

**⚠ WARNING**

**Always wear a seat belt when the vehicle is moving. Failure to wear a seat belt, or wearing a seat belt which is improperly positioned increases the risk of severe personal injury or death in the event of a sudden stop or an accident.**

- **Every person in the vehicle must be properly seated on his or her own seat, must fasten the seat belt belonging to that seat properly before the vehicle starts to move, and must keep the seat belt properly fastened while the vehicle is moving.**
- **Each seat belt must be used by one person only. Never use a single belt for two or more people.**
- **Always secure children in the vehicle with the restraint system appropriate for the age, height and weight of each child. See page 2-36.**
- **Never recline the seatbacks any more than needed. The father the seatbacks are reclined backward, the greater the risk of injury caused by incorrect positions of the seat belts and improper seating position.**
- **Expectant mothers must always wear the lap portion of the seat belt as low as possible across the pelvis and below the abdomen.**
- **Damage to seat belts reduces their overall effectiveness and increases the risk of serious personal injury and death when the vehicle is being used.**
- **Never allow the seat belt webbing or hardware to be damaged. Do not let the webbing or hardware get caught or pinched in the seats or doors.**

- **Inspect the seat belt system for damage regularly. Check for cuts, tears, fraying, and loosened parts. Damaged seat belts can break in an accident. Damaged and loosened parts should be replaced by your Hino dealer. Never disassemble or modify the system.**
- **Keep the belts clean and dry. If the belts need cleaning, use a mild soap solution or lukewarm water. Never use bleach, dye, or abrasive cleaners since they may severely weaken the belts. See "Cleaning the interior" on page 5-2.**
- **Replace the seat belt assembly (including bolts) if the vehicle is involved in a severe accident. The entire assembly should be replaced even if damage is not visible.**
- **Damaged seat belts cannot be repaired and must be replaced.**

- **Always secure children in the vehicle with a restraint system that is permitted to be used with this vehicle as well as a restraint system appropriate to the child's age, weight and height. See page 2-36.**
- **All vehicle occupants, including children and babies, must be properly restrained whenever riding in a vehicle. An unrestrained or improperly restrained child could be injured or killed by striking the interior of being ejected from the vehicle during a sudden maneuver or accident.**
- **Never allow children or babies to ride sitting on an occupant's laps and never place a seat belt over a child sitting on an occupant's lap.**
- **Never allow a child to stand up or kneel on the seats when the vehicle is moving.**

**Expectant mothers.** Like all occupants, an expectant mother should wear a seat belt. Ask your doctor for any specific recommendations. The lap belt should be worn securely and flat, as low as possible across the pelvis and below the abdomen during the pregnancy. It should not be worn on the waist.

**Persons with Physical Impairments.** If a physical impairment or medical condition prevents someone from sitting properly on the seat with the seat belt properly fastened, medical advice should be sought.

**⚠ WARNING**

**Always wear a seat belt when the vehicle is moving. Failure to wear a seat belt, or wearing a seat belt which is improperly positioned increases the risk of severe personal injury or death in the event of a sudden stop or an accident. Read and follow all seat belt instructions.**

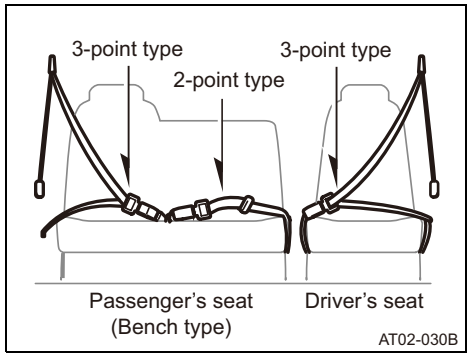


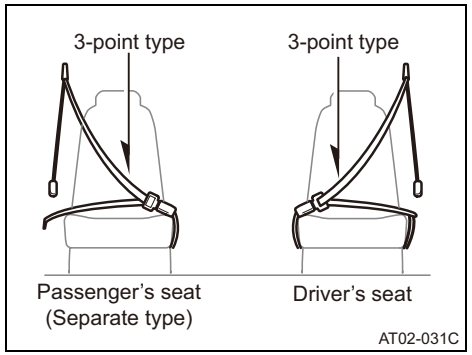


### —3 point type seat belts

The driver's seat and the outboard passenger seat are equipped with a three point seat belt with an Emergency Locking Retractor ("ELR").

- **Before driving, always buckle your seat belt. Pull out the seat belt out of the retractor slowly and then fasten it. If your seat belt does not pull out from the retractor, and buckle easily, it may be twisted inside the seat belt guide of the retractor because of the way it was retracted when it was last taken off. Untwist the seat belt and slowly return the belt to the retractor. Then again pull out the seat belt out of the retractor slowly and fasten it.**

- **If your seat belt is properly worn, it will expand and contract freely, according to the movement of your body. The seat belts of both the driver and the outboard occupant will hold the occupants in their seats, and provide protection in case of braking, a collision or other accident or impact. Seat belts attach passengers to the vehicle.**

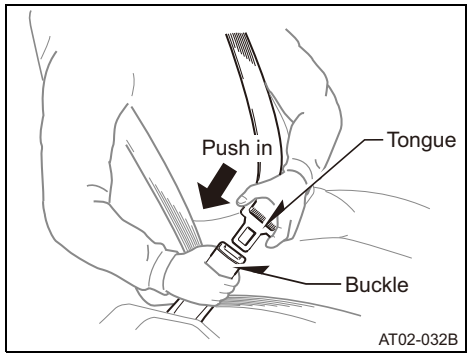


**The seat belt length will be adjustable depending upon your size and the seat position.**

**Adjust each seat as needed and sit up straight and well back in the seat.**

**Hold the seat belt by the tongue and pull it slowly across the chest and the pelvis. Never twist the seat belt webbing. Then insert the tongue into the buckle.**

**You will hear a click sound when the tongue locks into the buckle.**

**Pull on the seat belt to make sure it is securely buckled.**

The retractor will retract the seat belt during a sudden stop or on impact. A slow, easy motion will allow the belt to extend.

**⚠ WARNING**

- **After inserting the metal tongue of the seat belt latch plate, make sure the metal tongue and buckle are locked and that you have heard a click sound, and that the lap and shoulder portions of the belt are not twisted.**
- **Never insert coins, clips, etc. in the buckle as this may prevent you from properly latching the metal tongue and buckle.**
- **If the seat belt does not work properly, it cannot protect occupants from death or serious injury. Contact your Hino dealer immediately. Do not operate the vehicle until the seat belt is repaired.**

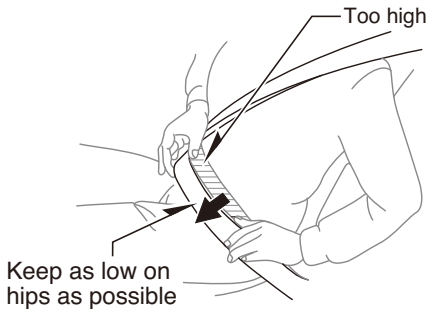


**Adjust the position of the lap and shoulder belts.**

Position the lap belt as low as possible over your hips, then adjust it to be fitted by pulling the shoulder portion upward.

**⚠ WARNING**

- **Improperly positioned seat belts can cause death or serious personal injury from a sudden stop or in an accident.**
- **Loose-fitting seat belts could cause serious injuries by allowing your body to slide under the lap belt part of your seat belt during a sudden stop or accident.**
- **Always keep the lap belt part of your seat belt positioned as low on your pelvis as possible. The lap belt should never rest on the abdomen.**
- **The shoulder belt part of your seat belt should be positioned over the middle of the shoulders. It should never be work across the neck or throat and never under your arm.**
- **Never release the seat belt while the vehicle is moving.**

### —2-point type (If so equipped)

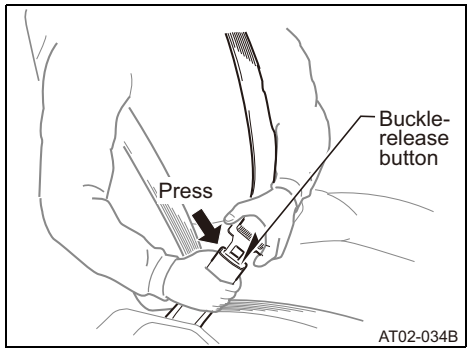


**To release the seat belt, press the buckle-release button and allow the seat belt to be retracted.**

If the seat belt is not fully retracted, pull it out and check for kinks or twists. Then retract it again so that it may remain untwisted as it retracts.

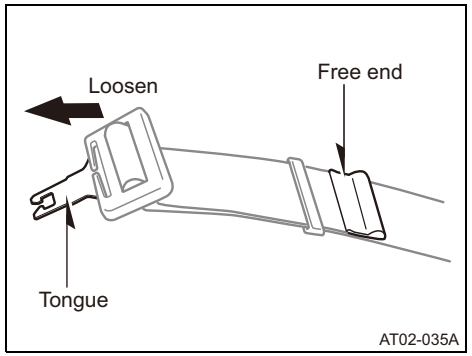


**Sit up straight and well back in the seat. To fasten your seat belt, insert the tongue into the buckle.**

You will hear a click sound when the tongue locks into the buckle.

If the belt is not long enough for you, hold the tab at a right angle to the belt and pull on the tab.

**⚠ WARNING**

- **After inserting the metal tongue on the seat belt latch plate into the buckle, make sure the metal tongue and buckle are locked and that the lap belt is not twisted.**
- **Never insert coins, clips, etc. into the buckle as this may prevent you from properly latching the metal tongue and buckle.**
- **If the seat belt does not work properly, it cannot protect occupants from death or serious injury. Contact your Hino dealer immediately. Do not operate the vehicle until the seat belt is repaired.**

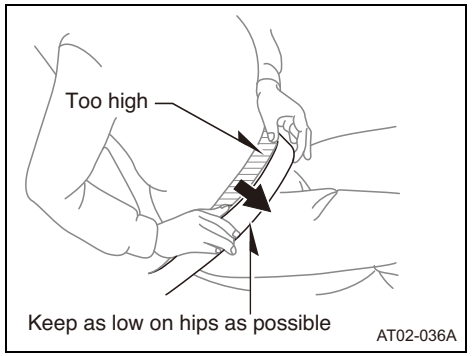


**Tighten the lap belt if it is too loose.**

To tighten the belt, pull the free end of the belt.

Position the lap belt as low as possible over your pelvis, then adjust it to a snug fit.

**⚠ WARNING**

- **Improperly positioned seat belts can cause death or serious personal injury from a sudden stop or in an accident.**
- **A loose-fitting lap belt could cause serious injuries by allowing your body to slide under the belt during a sudden stop or accident.**
- **Always keep your lap belt positioned as low on your pelvis as possible. The lap belt should never rest on the abdomen.**
- **Never release the seat belt while the vehicle is moving.**

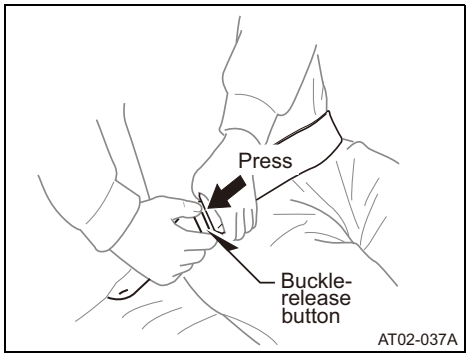


**To release the belt, press the buckle-release button.**

## —Child restraints

A child's body is not fully developed and as a result, child restraint systems specially designed for a child's age, height, weight and body structure must be used.

**Important:**

**All states of the United States, and the District of Columbia, as well as Canada and all provinces of Canada have laws applicable to the approved type of child restraint system which may be used for infants and small children of a particular ages, heights and weights, and the vehicle seating positions in which the child restraint system may or may not be used.**

**Always be sure to check your state, province or local and national law to make certain that you are following the laws of the location where you are driving the vehicle using a child restraint system.**

**Always consult the instructions supplied by the infant or child seat manufacturer to make absolutely certain that the child restraint system is right for your infant or child.**

Be certain to read and heed all of the important information and WARNINGS about the installation of child restrains in this manual.

Some child restraint systems are designed to be used only with a tether hook and lower anchor hooks and some are not. This vehicle does not have a tether and lower anchors to secure a child restraint system. Child restraint systems which require the use of a tether and lower anchors cannot be safely secured in this vehicle. Never use a child restraint system which requires a tether and lower anchors in this vehicle.

Child restraint systems which do not require tethers and lower anchors may be used in this vehicle.

You must use the seat belts provided with this vehicle to secure your child restraint system in this vehicle.

When securing a child restraint system using the seat belts, see installation instructions provided by the child restraint system manufacturer and the following warnings and instructions in this manual.

**⚠ WARNING**

- **ALWAYS restrain any child age 12 or under in a child restraint that is appropriate for the child's age, height and weight. A suitable child restraint properly installed and used provides the highest degree of protection for infants and small children in most accident situations.**
- **Never hold a child on your lap. Holding a child in your arms is not a substitute for a child restraint system. In an accident, the child can be crushed against the windshield and dashboard, or between you and the vehicle's interior.**
- **Never place the same seat belt around you and a child.**
- **Make sure that you have complied with all installation instructions provided by the child restraint system manufacturer and that the system is properly secured. Do not use a child restraint system if it cannot be properly installed in accordance with the installation instructions provided by its manufacturer.**
- **If the child restraint system is not secured properly, death or serious injury to the child or other passengers may result in the event of a sudden stop or an accident.**
- **Make sure that the child restraint system is securely installed by pushing and pulling it in all directions after securing it with the vehicle's seat belt to the vehicle's front seat. If the child restraint system is not secured properly death or serious injury to the child or other passengers may result in the event of a sudden stop or an accident.**
- **Never use a child restraint system requiring a top tether hook and/or lower anchors to secure the child restraint system to the vehicle's seat. Your vehicle's seat does not have any lower anchors or a top tether anchor to secure the child restraint system to the vehicle's seat. Such child restraint systems cannot be safely secured and its use could cause death or serious injury to the child or other passengers in the event of a sudden stop or an accident.**

- **Never install a rear-facing infant seat (including a rear-facing positioned convertible seat) or a booster seat in the center seat of this vehicle (if your vehicle has a center seat). A rear-facing infant seat or a booster seat cannot be secured properly, and death or serious injury to the child or other passengers may result in the event of a sudden stop or accident. A rear-facing child seat or a booster seat may be used only with a lap and shoulder belt in the outboard seating position.**

In the United States, the National Highway Traffic Safety Administration (“NHTSA”) provides general guidelines for the type of restraint appropriate for children of certain ages, height and weight on its website at www.nhtsa.dot.gov.

The NHTSA website also provides other information regarding the installation of child restraints and the locations of State/Local Installation Stations.

In Canada, Transport Canada/Canada Transport provides information about keeping children safe on its website www.tc.gc.ca/eng/menu.htm

### —Installation of child restraint system

**1. Installation with 3-point type seat belt (Outboard Seat)**

**⚠ WARNING**

- **Unless you have a seat belt locking clip designated by the manufacturer of the child restraint system (except for a booster seat), use the child restraint system only in the center seat (if your vehicle has a center seat). Otherwise, the seat belt will not secure the child restraint system, which could cause death or serious injury to the child or other passengers in the event of a sudden stop or an accident.**

**● A rear-facing child seat (including a rear-facing positioned convertible seat) or a booster seat may be used only with a lap and shoulder belt on the outboard seating position. Never install a rear-facing infant seat or a booster seat on the center seat of this vehicle (if your vehicle has a center seat). A rear-facing infant seat or a booster seat cannot be safely secured on the center seat of this vehicle, and death or serious injury to the child or other passengers may result in the event of a sudden stop or an accident.**

For installation of a child restraint system (except for a booster seat) on the outboard seat of this vehicle, a seat belt locking clip is required. Locking clips are usually obtained where child restraint systems are sold.

If you do not have a seat belt locking clip, then use the child restraint system only in the center seat (if your vehicle has a center seat).

### —Installation Procedure

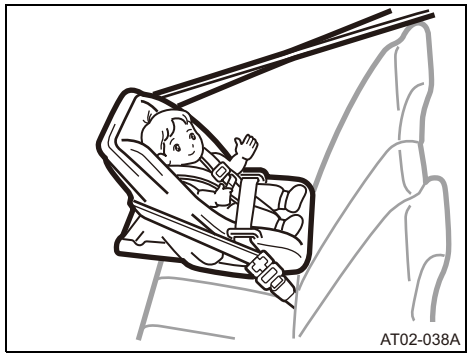


#### (A) REAR-FACING INFANT SEAT INSTALLATION

**An infant seat must be used in the rear-facing position only.**

In the United States, the NHTSA recommends use of a rear facing infant seat for infants from birth to at least one year of age and to at least 20 pounds in weight. Be sure to check your local laws for the age, height and weight of child appropriate for an infant rear facing child seat.

**When installing the rear facing infant seat, follow the child restraint system manufacturer's instruction about the applicable child's age, height and weight as well as its directions for installing the child restraint system.**

The outboard seat position of your vehicle has a lap and shoulder belt equipped with an Emergency Locking Retractor (ELR). A seat belt equipped with an ELR requires a locking clip to install a child restraint system (except for a booster seat).

**⚠ WARNING**

- **An infant should only ride when facing the rear of the vehicle.**
- **After inserting the metal tongue of the seat belt latch plate into the seat belt buckle, make sure the metal tongue and buckle are locked and that the lap and shoulder portions of the belt are not twisted.**
- **Never insert coins, clips, or other items in the buckle as this may prevent you from properly latching the metal tongue and buckle.**
- **If the seat belt does not work properly, it cannot protect your child from death or serious injury in an accident. Contact your Hino dealer immediately. Do not install the child restraint system on the seat until the seat belt is repaired.**

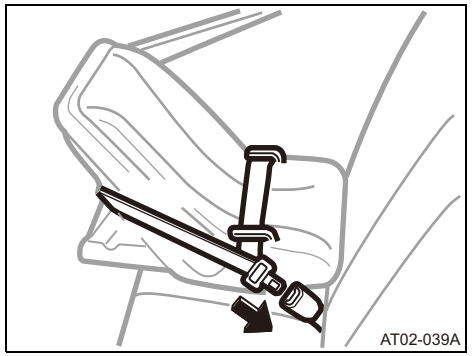
AT02-039A

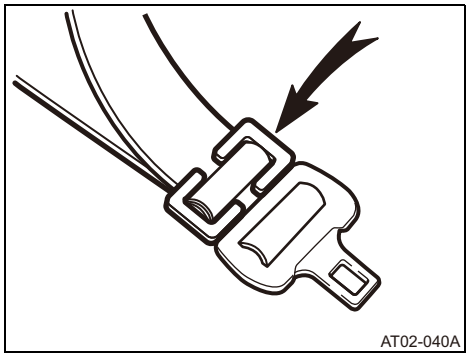
AT02-040A

**To install a rear facing infant seat:**

1. Run the lap and shoulder belt through or around the infant seat following the instructions provided by its manufacturer. Insert the metal tongue of the seat belt latch plate into the seat belt buckle, taking care not to twist the belt. Pull any slack out of the lap portion of the belt so that the base of the child restraint is tight against the vehicle seat. Hold the lap and shoulder belt webbing at the latch plate in that position, and release the buckle.
2. Keep holding the lap and shoulder belt webbing together, install a seat belt locking clip near the latch plate of the lap and shoulder belt and thread the lap and shoulder webbing through the locking clip as depicted in the instructions which accompany the seat belt locking clip. Buckle the belt again. If the belt has any slack, release the buckle and restart from step “1”.

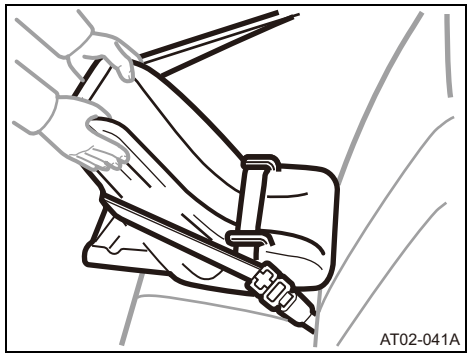
AT02-041A

**⚠ WARNING**

**Push and pull the child restraint system in different directions to be sure it is secure after securing it with the vehicle's seat belt to the vehicle's seat. Follow all the installation instructions provided by the child restraint system manufacturer.**

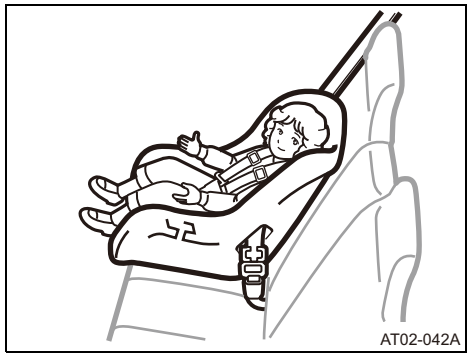
AT02-042A

**(B) FORWARD-FACING CHILD SEAT INSTALLATION**

**A forward facing child seat must be used in a forward- facing position only.**

In the United States, the NHTSA recommends use of a forward-facing child seat for toddlers from at least one year of age and weighing at least 20 pounds to about 4 years of age and weighing 40 pounds. Be sure to check your local laws for the age, height and weight of children appropriate to be seated in a forward-facing child seat.

**When installing, follow the child restraint system manufacturer's instruction about the applicable child's age, height and weight as well as directions for installing the child restraint system.**

The outboard seating position of your vehicle has a lap and shoulder belt and is equipped with an Emergency Locking Retractor (ELR). A seat belt equipped with an ELR belt requires a locking clip to install a forward-facing child restraint system (except for a booster seat).

**⚠ WARNING**

- **After inserting the metal tongue of the seat belt latch plate, make sure the metal tongue and buckle are locked and that the lap and shoulder portions of the belt are not twisted.**
- **Do not insert coins, clips, or other items in the buckle as this may prevent you from properly latching the metal tongue and buckle.**
- **If the seat belt does not work properly, it cannot protect your child from death or serious injury in an accident. Contact your Hino dealer immediately. Do not install the child restraint system on the seat until the seat belt is repaired.**

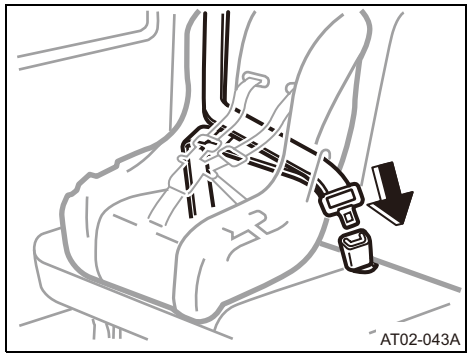


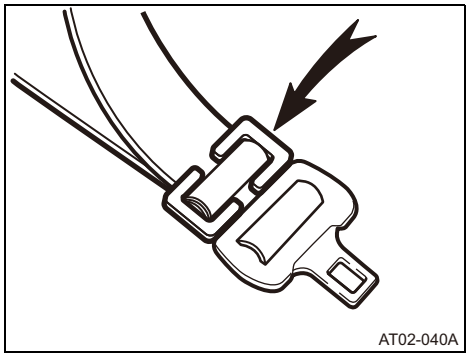


**To install a forward-facing child seat:**

1. Run the lap and shoulder belt through or around the forward-facing child seat following the instructions provided by its manufacturer. Insert the metal tongue of the seat belt latch plate into the seat belt buckle, taking care not to twist the belt. Pull any slack out of the lap portion of the belt so that the base of the child restraint is tight against the vehicle seat. Hold the lap and shoulder belt webbing at the latch plate in that position, and release the buckle.
2. Keep holding the lap and shoulder belt webbing together, install a seat belt locking clip near the latch plate of the lap and shoulder belt and thread the lap and shoulder webbing through the locking clip as depicted in the instructions which accompany the seat belt locking clip. Buckle the belt again. If the belt has any slack, release the buckle and restart from step “1”.

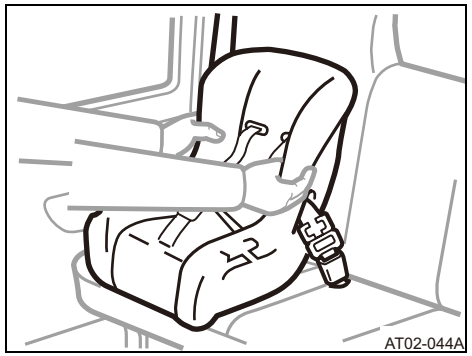
AT02-044A

**⚠ WARNING**

**Push and pull the child restraint system in different directions to be sure it is secure after securing it with the vehicle's seat belt to the vehicle's seat. Follow all the installation instructions provided by the child restraint system manufacturer.**

**(C) CONVERTIBLE SEAT INSTALLATION**

**On the outboard seat of this vehicle, a convertible seat may be used in a forward-facing or a rear-facing position depending on the age, height and weight of the child.**

**When installing, follow the manufacturer's instructions about the applicable age, height and weight of the child as well as directions for installing the child restraint system.**

**⚠ WARNING**

**Never install a convertible seat in rear-facing position on the center seat of this vehicle (if so equipped). The seat cannot be safely secured, and death or serious injury to the child or other passengers may result in the event of a sudden stop or an accident.**

See instructions and warnings for installing rearward-facing and forward-facing child seats on the outboard seat of this vehicle, above.

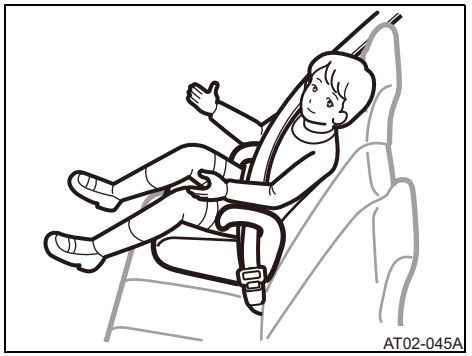
AT02-045A

**(D) BOOSTER SEAT INSTALLATION**

**A booster seat is used in a forward-facing position only.**

In the United States, the NHTSA recommends use of a booster seat and lap and shoulder belt for children from about 4 years of age and weighing 40 pounds to about 8 years of age and to a height of 4 feet 9 inches. Be sure to check your local laws for the age, height and weight of child appropriate for a booster seat.

**When installing, follow the child restraint system manufacturer's instruction about the applicable child's age, height and weight as well as directions for installing the child restraint system.**

**⚠ WARNING**

**Never use a locking clip when you install a booster seat. The seat belt cannot safely secure the child and the booster seat, and death or serious injury to the child or other passengers may result in the event of a sudden stop or an accident.**

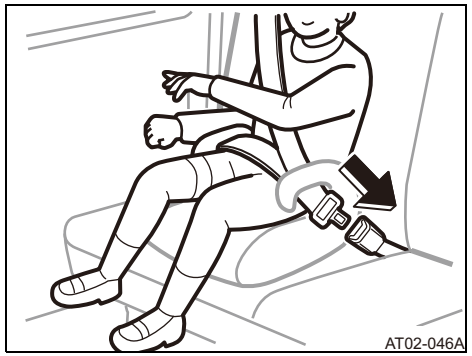


**To install the booster seat:**

Place the booster seat in the outboard seat position. Sit the child on the booster seat. Run the lap and shoulder belt through or around the booster seat following the instructions provided by its manufacturer. Insert the metal tongue of the seat belt latch plate into the seat belt buckle, taking care not to twist the belt.

**⚠ WARNING**

**To avoid the possibility of death or serious injury:**

- **Make sure the lap belt is positioned on the child's upper thighs. The lap belt should not be positioned on the top of the child's hips or across the child's abdomen.**
- **Make sure the shoulder belt is positioned correctly across the child's chest. The shoulder belt should cross the middle of the child's collarbone. It should not be positioned against the child's neck or off the child's shoulder.**
- **If the lap and shoulder belt cannot be properly positioned on the child in a booster seat then the child should be placed in a forward-facing child seat.**

- **Always make sure the shoulder belt is positioned across the center of child's collarbone. The belt should be kept away from child's neck, but not falling off the child's shoulder. Failure to do so could reduce the amount of protection in an accident and cause death or serious injuries in a collision.**
- **Both high-positioned lap belts and loose-fitting belts could cause serious injuries due to the child sliding under the lap belt during a sudden stop or an accident. Keep the lap belt positioned on the child's upper thighs.**
- **Never place the shoulder belt under the child's arm or behind the child's back.**
- **After inserting the metal tongue of the latch plate into the seat belt buckle, make sure the tongue and buckle are locked and that the lap and shoulder portions of the belt are not twisted.**
- **Do not insert coins, clips, or other items in the buckle as this may prevent you from properly latching the metal tongue and buckle.**
- **If the seat belt does not work properly, it cannot protect your child from death or serious injury. Contact your Hino dealer immediately. Do not install the child restraint system until the seat belt is repaired.**

**2. Installation of a 2-point type seat belt on the Center Seat (If so equipped)**

**⚠ WARNING**

- **Never install a child restraint system of any type on the center seat if it prevents you from operating the gearshift lever or other vehicle controls.**
- **Never install a rear-facing infant seat (including a rear-facing positioned convertible seat) or a booster seat, on the center seat of this vehicle (if so equipped). A rear-facing infant seat or a booster seat cannot be safely secured on the center seat, and death or serious injury to the child or other passengers may result in the event of a sudden stop or an accident. A rear-facing child seat or a booster seat may be used only with a lap and shoulder belt on the outboard seating position.**

When securing a child restraint system with the 2-point seat belt of the center seat, pull the excess webbing through the belt's adjustment feature, then take the following steps:

1. Once installed, ensure that the child restraint system is securely installed by pushing and pulling it in all directions after the child seat has been secured to the seat by the lap belt. If it comes loose, turn the end of the seat belt with the adjustment feature over before re-buckling. The seat belt buckle should not be against the child restraint.
2. If the child restraint system is still not secured, install the child restraint system on the outboard seat in this vehicle.
   The outboard seat position of your vehicle has a lap and shoulder belt equipped with an Emergency Locking Retractor (ELR). A seat belt equipped with an ELR requires a locking clip to install a child restraint system (except for a booster seat) See page 2-38.

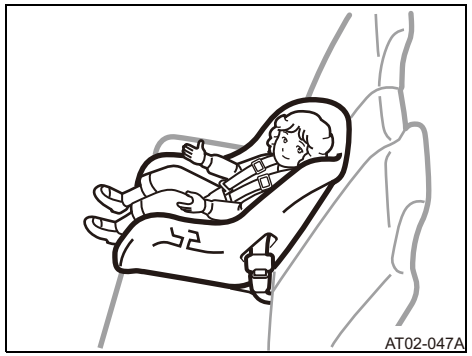


**(A) FORWARD-FACING CHILD SEAT INSTALLATION**

**A forward facing child seat must be used in a forward- facing position only.**

In the United States, the NHTSA recommends use of a forward-facing infant seat for toddlers from at least one year of age and weighing at least 20 pounds to about 4 years of age and weighing 40 pounds. Be sure to check your local laws for the age, height and weight of the child appropriate for a forward-facing child seat.

**When installing, follow the child restraint system manufacturer's instruction about the applicable child's age, height and weight as well as directions for installing the child restraint system.**

**⚠ WARNING**

- **After inserting the metal tongue of the latch plate into the seat belt buckle, make sure the tongue and buckle are locked and that the lap belt is not twisted.**
- **Do not insert coins, clips, or other items in the buckle as this may prevent you from properly latching the tongue and buckle.**
- **If the seat belt does not function normally, it cannot protect your child from death or serious injury in an accident. Contact your Hino dealer immediately. Do not install the child restraint system on the seat until the seat belt is fixed.**

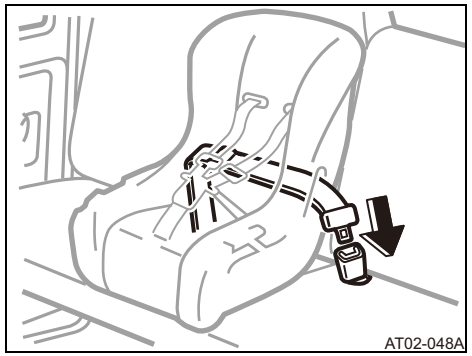
AT02-048A

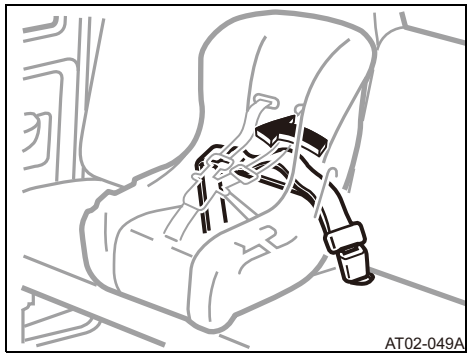
AT02-049A

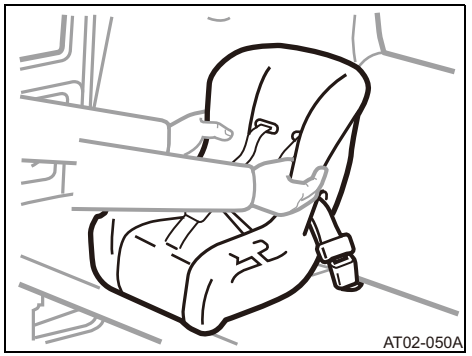
AT02-050A

**To install a forward-facing child seat:**

1. Run the center lap belt through or around the forward facing seat following the instructions provided by its manufacturer. Insert the metal tongue of the seat belt latch plate into the seat belt buckle taking care not to twist the lap belt.
2. While pressing the forward facing child seat firmly against the seat cushion and seatback, tighten the lap belt by pulling its free end to hold the forward facing child seat securely.

**⚠ WARNING**

**Push and pull the forward facing child restraint system in different directions to be sure it is secure after securing it with the lap belt to the vehicle's seat. Follow all the installation instructions provided by its manufacturer.**

**(B) CONVERTIBLE SEAT INSTALLATION**

**On the center seat of this vehicle, a convertible seat may be used in a forward facing position only. When installing, follow the manufacturer's instructions about the applicable age, height and weight of the child as well as directions for installing the child restraint system.**

**⚠ WARNING**

**Never install a convertible seat in rear-facing position on the center seat of this vehicle. The convertible seat cannot be safely secured, and death or serious injury to the child or other passengers may result in the event of a sudden stop or an accident.**

**To install the convertible seat:**

See instructions and warnings for installing forward facing child seats on the center seat, at page 2-45.

**⚠ WARNING**

**When a child restraint system is not in use:**

- **Keep a child restraint system properly secured with a seat belt if it is on the seat even if it is not in use. Do not store a child restraint system unsecured in the cabin.**
- **Otherwise, remove the child restraint system from the vehicle. This will prevent an unsecured child restraint system from injuring passengers in the event of a sudden stop or an accident.**

**—Removal of child restraint systems**

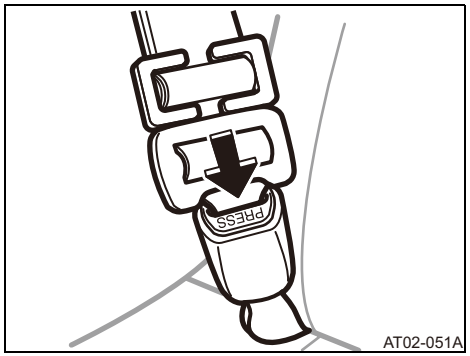


**3-point type seat belt with locking clip (Outboard Seat)**

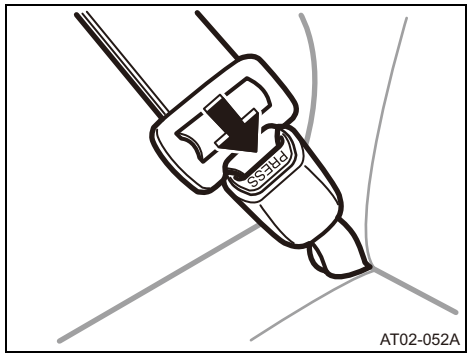


**3-point type seat belt without locking clip (Outboard Seat)**

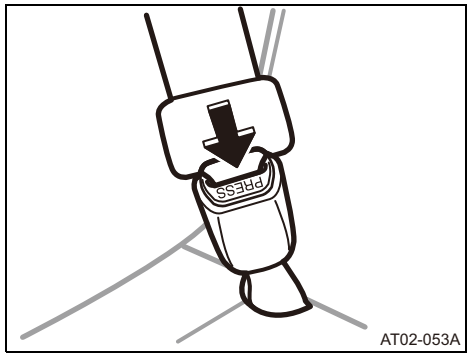


**2-point type seat belt (If so equipped)**

To remove the child restraint system, press the buckle-release button and allow the belt to retract completely.

**⚠ WARNING**

**Always remove the locking clip from the seat belt when the child restraint system is not installed.**

## Steering wheel

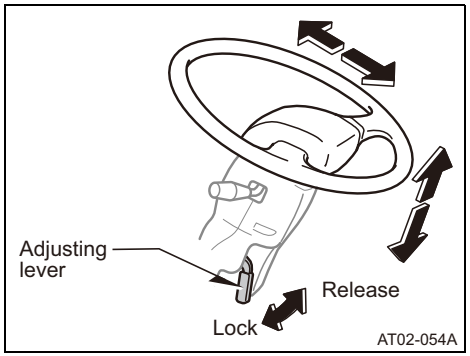

**⚠ WARNING**

- **Improper use of the steering wheel adjustment mechanism can result in death or serious injury in an accident.**
- **After adjusting the steering wheel, securely lock the adjusting lever by placing the lever in the "LOCK" position. This will prevent the steering wheel from changing position while the vehicle is moving. If the adjusting lever is not secure, excessive steering wheel play may occur which could result in loss of control of the vehicle.**
- **Never adjust the steering wheel position while the vehicle is in motion. If the steering vehicle needs to be adjusted while driving, stop in a safe place and make the proper adjustment.**
- **Always adjust the steering position only while the vehicle is parked. Otherwise, you may lose control of your vehicle resulting in death or serious injury in an accident.**
- **Never park your vehicle for a long time with the steering wheel fully turned to one side. This position could cause damage to the power steering system, resulting in death or serious injury in an accident.**

**The height and the tilt angle of the steering wheel is adjustable, depending upon your driving position.**

**To adjust:**

1. Release the adjusting lever and move the steering wheel up or down, and tilt forward or backward, as desired.
2. After adjustment, always lock the adjusting lever.

Your vehicle is equipped with a power steering system. If you have difficultly turning the steering wheel, it may be because of a malfunction of the power steering system.

## Outside rear view mirrors—

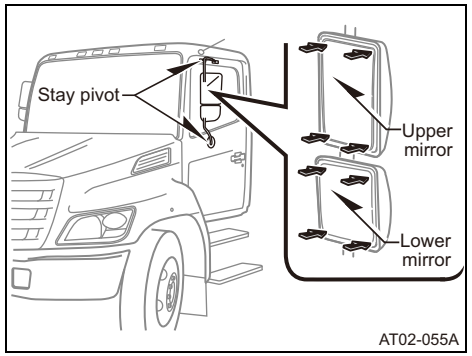


**The outside rear view mirrors on the driver side (see illustration above) and passenger side are they same. Each mirror consists of an upper positioned, flat mirror and a lower positioned convex mirror.**

**Adjust the upper positioned and lower positioned outside mirrors on each sides of the vehicle, as necessary, for optimum rear viewing when in your usual driving position.**

Both the driver side and passenger upper positioned mirrors may be adjusted either by the review view mirror control switch or manually. The lower positioned convex mirrors may only be adjusted manually.

**Keep the mirrors clean at all times.**

### MANUAL ADJUSTMENT OF THE MIRRORS

First, adjust the stay pivot of the driver side upper positioned outside mirror so that the side of the rear body can be seen in the mirror from the driver's seat. Then adjust the mirror by pushing the corners of the mirrors as shown in the above illustration.

Next adjust the passenger side upper positioned outside mirror. Finally, adjust the driver side and passenger side lower positioned mirrors.

## —Rear view mirror control switch (If so equipped)

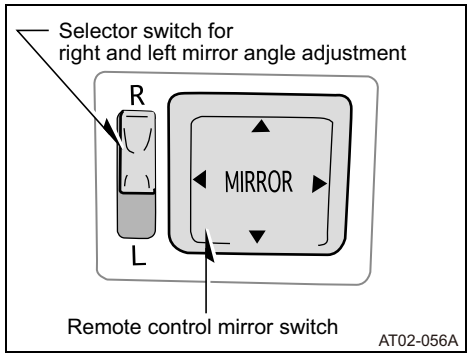


**The rear view mirror control switch enables the adjustment of the angles of the driver side and passenger side upper positioned rearview mirrors.**

1. You can use this switch when the key is at the "**ON**" position. Select the rear view mirror and adjustment angle by using the selector switch. "**L**" is for the left (driver's) side mirror and "**R**" for right (passenger's) side mirror.
2. Press "▲" on the rear view mirror control switch to adjust the rear view mirror angle. Pressing the switch in the direction of the arrow at the 6 o'clock position or the 12 o'clock position adjusts the vertical angle of the mirror in the arrow's direction. Pressing the switch in the direction of the arrow at the 3 o'clock position or 9 o'clock position adjusts the horizontal angle of the mirror in the arrow's direction.

When you are not using this switch, set the selector switch at the center position.

**⚠ WARNING**

**Be sure to adjust the angle of the rear view mirror before driving so that the rear view from both the driver side and passenger side mirrors are correct for the driver. Never adjust the mirrors while driving. Otherwise, you may lose control of your vehicle, resulting in death or serious injury in an accident.**

**The lower positioned mirrors on the driver and passenger sides are convex. This widens your field of view, but vehicles and objects seen in these mirrors will appear to be smaller and farther away than they really are.**

**Incorrectly estimating distances with the lower positioned mirrors, such as when you are judging distances of vehicles behind you when changing lanes, can cause accidents resulting in death or serious injury.**

**Always use the upper positioned mirrors to judge distances, as well as vehicles and object sizes, with greater accuracy.**

### —Mirror heater switch (If so equipped)

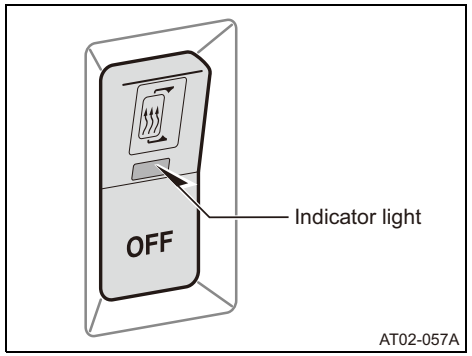


**This switch is used to get rid of frost and fogging of the mirrors.**

When the switch is pushed, the indicator light comes on and the rear view mirrors are started to be warmed.

**⚠ CAUTION**

- **Be sure to turn the switch to the “OFF” position after using it.**
- **To avoid battery run-down, do not use the mirror heater switch while the engine is stopped.**

H1-A038E01.book　54 ページ　２０１６年１０月１９日　水曜日　午後５時２６分

H1-A038E01.book 55 ページ ２０１６年１０月１９日 水曜日 午後５時２６分

# SECTION 2 – 4

## OPERATION OF INSTRUMENTS AND CONTROLS

### Lights and Wipers

Headlights and turn signals ..... 2-56
Rheostat light control switch ..... 2-58
Hazard lights switch ..... 2-58
Windshield wipers and washer ..... 2-59
Cab light switch ..... 2-59
Van light switch ..... 2-60

Read the entire manual before using the vehicle. Failure to follow instructions, warnings and safety precautions could result in death, serious injury and/or damage to the vehicle.

## Headlights and turn signals—

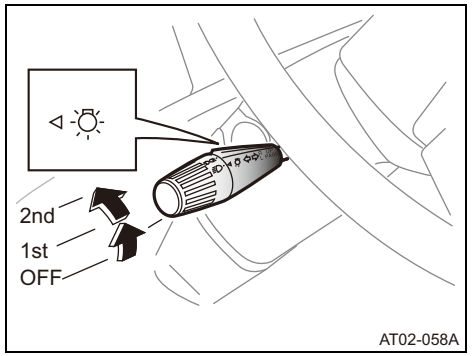


| Light | Switch position | | |
|---|---|---|---|
| | OFF | 1st | 2nd |
| Instrument cluster | X | O | O |
| Clearance | | | |
| Tail lights | | | |
| License plate | | | |
| Headlights | X | X | O |
| Daytime running lights (If so equipped) | O | O | X |

- When you turned the lever from “**OFF**” towards the “**1st**” position, the clearance lights, identification lights, side marker lights, tail lights, license plate lights and instrument lights are turned on.
- When you turn the lever from “**OFF**” or the “**1st**” position toward the “**2nd**” position, the headlights are turned on in addition to the lights turned on described above.
- The daytime running lights (If so equipped) are turned on when the parking brake is released and the lever is on the “**OFF**” or the “**1st**” position. When you turn the lever to the “**2nd**” position, the daytime running lights (If so equipped) are turned off in addition to the above lights.

**⚠ WARNING**

**Daytime running lights (If so equipped) are not bright enough to allow you to see ahead or be seen by others when it is dark.**

**⚠ CAUTION**

**Never leave the lights on for a long period when the engine is not running. Otherwise, the battery will run down and the engine will not start again.**

### —Beam control switch

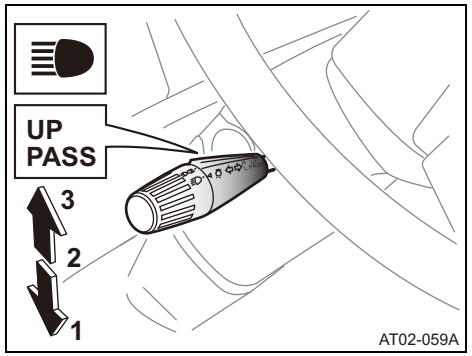


The head light beam control switch is operated in the following manner:

**High beam - Push down (Position 1)**

If the lever is placed in "**1**" position, the high beam head lights come on and the high beam indicator light on the instrument cluster comes on while the high beam is on.

**Low beam (Position 2)**

If the lever is lifted from "**1**" position to "**2**" position, the high beam head lights are turned off and the head lights are switched from high beam to low beam.

**Passing - Pull up (Position 3)**

The high beam head lights come on when you move the lever up to "**3**" position. When you release the lever, the lever automatically returns to "**2**" position and the high beam head lights are turned off. You can turn on the high beam at this position even when the dial on the lever is in the "**OFF**" position.

### —Turn signal switch

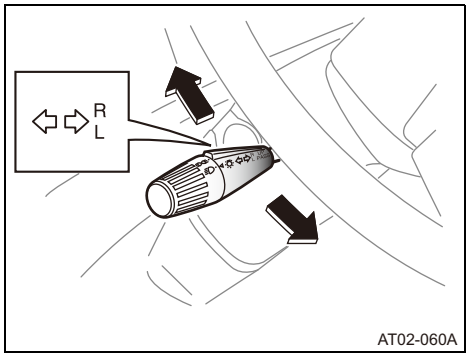


The turn signal is activated by moving the signal lever to the left for a left turn, or to the right for a right turn. The turn signal indicator light on the instrument cluster will blink in the designated direction of the turn when key is in the "**LOCK**" or "**ACC**" position. To cancel the signal, place the signal lever in the neutral position. The signal lever automatically returns to the neutral position when the steering wheel returns to the straight position after a turn.

## Rheostat light control switch

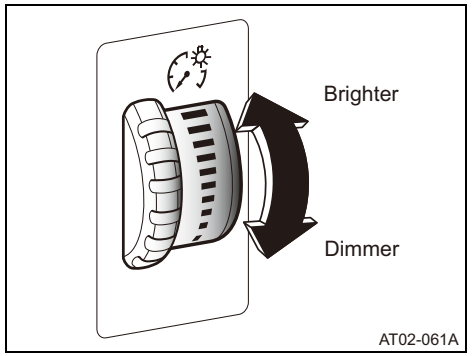


**The brightness of the instrument cluster lights can be adjusted by turning the control switch.**

Turning the rheostat light switch downward, the instrument cluster lights will fade gradually and at the end of the downward movement will turn off. Adjust the brightness so that it is appropriate for the safe driving.

## Hazard lights switch

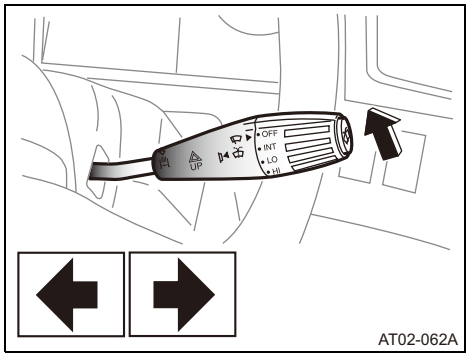


**⚠ WARNING**

**Stopping in traffic because of a break down creates a high risk of accident both for you and for other vehicles.**

- **Always stop the vehicle as soon as it is safe to do so and move the vehicle a safe distance off of the road.**
- **Turn on the vehicle's hazard lights to warn approaching traffic.**

The hazard lights are turned on by moving the head light and turn signal switch in an upward direction. The symbol "⚠" appears on the side of the head light and turn signal switch with an arrow pointing upward. When the hazard lights are switched on, all turn signal lights on the vehicle, front and rear, begin to blink. The hazard lights will be switched on by an upward movement regardless of the key position.

The hazard lights should be used in the following situations:

- Anytime there is an emergency.
- If the vehicle stops operating properly for technical or mechanical reasons.
- When traffic suddenly slows or stops in front of you and you want to warn vehicles behind you.
- When the vehicle is being towed.

Always obey all traffic laws governing the use of hazard lights.

## Windshield wipers and washer

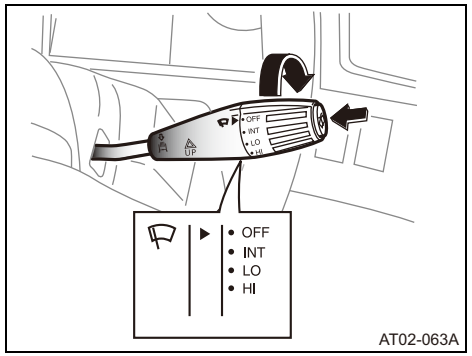


### WINDSHIELD WIPER SWITCH

The windshield wiper has four control positions, “**HI**”, “**LO**”, “**INT** (Intermittent)” and “**OFF**”.

Select the switch position appropriate to the weather conditions.

### WINDSHIELD WASHER SWITCH

To operate the washer, push the windshield washer switch. The washer solution is sprayed on the windshield while the washer switch is pushed (See page 6-22 for replenishing the washer tank).

**⚠ CAUTION**

**Do not operate the windshield washer switch continuously for more than 15 seconds. Doing so may damage the washer.**

## Cab light switch

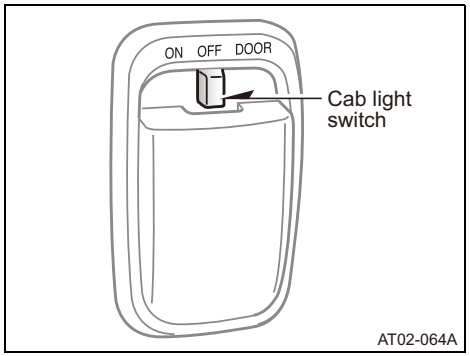


When the switch is in the “**DOOR**” position, the cab light will come on when all doors or any door is opened. It will go off when all doors are closed. To turn on the light when the doors are closed, turn the switch to “**ON**”. To keep the light off even when a door is open, turn the light switch to “**OFF**”.

**⚠ CAUTION**

- **Be sure to turn the cab light switch to “OFF” or “DOOR”, with all doors closed, after turning the switch to “ON”.**
- **Do not leave the cab light on while the engine is stopped. The battery may run down and the engine will not start again.**

## Van light switch (If so equipped)

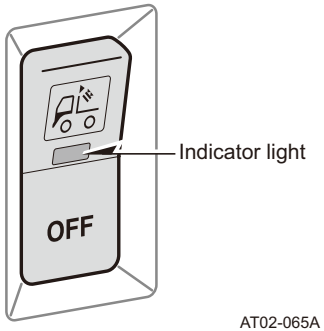


The van light switch is used for working in the van or at night. When the van light switch is pushed, the indicator light comes on and the van light turns on. Be sure to turn the van light off when your work is completed.

**⚠ CAUTION**

- **Be sure to turn the van light switch “OFF” after using it.**
- **Do not use the van light switch while the engine is stopped. The battery will run down and the engine will not start again.**

H1-A038E01.book 61 ページ ２０１６年１０月１９日 水曜日 午後５時２６分

# SECTION 2 – 5

## OPERATION OF INSTRUMENTS AND CONTROLS

### Gauges, Instruments, Displays and Service reminder indicator

Speedometer and odometer ..... 2-62
Tachometer ..... 2-62
Fuel gauge ..... 2-63
Engine coolant (water) temperature gauge ..... 2-64
Air pressure gauge (Full air brake type) ..... 2-65
Warning lights ..... 2-66
Indicator lights ..... 2-73

Read the entire manual before using the vehicle. Failure to follow instructions, warnings and safety precautions could result in death, serious injury and/or damage to the vehicle.

## Speedometer and odometer

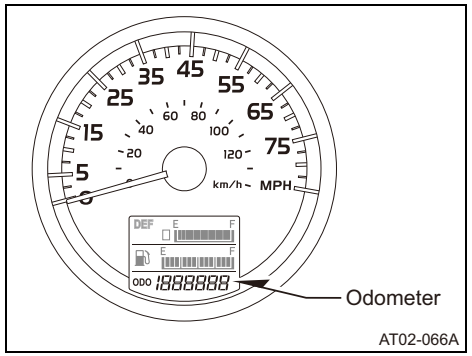


**U.S.A.**

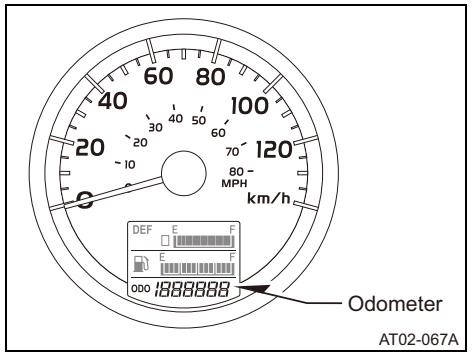


**Canada**

**SPEEDOMETER**

The speedometer indicates the vehicle's forward speed in miles per hour (MPH) and kilometers per hour (km/h).

**ODOMETER**

The odometer indicates the total distance that the vehicle has been driven.

## Tachometer

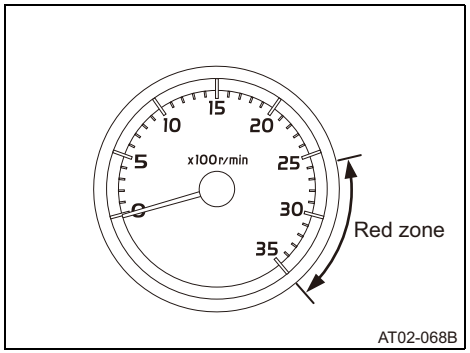


**The tachometer indicates engine speed in thousands of rpm (revolutions per minute). Use it while driving to select correct shift points and to prevent engine lugging and over-revving.**

Driving with the engine running too fast causes excessive engine wear and inefficient fuel consumption.

**The red zone {over 2,600 rpm (r/min.)} indicates overrunning of the engine.**

**⚠ WARNING**

**Never drive with the tachometer pointer in the red zone which means engine is running in excess of the maximum permissible range of engine revolutions for all gears. In such circumstances, the engine and power train can be damaged severely, which can cause an accident resulting in death or serious injury.**

"**OVERRUNNING**" means the engine is running in excess of the maximum permissible range of the engine revolutions. Operating the engine at this speed will impose excessive loads not only on the engine but also on the parts relevant to the engine, which can result in damage to the engine and power train.

## Fuel gauge

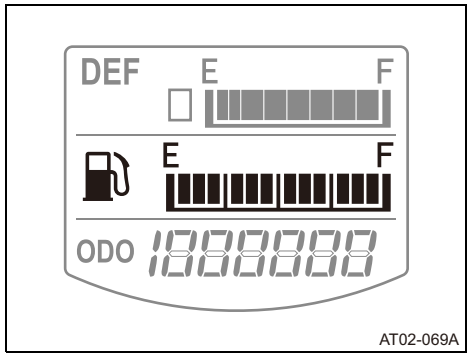

AT02-069A

The gauge indicates the **approximate** fuel level in the fuel tank. The gauge only registers when the key is in the "**ON**" position.

**Refill the fuel tank with fuel before the gauge indicates "E" (Empty).**

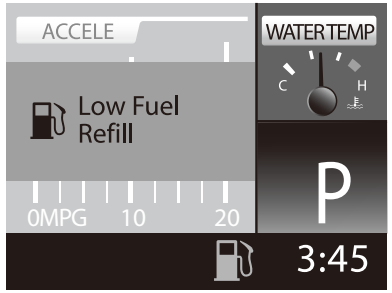

AT02-070A

Fuel line markers on the gauge disappear, one by one, as the fuel level in the tank reduces. When only one marker is left, the low fuel warning message appears on the information display. The one remaining marker then starts blinking. In this situation, refill the fuel tank with fuel as soon as possible.

In case of running out of gas, air bleed the fuel system after adding fuel.
See "Air bleeding" on page 6-62.

**⚠ CAUTION**

**Use ultra low sulfur diesel fuel (sulfur content: less than 15 ppm (0.0015%)). Otherwise, the engine and other components of the vehicle such as the exhaust gas purifier may be damaged.**

**For details, see “Fuel system” on page 6-60.**

- **When using biodiesel fuel, see “Table 8: Requirements of biodiesel fuel usage” on page 6-109, and please consult your Hino dealer.**

**⚠ CAUTION**

**Use of certain biodiesel fuel may damage the exhaust system. Be sure to contact your Hino dealer and follow the dealer's instructions regarding the use of biodiesel fuel before you use the biodiesel fuel with your vehicle.**

## Engine coolant (water) temperature gauge

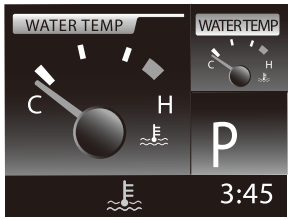


Immediately after engine start

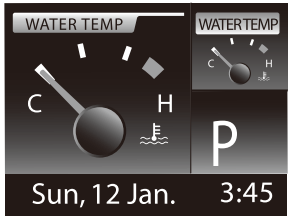


Temperature reaches around 122°F or 50°C

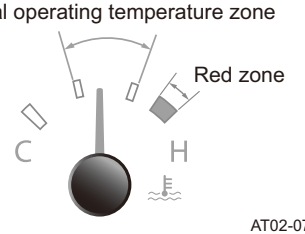


AT02-071A

**The engine coolant temperature gauge indicates the engine coolant temperature when the key in the “ON” position. The engine coolant temperature will vary with changes in weather and engine load.**

- When the engine coolant temperature is low (less than 122°F or 50°C) immediately after starting the engine, the indicator (blue) turns on. The pointer of the gauge will not move until the engine coolant temperature reaches approximately 122°F or 50°C. After the engine coolant temperature reaches approximately 122°F or 50°C, the pointer moves and the indicator (blue) turns off.
  The normal operating temperature zone is indicated in the above illustration. The pointer in the red zone indicates engine overheating.

- The pointer of the gauge is digitally displayed frame by frame and does not move smoothly.

**⚠ WARNING**

**If the pointer reaches the red zone while you are driving, pull off the road and stop the vehicle at the nearest safe place and follow instructions in "Engine Overheating" on page 4-13. Otherwise the engine can be damaged severely, which can cause an accident resulting in death or serious injury.**

### Air pressure gauge (Full air brake type)

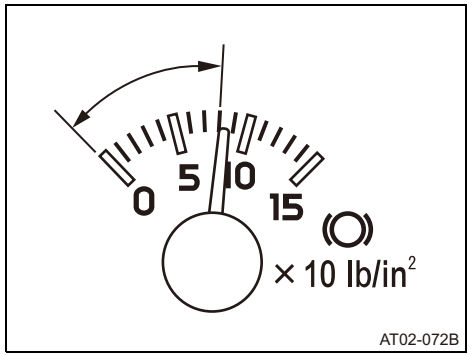


**U.S.A.**

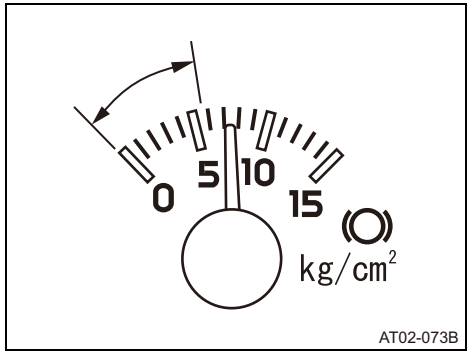


**Canada**

**The air pressure gauge indicates the air pressure in the reserve tank of the service brake system. When the air pressure drops below 79lb/in² (5.5kg/cm²), the warning light on the instrument cluster lights and a beep sounds. (The beep does not sound when the parking brake has been applied.)**

If the warning light and beep come on while driving, pull off the road and stop the vehicle in a safe place as soon as possible. Have your Hino dealer check and correct the malfunction. Continued driving without correction is extremely hazardous.

**⚠ WARNING**

**Never drive the vehicle where the air pressure gauge indicates there is low air pressure in the brake system. If the brake system may not be working properly, stop the vehicle in a safe place as soon as possible.**

A-02-5.fm 66 ページ ２０１６年１０月２６日 水曜日 午前９時２４分

## Warning lights

| Warning light | | Possible cause or meaning of indicator light | What to do if the warning light comes on |
|---|---|---|---|
| 1 |  | Parking brake malfunction, see page 2-69. | If parking brake is off, stop and check. |
| 2 |  | Hydraulic brake pressure malfunction, see page 2-69. | Stop the vehicle, check and contact your Hino dealer. |
| 3 |  | Air brake pressure malfunction, see page 2-69. | Stop the vehicle and contact your Hino dealer. |
| 4 |  | Emission control malfunction, see page 2-70, 2-101, 3-29, 3-30, 3-31, 3-33, 3-34 and 3-38. | Stop the vehicle and detect the malfunction by “Self diagnosis system” (see page 2-101) and contact your Hino dealer. |
| 5 |  | Automatic transmission malfunction, see page 2-70 and 2-106. | Check the transmission system immediately. |
| 6 |  | Automatic transmission temperature malfunction, see page 2-70 and 2-107. | Stop the vehicle, check the fluid level in the transmission and the cooling system. |

| Warning light | | Possible cause or meaning of indicator light | What to do if the warning light comes on |
|---|---|---|---|
| 7 |  | Anti-lock Brake System (ABS) malfunction, see page 2-70. | Stop the vehicle and contact your Hino dealer. |
| 8 |  | Battery charging circuit malfunction, see page 2-71. | Stop the vehicle and check. |
| 9 |  | Engine coolant level low, see page 2-71 and 2-105. | Stop the vehicle and check. |
| 10 |  | Engine oil pressure low, see page 2-71 and 2-106. | Stop the vehicle and contact your Hino dealer. |
| 11 |  | Engine overheated (Red), see page 2-71 and 4-13. | Stop the vehicle and check. |
| 12 |  DEF | DEF needs changing, see page 2-71, 2-107 and 3-30. | Change the DEF (only API - supplied logo used).<br>The key position should be “ON” while you change the DEF. |
| 13 |  | After treatment system (DEF-SCR system and DPR) malfunction, see page 2-72, 2-111 and 3-38. | Stop the vehicle and check. Then contact your Hino dealer. |
| 14 |  | DEF level low, see page 2-72 and 2-108. | Refill the DEF (only API - supplied logo used) as soon as it is convenient. |

| Warning light | | Possible cause or meaning of indicator light | What to do if the warning light comes on |
|---|---|---|---|
| 15 |  | Fuel low, see page 2-72 and 2-110. | Refuel as soon as it is convenient. |
| 16 |  | Engine shutdown, see page 2-72 and 2-104.<br>(If so equipped) | See “ENGINE SHUTDOWN”. |
| 17 |  | Drain fuel filter, see page 2-72 and 2-110. | Drain water from fuel filter. |

**1. Parking Brake Warning Light**

With the parking brake applied and the key in the "**ON**" position, the parking brake warning light will come on.

**⚠ CAUTION**

**Be sure to release the parking brake and confirm that the parking brake warning light is off before you drive the vehicle. Driving with the parking brake engaged can overheat the brake system and cause premature wear or damage to the brake system.**

**2. Brake Pressure Warning Light (Hydraulic brake type)**

The brake pressure warning light comes on when the key is turned to the "**ON**" position. If the brake pressure warning light remains on after you start the engine, a brake system malfunction is indicated and your brakes may not be working properly. Never drive the vehicle with this light on. Contact your Hino dealer.

**⚠ WARNING**

**If the brake pressure warning light comes on and the beep sounds while driving, pull off the road and carefully stop your vehicle at the nearest safe place. There may be a brake malfunction which may increase the stopping distance of your vehicle. Have your Hino dealer check and correct the malfunction before driving again.**

**3. Air Brake Pressure Warning Light (Full air brake type)**

The air brake pressure warning light comes on when the key is turned to the "**ON**" position. If the air pressure system works properly, the light turns off after few seconds. The warning light comes on and a beep sounds when the air pressure of the air brakes gets too low.

**⚠ WARNING**

**If the air brake pressure warning light comes on and/or the beep sounds while driving, pull off the road and stop your vehicle at the nearest safe place. There may be an air brake pressure malfunction which may increase the stopping distance of your vehicle.**

**Have your Hino dealer check and correct the malfunction before driving again.**

After starting the engine, do not drive your vehicle until the air brake pressure warning light turns off and the beep has stopped sounding. The beep does not sound when the parking brake is applied.

A-02-5.fm 70 ページ ２０１６年１０月２５日 火曜日 午後４時３１分

**4. MIL (Malfunction Indicator Light)**

The malfunction indicator light comes on if the problem involving emission controls occurs.

(1) The light comes on when the key is turned to "**ON**" or "**START**" position. If it doesn't turn on, either the light has burned out or there is a problem with the fuel system.

(2) The light goes off after starting the engine. If this light keeps illuminated after starting the engine or turns on while driving the vehicle, it is a signal that something abnormal has been detected.

**⚠ WARNING**

**When this warning light comes on, check out when the malfunction occurred by "Self diagnosis system". If the trouble code listed in the "ACTIVE" display, have your vehicle checked and repaired at your Hino dealer immediately. See "Self diagnosis system" on page 2-101.**

**5. Check Automatic Transmission warning light**

Check the transmission system. See "CHECK TRANS" on page 2-106.

**6. Automatic Transmission Temperature Warning Light**

See "TRANS OIL TEMP" on page 2-107.

**7. Anti-lock Brake System (ABS) Warning Light**

This light confirms that the Anti-lock Brake System (ABS) is properly functioning. The light should come on briefly when the key is turned to the "**ON**" position. If the light comes on while driving or does not come on when starting the engine, you may have a problem with your ABS. Have your vehicle serviced immediately by your Hino dealer.

**⚠ WARNING**

- **If the ABS light comes on while driving, there could be a problem with the ABS. You should be careful and drive the vehicle in the same way that you would drive a vehicle without ABS. Have your vehicle inspected and serviced immediately at your Hino dealer.**
- **For vehicles with an Allison transmission, when the ABS light is on, the Allison transmission will not allow torque convertor lockup. If this condition is ignored the transmission fluid may overheat, causing fluid to be pumped out of the transmission breather and/or dipstick tube, which can result in premature wear of or damage to the transmission.**

**8. Battery Charging Circuit Warning Light**

The battery charging circuit warning light indicates the state of battery charging. When the key is turned to the "**ON**" position, the warning light comes on. It should go off when the engine is at idle speed or above. If the light remains lit, or if it turns on while driving, stop the vehicle and have your vehicle checked and repaired at your Hino dealer.

**9. Engine Coolant Level Warning Light**

See "LOW COOLANT" on page 2-105.

**10. Engine Oil Pressure Warning Light**

The oil pressure warning light indicates that the engine oil pressure is not high enough for safe operation of the vehicle.

See "LOW OIL PRESSURE" on page 2-106.

**⚠ CAUTION**

**If the engine oil pressure warning light comes on and/or the beep sounds while driving, pull off the road and stop the engine at the nearest safe place immediately.**

**Have your Hino dealer check the engine oil pressure and correct the situation. Otherwise, continued driving can result in serious damage to the engine.**

**11. Engine Coolant (Water) Temperature Warning Light**

If the indicator is illuminated "**RED**", engine overheating occurred. See "Engine Overheating" on page 4-13.

**12. DEF Quality Light**

This warning message will appear when improper DEF quality is detected. If this warning light is illuminated, drain the fluid completely.

The DEF pump, DEF injection and DEF line must then be removed and new components installed. After the new components have been installed, the DEF should be replenished with certified DEF.

Be certain to place the key in the "**ON**" position while you change the DEF. Replenish the DEF tank with at least 1.5 gal. (5.7L) of proper DEF (only API certified DEF). Always follow this procedure when replenishing the DEF. If you do not follow this procedure, this warning light will not turn off. (See "CHANGE DEF NOW" on page 2-107.)

***NOTICE:***

*The DEF in the DEF tank freezes at 12°F (-11°C). If the DEF in the DEF tank is frozen, do not warm the DEF tank by using the burner and heater. The vehicle is equipped with a defrost device, and frozen DEF will be defrosted while the vehicle is being driven. Make sure that the DEF in the DEF tank is defrosted before starting the procedures for changing the DEF.*

**13.After Treatment Malfunction Light**

DEF-SCR system malfunction —
Stop the vehicle and check out when this warning light comes on, detect the nature of the malfunction by using the “Self diagnosis system” (see page 2-101) and contact your Hino dealer.

DPR malfunction—
When this warning light comes on, it is necessary to have your vehicle checked and repaired as soon as possible by your Hino dealer. (See “DPR manual regeneration requirement” on page 3-38.)

**14.DEF Light**

You must replenish DEF immediately. Replenish with at least 1.5 gal. (5.7L) or more of proper DEF (only API certified DEF). (See “DEF LOW” on page 2-108.)

***NOTICE:***

*The DEF in the DEF tank freezes at 12°F (-11°C). If the DEF in the DEF tank is frozen, do not warm the DEF tank by using the burner and heater. The vehicle is equipped with a defrost device, and frozen DEF will be defrosted while the vehicle is being driven. Make sure that the DEF in the DEF tank is defrosted before starting the procedures for replenishing the DEF.*

**⚠ WARNING**

**Never ignore any illuminated warning light with respect to DEF. If such a warning light is illuminated, the vehicle’s torque or speed will be restricted and you must take the appropriate actions immediately.**

**For more information, see pages 3-29, 30 and 33.**

**15.Low Fuel Warning Light**

See “LOW FUEL REFILL” on page 2-110.

**16.Engine Shutdown**

See “ENGINE SHUTDOWN” on page 2-104.

**17.Drain Fuel Filter Warning Light**

See “WATER IN FUEL” on page 2-110.

## Indicator lights

| Indicator light | | Possible cause or meaning of indicator light | Indication |
|---|---|---|---|
| 1 |  | Exhaust brake, see pages 2-75 and 3-35. | The “Exhaust brake” or “DPR regeneration” has been activated. |
| 2 |  | Headlight high beam, see pages 2-57 and 2-75. | The headlight beam is turned on. |
| 3 |  | Turn signal, see pages 2-57 and 2-75. | The turn signal or hazard lights are operating. |
| 4 |  | DPR or SCR maintenance, see page 2-75. | Maintenance is required for the DPR or SCR. |
| 5 |  | DPR manual regeneration, see pages 2-75 and 3-35. | The DPR manual regeneration has been enabled. |
| 6 | SVS | Engine malfunction, see page 2-75. | Check the diagnosis code. |
| 7 |  | Glow plugs, see page 2-75. | The glow plugs are operating. |
| 8 |  | Height control, see page 3-6. (If so equipped) | The air suspensions are operating. |

| Indicator light | | Possible Cause or Meaning of Indicator Light | Indication |
|---|---|---|---|
| 9 |  | PTO, see page 2-75. (If so equipped) | The PTO is functioning. |
| 10 |  | Differential lock, see pages 2-75 and 3-40. (If so equipped) | The differential lock has been activated. |
| 11 | CRUISE | Cruise control, see page 3-41. (Ready to active) | The cruise control main switch is “ON”. |
| 12 |  | Cruise control, see page 3-41. (Operating) | The cruise control is operating. |
| 13 |  | Engine coolant (Blue) - low temperature, see page 2-64. | The engine coolant temperature is low. |
| 14 |  | Maintenance, see pages 2-100 and 2-112. | Maintenance should be done based on the time or distance traveled. |
| 15 |  | Low power, see pages 2-76, 3-20 to 3-34 and 3-35 to 3-39. | The engine performance (output) is limited. |

**1. Exhaust Brake Indicator Light**

The exhaust brake indicator light is illuminated when the exhaust brake has been activated.

**2. Headlight High Beam Indicator Light**

The headlight high beam indicator light is illuminated when the headlight high beam is turned on or the passing switch lever is pulled up. (See page 2-57.)

**3. Turn Signal Indicator Lights**

The turn signal indicator lights flash on and off when the turn signal or hazard lights are operating. (See page 2-57.)

**4. Exhaust Gas After Treatment System Maintenance Required Indicator Lights**

This indicator light informs you that periodic maintenance is required for the SCR. Have your vehicle checked and repaired at your Hino dealer. (For more information, see “Table 1: Recommended maintenance service” on page 6-43.)

**5. DPR Indicator Light**

DPR indicator light flashes on and off when DPR manual regeneration is required. If the DPR indicator light starts to flash, follow instructions on page 3-35.

**6. SVS Light**

The SVS (Service Vehicle Soon) light illuminates when the self diagnosis system detects a problem and warning or cautionary information is displayed.
(See “Self diagnosis system” on page 2-101.)

This light shows whether the operating condition of the electronically controlled engine system is normal or not. If it does not light, it is due to the burning of the bulb or to the abnormality of the electronically controlled engine system. If this light illuminate after starting the engine or while driving the vehicle, it is a sign that something abnormal has occurred.

**7. Pre-heater Indicator Light**

The pre-heater indicator light comes on when the glow plugs are heating. The light will go off, when the glow plugs reach the appropriate heating level. (See “Cold weather conditions” on page 3-8.)

**8. Height Control Indicator Light (If so equipped)**

See “Air suspension dump switch” on page 3-6.

**9. PTO Indicator Light (If so equipped)**

For PTO operation and indicator light, refer to the body builder’s instruction manual.

**10. Differential Lock Indicator Light (If so equipped)**

This light will appear when pressing the “**ON**” side of the differential lock switch to lock the differential lock. See “Differential lock (If so equipped)” on page 3-40.

H1-A038E01.book 76 ページ ２０１６年１０月１９日 水曜日 午後５時２６分

**11.Cruise Control Indicator Light (Ready to activate)**

See “Cruise control” on page 3-41.

**12.Cruise Control Indicator Light (Operating)**

See “Cruise control” on page 3-41.

**13.Engine Coolant Low Temperature Indicator Light**

See “Engine coolant (water) temperature gauge” on page 2-64.

**14.Maintenance Indicator Light**

See “Maintenance” on page 2-100 and “Maintenance information message” on page 2-112.

**15.Low Power Indicator Light**

The low power indicator light is comes on when the engine performance (output) is limited.

See “DEF - SCR system” on pages 3-20 to 3-34 and “Diesel Particulate active Reduction system (DPR)” on pages 3-35 to 3-39.

A-02-6.fm 77 ページ ２０１６年１０月２５日 火曜日 午後４時３７分

# SECTION 2 – 6

## OPERATION OF INSTRUMENTS AND CONTROLS

### Starter switch, Transmission, Pedals and Parking brake

Starter switch ..... 2-78
Manual transmission ..... 2-79
Automatic transmission ..... 2-80
Information display ..... 2-87
Pedals ..... 2-113
Exhaust brake switch ..... 2-114
Parking brake lever (Toggle type) ..... 2-115
Parking brake control knob ..... 2-116

Read the entire manual before using the vehicle. Failure to follow instructions, warnings and safety precautions could result in death, serious injury and/or damage to the vehicle.

A-02-6.fm 78 ページ ２０１６年１０月２５日 火曜日 午後４時３７分

## Starter switch

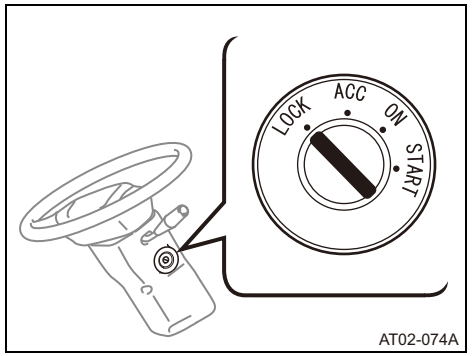


Insert the key fully in the starter switch. You may turn the key to the "**ACC**", "**ON**" or "**START**" positions.

"**LOCK**"**—** In the "**LOCK**" position, the steering wheel will be locked. The key cannot be inserted or removed from the starter switch at any position other than the "**LOCK**" position. Press the key inward when you turn the key to "**LOCK**" position from any other position. Then remove the key from the starter switch.

**⚠ WARNING**

**Never move the vehicle after removing the key from the starter switch or while the key is in the "LOCK" position. When the key is removed, the steering wheel is locked and the vehicle cannot be steered or controlled while moving, which could result in death or serious injury in an accident.**

***NOTICE:***

- *If the key will not turn to or from the "**LOCK**" position, turn the steering wheel slightly clockwise or counterclockwise, and then the key can be turned easily.*
- *After the engine is stopped, always set the key to the "**LOCK**" position. If the key is left in the "**ON**" or "**ACC**" position, the battery will run down and the engine will not start.*

**"ACC" (ACCESSORY)—**Turning the key to the "**ACC**" position connects some accessory equipment circuits (such as the cigarette lighter and radio). It does not connect the starter, preheating warning device and charging circuits.

**"ON"—**Turning the key to the "**ON**" position connects all electrical circuits except the starter circuits.

A-02-6.fm 79 ページ ２０１６年１０月２５日 火曜日 午後４時３７分

**“START”—**

1. Turning the key to “**START**” position engages the starter motor in order to start the engine.
2. The key automatically returns to the “**ON**” position when you release it.

| ⚠ CAUTION |
| --- |
| **Do not turn the key to “START” position after the engine has started. This could cause damage to the starter motor and/ or engine.** |

## Manual transmission

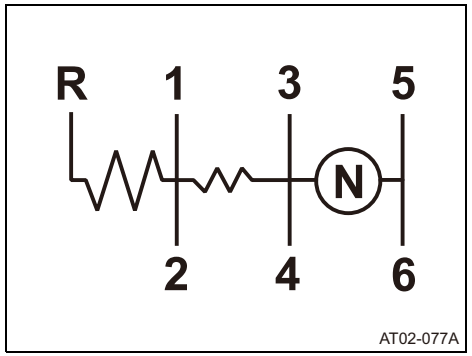


### Eaton® FS5406A and FS6406A

The transmission has six-forward speeds and one reverse. Use 1st gear to start when the vehicle is stopped. The shift pattern is shown on the shift knob. When shifting between “5th and 6th” gears, the shift lever should be held to the right to prevent mis-shifting. Mis-shifting can cause engine overrunning.

Before shifting the lever, always remember to fully depress the clutch pedal.

Apply synchromesh gears:

| Transmission | Synchromesh |
| --- | --- |
| 6 speeds<br>FS5406A<br>FS6406A | 1st to 6th |

Before driving your vehicle, learn the shift pattern and shifting procedure for your vehicle thoroughly. When the gearshift lever is placed in “**R**” (reverse) position, the backup lights come on automatically.

## Automatic transmission—

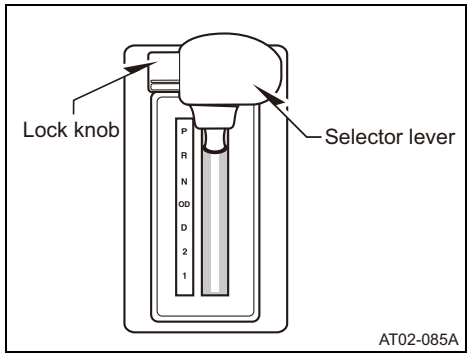


**Allison® 2200HS, 2200RDS, 2500HS and 2500RDS**

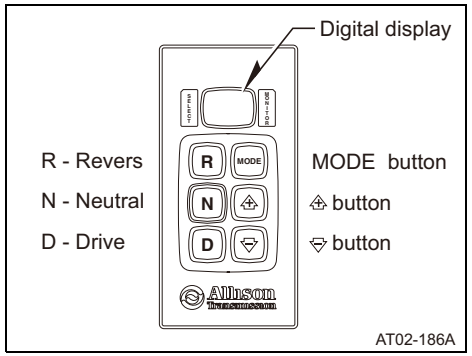


**Allison® 3000RDS and 3500RDS**

***NOTICE:***

***Digital display—***

*Visually check to confirm the range selected. If the display is blinking, it may be more difficult for the automatic transmission to shift from one range to another.*

***Delay in shifting—***

*When shifting the selector lever or pressing the selector button at high engine rpm, shifting may be delayed. For the Allison® 2200HS, 2200RDS, 2500HS and 2500RDS transmissions, shifting delay may occur over 1100 rpm. For the Allison® 3000RDS and 3500RDS transmission Shifting delay may occur over 900 rpm.*

*The automatic transmission is equipped with a starter safety switch which allows engine starting only when the selector button is in the "**N**" (Neutral) or "**P**" (Parking) position.*

**Allison® 2200HS and 2200RDS Transmission with Park Pawl Mechanism**

A park pawl, which is standard on the Allison® 2200HS and 2200RDS transmissions, effectively grounds the output shaft, thereby preventing rotation of the drive line. If the vehicle is stationary, selecting the "**P**" (Park) position on the shift selector places the transmission in neutral position and engages the park pawl (Always use the parking brake when the transmission is shifted to "**N**" or "**P**".).

**If you attempt to engage "P" position while the vehicle is moving (1 mph, 2 km/h) or higher, the park pawl mechanism will ratchet, and will not hold the truck.**

**⚠ WARNING**

- **Never start the vehicle with engine idle speed higher than standard (750 rpm (r/min)). Starting at an idle speed of 750 rpm (r/min) or more may cause sudden acceleration of the vehicle resulting in death or serious injury in an accident.**
- **Start at an idle speed of 750 rpm (r/min) or more may also cause increase fuel consumption.**
- **When starting the vehicle, always depress the brake pedal and then move the selector lever or press the selector button from "N" or "P" to "D" or "R".**

***NOTICE:***

***EXPLANATION OF "CREEP PHENOMENON".***

*Creep Phenomenon occurs when the vehicle starts to move slowly without the driver depressing the accelerator pedal when the selector lever or press the selector button is in the "**D**" position and the engine idle speed is high.*

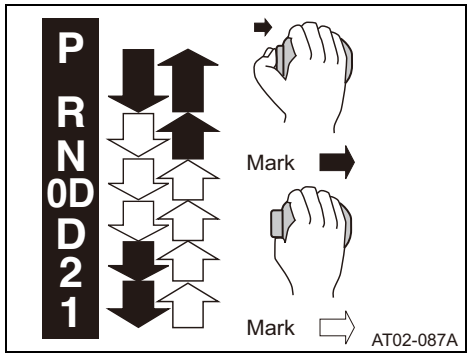


**Allison® 2200HS and 2200RDS**

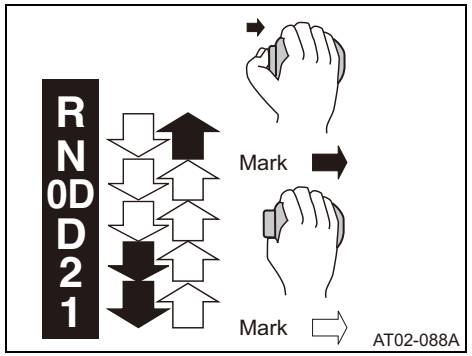


**Allison® 2500HS and 2500RDS**

**OPERATION OF THE SELECTOR LEVER**

When changing gears, be sure to use the lock knob as illustrated above.

Mark ➡ : Shifting with the button pressed

Mark ⇨ : Shifting without pressing the button

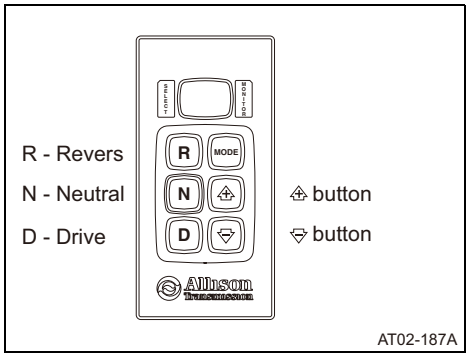


**Allison® 3000RDS and 3500RDS**

**OPERATION OF THE SELECTOR BUTTON**

**R**—Press the “**R**” button to select reverse.

**N**—Press the “**N**” button to select neutral.

**D**—Press the “**D**” button to select drive.

⇧ / ⇩ **button**—Press the “ ⇧ ” or “ ⇩ ” button when in drive to change the available highest range.

**“P” Park**

When parking a vehicle equipped with “**P**” (Parking) position, select “**P**” (Parking) position and apply the parking brake firmly.

**⚠ WARNING**

**To avoid sudden or unexpected movement of the vehicle, resulting in death or serious injury in an accident, when you park the vehicle:**

**1. Always fully depress the service brake, and stop the vehicle completely.**

**2. Place the gear in “P” for Allison® 2200HS and 2200RDS transmissions and “N” for Allison® 2500HS, 2500RDS, 3000RDS and 3500RDS transmissions.**

**3. Apply the parking brake firmly. In case of Allison® 2200HS and 2200RDS transmissions, before applying the parking brake, slowly release your foot from the brake pedal to engage transmission park pawl mechanism.**

**4. Turn off the engine when you leave the vehicle. Never leave the vehicle unattended with the engine running.**

**“R” Reverse**

The “**R**” position is used for driving backward.

Wait until the vehicle has completely stopped before shifting to the “**R**” position.

The backing up buzzer will sound when put the selector lever is moved to the “**R**” position.

**“N” Neutral**

Place the selector lever or press the selector button in the “**N**” position, when starting or warming up the engine.

The selector lever or selector button should also be in “**N**” position, when operating the PTO (power take-off), with the vehicle parked.

***NOTICE:***

*The engine should not start in any position other than “**N**” or “**P**”. If the engine can be started while the selector lever or selector button is in a position other than “**N**” or “**P**”, you may have problems with the transmission. In such a situation, have your Hino dealer check and correct it.*

**“D” Drive**

This is the selector lever or selector button position for normal driving. The transmission is set in the first gear at starting and automatically shifts up or down as you depress the accelerator pedal, depending on the load and desired speed.

**“3” Third, “4” Fourth and “5” Fifth Positions**

The “**3**”, “**4**” and “**5**” position is used for driving at medium speed. The transmission starts in first gear and automatically shifts to second and third (and fourth) gears, depending on the driving conditions.

**“2” Second Position**

The “**2**” position is used for driving at low speed. The transmission starts in the first gear and automatically shifts into second, as conditions require. It is also used when using the engine for braking while you go down hills.

**“1” First Position**

The “**1**” position corresponds to the low gear of a manually-shifted transmission. It is used for climbing especially steep hills and negotiating off-road terrain.

***NOTICE:***

- *The automatic transmission is provided with a LOCK-UP function. LOCK-UP operates when a particular speed has been reached, which will vary depending upon the circumstances. When the particular speed is reached, slipping of the torque converter is prevented and running performance is enhanced.*
- *If you use the exhaust brake while driving in sixth* gear*, it will downshift into fifth* gear *earlier than usual.*
  *The information display will change to “**5**” from “**OD**” (Allison® 2200HS 2200RDS, 2500HS and 2500RDS transmission) or “**5**” from “**D**” (Allison® 3000RDS and 3500RDS transmission).*
  *The digital display will change to “**5**” from “**6**” (Allison® 3000RDS and 3500RDS transmission).*

**—Driving mode selection switch**

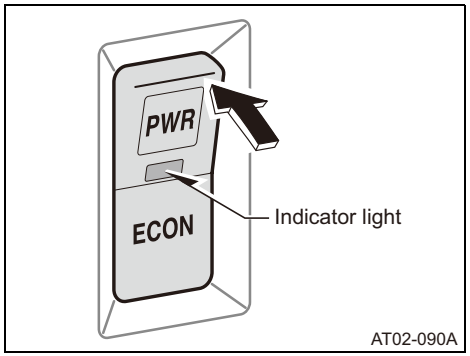


**Allison® 2200HS, 2200RDS, 2500HS and 2500RDS**

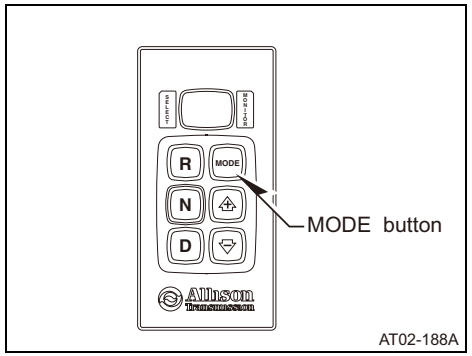


**Allison® 3000RDS and 3500RDS**

**Allison® 2200HS, 2200RDS, 2500HS and 2500RDS—**Push the "**PWR**" mode button to shift from economy mode to the power mode. The indicator light is on when the power mode is on. Push the "**ECON**" mode button to return to economy mode. The indicator light is off when the power mode is off and the economy mode is on.

**Allison® 3000RDS and 3500RDS—**Push the "**MODE**" button to shift from economy mode to the power mode. "POWER" DISPLAY when the power mode is on. Push again to return to economy mode.

- **Power mode:**

Use this mode when driving uphill, when you have a heavy load, or when you need to accelerate.

- **Economy mode:**

Use this mode when driving without a load or driving on a level road with a light load.

**—FuelSense® (If so equipped)**

- **FuelSense®:**
  **Dynamic Shift Sensing**
- **FuelSense® Plus™:**
  **Dynamic Shift Sensing**
  **Neutral at Stop**
- **FuelSense® Max™:**
  **Dynamic Shift Sensing**
  **Neutral at Stop**
  **Acceleration Rate Management**

FuelSense® is registered trademark of Allison Transmission Inc.

A-02-6.fm 86 ページ ２０１６年１０月２５日 火曜日 午後４時５３分

**Dynamic shift sensing**

The economy mode and the power mode are automatically switched according to the acceleration of the vehicle. The mode choice is unnecessary.
When pushing the "**PWR**" mode button, the power mode will be held for 30 seconds. To return to the power mode;

**Allison® 2200HS, 2200RDS, 2500HS and 2500RDS—**Push the "**ECON**" mode button and then push the "**PWR**" mode button again**.**

**Allison® 3000RDS and 3500RDS—**Push the "**MODE**" button (power mode).

**Neutral at Stop**

The gear shifts to "**N**" position automatically when stopping the vehicle by braking. And it shifts to "**D**" position, automatically when releasing the brake.

**Acceleration Rate Management**

It mitigates aggressive driving practices by automatically controlling engine torque. The level of control is determined by the vehicle's weight and the grade on which it is operating.

### —Starting the vehicle under normal driving conditions

1. First, depress the brake pedal to prevent the vehicle from moving due to vehicle creep.
2. Shift the selector lever or press the selector button to "**OD**", "**D**", "**5**", "**4**", "**3**", "**2**", "**1**" or "**R**" positions.

**⚠ WARNING**

**When starting the vehicle, always be sure to depress the brake pedal before depressing the accelerator pedal. Otherwise, the vehicle may move suddenly, which can cause an accident resulting in death or serious injury.**

3. Release the parking brake and then the brake pedal.
4. Depress the accelerator pedal slowly. The gear changes automatically depending on the vehicle speed and load.

***NOTICE:***

***OPERATING THE SELECTOR LEVER OR SELECTOR BUTTON—***

- *When shifting or pressing to or from "**R**" position, perform the shifting or pressing after the vehicle has fully stopped. Also visually check the selector lever position.*
- *Do not run the engine at high engine rotation speed while depressing the brake pedal. Check the "CHECK TRANS", see page 2-106.*

### Driving Uphill or Downhill

When driving uphill, move the selector lever from "**D**" to "**1**" or press the " ⇧ "/ " ⇩ " button to change the available highest range depending on the incline and loading of the vehicle.

When driving downhill, move the selector lever from "**D**" to "**1**" or press the " ⇧ "/ " ⇩ " button to change the available highest range according to the need to slow down using engine braking.

**⚠ WARNING**

**Never use the service brake excessively when driving downhill. Otherwise, the brake may become overheated and you may lose braking force, which can cause an accident resulting in death or serious injury.**

### Stopping the vehicle

Keep the selector lever or selector button at "**D**" position and firmly depress the brake pedal with your right foot. If you stop your vehicle on a slope, apply the parking brake. When you are stopping for a long time, depress the brake pedal, move the selector lever or press the selector button to "**N**" (Allison® 2500HS, 2500RDS, 3000RDS and 3500RDS transmission) or "**P**" (Allison® 2200HS and 2200RDS transmission), and apply the parking brake.

### Parking the vehicle

1. Shift the selector lever or press the selector button to "**N**" (Allison® 2500HS, 2500RDS, 3000RDS and 3500RDS transmission) or "**P**" (Allison® 2200HS and 2200RDS transmission) position while depressing the brake pedal.
2. Apply the parking brake firmly.
3. Release the brake pedal and stop the engine. When parking the vehicle on a slope, always block the all wheels by wheel stoppers.

### Information display—

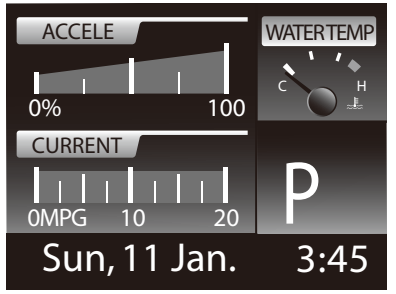


AT02-092A

The information display informs the driver of the various different conditions of the vehicle, including fuel consumption, trip mileage and operation time, the vehicle's maintenance schedule and important cautionary messages.

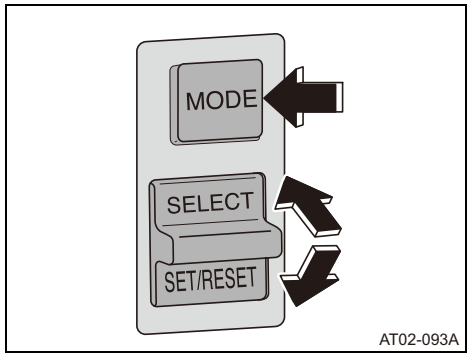

AT02-093A

**CONTROL SWITCH**

The main menu is displayed by pushing the “**MODE**” button. Choose an item on the display by pushing the switch up for the “**SELECT**” and push the switch down for “**SET/RESET**”.

To reset the display, push and hold down the switch for “**SET/ RESET**”.

**⚠ WARNING**

**Never operate the control switch while driving. Inattention to road and traffic conditions may cause an accident resulting in death or serious injury.**

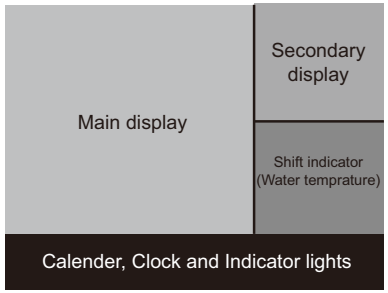

AT02-094A

**DISPLAY**

**Main display—**the main display is used to choose an item by pushing the control switch, and shows vehicle conditions and driving factors. In the event that a certain problem is detected, cautionary information appears on the main display.

**Secondary display—**the secondary display shows optional information selected in the main display.

**Shift indicator—**this area shows the position of the shift indicator for vehicles equipped with the automatic transmission. For a manual transmission, this display shows engine coolant (water) temperature.

***NOTICE:***

*It the vehicle is equipped with automatic transmission, if the display is blinking, it may be more difficult for the automatic transmission to shift from one range to another. See "Delay in shifting" on page 2-80.*

**Calender, Clock and Indicator lights—** This display shows a calendar and clock. In case certain vehicle failures are detected, corresponding indicator light are displayed in this area.

**The information display shows two different groups of information.**

- **Vehicle conditions and driving factors.**

  This group includes the trip meter, fuel consumption monitor, cruise control setting speed, average speed, operation time, the DPR, and vehicle and engine maintenance information.

- **Warning and cautionary information.**

  Warning and cautionary information will be automatically shown. If such a warning or caution appears, immediate attention is required. In such a situation, perform "Self diagnosis system" see page 2-101.

***NOTICE:***

*Turning the key to the "**ON**" position activates the information display and the display shows the last message previously shown.*

**The following flow chart explains the way the information display provides you with data.** If the system was previously shut off, the first screen you will see is the Hino trademark. After that, you will see the last message previously shown.

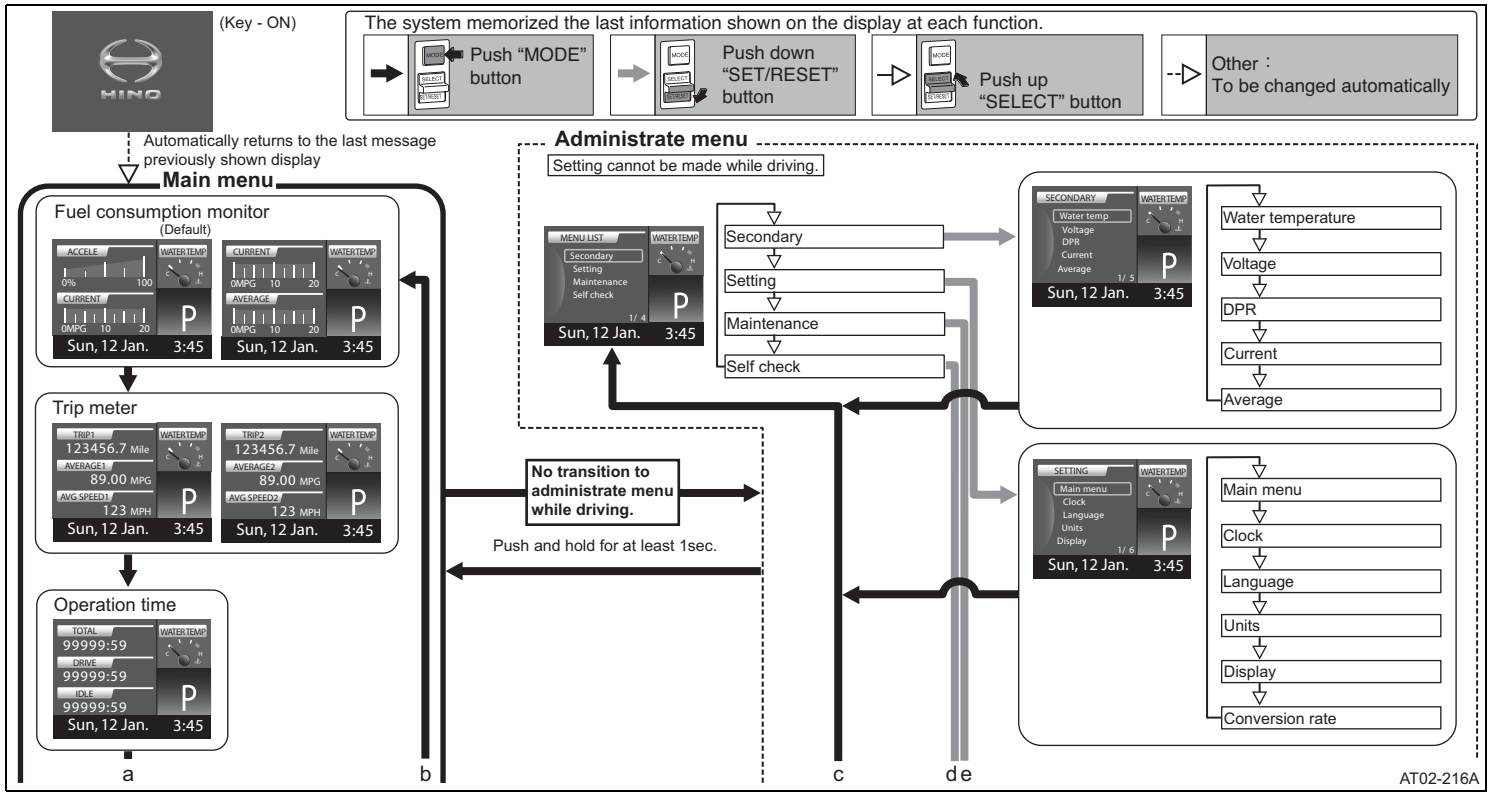
(Key - ON)
The system memorized the last information shown on the display at each function.
Push “MODE” button
Push down “SET/RESET” button
Push up “SELECT” button
Other：
To be changed automatically
Automatically returns to the last message previously shown display
Main menu
Fuel consumption monitor
(Default)
Trip meter
Operation time
Administrate menu
Setting cannot be made while driving.
Secondary
Setting
Maintenance
Self check
Water temperature
Voltage
DPR
Current
Average
Main menu
Clock
Language
Units
Display
Conversion rate
No transition to administrate menu while driving.
Push and hold for at least 1sec.
a
b
c
d
e
AT02-216A

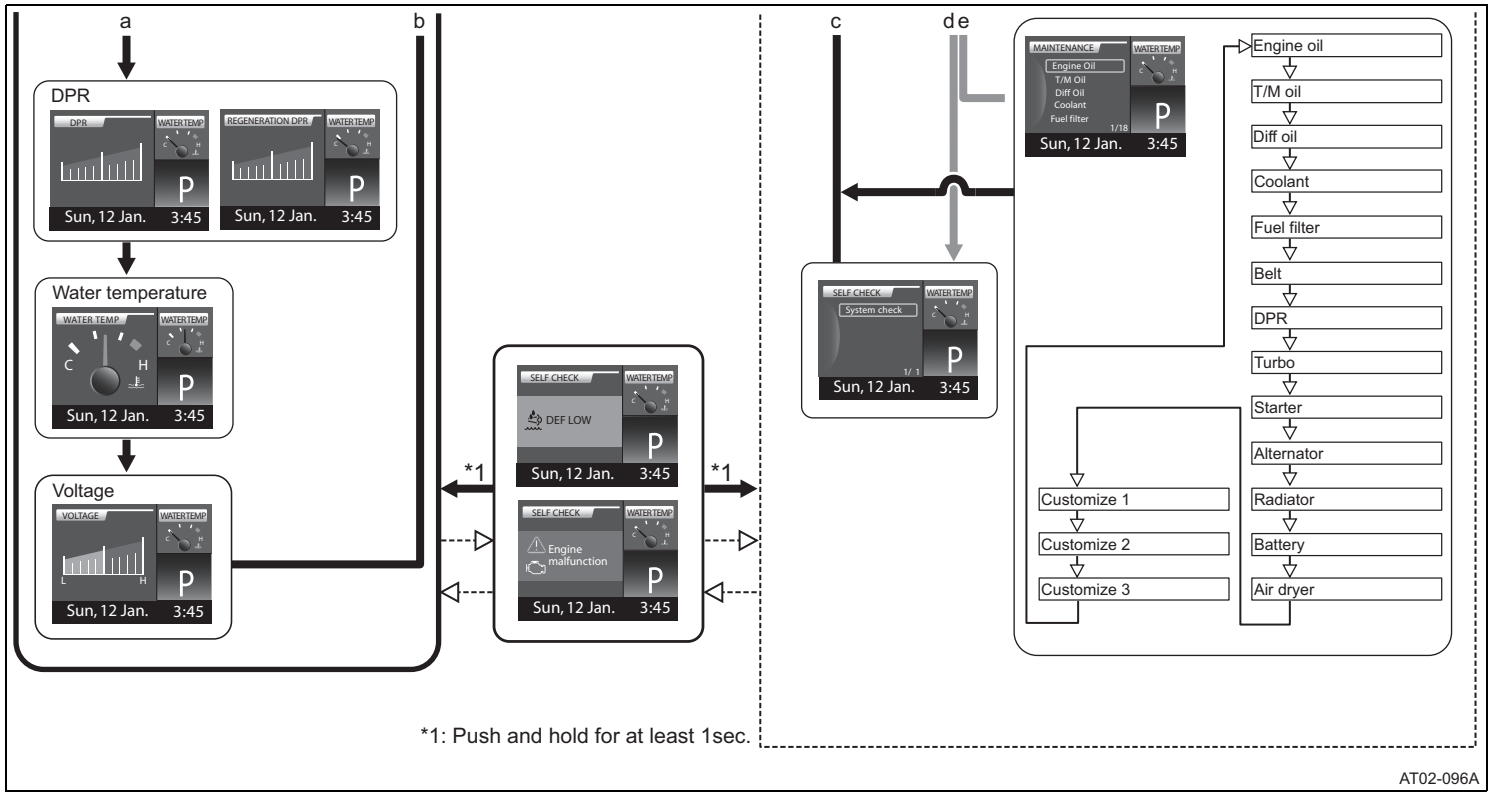
a
b
c
d
e
DPR
Water temperature
Voltage
*1
*1
*1: Push and hold for at least 1sec.
Engine oil
T/M oil
Diff oil
Coolant
Fuel filter
Belt
DPR
Turbo
Starter
Alternator
Radiator
Battery
Air dryer
Customize 1
Customize 2
Customize 3
DEF LOW
Engine malfunction
System check
Sun, 12 Jan. 3:45
AT02-096A

### —Main display

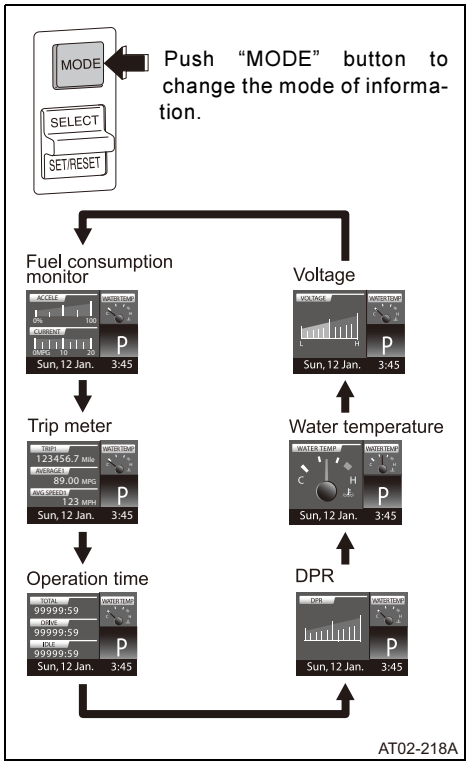


### —Fuel consumption monitor

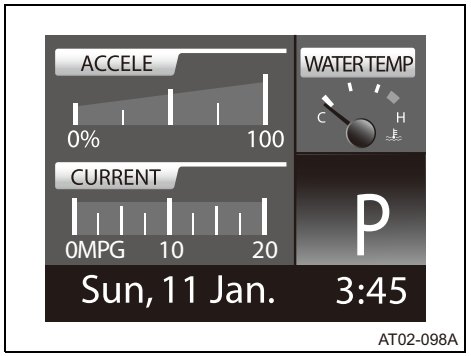


**Accelerator/Current (Default)**

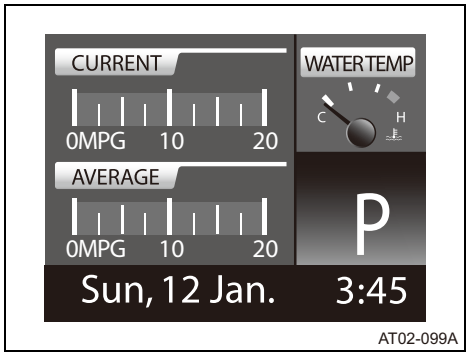


**Current/Average**

**Default display is “ACCELE/CURRENT”.**

To switch the display to “**CURRENT/AVERAGE**”, see “MAIN MENU” on page 2-96.

- “**ACCELE**” shows the value of the accelerator (throttle) position by graphical representation.
- “**CURRENT**” shows the current fuel consumption.
- “**AVERAGE**” shows the average value of the fuel consumption.
- Reset of the value is done with values of “**Trip 1**” (see page 2-93).

### —Trip meter

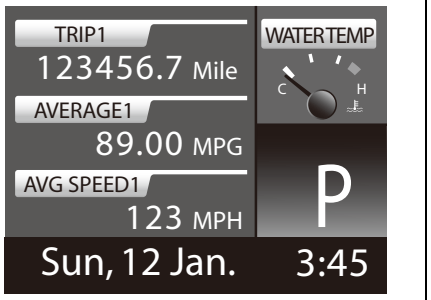


AT02-100A

**The trip meter shows the total distance the vehicle has been driving since the last reset of the trip meter on the upper part of the display. The lower part of display shows fuel consumption and average speed of the vehicle.**

Push the switch up to enable the "**SELECT**" function to shift the display between "**TRIP 1**" and "**TRIP 2**".

- The values on "**TRIP 1**" and "**AVG SPEED 1**" will be reset at the same time by pushing and holding the switch of the "**SET/RESET**" button down for at least 1 second. (The values of the fuel consumption monitor is also reset with "**TRIP 1**").

### —Operation time

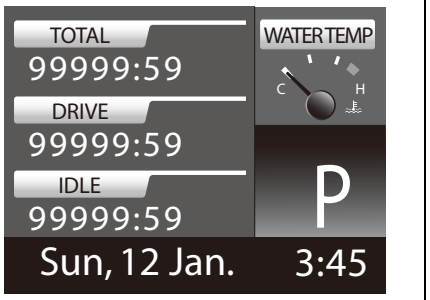


AT02-217A

**The display shows total running time, driving time and idling time of the vehicle in minutes and seconds.**

- "**TOTAL**" shows the time from engine start to engine stop.
- "**DRIVE**" or "**IDLE**" shows the time of total driving time and total engine idling time.

**—DPR**

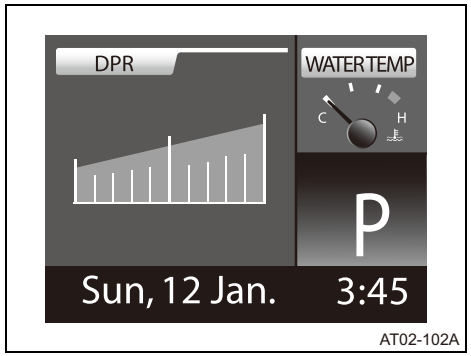


**This gauge shows the amount of soot in the DPR.**

When the gauge reading reaches the 5th bar, both the DPR indicator light on the instrument cluster (See page 2-73) and the indicator light on the DPR manual regeneration switch (See page 3-37) start to blink continuously, and the display shows “DPR MANUAL REGEN REQUIRED” See page 2-109.

In such a case, manual regeneration of the DPR is required. See “Manual regeneration” on page 3-37 for the procedure.

For details regarding the DPR gauge, see pages 3-38 and 3-39.

**—Water temperature gauge**

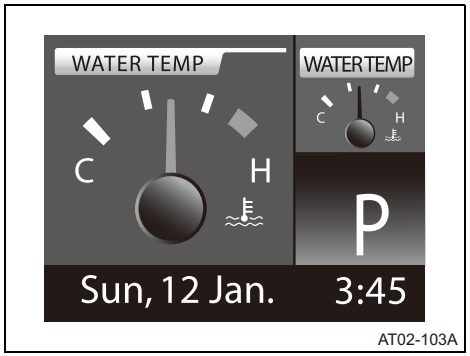


**This gauge indicates the engine coolant (water) temperature.**

The engine coolant temperature varies with the outside air temperature and driving conditions. (See page 2-64)

### —Voltage meter

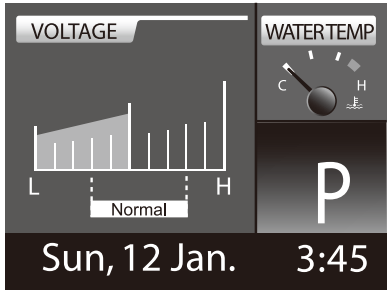


AT02-104A

**This gauge indicates battery voltage.**

When the gauge reading is between 4th and 8th bar, voltage is normal.

**L:** Discharged
**H:** Over-charged

### —Menu list

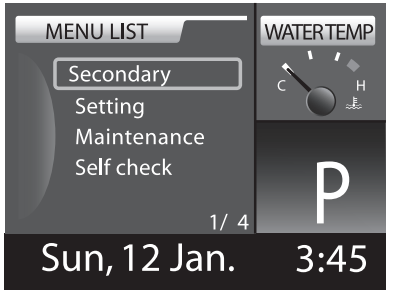


AT02-105A

Scroll up to select the optional item and push the switch down for "**SET/RESET**". To cancel the setting, push the "**MODE**" button.

**Available selections:**

—Secondary
—Setting
—Maintenance
—Self check

### —Secondary

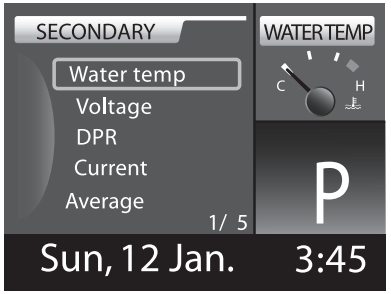


AT02-106A

**This menu allows you to select the optional information for the secondary display.**

**Available selections:**

—Water temp
—Voltage
—DPR
—Current
—Average

## —Setting

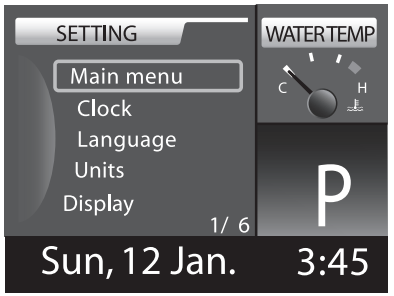


AT02-107A

**This menu allows you to adjust the display settings.**

Scroll up to select the item and push the switch down for "**SET/RESET**". To cancel the setting, push the "**MODE**" button.

**Available selections:**

—Main menu
—Clock
—Language
—Units
—Display
—Conversion rate

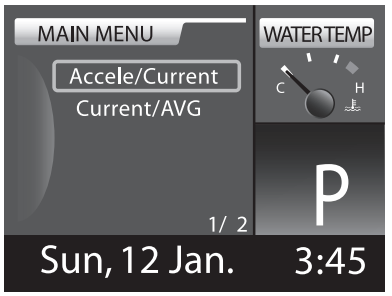


AT02-108A

**MAIN MENU**

1. Scroll up to select [**Main menu**] then push the switch down for "**SET/RESET**".
   To cancel the setting, push the "**MODE**" button.
2. Scroll up to select the optional item and push the switch down for "**SET/RESET**".

**Available selections:**

—Accelerator/Current
—Current/Average




AT02-109A

**CLOCK**

1. Scroll up to select [**Clock**] then push the switch down for "**SET/RESET**".
   To cancel the setting, push the "**MODE**" button.
2. Push the switch up for "**SELECT**" to adjust the '**Year**' to the desired number ('**Year**' is blinking). Push and hold the switch up for "**SELECT**" to fast forward.

3. Push the switch down for “**SET/RESET**”, and ‘**Month**’ blinks. Push the switch up for “**SELECT**” to adjust ‘**Month**’ to the desired number.
4. In the same way, adjust ‘**Day**’, ‘**Hour**’ and ‘**Minute**’ to the desired setting.

After adjustment, display automatically returns to the information previously shown.



AT02-110A

**LANGUAGE**

**This allows you to change the language shown on the display.**

1. Scroll up and select [**Language**] then push the switch down for “**SET/RESET**”.
   To cancel the setting, push the “**MODE**” button.
2. Scroll up and select the preferred setting item and push the switch down for “**SET/RESET**”.

**Available languages:**

—English
—Français
—Español

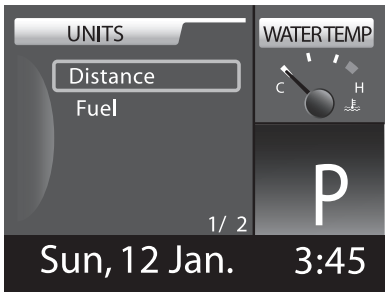


AT02-111A

**UNITS**

1. Scroll up to select [**Units**] then push the switch down for "**SET/RESET**". To cancel the setting, push the "**MODE**" button.
2. Scroll up and select [**Distance**] or [**Fuel**] and push the switch down for "**SET/RESET**".

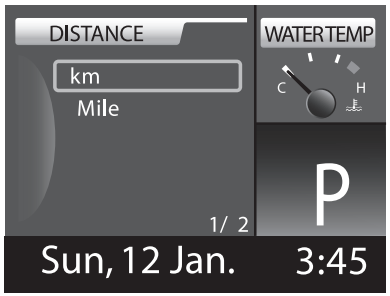


AT02-112A

**DISTANCE**

Scroll up to select the preferred setting item then push the switch down for "**SET/RESET**".
To cancel the setting, push the "**MODE**" button.

**Available units: Distance**

—km
—Mile

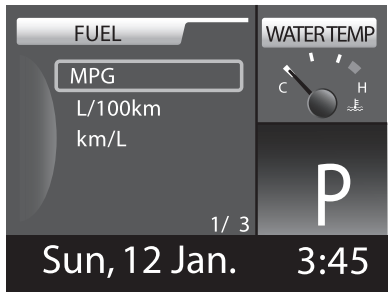


AT02-113A

**FUEL**

Scroll up to select the preferred setting item then push the switch down for "**SET/RESET**".
To cancel the setting, push the "**MODE"** button.

**Available units: Fuel**

—MPG
—L/100 km
—km/L

## —Display

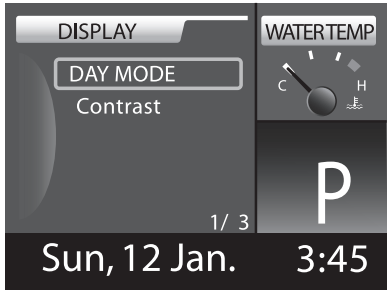


AT02-114A

**This menu allows you to turn on and off the display and adjust the image.**

Scroll up to select **[Display]** then push the switch down for “**SET/RESET**”.
To cancel the setting, push the “**MODE**” button.

**Available setting items:**

—DAY MODE
—Contrast




AT02-115A

**DAY MODE**

**This menu allows you to select either on or off for the day mode of the information display.**

Select the desired setting item then push the switch down for “**SET/RESET**”.

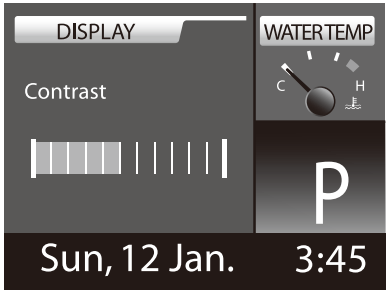


AT02-116A

**CONTRAST**

**Allows you to adjust the screen contrast.**

Adjust the display contrast by pushing the switch up for “**SELECT**”.
Each time you push the switch up for “**SELECT**”, the display contrast changes.

## —Maintenance

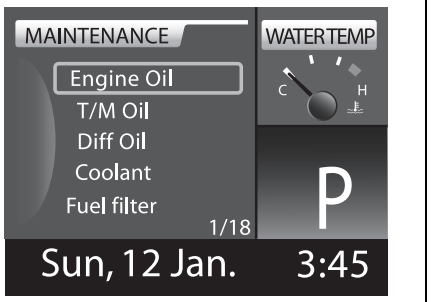

AT02-117A

1. Scroll up to select [**Maintenance**] then push the switch down for "**SET/RESET**". To cancel the setting, push the "**MODE**" button.
2. Scroll up to select the desired setting item then push the switch down for "**SET/RESET**".
   To cancel the setting, push "**MODE**" button.

**Available setting items:**

—Engine Oil
—T/M Oil
—Diff Oil
—Coolant
—Fuel filter
—Belt
—DPR
—Turbo
—Starter
—Alternator
—Radiator
—Battery
—Air dryer
—Customize 1
—Customize 2
—Customize 3

**Customize—**You can change the default setting of the maintenance schedule items.

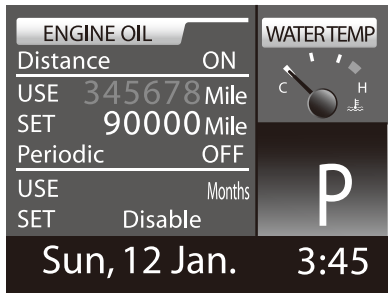

AT02-118A

**To reset the values, push the switch down for "SET/RESET" for at least 1 second.**

**To set the value;**

1. Push and hold the switch up for "**SELECT**" for at least 1 second.
2. Push the switch up for "**SELECT**" to select the [**OFF**] (default is "**OFF**") for 'Distance' and push the switch down for "**SET/RESET**" for at least 1 second to change to "**ON**". (If the display shows [**ON**], it will change to "**OFF**".)

3. Push the switch up for “**SELECT**” to set the mileage to the appropriate hundreds of thousands of miles, the chosen number will be blinking. You may also push and hold the switch up for “**SELECT**” to fast forward to the chosen number.
4. Push the switch down for “**SET/RESET**” to set the mileage to the appropriate tens of thousands of miles. **The chosen number will be blinking.** Push the switch up for the “**SELECT**” button to set the number of ‘**10 thousand’s place**’ to the chosen number.
5. In the same way, adjust the mileage to the appropriate thousands.
6. After setting, push the switch down tor “**SET/RESET**” for completion of the mileage setting process.
7. Push the “**MODE**” button once to return to the setting menu and push the “**MODE**” button again to return to the MAINTENANCE menu.

If you select “**0**” for all setting values, then “**Disable**” is shown and set to ‘**OFF**’ automatically.

**In the same way as Distance, ‘Periodic’ (in months) can be chosen for the desired setting also.**

***NOTICE:***

*Either ‘Distance’ or ‘Periodic’ can be set “ON” at a setting.*

**Available setting values:**

**Distance:**

For U.S.A. : 1,000—599,000 mile
For Canada : 1,000—999,000 km

**Periodic:**

1—99 months

**—Self diagnosis system**

**⚠ WARNING**

**For your safety, when the Malfunction Indicator Light comes on, record the “ACTIVE” or “INACTIVE” trouble code in accordance with the following procedures, and immediately contact your Hino dealer.**

**If a certain problem is detected by the system, the display will show both the warnings with respect to the problem and the trouble codes.**

**Keep the key in “ON” position, push and hold the “Mode” button for activating the Self diagnosis system.**

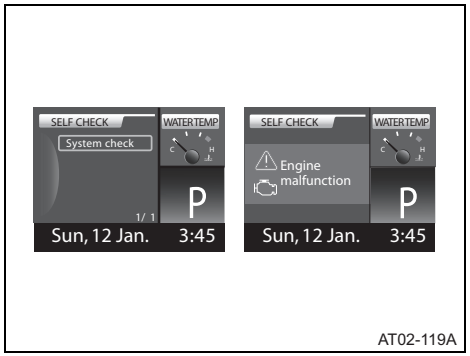


AT02-119A

**If the information display shows “SELF CHECK”;**

1. Confirm that the ‘System check’ menu is selected and push the switch down for “**SET/RESET**”.

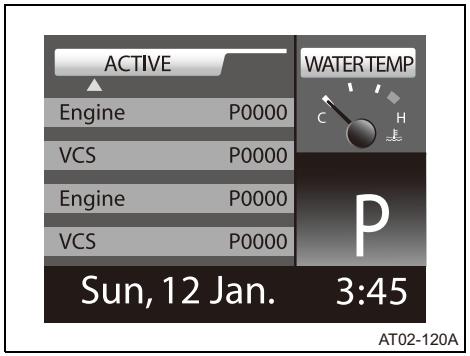


AT02-120A

2. Push and hold the switch up for “**SELECT**” until the display shows “**ACTIVE**” trouble code.

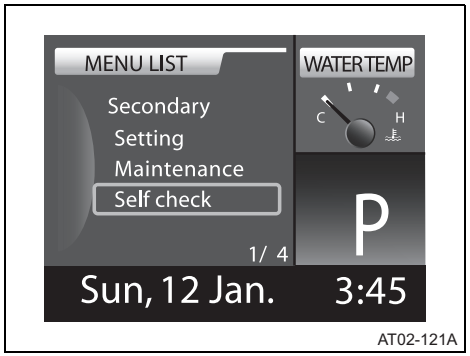


AT02-121A

**If the information display shows “MENU LIST”;**

1. Select the ‘Self check’ menu and push the switch down for “**SET/RESET**”.

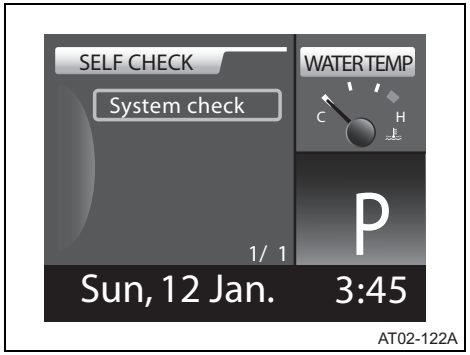

AT02-122A

2. Confirm that ‘System check’ menu is selected and push the switch down for “**SET/RESET**”.

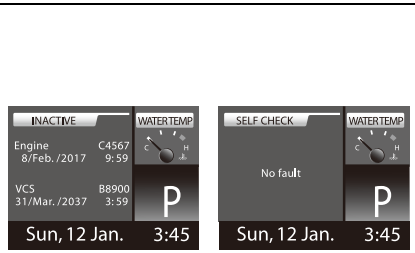

AT02-123A

3. Push and hold the switch up for “**SELECT**” until the display shows the “**INACTIVE**” trouble code or ‘No Fault’.

**⚠ WARNING**

**If the display shows a warning, immediately have your vehicle checked and repaired at your Hino dealer.**

**See “Warning and indicator display” on page 2-103 for more details regarding the warning and indicator message.**

## —Warning and indicator display

(EXAMPLE)

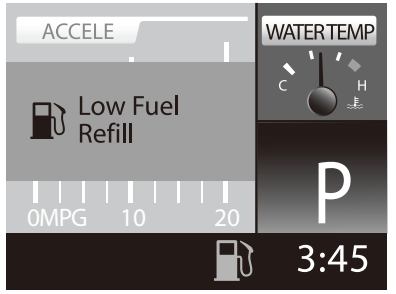

AT02-124A

**⚠ WARNING**

**Warning and cautionary information will be automatically shown. If such a warning or caution appears, immediate attention is required.**

**Ignoring warning and cautionary information may result in death or serious injury or malfunction of your vehicle.**

**Press the “MODE” switch for at least 1 second to release the warning information.**

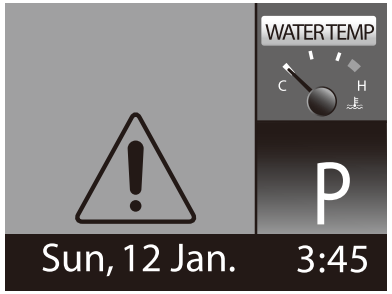


AT02-125A

**INSTRUMENT CLUSTER MALFUNCTION**

This warning message will appear if instrument cluster malfunction is detected.




AT02-126A

**ENGINE MALFUNCTION**

This warning message will appear if a potential engine control system malfunction is detected.

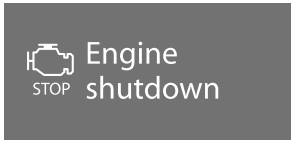


AT02-127A

**ENGINE SHUTDOWN (IF SO EQUIPPED)**

This warning message will appear in case that the automatic shutdown system stops the engine due to engine overheating or low engine oil pressure.

Keep the engine at idle for several minutes prior to turning off the engine, particularly after a long run where the engine has been producing maximum horsepower and heat load. This allows the heat to be dissipated from the engine and be evenly distributed throughout the various engine systems.

Vehicles are equipped with an automatic shutdown system which stops the engine in the event of engine overheating or low engine oil pressure. A warning message on the information display along with a beep sound will indicate engine overheating or low oil pressure.

If the temperature and/or oil pressure exceed their permissible ranges, the engine will automatically shut down.

Vehicles equipped with the automatic shutdown system are also equipped with an override feature which will allow the engine to be restarted so that the vehicle can be operated, if mechanically capable.

To activate the override system, turn the key to the "**LOCK**" position. Then turn the key to the "**START**" position to restart the engine.

You may not start the engine when the engine shutdown is due to either low oil pressure or high coolant temperature.

***NOTICE:***

*If the engine shutdown function is needed for a particular vehicle, contact your Hino dealer.*



AT02-128A

**LOW COOLANT**

This warning message will appear if the engine coolant level is low.

After the coolant level warning light comes on, confirm the volume of coolant in the reservoir. Check to see if coolant is leaking from the cooling system.

See "Engine coolant" on page 6-5 for checking the coolant level.

If coolant is leaking, do the following:

1. If the reservoir is empty: If leakage of coolant is found, have your Hino dealer check and repair it. If there is no leakage of coolant, wait until the engine and radiator have cooled down and replenish the radiator and/or the reservoir tank.
2. If there is coolant in the reservoir tank: Have your Hino dealer check and repair the leak.

**⚠ CAUTION**

**If the "Low Coolant" warning message comes on and/or the beep sounds while driving, pull off the road immediately and stop your vehicle safely and carefully.**



AT02-129A

**LOW OIL PRESSURE**

This warning message will appear if the engine oil pressure is not high enough for safe operation of the vehicle.

**⚠ CAUTION**

**If the “Low Oil Pressure” warning message shows up and the beep sounds while driving, pull off the road and safely stop the engine immediately.**

**Have your Hino dealer check oil pressure and correct the condition. Continuing to drive with low oil pressure can result in serious damage to the engine.**

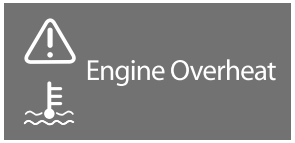

AT02-130A

**ENGINE OVERHEAT**

This warning message will appear if the engine is overheating.

See the discussion “Engine Overheating” on page 4-13.

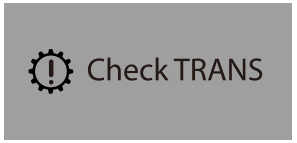

AT02-210A

**CHECK TRANS**

**—Allison® 2200HS, 2200RDS, 2500RDS, 3000RDS and 3500RDS**

This warning message will appear if the malfunction of the automatic transmission is detected.

**⚠ WARNING**

**The “Check TRANS” indicates that a problem with the automatic transmission has been detected. In such case, have your Hino dealer check and repair the transmission immediately. If the condition has been detected, the ECU will register a diagnostic code and upshifts/downshifts and/or direction changes will be restricted or disabled, depending on the condition.**



AT02-211A

**TRANS OIL TEMP**

This warning message will appear when the automatic transmission fluid temperature exceeds specified limits. If the transmission overheats during normal operations, do the following. Stop the vehicle, check the fluid level in the transmission (see page 6-136 for detail) and the cooling system (see page 6-5).

If the transmission and the cooling systems are functioning properly, depress the accelerator pedal to run the engine at 1,200-1,500 rpm (r/min.) with the transmission in the "**N**" position. This should reduce the transmission and engine temperature to normal operating levels in 2 or 3 minutes. If the temperature does not decrease, release the accelerator pedal to reduce the engine rpm (r/min.).

If high temperature in either the engine or transmission persists, stop the engine, contact and have the overheating condition investigated by maintenance personnel at your Hino dealer.

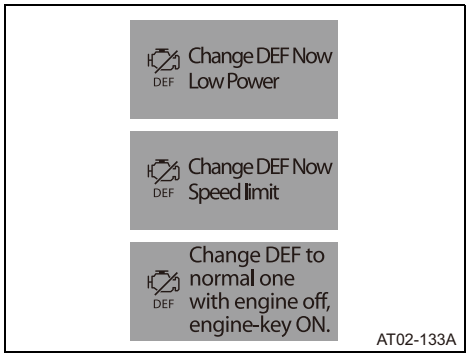

AT02-133A

**CHANGE DEF NOW**

One of these warning messages will appear in the information display when improper DEF quality is detected.

**Voice Warning:**

"Change DEF"

***NOTICE:***

- *When changing the DEF, place (leave) the key in "**ON**" position.*
- *When changing the DEF, be sure to use the API-certified DEF and replenish the DEF tank with DEF up to the "**F**" level of the level gauge on the tank.*

**⚠ WARNING**

**Do not ignore these warning messages. Otherwise, the engine torque and the vehicle speed will be restricted.**
**For further information, see page 3-30.**

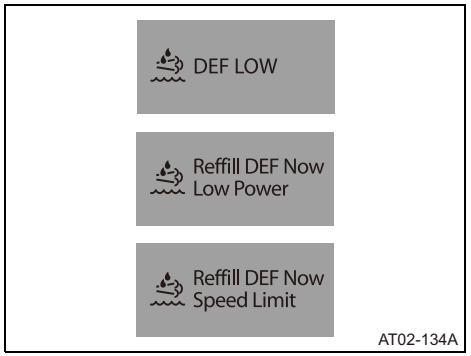


**DEF LOW**

One of these warning messages will appear in the information display when the DEF level in the DEF tank is getting low. Replenish the DEF tank with DEF up to the “**F**” level of the level gauge on the tank as soon as possible after one of these messages appears in the information display and before the DEF gauge in the instrument cluster reaches “**E**” position.

**Voice Warning:**

“Refill DEF”

**⚠ WARNING**

**Do not ignore these warning messages. Otherwise, the engine torque and the vehicle speed will be restricted.**
**For further information, see page 3-29.**

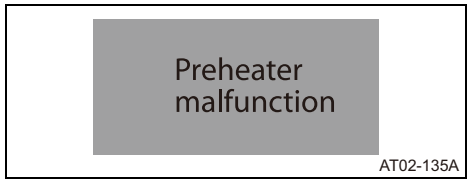


**PREHEATER MALFUNCTION**

This warning message will appear if a preheater malfunction is detected.

When the message appears, have your vehicle checked and repaired at your Hino dealer.

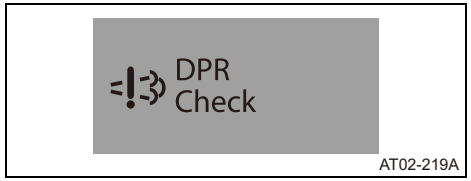


**DPR CHECK**

This warning message will appear if a DPR malfunction is detected.

When the message appears, have your vehicle checked and repaired at your Hino dealer.

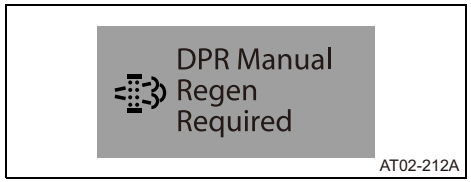


**DPR MANUAL REGEN REQUIRED**

The DPR indicator light blinks when DPR manual regeneration is required.

When the DPR indicator light starts to blink, follow the instructions on page 3-37.

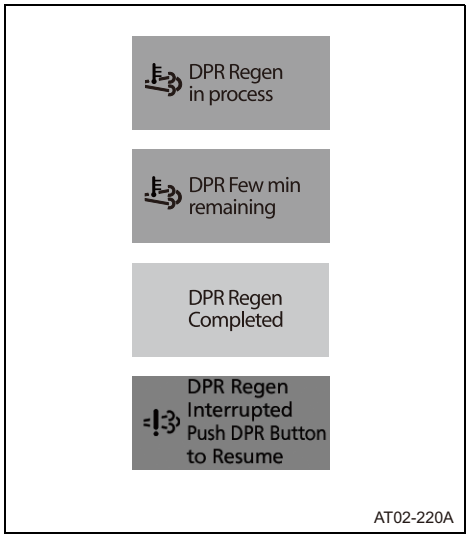

**DPR REGEN IN PROCESS—**this indicates that the DPR regeneration is in process while the vehicle is stopped with engine running.

**DPR FEW MIN REMAINING—**this indicates that the DPR regeneration will be complete within a few minutes.

**DPR REGEN COMPLETED—**this indicates that the DPR regeneration has been completed and this vehicle may be driven.

**DPR REGEN INTERRUPTED PUSH DPR BUTTON TO RESUME—**this indicates that the DPR manual regeneration is interrupted by driver's operation or the like and will blink with a sound. If this message appears, follow the instructions on page 3-37 to perform DPR manual regeneration again.

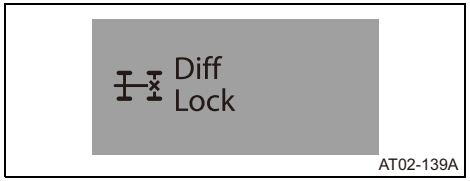

AT02-139A

**DIFF LOCK**

This warning message will appear when the differential lock system is on. See "Differential lock (if so equipped)" on page 3-40.

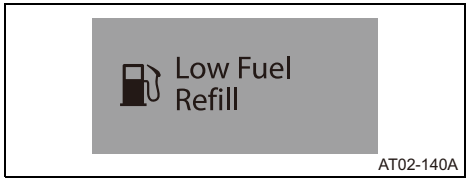

AT02-140A

**LOW FUEL REFILL**

This warning message will appear when the fuel level in the tank is getting low. Refuel the vehicle as soon as it is convenient, and before the fuel gauge reaches the empty "**E**" position.



AT02-141A

**WATER IN FUEL**

This warning alerts you that the amount of accumulated water in the fuel filter has reached a specified maximum permissible level. If this light comes on, drain the accumulated water immediately. See "Fuel system" on page 6-60 and "Drain water" on page 6-145.

**⚠ WARNING**

**If "Water in fuel" warning message appears, park the vehicle in a safe place and stop the engine immediately. Contact your Hino dealer to have your vehicle checked and repaired.**

**Otherwise, the engine of your vehicle may be damaged, which may cause an accident, resulting in death or serious injury.**



AT02-142A

**SCR MALFUNCTION**

This warning will appear if the DEF-SCR has, in some way, been compromised and there is an improper level of exhaust gases. It could be as the result of improper tampering, or as the result of a system malfunction. See “Warning for malfunction of DEF-SCR system” on page 3-33.

To determine if the malfunction is continuing, or occurred in past, check the “Self diagnosis system” which will indicate “ACTIVE” or “INACTIVE”. See “Self diagnosis system” on page 2-101.

If the “P204F” is in the “ACTIVE” (present) trouble code list, then have your vehicle checked and repaired at your Hino dealer immediately.

**⚠ WARNING**

**Heed the SCR warning. If you ignore the warning, your vehicle will be restricted in its torque or its rotation speed.**

**For more information, see page 3-33.**



AT02-143A

**VCS (VEHICLE CONTROL SYSTEM) MALFUNCTION**

This warning will appear if a VCS malfunction is detected.

When the message appears, have your vehicle checked and repaired at your Hino dealer.



AT02-144A

**BRAKE SWITCH MALFUNCTION**

This warning will appear if a brake switch malfunction is detected.

When the message appears, have your vehicle checked and repaired at your Hino dealer.




**PTO SET** (If so equipped)
This message appears for 5 seconds when the PTO switch is ON.

For PTO operation, see the body manufacturer's instruction manual.




**PTO PRESET** (If so equipped)
This message appears for 5 seconds when the preset PTO switch is ON can be used as a PTO accelerator.

For PTO operation, see the body manufacturer's instruction manual.

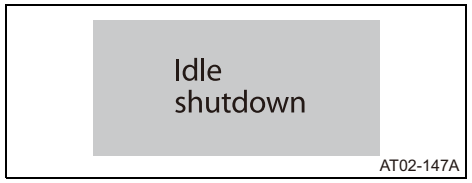


**IDLE SHUTDOWN** (If so equipped)
This message appears just before the idle shutdown operates.

**—Maintenance information message**

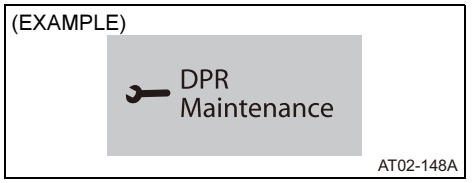


**Available displays:**

—DPR Maintenance
—SCR Maintenance
—Engine Oil Change
—TRANS Oil Change
—Diff oil Change
—Coolant Change
—Fuel filter Change
—Belt Change
—Turbo Check
—Starter Overhaul
—Alternator Overhaul
—Radiator Check
—Battery Check
—Air dryer Change
—Customize 1
—Customize 2
—Customize 3

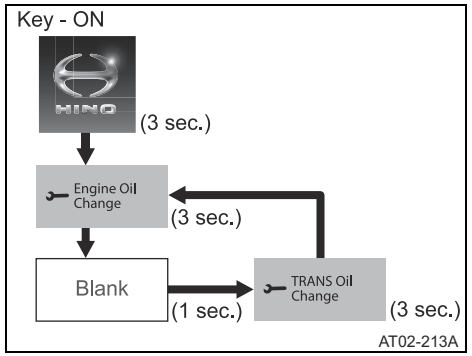


When the key is the "**ON**" position, is shown for 3 second. Then maintenance messages appear repeatedly for 3 seconds until vehicle speed reaches 12 mph (20 km/h).

***NOTICE:***

*DPR and SCR maintenance information are automatically displayed according to the maintenance interval of each system.*

## Pedals

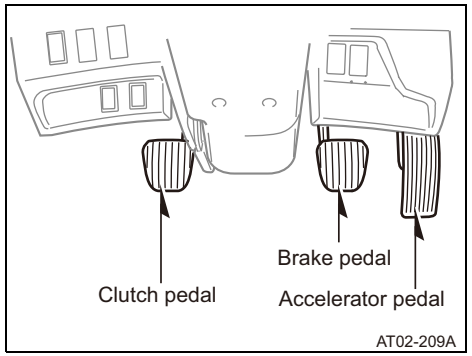


### ACCELERATOR PEDAL

Acceleration is controlled by pressing down on the accelerator pedal which is connected to the fuel system. Release the accelerator pedal for deceleration.

### BRAKE PEDAL

An hydraulic power brake system or full air brake system is installed in the vehicle. The service brake is applied by pressing down on the brake pedal.

#### Hydraulic power brake system

Disc type brakes with split system connections are used on all hydraulic power brake equipped chassis. An hydraulic power brake system utilizes the hydraulic power steering pump to assist the driver by reducing the driver - applied force required at the brake pedal. The system also has an electrically powered back-up power assist function in the event of a malfunction in the hydraulic power pump system or loss of engine power.

### CLUTCH PEDAL

On vehicles with manual transmission, a clutch pedal is used to engage or disengage the clutch, which connects or disconnects the engine from the power train.

**⚠ WARNING**

- **Never allow any objects such as cans or debris to remain on the floor of the vehicle. Such items could get caught under the brake pedal or clutch pedal and prevent the driver from braking or changing gears. Remove all cans, debris and other objects from under the seat and the brake pedal.**
- **Never allow the floor mat to be caught between the brake pedal and the floor. It may cause the dragging of the brake pedal.**

### Exhaust brake switch

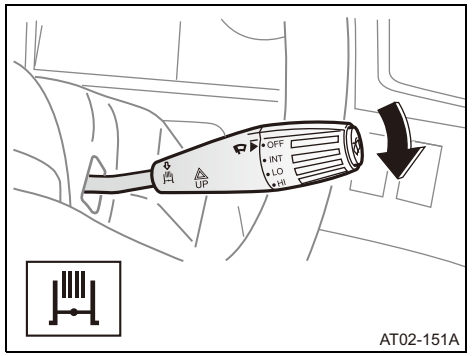


**To operate the exhaust brake, pull the lever towards you. This will apply the brakes as the accelerator pedal is released.**

The indicator light on the instrument cluster shows that the exhaust brake is ready for the operation. The exhaust brake enhances the normal engine braking effect and helps reduce foot brake applications. Use it when driving down a steep or long grade with heavy loads or when slowing down from high speed.

While driving with the exhaust brake, exhaust braking will be temporarily cancelled automatically in the following situations. (The exhaust brake indicator light will not be lit.)

- **When the clutch pedal is depressed.**
- **When the transmission is in neutral position after shifting.**
- **When the ABS is turned on.**
- **When the engine speed decreases to less than 755 rpm (r/min), the exhaust brake will turn off automatically, even if the exhaust brake switch has been activated.**

### Parking brake lever (Toggle type)——Hydraulic brake type

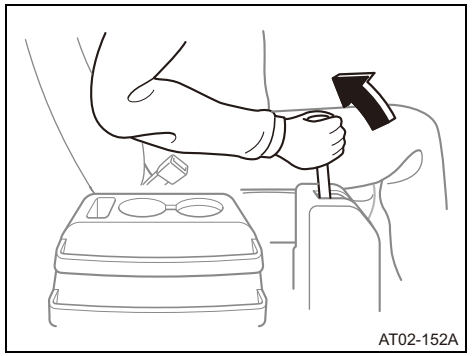
AT02-152A

**To apply the parking brake:** Pull up the lever and the parking brake will be applied at the transmission output shaft by way of cable and linkage.

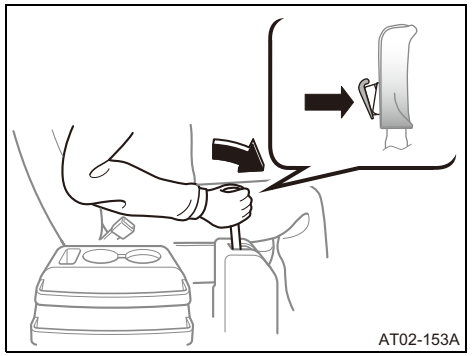
AT02-153A

**To release the parking brake:** Push in the lever release button. Then, while holding the button in, push the lever down all the way.

**Grip the lever firmly and push it down slowly.**

**⚠ WARNING**

- **Never apply the parking brake while driving except in an emergency situation. Using the parking brake while driving will make the rear wheel lock up and the vehicle will become unstable, resulting in death or serious injury in an accident.**
- **After using the parking brake in an emergency situation, have it inspected by your Hino dealer for damage.**
- **Never drive with the parking brake applied. This can cause accelerated abrasion and overheating of the brake components which can result in reduced braking effectiveness or a fire.**
- **When parking the vehicle, apply the parking brake firmly and make sure that your vehicle holds in place.**

- **When parking on a slope, apply the parking brake firmly and block all the wheels.**
- **Do not slam the parking brake lever down to release it, as this could cause malfunctions such as wear of the lever bracket to accelerate, making the parking brake nonfunctional.**

### Parking brake control knob——Full air brake type

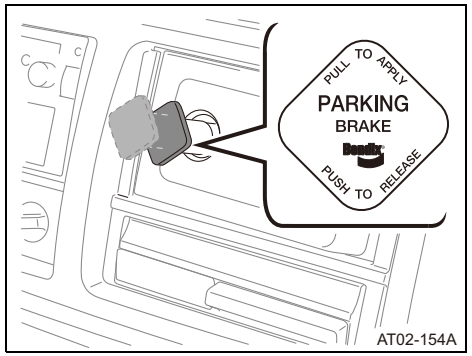


A powerful coil spring mechanically applies the rear axle brake shoes whenever air pressure against the spring is released.

**To apply the parking brake, pull the parking brake control knob out. Use the parking brake control knob for parking purposes only.**

**To release the parking brake, push the parking brake control knob.**

If the air pressure supplied to this valve is reduced to 20—30 lb/in$^2$ (1.4—2.1 kg/cm$^2$), the parking brake control knob pops out and the parking brake is applied automatically.

H1-A038E01.book 117 ページ ２０１６年１０月１９日 水曜日 午後５時２６分

# SECTION 2 – 7

## OPERATION OF INSTRUMENTS AND CONTROLS

### Audio system

Reference.....2-118

Using your audio system.....2-118

Read the entire manual before using the vehicle. Failure to follow instructions, warnings and safety precautions could result in death, serious injury and/or damage to the vehicle.

## Reference

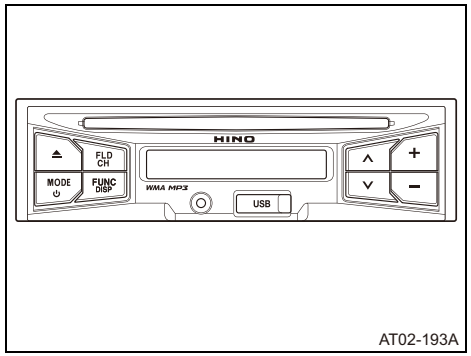


**FM-AM radio/compact disc player**

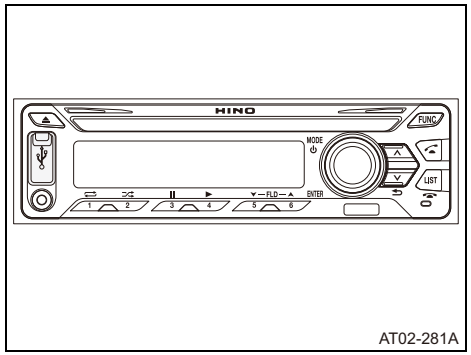


**Radio and CD/USB player with Bluetooth®**

## Using your audio system— —Some basics

This section describes some of the basic features on Hino audio systems. Some information may not apply to your system.

Your audio system works when the key is in the “**ACC**” or “**ON**” position.

### TURNING THE SYSTEM ON AND OFF

Push “**MODE/Power**” to turn the audio system on and off.

You can turn on the disc player by inserting a compact disc.

You can turn off disc player by ejecting the compact disc. If the audio system was previously off, then the entire audio system will be turned off when you eject the compact disc. If the another function was previously activated, it will return to the previous function.

### SWITCHING BETWEEN FUNCTIONS

Push “**MODE/Power**” if the system is already on but you want to switch from one function to another.

### TONE AND BALANCE

For details about your system’s tone and balance controls, see the description of your own system.

#### Tone

The sound quality of an audio program is largely determined by the adjustment of the treble and bass levels.

#### Balance

A good balance of the left and right stereo channels is also important for sound quality.

Keep in mind that if you are listening to a stereo recording or broadcast, changing the right/left balance will increase the volume of one side while decreasing the other.

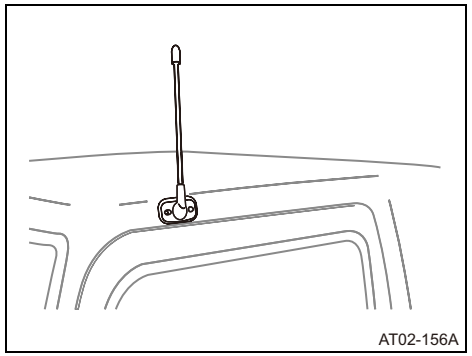


**Radio antenna**

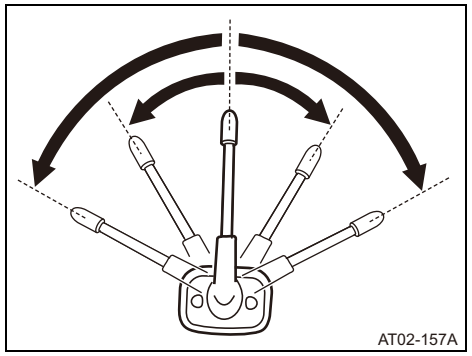


## YOUR RADIO ANTENNA

**Raise the antenna when listening to the radio.**

The antenna is installed on the upper side of the driver's side door.

The angle of the antenna is adjustable to 5 different positions. Hold the lower portion of the antenna when adjusting it.

The antenna is a removable screw-in type. When washing the vehicle at an automatic car wash, remove the antenna. Then put the rubber cap that came with the vehicle on the antenna hole. Reinstall the antenna after washing.

***NOTICE:***

*When running the vehicle on a place where the antenna can hit trees, lay the antenna forward or backward temporarily to avoid it from being damaged.*

**HINT:**

**The radio cannot be operated at its full performance if the antenna is not raised upright.**

## YOUR COMPACT DISC PLAYER

When you insert a disc, gently push it in with the label side up. (The player will automatically eject a disc if the label side is down.) The compact disc player will play the disc from track 1 through the end of the disc and repeat the disc from track 1 again.

***NOTICE:***

*Never try to disassemble or oil any part of the compact disc player. Do not insert anything except a compact disc into the slot.*

**The disc player is intended for use with 4.7 in. (12 cm) discs only.**

**—FM-AM radio/compact disc player**

**PRECAUTIONS**

**⚠ WARNING**

- **Operate the player only while the vehicle is stationary. Operating them while the vehicle is moving could cause an accident.**
- **Adjust the volume so that sound outside of the vehicle can be heard. If outside sound cannot be heard, accidents may be harder to avoid.**

***NOTICE:***

*Do not allow water to come into contact with the player. It may cause damage to the player.*

**HINT:**

**Do not install a radio equipment antenna near the vehicle's radio antenna. This could cause unwanted noise on the radio or while playing a CD.**

**CONTROL PANEL**

The audio system can be used when the starter switch is in the “**ACC**” or “**ON**” position.

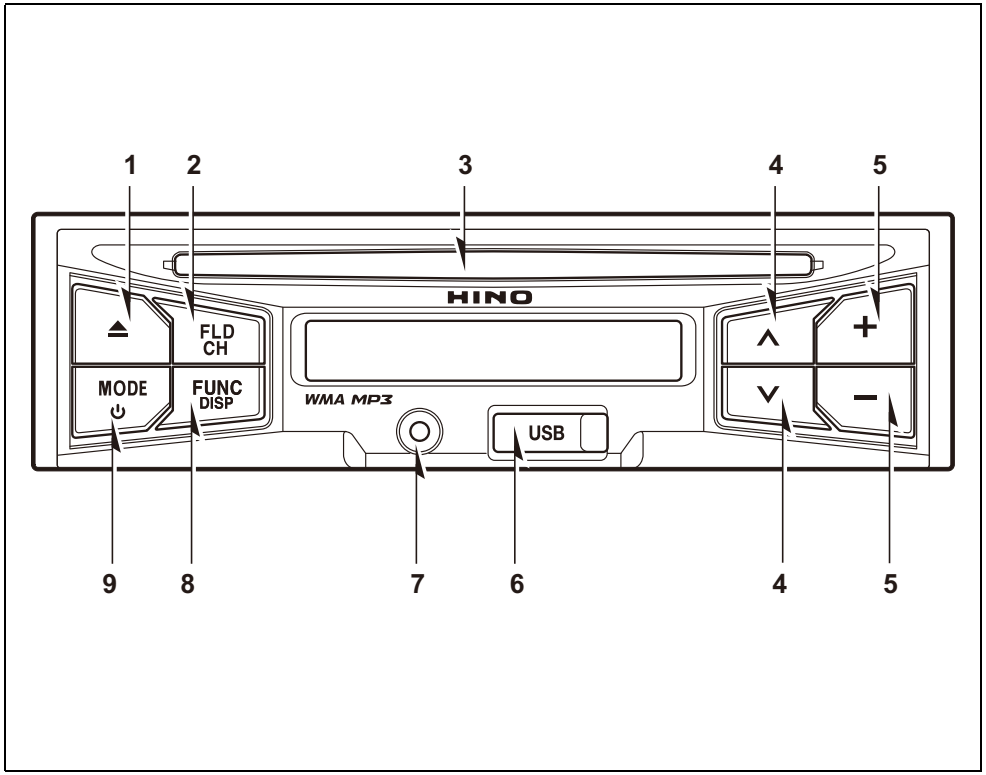


1. Eject button
2. FLD/CH button
3. CD slot
4. TUNE/TRACK button
5. Volume control button
6. USB terminal
7. Mini jack
8. FUNC/DISP button
9. MODE/Power button

**Turning the power on**

Press the "**MODE/Power**" button to turn the power on. Press and hold it for 1 second or more to turn the power off.

**Volume adjustment**

Press the "**Volume control**" button to adjust the volume.

**+** : Volume will increase 1 step every time the button is pressed.Volume will continuously increase when the button is pressed continuously.

**-** : Volume will decrease 1 step every time the button is pressed. Volume will continuously decrease when the button is pressed continuously.

It can be adjusted between 63 (maximum) and 19 (default) and 0.

***NOTICE:***

*Turning the power on or off with the volume set to maximum will damage the equipment and your hearing. Set the volume to a moderate level.*

**FUNCTION SETTING MODE**

Adjustment of bass, treble, fader, and balance, and setting of clock display and time can be performed.

**Adjustment of bass level**

1. Press the "**FUNC**" button to display "**BAS**".
2. Press the "**TUNE/TRACK**" button ("∧∨") while "**BAS**" is displayed to adjust the bass level.

   ∧: Level will increase every time the button is pressed.

   ∨: Level will decrease every time the button is pressed.
   It can be adjusted in the range of -5 ↔-4↔-3↔-2↔-1↔0↔1↔2↔3↔4↔5.
   Default setting is 0.

**Adjusting treble**

1. Press the "**FUNC**" button to display "**TRE**".
2. Press the "**TUNE/TRACK**" button ("∧∨") while "**TRE**" is displayed to adjust the treble level.

   ∧: Level will increase every time the button is pressed.

   ∨: Level will decrease every time the button is pressed.
   It can be adjusted in the range of -5 ↔-4↔-3↔-2↔-1↔0↔1↔2↔3↔4↔5.
   Default setting is 0.

**Adjusting fader**

1. Press the "**FUNC**" button to display "**FAD**".
2. Press the "**TUNE/TRACK**" button ("∧∨") while "**FAD**" is displayed to adjust the front and rear speaker volume.

   ∧: Front speaker volume will increase every time the button is pressed.

   ∨: Rear speaker volume will increase every time the button is pressed.

   It can be adjusted in the range of R7↔R6↔R5↔R4↔R3↔R2↔R1↔0↔F1↔F2↔F3↔F4↔F5↔F6↔F7.

   Default setting is 0.

**HINT:**

**Adjustment of rear speaker volume is not possible if there are no rear speakers installed.**

**Adjusting balance**

1. Press the "**FUNC**" button to display "**BAL**".
2. Press the "**TUNE/TRACK**" button ("∧∨") while "**BAL**" is displayed to adjust the balance of volume from the left and right speakers.

   ∧: Right speaker volume will increase every time the button is pressed.

   ∨: Left speaker volume will increase every time the button is pressed.

   It can be adjusted in the range of L7↔L6↔L5↔L4↔L3↔L2↔L1↔0↔R1↔R2↔R3↔R4↔R5↔R6↔R7.

   Default setting is 0.

**Switching the time display**

1. Press the "**FUNC**" button to display "**CLK**".
2. Press the "**TUNE/TRACK**" button ("∧∨") while "**CLK**" is displayed and select "**ON**"/"**OFF**".
   "**ON**": Clock is displayed.
   "**OFF**": Clock is not displayed.

**HINT:**

- **When the clock display is "ON", it is displayed prioritized over the audio display (radio frequency, song number, or elapsed time).**
- **When the power source is interrupted by battery disconnection, the time of the clock will be reset.**

**Setting the hour**

1. Press the "**FUNC**" button to display "**CLK**" and make the clock display (hours) blink.
2. Press the "**TUNE/TRACK**" button ("∧∨") while the clock display (hours) is blinking to adjust the time (hours).

   ∧: Time (hours) will increase every time the button is pressed.

   ∨: Time (hours) will decrease every time the button is pressed.

**Setting the Minutes**

1. Press the "**FUNC**" button to display "**CLK**" and make the clock display (minutes) blink.
2. Press the "**TUNE/TRACK**" button ("∧∨") while the clock display (minutes) is blinking to adjust the time (minutes).

   ∧: Time (minutes) will increase every time the button is pressed.

   ∨: Time (minutes) will decrease every time the button is pressed.

**TUNER MODE OPERATIONS**

**Tuning**

1. Press the "**MODE**" button when the power is on to select either AM radio or FM radio.
   It is switched to AM radio when "**AM**" is displayed, and FM radio when "**FM**" is displayed.
2. Press the "**TUNE**" button ("∧∨") for less than 2 seconds to select a radio station manually. The display should be checked in order to adjust the frequency because AM radio frequency will range from 10 kHz or FM radio frequency will range from 0.2 MHz.

   Press the "**TUNE**" button ("∧∨") for 2 seconds or longer to select a radio station automatically. The automatic tuning will stop after detecting a receivable station. Press the "**TUNE**" button ("∧∨") again to cancel this function.

**HINT:**

- **When the displayed frequency reaches the highest frequency, it will return to the lowest frequency. When the lowest frequency has been reached, it will return to the highest frequency.**
- **Program your preferred radio stations to the "Preset" buttons in advance to conveniently use them during driving.**

| Reception frequency | |
|---|---|
| AM | 530 - 1710 kHz (10 kHz step) |
| FM | 87.7 - 107.9 MHz (0.2 MHz step) |

**Calling out preset channels**

A maximum of 6 stations can be programmed and called out in the "**Preset**" channels for each of the FM radio and AM radio.

1. Press the "**CH**" button for less than 2 seconds.
2. Press the "**TUNE**" button ("∧∨") and select the station programmed in the preset channels.
   As an example, "**CH1**" is displayed.

**HINT:**

**The radio stations in memory are erased when the power supply is interrupted to replace the battery or fuses.**

**Programming preset channels**

1. Display the channel number you wish to program.
2. Press the "**CH**" button for 2 seconds or longer.
   The frequency display will blink.
3. Press the "**TUNE**" button ("∧∨") to select the frequency you wish to program.
4. Press the "**CH**" button for 2 seconds or longer.
   Once it has been set as a preset channel, the frequency display will stop blinking.

**CD OPERATIONS**

**Playing CDs (When there is no CD inserted)**

Insert a CD into the CD slot with the label side (printed side) facing up. The power will switch on and playback will start automatically.

**Playing CDs (When there is a CD inserted)**

Press the "**MODE**" button when the power is on. "**DISC**" will appear and playback will resume from where it was stopped.

**HINT:**

- **Gently push the CD into the player and it will automatically load.**
- **At the start of the playback of a CD, track (music file) number will be indicated on the display.**

**Switching the displayed items on the display**

Every time the "**DISP**" button is pressed for 1 second or more, the track (file) number and elapsed time is switched.

***NOTICE:***

*Check that there is no CD in the player before inserting a CD. Forcibly inserting a CD could damage the CD or cause the player to malfunction.*

**Fast forwarding/Fast reversing**

Press and hold the "**TRACK**" button ("▲▼") during playback to fast forward or fast reverse the music.
Fast forward or fast reverse will stop and the music will playback when the "**TRACK**" button ("▲▼") is released.
▲: Fast forward
▼: Fast reverse

**Replaying the same track**

Press the "**TRACK**" button ("▼") for less than 1 second to start playback of the current track from the beginning.

**Track selection**

Press the "**TRACK**" button ("▲▼") for less than 1 second to select the desired track number.
▲: Advance to the next track.
▼(press twice or more): Return to a previous track.

**Selecting a song in a folder**

For CD (MP3/WMA):

1. Press the "**FLD**" button for less than 1 second.
   Folder number is displayed.
   As an example, "**F100**" for folder number 100.
2. Press the "**TRACK**" button ("▲▼") to select a folder number.
   ▲: Increase folder number
   ▼: Decrease folder number

**Repeat playback**

1. Press the "**FUNC**" button for less than 1 second to display "**RPT**".

For CD:

2. Every time the "**TRACK**" button ("∧∨") is pressed, it will switch between "**OFF**" and "**ON**".
"**OFF**": Repeat playback is off.
"**ON**": Music being played back will be repeatedly played back.

For CD (MP3/WMA):

2. Playback method can be selected between "**RPT OFF**", "**RPT ON**", and "**FLD RPT ON**" every time the "**TRACK**" button ("∧∨") is pressed.
"**RPT OFF**": Repeat playback is off.
"**RPT ON**": File being played back will be repeatedly played back.
"**FLD RPT ON**": Files in the folder being played back will be repeatedly played back.

**Random playback**

1. Press the "**FUNC**" button for less than 1 second during playback to display "**RDM**".

For CD:

2. Press the "**TRACK**" button ("∧∨") to switch between "**OFF**" and "**ON**".
"**OFF**": Random playback is off.
"**ON**": Music will be played back in random.

For CD (MP3/WMA):

2. Playback method can be selected between "**RDM OFF**", "**RDM ON**", and "**FLD RDM ON**" every time the "**TRACK**" button ("∧∨") is pressed.
"**RDM OFF**": Random playback is off.
"**RDM ON**": Files in the disc are randomly played back.
"**FLD RDM ON**": The files inside the folder are randomly played back.

**Root directory**

For CD (MP3/WMA):

When the "**FLD**" button is pressed for 1 second or more, the first folder in the disc is selected to start playback.

**Ejecting the CD**

Press the "⏏" button to stop playback and eject the CD.

**Stopping CD playback**

To stop the playback of a CD

- Eject the CD.
- Switch to another audio mode.
- Turn off the power.

**If an error appears in the display**

If a problem occurs with the CD during playback, an error appears in the display.

| Message | Description |
|---|---|
| E: 1 | This message appears when the disc is stained or damaged.<br>Check if the inserted disc is stained or upside-down.<br>When the disc is dirty, clean the disc. The upside-down disc must be taken out and inserted correctly. Do not use a scratched or bent disc. |
| E: 2 | This message appears when the player cannot be operated because of some problems.<br>The disc must be ejected from the player. |
| E: 6 | This message appears when there is no playable music data recorded on the CD-R/RW disc or it is recorded in a format that is not playable.<br>Insert a CD-R/RW disc that contains playable music data. |

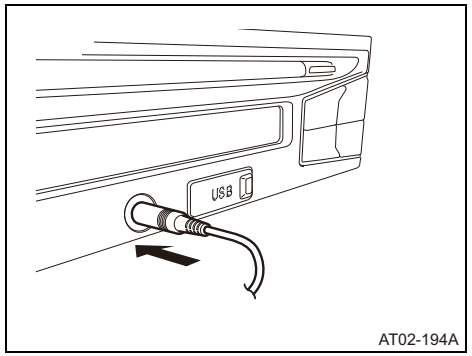

AT02-194A

**AUX OPERATIONS**

**Connecting your portable audio device to play music**

1. Connect your portable audio device to mini jack.

**⚠ WARNING**

**Either place the portable audio device and mini plug cable somewhere where they will not interfere with driving or temporarily secure them at a location where they are not in the way. They could impede driving and cause a traffic accident.**

**⚠ CAUTION**

- **Take care that the terminals of the mini plug cable do not catch your hands.**
- **Do not connect, operate or remove the portable audio device while driving.**

**HINT:**

- **Operating portable audio devices connected to the audio system—** The volume can be adjusted using the vehicle's audio controls. All other adjustments must be made on the portable audio device itself.
- **When using a portable audio device connected to the power outlet—** Noise may occur during playback. Use the power source of the portable audio device.
- **AUX device cannot be controlled from audio player.**
- **AUX volume is reduced to prevent speaker damage.**

**Switching from other audio mode to the AUX mode**

When a portable audio device is connected to playback music, press the "**MODE**" button and display "**AUX**" to listen to the audio played back from the device.

**Adjusting AUX volume**

Press the "**Volume control**" button to adjust the volume.

**+** : Volume will increase 1 step every time the button is pressed. Volume will continuously increase when the button is pressed continuously.

**-** : Volume will decrease 1 step every time the button is pressed. Volume will continuously decrease when the button is pressed continuously.

It can be adjusted between 63 (maximum) and 19 (default) and 0.

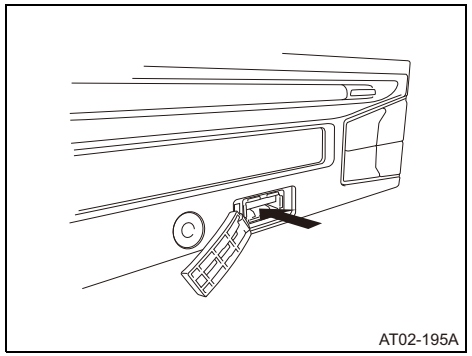
AT02-195A

**USB DEVICE OPERATIONS**

**Playing music downloaded in USB device**

Insert the adapter to the USB terminal and connect the USB device that stores music data. After the music data is recognized, the playback will start.

**Selecting the USB mode**

Pressing the "**MODE**" button and displaying "**USB**" when the USB device is connected allows you to switch from another audio mode to the USB mode.

**⚠ CAUTION**

**Do not connect, operate or remove the USB device while driving.**

***NOTICE:***

- *When removing the USB device, turn off ("**LOCK**" position) the starter switch or select the other mode (e.g. FM or AM mode).*
- *This audio system does not support iPod® and iPhone®.*
  *The USB terminal can only recharge iPod and iPhone.*

  *iPhone, iPod, iPod classic, iPod nano, and iPod touch are trademarks of Apple Inc., registered in the U.S. and other countries.*

***NOTICE:***

***To prevent damage to a USB device —***

- *Do not leave a USB device in the vehicle. The temperature inside may become high, resulting in damage to the player.*
- *Do not push down on or apply unnecessary pressure to the USB device while it is connected as this may damage the USB device or its terminal.*
- *Do not insert foreign objects into the port as this may damage the USB device or its terminal.*

**HINT:**

- **When playback of the music file is started, the file number in the folder being played back is shown on the display.**
- **When switching to other mode from the USB mode, then returning to the USB mode, it allows you to return to the music file that was played last.**

**Fast forwarding/Fast reversing**

Press and hold the "**TRACK**" button ("▲▼") during playback to advance the file forward or backward quickly.
Fast forward or fast reverse is stopped and the file is played back when the "**TRACK**" button ("▲▼") is released.
▲: Fast forward
▼: Fast reverse

**Replaying the same file**

Press the "**TRACK**" button ("▼") for less than 1 second to start playback of the current file from the beginning.

**File selection**

Press the "**TRACK**" button ("▲▼") for less than 1 second to select the desired file number.
▲: Advance to the next file.
▼(press twice or more): Return to a previous file.

**Selecting a track inside a folder**

1. Press the "**FLD**" button for less than 1 second.
   Folder number is displayed.
   As an example, "**F100**" for folder number 100.
2. Press the "**TRACK**" button ("▲▼") to select the folder number.
   ▲: Increase folder number
   ▼: Decrease folder number

**Repeat playback**

1. Press the “**FUNC**” button for less than 1 second to display “**RPT**”.
2. Playback method can be selected between “**RPT OFF**”, “**RPT ON**”, and “**FLD RPT ON**” every time the “**TRACK**” button (“∧∨”) is pressed.
   “**RPT OFF**”: Repeat playback is off.
   “**RPT ON**”: File being played back will be repeatedly played back.
   “**FLD RPT ON**”: Files in the folder being played back will be repeatedly played back.

**Random playback**

1. Press the “**FUNC**” button for less than 1 second to display “**RDM**”.
2. Playback method can be selected between “**RDM OFF**”, “**RDM ON**”, and “**FLD RDM ON**” every time the “**TRACK**” button (“∧∨”) is pressed.
   “**RDM OFF**”: Random playback is off.
   “**RDM ON**”: Files in the USB device are randomly played back.
   “**FLD RDM ON**”: The files stored inside the folder being played back are randomly played back.

**Root directory**

When the “**FLD**” button is pressed for 1 second or more, the first folder in the USB device is selected to start playback.

**Switching the displayed items on the display**

Every time the “**DISP**” button is pressed for 1 second or more, the file number and elapsed time is switched.

**If an error appears in the display**

If a problem occurs with the USB device during playback, an error appears in the display.

| Message | Description |
|---|---|
| E: 1 | An unsupported USB device is connected.<br>Connect a supported USB device. |
| E: 2 | This message appears when operation of some problem is not possible due to the player.<br>Remove the connected USB device. |
| E: 3 | This message appears when the temperature inside the player is too high or another extreme condition is detected.<br>Wait a while before trying to operate the player again. |
| E: 4 | This message appears when failed playback or difficulty in transmission is detected.<br>Reconnect the USB device. |
| E: 5 | This message appears when there is no file recorded or no playable music file on the USB device.<br>Connect a USB device that contains playable music data. |
| E: 7 | This message appears when there is a music file that is not in a playable format recorded on the USB device.<br>Connect a USB device that contains playable music data. |

## USING THE AUDIO SYSTEM

### CERTIFICATION

This device complies with part 15 of the FCC Rules. Operation is subject to the following two conditions: (1) This device may not cause harmful interference, and (2) this device must accept any interference received, including interference that may cause undesired operation.

### FCC WARNING

Changes or modifications not expressly approved by the party responsible for compliance could void the user's authority to operate the equipment.

### RADIO

Usually, a problem with radio reception does not mean there is a problem with your radio - it is just the normal result of conditions outside the vehicle.

For example, nearby buildings and terrain can interfere with FM reception. Power lines or telephone wires can interfere with AM signals.

And of course, radio signals have a limited range. The farther you are from a station, the weaker its signal will be. In addition, reception conditions change constantly as your vehicle moves.

Here are some common reception problems that probably do not indicate a problem with your radio.

### FM TRANSMISSIONS

Fading and drifting stations - Generally, the effective range of FM is about 25 miles (40 km). Once outside this range, you may notice fading and drifting, which increase with the distance from the radio transmitter. They are often accompanied by distortion.

Multi-path - FM signals are reflective, making it possible for two signals to reach your antenna at the same time. If this happens, the signals will cancel each other out, causing a momentary flutter or loss of reception.

Static and fluttering - These occur when signals are blocked by buildings, trees, or other large objects. Increasing the bass level may reduce static and fluttering.

Station swapping - If the FM signal you are listening to is interrupted or weakened, and there is another strong station nearby on the FM band, your radio may tune in the second station until the original signal can be picked up again.

### DISC

When it is cold or when it is raining, the car windows will fog up and cause dew (water drops) to form in the vehicle compartment (condensation). When this happens, the sound will jump, and playback will stop. Ventilate the vehicle compartment and dehumidify before resuming use.

Sounds may jump due to violent vibrations when the car is traveling across harsh roads.

**⚠ CAUTION**

**Compact disc players use an invisible laser beam inside the disc player which could be harmful to the human body when exposed outside due to improper use of the player. Be sure to operate the player correctly.**

***NOTICE:***

- *Never insert foreign objects into the disc insertion slot.*
- *Do not insert a wet disc into the player.*

### USABLE DISCS

Music CDs with the following marks can be used. CD-R and CD-RW discs recorded according to the CD-DA format can also be played.

CD-R (CD-Recordable), CD-RW (CD-ReWritable) may not be able to playback due to the recording condition, characteristics of the disc, damage, dirt or deterioration due to long exposure to the environment of the vehicle compartment.

CD-R, CD-RW that are not finalized and CD-R and CD-RW that are saved in the UDF format cannot be played (excluding MP3/WMA).

CD-TEXT function is only compatible with commercial CD compatible with CD-TEXT.

Characters may not display accurately in CD-R and CD-RW.

CD, see-through Disc with transparent or translucent recorded parts may not be inserted and ejected accurately. Please do not use them.

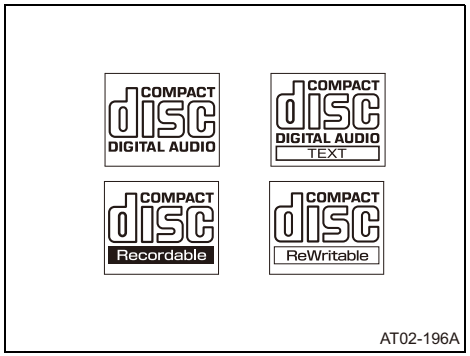


AT02-196A

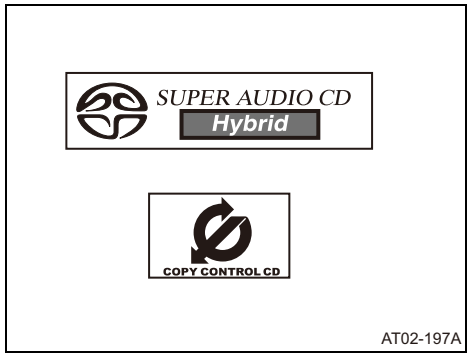


SACD (Super Audio CD) can only be played in the CD level of a hybrid disc.
CCCD (Copy Control CD) may not play as it does not meet the standard CD requirements.
CD-EXTRA can be played as a music CD. The sound of a data track of a Mixed Mode CD cannot be played. Only music tracks can be played. A Mixed Mode CD mixed with DTS can also not be played accurately.

**When removing a disc**

Remove the disc horizontally from the main device. Do not pull it violently towards the top.
Also do not pull it down hard while removing.
The disc may become damaged and the sound may jump.

, circle with slash on pages 2-137 to 2-139 means “Do not” use special shaped, low quality or labeled discs such as those shown in the illustrations.

**Handing a disc**

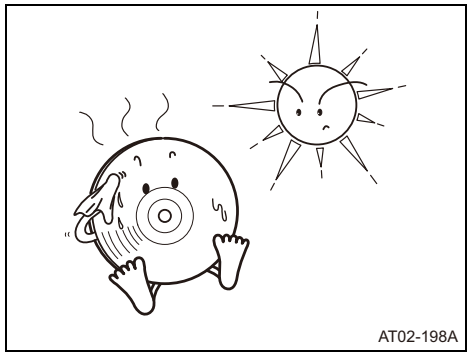


Avoid exposing the disc to direct sunlight and always keep it in a case. Otherwise, the disc will bend and become unusable.

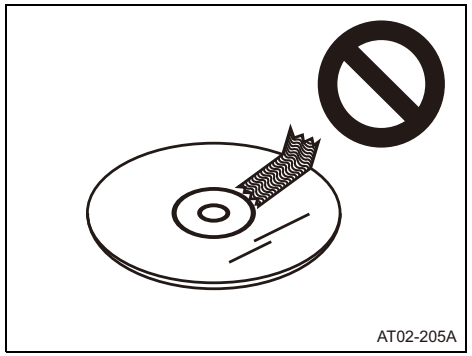


Do not stick any paper tape to the recording side or the label side as it may lead the disc to malfunction.

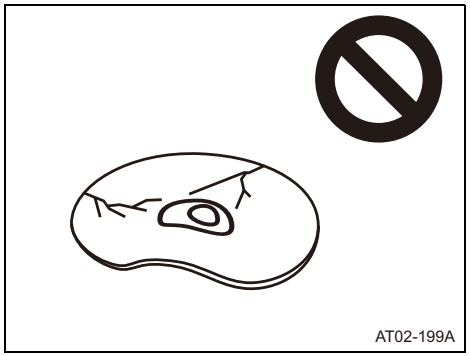


Do not use a disc with cracks or if it is severely bent as it may lead to damage.

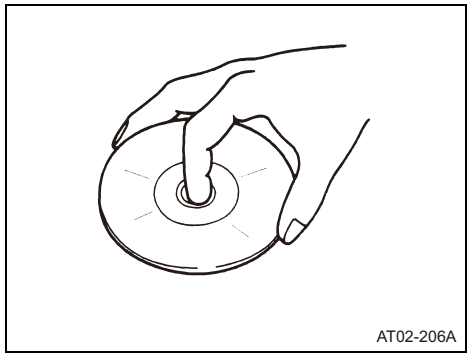
AT02-206A

Hold the disc without touching the recording side as this may make the disc dirty and lead to the sound jumping.

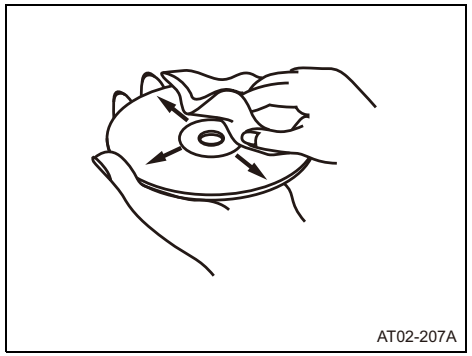
AT02-207A

Using a dirty disc will damage the disc and lead to sound jumping. When the disc is dirty, use a commercial disc cleaner to gently clean it from the inside to the outside.

**New disc**

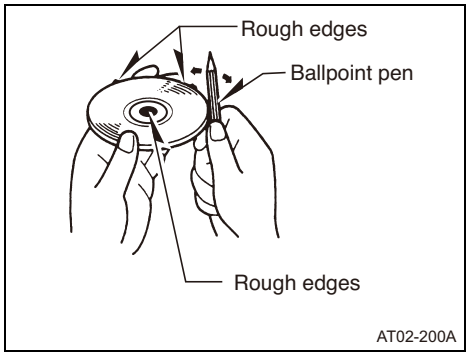

AT02-200A

Some new discs may have burrs found in the center hole or at the edges. Remove these burrs with a ballpoint pen, etc. before using the disc.
If they are not removed, the disc may not be read accurately and cause improper operation.

**Rental disc**

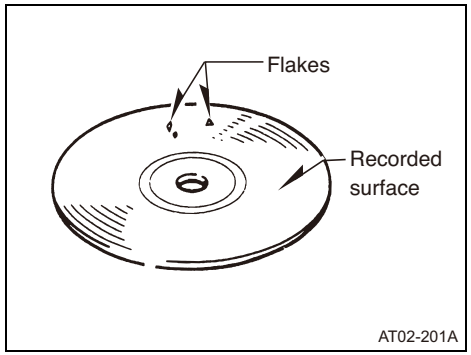


Do not use any disc that has cellophane tape or any rental disc that has glue from the label exposed or if some of the removed label is still attached to it. Using the disc like this may cause the disc to not eject properly and damage the disc.

**Discs with special shapes**

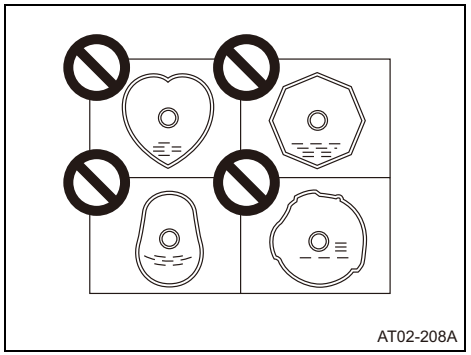


Heart-shaped or octagon-shaped discs cannot be played. Do not use them as they may cause damage.

**Disc accessories**

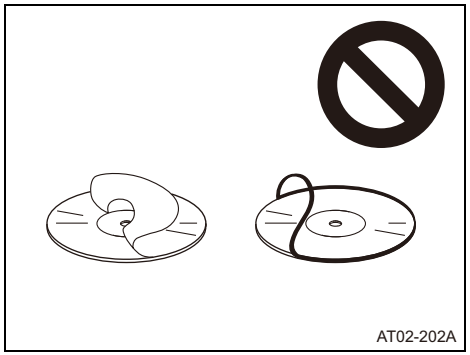

Do not use commercially available accessories (such as stabilizers, protective seals, etc.) that are said to improve sound quality or protect the discs, and CD labels, etc. They may change the thickness of the disc and external specifications and lead to damage.
Do not use commercially available accessories (such as CD rings, protectors) that are said to improve sound quality or are effective against vibrations. They may come off inside the device, causing the disc to become unplayable or unretrievable and lead to malfunction.

**MP3/WMA FILES**

MP3 (MPEG Audio LAYER 3) is a standard format for sound compression technology.
MP3 can compress a file to one-tenth of its original size.
WMA (Windows Media™ Audio) is a Microsoft sound compression format. It can compress sounds to a smaller size than the MP3.
MP3/WMA files recorded in the CD-ROM, CD-R, and CD-RW can be played.
Discs formatted in the ISO9660 level 1 and 2, Romeo and Joliet file system can be used.
Files with extensions compatible to MP3 and WMA can be played (.mp3, .wma).
CD-R and CD-RW compatible to multisessions and also have MP3/WMA files can be played.
Compatible with ID3 tag ver.1.0, ver.1.1, ver.2.2 and ver.2.3.
Compatible to WMA tag.

The sampling frequency corresponds as follows.
MP3 file:

- MPEG1 LAYER3 - 32/44.1/48(kHz)
- MPEG2 LAYER3 - 16/22.05/24(kHz)
- MPEG2.5 LAYER3 - 8/11.025/12(kHz)

WMA file:32/44.1/48 (kHz)

**Bit rate playable**

MP3 file:

- MPEG1 LAYER3 - 32/40/48/56/64/80/96/112/128/160/192/224/256/320 kbps
- MPEG2/2.5 LAYER3 - 16/24/32/40/48/56/64/80/96/112/128/160 kbps

WMA file:

- Ver.7,8,9 - 48/64/80/96/128/160/192 kbps

WMA files are only compatible with 2ch playback.
MP3 files are compatible to the respective modes of stereo, joint stereo, dual channel, monaural.
MP3 files are compatible to VBR (variable bit rate).
Not compatible to M3u playlists.
When the FAST UP/DOWN functions on the MP3 file recorded on the VBR are operated, the playback time may not synchronize.
MP3/WMA files are compatible with up to 8 levels of folders. However, when there are many levels, it may take some time before the first file is played. Therefore, a two-level folder is recommended.

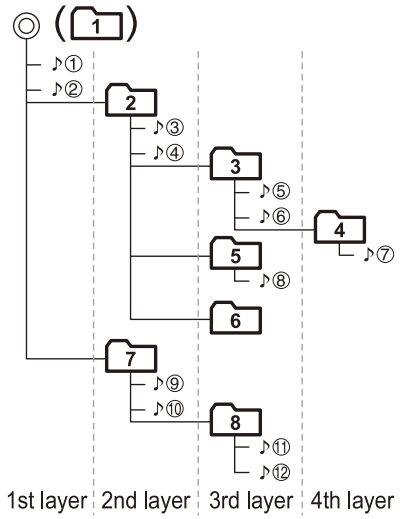


◎ ROOT

Folder

♪ MP3/WMA file

Supplement

6 Since there is no tune contained in the folder 6, the folder is not displayed. It is assigned with a folder number.

Play back in the following order.

①→②→③→④→⑤→⑥→⑦→⑧→⑨→⑩→⑪→⑫

## USB DEVICES

### USB memory standards

Supported file formats:

FAT 12/16/32

- Supported audio formats: MP3/WMA
- Maximum current: 1 A
- Compatibility: USB1.1/2.0 (maximum transfer speed is same as USB 1.1)
- Mass memory support: Supports USB mass storage class.
- Does not support USB hubs or multi card readers.
- Does not support iPod and iPhone. (The USB terminal can only recharge iPod and iPhone.)

### Supported MP3/WMA file standards

Discs formatted in the FAT 12/16/32 file system can be used.
Files with extensions compatible to MP3 and WMA can be played (.mp3, .wma).
Compatible with ID3 tag ver.1.0, ver.1.1, ver.2.2 and ver.2.3.
Compatible to WMA tag.
The sampling frequency corresponds as follows.
MP3 file:

- MPEG1 LAYER3 - 32/44.1/48(kHz)
- MPEG2 LAYER3 - 16/22.05/24(kHz)
- MPEG2.5 LAYER3 - 8/11.025/12(kHz)

WMA file:32/ 44.1/48 (kHz)

MP3 file:

- MPEG1 LAYER3 - 32/40/48/56/64/80/96/112/128/160/192/224/256/320 (kbps)
- MPEG2/2.5 LAYER3 - 16/24/32/40/48/56/64/80/96/112/128/160 (kbps)

H1-A038E01.book 144 ページ ２０１６年１０月１９日 水曜日 午後５時２６分

WMA file:

- Ver.7,8,9 - 48/64/80/96/128/160/192 kbps

WMA files are only compatible with 2ch playback.
MP3 files are compatible to the respective modes of stereo, joint stereo, dual channel, monaural.
MP3 files are compatible to VBR (variable bit rate).
Not compatible to M3u playlists.
When the FAST UP/DOWN functions on the MP3 file recorded on the VBR are operated, the playback time may not synchronize.
MP3/WMA files are compatible with up to 8 levels of folders. However, when there are many levels, it may take some time before the first file is played. Therefore, a two-level folder is recommended.
A maximum of 700 folders and 3000 files can be played in a single memory device.

## —Radio and CD/USB player with Bluetooth®

### PRECAUTIONS

**⚠ WARNING**

- **Operate the player only while the vehicle is stationary. Operating them while the vehicle is moving could cause an accident.**
- **Adjust the volume so that sound outside of the vehicle can be heard. If outside sound cannot be heard, accidents may be harder to avoid.**
- **Do not install a radio equipment antenna near the vehicle's radio antenna. This could cause unwanted noise on the radio or while playing a CD.**

***NOTICE:***

*Do not allow water to come into contact with the player. It may cause damage to the player.*

**CONTROL PANEL**

The CD player can be used when the starter switch is in the “**ACC**” or “**ON**” position.

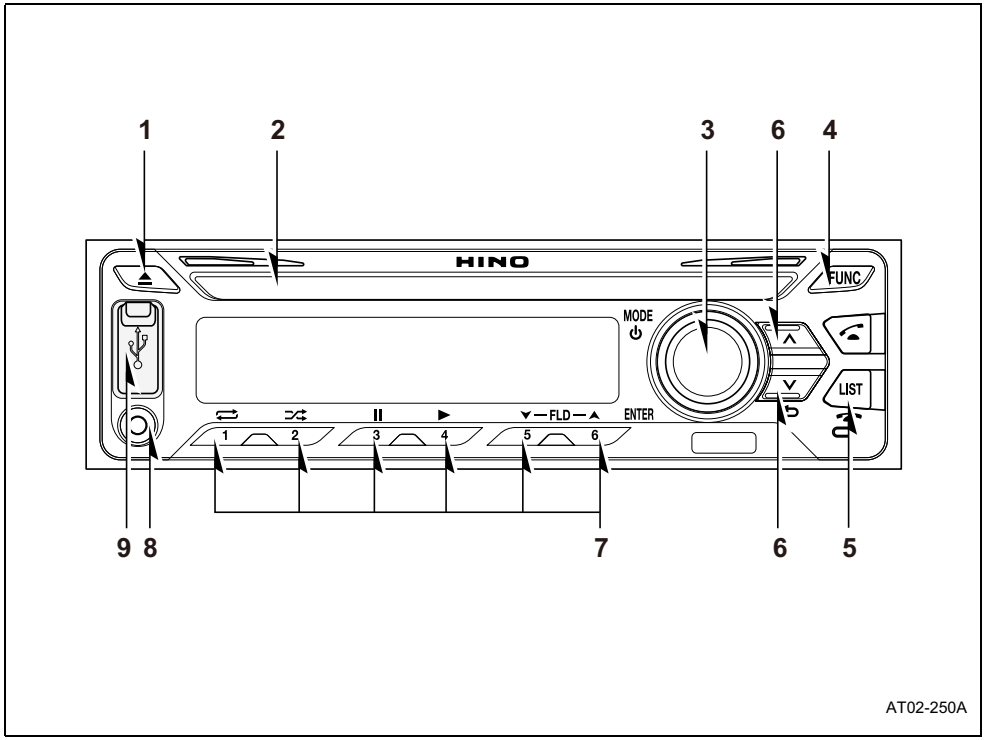


1. Eject button
2. Disc slot
3. MODE switch
   POWER/ENTER button
   Volume adjust knob
4. FUNC button
5. LIST button
6. Tune/Track button
   Back button
7. Preset button
8. Mini jack
9. USB terminal

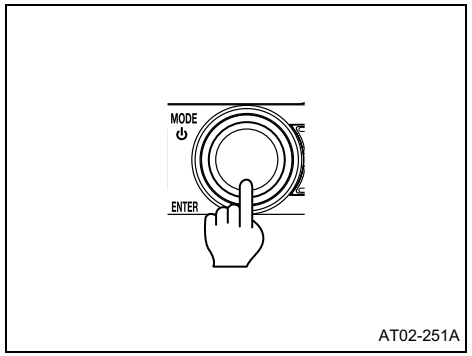

AT02-251A

**Turning the power on**

Press the “**POWER**” button to turn the power on. Press and hold it for 1 second or more to turn the power off.

***NOTICE:***

*If the “**POWER**” button is pressed while listening to music in audio mode, the power is turned off. When you press the “**POWER**” button again, the audio system resume the last mode just before it was turned off.*

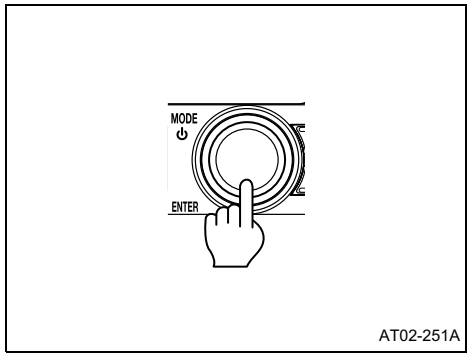

AT02-251A

**Switching the audio modes**

1. Press the “**MODE**” switch.

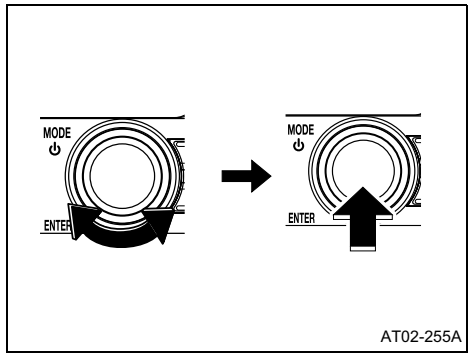

AT02-255A

2. Turn the “**MODE**” switch to select the audio mode of your choice, and then press the “**ENTER**” button. The audio mode changes in the following order:
FM1 ↔ FM2 ↔ FM3 ↔ DISC*1 *2 ↔ USB/iPOD(iPod)*3 ↔ BT-AUDIO ↔ AUX*4 ↔ AM1 ↔ AM2 ↔ FM1...

*1: This mode is skipped when a disc is not inserted.

*2: The content to be displayed varies depending on the data stored in the disc. (CD/MP3/WMA)

*3: These modes are skipped when the USB/iPod is not connected. "**USB**" is not displayed while an iPod is connected. "**iPod**" is not displayed when "**USB**" is connected.

*4: This mode is skipped when an auxiliary player is not connected.

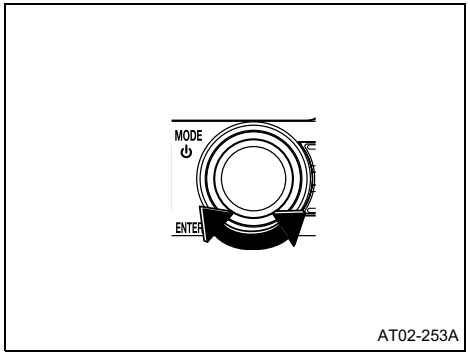

AT02-253A

**Adjusting the volume**

Turn the "**Volume adjust**" knob clockwise or counterclockwise to adjust the volume.

Turn clockwise: Increase the volume.

Turn counterclockwise: Decrease the volume.

***NOTICE:***

- *The "**Volume adjust**" knob keeps on turning until you stop. However, the volume itself is limited, and even if you keep on turning the "**Volume adjust**" knob clockwise or counterclockwise, the volume is kept to a certain degree.*
- *Turning the power on or off with the volume set to maximum will damage the equipment and your hearing. Set the volume to a moderate level.*

**FUNCTION SETTING MODE**

Various sound adjust modes may be fine tuned by following the procedures below.

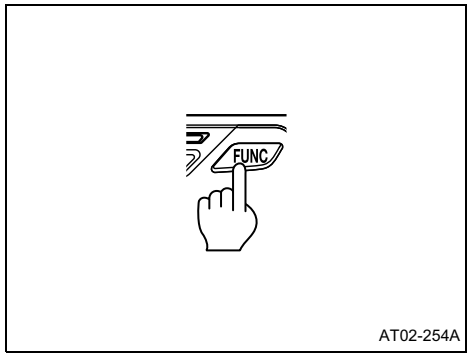

AT02-254A

**Adjusting bass**

1. Press the “**FUNC**” button.

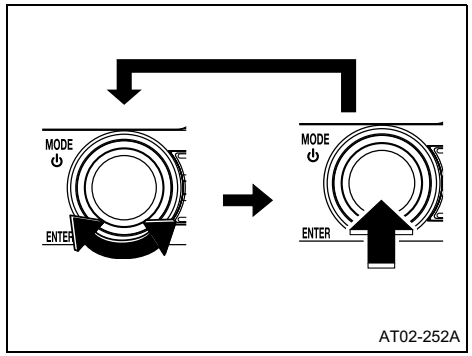

AT02-252A

2. Turn the “**MODE**” switch to select “**SOUND**”, and then press the “**ENTER**” button.
3. Turn the “**MODE**” switch to select “**BASS**”, and then press the “**ENTER**” button.
4. Turn the “**MODE**” switch clockwise or counterclockwise to adjust the level, and then press the “**ENTER**” button.
   Turn clockwise:
   Emphasizes low frequency sounds.
   Turn counterclockwise:
   Softens low frequency sounds.

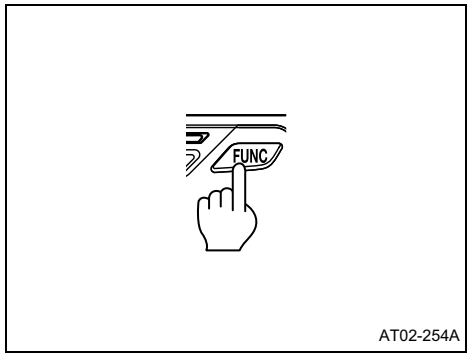

AT02-254A

**Adjusting treble**

1. Press the “**FUNC**” button.

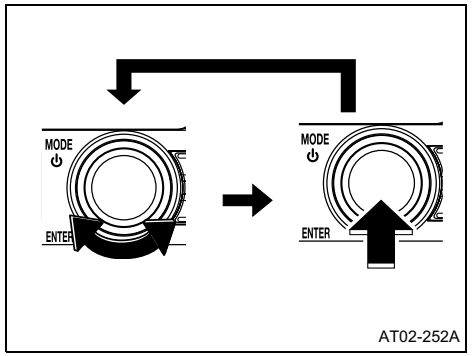

AT02-252A

2. Turn the “**MODE**” switch to select “**SOUND**”, and then press the “**ENTER**” button.
3. Turn the “**MODE**” switch to select “**TREBLE**”, and then press the “**ENTER**” button.
4. Turn the “**MODE**” switch clockwise or counterclockwise to adjust the level, and then press the “**ENTER**” button.
   Turn clockwise: Emphasizes high frequency sounds.
   Turn counterclockwise: Softens high frequency sounds.

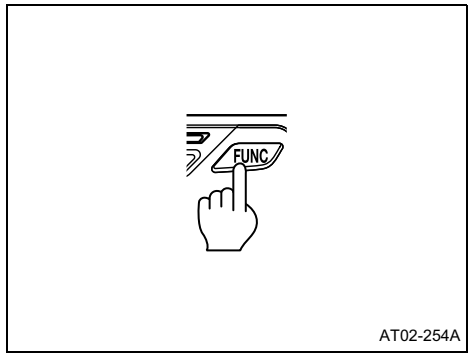

AT02-254A

**Adjusting fader**

1. Press the “**FUNC**” button.

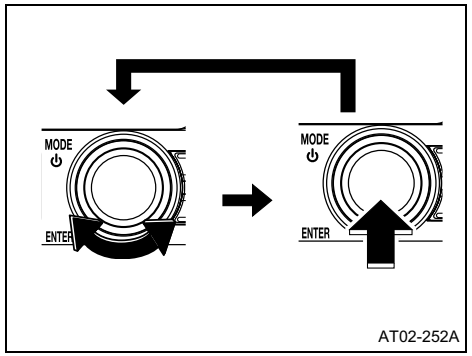

AT02-252A

2. Turn the “**MODE**” switch to select “**SOUND**”, and then press the “**ENTER**” button.
3. Turn the “**MODE**” switch to select “**FADER**”, and then press the “**ENTER**” button.
4. Turn the “**MODE**” switch clockwise or counterclockwise to adjust the level, and then press the “**ENTER**” button.
   Turn clockwise: Emphasizes front speakers.
   Turn counterclockwise: Emphasizes rear speakers.

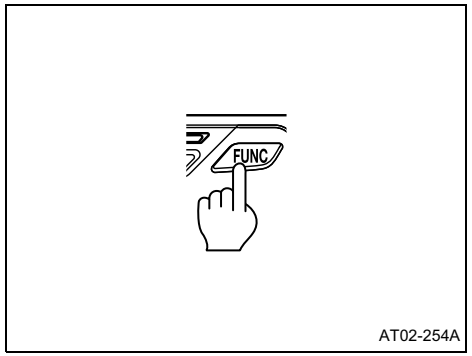

AT02-254A

**Adjusting balance**

1. Press the “**FUNC**” button.

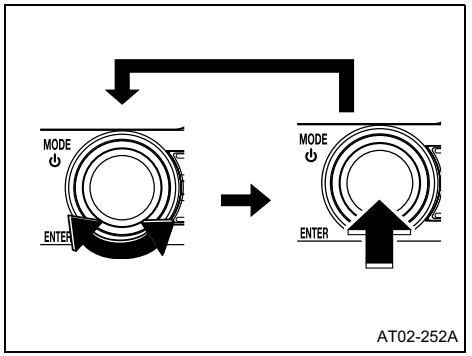

AT02-252A

2. Turn the “**MODE**” switch to select “**SOUND**”, and then press the “**ENTER**” button.
3. Turn the “**MODE**” switch to select “**BALANCE**”, and then press the “**ENTER**” button.
4. Turn the “**MODE**” switch clockwise or counterclockwise to adjust the level, and then press the “**ENTER**” button.
   Turn clockwise:
   Emphasizes right speakers.
   Turn counterclockwise:
   Emphasizes left speakers.

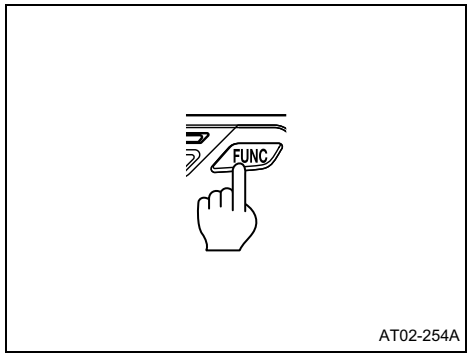

AT02-254A

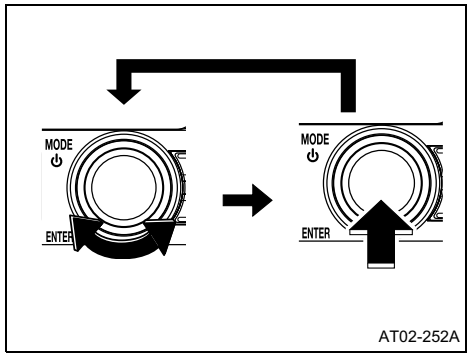

AT02-252A

**Switching the clock modes**

1. Press the “**FUNC**” button.
2. Turn the “**MODE**” switch to select “**CLOCK**”, and then press the “**ENTER**” button.
3. Turn the “**MODE**” switch clockwise or counterclockwise to select the clock mode, and then press the “**ENTER**” button.
   OFF (clock display OFF) ↔ ON (clock display ON) ↔ SET (time settings)

***NOTICE:***

*Time is not reset when clock mode is turned off.*

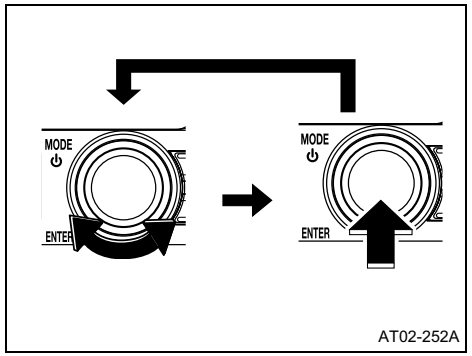

AT02-252A

**Setting the time**

1. Select “**SET**” in the clock mode.
2. Turn the “**MODE**” switch to set the clock time (hour), and then press the “**ENTER**” button.
   Turn clockwise: Move 1 hour forward.
   Turn counterclockwise: Move 1 hour backward.
3. Turn the “**MODE**” switch to set the clock time (minute), and then press the “**ENTER**” button. Turn clockwise: Move 1 minute forward.
   Turn counterclockwise: Move 1 minute backward.

***NOTICE:***

*To return to the clock time (hour) setting mode, press the “**Back**” button while setting the clock time (minute).*

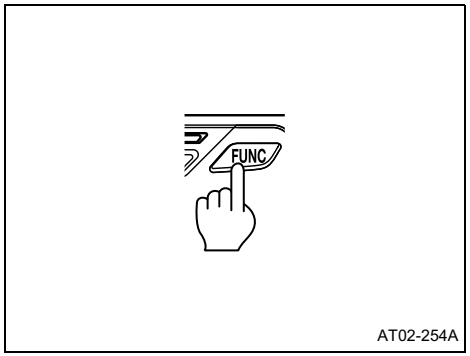

AT02-254A

**Registering a Bluetooth device**

Connecting a Bluetooth device (mobile phone or Bluetooth compatible audio player) to this unit allows you to operate them from the unit and talk in handsfree mode or listen to music. When a Bluetooth connection is established, “ ” appears on the display window.

1. Press the “**FUNC**” button.

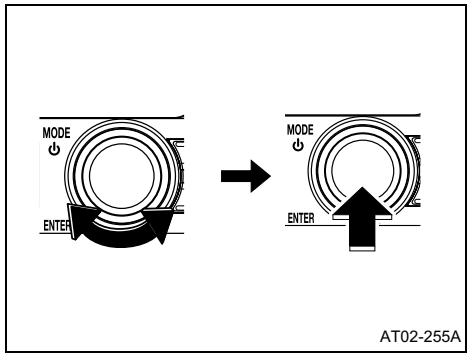

AT02-255A

2. Turn the “**MODE**” switch to select “**BLUETOOTH**”, and then press the “**ENTER**” button.

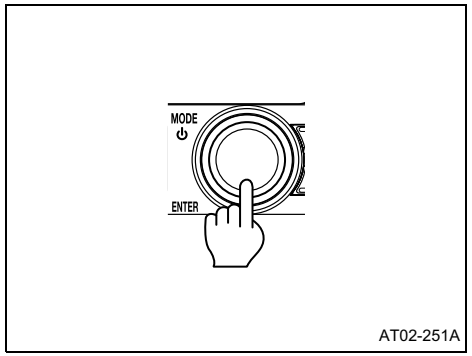

AT02-251A

3. When “PAIRING” appears on the display window, press “**ENTER**” button.
   If the Bluetooth device has already been registered in this unit, turn the “**MODE**” switch to select “**PAIRING**”.

4. After “**CAR AUDIO**”, and then 4-digit passkey appears on the display window, operate the Bluetooth device to enter the passkey.
   See the instruction manual enclosed with your portable device on how to operate it.
   When the registration of the Bluetooth device in this unit is completed, “**CONNECTED**” appears on the display window. If “**FAILED**” appears on the display window after the passkey is entered, try registering again.

**⚠ CAUTION**

**Do not register the Bluetooth device while driving. Park the vehicle in a secure location before carrying out the registration.**

***NOTICE:***

*Up to 5 Bluetooth devices can be registered on the unit. If it exceeds the limit of registrations, "**DEL DEVICE?**" appears on the display window, you must delete the registered Bluetooth device.*

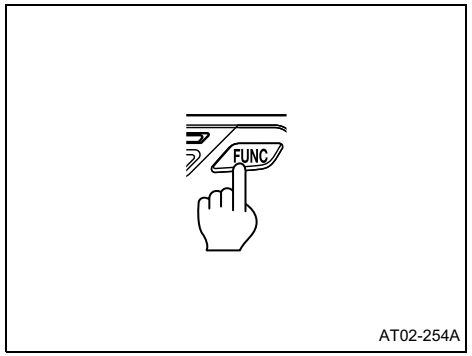

AT02-254A

**Connect to the Bluetooth device automatically**

1. Press the "**FUNC**" button.

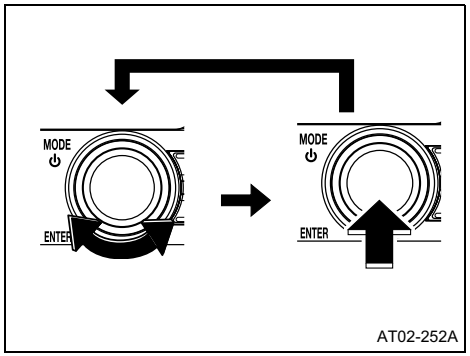

AT02-252A

2. Turn the "**MODE**" switch to select "**BLUETOOTH**", and then press the "**ENTER**" button.
3. Turn the "**MODE**" switch to select "**A.CONNECT**", and then press the "**ENTER**" button.
4. Turn the "**MODE**" switch to switch ON/OFF, and then press the "**ENTER**" button.
   CONNECT ON:
   Turn on the automatic connection.
   CONNECT OFF:
   Turn off the automatic connection.

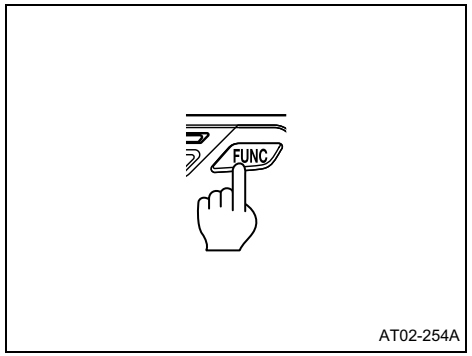

AT02-254A

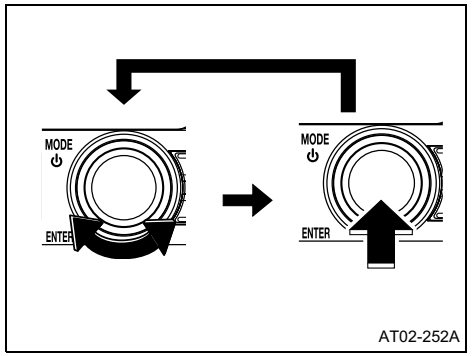

AT02-252A

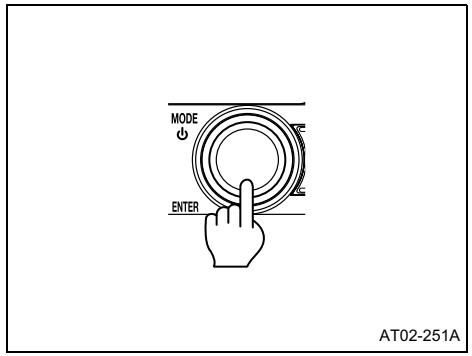

AT02-251A

**Initializing the Bluetooth settings**

You can initialize the Bluetooth settings or histories stored in this unit.

1. Press the “**FUNC**” button.
2. Turn the “**MODE**” switch to select “**BLUETOOTH**”, and then press the “**ENTER**” button.
3. Turn the “**MODE**” switch to select “**RESET DATA**”, and then press the “**ENTER**” button.
4. When “**RESET DATA?**” appears on the display window, press the “**ENTER**” button.
   When the initialization process begins, “**PLEASE WAIT**” appears on the display window.
   When the initialization is completed, “**COMPLETED**” appears on the display window.

**⚠ CAUTION**

**Do not initialize the settings while driving. Park your vehicle in a secure location and then initialize them.**

***NOTICE:***

- *The initialized Bluetooth settings or histories are unrecoverable. Be careful when initializing them.*
- *When you dispose of your vehicle, make sure to delete all personal data that are registered in your audio system. You should delete the following Handsfree/ Bluetooth Audio data from the system:*
  *-Phonebook data*
  *-History of outgoing/incoming/missed calls*
  *-Speed dial data*
  *-Handsfree setting*
  *-Bluetooth phone data*
  *-Portable device data*
  *-Portable device connection setting*

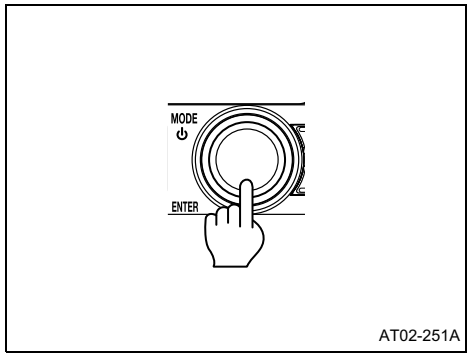

AT02-251A

**TUNER MODE OPERATION**

**Turning on the radio**

1. Press the “**MODE**” switch.

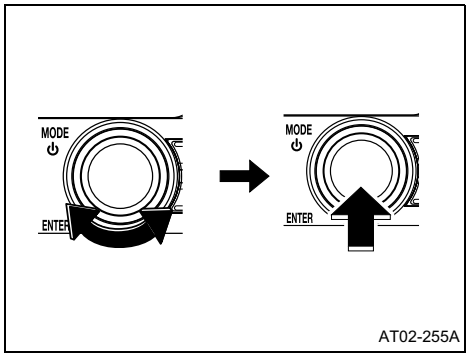

AT02-255A

2. Turn the “**MODE**” switch to select “**FM1**”, “**FM2**”, “**FM3**”, “**AM1**” or “**AM2**”, and then press the “**ENTER**” button.

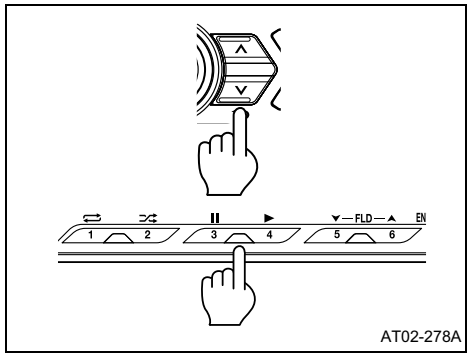

AT02-278A

3. Follow one of the procedures below to tune:
   Press the “**Tune**” button.
   Press the “**Preset**” button.

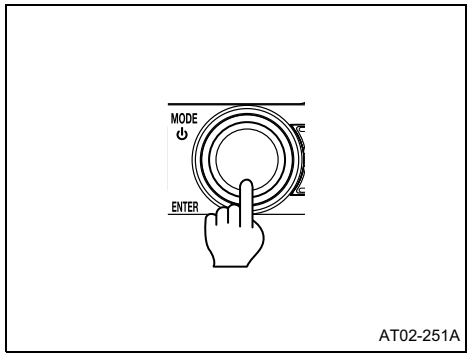

AT02-251A

**Turning on the radio**

Press the “**POWER**” button for 1 second or more. To turn on the radio, press the switch again.

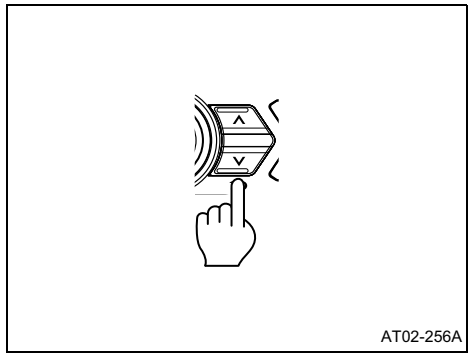
AT02-256A

**Tuning**

Manual tuning:
Press the “**Tune**” button for less than 1 second.
Each time the button is pressed, the frequency steps up (or down) to select the station of your choice.

Automatic tuning:
Press the “**Tune**” button for less than 2 seconds but more than 1 second.
The radio starts searching for stations, and stops when it finds a station.
Press and hold down the “**Tune**” button for more than 2 seconds. The radio keeps searching for stations within its available frequency band.
To cancel, press the button again.

***NOTICE:***

- *When the “**Tune**” button (“∧”) is pressed, the radio is tuned to the higher frequency range (step up), and to the lower frequency range (step down) when pressing the “**Tune**” button (“∨”).*
- *In either cases, if the radio cannot find stations, it continues searching.*

**Storing the stations (PRESET)**

Your favorite stations can be tuned by one touch operation if they are stored in the “**Preset**” buttons.

Maximum of 30 stations can be memorized:
12 in AM (6 each for AM1 and AM2.), and 18 in FM (6 each for FM1, FM2 and FM3.)

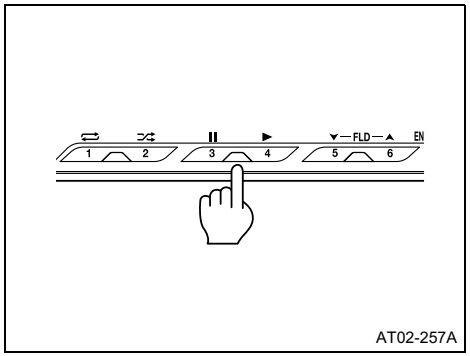

AT02-257A

1. Select the radio mode to be stored from “**FM1**”, “**FM2**”, “**FM3**”, “**AM1**” or “**AM2**”.
2. Tune in the station of your choice.
3. Press and hold down the “**Preset**” buttons you want to store in, for more than 2 seconds.
   When the station is stored, the “**Preset**” button number and station frequency appear on the display window.

## CD OPERATION

### Playing a disc (When there is no CD inserted)

Insert a disc into the “**Disc slot**” with the label side (printed side) facing up. The power will switch on and playback will start automatically.

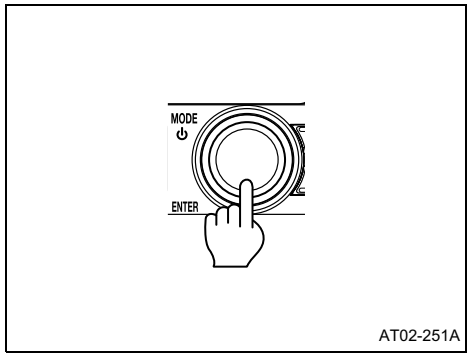

AT02-251A

### Playing a disc (When there is a CD inserted)

1. Press the “**MODE**” switch.

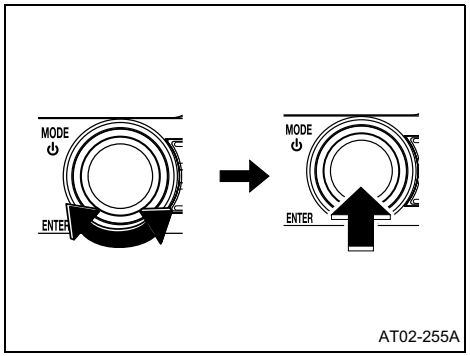

AT02-255A

2. Turn the “**MODE**” switch to select “**DISC**”, and then press the “**ENTER**” button.

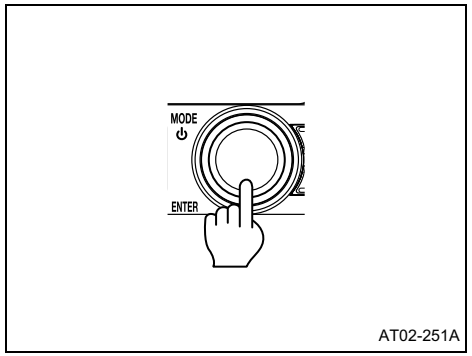

AT02-251A

**Turning off the player**

Press the “**POWER**” button for 1 second or more. To resume playback, press the switch again.

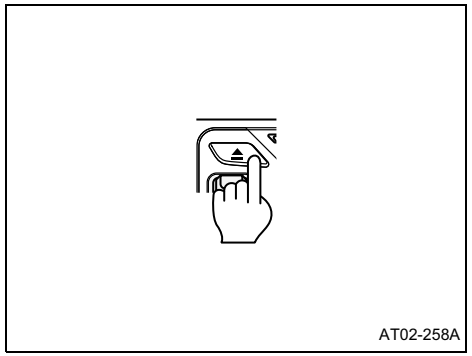
AT02-258A

**Ejecting the disc**

Press the “**Eject**” button to stop playback and eject the disc.

***NOTICE:***

*If a disc could not be ejected, contact nearest dealer for service.*

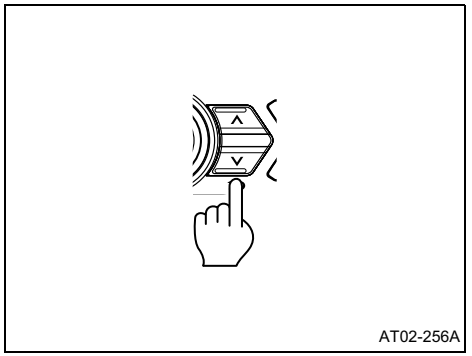
AT02-256A

**Track (File) selection**

Press the “**Track**” button (“∧ ∨”) to select the track of your choice.

∧: Advance to the next track (file).

∨: Return to the beginning of the track (file) being played. To return to the previous track (file), press the button again.

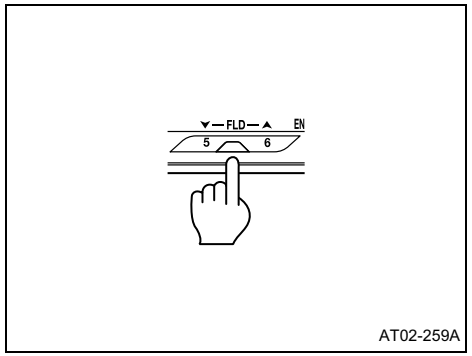

AT02-259A

**Selecting the folder**

For CD (MP3/WMA):
Press the "**5**" or "**6**" button to select the MP3/WMA folder.

▲: Advance to the next folder.

▼: Return to the previous folder.

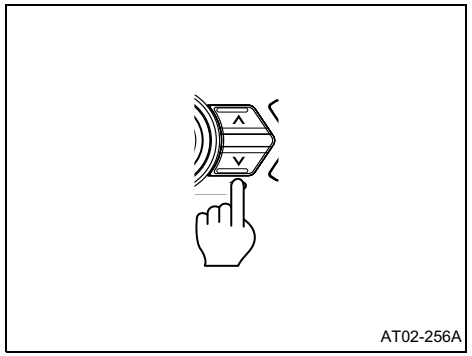
AT02-256A

**Fast forwarding/Fast reversing**

Press and hold the "**Track**" button ("∧ ∨") to fast forward or fast reverse the track (file).

∧: Fast forward

∨: Fast reverse. To stop fast forward or fast reverse, release the button.

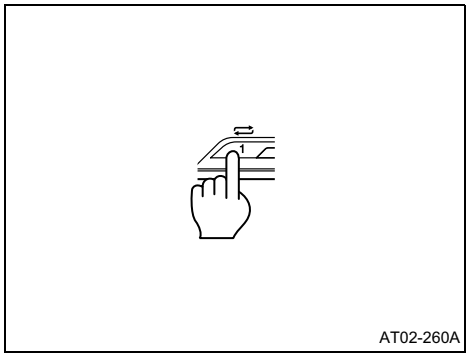

AT02-260A

**Repeat playback**

- For CD:
  Press the "**1**" button.
  "⇄" appears on the display window.
  To cancel, press the button again.
- For CD (MP3/WMA):
  Press the "**1**" button to repeat the same file being played. "⇄" appears on the display window.
  To cancel, press the button twice. "⇄" disappears.

- For CD (MP3/WMA):
  Press the “**1**” button twice to repeat the same folder being played. After the player has played the last file, it starts playing the first file of the same folder.
  “**FLD** ⇄” appears on the display window.
  To cancel, press the button again. “**FLD** ⇄” disappears.

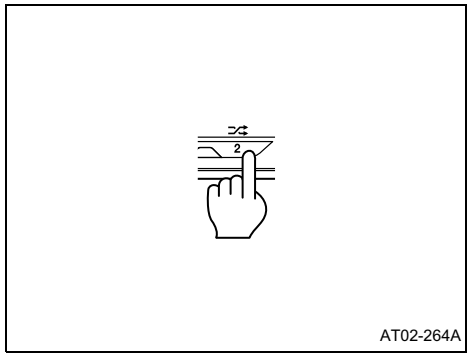

AT02-264A

**Random playback**

- For CD:
  Press the “**2**” button.
  “⤮” appears on the display window.
  To cancel, press the button again.
- For CD (MP3/WMA):
  Press the “**2**” button to play all files in the MP3/WMA disc in random order.
  “⤮” appears on the display window.
  To cancel, press the button twice. “⤮” disappears.
- For CD (MP3/WMA):
  Press the “2” button twice to play the files from the folder being played in the MP3/WMA disc in random order.
  After the player has played the last file, it starts playing the first file of the same folder.
  “FLD ⤮” appears on the display window.
  To cancel, press the button again. “FLD ⤮” disappears.

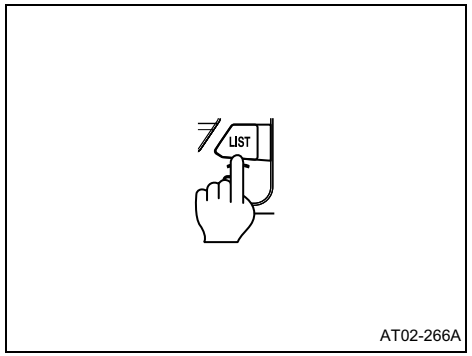

AT02-266A

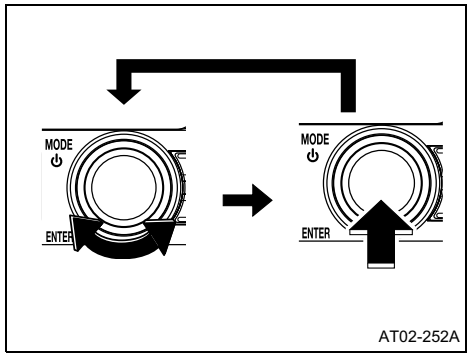

AT02-252A

**Selecting the music file from the category list**

For CD (MP3/WMA):

1. Press the “**LIST**” button for less than 1 second. “**LIST**” appears on the display window.
   To cancel the category selection mode, press the “**LIST**” button again or press the “**Back**” button.
2. Turn the “**MODE**” switch to select the category of your choice, and then press the “**ENTER**” button. The category changes in the following order: PLAYING ↔ FOLDER ↔ FILE ↔ PLAYING...
3. Turn the “**MODE**” switch to select the folder or file of your choice from the list, and then press the “**ENTER**” button. When the file is selected, the player starts playing the file. When “**FOLDER**” is selected, select the file in the folder to start playback.

To return to the list selection or category selection mode, press the “**Back**” button for less than 1 second.

To cancel the category selection mode, press and hold down the “**Back**” button for more than 1 second.

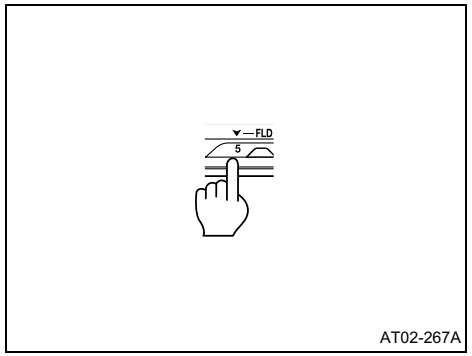

AT02-267A

**Go back to the first position (Home jump)**

You can go back to the first file of the first folder on the MP3/WMA disc being played from any position of it. This function is called "**Home Jump**".

For example:
If "**Home Jump**" is used when playing File 5 in Folder **4**, it goes back to File 1 in Folder 1 and starts playing.

Press and hold down the "**5**" button for more than 1 second.

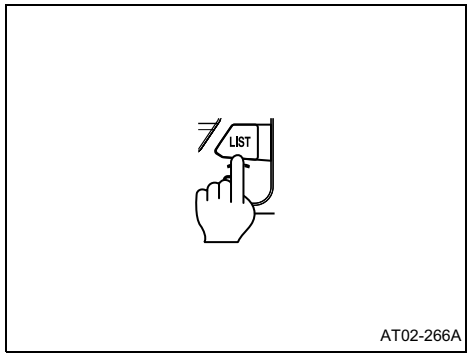

AT02-266A

**Display the text information**

1. Press and hold down the "**LIST**" button for more than 1 second.

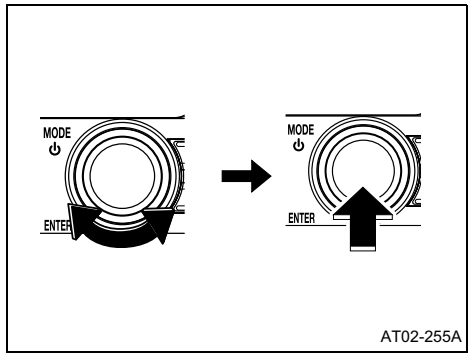

AT02-255A

2. Turn the "**MODE**" switch to select the display item of your choice, and then press the "**ENTER**" button.
   The display item changes in the following order.

- For CD:
  TR NO/TIME (Track number/Playback time) ↔ ALBUM (Album title) ↔ TRACK (Track title) ↔ ARTIST (Artist name) ↔ TR NO/TIME...
- For CD (MP3/WMA):
  FL/TR NO (Folder number/File number) ↔ TIME (Playback time) ↔ FOLDER (Folder name) ↔ FILE (File name) ↔ ALBUM (Album title)* ↔ TRACK (Track title) ↔ ARTIST (Artist name) ↔ FL/TR NO...
  *It is not displayed during the WMA file playback.

***NOTICE:***

- *If the text information is too long to fit into the display window, press and hold down the "**FUNC**" button for more than 1 second to switch to the next page.*
- *Texts recorded with characters other than alphanumeric characters and symbols will appear as "*****"(asterisks).*
- *If there is no text information stored in a music file, "**NO TITLE**" appears on the display window.*

**If “ERROR” appears in the display**

The following messages appear (blink) in the display window according to the status.

| Message | Description |
|---|---|
| LOAD | This message appears right after inserting a disc into the main unit or while reading TOC |
| READING | This message appears when reading the file format of the disc in the MP3/WMA mode. |
| CD CHECK | This message appears when the disc is stained or upside-down.<br>This message appears when a disc reading error or a media- dependent error occurs, including when a blank disc is inserted.<br>Check the disc in the player. |
| DECK ERROR* | This message appears when the player cannot operate for some reason. Eject the disc from the audio system. |
| NO SUPPORT | This message appears when the disc is in one of the following conditions:<br>● Not in ISO9660 Level 1, 2 format<br>● Not containing MP3/WWA data (including MP3/WMA extension files)<br>● Containing only SKIP FILEs |

*: If a disc could not be ejected, please contact nearest dealer for service.

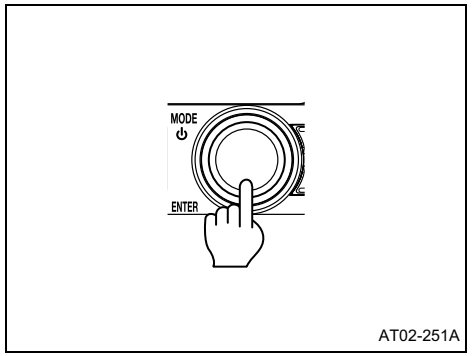

AT02-251A

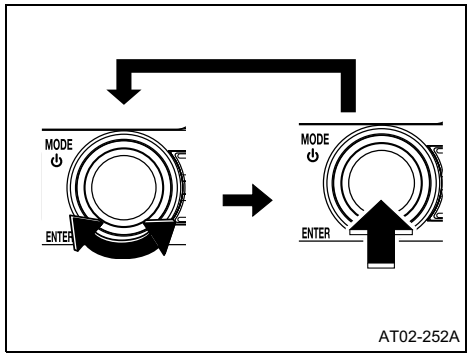

AT02-252A

**USB OPERATION**

**Playing music files in the USB memory (When the USB memory is not yet connected)**

When the USB memory is connected to the "**USB terminal**" users can listen to music in the USB memory.

1. Connect the USB memory to the "**USB terminal**".
2. Press the "**MODE**" switch.
3. Turn the "**MODE**" switch to select "**USB**", and then press the "**ENTER**" button.
   The music file starts playing.

**Playing music files in the USB memory (When the USB memory is connected)**

1. Press the "**MODE**" switch.
2. Turn the "**MODE**" switch to select "**USB**", and then press the "**ENTER**" button.
   The music file starts playing.

| ⚠ CAUTION |
| --- |
| **Do not connect, operate or remove the USB memory while driving.** |

***NOTICE:***

- *Do not remove the USB memory or switch the ignition switch to ACC OFF when the USB memory is being accessed (playback). This may damage the data. We recommend making a backup of your data in case you accidentally delete it.*
- *Depending on the USB memory used (non-brand products, USB memories which have been damaged due to external factors), there may be cases where connection is not possible, or where the operation is unstable.*
- *When the USB mode is switched to other modes and then switched back again, the main unit returns to the music file played last.*

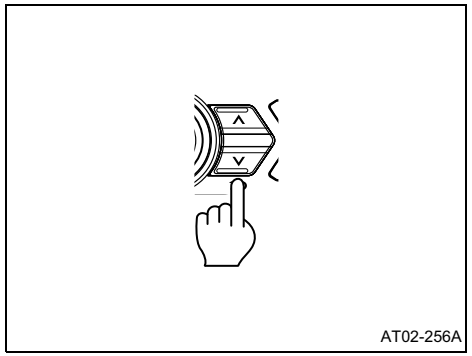

AT02-256A

**File selection**

Press the "**Track**" button ("∧ ∨") to select the music file of your choice.

∧: Advance to the next file.

∨: Return to the beginning of the file being played. To return to the previous file, press the button again.

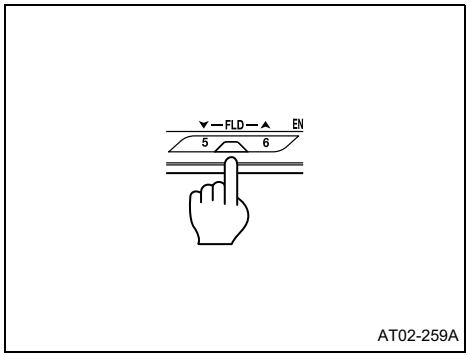


AT02-259A

**Selecting the folder**

Press the "**5**" or "**6**" button to select the MP3/WMA folder.

▲: Advance to the next folder.

▼: Return to the previous folder.

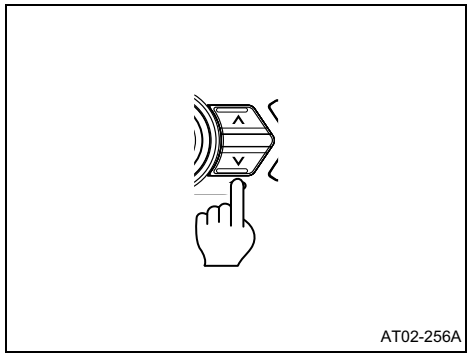


**Fast forwarding/Fast reversing**

Press and hold the "**Track**" button ("∧ ∨") to fast forward or fast reverse the music file.

∧: Fast forward.

∨: Fast reverse. To stop fast forward or fast reverse, release the button.

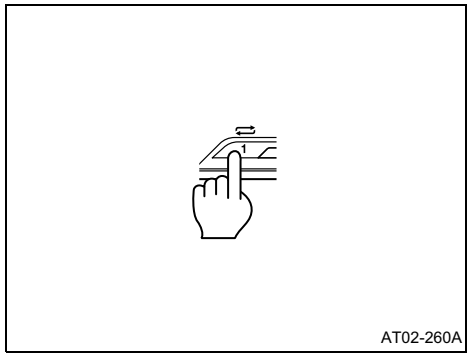


**Repeat playback**

Press the "**1**" button to repeat the same file being played.
"🔁" appears on the display window.
To cancel, press the button twice. "🔁" disappears.

Press the "**1**" button twice to repeat the same folder being played. After the player has played the last file, it starts playing the first file of the same folder.
"**FLD** 🔁" appears on the display window.
To cancel, press the button again. "**FLD** 🔁" disappears.

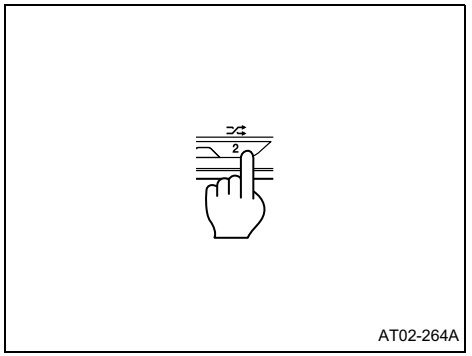


**Random playback**

Press the "**2**" button to play all files in the USB Memory in random order.
"🔀" appears on the display window.
To cancel, press the button twice. "🔀" disappears.

Press the “**2**” button twice to play the files from the folder being played in the USB memory in random order.
After the player has played the last file, it starts playing the first file of the same folder.

“**FLD** ⤮” appears on the display window. To cancel, press the button again. “**FLD** ⤮” disappears.

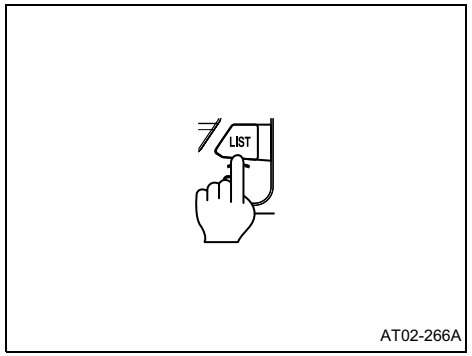

AT02-266A

**Selecting the music file from the category list**

1. Press the “**LIST**” button for less than 1 second. “**LIST**” appears on the display window.
   To cancel the category selection mode, press the “**LIST**” button again or press the “**Back**” button.

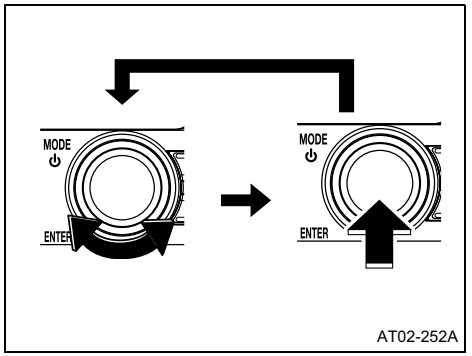

AT02-252A

2. Turn the “**MODE**” switch to select the category of your choice, and then press the “**ENTER**” button. The category changes in the following order: PLAYING ↔ FOLDER ↔ FILE ↔ PLAYING...

3. Turn the “**MODE**” switch to select the folder or file of your choice from the list, and then press the “**ENTER**” button.
   When the file is selected, the player starts playing the file.
   When “**FOLDER**” is selected, select the file in the folder to start playback.
   To return to the list selection or category selection mode, press the “**Back**” button for less than 1 second.
   To cancel the category selection mode, press and hold down the “**Back**” button for more than 1 second.

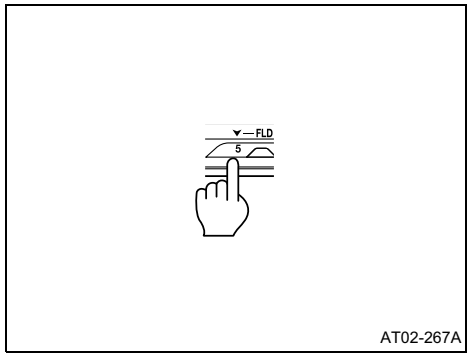

AT02-267A

**Go back to the first position (Home jump)**

You can go back to the first file of the first folder on the USB memory being played from any position of it. This function is called “**Home Jump**”.

For example:
If “**Home Jump**” is used when playing File 5 in Folder 4, it goes back to File 1 in Folder 1 and starts playing.

Press and hold down the “**5**” button for more than 1 second.

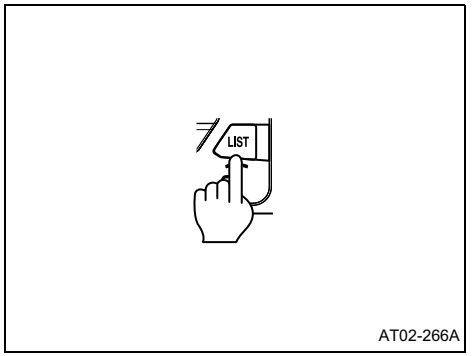

AT02-266A

**Display the text information**

1. Press and hold down the “**LIST**” button for more than 1 second.

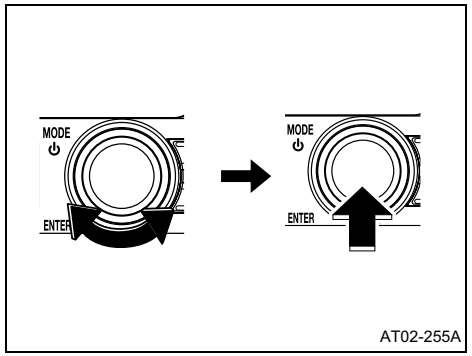


2. Turn the "**MODE**" switch to select the display item of your choice, and then press the "**ENTER**" button.
   The display item changes in the following order.
   FL/TR NO (Folder number/File number) ↔ TIME (Playback time) ↔ FOLDER (Folder name) ↔ FILE (File name) ↔ ALBUM (Album title)* ↔ TRACK (Track title) ↔ ARTIST (Artist name) ↔ FL/TR NO...
   *:It is not displayed during the WMA file playback.

***NOTICE:***

- *If the text information is too long to fit into the display window, press and hold down the "**FUNC**" button for more than 1 second to switch to the next page.*
- *Texts recorded with characters other than alphanumeric characters and symbols will appear as "*****" (asterisks).*
- *If there is no text information stored in a music file, "**NO TITLE**" appears on the display.*

**If “ERROR” appears in the display**

The following messages appear (blink) in the display window according to the status.

| Message | Description |
|---|---|
| READING | This message appears when reading the file format of the USB devices. |
| USB ERROR 1 | This message appears when the player cannot operate for some reason. Disconnect the USB device from the audio system. |
| USB ERROR 2 | This message appears when the connected USB device is disabled. Connect another USB device. |
| USB ERROR 3 | This message appears when the USB hub is connected. Remove the USB hub from the audio system. |
| NO MUSIC | This message appears when a blank USB device or the USB device that does not contain files with playback extensions is connected. |
| READ ERROR | This message appears if a problem is detected in the USB device.<br>Disconnect the USB device, and check the USB device itself. |
| NO SUPPORT | This message appears when the USB device contains no MP3/WMA data (including MP3/WMA extension files) or contains only SKIP FILEs. |

**iPod OPERATION**

When the iPod is connected to the "**USB terminal**" using the iPod connection cable, users can operate the iPod from the main unit and listen to music on the iPod. See the instruction manual for the iPod connection cable on how to connect and set the connection cable.

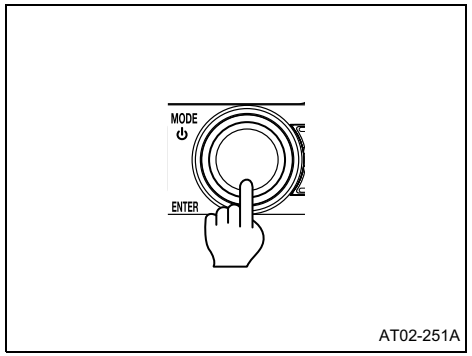

AT02-251A

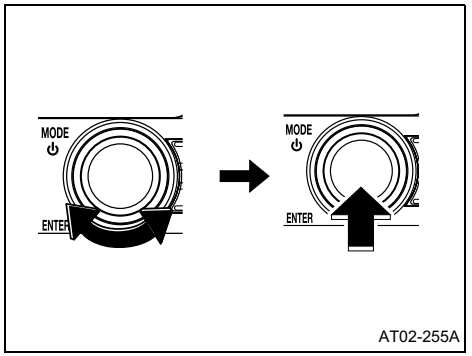

AT02-255A

**Playing music files in the iPod (When the iPod is not yet connected)**

1. Use the iPod connection cable, and connect the iPod to the "**USB terminal**".
2. Press the "**MODE**" switch.
3. Turn the "**MODE**" switch to select "**iPOD**", and then press the "**ENTER**" button. "**READING**" appears on the display window, and it takes a few seconds to recognize the music files in the iPod. When the music files in the iPod are recognized, iPod playback begins. It will start the playback with the music file that was playing on the iPod before it was connected to the main unit. If the main unit cannot detect that file, it will start playing from the first music file.

**Playing Music Files in the iPod (When the iPod is connected)**

1. Press the “**MODE**” switch.
2. Turn the “**MODE**” switch to select “**iPOD**”, and then press the “**ENTER**” button. The music file starts playing.

**⚠ CAUTION**

- **Either place the iPod and iPod connection cable somewhere where they do not interfere with driving or temporarily secure them at a location where they are not in the way. They could impede driving and cause a traffic accident.**
- **Make sure not to touch the terminals of the iPod connection cable.**
- **Do not connect, operate or remove the iPod while driving.**

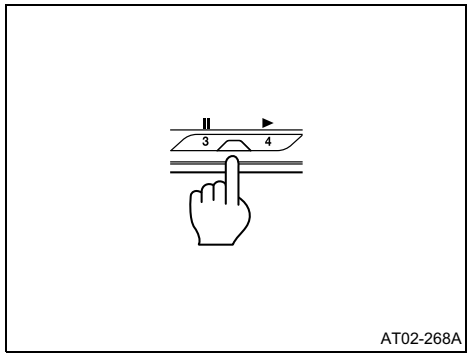

AT02-268A

**Pausing the music**

Press the “**3**” button to pause the music. To resume, press the “**4**” button.

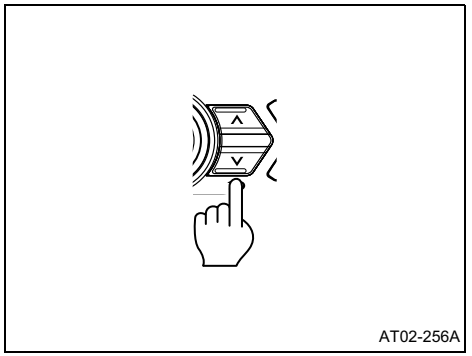
AT02-256A

**File selection**

Press the “**Track**” button (“∧ ∨”) to select the music file of your choice.

∧: Advance to the next file.

∨: Return to the beginning of the file being played. To return to the previous file, press the button again.

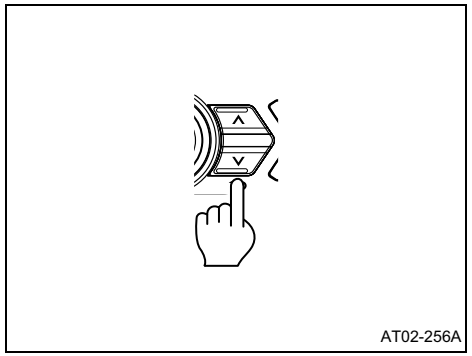


**Fast forwarding/Fast reversing**

Press and hold the "**Track**" button ("∧ ∨") to fast forward or fast reverse the music file.

∧: Fast forward.

∨: Fast reverse. To stop fast forward or fast reverse, release the button.

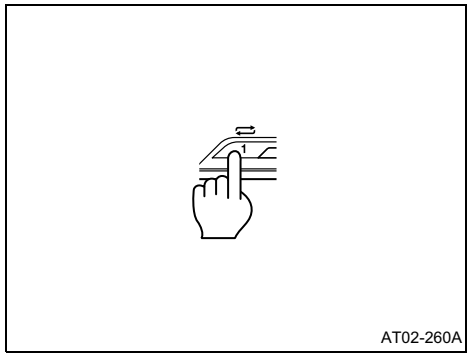


**Repeat playback**

Press the "**1**" button to repeat the same file being played.
"⇄" appears on the display window.
To cancel, press the button twice. "⇄" disappears.

***NOTICE:***

*When the iPod is removed from the main unit under the repeat setting, the iPod switches to the repeat playback mode.*

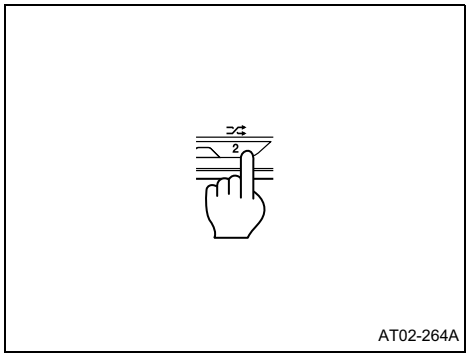


**Random playback (SHUFFLE)**

Press the "**2**" button.

The mode changes as follows each time you press the button: OFF → Album Shuffle → Track Shuffle → OFF

- Album Shuffle: “⤮” appears on the display window and the albums will be played back in shuffle mode (tracks within an album will not be shuffled).
- Track Shuffle: “**FLD** ⤮” appears on the display window and the selected list will be played back in shuffle mode.

***NOTICE:***

*When the iPod is removed from the main unit under the shuffle setting, the iPod switches to the shuffle playback mode.*

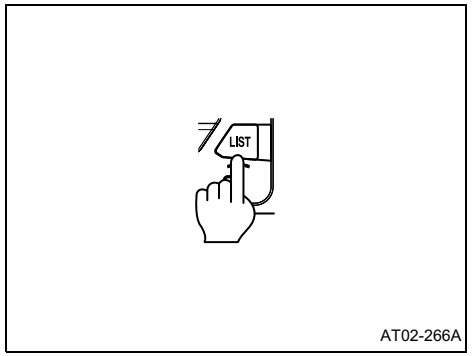

AT02-266A

**Selecting the music file from the category list**

You can search for a music file you want to listen to from categories such as artists or genres.

1. In the iPod mode, press the “**LIST**” button.
   The category appears on the display window.

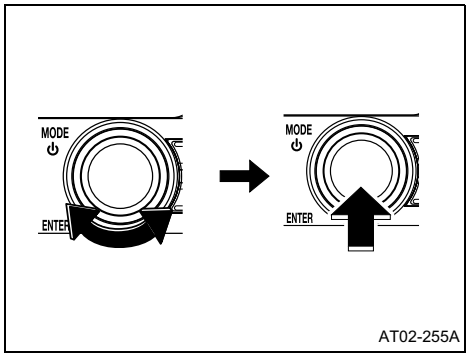

AT02-255A

2. Turn the “**MODE**” switch to select the category of your choice, and then press the “**ENTER**” button.

The category changes in the following order:
PLAYING ↔ PLAYLISTS ↔ ARTISTS ↔ ALBUMS ↔ SONGS ↔ PODCASTS ↔ GENRES ↔ COMPOSERS ↔ AUDIOBOOKS ↔ PLAYING...

The following information appears on the display according to the category selected:

- PLAYING: displays the list of the music being played
- PLAYLISTS: displays the list of playlists
- ARTISTS: displays the artist list
- ALBUMS: displays the album list
- SONGS: displays the song list
- PODCASTS: displays the list of the podcast
- GENRES: displays the genre list
- COMPOSERS: displays the composer list
- AUDIOBOOKS: displays the audio book list

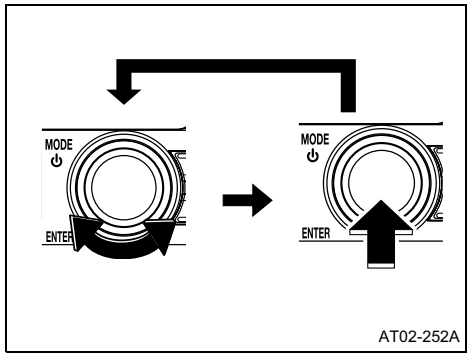


3. Turn the "**MODE**" switch to display the selection mode of your choice, and then press the "**ENTER**" button.
   It repeats the operation until the SONGS selection mode appears on the display window.
   The order for the display of the SONGS selection mode for each category is shown below.
   When SONGS, EPISODES or AUDIOBOOKS (CHAPTERS) is selected, the music file selected is played.

| Category | Order for the display of the SONGS selection mode |
|---|---|
| PLAYING | SONGS |
| PLAYLISTS | PLAYLISTS → SONGS |
| ARTISTS | ARTISTS → ALBUMS → SONGS |
| ALBUMS | ALBUMS → SONGS |
| SONGS | SONGS |
| PODCASTS | PODCASTS → EPISODES |
| GENRES | GENRES → ARTISTS → ALBUMS → SONGS |
| COMPOSERS | COMPOSERS → ALBUMS → SONGS |
| AUDIOBOOKS | AUDIOBOOKS → (CHAPTERS) |

***NOTICE:***

*Follow the operations below to play music files:*

- *Select a music file in the list at the lowest hierarchy level to play.*
- *Press the "**Back**" button while displaying the list at the middle hierarchy level.*

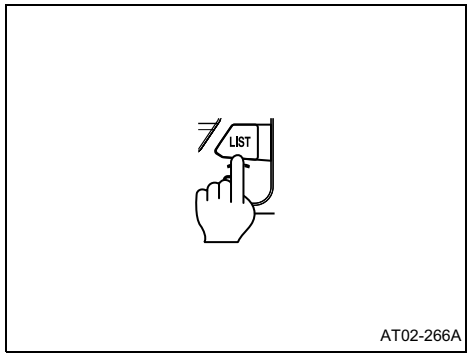


**Display the text information**

1. Press and hold down the "**LIST**" button for more than 1 second.

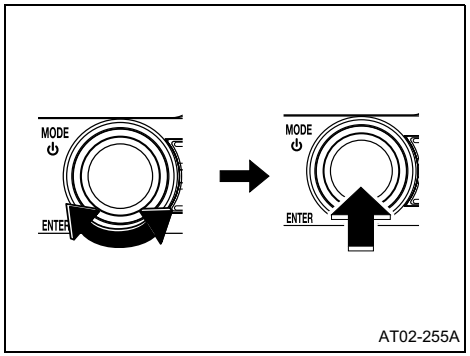


2. Turn the "**MODE**" switch to select the display item of your choice, and then press the "**ENTER**" button.
   The display item changes in the following order.
   TR NO/TIME (File number/Playback time) ↔ ALBUM (Album title) ↔ TRACK (Track title) ↔ ARTIST (Artist name) ↔ TR NO/TIME...

***NOTICE:***

- *If the text information is too long to fit into the display window, press and hold down the "**FUNC**" button for more than 1 second to switch to the next page.*
- *Texts recorded with characters other than alphanumeric characters and symbols will appear as "*****" (asterisks).*
- *If there is no text information stored in a music file, "**NO TITLE**" appears on the display window.*

**If “ERROR” appears in the display**

The following messages appear (blink) in the display window according to the status.

| Message | Description |
|---|---|
| READING | This message appears when reading the file format of the iPod. |
| READ ERROR | This message appears if a problem is detected in the iPod.<br>Disconnect the iPod, and check the iPod itself. |
| COMM ERROR | This message appears when an iPod communication error occurs.<br>Reconnect the iPod connection cable. |
| NO SONGS | This message appears when a blank iPod is connected. |
| NO PLAYLIST | This message appears when a blank PLAYLIST is selected. |

**Bluetooth AUDIO OPERATION**

Connecting a Bluetooth compatible audio player or mobile phone (henceforth "**portable device**") to this unit allows you to operate them from the system and listen to music.

In addition, as the connection between the unit and the portable device is wireless, users will not face problems associated with cable connections.

This unit supports Bluetooth. Bluetooth is a wireless data system which allows users to listen to music without the need to connect the portable device with wires.

If the portable device is not Bluetooth-compatible, this function is not available.

| ⚠ CAUTION |
| --- |
| **Do not connect the portable device while driving.** |

**HINT:**

- **Do not leave the portable device inside the vehicle. (The interior of the vehicle may become too hot under extreme hot weather.)**
- **Do not set the portable device too close to this unit. When the device and the unit are too close to each other, sound quality may deteriorate and connection problems may arise.**

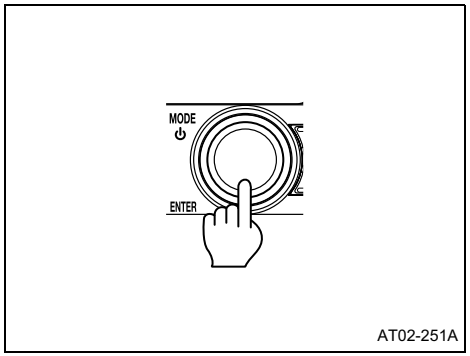


**Playing a music**

1. Press the "**MODE**" switch.

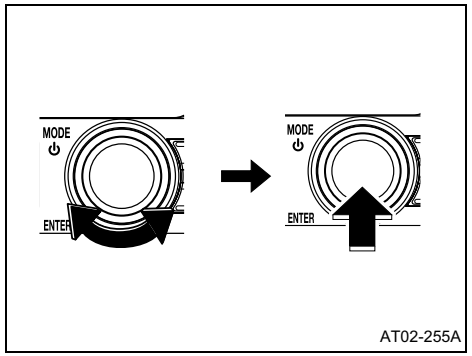


2. Turn the "**MODE**" switch to select "**BT-AUDIO**", and then press the "**ENTER**" button.
   The music on the Bluetooth-compatible portable device that is connected will start.
   When the registered device is not connected, the display window shows "**NO CONNECT**".

***NOTICE:***

- *First connect the portable device to the unit before performing the following operation.*
  *See "Registering a Bluetooth device" on page 2-153.*
- *Bluetooth audio operation is subject to portable device compatibility.*
- *Operation of the portable device via this unit differs depending on the specifications of the portable device.*
- *Depending on the Bluetooth-compatible portable device that is connected to this unit, the music will not start and may be paused.*
- *When the player is connected to an AVRCP Ver.1.0-compatible portable device, "**STREAMING**" appears on the display window and the functions of your devices may be partially limited.*

**Stop Playback**

Switch to another audio mode.

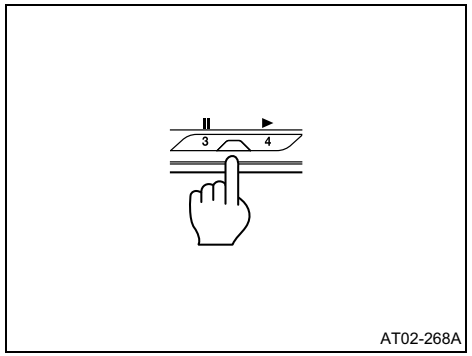

AT02-268A

**Pausing a music**

Press the “**3**” button to pause the music. To resume, press the “**4**” button.

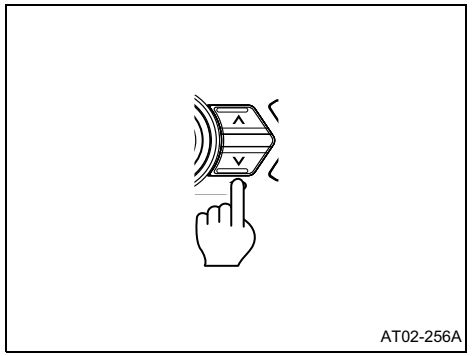
AT02-256A

**Track selection**

Press the “**Track**” button (“∧ ∨”) to select the track of your choice.

∧: Advance to the next track.

∨: Return to the beginning of the track being played. To return to the previous track, press the button again.

***NOTICE:***

*Operation of the portable device via this unit differs depending on the specifications of the portable device.*

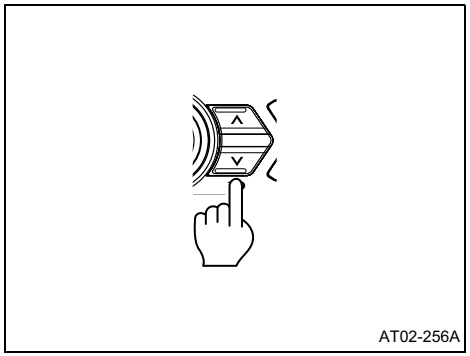
AT02-256A

**Fast forwarding/Fast reversing**

Press and hold the “**Track**” button (“∧ ∨”) to fast forward or fast reverse the track.

∧: Fast forward.

∨: Fast reverse. To stop fast forward or fast reverse, release the button.

***NOTICE:***

*Operation of the portable device via this unit differs depending on the specifications of the portable device.*

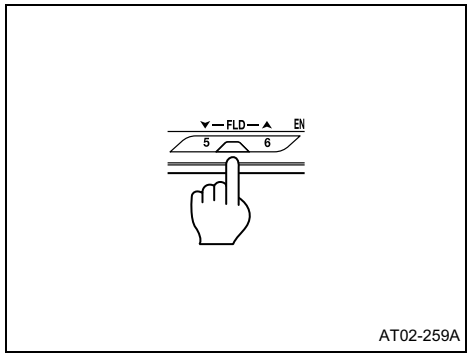

AT02-259A

**Selecting the album**

Press the “**5**” or “**6**” button to select an album.

▲: Advance to the next album.

▼: Return to the previous album.

***NOTICE:***

*Operation of the portable device via this unit differs depending on the specifications of the portable device.*

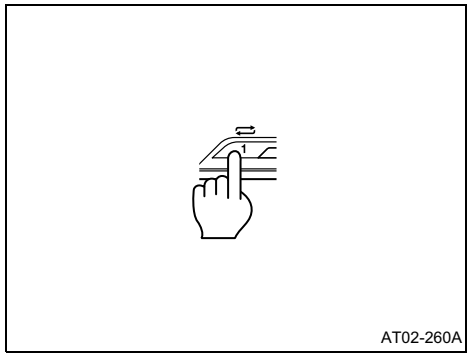
AT02-260A

**Repeat playback**

Press the “**1**” button to repeat the same track being played. “⇄” appears on the display window.

To cancel, press the button twice. “⇄” disappears.

Press the “**1**” button twice to repeat the same album being played. After the player has played the last file, it starts playing the first file of the same album.

“**FLD ⇄**” appears on the display window.

To cancel, press the button again. “**FLD ⇄**” disappears.

***NOTICE:***

*Operation of the portable device via this unit differs depending on the specifications of the portable device.*

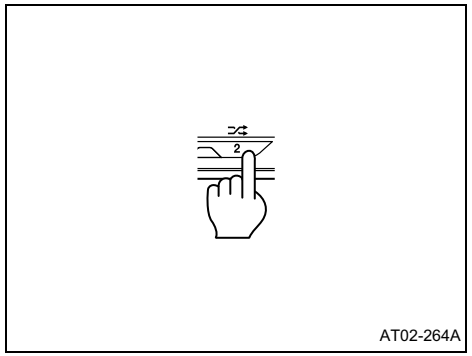

AT02-264A

**Random playback**

Press the "**2**" button to play all tracks in the Bluetooth Audio in random order.
"⤮" appears on the display window.
To cancel, press the button twice. "⤮" disappears.

Press the "**2**" button twice to playback tracks on the album being played in random order.
After the player has played the last track, it starts playing the first track of the same album.
"**FLD** ⤮" appears on the display window."**FLD** ⤮" appears on the display window.
To cancel, press the button again. "**FLD** ⤮" disappears.

***NOTICE:***

Operation of the portable device via this unit differs depending on the specifications of the portable device.

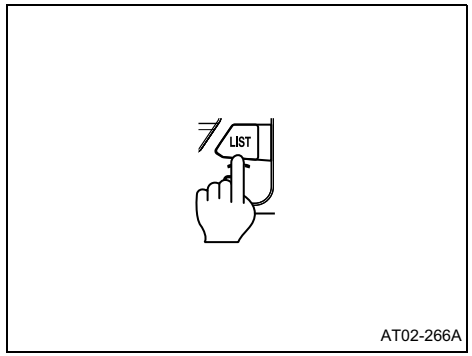

AT02-266A

**Display the text information**

1. Press and hold down the "**LIST**" button for more than 1 second.

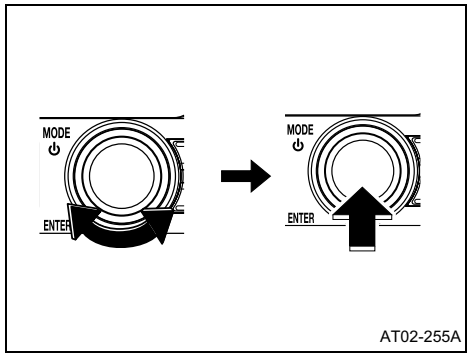

AT02-255A

2. Turn the “**MODE**” switch to select the display item of your choice, and then press the “**ENTER**” button.
   The display item changes in the following order.
   TR NO/TIME (Track number/Playback time) ↔ ALBUM (Album title) ↔ TRACK (Track title) ↔ ARTIST (Artist name) ↔ TR NO/TIME...

***NOTICE:***

- *If the text information is too long to fit into the display window, press and hold down the “**FUNC**” button for more than 1 second to switch to the next page.*
- *Texts recorded with characters other than alphanumeric characters and symbols will appear as “*****” (asterisks).*
- *If there is no text information stored in a music file, “**NO TITLE**” appears on the display window.*

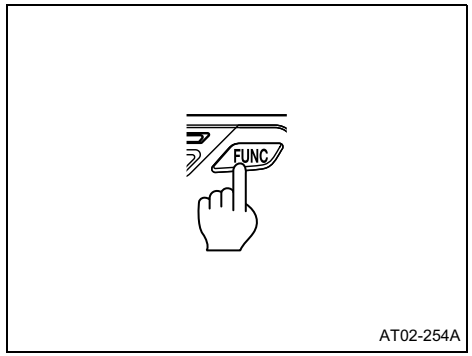

AT02-254A

**Displaying the registered portable device**

1. Press the “**FUNC**” button.

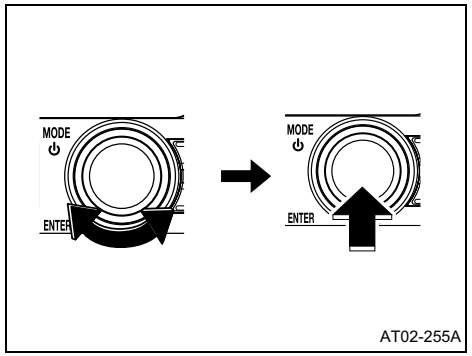


2. Turn the “**MODE**” switch to select “**BLUETOOTH**”, and then press the “**ENTER**” button.
3. Turn the “**MODE**” switch to select “**LIST AUDIO**”, and then press the “**ENTER**” button.
4. Turn the “**MODE**” switch to select device name, and then press the “**ENTER**” button.
5. Turn the “**MODE**” switch to select the display item of your choice, and then press the “**ENTER**” button.

- SELECT:
  Connect the registered portable device. “**SEARCHING**” appears on the display window.
- DISCONNECT:
  Disconnect the registered portable device.
  When “**DISCONNECT?**” appears on the display window, press the “**ENTER**” button.
- DELETE:
  Delete the registered portable device.
  When “**DELETE?**” appears on the display window, press the “**ENTER**” button.
- METHOD:
  Switch the connection method. Select “**FROM VEHICLE**”, to connect the portable device by operating from the unit. Select “**FROM AUDIO**”, to connect the unit from the portable device.

**If “ERROR” appears in the display**

The following messages appear (blink) in the display window according to the status.

| Message | Description |
|---|---|
| NO CONNECT | This message appears when the unit is not connected to the portable device. |

**AUX OPERATION**

By connecting the 3.5 mm headphone jack of your own portable audio device to the “**Mini jack**”, you can listen to your own music through this unit.

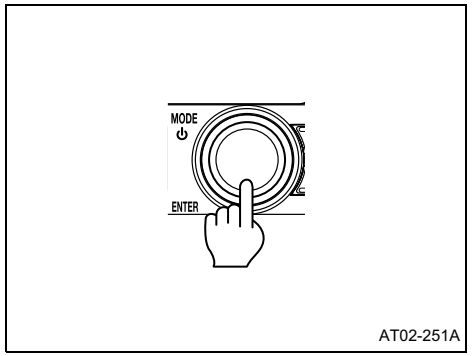

AT02-251A

1. Use the mini plug cable, and connect the portable audio device to the “**Mini jack**”.
2. Press the “**MODE**” switch.

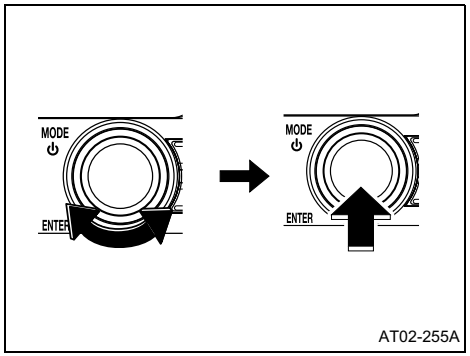

AT02-255A

3. Turn the “**MODE**” switch to select “**AUX**”, and then press the “**ENTER**” button.
   Connecting the mini plug cable to the “**Mini jack**” also establishes the AUX mode and enable you to use the portable audio device.
   When the mini plug cable is disconnected from the main unit, the AUX mode is cancelled.

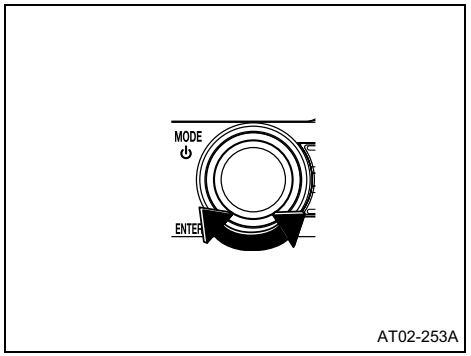

AT02-253A

**Adjusting the volume**

1. Turn the "**Volume adjust**" knob clockwise or counterclockwise to adjust the volume.
   Turn clockwise: Increase the volume.
   Turn counterclockwise: Decrease the volume.

**⚠ CAUTION**

- **Either place the portable audio device and mini plug cable somewhere where they do not interfere with driving or temporarily secure them at a location where they are not in the way. They could impede driving and cause a traffic accident.**
- **Make sure not to touch the terminals of the mini plug cable.**
- **Do not connect, operate or remove the portable audio device while driving.**

***NOTICE:***

- *The volume set by adjustment in the AUX mode is effective in the AUX mode only.*
- *To power the portable audio device, use the battery or other power source supplied with the device.*
- *The AUX device cannot be controlled from the main unit.*
- *Reduce the AUX volume to prevent speaker damage.*

**HANDSFREE OPERATION**

This unit supports Bluetooth. Bluetooth is a wireless data system by which you can call without your mobile phone being connected with a cable or placed on a cable.
If your mobile phone does not support Bluetooth, this unit cannot function.

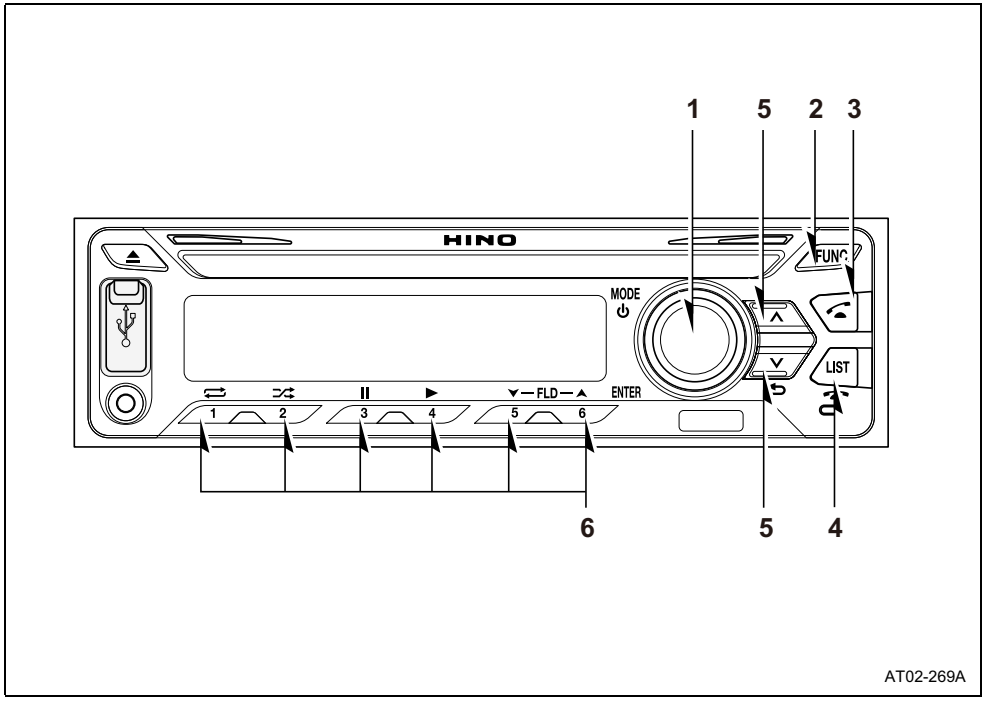


1. MODE switch
   ENTER button
   Volume adjust knob
2. FUNC button
3. Off hook button
4. On hook button
5. Level adjust buttons
6. Speed dial buttons

***NOTICE:***

- *First connect the mobile phone to the unit before performing the following operation.*
  *See “Registering a Bluetooth device” on page 2-153.*
- *Do not leave your mobile phone in the vehicle. The temperature inside the vehicle may be high and damage the phone.*
- *In the following conditions, the system may not function.*
  - *The mobile phone is turned off.*
  - *The current position is outside the communication area.*
  - *The mobile phone is not connected.*
  - *The mobile phone has a low battery.*
- *You can register mobile phones and store phone numbers to the unit as follows:*
  - *Up to 1,000 phone numbers can be stored.*
  - *Up to 6 phone numbers can be stored in the speed dial list.*

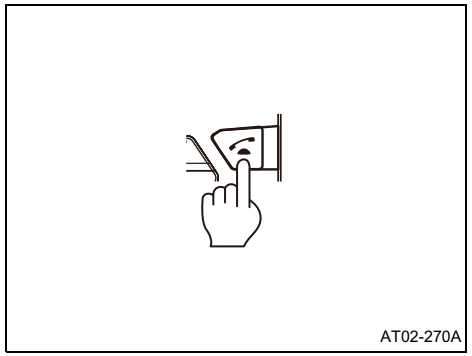
AT02-270A

**OPERATING THE HANDSFREE SYSTEM**

**Making a phone call by entering a phone number**

1. Press the “**Off hook**” button.

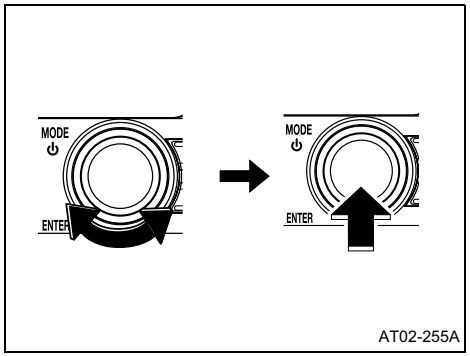

AT02-255A

2. Turn the “**MODE**” switch to select “**ENTER NUMBER**”, and then press the “**ENTER**” button. “**INPUT NUMBER**” appears on the display window.

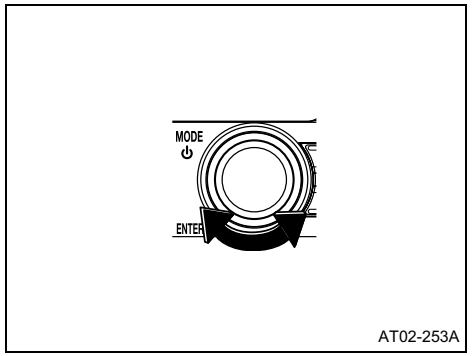

AT02-253A

3. Turn the “**MODE**” switch to select a phone number. You can enter phone numbers by one digit at a time.
   Numeric character (0-9) and symbols (*, **#**, +) are available. You can use the symbols (+) only for the first digit.
   “**Level adjust**” button (∧): Advance to the next digit.
   “**Level adjust**” button (∨): Delete the entered digit

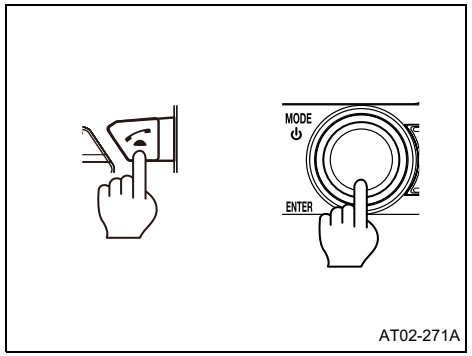

AT02-271A

4. After entering the phone number, press the “**Off hook**” button or the “**ENTER**” button.
   “**CALLING**” appears on the display window and a call is made to the selected phone number.
   When the person receives the call, you can talk in handsfree mode.

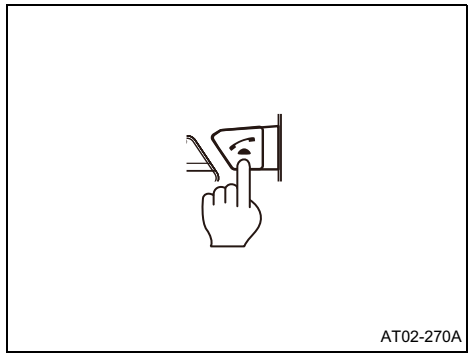
AT02-270A

**Making a phone call using phonebook**

1. Press the “**Off hook**” button.

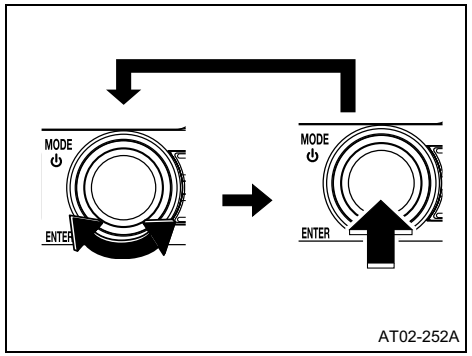

AT02-252A

2. Turn the “**MODE**” switch to select “**PHONEBOOK**”, and then press the “**ENTER**” button.
   The phonebook data appears.
3. Turn the “**MODE**” switch to select the phone number of your choice, and then press the “**ENTER**” button.
   Select in the following order:
   Initial → Name → Phone number
   “**CALLING**” appears on the display window and a call is made to the selected phone number.
   You can also make a call by pressing the “**Off hook**” button.
   When the person receives the call, you can talk in handsfree mode.

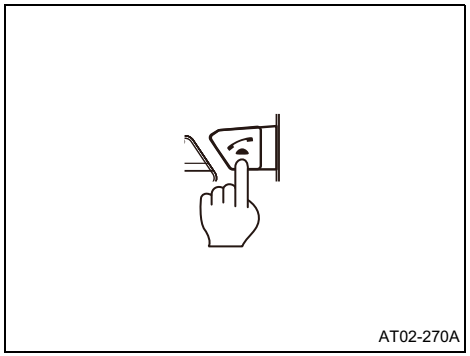
AT02-270A

**Making a phone call using missed call history**

1. Press the “**Off hook**” button.

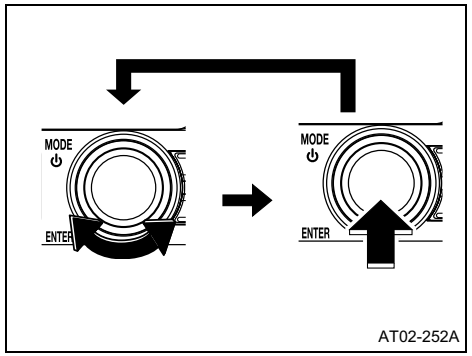

AT02-252A

2. Turn the “**MODE**” switch to select “**MISSED**”, and then press the “**ENTER**” button.
   The phone number of the previous missed call appears on the display window.
3. Turn the “**MODE**” switch to select the phone number of your choice, and then press “**ENTER**” button.
   “**CALLING**” appears on the display window and a call is made to the selected phone number.
   You can also make a call by pressing the “**Off hook**” button.
   When the person receives the call, you can talk in handsfree mode.

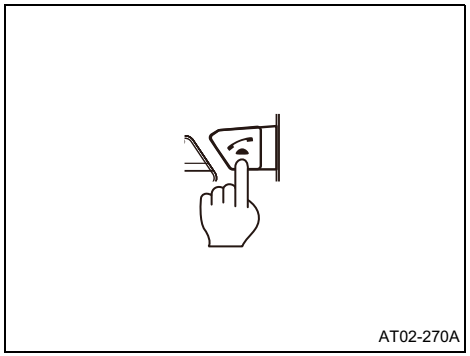
AT02-270A

**Making a phone call using incoming call history**

1. Press the “**Off hook**” button.

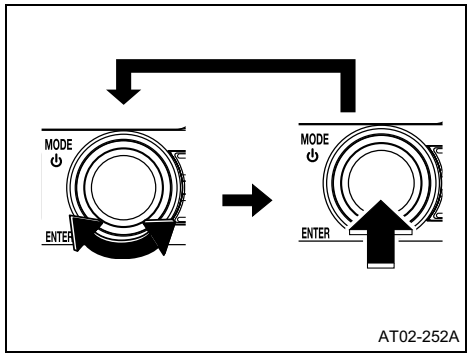

AT02-252A

2. Turn the “**MODE**” switch to select “**INCOMING**”, and then press the “**ENTER**” button.
   The person (phone number or name) who made the previous incoming call appears.
3. Turn the “**MODE**” switch to select the person (phone number or name) of your choice, and then press the “**ENTER**” button.
   “CALLING” appears on the display window and a call is made to the selected phone number.
   You can also make a call by pressing the “**Off hook**” button.
   When the person receives the call, you can talk in handsfree mode.

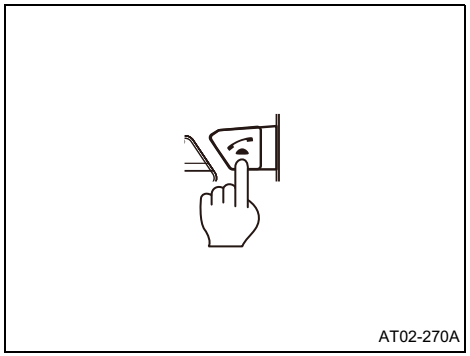
AT02-270A

**Making a phone call using outgoing call history**

1. Press the “**Off hook**” button.

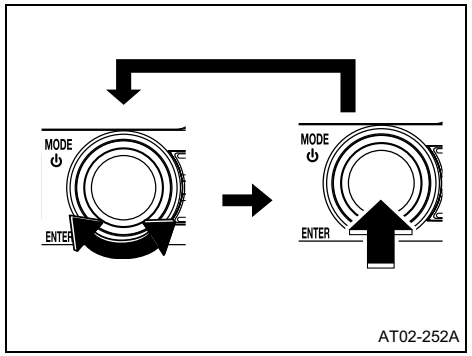


2. Turn the “**MODE**” switch to select “**OUTGOING**”, and then press the “**ENTER**” button.
   The person (phone number or name) you called appears on the display window.
3. Turn the “**MODE**” switch to select the person (phone number or name) of your choice, and then press the “**ENTER**” button.
   “CALLING” appears on the display window and a call is made to the selected phone number.
   You can also make a call by pressing the “**Off hook**” button.
   When the person receives the call, you can talk in handsfree mode.

**Answering a call**

When your phone set receives a call, “**INCOMING**”, followed by the person (phone number or name) appears on the display window.

- If there is a call that has been registered, the caller's name appears on the display window.
- If there is a call that has not been registered, only the number appears on the display window.
- If there is a private call, “**UNAVAILABLE**” appears on the display window.
- You can refuse a call by pressing the “**On hook**” button when a call is incoming

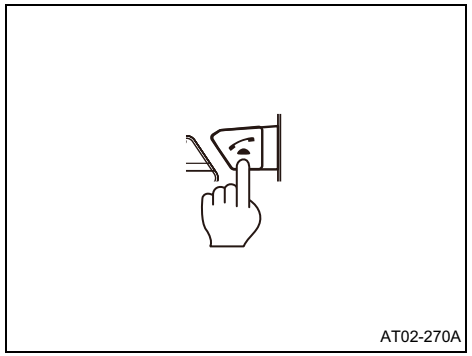


Press the “**Off hook**” button and use handsfree to talk.
When you have finished the call, press the “**On hook**” button.

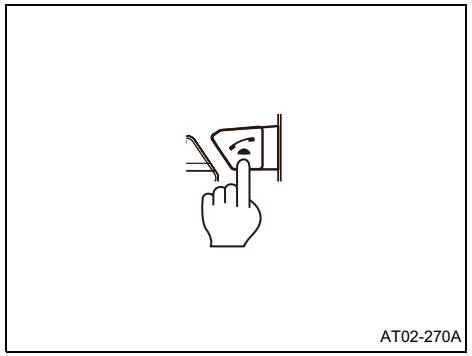


**Registering a speed dial by entering a phone number**

Up to 6 phone numbers and names can be registered in the “**Speed dial**” buttons and you can call the person in a one-touch operation.

1. Press the “**Off hook**” button.

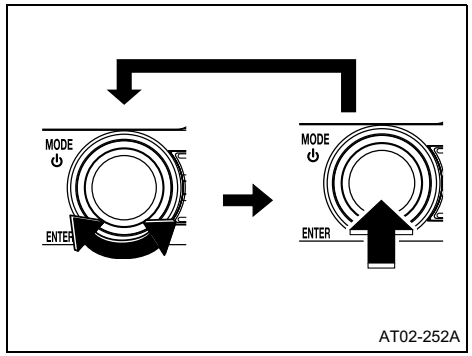


2. Turn the “**MODE**” switch to select “**ENTER NUMBER**”, and then press the “**ENTER**” button.
“**INPUT NUMBER**” appears on the display window.

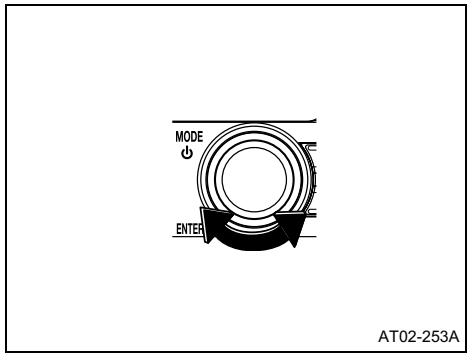

AT02-253A

3. Turn the "**MODE**" switch to select a phone number.
   You can enter phone numbers by one digit at a time.
   Numeric character (0-9) and symbols (*, **#**, +) are available. You can use the symbols (+) only for the first digit.

"**Level adjust**" button(∧):
Advance to the next digit.

"**Level adjust**" button(∨):
Delete the entered digit and return to the previous digit.

You can also select phone numbers from the phonebook.
See "Making a phone call using phonebook" on page 2-195

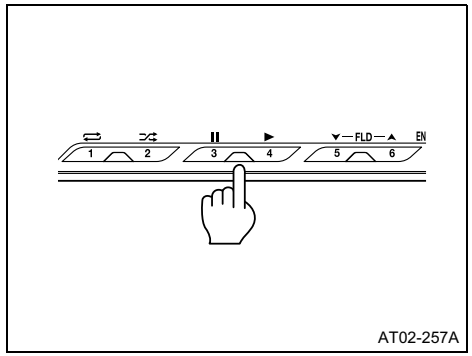

AT02-257A

4. After entering the phone number, press and hold down the "**Speed dial**" button of your choice for more than 1 second.
   "**SAVED**" appears on the display window and the Speed Dial registration is complete.

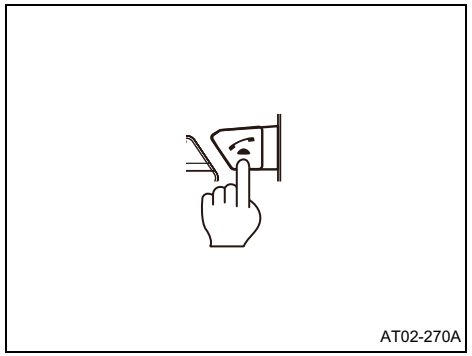

AT02-270A

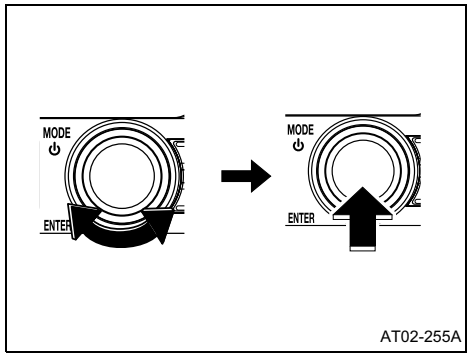


AT02-255A

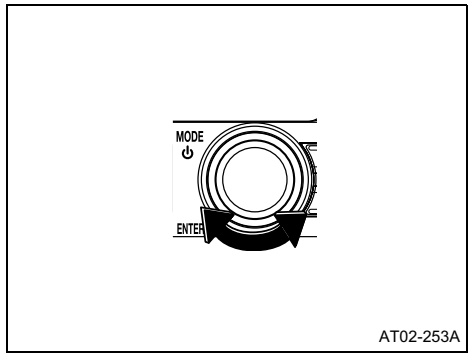


AT02-253A

**Registering a speed dial number from a history**

You can select a phone number from the incoming (missed call) or outgoing call history and register it for speed dialling.

1. Press the “**Off hook**” button.
2. Turn the “**MODE**” switch to select the phone number history of your choice, and then press the “**ENTER**” button.
3. Turn the “**MODE**” switch to select the phone number of your choice.

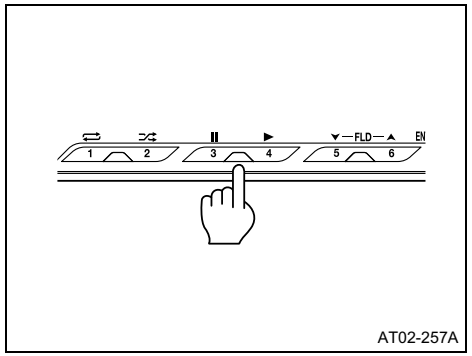

AT02-257A

4. Press and hold down the “**Speed dial**” buttons you want to store in, for more than 1 second.
“**SAVED**” appears on the display window and the Speed Dial registration is complete.

| ⚠ CAUTION |
| --- |
| **Do not register the phone number while driving. Park your vehicle in a secure location and register it.** |

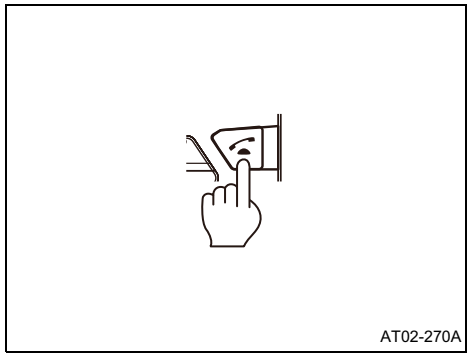
AT02-270A

**Making a call using speed dial**

1. Press the “**Off hook**” button.

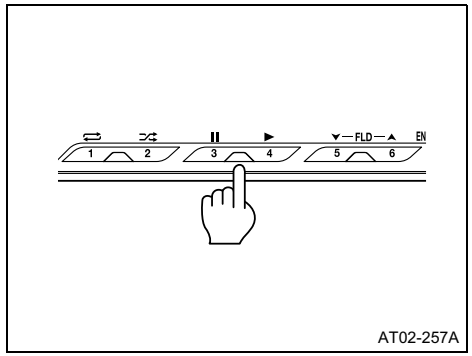

AT02-257A

2. Press the “**Speed dial**” button of your choice for less than 1 second.

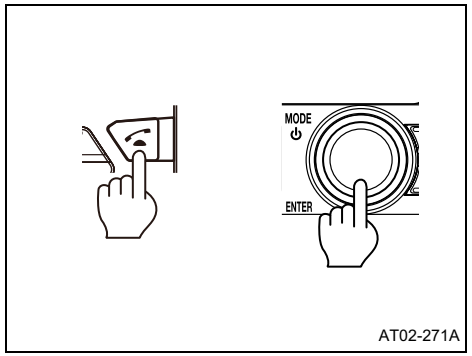

AT02-271A

3. Press “**Off hook**” button or “**ENTER**” button.
   “**CALLING**” appears on the display window and a call is made to the selected phone number.
   When the person receives the call, you can talk in handsfree mode.

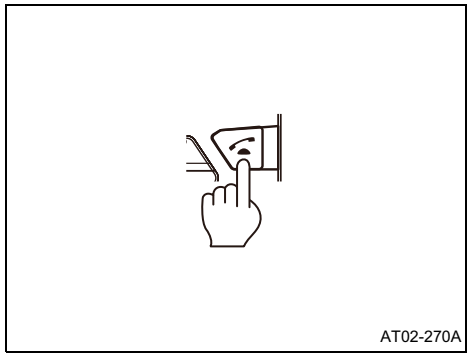
AT02-270A

**Registering a name to speed dial**

1. Press the “**Off hook**” button.

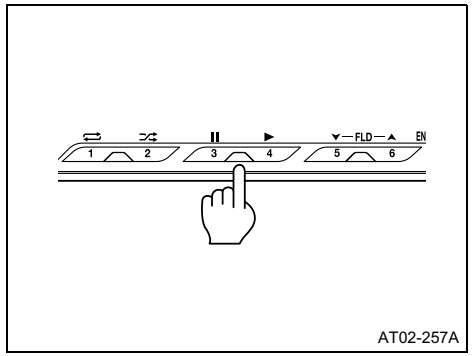

AT02-257A

2. Press the “**Speed dial**” button of your choice for less than 1 second.

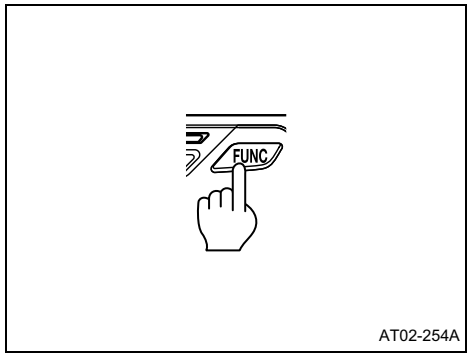

AT02-254A

3. Press the “**FUNC**” button.

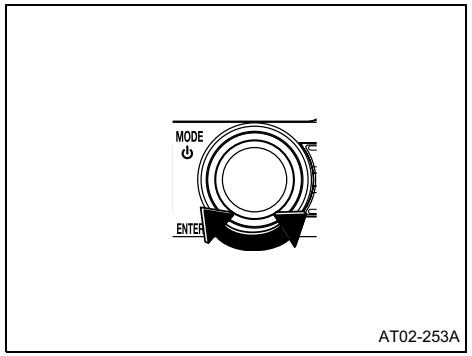

AT02-253A

4. Turn the “**MODE**” switch to select characters. You can enter characters by one digit at a time.
   Alphanumeric characters and the following symbols are available.
   '< > * + - . / \ = _ (space)
   “**Level adjust**” button(∧):
   Advance to the next digit.
   “**Level adjust**” button(∨):
   Delete the entered digit and return to the previous digit.

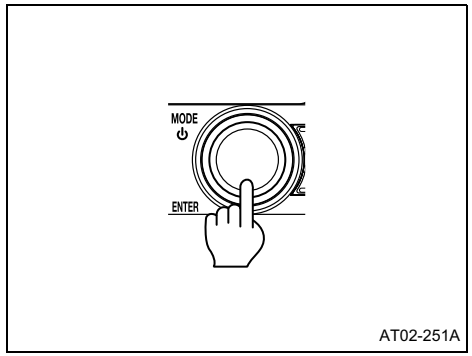

AT02-251A

5. After entering the name, press the “**ENTER**” button. “**SAVED**” appears on the display window and the name registration to the speed dial is complete.

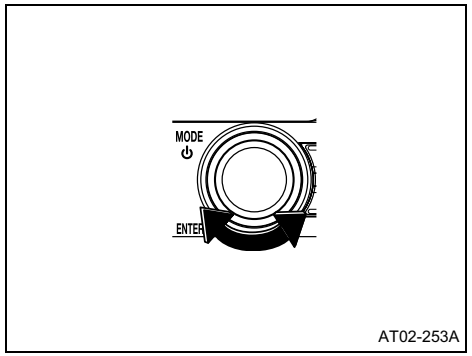

AT02-253A

**Setting the volume**

Call volume:

Turn the “**Volume adjust**” knob during a call.
Turn clockwise: Increase the volume.
Turn counterclockwise: Decrease the volume.
The adjusted volume value is saved.

Ringtone volume:

Turn the “**Volume adjust**” knob during an incoming call.
Turn clockwise: Increase the volume.
Turn counterclockwise: Decrease the volume.
The adjusted volume value is saved.

***NOTICE:***

*The volume and microphone gain setting of each mobile phone is different according to its specification.*

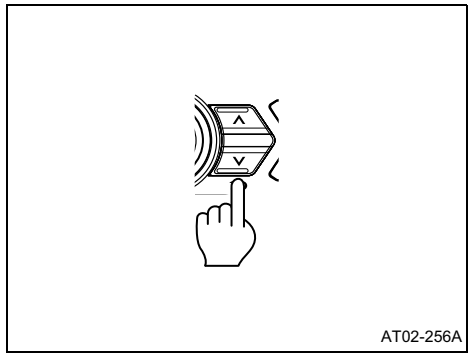
AT02-256A

**Setting the sensitivity of the built-in microphone**

If your voice is too low or difficult to hear for the person you are talking to, or there is an echo or howling, you can adjust the microphone sensitivity.

Press the “**Level adjust**” buttons during a call.

“**Level adjust**” button(∧):
Increase the sensitivity. (The sound transmission is more effective.)
“**Level adjust**” button(∨):
Decrease the sensitivity. (The sound transmission is less effective.)

The setting can be adjusted within the range of 0 to MAX (10). (Default: 5)

***NOTICE:***

*“**MIC LEVEL**” appears on the display while buttons are operated. “**MIC LEVEL**” disappears in 2 seconds after the operation is completed, and the display returns to its original state.*

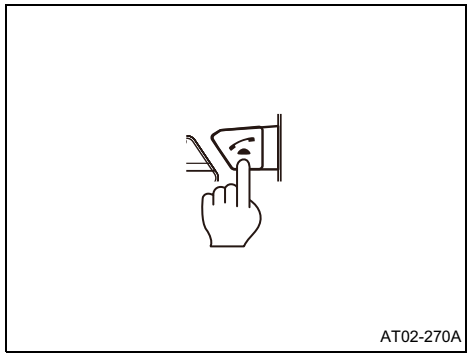
AT02-270A

**Talking on the mobile phone (Private mode)**

You can switch phone calls from this unit (handsfree mode) to the mobile phone.

Press and hold down the “**Off hook**” button for more than 1 second during a call.

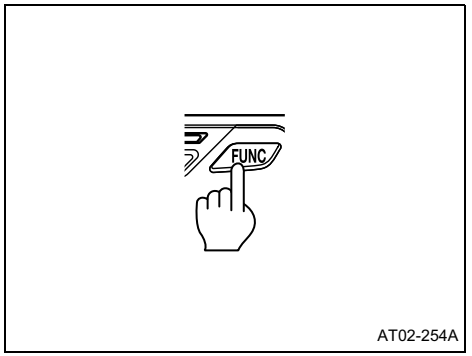

AT02-254A

**Entering tone numbers**

1. Press the “**FUNC**” button during a call.

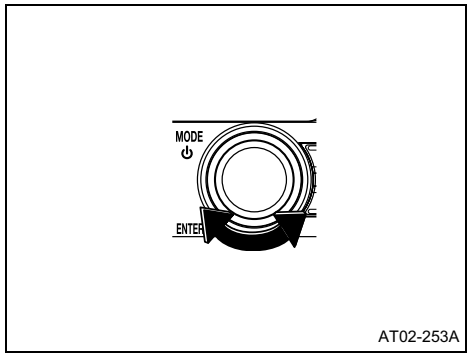

AT02-253A

2. Turn the "**MODE**" switch to select the tone number. You can enter phone numbers by one digit at a time.
   Numeric character (0-9) and symbols (*, **#**, +) are available. You can use the symbols (+) only for the first digit.

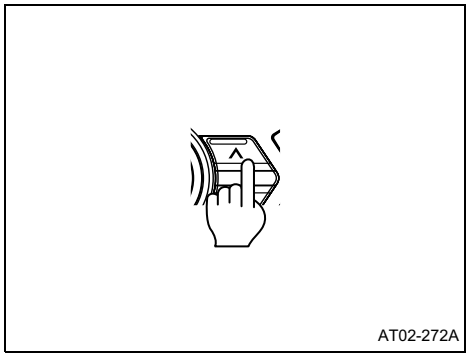
AT02-272A

3. Press the "**Level adjust**" button(∧).
   The selected tone numbers are transmitted. You will move on to the next step and select the tone numbers again if necessary.

**Talking during call waiting**

When the display window indicates the phone call in progress, the call waiting feature enables you to receive and answer a second phone call while placing the first call on hold.

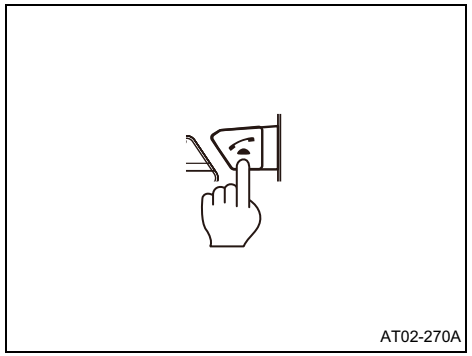
AT02-270A

Press the “**Off hook**” button when the ring tone starts during a call.

- While placing the phone call in progress on hold, you will be connected to the second caller.
- Press the “**On hook**” button when you wish to turn off the Call Waiting feature.
- When the Call Waiting feature is turned off, you will be connected to the first caller on hold.
- Pressing the “**Off hook**” button again enables you to switch between callers on Call Waiting.

***NOTICE:***

*This function is available only when your phone is compatible with the call waiting feature.*

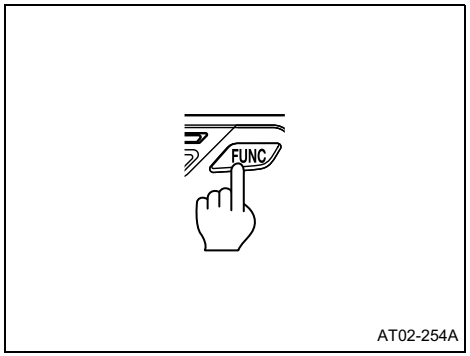

AT02-254A

**Displaying the registered mobile phone**

1. Press the “**FUNC**” button.

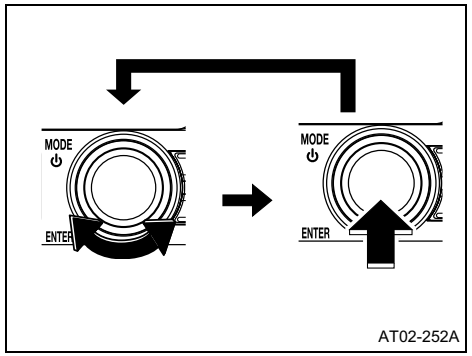

AT02-252A

2. Turn the “**MODE**” switch to select “**BLUETOOTH**”, and then press the “**ENTER**” button.
3. Turn the “**MODE**” switch to select “**LIST PHONE**”, and then press the “**ENTER**” button.
4. Turn the “**MODE**” switch to select mobile phone name, and then press the “**ENTER**” button.
5. Turn the “**MODE**” switch to select the display item of your choice, and then press the “**ENTER**” button.

- SELECT: Connect the registered mobile phone.
  “**SEARCHING**” appears n the display window.
- DISCONNECT: Disconnect the registered mobile phone. When “**DISCONNECT?**” appears on the display window, press the “**ENTER**” button.
- DELETE: Delete the registered mobile phone.
  When “**DELETE?**” appears on the display window, press the “**ENTER**” button.

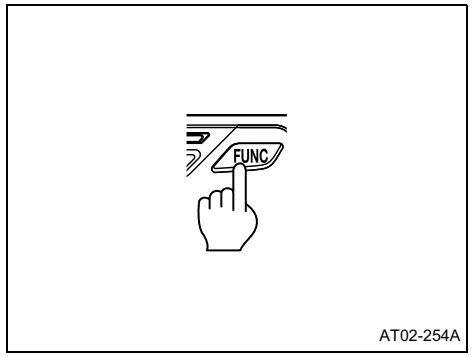

AT02-254A

**Adjusting the handsfree volume**

1. Press the “**FUNC**” button.

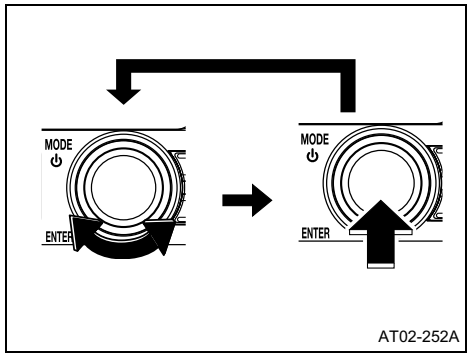

AT02-252A

2. Turn the “**MODE**” switch to select “**BLUETOOTH**”, and then press the “**ENTER**” button.
3. Turn the “**MODE**” switch to select “**HF SOUND**”, and then press the “**ENTER**” button.
4. Turn “**MODE**” switch to select an adjustment item, and then press “**ENTER**” button.
   CALL VOLUME: Adjust the call volume.
   RINGTONE: Adjust the ringtone volume.

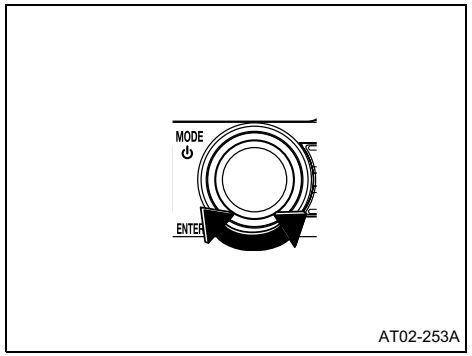

AT02-253A

5. Turn the “**Volume adjust**” knob.
   Turn clockwise: Increase the volume.
   Turn counterclockwise: Decrease the volume. The adjusted volume value is saved.
   To adjust the volume during an incoming call or during a call, see “Setting the volume” on page 2-206.

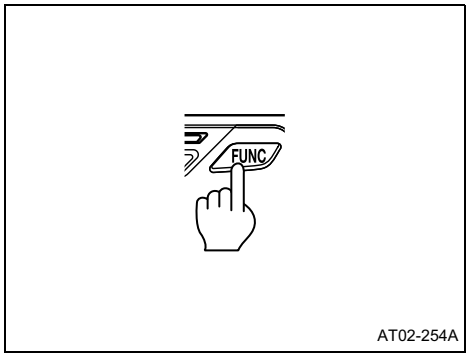

AT02-254A

**Setting the phonebook auto transfer**

1. Press the “**FUNC**” button.

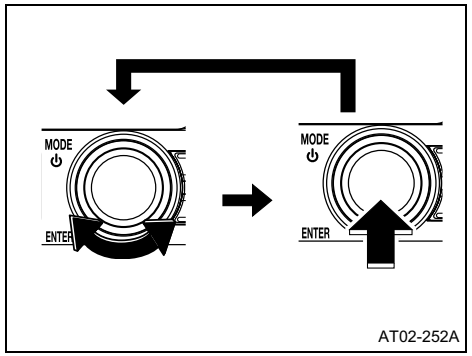

AT02-252A

2. Turn the “**MODE**” switch to select “**BLUETOOTH**”, and then press the “**ENTER**” button.
3. Turn the “**MODE**” switch to select “**A.TRANSFER**”, and then press the “**ENTER**” button.
4. Turn the “**MODE**” switch to switch ON/OFF, and then press the “**ENTER**” button.
   TRANSFER ON: Turn on the phonebook transfer.
   TRANSFER OFF: Turn off the phonebook transfer.

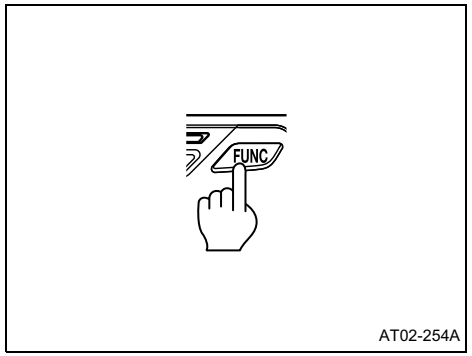

AT02-254A

**Deleting a phonebook**

1. Press the “**FUNC**” button.

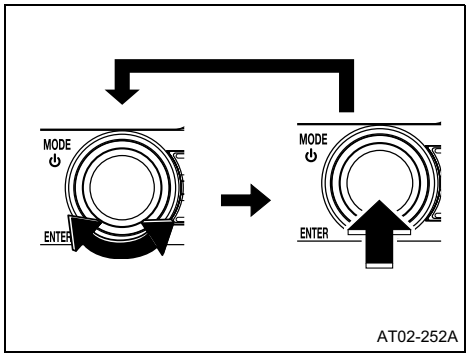

AT02-252A

2. Turn the “**MODE**” switch to select “**BLUETOOTH**”, and then press the “**ENTER**” button.
3. Turn the “**MODE**” switch to select “**DEL P.BOOK**”, and then press the “**ENTER**” button.

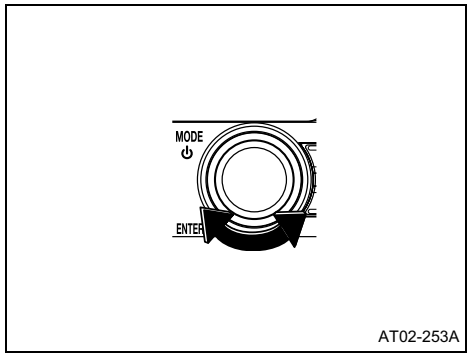


4. When “**DELETE?**” appears on the display window, press “**ENTER**” button.

## USING THE AUDIO SYSTEM

### CERTIFICATION

FCC ID: BABFT0093A

CAUTION: Radio Frequency Radiation Exposure
This equipment complies with FCC radiation exposure limits set forth for uncontrolled equipment and meets the FCC radio frequency (RF) Exposure Guidelines. This equipment has very low levels of RF energy that it deemed to comply without maximum permissive exposure evaluation (MPE). But it is desirable that it should be installed and operated with at least 20cm and more between the radiator and person’s body in normal use position.

Co-location: This transmitter must not be co-located or operated in conjunction with any other antenna or transmitter.

This device complies with part 15 of the FCC Rules. Operation is subject to the following two conditions: (1) This device may not cause harmful interference, and (2) this device must accept any interference received, including interference that may cause undesired operation.

FCC WARNING
Changes or modifications not expressly approved by the party responsible for compliance could void the user’s authority to operate the equipment.

IC: 2024B-FT0093A

This device complies with Industry Canada's licence-exempt RSSs. Operation is subject to the following two conditions:
(1) This device may not cause interference; and
(2) This device must accept any interference, including interference that may cause undesired operation of the device.

CAUTION: Radio Frequency Radiation Exposure

This equipment complies with IC radiation exposure limits set forth for uncontrolled equipment and meets RSS-102 of the IC radio frequency (RF) Exposure rules.
This equipment has very low levels of RF energy that it deemed to comply without maximum permissive exposure evaluation (MPE). But it is desirable that it should be installed and operated with at least 20cm and more between the radiator and person's body (excluding extremities: hands, wrists, feet and ankles).

Le présent appareil est conforme aux CNR d'Industrie Canada applicables aux appareils radio exempts de licence. L'exploitation est autorisée aux deux conditions suivantes :

(1) l'appareil ne doit pas produire de brouillage;

(2) l'utilisateur de l'appareil doit accepter tout brouillage radioélectrique subi, même si le brouillage est susceptible d'en compromettre le fonctionnement.

ATTENTION: l'exposition aux rayonnements radiofréquence
- Cet équipement se conforme aux limites d'exposition aux radiations établies par Industrie Canada pour un environnement non contrôlé ainsi qu'aux directives d'exposition aux fréquences radioélectriques (RF) émises par Industrie Canada dans la norme CNR-102. Cet équipement émet un niveau d'énergie RF faible à un point tel qu'il se conforme sans devoir effectuer d'évaluation d'exposition maximum admissible (EMA). Lorsque l'équipement est utilisé, il est toutefois souhaitable de laisser au moins 20cm entre l'antenne et le corps (à l'exception des extrémités : mains, poignets, pieds et chevilles).

**RADIO**

Usually, a problem with radio reception does not mean there is a problem with your radio - it is just the normal result of conditions outside the vehicle.

For example, nearby buildings and terrain can interfere with FM reception. Power lines or telephone wires can interfere with AM signals.

And of course, radio signals have a limited range. The farther you are from a station, the weaker its signal will be. In addition, reception conditions change constantly as your vehicle moves.

Here are some common reception problems that probably do not indicate a problem with your radio.

**FM Transmissions**

Fading and drifting stations - Generally, the effective range of FM is about 40 km (25 miles). Once outside this range, you may notice fading and drifting, which increase with the distance from the radio transmitter. They are often accompanied by distortion.

Multi-path - FM signals are reflective, making it possible for two signals to reach your antenna at the same time. If this happens, the signals will cancel each other out, causing a momentary flutter or loss of reception.

Static and fluttering - These occur when signals are blocked by buildings, trees, or other large objects. Increasing the bass level may reduce static and fluttering.

Station swapping - If the FM signal you are listening to is interrupted or weakened, and there is another strong station nearby on the FM band, your radio may tune in the second station until the original signal can be picked up again.

**DISC**

When it is cold or when it is raining, the car windows will fog up and cause dew (water drops) to form in the vehicle compartment (condensation). When this happens, the sound will jump, and playback will stop. Ventilate the vehicle compartment and dehumidify before resuming use.

Sounds may jump due to violent vibrations when the car is traveling across harsh roads.

**HINT:**

- **Never insert foreign objects into the disc insertion slot.**
- **Do not insert a wet disc into the player.**
- **This player uses an invisible laser beam which could cause hazardous radiation exposure if directed outside the player. Be sure to operate the player correctly.**

**Usable discs**

See page “Usable disc” on pages 2-135 to 2-140.

**MP3/WMA FILES**

MP3 (MPEG Audio Layer III) is a standard format for audio compression technology. By using MP3, a file can be compressed to one-tenth the size of the original.

WMA (Windows Media™ Audio) is a format for audio compression technology. WMA files can be compressed to a size smaller than MP3 files.

This deck has limitations on MP3/WMA file standards and recorded media and formats that can be used.

**Playable MP3 file standards**

Supported standards:
MPEG-1 Audio Layer III,
MPEG-2 Audio Layer III

Supported sampling frequencies:
MPEG-1: 32, 44.1, 48 (kHz)
MPEG-2: 16, 22.05, 24 (kHz)

Supported bit rate:
MPEG1: 32, 40, 48, 56, 64, 80, 96, 112, 128, 160, 192, 224, 256, 320 (kbps)
MPEG2: 8, 16, 24, 32, 40, 48, 56, 64, 80, 96, 112, 128, 160 (kbps)

Variable bit rate (VBR) is supported.

Does not support free format.

Digital Rights Management (DRM) is not supported.
Supported channel modes: stereo, joint stereo, dual channel, monaural

**Playable WMA file standards**

Supported standards:
WMA Ver. 7, WMA Ver. 8, WMA Ver. 9

Supported sampling frequencies:
32, 44.1, 48 (kHz)

Supported bit rates:
Ver. 7, 8: CBR 48, 64, 80, 96, 128, 160, 192 (kbps)
Ver. 9 (9.1/9.2): CBR 48, 64, 80, 96, 128, 160, 192, 256, 320 (kbps)
Only compatible with 2-channel playback

Variable bit rate (VBR) is supported.

Lossless compression is not supported.

**ID3 Tag/WMA Tag**

MP3/WMA files have an "**ID3 Tag/WMA Tag**" that allows the input of information so that data such as song title and artist can be saved.

This deck supports ID3 Ver. 1.0, 1.1, 2.2, 2.3 and WMA tags.

**Media**

Media such as CD-R and CD-RW discs are capable of playing MP3/WMA files.

Compared to the CD-ROM media commonly used for music discs, CD-R and CD-RW discs are easily damaged in high temperature/high humidity environments and part of the CD-R and CD-RW may become incapable of playback. Fingerprints or scratches on the disc may prevent playback or cause skipping during playback. Sections of a CD-R or CD-RW may deteriorate if it is left inside a vehicle for long periods of time.

It is also recommended that CD-R and CD-RW discs be kept in a light-resistant case because the discs are vulnerable to ultra-violet light.

**Format of discs**

The format of discs to be used must be ISO9660 Level 1 or Level 2.

Control items for this standard are as follows:

- Maximum directory layers: 8 layers
- Maximum characters for folder names/ file names: 48 (including "_" and 3 letter file extension)
- Maximum number of folders: 192 (including the root folder)
- Maximum number of files per disc: 255

[Configuration example for CD supporting MP3/WMA]

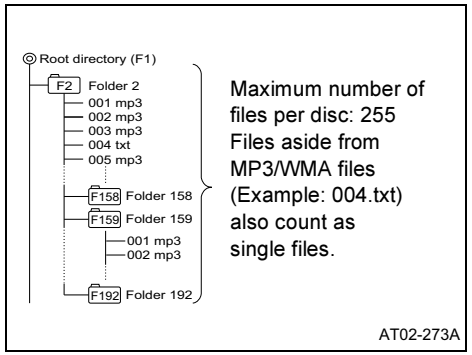


*:A root directory is counted as one folder.

**File names**

Only files with the MP3/WMA file extension "**.mp3**", "**.wma**" can be recognised as MP3/ WMA and played. Be sure to save MP3 files with the "**.mp3**" file extension. Be sure to use the "**.wma**" file extension when saving WMA files. The "**MP**" letters of the file extension will be recognised whether entered as uppercase letters or lowercase letters.

***NOTICE:***

*If the "**.mp3**" or "**.wma**" file extension is attached to a file other than an MP3/ WMA file, that file will be mistakenly recognised by the deck as an MP3/WMA file and played, resulting in loud noise output that can damage the speakers. Be sure to avoid attaching the "**.mp3**" or "**.wma**" file extension to files that are not MP3/WMA files.*

**Multi-sessions**

Does not support multi-session. When the disc used is a multi-session disc, only the first session will be played.

**Playing MP3/WMA**

When a disc with recorded MP3/WMA files is inserted, the deck first checks all the files on the disc. No sound is emitted while the deck is checking the files on the disc. It is recommended that the disc should be recorded without files other than MP3/WMA files and without unnecessary folders in order to speed up the checking of disc files by the deck.

**MP3/WMA playing time display**

It is possible that playing time will not be correct, depending on the writing condition of the MP3/WMA file.

* It is possible that playing time will not be correct when VBR Fast Up/Down is operated.

**Display order of MP3/WMA file/folder names**

Names of MP3/WMA folders and files within the same level are displayed in the following order.

1. MP3/WMA folders displayed first, by ascending order of numbers, letters.
   The files stored just below the root of the disc will be stored in the “**ROOT FOLDER**”.
2. Files displayed next, by ascending order of numbers, letters.
   It is assumed here that a disc has already been loaded into the unit.

[Example of MP3/WMA file structure]

This unit reconfigures the folders created by a user as shown below.

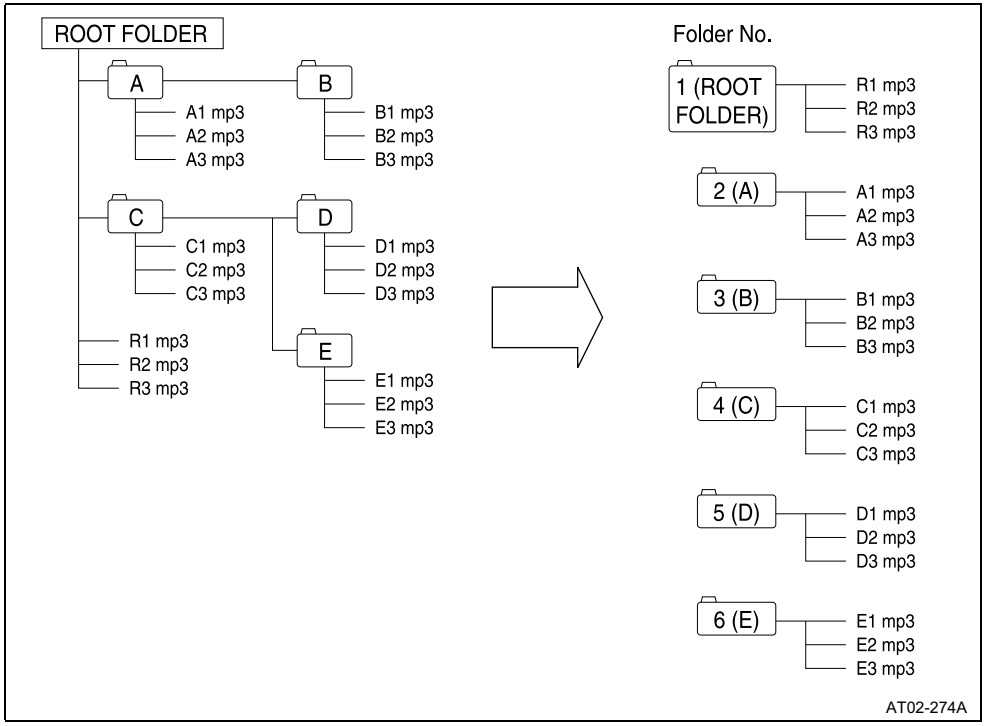


***NOTICE:***

- *The following operations are based on the example MP3/WMA file structure given above.*
- *When a disc is inserted, the CD player screen will be displayed for about a few seconds while the unit checks whether the CD is an audio CD or whether it contains MP3/WMA data.*
- *Normally, tracks in ROOT FOLDER will be played in order from the first file.*

## USB DEVICES

### USB memory standards

- Compatible file system: FAT16/32
- Audio format that is playable: MP3/WMA
- Compatibility: USB2.0 (Full speed)
- Compatible Device: USB mass storage class
- This system is not compatible with external hard drive units (pocket hard disk drives).
- Connections using HUB, etc. are not supported.

### Playable MP3 file standards

- Supported standards:
  MPEG-1 Audio Layer III,
  MPEG-2 Audio Layer III
- Supported sampling frequencies:
  MPEG-1: 32, 44.1, 48 (kHz),
  MPEG-2: 16, 22.05, 24 (kHz)
- Supported bit rate:
  MPEG1: 32, 40, 48, 56, 64, 80, 96, 112, 128, 160, 192, 224, 256, 320 (kbps)
  MPEG2: 8, 16, 24, 32, 40, 48, 56, 64, 80, 96, 112, 128, 160 (kbps)
- Variable bit rate (VBR) is supported.
- Does not support free format.
- Digital Rights Management (DRM) is not supported.
- Supported channel modes: stereo, joint stereo, dual channel, monaural

### Playable WMA file standards

- Supported standards:
  WMA Ver. 7, WMA Ver. 8, WMA Ver. 9
- Supported sampling frequencies:
  32, 44.1, 48 (kHz)
- Supported bit rates:
  Ver. 7, 8: CBR 48, 64, 80, 96, 128, 160, 192 (kbps)
  Ver. 9 (9.1/9.2): CBR 48, 64, 80, 96, 128, 160, 192, 256, 320 (kbps)
  Only compatible with 2-channel playback
- Variable bit rate (VBR) is supported.
- Lossless compression is not supported.

**ID3 Tag/WMA Tag**

- MP3/WMA files have an "**ID3 Tag/ WMA Tag**" that allows the input of information so that data such as song title and artist can be saved.
- This deck supports ID3 Ver. 1.0, 1.1, 2.2, 2.3 and WMA tags.

**Display Order of MP3/WMA file/folder names**

Names of MP3/WMA folders and files within the same level are displayed in the following order.

1. MP3/WMA folders displayed first, by ascending order of numbers, letters.
   The files stored just below the root of the disc will be stored in the "**ROOT FOLDER**".
2. Files displayed next, by ascending order of numbers, letters.
   It is assumed here that a disc has already been loaded into the unit.

[Example of MP3/WMA file structure]

This unit reconfigures the folders created by a user as shown below.

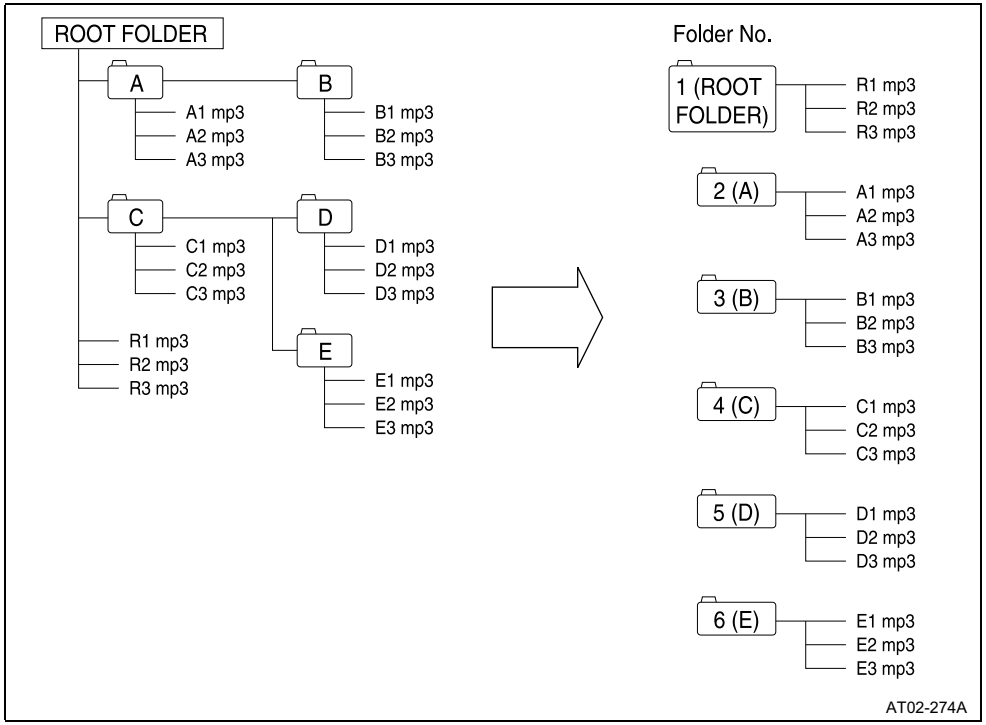


***NOTICE:***

- *The following operations are based on the example MP3/WMA file structure given above.*
- *Normally, tracks in ROOT FOLDER will be played in order from the first file.*

**iPod**

iPod and iTunes may be used with materials without copyright, or materials for which copying or playback are legally allowed for the purposes of private copying or playback. The infringement of copyright is prohibited by law.

“Made for iPod” and “**Made for iPhone**” mean that an electronic accessory has been designed to connect specifically to iPod or iPhone, respectively, and has been certified by the developer to meet Apple performance standards. Apple is not responsible for the operation of this device or its compliance with safety and regulatory standards.

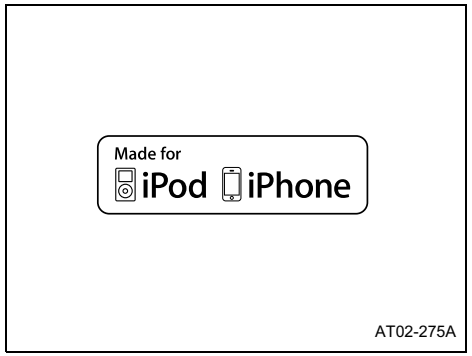

AT02-275A

iPhone, iPod, iPod classic, iPod nano, and iPod touch are trademarks of Apple Inc., registered in the U.S. and other countries.

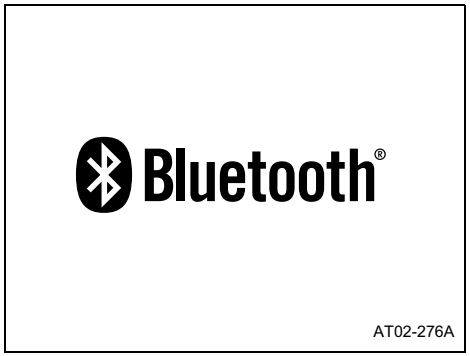

AT02-276A

**Bluetooth**

The Bluetooth® word mark and logos are registered trademarks owned by Bluetooth SIG, Inc. and any use of such marks by Fujitsu Ten Limited is under license. Other trademarks and trade names are those of their respective owners.

Compatible Bluetooth Specifications: Bluetooth Specification Ver.2.1 + EDR

Compatible Profiles:

- Hands Free Profile (HFP) Ver.1.5
- Phone Book Access Profile (PBAP) Ver. 1.1
- Advanced Audio Distribution Profile (A2DP) Ver.1.2
- Audio/Video Remote Control Profile (AVRCP) Ver.1.3

Bluetooth Handsfree/Audio operation is subject to mobile phone compatibility.

Bluetooth Handsfree performance can be influenced by mobile phone network, handset and driving condition.

The functions of the system may be partially limited depending on the model of your mobile phone.

Operation of the portable device via this unit differs depending on the specifications of the portable device.

H1-A038E01.book 227 ページ ２０１６年１０月１９日 水曜日 午後５時２６分

# SECTION 2 – 8

## OPERATION OF INSTRUMENTS AND CONTROLS

### Air conditioning system

Controls ..... 2-228
Air flow selector settings ..... 2-231
Operating tips ..... 2-231
Side vents ..... 2-234

Read the entire manual before using the vehicle. Failure to follow instructions, warnings and safety precautions could result in death, serious injury and/or property damage to the vehicle.

## Controls

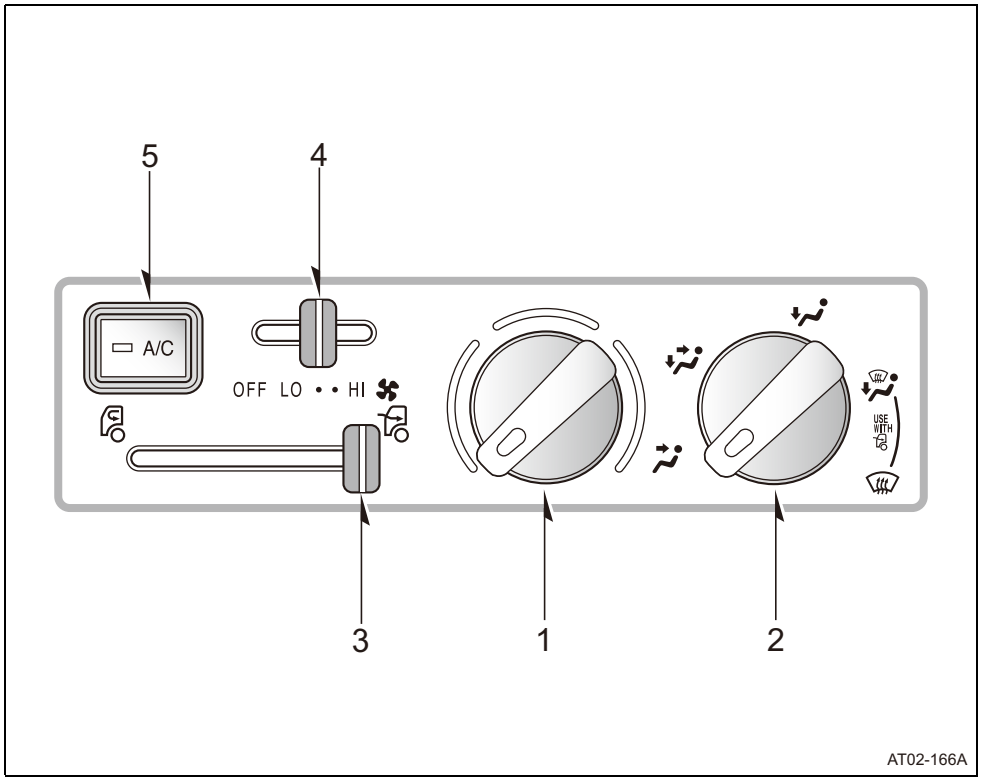


1. Temperature selector
2. Air flow selector
3. Air Intake selector
4. Fan speed selector
5. Air conditioner button

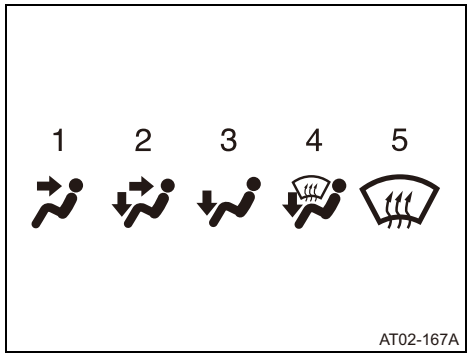


**Air flow selector**

Move the knob to select the vents used for air flow.

1. **Panel—**Air flows mainly from the instrument panel vents.
2. **Bi-level—**Air flows from both the floor vents and the instrument panel vents.
3. **Floor—**Air flows mainly from the floor vents.
4. **Floor/Windshield—**Air flows mainly from the floor vents and windshield vents.
5. **Windshield—**Air flows mainly from the windshield vents.

- For details about air flow selector settings, see “Air flow selector settings” described on page 2-231.

**HINT:**

**When the windshield (defroster) is used, Hino recommends the selector be set to FRESH to prevent the windshield from being fogged due to circulation of air in the cab.**

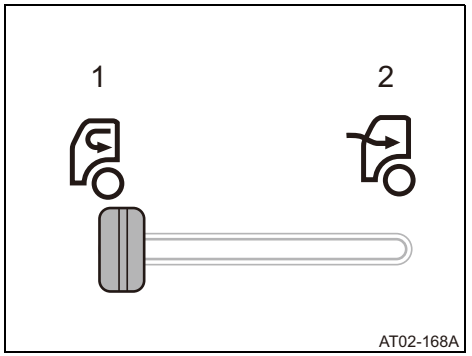


**Air intake selector**

Move the knob to select the air source.

1. **Recirculate—**Recirculates the air inside the vehicle.
2. **Fresh—**Draws outside air into the system.

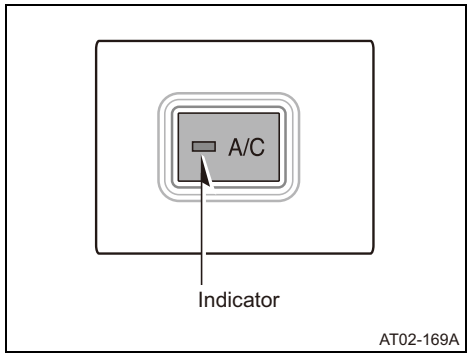


**“A/C” button (If so equipped)**

To turn the air conditioning on, push the “**A/C**” button. The “**A/C**” button indicator will come on. To turn the air conditioning off, push the button again.

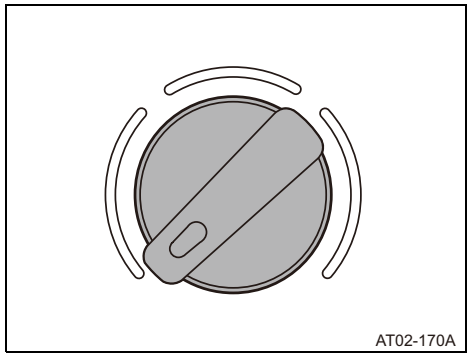


**Temperature selector**

Move the lever to adjust the temperature—to the right to warm, to the left to cool.

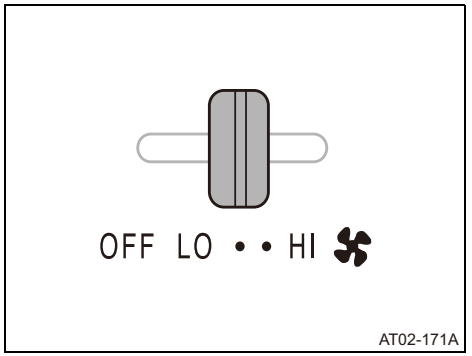


**Fan speed selector**

Move the knob to adjust the fan speed—to the right to increase, to the left to decrease.

### Air flow selector settings

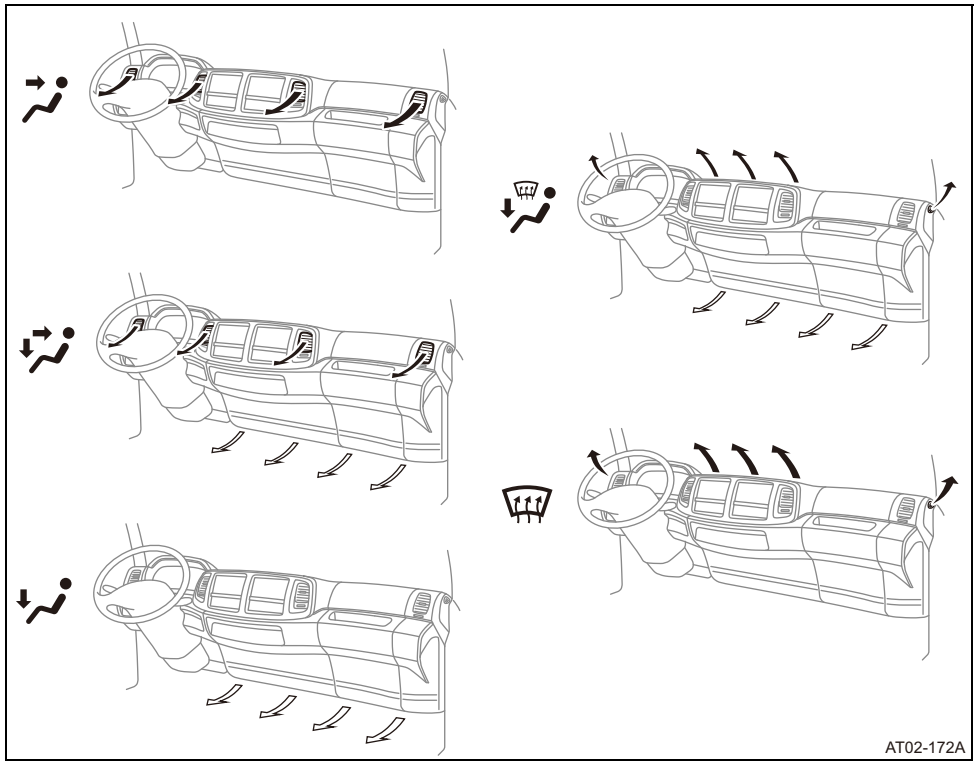


### Operating tips

- To cool off the interior of the cab after it has been warmed, drive with the windows open for a few minutes, and ventilate the hot air, allowing the air conditioning to cool the interior quickly.
- Make sure the air intake grilles in front of the windshield are not blocked or obstructed by leaves or snow or anything else.
- On humid days, be careful not to direct the cold air at the windshield to prevent the windshield from being fogged due to the difference in air temperature inside and outside of the cab.
- Keep the area under the front seats clear to allow air to circulate throughout the vehicle.
- On cold days, set the fan speed to high for a minute to help clear the intake ducts of snow or moisture to minimize windshield.

- When driving on dusty roads, close all windows. If dust thrown up by the vehicle is still drawn into the vehicle after closing the windows, it is recommended that the air intake selector be set to “**Fresh**” and the fan speed selector to any position except for “**OFF**”.
- If your vehicle follows another vehicle on a dusty road, or driving in windy and dusty conditions, it is recommended that the air intake selector be temporarily set to the “**Recirculate**” position, which will close off the outside passage and prevent outside air and dust from entering the vehicle interior.

**HEATING**

It is recommended that the controls be set as follows:

| |
|---|
| **Fan speed—**Any position except for “**OFF**” |
| **Temperature**—Towards **WARM** (red zone) |
| **Air intake—FRESH** (outside air) |
| **Air flow—FLOOR** |
| **Air conditioning—OFF** |

- For quick heating, select the air intake selector for “**Recirculate**” for a few minutes. To keep the windshield from being fogged, select “**Fresh**” after the vehicle interior has been warmed.
- Press the “**A/C**” button to the on position for dehumidified heating.
- Choose floor/windshield air flow to heat the vehicle interior while defrosting or defogging the windshield.

**COOLING**

It is recommended that the controls be set as follows:

| |
|---|
| **Fan speed—**Any setting except “**OFF**” |
| **Temperature—**Towards **COLD** (blue zone) |
| **Air intake—FRESH** (outside air) |
| **Air flow—PANEL** |
| **Air conditioning—ON** |

- For quick cooling, move the air intake selector knob to “**Recirculate**” for a few minutes.

**VENTILATION**

It is recommended that the controls be set as follows:

| |
|---|
| **Fan speed—**Any position except for the "**OFF**" position |
| **Temperature—**Towards **COLD** (blue zone) |
| **Air intake—FRESH** (outside air) |
| **Air flow—PANEL** |
| **Air conditioning—OFF** |

**DEFOGGING**

The inside of the windshield
It is recommended that the controls be set as follows:

| |
|---|
| **Fan speed—**Any position except the "**OFF**" position |
| **Temperature—**Towards **WARM** (red zone) to heat; Towards **COLD** (blue zone) to cool |
| **Air intake—FRESH** (outside air) |
| **Air flow—WINDSHIELD** |
| **Air conditioning—ON** |

**DEFROSTING**

The outside of the windshield
It is recommended that the controls be set follows:

| |
|---|
| **Fan speed—**Any setting except for the "**OFF**" position |
| **Temperature—**Towards **WARM** (red zone) |
| **Air intake—FRESH** (outside air) |
| **Air flow—WINDSHIELD** |
| **Air conditioning—OFF** |

- To heat the vehicle interior while defrosting the windshield, choose floor/windshield air flow.

### Side vents

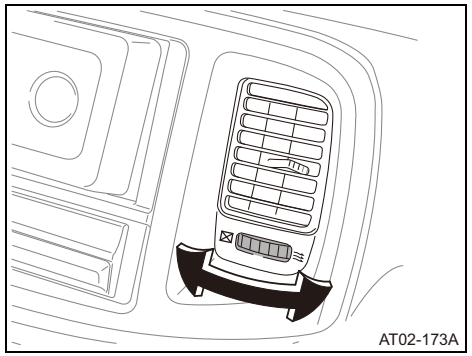


If air flow control is not satisfactory, adjust the side vents to your right or left as shown on the illustration.

H1-A038E01.book 235 ページ ２０１６年１０月１９日 水曜日 午後５時２６分

# SECTION 2 – 9

## OPERATION OF INSTRUMENTS AND CONTROLS

### Other equipment

Power outlet ..... 2-236
Cigarette lighter (If so equipped) ..... 2-239
Ashtray (If so equipped) ..... 2-239
Overhead console ..... 2-240
Center console and cup holder ..... 2-240
Cup holder (If so equipped) ..... 2-241
Door pocket ..... 2-242
Sun visor ..... 2-242

Read the entire manual before using the vehicle. Failure to follow instructions, warnings and safety precautions could result in death, serious injury and/or damage to the vehicle.

## Power outlet

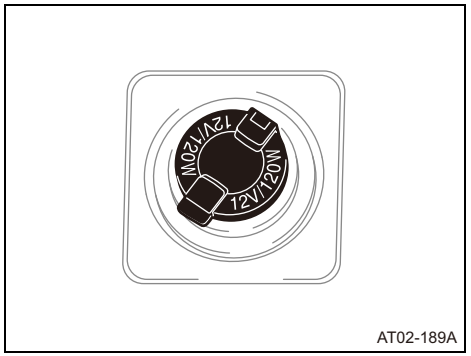


AT02-189A

The power outlet supplies 12 volts (V) of fused 10 amperes (A) power when the key is in “ACC” or “ON” position.

**⚠ WARNING**

- **The maximum allowable load on the power outlet is 10A (12V-120W). Never overload the power outlet to avoid wiring being overheated. Otherwise, overheated wiring may cause a fire.**
- **Use the proper fuse for the power outlet in accordance with this manual to avoid a fire caused by overheated wiring.**
- **The power outlet may be hot during or immediately after use. Never touch the inside of the power outlet to avoid a burn injury.**

**Using a power outlet**

**Observe the following precautions to reduce the risk of injury.**

- **Use of the power outlet when it is wet with drinks or snow may result in electrical shocks and is extremely dangerous. The power outlet must be thoroughly dried before use.**
- **Do not allow children to use or play with the power outlet.**
- **Be careful not to get any part of your body caught in the power outlet lid.**
- **When using electrical appliances, strictly follow any cautions and notices written on their labels and in the manufacturers’ instruction manuals.**

- Do not modify, disassemble or repair the power outlet or its inverter, in any way.
  Doing so may result in unexpected malfunctions or accidents, which could cause serious damage or injuries. Contact your Hino dealer for any necessary repairs.

To prevent injuries and accidents, securely fix all electric appliances before use and do not use any appliances that may do any of the following:

- Distract the driver while driving, or hamper safe driving.
- Result in a fire or burn injuries due to the appliance rolling, falling or overheating while driving.
- Emit steam, while the windows of the cabin are closed.

To prevent unexpected accidents, such as electric shocks, do not perform any of the following.

- Using the power outlet for electric heaters while sleeping.
- Contaminating the power outlet with liquid substances or mud.
- Handling electrical appliance plugs at the power outlet with wet hands or feet.
- Inserting foreign objects into the power outlet.
- Using malfunctioning electric appliances.
- Inserting inappropriate or badly fitting plugs into the power outlet.

**⚠ CAUTION**

To avoid damaging the power outlet and the plug

- Close the power outlet lid when not in use.
- Foreign objects or liquids that enter the power outlet may cause a short circuit.
- Do not use plug adaptors to connect too many plugs to the power outlet.
- After inserting a plug, gently close the power outlet lid.

To prevent the fuse from being blown

Do not use a 12V appliance that requires more than maximum capacity.

**Appliances that may not operate properly**

The following 12V appliances may not operate even if their power consumption is under maximum capacity.

- Appliances with high initial peak wattage
- Measuring devices that process precise data
- Other appliances that require an extremely stable power supply

**To prevent the battery from being discharged**

Turn off all the vehicle's electrical equipment and accessories, such as the headlights and air conditioning, when electrical appliances that consume in excess of 120W are used continuously for long periods of time.

- Use of electrical appliances while the engine is not running, the battery can be discharged.

**To prevent any damage caused by heat**

Do not use any electrical appliances that give off intense heat such as toasters, in any locations including the internal or external trim, seats and deck.

- Do not use any electrical appliances, which are easily affected by vibration or heat, inside the vehicle.
  Vibration while driving, or the heat of the sun while parking, may result in damage to those electrical appliances.

**If any electrical appliances are to be used with driving**

Securely fasten both the appliances and their cables to prevent them from falling or getting caught any of the power train components.

**If the power outlet is loose when an electrical appliance plug is connected**

Never use the power outlet and contact your Hino dealer for repair or replacement.

**If the power outlet gets dirty**

Turn the main switch off and use a soft, clean cloth to wipe it gently.
Do not use any cleansing materials, such as organic solvents, wax, or compound cleaners, as these may damage the power outlet or cause it to malfunction.

### Cigarette lighter (If so equipped)

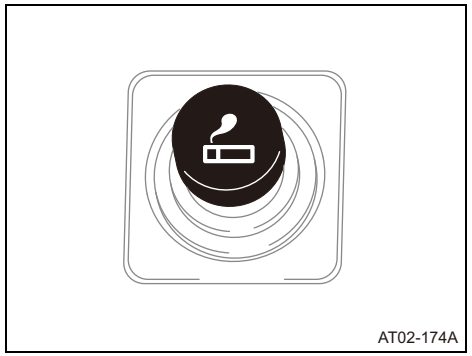


To operate the cigarette lighter, push the cigarette lighter in. It will pop out in about 15 seconds when it is ready to be used. Always wait a few minutes before using the lighter again.

### Ashtray (If so equipped)

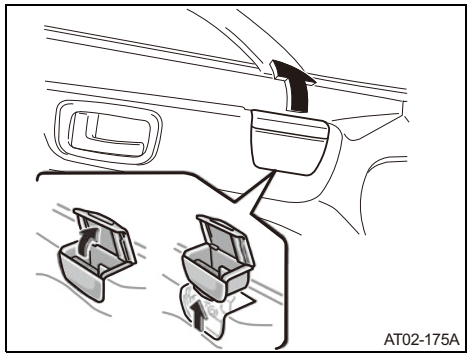


After using the ashtray, lower the cover and close completely. To remove the ashtray, pull it upward as shown in the illustration.

**⚠ WARNING**

**When finished with your cigarette, be sure to thoroughly extinguish it in the ashtray to prevent other cigarette butts from catching fire. To reduce the chance of injury in case of an accident or sudden stop while driving, always lower the top and close the ashtray completely after using.**

## Overhead console

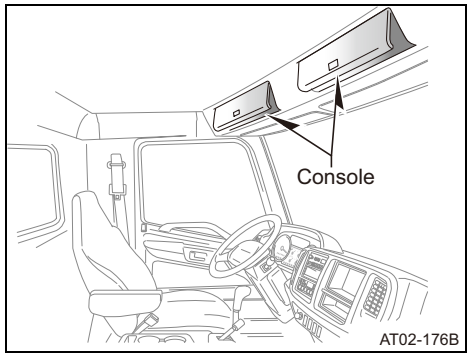


**⚠ WARNING**

**Never place heavy or unstable objects in overhead consoles and be sure to keep the cover of overhead console closed at all times when driving. Objects may fall when the vehicle is moving. Falling objects may strike occupants, causing injury, and may interfere with safe driving resulting in death or serious injury. Falling objects may also damage the hinge or locking mechanism of the overhead console.**

## Center console and cup holder

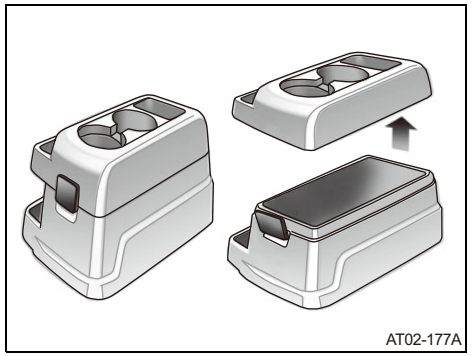


**⚠ WARNING**

**Improper use of cup holders can cause accident which result in injuries.**

**While drinking, during sudden braking, or during an accident, hot beverages in a cup holder may be spilled and cause scalding.**

**Do not put hot beverages into the cup holder while driving.**

**Bottles and other objects can fall into the driver's footwell and obstruct the pedals while driving.**

**Make sure that bottles cannot fall into the driver's footwell during driving to avoid interfering with the pedals.**

**Never place anything other than cup(s) or drink-can(s) containing cold drinks in the cup holder, as such items may be thrown about the cab and possibly injure people in the vehicle during sudden braking or in an accident.**

**To reduce the chance of injury in case of an accident or sudden stop while driving, keep the cup holder closed when it is not in use.**

***NOTICE:***

- *Never put open beverages in the cup holder when the vehicle is moving. Beverages can spill and damage the vehicle, including the vehicle's electrical system.*
- *Keep the cover of the console closed while driving. If the console is open while driving, the console locking hook may be damages.*

## Cup holder (If so equipped)

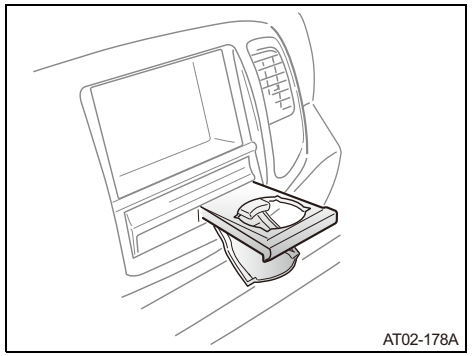


**Type A**

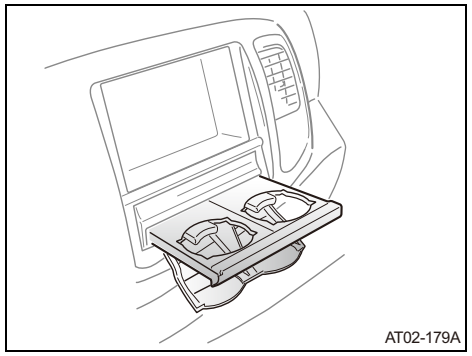


**Type B**

To use the cup holder, pull it out completely.

## Door pocket

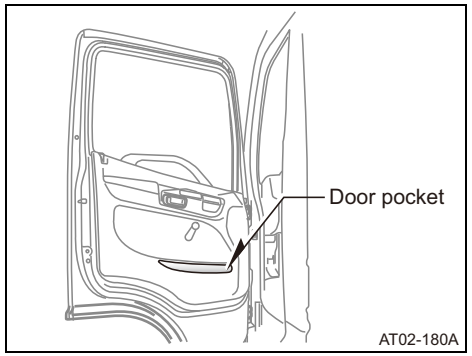


## Sun visor

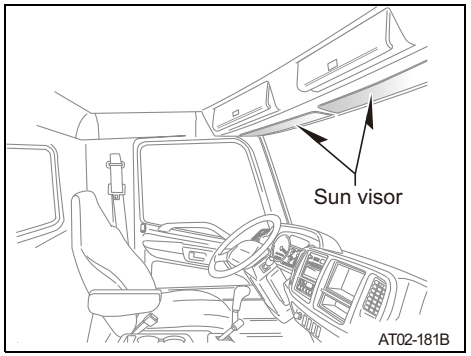


**⚠ WARNING**

**Sun visors can reduce the driver's visibility.**

**When not being used to block the sun's glare, always keep the sun visor forward and latched.**

The sun visor may help to protect your eyes from the sun's glare. To adjust, flip the sun visor down towards the windshield. Change the angle of the sun visor to your desired position. It can also be used as a side visor by lifting it and swinging it against the side door window.

***NOTICE:***

*When not using the sun visor as a side visor, keep it forward and latched.*

H1-A038E01.book 1 ページ ２０１６年１０月１９日 水曜日 午後５時２６分

# SECTION 3

## STARTING AND DRIVING YOUR HINO VEHICLE

Daily inspection ..... 3-3
New vehicle break-in ..... 3-3
How to load cargo ..... 3-3
Air suspension dump switch (If so equipped) ..... 3-6
Before starting the vehicle ..... 3-8
How to start the engine ..... 3-8
Warm up system ..... 3-9
Handling in cold weather ..... 3-10
Before driving the vehicle ..... 3-14
Driving ..... 3-14
DEF - SCR system ..... 3-20
Diesel Particulate active Reduction system (DPR) ..... 3-35
Differential lock (If so equipped) ..... 3-40

Read the entire manual before using the vehicle. Failure to follow instructions, warnings and safety precautions could result in death, serious injury and/or damage to the vehicle.

H1-A038E01.book 2 ページ ２０１６年１０月１９日 水曜日 午後５時２６分

Economy running switch .....3-41
Cruise control .....3-41
Horn .....3-46
After driving .....3-47
Starting the engine after long vehicle storage .....3-49

## Daily inspection

**⚠ WARNING**

**Daily inspection should be performed by the driver before or after the day's operation in order to assure safe driving and prevent problems on the road.**

**Be sure that all necessary repairs and adjustments have been completed before starting to drive.**

**For detailed information about the maintenance of the vehicle, see "Section 6-1".**

**Failure to keep your Hino vehicle in good repair could cause an accident resulting in serious injury, death, or property damage.**

## New vehicle break-in

Regular and good vehicle care, and employing proper break-in procedures are important for the proper operation of your vehicle, the following procedures should always be used:

- Allow the engine to warm up before beginning to operate your vehicle.
- Use the lowest gear when you start a loaded vehicle and when you go up hill to avoid overloading the engine.
- Full-throttle starting and harsh application of the brakes should be avoided.
- Be sure to have your vehicle serviced when the odometer reading reaches 2,500 miles (4,000 km), 5,000 miles (8,000 km) and 6,000 miles (10,000 km) in accordance with "Table 1: Recommended maintenance service" on page 6-43.

## How to load cargo

**⚠ WARNING**

- **Do not load cargo in excess of the maximum load capacity.**
  **Overloading can cause the vehicle to overturn during turning of the vehicle, resulting in serious injury, death and/or property damage.**
- **Do not load cargo in incorrectly Incorrect loading can cause instability, accelerated wear and tear, insufficient braking, and other problems, which may result in serious injury, death, or property damage in an accident.**

***NOTICE:***

*Hino recommends following cargo loading procedures to minimize the danger of sliding when braking or turning.*

**, circle with slash on pages 3-4 and 3-5 means “Do not” load your vehicle in the manner shown in the drawing. Use the “Recommended loading”.**

| Item | Recommended loading | Improper loading |
|---|---|---|
| 1. Be sure to load the long objects so that they may not be projected beyond the load platform.<br>Avoid 2-point support on the cab guard and the rear end. |  |  <br>  |
| 2. When load supports are used, use a sufficient number of supports and position them properly. |  | 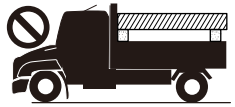 |
| 3. High and tiled loading must be avoided because the cargo may collapse when the vehicle is being turned. |  |  |
| 4. Fix the cargo securely to the platform of the vehicle. | 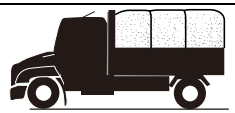 |  |

| Item | Recommended loading | Improper loading |
|---|---|---|
| Load your vehicle evenly. If not possible, avoid placing the cargo in a place other than the center of the load platform. |  |  |
| |  |  |
| | | 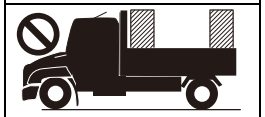 |
| |  | 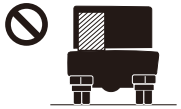 |

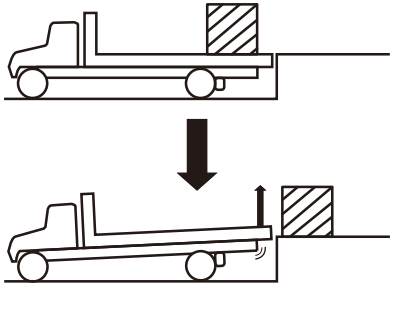


**Precautions for loading and unloading a vehicle equipped with air springs (If so equipped).**

When heavy cargo is unloaded from the vehicle, the rear of the load-carrying platform may rise temporarily. This is a result of an imbalance between the supporting forces of the air springs and the load. After a few seconds, the load-carrying platform will return to its normal position as a result of the vehicle height adjusting mechanism.

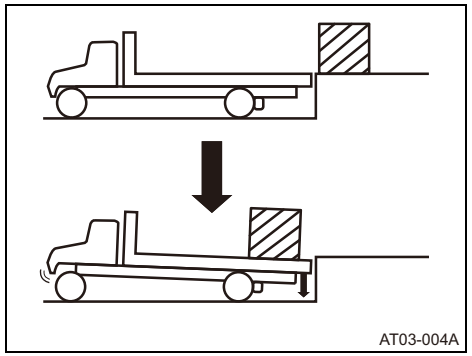
AT03-004A

When heavy cargo is loaded onto the vehicle, the rear of the load-carrying platform may lower temporarily. This is a result of an imbalance between the supporting forces of the air springs and the load. After a few seconds, the load-carrying platform will return to its normal position as a result of the vehicle height adjusting mechanism.

## Air suspension dump switch (If so equipped)

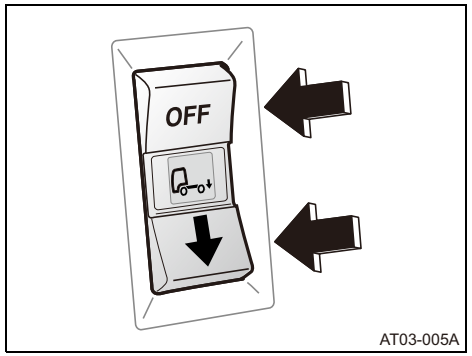

AT03-005A

**The air suspension dump switch can be used to assist in loading and unloading the vehicle. Operating the switch lowers the height of the rear end by means of compressed air.**

**⚠ WARNING**

**Always follow the instructions below before operating the air suspension dump switch. Use of the switch may cause the vehicle to move back and forth which could result in serious injury or death to a person who comes in contact with the moving vehicle.**

**BEFORE OPERATING THE AIR SUSPENSION DUMP SWITCH MAKE THE FOLLOWING PREPARATIONS**

1. Park the vehicle on a level place and solid surface.
2. Apply the parking brake securely and place the gearshift lever in neutral position (for manual transmission) or place the selector lever in "**P**" position (automatic transmission with "**P**" position) or "**N**" position (automatic transmission without "**P**" position).
3. Make sure that there are no persons and obstacles around and/or under the vehicle.
4. Make sure that the air pressure gauge reads the following pressures:

**Lift up:** 130—140 lb/in$^2$ (9.0—10.0 kgf/cm$^2$)

**Down:** More than 87 lb/in$^2$ (6.1 kgf/cm$^2$)

Always keep the engine running while using the air suspension dump switch to avoid losing air pressure.

**HOW TO OPERATE THE AIR SUSPENSION DUMP SWITCH**

- Push the "↓" switch to lower the height of the rear-end of the vehicle and height control indicator light "" turns on.
  The lower height will be kept when the starter switch is "**ACC**" or "**LOCK**" position.
- Push the "**OFF**" switch to restore the vehicle to its original height and height control indicator light "" turns off.

The air suspension dump switch will be turned off automatically. and the height of the rear-end of the vehicle restored to its original position in the following circumstances:

- When the parking brake is released.

**⚠ WARNING**

- **When vehicle is parked for a long time, air pressure of air suspension system may be low and rear-end height may change.**
- **When starter switch is "ON" or engine start, rear-end height may change by air supply for air suspension system.**

**HINT:**

**The information of height control indicator may not accord with vehicle height when air pressure of air suspension system is low.**

## Before starting the vehicle

1. Check the area around the vehicle for obstacles and flammable items and remove them before entering the cab of the vehicle.
2. Adjust the seat position, seatback angle and steering wheel angle.
3. Adjust the inside and outside rear view mirrors.
4. Lock all doors.
5. The driver and all passengers should fasten and adjust seat belts.

## How to start the engine

**⚠ CAUTION**

**After the engine has started, never return the key to the "START" position. This could cause damage to the starter motor and/ or engine.**

**Operation for starting the engine depends on the model of the transmission of your vehicle.**

**See section 2-6, beginning at page 2-77, carefully before driving your vehicle.**

***NOTICE:***

*Do not put the engine in high speed rotation immediately after starting the engine. If the turbocharger is driven in insufficient lubricated condition, which is inevitable immediately after starting the engine, failure such as bearing seizing may be caused.*

### Cold weather conditions

**Pre-heating of the vehicle**

**Engine warm-up is necessary for the protection of the engine when you start up the engine in the cold weather.**

1. When the water temperature is 32°F (0°C) or lower, place the gearshift lever in neutral position for manual transmissions and place the selector lever in "**N**" or "**P**" position for the automatic transmissions and turn the key to the "**ON**" position. The indicator light ( ) turns on for five seconds and pre-heating is carried out.
2. Within 3 seconds after the indicator light turns off, depress the clutch pedal (manual transmission only) and accelerator pedal, turn the key switch to the "**START**" position and start the engine.

***NOTICE:***

- *Turn the key to the "**ON**" position before depressing the accelerator pedal, when the key is at "**LOCK**" or "**ACC**" position. Otherwise, the pre-heater system is not activated.*
- *When the engine does not start on the first attempt, wait approximately 30 seconds before trying again.*
- *Do not keep the key engaged for more than 15 seconds at a time.*

## Warm up system

This system is used when you want the heater and the defroster to work as soon as possible after starting the engine in cold weather, or you want to increase efficiency of heater while the vehicle is stopped for a long period of time.

**⚠ CAUTION**

**Never use the warm-up system in a garage, indoors or in any insufficiently ventilated location. The vehicle emits exhaust gas harmful to human body when the warm-up system is activated.**

**How to turn on the warm up system:**

1. Apply the parking brake firmly and place the gearshift lever in neutral position (for manual transmission) or place the selector lever in "**P**" position (automatic transmission with "**P**" position) or "**N**" position (automatic transmission without "**P**" position).

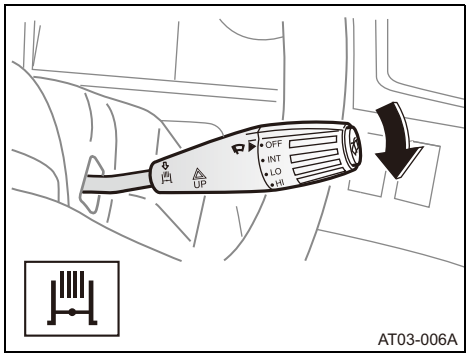


2. Start the engine and lower the exhaust brake switch lever.

**The warm up system will not operate in the following circumstances;**

- When the clutch pedal is depressed.
- When shifting the gearshift lever from the neutral position to any other position.

## Handling in cold weather

**Starting the engine in cold weather below 0°F (-18°C)**

**⚠ WARNING**

**Never use ether to assist with starting. Ether is highly toxic, and is also flammable and may damage the engine.**

**Use of three batteries**

Installing an additional battery and using three batteries in total to start the engine.

**⚠ WARNING**

**Never connect positive and negative terminals to each other. When removing the battery ground at the time of inspection, maintenance, or for any other reason, ground cables must be removed.**

**Tightening torque of the fitting nuts of the battery is as follows:**

N·m (lbf·ft, kgf·cm)

5.9—9.8 (4.4—7.2, 60—100)

- This vehicle has a 12 volt, negative ground system. When installing three batteries in the vehicle, connect the three positive terminals of the batteries to the positive battery cable and the three negative terminals of the batteries to the ground cable as shown in the illustration.

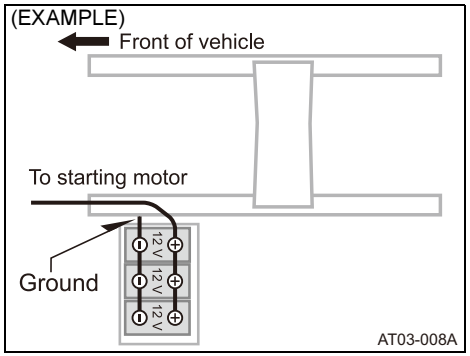


Fuel tanks and accessories to be installed on the chassis frame are installed on the inside of the chassis frame.

**Use of fuel ASTM 2-D**

You may use diesel fuel ASTM 2-D in cold weather.

**Use of coolant immersion heater**

- When the temperature is extremely low, installation of a coolant immersion heater into the engine block is recommended to warm up the coolant.
- When a coolant immersion heater is used, carefully read the heater's instructions.

**Maintenance to facilitate cold weather starting**

1. Check that there is no water in the fuel system. Water in the fuel system will freeze and make starting the engine impossible.
2. Always fill the fuel tank to full level, otherwise moisture could condense in the fuel tank causing rust and making it impossible to start.

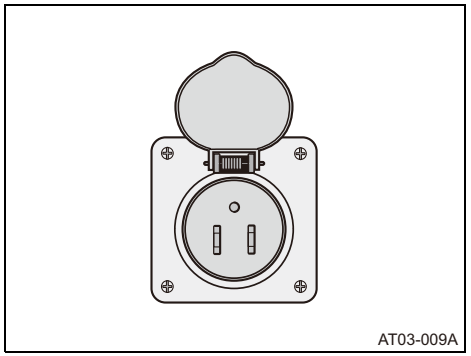
AT03-009A

**Engine block heater (If so equipped)**

The electrical socket for the engine block heater is located behind the front wheel and between under the cab step allowing entry to the driver's seat.

1. Remove all the rust and dirt from the engine block heater. Any rust, dirt or rainwater which is accumulated at the terminal can trip the circuit breaker.
2. Put the plug in the socket and turn on power (120V).

**⚠ CAUTION**

**Disconnect the power source plug outlet before starting the engine. Otherwise, the cables in the engine block heater may be cut by the vibration of the engine.**

H1-A038E01.book 12 ページ ２０１６年１０月１９日 水曜日 午後５時２６分

**Installation of a radiator grille cover**

**⚠ WARNING**

**To reduce the risk of accidents and/or damages to the vehicle due to the improper installation and use of the radiator grille cover, observe the following:**

- **Be sure to observe the manual, warnings and/or cautions for the radiator grille cover provided by the radiator grille cover manufacturer.**
- **Be sure to fix the radiator grille cover securely to avoid it coming off while operating the vehicle.**
- **Be sure to cut and remove the designated parts of the radiator grille cover for making the ventilation opening in accordance with this manual. Otherwise, such parts of the radiator grille cover may hamper safe driving and/or enter into the engine room resulting in death or serious injury in an accident or a fire, or damages to the vehicle.**

**⚠ CAUTION**

**Regarding the radiator grille cover to avoid damages to the engine and its relevant parts due to overheating of engine, be sure to observe the following:**

- **When driving the vehicle in outside air temperature above -4°F (-20°C), be sure to remove a radiator grille cover so that the ventilation opening of the radiator grille is not covered by the radiator grille cover.**
- **When a radiator grille cover is used, be sure to keep the ventilation opening uncovered in order to secure sufficient air flow to the inter cooler.**

Before the installation of a radiator grille cover, make the ventilation opening as follows:

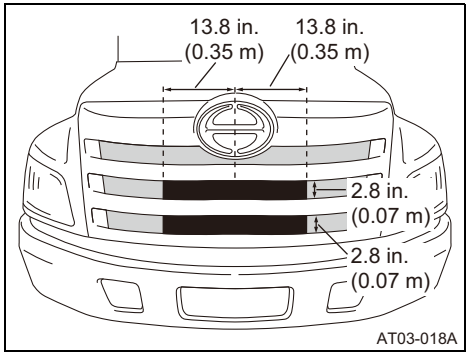


“Engine Overheat” warning message will appear if the engine is overheating. See “Engine Overheating” on page 4-13.

***NOTICE:***

*Overheating of the engine may cause excessive fan usage resulting in the reduced fuel efficiency and the noise of fan.*

Installation of a radiator grille cover (For dealer option in Canada)

**⚠ WARNING**

**To reduce the risk of accidents and/or damages to the vehicle due to the improper installation and use of the radiator grille cover, observe the following:**

- **Be sure to observe the manual, warnings and/or cautions for the radiator grille cover provided by your Hino dealer.**
- **Be sure to fix the radiator grille cover securely to avoid it coming off while operating the vehicle.**

**⚠ CAUTION**

- **When driving the vehicle in outside air temperature -4°F (-20°C) or below, be sure to install a radiator grille cover in accordance with this manual and the manual, warnings and/or cautions for the radiator grille cover. Otherwise, the relevant parts of the engine may freeze resulting in damages to the engine and its relevant parts.**
- **To avoid damages to the engine and its relevant parts due to overheating of engine, be sure to observe the following:**
  - **When driving the vehicle in outside air temperature above -4°F (-20°C), be sure to remove a radiator grille cover so that the ventilation opening of the radiator grille is not covered by the radiator grille cover.**
  - **When a radiator grille cover is used, be sure to keep the ventilation opening uncovered in order to secure sufficient air flow to the inter cooler.**

“Engine Overheat” warning message will appear if the engine is overheating. See “Engine Overheating” on page 4-13.

***NOTICE:***

*Overheating of the engine may cause excessive fan usage resulting in the reduced fuel efficiency and the noise of fan.*

## Before driving the vehicle— —Parking brake

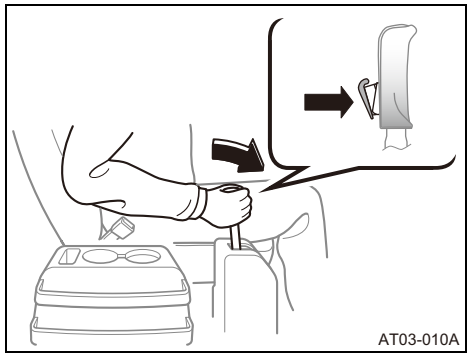


**Hydraulic brake type**

**Release the parking brake lever.**

Confirm that the parking brake warning light **(Ⓟ PARK or Ⓟ)** is off after releasing the parking brake.

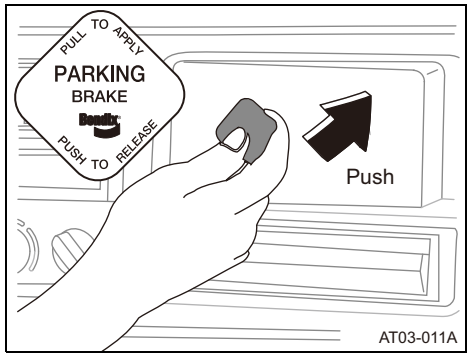


**Full air brake type**

**Push the parking brake control knob in.**

Confirm that the parking brake warning light **(Ⓟ PARK or Ⓟ)** is off.

**Check behind your vehicle for any obstructions.**

## Driving

**⚠ WARNING**

**Always heed the specific warnings set forth below when you drive the vehicle. If you fail to heed these warnings, the vehicle's service brake or its power steering system may not function, which could result in death or serious injury in an accident.**

- **Never drive the vehicle if it is exhibiting engine trouble.**
- **Never drive the vehicle with the clutch disengaged (Not applicable to automatic transmission).**
- **Never drive the vehicle with the gearshift lever in neutral position or the selector lever in the "P" or "N" position.**

**If you experience any problem with the power steering system or the brake system, immediately contact your Hino dealer and have the problem repaired.**

### Operation of manual transmission

When you start a loaded vehicle, place the gearshift lever in 1st gear and thereafter select the proper speed gear depending on the vehicle speed.

**⚠ CAUTION**

**To prevent engine damage due to overrunning, the maximum speeds for each gear should not be exceeded. Be especially careful when downshifting.**

**Always heed the following instructions. Failure to heed these instructions could cause damage to the transmission due to excessive friction heat on the clutch.**

- **Always stop the vehicle before shifting the gear to or from the reverse position.**
- **Smoothly engage the clutch by releasing the clutch pedal gradually when starting the vehicle or changing the gear.**
- **Maintain the proper engine idle speed when starting the vehicle.**
- **Never hold the vehicle on a slope with the clutch not fully engaged.**
- **Always start the vehicle in the proper gear.**
- **Never shift the gearshift lever until the vehicle has reached the appropriate shifting speed.**
- **Never coast with the clutch pedal pushed down. (Do not overrun the clutch.)**

**Promptly report any unusual clutch operation to your Hino dealer and have maintenance performed as soon as possible.**

### How to use the clutch pedal (Applicable for manual transmission only)

Do not rest your foot on the clutch pedal while driving. To disengage the clutch, depress the clutch pedal fully. To engage the clutch, release the clutch pedal gradually.

## USING BRAKE

**⚠ WARNING**

- **Never depress brake pedal fully except in an emergency situation. Fully depressing the brake can cause the vehicle to skid, especially when the roadway is wet, resulting in loss of vehicle control and in death or serious injury in an accident. “Fanning” (alternately applying and releasing the brake pedal) the brake pedal will use up air in the reservoir to be used for the service brake, and will result in decrease in performance of the service brake. (Full air brake type)**
- **Before traveling down a long or steep hill, make sure that the brakes work properly by lightly applying the brake pedal.**
- **Be careful not to overrun the engine when downshifting.**
- **Do not excessively apply the brake pedal. Frequent or continuous application of the brake pedal will overheat the service brake and cause fading of the brakes and vapor lock (hydraulic brake type), resulting in death or serious injury in an accident.**
- **Reduce vehicle speed when you drive through puddles. The stopping distance of your vehicle may be longer if the brakes and wheels get wet.**
- **After driving through the puddle, first make sure that there is no other vehicle around you and then apply the brakes lightly to confirm that they are working properly.**
- **If the service brakes do not work well, repeat the process and apply the service brakes lightly while driving your vehicle very carefully. If the service brake still does not work properly, contact your Hino dealer immediately.**

**⚠ CAUTION**

**Frequent, full braking can severely shorten the life of tires, brake drums and linings and other related vehicle parts.**

**Precautions Concerning the Anti-lock Brake System (ABS) (If so equipped)**

**⚠ WARNING**

- **Driving fast on icy, slippery or wet roads can lead to a loss of control and result in death or serious personal injury in an accident.**
- **Always adjust your speed and driving style to road, traffic, weather and visibility conditions. Be cautious when driving on wet roadways, ice, snow, gravel or dirt. Also adjust your speed and driving style to the type and condition of your tires. Always keep a safe distance behind any vehicle being driven in front of you.**
- **An anti-lock brake system (ABS) cannot overcome the laws of physics and The driver must always prevent the loss of vehicle control. Icy, slippery or wet roads continue to be dangerous even with ABS.**
- **ABS cannot reduce the dangers of an accident if you drive too fast for conditions, if you do not keep a safe distance behind the vehicle in front of you.**
- **Always use service brake properly although ABS prevents wheel lockup and assists the vehicle in coming to a stable stop during braking, it does not change the time you need to apply the brake pedal or the stopping distance of your vehicle.**
- **Never pump your service brake on a slippery or icy road. Doing so will cause the drive wheels to lock up and will make the vehicle unstable. If the drive wheels are locked up, disengage the clutch or set the gearshift lever to the "Neutral" position to stop the effect of the engine brake on the drive wheels. Shift the gear to the proper position in order to restore control of the vehicle.**

**Anti-lock Braking System (ABS) Operation**

ABS helps to keep the vehicle's wheels from locking up and helps to maintain the driver's ability to steer and control the vehicle.

When the ABS is activated, you may feel a slight vibration of the brake pedal. You may also feel a pull on the steering wheel and additional noise may be generated. These conditions are not malfunctions of the ABS. Adjust your speed to the road and traffic conditions and drive safely.

If the ABS is activated, the vehicle's air consumption rate will be higher than usual. If the air pressure becomes low and the air pressure warning light comes on and a beep sounds, immediately stop the vehicle in a safe place. Start to drive again only after restoring to the normal air pressure.

Improperly sized tires can negatively affect ABS functions. If you are not sure whether the tires installed on your vehicle if proper for ABS, consult your Hino dealer.

### STEERING

Before turning the vehicle, reduce the vehicle's speed as appropriate to conditions. Turning your vehicle with the brakes applied should be avoided. Doing so may accelerate the wear on tires and result in loss of vehicle control on a wet or slippery road.

### ENGINE OVERRUNNING

**⚠ WARNING**

**Never overrun the engine when downshifting. When downshifting on a downhill, apply the service brake and keep the vehicle speed within the maximum operating speed designated for each gear.**

**If tachometer pointer reaches the red zone, the engine is overrunning, and immediately reduce the engine speed.**

### DRIVING THROUGH A FLOODED AREA

***NOTICE:***

*Never drive the vehicle through a flooded area. If the water is deep enough to reach the bottom of the oil pan, this will cause failure of the cooling fan, slippage of the drive belts, or failure of the engine due to water sucked into the air intake system.*

### WINDSHIELD WIPER AND WASHER

**⚠ CAUTION**

- **Use the windshield washer to prevent the windshield from being frozen and to help clean the windshield.**
  **Never use windshield washer liquid that could damage paint or rubber.**
- **Remove the ice or snow from the windshield and wiper blades before using the wipers. In some places, removal of snow and ice may be required by local laws or regulations.**
- **When the wipers are frozen to the windshield, thaw or loosen the wipers carefully so as not to damage the wiper blades.**
- **In cold weather, do not use the windshield washer until the windshield is warm. Otherwise, the windshield washer fluid may be frozen on the windshield, obscuring your vision.**

- **Follow the manufacturer's instructions for the proper concentration of the windshield washer (see page 6-22 and for detailed information about the use of windshield washer fluid.)**

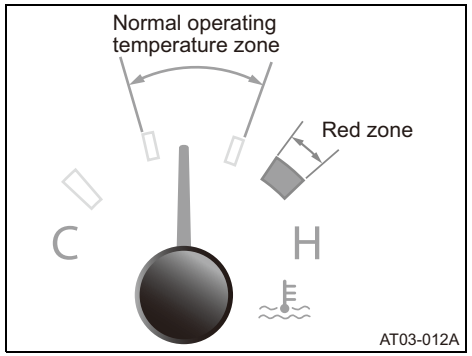


**ENGINE COOLANT (WATER) TEMPERATURE GAUGE**

The normal operating temperature zone is as shown in the illustration. Only drive your vehicle when the pointer is in the normal operating temperature zone.

**⚠ CAUTION**

**If the pointer of the engine coolant (water) temperature gauge is in the red zone, stop the vehicle in a safe place and keep the engine running at idle speed to cool the coolant. You may resume driving when the pointer returns to the normal operating temperature zone.**

**Be sure to follow the instructions on page 4-13.**

**YOUR VEHICLE IS EQUIPPED WITH AN INFORMATION DISPLAY AND WARNING LIGHTS ON THE INSTRUMENT CLUSTER**

The display shows the trip meter, time, drive management and other information when no abnormality of the vehicle has been detected. If an abnormality has been detected, the display shows cautionary information. When the key is turned to the "**ON**" position from the "**LOCK**" position, any previous display or cautionary information (if a vehicle abnormality has been detected) appears on the display.

## DEF - SCR system—

**This vehicle is equipped with a Diesel Exhaust Fluid (DEF) - Selective Catalytic Reduction (SCR) system for reduction of NOx (nitrogen oxide) emissions.**

**WHAT IS SCR?**

SCR is an abbreviation for "Selective Catalytic Reduction", a general term for an after treatment system which promotes a chemical reaction by using a catalyst for eliminating or detoxifying particular chemical ingredients. By mixing the NOx with the ammonia contained in DEF, NOx will be separated into water and nitrogen.

**WHAT IS DEF?**

DEF is an abbreviation for "Diesel Exhaust Fluid", a solution made from 67.5% purified water and 32.5% automotive-grade urea that serves as a carrying agent for the ammonia needed to reduce nitrogen oxide (NOx) emissions from diesel engines. When DEF is injected into the engine exhaust gas, downstream of the DPR (Diesel Particulate active Reduction system), it will be rapidly hydrolyzed (decomposed by reacting with water) producing the oxidizing ammonia needed by the DEF-SCR system to lower the level of NOx emissions.

- DEF is crystallized as white powder when it is dried. If you find the crystallized DEF on the surface of the DEF tank, wipe it off with a clean cloth.
- Keep your face away from DEF and do not sniff the DEF when you open the filler cap of the DEF tank. DEF may produce an odor when it is warmed up.
- If you dispose of the DEF, follow any local regulations.
- The DEF in the DEF tank freezes at 12°F (-11°C). If the DEF in the DEF tank is frozen, do not warm the DEF tank by using the burner and heater. The vehicle is equipped with a defrost device, and frozen DEF will be defrosted while the vehicle is being driven.

## —DEF - SCR system precautions

**⚠ WARNING**

**If the DEF-SCR system is not properly maintained, the maximum available engine torque will be gradually reduced to a value not exceeding 50% of the maximum torque, and thereafter, the maximum vehicle speed will be limited to 5 mph (8 km/h).**

**In order to maintain proper functioning of the DEF - SCR system, always follow the instructions below;**

- **If you need to replace any parts related to the DEF-SCR system, Hino genuine parts are required. Contact your Hino dealer for the replacement of parts and repair of the DEF-SCR system.**
- **Never reposition or make any modification to the DEF pump, DEF injection, DEF tank and DEF line.**

### WHEN DEF LEVEL IS LOW

**⚠ WARNING**

**In order to maintain proper functioning of the DEF-SCR system, always replenish the DEF tank immediately when the DEF Light on the instrument cluster goes on. Otherwise, the maximum available engine torque will be gradually reduced to a value not exceeding 50% of the maximum torque, and thereafter, the maximum vehicle speed will be limited to 5 mph (8 km/h). The sequence of gradual torque reduction and reduction of the maximum speed to 5 mph (8 km/h) is as follows;**

1. **When the DEF level is less than 10% of the DEF tank capacity, the DEF Light on the instrument cluster will go on, and “DEF LOW” will appear on the information display. At the same time, the voice warning “Refill DEF” will sound every 10 minutes.**

2. When the DEF level is less than 5% of the DEF tank capacity, the DEF Light on the instrument cluster will start to blink, the malfunction indicator light will go on and “Refill DEF Now Low Power” will appear on the information display. At the same time, the voice warning “Refill DEF” will sound every 10 minutes. If you do not replenish the DEF tank with DEF, the maximum available engine torque will be gradually reduced to a value not exceeding 50% of the maximum torque.
3. When the DEF level is less than 2.5% of the DEF tank capacity, “Refill DEF Now Low Power” will appear on the information display and the DEF empty light will appear on the information display. At the same time, the voice warning “Refill DEF” will sound every 5 minutes.
4. If you do not replenish the DEF tank with DEF, the maximum vehicle speed will be limited to 5 mph (8 km/h) in any of the following cases;
   i) When you stop and restart the engine,
   ii) When your vehicle is refueled,
   iii) When you start the vehicle after the engine has been idled for more than one hour, or
   iv) After you have continued to drive for 200 miles (321km).

**REPLENISHMENT OF THE DEF TANK**

**⚠ CAUTION**

- Use a clean funnel for the replenishment of DEF, so that DEF is not spilled on vehicle parts.
- Never allow dust to fall into the DEF tank while replenishing the DEF tank with DEF.
- DEF is available at truck stops, gas stations and Hino dealers.

**WHEN THE DEGRADATION OF DEF IS DETECTED**

**⚠ WARNING**

- **In order to maintain proper functioning of the DEF-SCR system, use API certified DEF only and never replenish the tank with diesel fuel, kerosene, gasoline or any other fluid than API certified DEF.**
- **If the degradation of DEF is detected, the DEF Quality Light and the malfunction indicator light go on. In this case, always drain DEF and replenish the DEF tank immediately. Otherwise, the maximum available engine torque will be gradually reduced to a value not exceeding 50% of the maximum torque, and thereafter, the maximum vehicle speed will be limited to 5 mph (8 km/h). The sequence of gradual torque reduction and reduction of the maximum speed to 5 mph (8 km/h) is as follows:**

**1. If the degradation of DEF is detected, the DEF Quality Light and the malfunction indicator light will go on. At the same time, “Change DEF Now Low Power” or “Change DEF to normal one with engine off, engine-key ON” will appear on the information display, and the voice warning “Change DEF” will sound every 10 minutes. After you have driven for 50 minutes with the DEF Quality Light lit, the maximum vehicle speed will be limited to 5 mph (8 km/h) in any of the following cases;**

**i) When you stop and restart the engine,**

**ii) When your vehicle is refueled,**

**iii) When you start the vehicle after the engine has been idled for more than one hour, or**

**iv) After you have continued to drive for 200 miles (321km).**

**2. If the degradation of DEF is detected again and the DEF Quality Light is again lit even after you have properly drained and replenished the DEF tank with clean DEF, the maximum available engine torque will be gradually reduced to a value not exceeding 50% of the maximum torque. In addition, the maximum speed will be limited to 5 mph (8 km/h) after you have driven for 40 minutes.**

- **Whenever the degradation of DEF is detected, stop the vehicle safely, shut off the engine and leave the key in the “ON” position while you replenish the DEF tank. Otherwise, the engine torque and vehicle speed will not be restored to its original level.**

## DRAIN THE DEF

**⚠ WARNING**

**Be sure to wait for at least ten minutes after the key is turned to the "LOCK" position before you start draining DEF, as the dosing control unit (DCU) starts working for the exhaust gas after treatment after the key is turned to "LOCK" position (you can hear the pumping sounds of DEF-SCR system while DCU is working). Otherwise, malfunction of the DEF-SCR system will occur.**

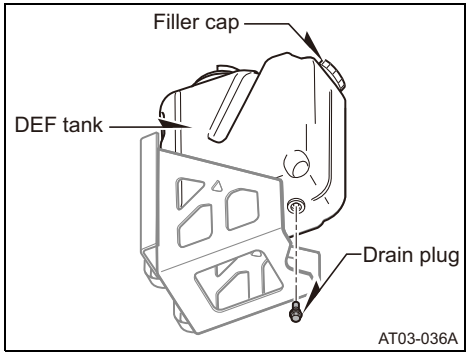


1. Stop the vehicle safely, shut the engine off.
2. Remove the drain plug and drain DEF into a suitable container (do not remove filler cap of the DEF tank).
3. Clean the drain plug and tighten the drain plug with a torque wrench.

**Tightening torque:** N·m (lbf·ft., kgf·cm)
4—6 (3.0—4.4, 41—61)

## WHEN A DEF-SCR SYSTEM MALFUNCTION IS DETECTED

**⚠ WARNING**

**In order to maintain proper functioning of the DEF-SCR system, have your vehicle repaired by your Hino dealer immediately when the after treatment malfunction light blinks, and the malfunction indicator light goes on. Otherwise, the maximum available engine torque will be gradually reduced to a value not exceeding 50% of the maximum torque as follows;**

**1. When a DEF-SCR system malfunction is detected, the after treatment malfunction light will start to blink, the malfunction indicator light will go on and "SCR Malfunction" will appear on the information display. At the same time, a beep sounds will sound for 10 seconds every 10 minutes.**

2. After you have driven for 50 minutes with the after treatment malfunction light blinking, the maximum vehicle speed will be limited to 5 mph (8 km/h) in any of the following cases;
   i) When you stop and restart the engine,
   ii) When your vehicle is refueled,
   iii) When you start the vehicle after the engine has been idled for more than one hour, or
   iv) After you have continued to drive for 200 miles (321km).

3. If the DEF-SCR system malfunction is detected again, and the DEF Quality Light goes on, within 40 minutes operation of your vehicle the maximum available engine torque will be gradually reduced to a value not exceeding 50% of the maximum torque. In addition, after you have driven for 40 minutes, after the malfunction is re-detected, the maximum speed will be limited to 5 mph (8km/h). In this situation, contact your Hino dealer.

**WHEN MAINTENANCE OF THE DEF-SCR SYSTEM IS REQUIRED**

**⚠ WARNING**

**In order to maintain proper functioning of DEF-SCR system, have your vehicle serviced by your Hino dealer when the DPR or SCR maintenance requirement light on the instrument cluster goes on and “SCR Maintenance” appears on the information display.**

### —How to check the DEF level

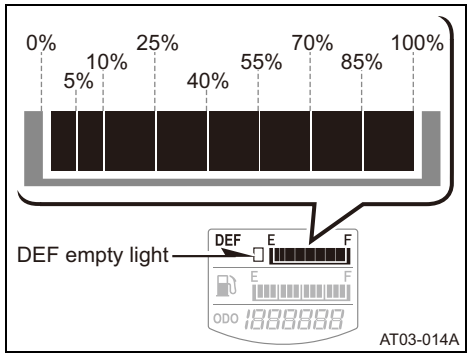


**DEF GAUGE ON THE INFORMATION DISPLAY**

The DEF gauge on the information display shows the approximate amount/level of DEF in the DEF tank.

When the tank is full, 8 indicator bars are lit.

DEF tank capacity:

| gal. (L, Imp. gal.) |
|---|
| 5.0 (19.0, 4.2) |

### —How to check and clean the breather hose

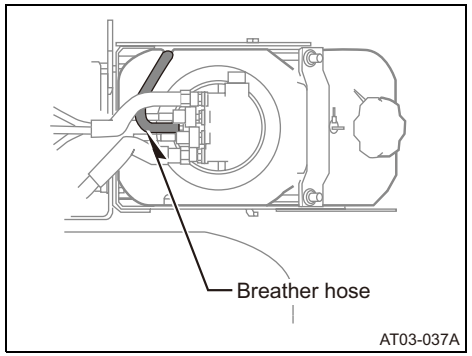


The breather hose can clog up with crystallized DEF, which can cause the DEF to overflow from the tank when pouring the DEF. In such a case, clean the breather hose in accordance with the following procedures;

1. Pull out the end of the breather hose from the DEF tank.
2. Rinse the inside of the breather hose with clean water.
3. Reinstall the breather hose securely.

### —DEF tank strainer

In order to keep foreign materials from getting into the DEF tank, a strainer is attached at the mouth of the supply inlet.

**REPLENISHMENT**

- When replenishing DEF, do not remove the strainer. If the strainer is removed when replenishing, foreign materials could get inside the DEF tank and could cause problems with the DEF–SCR system.
- Do not remove the strainer other than to clean it.

**HOW TO CLEAN THE DEF TANK STRAINER**

- Before replenishing DEF, make sure there are no foreign materials or deposits attached to the strainer.
- If there are foreign materials or deposits attached to the strainer, remove the strainer and clean it with distilled water.
- If there are foreign materials or deposits on the strainer when you replenish DEF, it may back up and spill out from the mouth of the supply inlet.

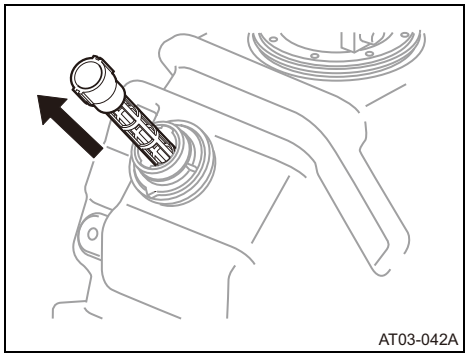
AT03-042A

1. Remove the filler cap and remove the strainer by hand.
2. Clean the strainer of foreign materials with distilled water.
3. Reinstall the strainer.
4. Tighten the filler cap securely.

**⚠ CAUTION**

- **After cleaning the strainer and when reinstalling it, make sure no dirt or foreign materials are attached to it.**
- **When removing the strainer, make sure no dirt or any foreign materials get inside the DEF tank, then reinstall the cap.**

## —Gauge and indicator for DEF-SCR system

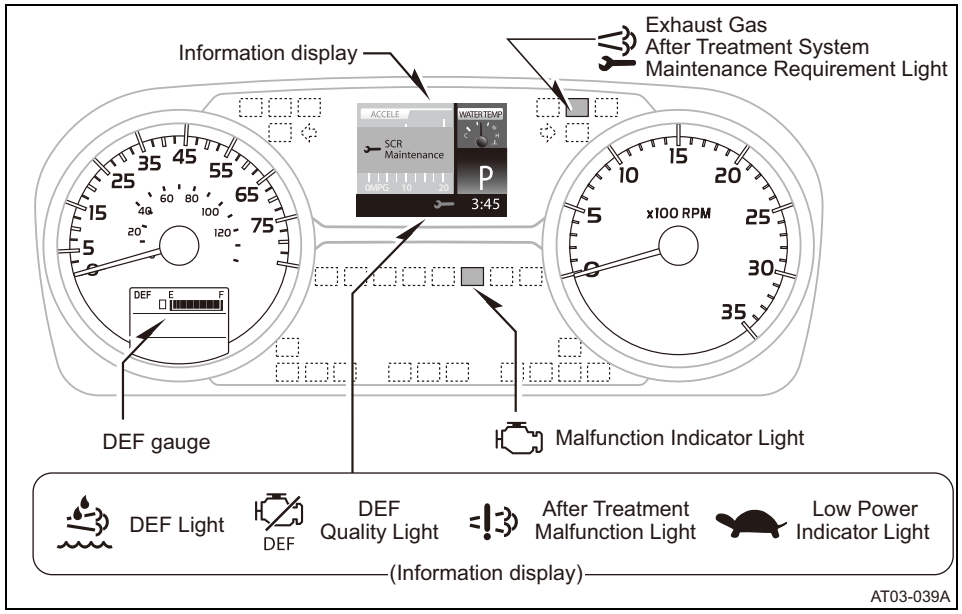

## —DEF level warning

| Level of DEF remaining | DEF gauge | Warning information | | | Restriction to the vehicle |
|---|---|---|---|---|---|
| | | Warning light | Information display | Voice Warning | |
| **Less than 10%** | 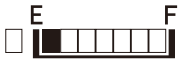 |  |  | “**Refill DEF**” (warns every 10 min.) | — |
| **Less than 5%** | 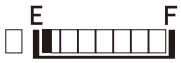 | Blinking  and  and  |  | “**Refill DEF**” (warns every 10 min.) | Torque is reduced to a value not exceeding 50% of the maximum torque |
| **Less than 2.5%** | 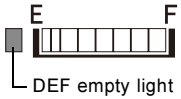 | |   AT03-018A (When the vehicle speed is limited) | “**Refill DEF**” (warns every 5 min.) | Speed is limited to 5 mph (8km/h) in any of the following cases;<br>(i) When you stop and restart the engine,<br>(ii) When your vehicle is refueled,<br>(iii) When you start the vehicle after the engine has been idled for more than one hour, or<br>(iv) After you have continued to drive for 200 miles (321 km). |
| **0%** | | |  | “**Refill DEF**” (warns every 5 min.) | Speed is limited to 5 mph (8 km/h) |

## —DEF quality warning

| Stage | Condition | Warning information | | | | Restriction to the vehicle |
|---|---|---|---|---|---|---|
| | | Warning light | Information display | | Voice Warning | |
| | | | When the vehicle is moving | When the vehicle is stopped | | |
| 1 | **When the degradation of DEF is detected** | DEF and | Change DEF Now Low Power<br>AT03-019A | Change DEF to normal one with engine off, engine-key ON. | "**Change DEF**" (warns every 10 min.) | Torque is reduced to a value not exceeding 50% of the maximum torque |
| 2 | **After 50 min. with the key in "ON" position after the detection** | and | Change DEF Now Speed limit | | "**Change DEF**" (warns every 5 min.) | Speed is limited to 5 mph (8km/h) in any of the following cases;<br>(i) When you stop and restart the engine,<br>(ii) When your vehicle is refueled,<br>(iii) When you start the vehicle after the engine has been idled for more than one hour, or<br>(iv) After you have continued to drive for 200 miles (321 km). |

**—DEF quality re-warning (when the degradation of DEF is detected again within 40 operating hours after the degradation of DEF is once undetected)**

| Stage | Condition | Warning information | | | | Restriction to the vehicle |
|---|---|---|---|---|---|---|
| | | Warning light | Information display | | Voice Warning | |
| | | | When the vehicle is moving | When the vehicle is stopped | | |
| 1 | **When the degradation of DEF is detected** | DEF and | Change DEF Now Low Power<br>AT03-019A | Change DEF to normal one with engine off, engine-key ON. | "**Change DEF**" (warns every 10 min.) | Torque is reduced to a value not exceeding 50% of the maximum torque |
| 2 | **After 30 min. with the key in "ON" position after the detection** | and | Change DEF Now Speed limit | | "**Change DEF**" (warns every 5 min.) | Speed is limited to 5 mph (8 km/h) |

### —Warning for DEF maintenance requirement

| Condition | Warning information | | Requirement |
|---|---|---|---|
| | Warning light | Information display | |
| When maintenance of the DEF-SCR system is required |  AT03-020A |   | Stop the vehicle and contact your Hino dealer for maintenance. |

## —Warning of malfunction of DEF-SCR system

| Stage | Condition | Warning information | | | Restriction to the vehicle |
|---|---|---|---|---|---|
| | | Warning light | Information display | Beep (Pi,pi,pi...) | |
| 1 | **Malfunction is detected** | Blinking  and  and  |   | Sounds for 10 sec. (warns every 10 min.) | Torque is reduced to a value not exceeding 50% of the maximum torque |
| 2 | **After 50 min. with the key in “ON” position after the detection** | | | Sounds for 3 min. (warns every 3 min.) | Speed is limited to 5 mph (8km/h) in any of the following cases;<br>(i) When you stop and restart the engine,<br>(ii) When your vehicle is refueled,<br>(iii) When you start the vehicle after the engine has been idled for more than one hour, or<br>(iv) After you have continued to drive for 200 miles (321 km). |

**—Warning of malfunction of DEF-SCR system when the malfunction is detected again within 40 operating hours after changing DEF or mending the DEF-SCR system for the warning of malfunction of DEF-SCR system for the first time**

| Stage | Condition | Warning information | | | Restriction to the vehicle |
|---|---|---|---|---|---|
| | | Warning light | Information display | Beep (Pi,pi,pi...) | |
| 1 | **Malfunction is detected** | Blinking  and  and  |   | Sounds for 10 sec. (warns every 10 min.) | Torque is reduced to a value not exceeding 50% of the maximum torque |
| 2 | **After 30 min. with the key in “ON” position after the detection** | | | Sounds for 3 min. (warns every 3 min.) | Speed is limited to 5 mph (8 km/h) |

### Diesel Particulate active Reduction system (DPR)—

DPR is an abbreviation for Diesel Particulate active Reduction system. The DPR automatically regenerates when the quantity of soot collected in the system exceeds a specific quantity.

This helps to prevent an abnormal accumulation of soot and to keep the DPR cleaner in good condition.

**⚠ CAUTION**

- **Use ultra low sulfur diesel fuel (sulfur content: Less than 15ppm (0.0015%)). If you use any other fuel, the engine and other components of the vehicle such as an exhaust gas purifier may be damaged.**
- **Do not replace the tailpipe by your self for any reason. Improper replacement of the tailpipe may diminish the effectiveness of and cause damage to the DPR. Contact your Hino dealer for replacement of the tailpipe.**

Use of API CJ-4 grade engine oil is recommended to achieve optimum performance of the DPR.

When using biodiesel fuel, see “Table 8: Requirements of biodiesel fuel usage” on page 6-109, and please consult your Hino dealer.

**⚠ CAUTION**

**Use of certain biodiesel fuel may damage the exhaust system. Be sure to contact your Hino dealer and follow the dealer's instructions regarding the use of biodiesel fuel before you use the biodiesel fuel with your vehicle.**

**Vehicles equipped with a DPR automatically regenerate the soot collected in the DPR, while the engine is running.**

- Depending on the operating conditions (e.g. stopping the engine frequently or using the exhaust brake frequently while the DPR is processing the regeneration), the regeneration of the DPR may not be completed automatically. If regeneration is not completed, the indicator lights on both the DPR manual regeneration switch and the instrument cluster blink. If these lights blink, perform DPR manual regeneration to complete the regeneration in accordance with the instructions set forth on page 3-37.
- During the time that the DPR regenerates soot collected in the DPR, the engine idle speed increases. (Note that the indicator on the information display shows the status of the regeneration only when the engine is idling (see page 2-109)).
- If engine idling continues for a long period of time, the engine idle speed may increase and the exhaust brake may be turned on in order to reduce the discharge of white smoke.
- Use of API CJ-4 grade engine oil is recommended to achieve optimum performance of the DPR.

**Vehicles equipped with the DPR have the following characteristics.**

- After regeneration of the DPR, the odor of the exhaust gas will be different from that of a vehicle without the DPR.
- Discharge of white smoke (which consists of water vapor) from the muffler soon after the DPR is activated is normal.
- Discharge of white smoke (which consists of water vapor) from or around the muffler while DPR regeneration is in process is normal.

### —Manual regeneration

**⚠ WARNING**

**In order to maintain proper functioning of the DPR and to avoid damage to the engine, perform manual regeneration as soon as possible after the indicator light starts to blink and before the vehicle has been driven 95 miles (150 km). Always follow the following instructions before performing manual regeneration.**

**To reduce the risk of fire, keep any flammable material away from the exhaust system.**

**Never touch the DPR, heat insulator, exhaust pipe or muffler during regeneration. Severe burns or other personal injuries could occur.**

**Always turn the PTO switch off if your vehicle is equipped with a PTO prior to beginning the manual regeneration procedure.**

### —DPR manual regeneration switch

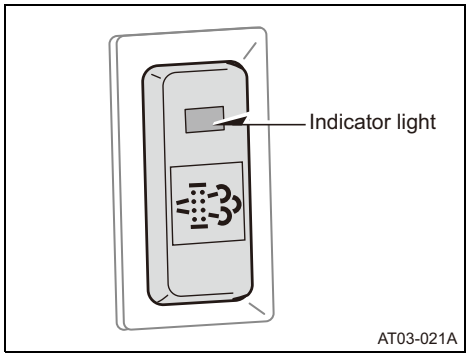


**The DPR regeneration switch is the manual regeneration switch for cleaning the soot collected from the exhaust gas in order to maintain proper functioning of the DPR.**

DPR manual regeneration is required when the indicator light starts to blink and the information display shows “DPR Manual Regen Required”. Before starting manual regeneration do the following:

1. Turn off the PTO switch if your vehicle is equipped with a PTO.
2. Park the vehicle on a level and solid place away from all flammable material such as high grass or leaves.
3. Firmly apply the parking brake.
4. Place the gearshift lever in neutral position (for manual transmission) or place the selector lever in “**P**” position (automatic transmission with “**P**” position) or “**N**” position (automatic transmission without “**P**” position).
5. While manual regeneration is in process:

i) Keep the engine running at idle speed,

ii) Never stop the engine,

iii) Never depress the accelerator pedal,

iv) Never shift the gear, and

v) Never operate the PTO.

Start manual regeneration by doing the following:

1. Push the DPR manual regeneration switch located below the blinking indicator light is blinking. The information display will show a message indicating the stage of the regeneration process, see page 2-109 for detail.
2. Confirm that the indicator light is blinking and that the engine idle speed has increased.
3. Never allow anyone to touch the DPR cleaner, exhaust pipes and muffler during regeneration which get very hot can could cause serious burns.
4. Wait for 15 to 20 minutes for manual regeneration to be completed.
5. Do not move or operate the vehicle until the indicator light goes off and the idle speed returns to normal level.

- Manual regeneration can be performed while the engine is idling and after the DPR indicator light has been blinking for at least 10 seconds.
- If you start driving before manual regeneration is completed, the DPR indicator light blinks again.
- If you continue driving until the DPR gauge reading reaches the 8th bar of the gauge (See page 2-94), the DPR indicator light (See page 2-66), the low power indicator light (See page 2-73) and the Malfunction indicator light (See page 2-66) comes on, and the engine output is limited, resulting in decreased acceleration.
- Manual regeneration is completed in 15 to 20 minutes in most cases after the engine is warmed up. If the manual regeneration is not completed within 40 minutes after it started and the malfunction indicator light (See page 2-66) comes on, contact your Hino dealer.

**—DPR manual regeneration requirement**

Whenever the number of the bars of the DPR gauge in the instrument cluster increases beyond five, the voice warns you to “Park the vehicle in a safe space. Push DPR switch button.”.

When the gauge reading reaches the 8th bar, the DPR indicator light (See page 2-66), the low power indicator light (See page 2-73) and the Malfunction indicator light (See page 2-66) comes on, and the engine output is limited.

If the engine keeps running in the 10th bar of the DPR gauge, the after treatment malfunction light (See page 2-66), the low power indicator light (See page 2-73) and the Malfunction indicator light (See page 2-66) comes on, and the engine output is limited.

Once the after treatment malfunction light (See page 2-66), the low power indicator light (See page 2-73) and the Malfunction indicator light (See page 2-66) comes on, it is necessary to have your vehicle checked and repaired as soon as possible by your Hino dealer.

| DPR gauge reading | Information display | Indicator light | | | | Built-in indicator light | Voice warning | Restriction to the vehicle |
|---|---|---|---|---|---|---|---|---|
| | | | | | | | | |
| When the DPR gauge reading reaches 5th bar | 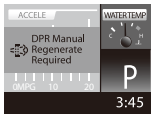 AT03-042A | Blinking | — | — | — | Blinking  | “Park the vehicle in a safe place. Push DPR switch button.” | — |
| When the DPR gauge reading reaches 6th bar | | | | | | | | |
| When the DPR gauge reading reaches 7th bar | | | | | | | | |
| When the DPR gauge reading reaches 8th bar | 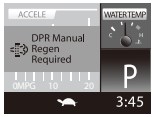 AT03-040A | Blinking | — | — | — | | | Torque is reduced to a value not exceeding 30% of the maximum torque. Speed is limited to 55 mph (88km/h). |
| When the DPR gauge reading reaches 9th bar | | | | | | | | |
| When the DPR gauge reading reaches 10th bar | | | | | | | | Torque is reduced to a value not exceeding 30% of the maximum torque. Speed is limited to 35 mph (56km/h). |
| If the engine keeps running in the 10th bar of the DPR gauge | 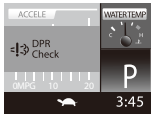 AT03-041A | — | — | — | — | — | — | Torque is reduced to a value not exceeding 30% of the maximum torque. Speed is limited to 25 mph (40km/h). |

### Differential lock (If so equipped)—

This device locks the rear differential and its use should be limited to situations where the vehicle is being driven on unpaved, rough, snowy, frozen or other slippery roads where one of the wheels of the driving axle are apt to spin.

**⚠ WARNING**

**ALWAYS observe the following instructions. Improper operation of the differential lock may cause an accident resulting in death or serious injury due to loss of the control of the vehicle, or damage to the differential gear.**

- **Never use the differential lock except on unpaved, rough, snowy, frozen or other slippery road, where one of the driving wheels are apt to spin. Be sure to confirm that the differential lock switch is "OFF" before you drive on non-slippery roads.**
- **Never operate the differential lock switch while the vehicle operates, or while the driving wheels are spinning, slipping or losing traction. Only operate the differential lock switch when the vehicle is stopped.**
- **Never operate the vehicle at more than 25 mph (40 km/h) while the differential lock switch is "ON".**
- **Never operate the vehicle on a downhill road while the differential lock switch is "ON" as control of the vehicle may be lost, or a trailer truck could jackknife.**
- **Carefully operate the vehicle at low speed while the differential lock switch is "ON" as the turning radius of the vehicle increases. This condition is called "understeer".**

### —How to operate the differential lock switch

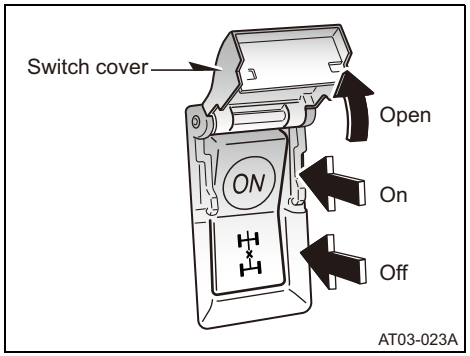


**Differential lock switch**

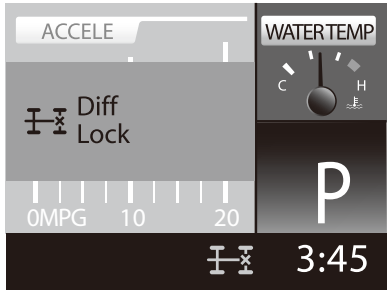


AT03-024A

1. Stop the vehicle before you operate the switch.
2. Open the cover of the differential lock switch.
3. Press "**ON**" to lock the differential lock. At the same time, the information display will show .
4. Press "" at the lower part of the switch to release the differential lock.

## Economy running switch

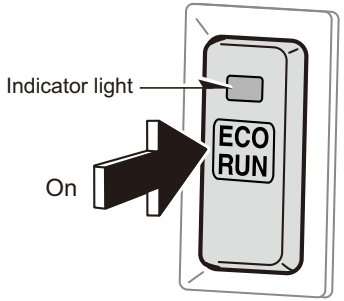


AT03-025A

This device is used for fuel-saving driving. Turning on the economy running switch helps the driver to save fuel and to minimize any fuel consumption deviation.

With the economy running switch turned on, the indicator light of the switch is illuminated.

## Cruise control—

The cruise control system maintains an electronically stored constant speed when the vehicle is being driven. After the the speed of the vehicle is set by operating the cruise control, the vehicle continues to operate at the speed set even when the driver's foot is taken off of the accelerator pedal. The purpose of the cruise control system is to reduce driver fatigue.

Cruise control should be used whenever the driver wishes to travel at a constant speed for long intervals such as when driving on interstate highways.

**⚠ WARNING**

- **Never use the cruise control under any of the following roads conditions. Doing so could result in an accident causing serious injury or death.**

- **Never use the cruise control if the roadway is slippery because of ice, snow, standing water, gravel or oil or because of any other reason. The tires of the vehicle may spin and the driver may lose control resulting in an accident.**
- **Never use the cruise control on steep downhill grades. Engine braking may be insufficient to be effective in slowing the vehicle and the speed set by the cruise control may be exceeded, resulting in death or serious injury in an accident.**
- **Never use cruise control when driving off-road or on unpaved surfaces.**
- **Cruise control can be dangerous where you cannot drive safely at a steady speed. Never use the cruise control on winding roads, in heavy traffic or where you cannot keep a safe distance between you and the vehicle ahead of you.**

### —How to set the cruise control

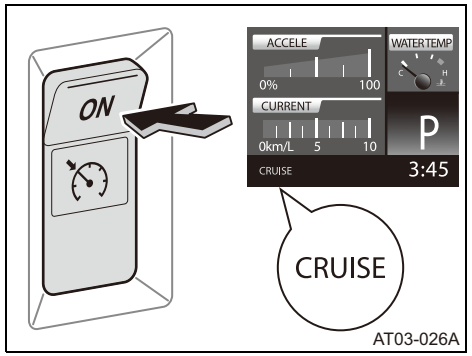


**Cruise control main switch**

**⚠ WARNING**

**Be sure to confirm on the information display that the cruise control is turned off when you are not using the cruise control. Mistakenly activating or resuming the cruise control by touching the cruise control main switch or cruise control set button may cause loss of control of the vehicle, resulting in death or serious injury in an accident.**

Press the cruise control main switch “**ON**” for at least 0.5 sec. and the cruise light (yellow-green in color) on the information display is illuminated.

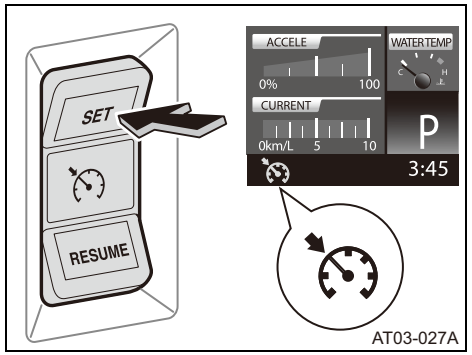


**Cruise control set button**

**The cruise control operates when the cruise control set button is pressed for at least 0.5 sec. when you reached the desired speed.**

**⚠ CAUTION**

**The vehicle will continue to travel at the desired speed even after your foot is removed from the accelerator pedal. Cruise control will not work at speeds of less than 31 mph (50 km/h).**

### TEMPORARY OPERATION

When you need to accelerate with the cruise control on, simply press on the accelerator pedal. You will speed up temporary unless the vehicle is already at full power such as on an uphill road.

When your foot is taken off the accelerator pedal, the vehicle returns to the original speed you set for the cruise control.

### TEMPORARY CANCELLATION

While driving with the cruise control, the cruise control is temporarily cancelled automatically in the following cases. (The cruise light color changes from yellow-green to orange.)

a. **When the exhaust brake is turned on,**
b. **When the brake pedal is depressed,**
c. **When the clutch pedal is depressed,**
d. **When shifting to neutral has been done,**
e. **When the vehicle speed has dropped to 28 mph (45 km/h) or lower.**

In the above situations, use the "**RESUME**" button to return to automatic cruise control at the speed set previously.

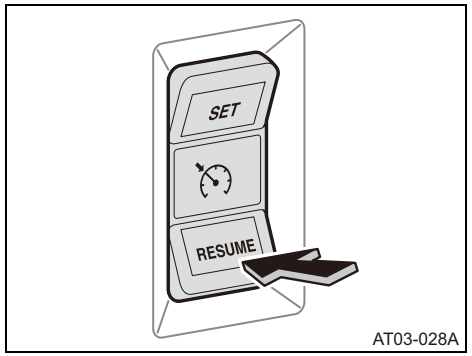


**RESUMING CRUISE CONTROL**

Press the "**RESUME**" button on the cruise control set button while driving, and take your foot off the accelerator pedal. (The cruise light color changes from orange to yellow-green.)

**HOW TO CHANGE THE SET SPEED OF THE CRUISE CONTROL**

**Increase the vehicle's speed**

1. Press "**RESUME**" on the cruise control set button for at least 0.7 sec. and then the vehicle will accelerate until you release "**RESUME**".
2. Release "**RESUME**" in the cruise control set button when the desired speed has been reached.
3. Every time you push "**RESUME**" on the cruise control set button, you can increase vehicle speed 0.6 mph (1km/h).

**Decelerate the vehicle's speed**

1. Press "**SET**" on the cruise control set button continuously and then the vehicle will decelerate until you release "**SET**".
2. Release "**SET**" on the cruise control set button when the desired speed has been reached.
3. Every time you push "**SET**" on the cruise control set button you can decrease vehicle speed 0.6 mph (1km/h).

**HOW TO CHANGE THE DESIRED SPEED SET BY CRUISE CONTROL WITH THE ACCELERATOR PEDAL OR BRAKE PEDAL**

1. Press the accelerator pedal or the brake pedal to change to the desired speed.
2. Press "**SET**" on the cruise control set button.

**TURN OFF OF CRUISE CONTROL**

Cruise control is turned off when "**ON**" on the cruise control main switch is pressed for at least 0.5 sec. with the cruise light off.

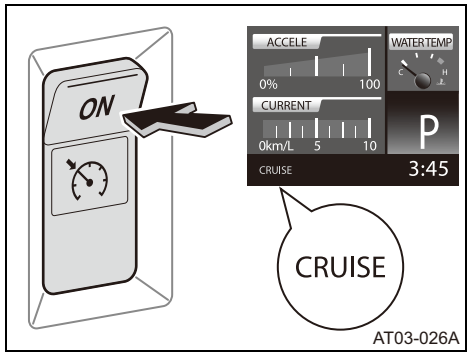

AT03-026A

**ADJUSTMENT OF ENGINE IDLE SPEED**

**The engine idle speed can be set with the cruise control main switch and the cruise control set button.**

When the cruise control main switch is pressed, the indicator light (orange in color) comes on, and you can adjust engine idle speed when the cruise control main switch is pressed.

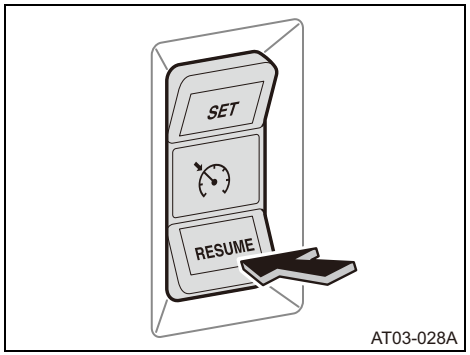

AT03-028A

**Increasing engine idle speed**

1. Press "**RESUME**" on the cruise control set button for at least 0.7 sec. and then the engine idle speed starts to increase until you release "**RESUME**".
2. Release the "**RESUME**" button when the desired idle speed has been reached.
3. Every time you push "**RESUME**" on the cruise control set button you can increase engine idle RPM 50 rpm (r/min).

**Deceleration of engine idle speed**

1. Press “**SET**” on the cruise control set button continuously then the idle speed starts to decrease until you release “**SET**”.
2. Release “**SET**” on the cruise control set button when the desired idle speed has been reached.
3. Every time you push “**SET**” on the cruise control set button you can decrease engine idle RPM 50 rpm (r/min).

**Temporary cancellation**

Adjustment of engine idle speed is automatically cancelled, temporarily, in the following situations.

**a. When the cruise control main switch is turned off,**

**b. When the brake pedal is depressed,**

**c. When the clutch pedal is depressed,**

**d. When the parking brake is released,**

**e. When the exhaust brake turns on,**

**f. When the PTO switch is turned on,**

**g. When the vehicle is moving.**

In the above situations (b to g), use the “**RESUME**” button to return to the engine idle speed previous set by use of the cruise control switch.

## Horn

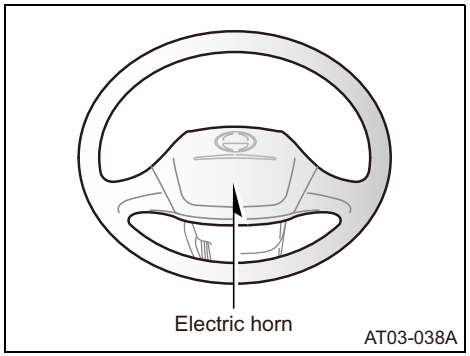


**Electric horn**

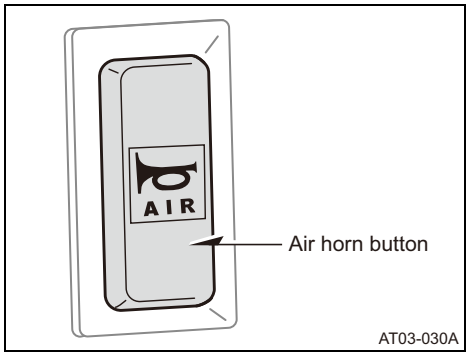


**Air horn (If so equipped)**

Some areas have Local Noise Control Laws regulating horn use.

If your vehicle is equipped with both an electric horn and an air horn, use the electric horn in accordance with the local regulations.

**How to use the electric horn**

The switch of electric horn is mounted in the center of the steering wheel.

Press on the center of the steering wheel to blow the electric horn.

**How to use the air horn**

Press on the button to blow the air horn.

## After driving—

**How to stop the engine**

1. Apply the parking brake firmly and place the gearshift lever in neutral position (for manual transmission) or place the selector lever in "**P**" position (automatic transmission with "**P**" position) or "**N**" position (automatic transmission without "**P**" position).
2. Idle the engine for 5 minutes before stopping the engine. Then turn the key to the "**ACC**" position to shut off the engine.
3. Turn the key while pushing to set it at the "**LOCK**" position. Then pull out the key.

***NOTICE:***

*Before stopping the engine, idle the engine approximately for 5 minutes. If the engine is stopped suddenly without idling, the turbocharger is forced to rotate without oil pressure. This may eliminate the necessary oil film and cause the bearing wear.*

## —Warning to park

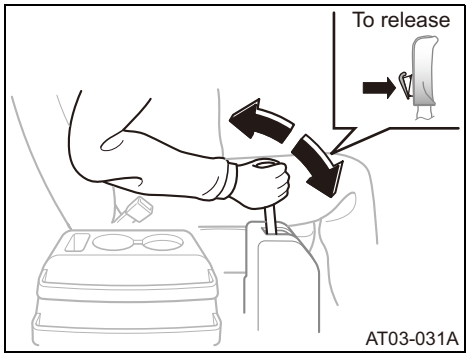


**Hydraulic brake type**

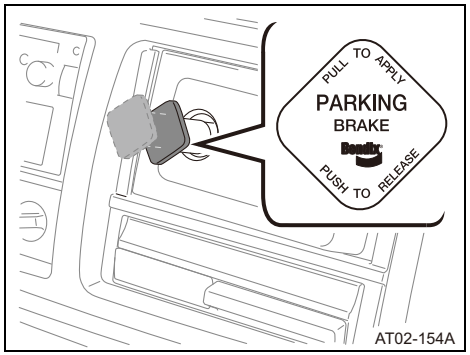


**Full air brake type**

**⚠ WARNING**

**Apply the parking brake firmly and if you park on a hill or slope, block all the wheels so that the vehicle does not move.**

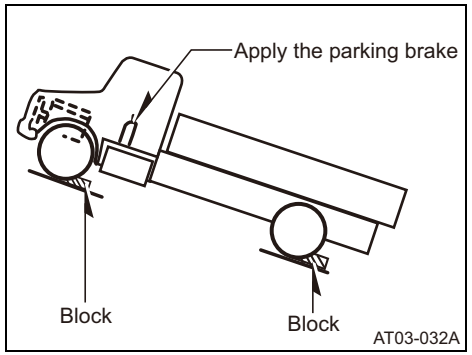


### —Drain water from the air tank

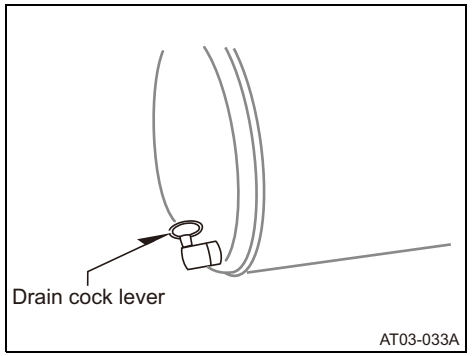


After driving, drain water from the air tank by turning on the drain cock lever.

**⚠ CAUTION**

**In the cold weather (less than 32°F or 0 °C), drain water from the air tank before and after driving the vehicle. Otherwise, the air lines of the vehicle may freeze, which could adversely affect the performance of the braking system.**

### —Check the function of the air dryer

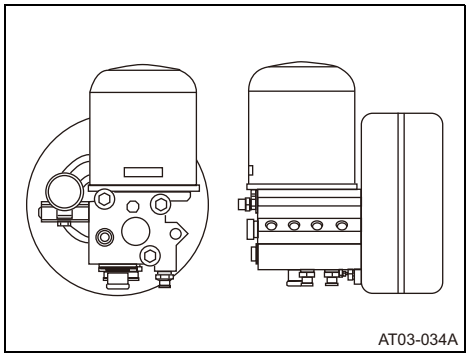


Check that there is no water or oil present in the air dryer by opening the drain cocks of the reservoirs before and/or after operation the vehicle. If there is water or oil present in the air dryer, consult your Hino dealer.

## Starting the engine after long vehicle storage

1. Check the engine, transmission, rear axle housing, brake for proper oil levels. Check the fluid levels for brake (Hydraulic brake type), clutch (Not applicable for automatic transmissions) and power steering. Check the coolant level. Add oil, fluid or coolant if required.
2. Make sure that ground cables for both the engine and battery are well grounded, and that the connections are clean and free of rust and corrosion. Check that the batteries are properly charged. Charge the batteries, if necessary.

**Tightening the Battery cable fitting nuts torque is as follows:**

**Battery to connector ϕ 8 mm:**

N·m (lbf·ft, kgf·cm)

5.9—9.8 (52—87, 60—100)

**Connector to cable ϕ 10 mm:**

N·m (lbf·ft, kgf·cm)

12—18 (8.7—13, 120—180)

3. Apply the parking brake firmly. Place the gearshift lever in neutral position (for manual transmission) or place the selector lever in "**P**" position (automatic transmission with "**P**" position) or "**N**" position (automatic transmission without "**P**" position).
4. Depress the clutch pedal fully (Not applicable for automatic transmissions).
5. Then turn the key to the "**START**" position and allow the engine to start until the oil pressure warning light goes off.

***NOTICE:***

- *Do not run the starter motor more than 10 seconds at a time.*
- *If the oil pressure warning light comes on, immediately stop the engine and consult your Hino dealer.*

H1-A038E01.book　50 ページ　２０１６年１０月１９日　水曜日　午後５時２６分

H1-A038E01.book 1 ページ ２０１６年１０月１９日 水曜日 午後５時２６分

# SECTION 4

## IN AN EMERGENCY

Using your hazard warning lights ..... 4-2
Emergency starting (Jump starting) ..... 4-2
Installation of a battery disconnect switch ..... 4-6
Damaged tires ..... 4-7
Towing ..... 4-11
When the vehicle gets stuck in loose sand, ice or snow; freeing the vehicle ..... 4-13
Engine Overheating ..... 4-13
How to release the parking brake manually ..... 4-15

Read the entire manual before using the vehicle. Failure to follow instructions, warnings and safety precautions could result in death, serious injury and/or damage to the vehicle.

## Using your hazard warning lights

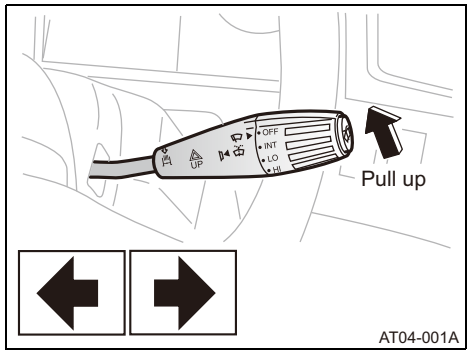


### HAZARD WARNING LIGHTS

**WARNING**

- **If, for any reason while driving, a warning light on the instrument cluster comes on or beeps sound, pull off the road and stop your vehicle as soon as it is safe to do so.**
- **Always turn on the hazard warning lights immediately to warn approaching traffic.**

To turn on the blinking hazard warning lights, pull the lever up located to the right of the steering column. The front and rear turn signal lights blink on and off whether the key is or is not in the starter switch. At the same time, the turn signal indicators on the instrumental panel also blink.

- You may not use turn signal lever for the blinks while the hazard warning blinks are on.
- To turn the blinks off, push the lever up again.

***NOTICE:***

*Do not add additional turn signal lights to the vehicle by yourself. Consult your Hino dealer if it is necessary for you to have additional turn signal lights on your vehicle.*

## Emergency starting (Jump starting)

**If your vehicle's batteries have run down, you may want to use the battery of another vehicle as a booster battery to start your vehicle's engine. Be sure to heed the following warnings before jump starting your engine.**

**WARNING**

- **An engine with discharged batteries cannot be started by pushing or pulling the vehicle. Never try to start the engine by pushing or pulling the vehicle. The vehicle's service brake may not function when a vehicle is moving without engine running, and doing so could result in death or serious injury in an accident.**

- **Working on the batteries or the electrical system in your vehicle can cause serious acid burns, fires or electrical shock.**
- **Battery fluid contains sulfuric acid which is poisonous and corrosive. It can cause blindness and damage unprotected skin. Be careful not to get it on you, your clothing, or the vehicle.**
- **Always wear protective gloves and eye protection.**
- **If you get the battery acid on your skin or in your eyes, immediately flush with cold water, remove any contaminated clothing and get medical help immediately. Continue to apply cold water with a sponge or cloth while en route to the medical facility.**
- **If you swallow any battery acid, get medical attention immediately.**
- **Since the battery produces explosive gas, do not bring an open flame or electric sparks close to the battery. Do not smoke or use a match near the battery.**
- **When working on the batteries, be sure to remove any metal accessories from your arms. Do not lean over the battery.**
- **Improper use of jump cables when jump starting a vehicle with a dead battery can cause the battery to explode, resulting in death or serious personal injury.**
  - **Never jump start a vehicle with a thawed or frozen battery, which can explode. A discharged battery can freeze at temperatures of approximately 32°F (0°C). Always replace a frozen battery or a thawed battery.**
  - **When a vehicle battery is jump started, it gives off hydrogen gas, which is highly explosive. Always keeps fire, sparks and open flame far away from a vehicle battery. Never smoke while jump starting a vehicle. Never use a cellular telephone while connecting or disconnecting jumper cables.**

- **Jump-start batteries only in well-ventilated areas.**
- **Always route jumper cables so that they cannot interfere with or get caught in any moving parts in the engine compartment.**
- **Never short out battery terminals by connecting the positive terminal (+) and negative (–) terminals with each other.**
- **Never connect the negative cable from the booster vehicle directly to the negative terminal of the discharged battery. It may cause hydrogen gas given off by the discharged battery to explode.**
- **Never attach the negative (–) cable from the booster vehicle to any part of the fuel system, brake hose or brake lines.**
- **Never allow the non-insulated parts of the battery clamps of the booster cables to touch.**
- **Never allow the jumper cable attached to the positive (+) battery terminal to contact metal parts of the vehicle.**
- **Always follow the instructions of the jump cable manufacturer.**
- **Always wear proper eye protection.**

**⚠ CAUTION**

- **Be sure to confirm that the vehicle with the battery to be used as the booster battery has a 12 V battery. Otherwise, both vehicles may be damaged.**
- **Connecting jumper cables improperly can cause a short circuit and damage the vehicle's electrical system.**
- **Never let the vehicles touch each other while the jumper cables are connected. If the vehicle touch, electrical current may flow between the vehicles when the positive (+) terminals are connected, causing electrical system damage.**

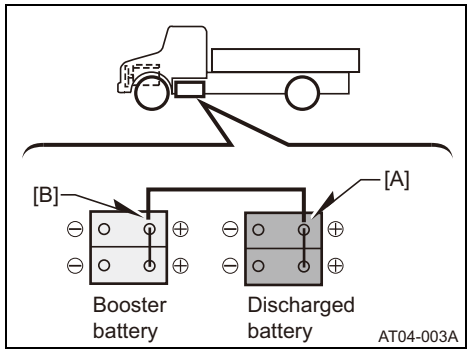


Fuel tanks and accessories to be installed on the chassis frame are installed on the inside of the chassis frame.

**PROCEDURE FOR JUMP STARTING**

1. Turn off the engine on both the vehicle with the battery to be used as a booster battery (“booster battery”) and the discharged battery.
2. Confirm that the booster cables do not have loose or missing insulation and connect the booster cables correctly as shown in the following illustration.
3. Firmly connect one end of the red booster cable to the positive (+) terminal of the discharged battery [**A**], and then the other end to the positive (+) terminal of the booster battery [**B**].

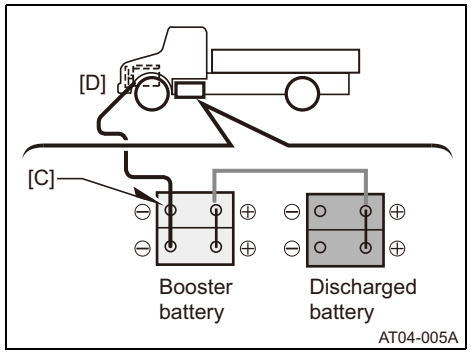


4. Connect one end of the black booster cable firmly to the negative (–) terminal of the booster battery [**C**]. Finally, connect the other end to an engine ground [**D**] away from the discharged battery.

5. After you finish connecting the cables as described above, start the engine of the vehicle with the discharged battery. If the engine will not start in cold weather, first, run the engine of the vehicle with the booster battery for a few minutes to fully charge its battery. Then stop the engine of the vehicle with the booster battery and start the engine of the vehicle with the discharged battery.
6. After the engine of the vehicle with the discharged battery has started, remove carefully remove the black booster cable from the negative (–) terminal of the booster battery [**C**] and then remove the red booster cable from the positive (+) terminal of the discharged battery [**A**] in reverse order while the engine on the vehicle with the discharged battery is idling.

## Installation of a battery disconnect switch

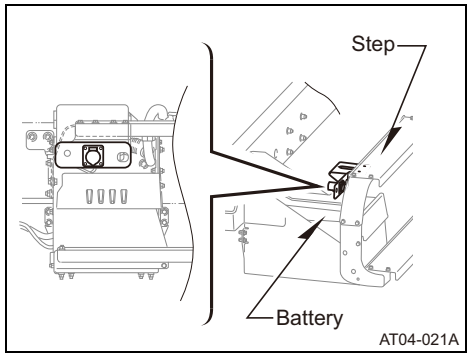


If you wish to install a battery disconnect switch, you can use a hole in the chassis, illustrated above, for installation.

**⚠ WARNING**

- **Installation of the battery disconnect switch on the power supply circuit for the DPR and/or DEF-SCR system may damage or result in the malfunction of the DPR and/or DEF-SCR system. Be sure to contact your Hino dealer before installation of the battery disconnect switch.**
- **Never connect the positive (+) end and negative (–) end of the battery disconnect switch together to prevent an explosion of the battery causing serious personal injury.**
- **When you remove the battery ground at the time of maintenance or repair, be sure to remove the battery ground cables.**
- **When you disconnect the battery terminals, see and follow the precautions offset forth on page 6-78 “Battery”.**

### Damaged tires—

**⚠ WARNING**

- **Damaged tires cannot provide maximum control and braking performance.**
- **Never drive with a damage tire which can lead to loss of vehicle control, sudden tire failure, including blowouts and sudden deflation and crashes leading to death or serious personal injury.**
- **If, when driving, a tire on your vehicle becomes flat, or damaged, immediately stop as soon as it is safe to do so, pull the vehicle off the road, paying attention to other traffic, and park the vehicle on a level and safe place. Apply the parking brake firmly, turn on the hazard warning light and then stop the engine. Contact your Hino dealer or tire experts to have flat tires repaired or replaced.**
- **Never inflate a tire above the maximum pressure shown on the sidewall of the tire. An over inflated tire contains air under high pressure. Driving with an over inflated tire may result in premature wear of the tire and loss of the control of the vehicle, resulting in death or serious injury in an accident.**
- **The maintenance of a damaged tire and wheel requires the use of proper tools, safety equipment, and tire service experts. If you have a flat tire or other tire damage, have the tire repaired or replaced by your Hino dealer or tire experts.**
- **If you are required to remove or install a tire or wheel by yourself in an emergency, heed the following precautions.**

### —Loosening wheel nuts

**⚠ WARNING**

- **Before beginning to loosen wheel nuts, be sure your vehicle is parked on a level and solid place. Otherwise, the vehicle may move or fall off the jack and roll over or fall on you or others which could result in death or serious injury.**
- **Before using the jack make certain that the engine is off. Never restart the engine if the vehicle has been lifted by the jack.**
- **Confirm that no one remains in the vehicle before jacking begins.**

1. **Set the parking brake firmly.**
2. **If you are going to loosen a front tire, block all the rear wheels. If you are going to loosen a rear tire, block all the front wheels.**
3. **Loosen all the wheel nuts by using a wheel wrench. Do not remove the nuts yet. Just unscrew them.**

***NOTICE:***

*To get maximum leverage, fit the wheel wrench to the nut so that the handle points to the back of the vehicle. Use your body weight fully to press down on the end of the handle. If necessary, use an appropriate extension bar to apply additional leverage to the wheel wrench. Be careful that the wheel wrench does not slip off the nut.*

**—Jack-up the vehicle**

**⚠ WARNING**

- **Read and follow all of these instructions. Improper jacking up of the vehicle can result in serious injury or death.**
- **Never get under a vehicle when it is supported without jack stands. Getting under a vehicle while it is jacked up is dangerous. If the vehicle falls off the jack, you could be seriously injured or killed.**
- **Lifting your vehicle with the jack improperly positioned may cause the vehicle to fall off of the jack and can damage the vehicle. To help avoid personal injury and vehicle damage, be sure to fit the jack lift head into the proper location indicated in the following instructions before lifting the vehicle.**
- **When you need the vehicle jacked up for a long period of time, place jack supports under the vehicle.**
- **If some lubricant such as oil has adhered to the jack-up point or the jack head, wipe it off completely before using the jack to reduce the possibility that the vehicle will fall off the jack.**
- **Do not use more than two jacks at the same time to jack up the vehicle.**
- **Do not lift the vehicle higher than necessary.**
- **Use the jack only for the replacement of a flat tire. Death or serious injury may result from improper use of the jack.**

**4. Jack-up points of your vehicle are indicated by the areas highlighted in the following illustrations. Position the jack at the jack-point as shown.**

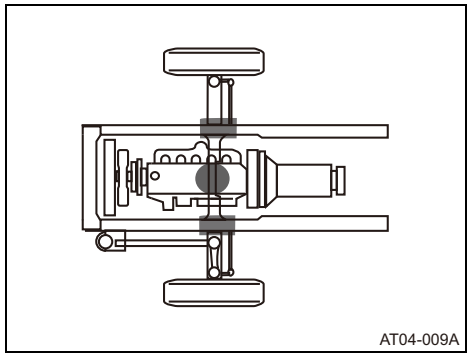


**Front axle**

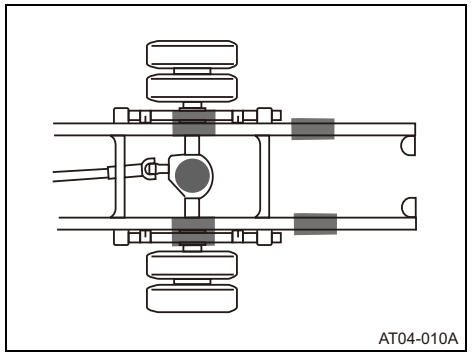


**Rear axle**

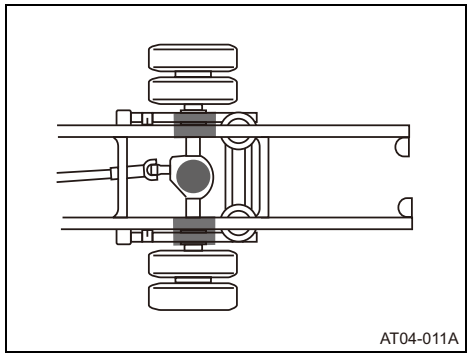


**Rear axle (with air suspension)**

5. **Lift the vehicle off the ground to a sufficient extent so that there is enough room for the replacement of the flat or damaged tire and with a spare tire and wheel.**
6. **Remove the wheel nuts previously loosened and remove the flat or damaged tire and wheel.**

If your vehicle has dual rear wheels and both an inner and an outer tire go flat, first remove the outer wheel nuts and the outer tire and wheel. Then remove the inner wheel nuts and the inner tire and wheel.

### —Installing tire and wheel

7. **Before installing a tire and wheel, remove any rust or dirt from the mounting surface of the new disc wheel, and the wheel hub, the wheel bolts and nuts on the new disc wheel. If your vehicle is equipped with a full air brake, also clean the brake drum and if equipped with dual rear wheels, also clean the wheel nut seats.**

**⚠ CAUTION**

**Rust or dirt on a wheel or fasteners could result in wheel nuts become loose and the wheel could come off while driving, resulting in death or serious injury in an accident.**

Visually check the threads of wheel bolts and nuts for any wear or damage, and also check the wheel disc to determine whether it has a crack or a bend. Have all wheel bolts and nuts replaced if you find any single one worn, damaged, cracked or bent.

**8. Apply engine oil or grease to the threads of the wheel bolts, the wheel nuts, and the crowns of the wheel nuts.**

**9. Install the wheel nuts on the tire.**

Lift up the wheel by using a tire lever and align the bolt holes of the wheel with the wheel bolts.

First, install the wheel bolts on the top bolt hole on the wheel and then install the wheel bolts on the other bolt holes.

Reinstall the wheel nuts and tighten them as much as you can by hand.

Press the tire and tighten nuts more if you are able.

**10. Fully lower the vehicle.**

**11. Tighten the wheel nuts firmly.**

The proper tightening sequence (1 through 8 or 1 through 10) is shown in the following illustration. Go through the sequence three times, gradually and evenly increasing the torque on each nut each time until the specified torque is reached. Be sure to use the crisscross method as shown in the illustration.

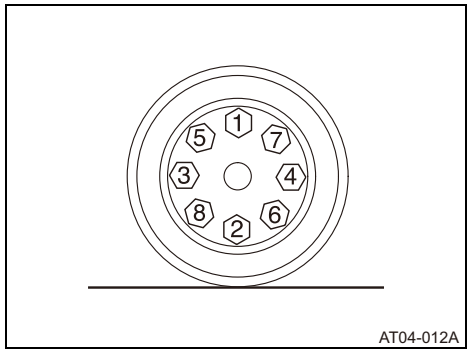


**8-nut type**

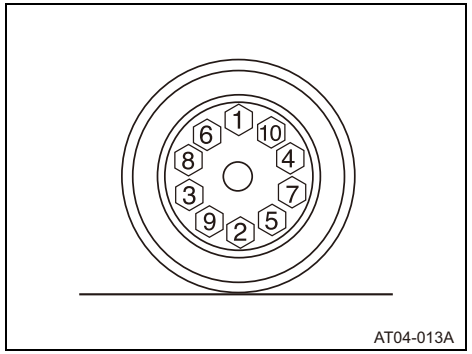


**10-nut type**

**⚠ WARNING**

**Be sure to use a torque wrench to tighten the wheel nuts with the proper torque. Wheel nuts that are improperly or incorrectly tightened can cause the wheels to become loose or come off the vehicle, resulting in death or serious injury in an accident.**

**Tightening torque:** N·m (lbf·ft, kgf·cm)
610—665 (450—490, 6,200—6,800)

**When changing dual rear wheels:**

If your vehicle has dual rear wheels, install the inner wheel and outer wheel. Then, tighten all the nuts in accordance with the sequences referred to in the above illustration.

**If your vehicle have a flat tire**

If your vehicle have a flat tire when driving, pull off the road and stop the vehicle in a safe place. and contact your Hino dealer.

## Towing

Before beginning to tow your vehicle, make certain that the parking brake is released. If your vehicle is equipped with full air brake and the air system fails for some reason, the parking brake may not be released by air pressure. In such a situation, release the parking brake in accordance the manual parking brake releasing procedures on page 4-15.

**⚠ WARNING**

- **Your vehicle should be towed by a professional towing service with proper equipment and sufficient skill. Make certain the professional towing service contacts your Hino dealer if they have any questions about towing the Hino vehicle.**
- **After you have manually released the parking brake, be sure to have you parking brake restored by your Hino dealer.**

**Your vehicle should be towed by a professional towing service with proper equipment and sufficient skill. When the towing service arrives, let the tow operator know that this manual contains towing instructions. Specific towing instructions are as follows:**

**⚠ WARNING**

- **Serious Internal transmission damage can result from improper vehicle towing.**
- **For models equipped with a 4-inch extended bumper with hooks on the left and right sides of the front of the vehicle, be sure to use the hooks on both sides. Do not use only one hook on either side to tow, as this could damage the hook.**

1. Make sure that the both right and left rear axle shaft of the vehicle to be towed are removed before it is towed.
2. Use a tow-bar in towing the vehicle. Start towing slowly to minimize shock to the vehicle and its components.

3. Make sure that the engine of the towed vehicle is kept running. If the engine is off, no compressed air will be available for the brakes (full air brake type). This is dangerous, as the brake system does not function at all. In addition, the power steering system will not function. The steering wheel, therefore, will become unusually hard to turn, making it impossible to control the vehicle properly.
4. Make sure that the key is kept in the "**ON**" position.
5. If the engine of the towed vehicle does not work, make sure that the vehicle is towed by a vehicle designed for that purpose. Make sure that it is not towed by any other type of vehicle as it can be very dangerous.
6. When the differential gear or rear axle shaft does not work, remove both the right and left rear axle shafts. Note that the engine brake and parking brake cannot be applied if the axle shaft has been removed.
7. Always tow the vehicle at a speed of less than 18 mph (30 km/h).
8. If towing an automatic transmission vehicle, lift the rear wheels.

**FRONT END TOWING**
**(With the front wheels raised off of the ground)**

When towing from the front end with the front wheels raised off of the ground, remove the rear axle shafts to protect the transmission and differential gears from being damaged. The hub openings should be covered to prevent the loss of axle lubricant or the entry of dirt or foreign matter.

After being towed, check and refill the rear axle housing with lubricant, if necessary.

**⚠ CAUTION**

**Fit a protection bar against the lower edge of the bumper, and put a wood block under the frame near the No.1 cross member when attaching the chain. Never lift or tow the vehicle if the chain is in direct contact with the bumper. Further, in order to protect the front license plate and bumper, remove the license plate together with its bracket.**

### REAR END TOWING

When being towed with the rear wheels raised off the ground, fasten and secure the steering wheel in a straight ahead position.

### When the vehicle gets stuck in loose sand, ice or snow; freeing the vehicle

**⚠ WARNING**

**Do not spin the vehicle's wheels excessively when try to free the vehicle from loose sand, ice or snow. Excessive wheel spin may cause damage to the power train including the transmission, rear axle, and tires and can result in personal injury and/or property damage.**

Wheel spin reduces vehicle traction. When your vehicle gets stuck in loose sand, mud, snow or ice, wheel spin should be kept to a minimum by not unnecessarily pressing down on the accelerator pedal.

For manual transmission models, shift the gearshift lever alternately from "**second**" to "**reverse**" and rock your vehicle back and forth. For automatic transmission models, shift the selector lever alternately from "**D**" to "**R**".

### Engine Overheating

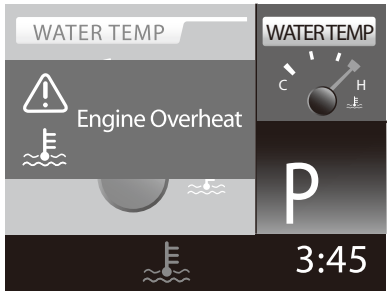


AT04-014A

**⚠ WARNING**

**Never remove the radiator cap while the engine and the cooling system are still hot.**

**If you remove the radiator cap immediately after the engine is shut off, scalding fluid and steam under high pressure will blow out which may result in serious burns or injury.**

The engine is overheated when the coolant temperature gauge in the instrument cluster of your vehicle is in the red zone. If the engine overheats, take the following measures:

- Safely pull the vehicle off of the road and stop it in a safe place. Apply the parking brake firmly and place the gearshift lever in neutral position (for manual transmission) or place the selector lever in "**P**" position (automatic transmission with "**P**" position) or "**N**" position (automatic transmission without "**P**" position).
- Keep the engine running at idle speed.

Check for the cause of the overheating and contact your Hino dealer for further inspection and/or repair work, if necessary.

**See if the warning light ( ) on the instrument cluster of your vehicle is on.**

**If the warning light is on:**

**1. Check if there is insufficient coolant.**

Check the hoses of the radiator and connections between the radiator and the engine to determine whether they have cracks, loose clamps or leaks. If you find cracks, loose clamps or leaks, contact your Hino dealer.

**2. If there are no cracks, loose clamps or leaks:**

Refill the coolant with the reservoir tank. See "Engine coolant" on page 6-5. After refilling, check whether the warning light goes off. If the warning light goes off you can resume driving. If the warning light does not go off, contact your Hino dealer.

**If the warning light is off:**

1. Check to determine if the drive belts of the cooling fan (which is located between the radiator and the engine) is positioned correctly. If the cooling fan does not work, contact your Hino dealer.
2. Check the radiator core for any clogging. If the radiator core is clogged, flush the radiator core after the radiator core gets cold.
3. If you find the radiator is in good conditions, the temperature of the engine will return to normal with the engine running at idle speed. You can then continue driving.
4. If the temperature of the engine does not return to normal with the engine running at idle speed, contact your Hino dealer to repair.

### How to release the parking brake manually

If your vehicle is equipped with a wheel parking brake system and when the parking brake will not release due to air system problems, you may release the parking brake manually.

**⚠ WARNING**

- **Never disassemble the parking brake chamber. The spring cylinder in the parking brake chamber is not designed to be disassembled, and it stores a highly compressed spring which may injure you severely when the parking brake chamber is disassembled. If you need any adjustment or service to the chamber, do not try to do it by yourself and contact your Hino dealer.**
- **Do not use the following procedure except you are required to move the vehicle in an emergency. Once you release the parking brake manually, you cannot apply the parking brake again by yourself. Contact your Hino dealer to have the parking brake restored after this procedure.**

**⚠ CAUTION**

**Before releasing the parking brake manually, block all wheels of the vehicle so that the vehicle does not move.**

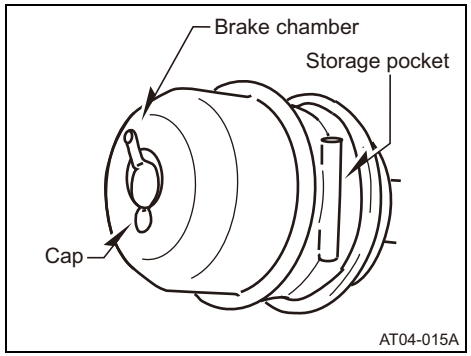


**1. Remove the cap from the brake chamber.**

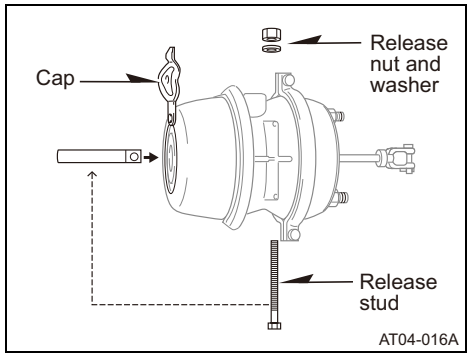


**2. Remove the release stud from the storage pocket of the brake chamber by removing the release nut and washer from the release stud and slide the release stud out. See illustration above.**

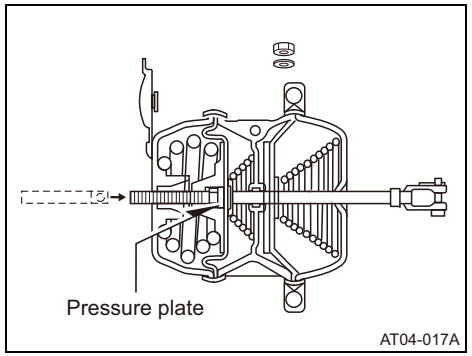


**3. Insert the release stud through the opening (where the cap was removed) into the spring chamber until the bottom of the release stud stick out. See illustration above.**

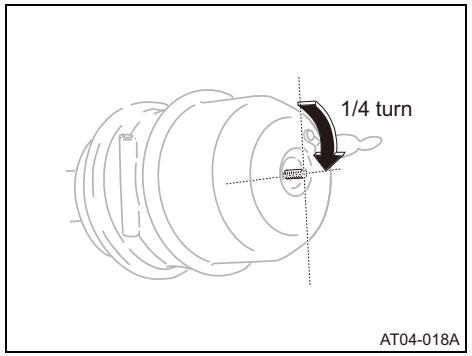


**4. Turn the release stud clockwise about quarter (1/4) turn and then confirm that the stud will not pull out.**

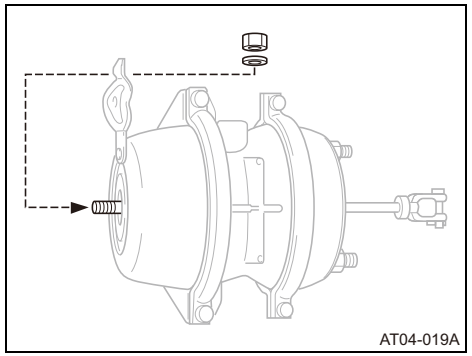


**5. Insert the washer and nut onto the release stud, as illustrated above. Tighten the nut with a torque wrench with the torque specified below until the compression spring is fully caged. While doing so, visually check that the push rod behind the brake chamber is retracting. Do not over tighten the release stud beyond the specified torque.**

**S-cam type maximum torque:**
67.8 N·m (50 lbf·ft, 691 kgf·cm)

**6. Release the parking brake.**

H1-A038E01.book 18 ページ ２０１６年１０月１９日 水曜日 午後５時２６分

H1-A038E01.book 1 ページ ２０１６年１０月１９日 水曜日 午後５時２６分

# SECTION 5

## CORROSION PROTECTION AND APPEARANCE CARE

Cleaning the interior of the cab ..... 5-2
Washing and waxing the vehicle ..... 5-4
Corrosion protection ..... 5-6

Read the entire manual before using the vehicle. Failure to follow instructions, warnings and safety precautions could result in death, serious injury and/or damage to the vehicle.

## Cleaning the interior of the cab

### INTERIOR

**⚠ WARNING**

- **Never spill water or any liquid on the electrical components inside the cab of the vehicle. Electrical components can be short-circuited, resulting in a fire.**
- **Never use chemical solvents such as paint thinner (petroleum distillate), gasoline or benzene to clean your vehicle. These solvents are harmful or fatal if swallowed. These solvent are also flammable and are harmful and may irritate eyes, mucous membranes and skin on contact, and may cause other injuries as well. Use of these solvents may also cause the plastic and rubber parts of your vehicle to deteriorate.**
- **When cleaning the interior (especially instrument panel), do not use polish wax or polish cleaner. The instrument panel may reflect off the windshield, obstructing the driver's view and leading to an accident, resulting in death or serious injury.**

**⚠ CAUTION**

- **Always follow the manufacturer's instructions when detergents or vinyl cleaners are used for cleaning the interior of the cab.**
- **When cleaning the interior, do not use polish wax or polish cleaner. The instrument panel's or other interior part's painted surface may be damaged.**

The surface of the interior of the cab is made of plastic which could by damaged by certain cleaners. Check the cautionary information provided by the cleaner supplier. Only choose a cleaner that can be used on plastic.

When cleaning the vinyl upholstery, use a mild soap or detergent and water, and observe the following procedures.

1. Remove dust and loose dirt from the surface of the vinyl upholstery with a vacuum cleaner or a soft brush.
2. Wipe the surface of the interior with a sponge or soft cloth soaked with mild soap or detergent and water.
3. Allow the washed surface to begin to dry for a few minutes. Then wipe the detergent from the surface of the vinyl upholstery with a clean cloth.
4. If the traces of the detergent remain, wipe again with a clean cloth.
5. Allow the vinyl upholstery to dry completely in a shaded and ventilated area.

## SEAT BELTS

**⚠ WARNING**

- **Damage to seat belts reduces their overall effectiveness and increases the risk of serious personal injury and death when the vehicle is being used.**
- **Check the condition of all seat belts regularly.**
- **If you notice that the seat belt webbing, hardware, retractor, buckle or any other part is damaged, such as the webbing being worn or frayed, immediately contact your Hino dealer. Damaged seat belts must be replaced. They cannot be repaired.**
- **Never use chemical cleaning agents, bleach, dye, solvents, gasoline, or thinner to clean seat belt webbing or any other seat belt part. Such use could weaken the seat belt and may adversely affect the performance of the seatbelts.**
- **After cleaning the seat belts, given them time to dry completely before allowing them to retract, as moisture can damage the retractor and prevent it from working properly.**

1. To clean, wipe the seat belt webbing with a sponge or soft cloth soaked with mild soap or detergent and lukewarm water.
2. Wipe out the detergent from the seat belt webbing with a clean cloth.
3. If the traces of the detergent remain, wipe again with a clean cloth.

Allow the seat belts to dry completely in a shaded and ventilated area before you use it.

## WINDSHIELDS

**Wash the windshields with the water. Use glass cleaner if necessary.**

Never use abrasive cleaners on the windshield abrasive cleaners can scratch the windshields.

When using a spray type cleaner, take care not to spray other parts than the windshields.

If other parts are sprayed wipe them off with a soft cloth as quickly as possible.

## Washing and waxing the vehicle

### Washing the vehicle

**To keep your vehicle looking new, regular washing and polishing are very helpful.**

The exterior of the cab can be cleaned using the following procedures.

1. Wash the hood and cab with water, and then gently wipe with a soft cloth, sponge, or soft brush.
2. If the dirt cannot be removed, use mild soap for washing. After you wash away the dirt, thoroughly flush the soap with water.
3. Wipe off the exterior to dry it.

**⚠ CAUTION**

**Do not use hot water for cleaning as it can result in personal injury and/or property damage.**

***NOTICE:***

*Do not wash the hood and cab under direct sunlight to prevent water stains on the coated surface.*

### Waxing the vehicle

**Waxing should be done according to the following procedures:**

Before waxing, wash and dry the hood and cab according to the above procedures.

**⚠ WARNING**

**To avoid severe burns or injuries, never use volatile and flammable solvents such as gasoline or thinner to clean the vehicle.**

**⚠ CAUTION**

- **Be careful you don’t slip when stepping on the front bumper when you are washing and waxing the vehicle.**
- **Be sure to observe the cautionary information provided by the wax supplier.**

### Underbody cleaning

**⚠ WARNING**

**Sharp edges on the underbody of the vehicle can cause cuts to exposed skin on the arms and hands. Always protect your hands and arms from cuts on sharp metal edges when cleaning the underbody and the inside of the wheel housings. Be sure to wear safety glasses or goggles to protect your eyes before working.**

**Washing the underside of the vehicle is important in maintaining proper condition of the vehicle.**

**⚠ WARNING**

**Splashing water around the brake system may result in reducing the braking force. Whenever you have washed underside of your vehicle, be sure to step on the brake pedal for several times before you start driving, and check air brake sounds is the same as normal.**

When you wash the underside of the vehicle, use running water to flush away dirt and other foreign materials. During the washing, pay particular attention to areas where mud and dirt may gather.

**⚠ CAUTION**

- **If you use a high-pressure washer, do not allow the spout of the washer to be too close to the painted surface of the vehicle in order to avoid damage to the painted surface.**
- **Never pour water onto electric components of the vehicle to avoid malfunction of such components.**

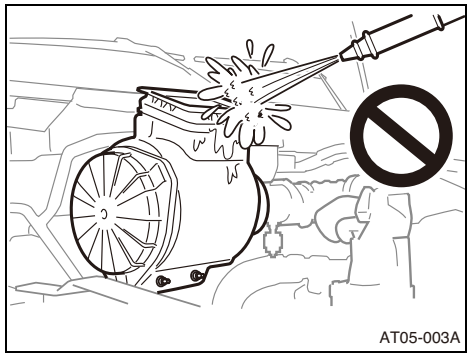
AT05-003A

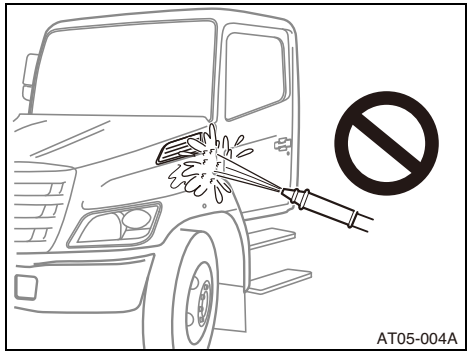
AT05-004A

**⚠ CAUTION**

**Never pour water into the air intake port when washing to avoid malfunction of the air intake system.**

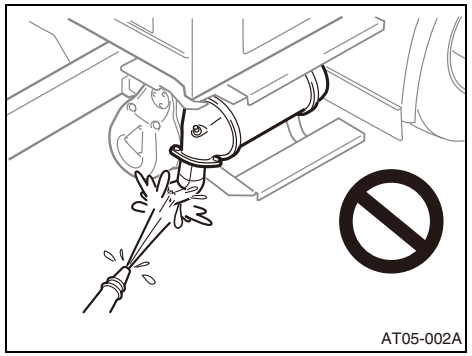
AT05-002A

**⚠ CAUTION**

**Do not put water inside of the exhaust system directly from the opening of the tail pipe. Doing so may damage the catalyst and sensors.**

## Corrosion protection

To protect the vehicle from corrosion, be sure to wash the vehicle periodically, at appropriate intervals. Wash the vehicle to remove all salt, especially after the vehicle has been operated on salty roads in a coastal area or in a snowy area where road salt is used. Wash off the mud and snow gathered on the underside of the cab and chassis since the mud and snow contains the salt which could accelerate vehicle corrosion.

***NOTICE:***

- *Corrosion is accelerated by salt, calcium chloride, anti freezing agents and other substances on the ground and roadways. If you drive on ground or roadway containing such substances, wash the vehicle frequently. Insects, tree sap, bird droppings, fertilizer, soot, industrial pollutants and other substances may also damage the paint of the vehicle and accelerate corrosion. Wash the vehicle immediately to remove these substances.*
- *Promptly repair any damage or scratches on the painted surfaces. Use touch up paint as necessary.*
- *Dampness or accumulated dirt under the floor mats can cause corrosion of the metal floor pan. Check under the floor mats frequently and clean and dry when necessary.*

H1-A038E01.book 1 ページ ２０１６年１０月１９日 水曜日 午後５時２６分

# SECTION 6 – 1

## MAINTENANCE

### Daily inspection

Scope of regular maintenance ..... 6-2
Maintenance procedure ..... 6-3
Starting the engine ..... 6-25
After starting the engine ..... 6-25

Read the entire manual before using the vehicle. Failure to follow instructions, warnings and safety precautions could result in death, serious injury and/or damage to the vehicle.

To ensure safe and proper operation of your vehicle, daily maintenance, discussed in this section, and periodic maintenance, discussed in the following section, is essential. It is the owner's responsibility to perform regular checks of your vehicle.

## Scope of regular maintenance

Regular Maintenance in this DRIVER'S/OWNER'S MANUAL comprises **Daily inspection** (Section 6-1), which should be performed both before and after daily operation of the vehicle, and **Periodic maintenance** (Section 6-2), which should be performed periodically at certain intervals, time frames or at a certain mileage. Failure to perform the Regular Maintenance required may invalid the warranty coverage for your vehicle.

**⚠ WARNING**

**You can be seriously injured and the vehicle could be damaged if you try to do service work on a vehicle without knowing enough about it. Be sure to read and observe any and all instruction and/or cautionary information in this section and in the following section and be sure that you have sufficient knowledge, experience, the proper replacement parts, and tools before attempting any Regular Maintenance.**

- Be sure to use the proper nuts, bolts, and other fasteners. Inch and metric fasteners can be easily confused. If the incorrect fasteners are used, parts can later break and or fall off.
- Never wear accessories, watches, ties, loose hanging jewelry and loose clothing which could get caught on parts while working on the vehicle.
- Bind long hair securely behind the head so that it does not interfere with the components of the vehicle.
- When you park the vehicle for inspection, apply the parking brake firmly and block all wheels unless otherwise instructed in this manual.
- To avoid serious burns or injury, keep yourself away from the metal parts which could be very hot such as the engine, exhaust manifold, radiator, muffler, exhaust pipe and tail pipe.
- Keep yourself, your clothing and belonging away from moving parts of the vehicle such as the cooling fan and drive belts.

- Always turn off the engine and remove the key from the starter switch unless otherwise instructed in this manual.
- If you have to turn on the engine after the hood is raised (tilted), make sure that the parking brake is firmly applied, all wheels are blocked, and place the gearshift lever in neutral position (for manual transmission) or place the selector lever in "**P**" position (automatic transmission with "**P**" position) or "**N**" position (automatic transmission without "**P**" position) before starting the engine.
- Turn on the engine only in a well-ventilated area to avoid inhaling exhaust gas.
- Electric current flows through the battery cable and starter cable. Be careful not to cause short circuit which can result in personal injury and/or property damage.
- Take utmost care when working on the battery. It contains corrosive sulfuric acid harmful to the body. Wear safety glasses or goggles to protect your eyes before working.
- Be careful not to leave any tool in the engine compartment. The tool may be hit by the vehicle components when they are activated and you may be injured.
- Be careful not to damage lines, connectors, and harnesses by standing on them.
- Periodically take your vehicle to your Hino dealer for inspection and vehicle service.
- Only use tools, parts and accessories designated by Hino for Regular Maintenance.

**Maintenance procedure—**

Check the engine before driving the vehicle.

## —Engine oil

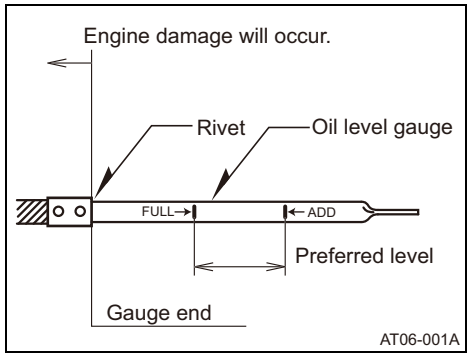


The engine oil level should be kept between the "**FULL**" and "**ADD**" marks.

Check the engine oil level when the engine is at operating temperature because the oil will not reach the oil pan fast enough to provide a true indication of the oil level if the engine is cold.

**⚠ WARNING**

- **Do not operate the vehicle with the oil level below the "ADD" mark. Otherwise, the engine could be damaged.**
- **Do not operate the vehicle with the oil level over the "FULL" mark. Otherwise, oil consumption may increase and the purification function of the exhaust emission system could deteriorate.**
- **Be careful not to spill engine oil on the exhaust system, spilling the engine oil on the hot exhaust system or the electric system may cause fire.**

### CHECK THE ENGINE OIL LEVEL BY USING THE DIPSTICK

1. Park the vehicle in a safe place on level ground and turn off the engine with the engine at operating temperature and apply the parking brake firmly.
2. Wail at least 10 minutes for the oil to drain back into the oil pan.
3. Pull out the dipstick and wipe it clean with a clean cloth.
4. Reinsert the dipstick fully and pull out the dipstick again.
5. Check the oil level on the dipstick.
6. Wipe the dipstick with a clean cloth and reinsert the dipstick fully.

**ADD ENGINE OIL**

If the oil level is below or near the “**ADD**” mark, add engine oil in accordance with the following procedures up to the “**FULL**” mark.

The quantity of oil to be added when the oil level is on the “Add” mark is as follows.

| US Qt | Liters |
|---|---|
| 3.6 | 3.4 |

1. Remove the oil filler cap, turning it counterclockwise.
2. Add engine oil slowly.
3. Check the oil level on the dipstick. See above.
4. Reinstall the filler cap, turning it clockwise.

**ADJUST ENGINE OIL**

If the oil level is over the “**FULL**” mark, adjust the engine oil by draining the engine oil in accordance with the procedures described on page 6-65.

## —Engine coolant

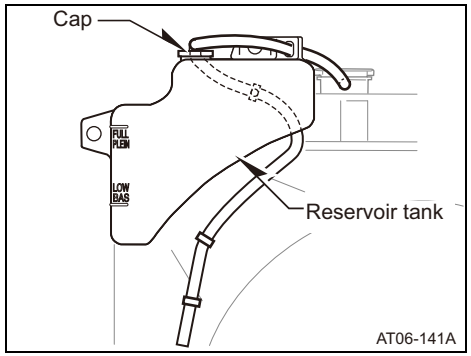


Due to the nature of the Long Life Coolant (LLC), sediment from the coolant accumulates in the reservoir tank. This accumulation of sediment does not affect the quality of the LLC.

**⚠ CAUTION**

- **Before checking the coolant level, wait until the engine and radiator are completely cooled down.**
- **Do not remove the radiator cap when replenishing the coolant from the reservoir. Otherwise, the coolant under high pressure could overflow from the opening for the radiator cap.**
- **Do not operate the vehicle with the coolant level low. Otherwise, the engine could be damaged.**
- **If you use Long Life Coolant (LLC), be sure to use Hino genuine Long Life Coolant.**
- **Frequent drops in the coolant level within a short time after replenishing indicates possible leakage of engine coolant from the cooling system. Visually check the radiator, hoses, reservoir cap, radiator cap, drain cock and water pump for any leaks of the coolant. If you cannot find a leakage, contact your Hino dealer.**
- **If the engine coolant level warning light turns on park the vehicle and inspect the coolant level in the reservoir in accordance with the following procedures.**

**—Power steering fluid level**

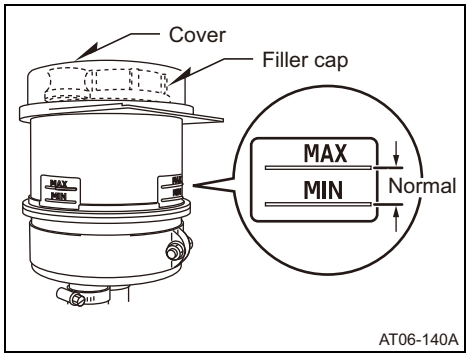

**⚠ WARNING**

- **Before checking the power steering fluid level, wait until the engine and reservoir are completely cooled down.**
- **Before checking the power steering fluid, clean all dirt off the reservoir and filler cap. Otherwise, the fluid may become contaminated and adversely affect the performance of the power steering system resulting in death or serious injury in an accident due to loss of control of the vehicle.**
- **Do not operate the vehicle with a low fluid. A low fluid level may cause damage or premature wear of the power steering system.**
- **Be sure to use the proper fluid (see "Table 7: Recommended lubrication" on page 6-105.)**
- **Never pour water onto reservoir and filler cap to avoid malfunction of the power steering system.**

**CHECK THE POWER STEERING FLUID**

1. Turn off the engine with the vehicle safely parked on level ground, apply the parking brake firmly, and wait until the engine and reservoir are completely cooled down.
2. Wipe the reservoir and filler cap clean with a clean cloth.
3. Check to determine if the power steering fluid level is between the "**MAX.**" and "**MIN.**" marks.
4. If the power steering fluid is on or near the "**MIN.**" mark, remove the filler cap and add the fluid up to the "**MAX.**" mark and install the filler cap securely.

**—Drive belts**

**⚠ CAUTION**

- **To avoid the engine overheating, be sure to check the wear, damages or fraying and movement of the drive belt in accordance with the following procedures.**
- **Be sure to turn off the engine before checking the drive belts. Otherwise, you may be injured by the drive belts, cooling fan or other moving parts of the vehicle.**

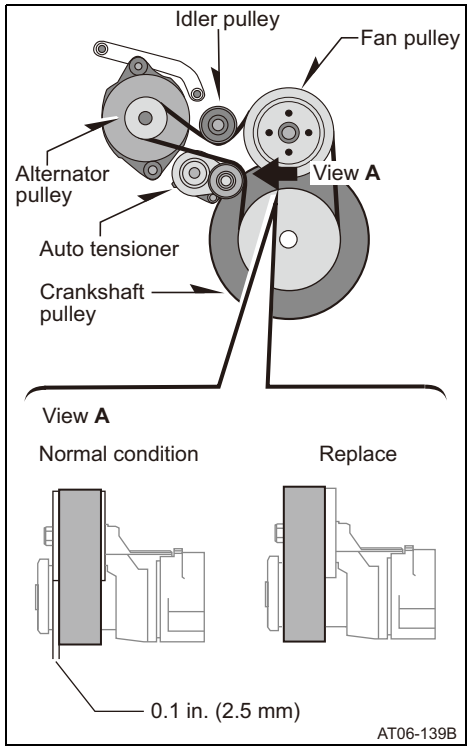


**Check the drive belt with the auto tensioner**

**Check the drive belt position on the pulley end.**

1. Turn off the engine with the vehicle safely parked on level ground and apply the parking brake firmly.
2. Visually check from "**View A**" if the drive belt position on the pulley of the auto tensioner is not seated properly at the pulley end or the drive belt is damaged. If the drive belt is not seated properly at the pulley end or the drive belt is damaged, contact your Hino dealer and have it replaced with a new one.

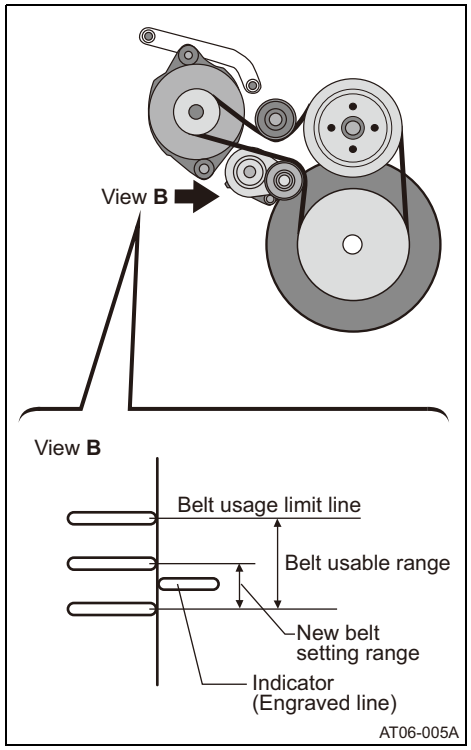


**Auto tensioner**

**Check the drive belt usable range**

1. Turn off the engine with the vehicle safely parked on level ground and apply the parking brake firmly.
2. Visually check from "**View B**" if the indicator (engraved line) of the belt tensioner is within the belt usable range as shown above. If the belt tensioner is out of the usable range, contact your Hino dealer and have the drive belt replaced with a new one.

**Check the movement of the drive auto-tensioner belt pulley**

1. Push down the belt, with your finger between the pulleys, with a constant force. Release the belt and check to see that the tension pulleys return to the original position by the spring force.
2. Replace the auto-tensioner;
   - If the pulleys do not move when pushing down the belt.
   - If there are any abnormalities in the motion of the pulleys.
   - If the pulleys do not return when the belt is released.

### —Air compressor drive belt

When a new air compressor drive belt is installed or the tension is adjusted, run the engine for several minutes after such installation or adjustment. Then check and adjust the tension again. Repeat this operation several times in order to adjust the drive belt accurately.

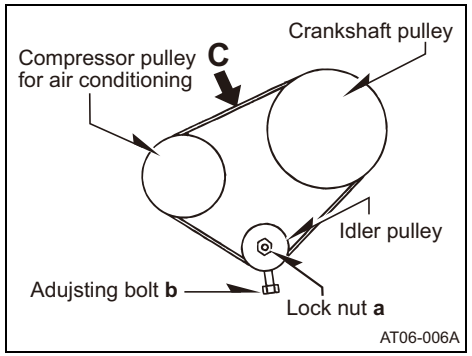


**Check air compressor drive belt**

1. Apply a load of 22 lb. (10 kg) with your finger or with the special tool (S0944-41210) on the point indicated as the arrow of "**C**" as shown in the illustration.
2. Measure the deflection of the air compressor drive belt and if the deflection is out of the permissible range (between 0.434 in. (10 mm) and 0.472 in (12 mm)), adjust the air compressor drive belt in accordance with the following procedure.
   1) Loosen lock nut a on the idler pulley as shown in the illustration.
   2) Turn the adjusting bolt **b** clockwise to increase the deflection and/or turn the adjusting bolt **b** counterclockwise to decrease the drive belt deflection so that the drive belt deflection becomes 0.434 in. (11 mm).
   3) After the adjustment of the drive belt deflection, securely tighten lock nut **a** and adjusting bolt **b** with a torque wrench.

**Tightening torque:**

| | N·m (lbf·ft, kgf·cm) |
|---|---|
| **Lock nut a:** | 41.2 (30, 420) |
| **Adjusting bolt b:** | 5.9 (4.4, 60) |

**—Air cleaner service indicator**

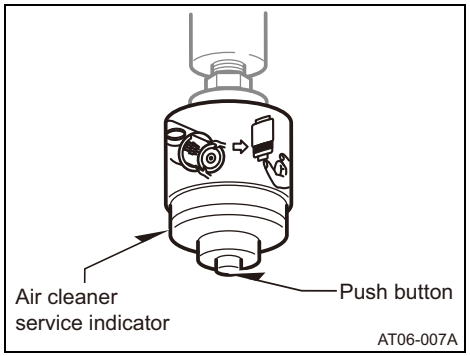


Check whether a red signal appears on the air cleaner service indicator of the air cleaner.

When the red signal appears, replace the air cleaner element in accordance with the following procedures.

## —Air cleaner

**⚠ CAUTION**

**Be sure to heed the following with respect to the maintenance of the air cleaner element. Otherwise the air cleaner may not work properly and the engine output may be reduced.**

- **Immediately replace the air cleaner element if the red signal appears on the dust indicator. Otherwise the air cleaner may not work properly and the engine output may be reduced.**
- **When replacing the air cleaner element, be sure to use and properly install a Hino genuine air cleaner element.**
- **Install new rubber seal and hose if they are broken. Be careful so that the rubber seal is not twisted when installed.**
- **Tighten the clamps for the rubber seal and hose if they are loosened.**

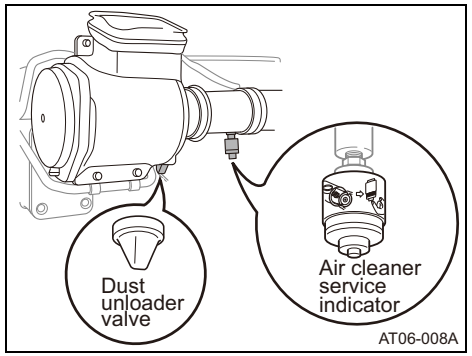


The above illustration shows the location of the dust indicator, which indicates when the air cleaner element is clogged, as well as the dust unloader valve that collects and disposes of dust automatically.

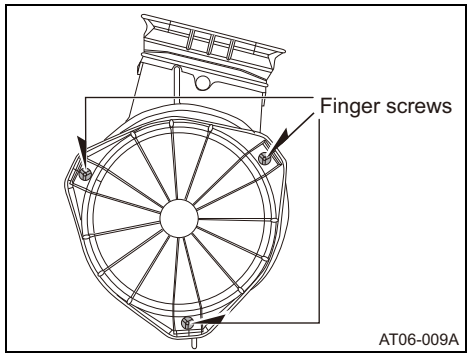


**1. Remove the three finger screws and carefully remove the cover.**

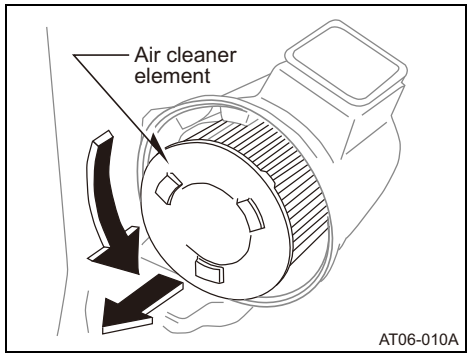


2. **Hold the outer projecting end of the air cleaner element and turn left slightly, and then detach the element.**

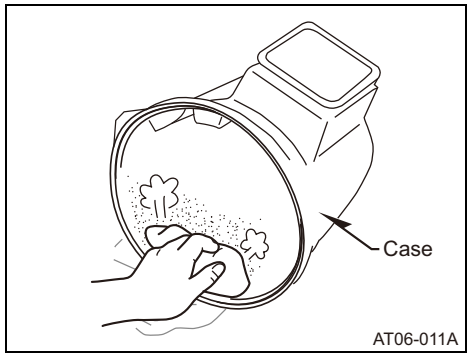


3. **Clean the case cover and the inside of the case with a clean and dry cloth.**
   **Do not wash the element with water.**

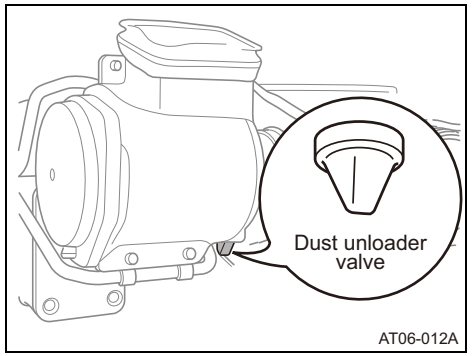


4. **Check that the dust unloader valve is not broken or missing and clean the dust unloader valve with a clean, dry cloth. Check that the rubber seal and hose are not broken and the clamps for the rubber seal and hose is not loosened.**
5. **Install the new element into the case.**
6. **Reset the case cover and install the three finger screws securely.**
7. **Press the push button located at the end of the dust indicator.**

## —Fuel filter

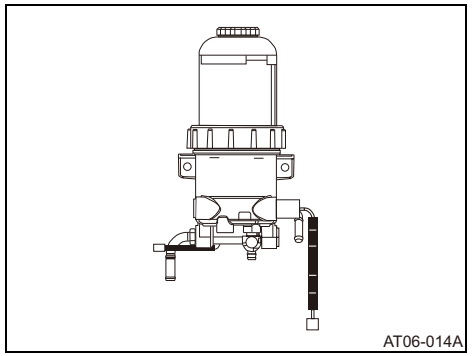


**CHECK THE FUEL FILTER**

The fuel filter with water separator is located at the left (driver) side in the engine compartment. Check the display to see if the fuel filter warning light comes on. If the fuel filter warning light comes on, drain the water from the water separator by following the procedures described on page 6-145.

## —Tires and wheel nuts

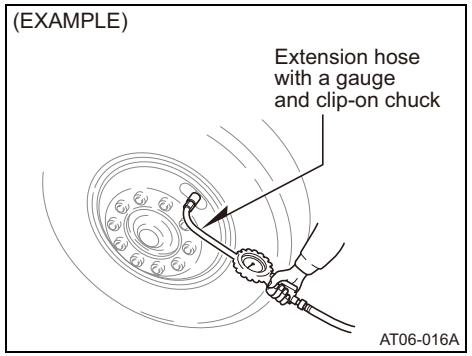


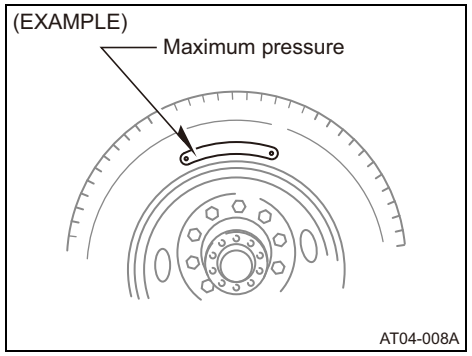


**Check tire inflation pressure**

**⚠ WARNING**

- **Always wear safety glasses to protect your eyes. Always keep your face away from the tire when working on the tire.**
- **Never inflate the tire above the maximum pressure shown on the sidewall of the tire. An over inflated tire contains air under high pressure. Driving with an over inflated tire may result in premature wear of the tire and loss of the control of the vehicle, resulting in death or serious injury in an accident.**
- **The maintenance of a damaged tire and wheel requires the use of proper tools, safety equipment, and tire service experts. If you have a flat tire or other tire or wheel damage, have repair or replacement performed by your Hino dealer.**

1. Check all tires for correct pressure by using an extension hose with a gauge and clip-on chuck so that you can stand to the side of the tire during checking.
2. Visually check tires for damage and excessive or abnormal wear.
3. If pressure loss or tire damage is noticed during checking, have the tires inspected or repaired by your Hino dealer.

**Cracking and damage of the tires**

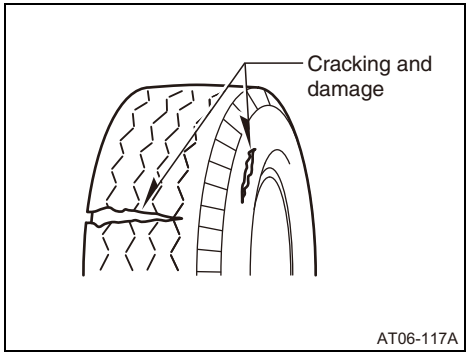


- Check the treads and the sides of the tires for any cracking or damage.
- Be sure that no foreign materials such as metal pieces, nails are embedded in the surface of the treads or the sides of tires. Also, check to see that no foreign materials such as stones are wedged between the dual tires.
- For details about replacement of the tires, see “Wheel nuts and bolts” on page 6-86.

**⚠ CAUTION**

**If the crack reaches the code or if the code is exposed, do not use the tire. The tire’s intended strength will not be retained and it might get damaged.**

***NOTICE:***

*If you find any defects in any tire, repair or replace the tire with a new one.*

**Abnormal wear of the tires**

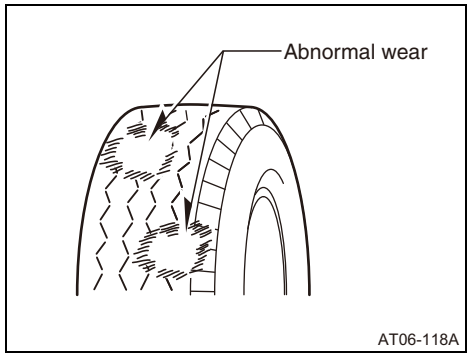


- Check the surface of tread for any abnormal wear.
- If you find any abnormal wear, have your vehicle checked by your Hino dealer.

**Groove depth of tires**

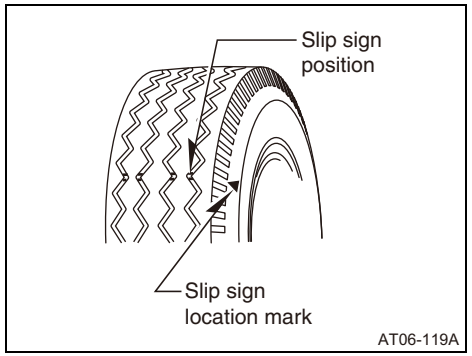


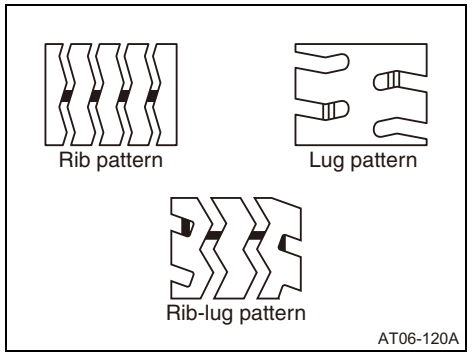


**Slip signs for different tire patterns**

- Check to see that enough depth of grooves are remaining on the tires.

**⚠ CAUTION**

**When the groove depth reaches 0.063 in. (1.6 mm), the slip sign mark appears at the tire slip sign location (▲ position). When the slip sign comes out, the tire becomes slippery and it is dangerous. Replace the tire with a new one.**

| Minimum groove depth |
|---|
| 0.063 in. (1.6 mm) |

- For details about replacement of the tires, see “Wheel nuts and bolts” on page 6-86.

**CHECK WHEEL NUTS**

1. Check that the wheel nuts are not missing or loosened.
2. If one or more of the wheel nuts are missing or loosened, have them replaced or tightened by your Hino dealer.

**—Steering linkage**

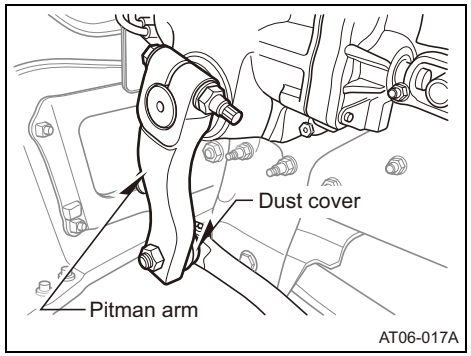


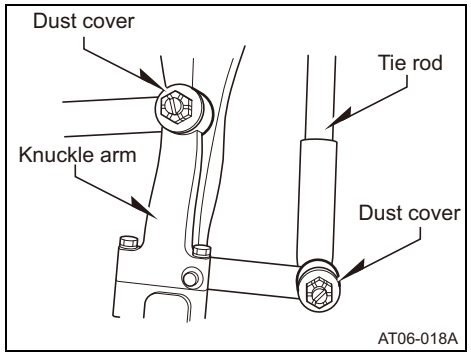

**Check the steering linkage**

1. Visually check the rod and arms for cracks or damages.
2. Visually check the dust covers (four in total) for cracks or damages.
3. If cracks or damages are noticed during the visual checking, have the steering linkage inspected or repaired by your Hino dealer.

## —Suspension

**Check the suspension**

Visually check the suspension for the conditions described below.

If any abnormalities are noticed during the visual checking, contact your Hino dealer to have them inspected or repaired.

- Loosened U-bolts.
- Broken leaf or leaves.
- Missing or loosened clip band bolts.
- Leakage of the oil from the shock absorbers.
- Damage on buffer rubbers.
- Lack of lubrication on rear spring sliding and spring helper.

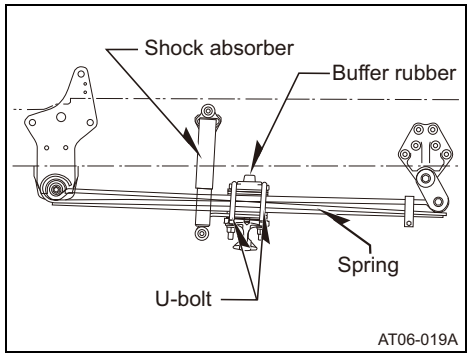


**Front suspension**

There are some variations for leaf spring rear suspension. The variations for leaf spring are:

**a**—standard

**b**—with shock absorber

**c**—with stabilizer

**d**—with shock absorber and stabilizer

Other optional equipment:

- with sub leaf
- with helper rubber

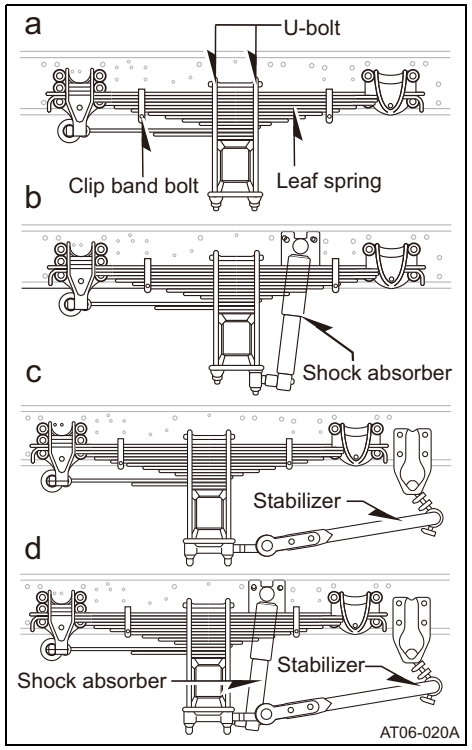


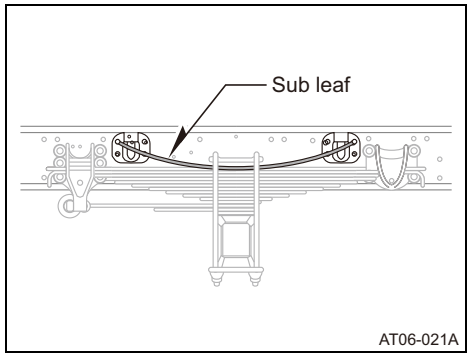


**With sub leaf**

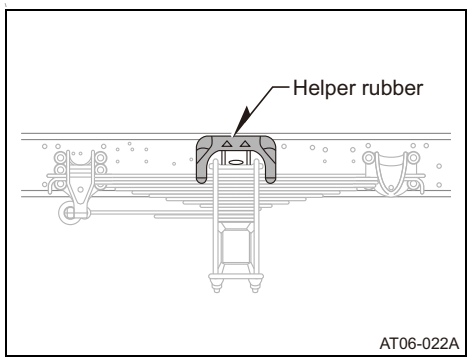


**With helper rubber**

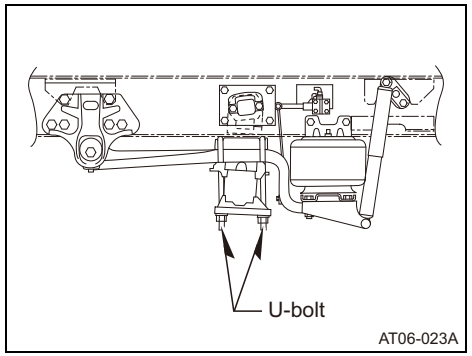


**Air suspension**

**Check the brake lines and hoses:**

1. Visually check brake lines and hoses for any damage and cracks.
2. Visually check brake lines and hoses for oil leaks (Hydraulic brake type only).
3. Visually check the brake valve, brake chambers and other components for air leaks (Full air brake type only).
4. Check the brake lines and hoses for any interference with or rubbing by the front wheels, in accordance with the procedures set forth below.
   i) Turn off the engine with the vehicle parked on a safe and level place.
   ii) Fully turn the steering wheel of your vehicle to your right and to your left.
   iii) Check the front wheels for any interference or rubbing of the brake lines or hoses with the front wheels.
5. If any abnormalities are noticed during checking, contact your Hino dealer to have the brake lines and hoses inspected or repaired.

**—Clutch fluid (manual transmission only)**

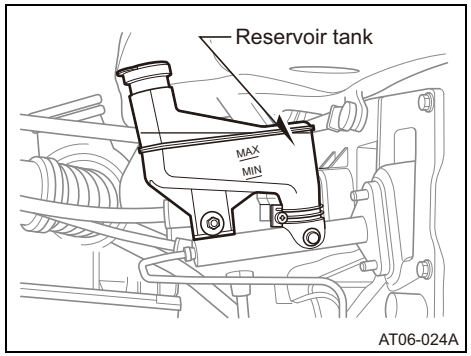


**Clutch fluid reservoir tank**

The clutch fluid reservoir tank is installed in the engine compartment.

**Check the clutch fluid**

**⚠ CAUTION**

- **Frequent drops of the fluid level within a short time after replenishing indicate possible leakage of the fluid. Visually check the reservoir for any leakage and if you cannot find a leak, contact your Hino dealer for inspection.**
- **Be sure to use the proper clutch fluid (see "Table 7: Recommended lubrication" on page 6-105.)**

1. Check to determine if the clutch fluid level is between the "**MAX.**" and "**MIN.**" marks.
2. If the clutch fluid is on or near the "**MIN.**" mark, remove the filler cap and add the fluid up to the "**MAX.**" mark and install the filler cap securely.

**—Brake fluid (Hydraulic brake type)**

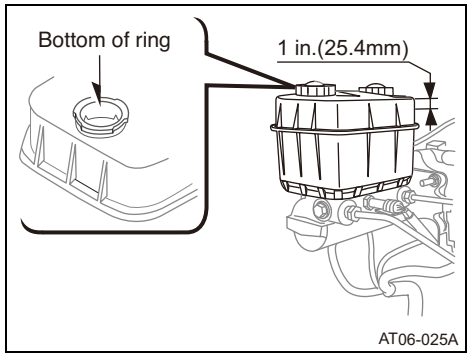


**Brake fluid reservoir tank**

The brake fluid reservoir is installed on the left (driver) side in the engine compartment.

**⚠ WARNING**

**To maintain proper performance of the service brakes, use the originally designated brake fluid. Using other brake fluid may adversely affect the performance of the service brake, resulting in death or serious injury in an accident. If you do not know the originally designated brake fluid, contact your Hino dealer.**

**⚠ CAUTION**

**When refilling brake fluid, be careful not to spill the brake fluid onto the coated or painted area surrounding the reservoir If you spill brake fluid, wipe off immediately with a clean cloth.**

**Check the brake fluid**

**⚠ WARNING**

**Never expose the fuel filter to brake fluid and organic solvents (such as parts cleaner and paint thinner) to prevent the filter cover from cracking resulting in a fire.**

Visually check if the brake fluid level to make certain it is not lower than the bottom of the ring (measuring 1 in. (25.4 mm)), as shown in the illustration above. If the brake fluid level is below the bottom of the ring, remove the filler cap, refill the brake fluid up to the bottom of the ring, and install the filler cap securely.

**⚠ WARNING**

- **If the vehicle is experiencing engine trouble, never allow it to be driven. Otherwise, the service brake, which is power assisted when the engine is running, may not function properly. You may lose control of your vehicle, resulting in death or serous injury in an accident.**
- **If the electrical backup pump of the brake system does not work properly, never allow the vehicle to driven. Otherwise, the service brake will not function properly, resulting in death or serous injury in an accident.**

**—Checking the back up pump of the brake pedal (Hydraulic brake type only)**

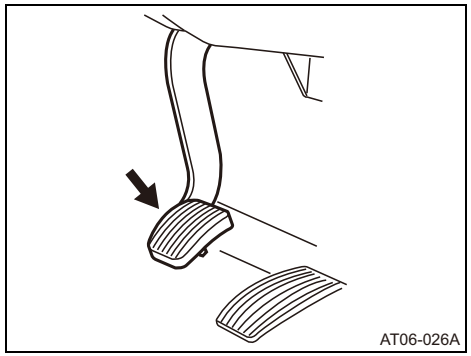


1. Confirm that the vehicle is parked in a safe location and on level ground and that the parking brake is applied firmly with the key in “**LOCK**” position.
2. Apply the service brake and check to determine whether or not you hear the motor sound of the backup pump of the brake pedal. If you do not hear the motor sound, contact your Hino dealer to have it inspected.

### —Parking brake (Full air brake type)

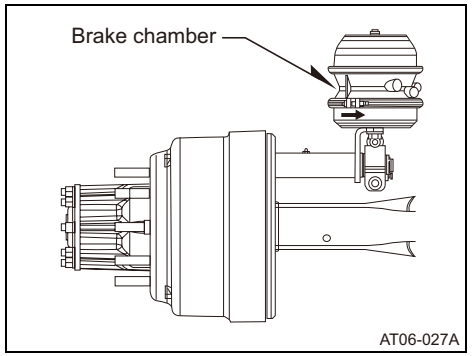


**Check the parking brake (Full air brake type only)**

1. Visually check the parking brake chambers for any damage.
2. Visually check the parking brake air lines for any damage.
3. Visually check to determine if the mounting bolts for the brake chambers are loose.
4. If damage is seen, or the mounting bolts are loose, have the parking brake inspected or repaired by your Hino dealer.

### —Windshield washer

The windshield washer tank is located on the passenger side door. Perform the following procedures to determine the level of the windshield washer solution.

**Check the windshield washer solution level.**

| ⚠ CAUTION |
| --- |
| **Be careful not to damage the washer tank by contacting it when entering and exiting the cab.** |

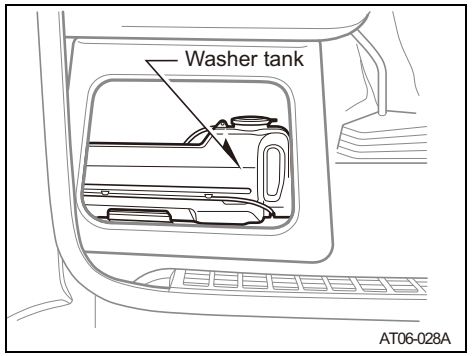


1. Open the passenger side door of the vehicle.
2. Check the fluid level of the windshield washer and if the level is low, add washer fluid.

***NOTICE:***

*The windshield spray nozzles are attached to the ends of the wiper arms.*

**Mixing the washer fluid.**

**⚠ WARNING**

**Keep the washer fluid away from open flames. The washer fluid contains a flammable solvent.**

**⚠ CAUTION**

**Use the designated washer fluid only for the prevention of the freezing of the washer fluid.**

**Never use antifreeze which may damage the painted surfaces of the vehicle.**

The solution's ratio of washer fluid to water should vary depending on the outside temperature to prevent freezing of the washer fluid. Mix the undiluted solution with water in accordance with the following table:

| Season | Mixture ratio | | Freezing Temperature |
|---|---|---|---|
| | Undiluted solution | Water | |
| Normal | 1 | 2 | Approx. 14°F (-10°C) |
| Winter | 1 | 1 | Approx. -4°F (-20°C) |
| Severe cold | Undiluted solution only | | Approx. -58°F (-50°C) |

### —Seat

**Ensuring a correct driving posture.**

Adjust the driver's seat to maintain your correct driving posture. See page 2-26.

**⚠ CAUTION**

**When adjusting the driver's seat, be sure to check that your driving position meets the following requirements.**

- **You can fully depress the pedals.**
- **You can turn and operate the steering wheel easily.**
- **Your shoulders rest against the seat back.**
- **You can wear your seat belt correctly.**
- **Your head rests against the headrest.**

**If the driver's seat is not adjusted correctly for you, you can lose control of the vehicle resulting in an accident which can cause death or serious injury.**

### —Steering wheel

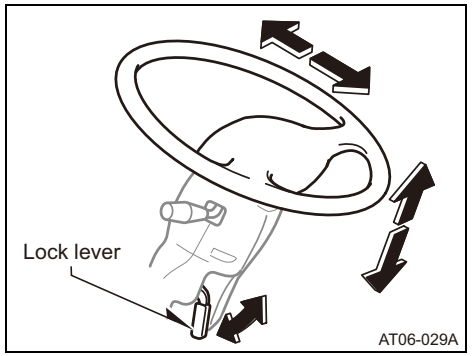


**Adjust the steering wheel to the desired position. See page 2-49.**

### —Mirrors

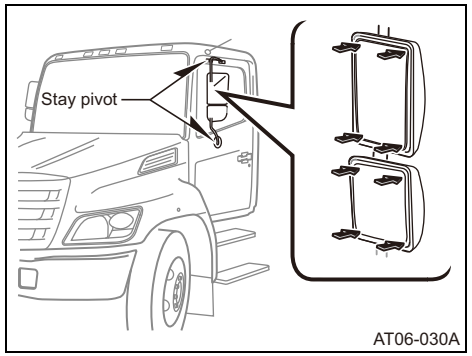


**Adjust the outside mirrors. See page 2-51.**

## Starting the engine

**⚠ WARNING**

- **Exhaust gases and fumes from the engine contain carbon monoxide, a colorless, odorless gas which is very harmful.**
- **Inhaling the exhaust gases or fumes may cause unconsciousness resulting in death.**
- **Improper maintenance of the exhaust system, as well as a damaged or corroded exhaust system can allow carbon monoxide to enter the cab.**
- **Never idle the engine in a closed area without sufficient ventilation.**
- **If you believe there is a malfunction in your exhaust system, immediately open all windows and rear ventilators and contact your Hino dealer for the inspection.**

1. Make certain that the parking brake is applied firmly.
2. Place the gearshift lever in neutral position (for manual transmission) or place the selector lever in "**P**" position (automatic transmission with "**P**" position) or "**N**" position (automatic transmission without "**P**" position), so that the vehicle does not move.
3. Turn the key to the "**ON**" position and follow the procedures set forth below.

**⚠ WARNING**

**Before starting the engine, always apply the parking brake firmly and place the gearshift lever in neutral position (for manual transmission) or place the selector lever in "P" position (automatic transmission with "P" position) or "N" position (automatic transmission without "P" position) so that the vehicle does not move.**

### After starting the engine—

### —Check warning lights, indicator light and gauges

Check warning lights, indicator light and gauges in accordance with the procedures set forth below. If any abnormalities are noticed, immediately contact your Hino dealer to have the vehicle inspected or repaired.

**⚠ WARNING**

**Warning lights indicate that certain vehicle malfunctions have been detected. (See page 2-66.) If the warning lights will not go off after starting the engine, never try to drive the vehicle. Immediately contact your Hino dealer to have the vehicle inspected.**

**⚠ CAUTION**

- **If the ABS light comes on while driving, there could be a problem with the vehicle's anti-lock braking system. Have your vehicle inspected and serviced immediately at your Hino dealer.**
- **For vehicles with an Allison transmission, if the ABS has problem, the Allison transmission will not allow torque convertor lockup. If this condition is ignored, the transmission fluid may overheat, causing fluid to be pumped out of the transmission breather and or dipstick tube, which can result in premature wear of or damage to the transmission.**
- **Before driving the vehicle, confirm by looking at the fuel gauge that the vehicle has sufficient fuel and that any emergency equipment is in place.**

**SVS light** (SVS)
—Make certain that the SVS light turns on and then turn the key to "**START**" position and make certain that the warning light then goes off. (See page 2-73). If the SVS light does not turn on, or does not go off properly, contact your Hino dealer for inspection of the vehicle. This warning light shows whether or not the operating condition of the electronically controlled engine system is normal. If the warning light does not light up, it may be due to the burning out of the bulb or to an abnormality of the electronically controlled engine system. If this warning light illuminate after starting the engine, or while driving the vehicle, it is a sign that something abnormal has occurred.

**Brake pressure warning light**(BRAKE or )
—Make certain that the brake pressure warning light turns on. Turn the key to the "**START**" position and make certain that the warning light then goes off. If the warning light does not go off, a malfunction of the brake system is detected.

**Air pressure warning light (Ⓘ) (Full air brake type)**
—Make certain that the air pressure warning light turns on. Turn the key to "**START**" position and make certain that the warning light then goes off.

**Battery charge warning light (🔋)**
—Make certain that the battery charge warning light pressure turns on. Turn the key to "**START**" position and make certain that the battery charge warning light then goes off.

**ABS warning light (ABS or Ⓐ)**
—Make certain that the ABS warning light (ABS or Ⓐ) briefly comes on and then goes off after a few seconds.

**Parking brake warning light(Ⓟ PARK or Ⓟ)**
—Apply the parking brake and make certain that the warning light turns on. Then release the parking brake and make certain that the parking brake warning light is off and apply the parking brake again.

**Air pressure warning light (Ⓘ) (Full air brake type)**
—The air pressure warning light does not turn on if the air pressure is at the proper level.

**Turn signal and hazard indicator lights (⬅➡)**
—Make certain that the turn signal and hazard indicator lights operate.

## —Turn signal lights

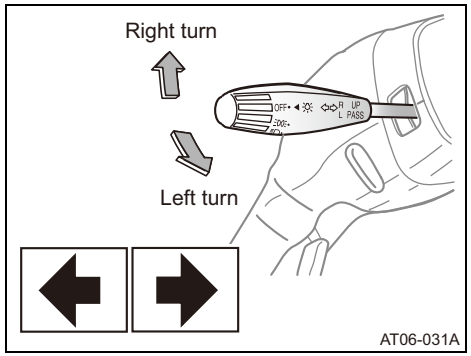


1. Move the turn signal switch lever toward you and then push frontward and determine if the turn signal indicator lights on the instrument cluster blink.

   **Blink rate: 75—95 blinks/minute**

2. Keep the turn signal indicator lights on and visually determine that both of the turn signal lights outside of the cab blink. Replace the bulb of the turn signal lights if they do not blink.

### —Hazard lights

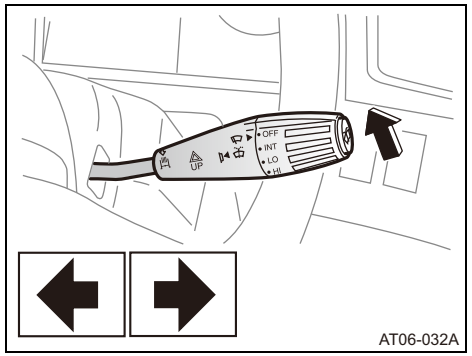


Pull up the hazard light lever and check that the hazard lights outside of the vehicle and the indicator lights on the instrument cluster blink. When the lever is pulled up again, the lights will go off.

### —Seat belts

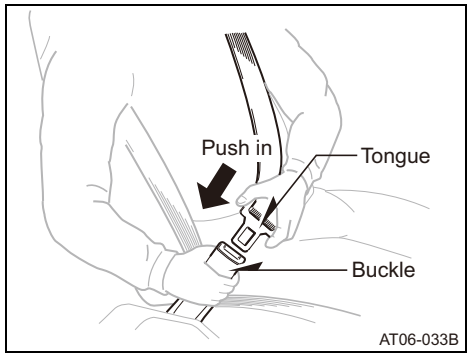


**⚠ WARNING**

**Be sure to check the seat belts before driving the vehicle since malfunction of the seat belts may result in death or serious injury in an accident.**

Visually check the seat belts and buckles for any damage. Make certain that the seat belts are fastened and can be adjusted properly before driving (see pages 2-29 through 2-49).

### —Check the horn function

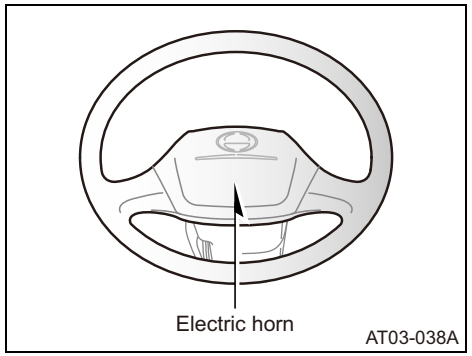


**Electric horn**

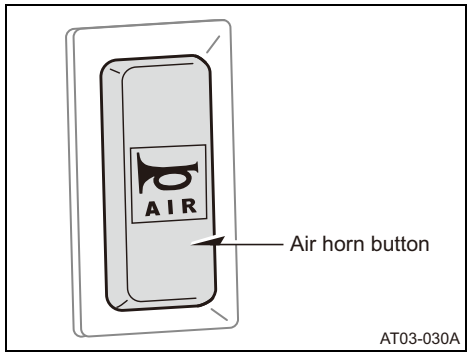


**Air horn**

**Check the horn button**

1. Turn the key to the "**ON**" position with the vehicle parked on a level and safe place.
2. Push the electric horn button or air horn button and confirm that the horn buttons work properly.

**—Windshield wiper and washer switch**

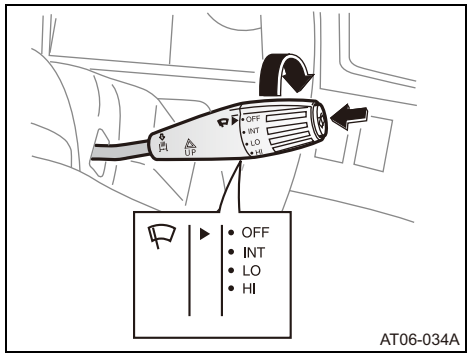


**Check the windshield wiper and washer switch**

Check that the windshield wiper and washer switch operates correctly at each operational position (see page 2-59).

**—Door lock**

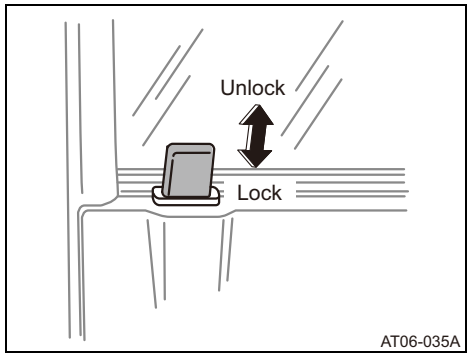


**Check door locks function**

Check that the door lock functions properly and operates the door lock correctly at each operational position (see page 2-11).

**After starting the engine, but before starting to drive;**

1. Make certain that the gearshift lever is in neutral position (for manual transmission) or the selector lever in the "**P**" position (automatic transmission with "**P**" position) or "**N**" position (automatic transmission without "**P**" position), so that the vehicle does not move.
2. Turn the key to the "**START**" position and perform the checks set forth below in accordance with the following procedures;

### —Check the air pressure gauge (Full air brake type)

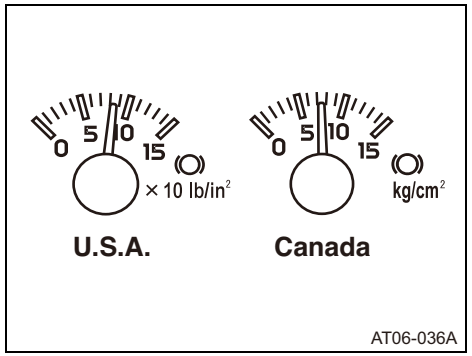


1. Wait until the pointer reading on the air pressure gauge exceeds **79 lb/in$^2$ (5.5 kg/cm$^2$)**.
2. Then turn off the engine and wait one minute to see if the pointer reading of the air pressure gauge drops. A drop of the pointer reading indicates possible leakage in the brake air system. In such a situation, immediately contact your Hino dealer to have the vehicle inspected.

### —Steering wheel

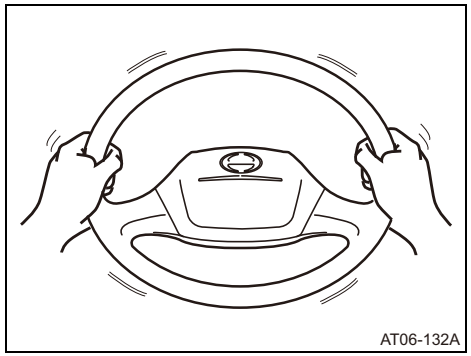


**Check the steering wheel play**

With the front wheels pointed straight ahead, check that the steering wheel play is within the limits set forth in the chart below.

| | |
|---|---|
| Standard | 0—1.37 in (0—35 mm) |
| Limit | 1.97 in (50 mm) |

## —Parking brake

**⚠ WARNING**

- **Avoid applying the parking brake while driving. Use of the parking brake while driving can make the rear wheel lock up and the vehicle can be unstable. Doing so can result in death or serous injury in an accident.**
- **Make sure that there is no one in front of, behind and around your vehicle before and while checking the parking brake holding ability. Otherwise, the vehicle may start to move, resulting in a serious accident. Apply the service brake immediately, if the parking brake does not hold the vehicle while you check the parking brake holding ability.**

### PARKING BRAKE FUNCTION

Check the parking brake holding ability on a 20 percent grade. Be sure to check the parking brake holding ability in both conditions that your vehicle is facing uphill and your vehicle is facing downhill in accordance with the following procedures.

1. Stop your vehicle on a 20 percent grade.
2. Keep your foot on the service brake.
3. Pull the parking brake control knob or pull the parking brake lever.
4. With the engine running and transmission in “**N**” (Neutral) position, slowly remove your foot from the service brake and check if the vehicle is held by the parking brake only.
5. If the parking brake does not hold the vehicle, contact your Hino dealer to repair the parking brake.

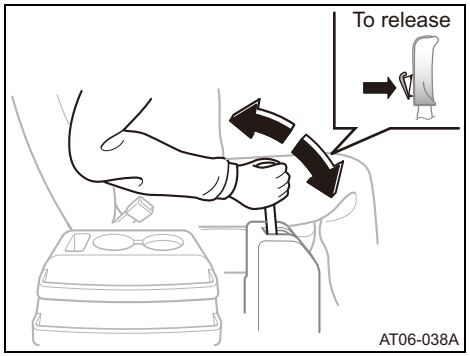


**Hydraulic brake type**

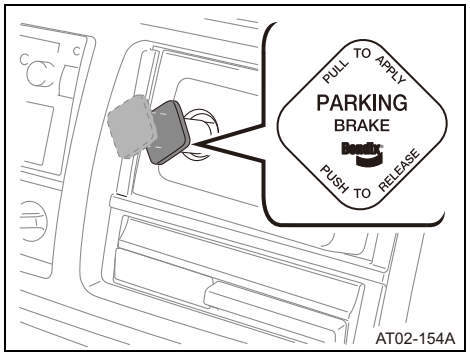


**Full air brake type**

Check the parking brake function on 20 percent grade.

With the vehicle on the 20 percent grade, pull the parking brake control knob (full air brake type) or pull up the parking brake lever (hydraulic brake type) to apply the parking brake.

If the parking brake does not hold the vehicle, contact your Hino dealer for check and adjust the parking brake.

## —Pedals

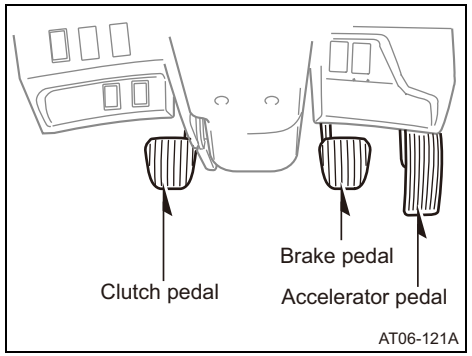


### CHECK THE ACCELERATOR PEDAL

**⚠ WARNING**

- **If any abnormality is noticed when the accelerator is checker, to avoid death or serious injury in an accident, immediately contact your Hino dealer so that a proper adjustment to the accelerator pedal may be made.**
- **Never start to drive the vehicle if the engine idle speed is higher than standard (750 rpm (r/min)). Starting in such a situation may cause sudden acceleration of the vehicle, resulting in death or serious injury in an accident. In addition, doing so may cause premature wear of the clutch and increase fuel consumption.**

Depress the accelerator pedal and check that the pedal moves smoothly.

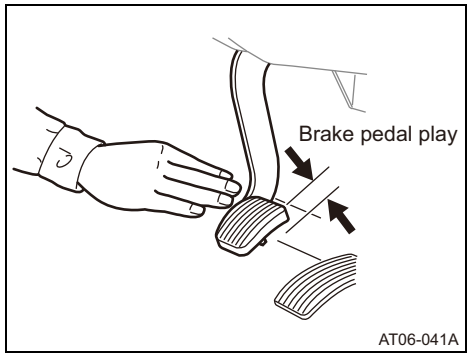


## CHECK THE SERVICE BRAKE PEDAL

**⚠ WARNING**

- **To maintain proper performance of the service brake, be sure to have the wheel brake lining inspected by your Hino dealer for any wear at the intervals set forth in the chart at page 6-43.**
- **Be sure to have the service brake adjusted by your Hino dealer only. Failure to perform a brake adjustment properly can result in death or serious injury in an accident.**
- **Be sure to park the vehicle in a safe place on level ground before conducting the check so that the vehicle does not move.**
- **To avoid death or serious injury in an accident, immediately contact your Hino dealer for the proper adjustment of the brake pedal if the brake pedal play is out of the range of standard brake pedal play.**

**Check the service brake pedal for play**

1. Depress the brake pedal by hand and measure the brake pedal play between the original position of the brake pedal and the position where the brake pedal is fully depressed. Then confirm that the brake pedal play measured is within the range specified below.

**Standard play:** in. (mm)

0.078—0.196 (2—5)

2. Check that there is a clearance between the brake pedal and the toe board when the brake pedal is fully depressed.
3. If your service brake is the full air brake type, make sure that the sound of exhaust can be heard from the brake valve mounted underneath the cab floor, when the depressed brake pedal is released.

## CHECK THE CLUTCH PEDAL (MANUAL TRANSMISSION ONLY)

**⚠ WARNING**

**To avoid death or serious injury in an accident, immediately contact your Hino dealer for the proper adjustment of the clutch pedal if clutch pedal play is below the limit 1.4 in. (35 mm).**

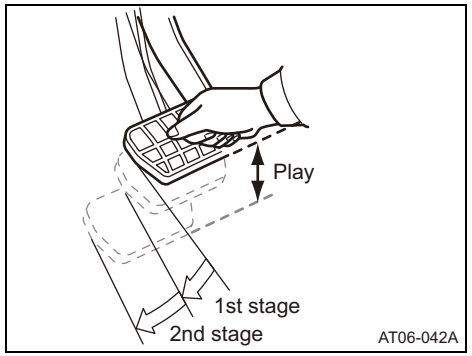


### Check the clutch pedal play

1. Turn off the engine with the vehicle parked on a safe and level and apply the parking brake firmly.
2. While depressing the clutch pedal by hand, you will feel resistance at two separate stages, as depicted on the illustration above.
3. Measure the clutch pedal play between the original position of the clutch pedal and the position where the clutch pedal is fully depressed after the second stage of resistance.
4. Check whether or not the measurement of clutch pedal play is below the limit 1.4 in. (35 mm).
5. If clutch pedal play is below the limit, contact your Hino dealer for proper adjustment.

| **Standard play and limit:** | in. (mm) |
|---|---|
| Standard | 1.7—2.3 (44—59) |
| Limit | 1.4 (35) |

**Check the operation of the clutch pedal**

1. Turn on the engine and keep the engine at idle with the vehicle parked in a safe and level place.
2. Determine that it is not abnormally hard to depress the clutch pedal and that there are no unusual noises when depressing the clutch pedal.
3. Check that the gears can be shifted smoothly.
4. Release the clutch pedal slowly and gradually, and check that the clutch pedal is engaged smoothly with no slippage or jolting.

## —Check outside the cab

Visually check the following from the outside of the cab with the engine at idle.

- Any leakage of fuel, lubricants, fluids, exhaust fumes or other substances.
- Function of all lights.
- Unusual noise or smoke from the engine.

**Check immediately after driving the vehicle;**

While driving the vehicle at a speed of 3 mph (5 km/h) to 6 mph (10 km/h) on level ground in a safe and spacious area, free of passengers, other people and other vehicles, check the following:

**Service brake—**Make sure that the brakes are effective and that the vehicle does not pull to one side when braking.

**Steering wheel—**Make sure that the steering wheel is stable when you drive straight and does not pull to one side.

H1-A038E01.book 36 ページ ２０１６年１０月１９日 水曜日 午後５時２６分

H1-A038E01.book 37 ページ ２０１６年１０月１９日 水曜日 午後５時２６分

# SECTION 6 – 2

## MAINTENANCE

### Periodic maintenance

Clean air act ..... 6-39
General precautions ..... 6-41
Periodic maintenance ..... 6-41
**Table 1**: Recommended maintenance service ..... 6-43
Noise emission control ..... 6-56
Cooling system ..... 6-58
Fuel system ..... 6-60
Lubrication ..... 6-63
Air intake system ..... 6-77
Electric system ..... 6-78
Fuses ..... 6-79
Fusible links ..... 6-83
Service brake system ..... 6-85

Read entire manual before using vehicle. Failure to follow instructions and safety precautions could result in death, serious injury and/or damage.

H1-A038E01.book 38 ページ ２０１６年１０月１９日 水曜日 午後５時２６分

Wheel nuts and bolts .....6-86
Tire .....6-88
Power steering system .....6-90
**Table 2**: Standard adjustment dimensions.....6-91
**Table 3**: Tightening torque.....6-94
**Table 4**: Bolt tightening torque chart (for general purpose).....6-100
**Table 5**: Lubricants capacity .....6-102
**Table 6**: Pressure.....6-104
**Table 7**: Recommended lubrication.....6-105
**Table 8**: Requirements of biodiesel fuel usage.....6-109
**Table 9**: Lubrication chart .....6-113
**Table 10**: Light bulb replacement.....6-121

## Clean air act

§ 86.004-40 Heavy-duty engine rebuilding practices.

The provisions of this section are applicable to heavy-duty engines subject to model year 2004 or later standards and are applicable to the process of engine rebuilding (or rebuilding a portion of an engine or engine system). The process of engine rebuilding generally includes disassembly, replacement of multiple parts due to wear, and reassembly, and also may include the removal of the engine from the vehicle and other acts associated with rebuilding an engine. Any deviation from the provisions contained in this section is a prohibited act under section 203 (a)(3) of the Clean Air Act (42 U.S.C. 7522 (a)(3)).

(a) When rebuilding an engine, portions of an engine, or an engine system, there must be a reasonable technical basis for knowing that the resultant engine is equivalent, from an emissions standpoint, to a certified configuration (i.e., tolerances, calibrations, specifications) and the model year(s) of the resulting engine configuration must be identified. A reasonable basis would exist if:(1) Parts installed, whether the parts are new, used, or rebuilt, are such that a person familiar with the design and function of motor vehicle engines would reasonably believe that the parts perform the same function with respect to emissions control as the original parts; and (2)
Any parameter adjustment or design element change is made only:

(i) In accordance with the original engine manufacturer's instructions; or

(ii) Where data or other reasonable technical basis exists that such parameter adjustment or design element change, when performed on the engine or similar engines, is not expected to adversely affect in-use emissions.

(b) When an engine is being rebuilt and remains installed or is reinstalled in the same vehicle, it must be rebuilt to a configuration of the same or later model year as the original engine. When an engine is being replaced, the replacement engine must be an engine of (or rebuilt to) a configuration of the same or later model year as the original engine.

(c) At time of rebuild, emissions-related codes or signals from on-board monitoring systems may not be erased or reset without diagnosing and responding appropriately to the diagnostic codes, regardless of whether the systems are installed to satisfy requirements in § 86.004-25 or for other reasons and regardless of form or interface. Diagnostic systems must be free of all such codes when the rebuilt engine is returned to service. Such signals may not be rendered inoperative during the rebuilding process.

(d) When conducting a rebuild without removing the engine from the vehicle, or during the installation of a rebuilt engine, all critical emissions-related components listed in § 86.004-25(b) not otherwise addressed by paragraphs (a) through (c) of this section must be checked and cleaned, adjusted, repaired, or replaced as necessary, following manufacturer recommended practices.

(e) Records shall be kept by parties conducting activities included in paragraphs (a) through (d) of this section. The records shall include at minimum the mileage and/or hours at time of rebuild, a listing of work performed on the engine and emissions-related control components including a listing of parts and components used, engine parameter adjustments, emissions-related codes or signals responded to and reset, and work performed under paragraph (d) of this section.

(1) Parties may keep records in whatever format or system they choose as long as the records are understandable to an EPA enforcement officer or can be otherwise provided to an EPA enforcement officer in an understandable format when requested.

(2) Parties are not required to keep records of information that is not reasonably available through normal business practices including information on activities not conducted by themselves or information that they cannot reasonably access.

(3) Parties may keep records of their rebuilding practices for an engine family rather than on each individual engine rebuilt in cases where those rebuild practices are followed routinely.

(4) Records must be kept for a minimum of two years after the engine is rebuilt.

**Maintenance instructions**
**§ 86.010-38**

(i) For each new diesel-fuelled engine subject to the standards prescribed in § 86.007-11, as applicable, the manufacturer shall furnish or cause to be furnished to the ultimate purchaser a statement that **“This engine must be operated only with ultra low sulfur diesel fuel (meeting EPA specifications for highway diesel fuel, including a 15 ppm sulfur cap)”.**

H1-A038E01.book 41 ページ ２０１６年１０月１９日 水曜日 午後５時２６分

## General precautions

For your safety and the proper operation of the vehicle, perform the periodic maintenance described in this section. When performing maintenance on your vehicle, be sure to read and observe all the instructions and cautionary information described in this section to avoid serious injury or death in an accident. If you have any questions about performing maintenance, consult your Hino dealer.

## Periodic maintenance

**⚠ WARNING**

**Maintenance items and intervals set forth in the periodic maintenance is the standard maintenance schedule when the vehicle is driven under normal condition. Normal driving conditions mean that the vehicle carries passengers and cargo within the GVWR and GAWR's specified on the Certification Label, and runs on a paved road within legal speed limits. Depending on your driving conditions, maintenance for other items and more frequent maintenance may be required.**

- **Perform all periodic maintenance at the designated interval.**
- **Be sure to note that there is Periodic maintenance necessary for different systems and components at the FIRST "1,000 miles (1,600 km)", "3,000 miles (5,000 km)", and "5,000 miles (8,000 km)", for both new vehicles and after major overhaul of the vehicle has been performed.**
- **Maintenance should be performed in accordance with the designated intervals of miles or months, whichever comes first.**
- **See "Table 1: Recommended maintenance service" on page 6-43 for maintenance items which require Periodic maintenance.**

H1-A038E01.book 42 ページ ２０１６年１０月１９日 水曜日 午後５時２６分

- **Maintenance items and intervals set forth in the periodic maintenance is the standard maintenance schedule when the vehicle is driven under normal condition. Normal driving conditions mean that the vehicle carries passengers and cargo within the GVWR and GAWR's specified on the Certification Label, and runs on paved roads within legal speed limits. Depending on your driving conditions, maintenance for other items, and more frequent maintenance on scheduled items, may be required.**
- **The maintenance items related to the EXHAUST EMISSION CONTROL SYSTEM are marked with an asterisk (*).**
- **The form of the maintenance record for the NOISE EMISSION CONTROL is attached after page 9-2.**

  **The maintenance record should always be completed whenever maintenance on the NOISE EMISSION CONTROL is performed.**

## Table 1:
## Recommended maintenance service

**Maintenance operations:** **A** = Check and adjust if necessary; **I =** Inspect, clean and correct or replace as necessary; **L** = Lubricate; **R** = Replace or change; **T** = Tighten to specified torque

| **SERVICE INTERVALS:** | Odometer ranging | First | Every | | | | | | | | | | | | Months (every) |
|---|---|---|---|---|---|---|---|---|---|---|---|---|---|---|---|
| (Odometer reading or months, | Miles (x 1,000) | 3 | 6 | 9 | 10 | 12 | 15 | 18 | 20 | 24 | 30 | 36 | 50 | 72 | |
| whichever comes first.) | Kilometers (x 1,000) | 5 | 10 | 15 | 16 | 20 | 25 | 30 | 32 | 40 | 50 | 60 | 80 | 120 | |
| **ENGINE** | | | | | | | | | | | | | | | |
| Valve Clearance | | | | | | | | | | | | | A | | 24 |
| *Engine compression pressure | | | | | | | | | | | | | | A | 36 |
| *Engine mounting | | | | | | | | | | | | | | A | 36 |
| **FUEL SYSTEM**** | | | | | | | | | | | | | | | |
| *Fuel filter (Engine mount) | | R: Every 240,000 miles (400,000 km) | | | | | | | | | | | | | 84 |
| *Fuel filter (Chassis mount) | | | | | | | | | R | | | | | | 6 |
| Fuel hose (Fuel filter (Chassis mount) to supply pump, Fuel tank to fuel filter (Chassis mount), Engine to fuel tank) | | | | | | A | | | | | | | | R | R:36 |
| *Fuel injector of the exhaust system | | | | | | | | | | | | | | | I:12 |
| **LUBRICATING SYSTEM** | | | | | | | | | | | | | | | |
| Engine oil and oil filter | With Hino genuine motor oil | Type of operation details, see page 6-64 | Type 1 | R | | | | R | | | | | | | | 6 |
| | | | Type 2 | R | | | | | | | R | | | | | 6 |
| | With non-genuine motor oil | | Type 1 | R | R | | | | | | | | | | | 2 |
| | | | Type 2 | R | | | R | | | | | | | | | 2 |
| **BREATHER** | | | | | | | | | | | | | | | |
| Breather filter element and an O-ring | | R: Every 60,000 miles (100,000 km) | | | | | | | | | | | | | 12 |

** When using biodiesel fuel, the maintenance interval may be changed.
For detail, see “Table 8: Requirements of biodiesel fuel usage” on page 6-109, and please consult your Hino dealer.

A-06-2.fm 44 ページ ２０１６年１０月２６日 水曜日 午前９時５９分

**Maintenance operations:** **A** = Check and adjust if necessary; **I =** Inspect, clean and correct or replace as necessary; **L** = Lubricate; **R** = Replace or change; **T** = Tighten to specified torque

| **SERVICE INTERVALS:** | Odometer ranging | First | Every | | | | | | | | | | | | Months (every) |
|---|---|---|---|---|---|---|---|---|---|---|---|---|---|---|---|
| (Odometer reading or months, | Miles (x 1,000) | 3 | 6 | 9 | 10 | 12 | 15 | 18 | 20 | 24 | 30 | 36 | 50 | 72 | |
| whichever comes first.) | Kilometers (x 1,000) | 5 | 10 | 15 | 16 | 20 | 25 | 30 | 32 | 40 | 50 | 60 | 80 | 120 | |
| **COOLING SYSTEM** | | | | | | | | | | | | | | | |
| Coolant (Hino genuine Long Life Coolant used) | Pink type | R: Every 360,000 miles (600,000 km) | | | | | | | | | | | | | 36 |
| | Blue type | R: Every 500,000 miles (800,000 km) | | | | | | | | | | | | | 48 |
| *Cooling fan | | | | | | | | | | | | I | | | 12 |
| *Drive belts | | Initial inspection at first 6,000 miles (10,000 km) | | | | | | | | | | R | | | 12 |
| *Radiator and heater hoses and clamps | | | | | | | | | | | | I | | | 12 |
| **AIR INTAKE AND EXHAUST SYSTEM** | | | | | | | | | | | | | | | |
| *Air cleaner element | | | | | | | | | | | | R | | | 12 |
| *Intake air hose and clamps | | | | | | A | | | | | | R | | | 24 |
| *Intercooler body | | | | | I | | | | | | | | | | 6 |
| *Intercooler hoses | | | | | | | | | | | | | | I | 24 |
| Turbo charger rotor operation | | | | | | | | | | | | | | I | 24 |
| *Hose for difference pressure sensor of DPR | | | | | | | | | | | | | | | R:36 |
| **DEF-SCR SYSTEM (EXHAUST GAS AFTER TREATMENT SYSTEM)** | | | | | | | | | | | | | | | |
| PM sensor | | R: Every 150,000 miles (240,000 km) | | | | | | | | | | | | | 60 |
| DEF filter | | R: Every 150,000 miles (240,000 km) | | | | | | | | | | | | | — |
| Exhaust gas leakage from around the sensor | | | | | A | | | | | | | | | | — |

**Maintenance operations:** **A** = Check and adjust if necessary; **I =** Inspect, clean and correct or replace as necessary; **L** = Lubricate; **R** = Replace or change; **T** = Tighten to specified torque

| **SERVICE INTERVALS:** | Odometer ranging | First | Every | | | | | | | | | | | | | Months (every) |
|---|---|---|---|---|---|---|---|---|---|---|---|---|---|---|---|---|
| (Odometer reading or months, | Miles (x 1,000) | 3 | 6 | 9 | 10 | 12 | 15 | 18 | 20 | 24 | 30 | 36 | 50 | 72 | 500 | |
| whichever comes first.) | Kilometers (x 1,000) | 5 | 10 | 15 | 16 | 20 | 25 | 30 | 32 | 40 | 50 | 60 | 80 | 120 | 800 | |
| **CLUTCH FOR MANUAL ADJUST TYPE** | | | | | | | | | | | | | | | | |
| Clutch fluid leakage and damage | | | | | | | | | A | | | | | | | 6 |
| Clutch release sleeve and shaft | | | | L | | | | | | | | | | | | 1 |
| Clutch facing wear | | | | A | | | | | | | | | | | | 2 |
| Clutch housing and flywheel housing bolt | | | | | | | | | | | | T | | | | 12 |
| Clutch hose | | | | | | | | | | | | | R | | | 12 |
| **CLUTCH FOR AUTOMATIC ADJUST TYPE (Solo® Clutch)** | | | | | | | | | | | | | | | | |
| Clutch release sleeve and shaft | | | | L | | | | | | | | | | | | 1 |
| Clutch facing wear (Check the wear indicator) | | | | A | | | | | | | | | | | | 2 |
| Clutch housing and flywheel housing bolt | | | | | | | | | | | | T | | | | 12 |
| Clutch hose | | | | | | | | | | | | R | | | | 12 |
| Clutch fluid | | | | | | | | | | | | R | | | | 12 |
| **MANUAL TRANSMISSION** | | | | | | | | | | | | | | | | |
| Transmission gear oil (Mineral oils) | | R: First replace at 3,000 – 5,000 miles (5,000 – 8,000 km) | | | | | | | | | | | | | | — |
| (Eaton® FS-5406A and FS-6406A) | | | | | I | | | | | | | | R | | | R:12 |
| Transmission gear oil (Synthetic oils) (Eaton® FS-5406A and FS-6406A) | | | | | I | | | | | | | | | | R | R:60 |

**Maintenance operations:** **A** = Check and adjust if necessary; **I =** Inspect, clean and correct or replace as necessary; **L** = Lubricate; **R** = Replace or change; **T** = Tighten to specified torque

| **SERVICE INTERVALS:** (Odometer reading or months, whichever comes first.) | Odometer ranging | First | Every | | | | | | | | | | | | | Months (every) |
|---|---|---|---|---|---|---|---|---|---|---|---|---|---|---|---|---|
| | Miles (x 1,000) | 3 | 6 | 9 | 10 | 12 | 15 | 18 | 20 | 24 | 30 | 36 | 50 | 72 | 500 | |
| | Kilometers (x 1,000) | 5 | 10 | 15 | 16 | 20 | 25 | 30 | 32 | 40 | 50 | 60 | 80 | 120 | 800 | |
| **AUTOMATIC TRANSMISSION, TES389**- approved fluid** | | | | | | | | | | | | | | | | |
| Automatic transmission fluid | Allison® 3000RDS and 3500RDS | | | | I | | R: Every 25,000 miles (40,000 km) | | | | | | | | | R:12 |
| | Allison® 2200HS,2200RDS, 2500HS and 2500RDS | | | | I | | | | | | | | R | | | R:24 |
| Main filter and lube filter | Allison® 3000RDS and 3500RDS | R: Every 25,000 miles (40,000 km) | | | | | | | | | | | | | | 12 |
| Spin-on filter | Allison® 2200HS,2200RDS, 2500HS and 2500RDS | | | | | | | | | | | | R | | | 24 |
| Fluid level, fluid leak and case damage | | | A | | | | | | | | | | | | | 1 |
| Transmission and mounting bolts | | | | | | | | | | | | T | | | | 12 |
| Shift linkage freely positioned by transmission detent | | | | | | | | | | | | A | | | | 12 |
| **AUTOMATIC TRANSMISSION, TES 295**- approved fluid** | | | | | | | | | | | | | | | | |
| Automatic transmission fluid | Allison® 3000RDS and 3500RDS | | | | I | | R: Every 300,000 miles (480,000 km) | | | | | | | | | R:48 |
| | Allison® 2200HS,2200RDS, 2500HS and 2500RDS | | | | I | | R: Every 150,000 miles (240,000 km) | | | | | | | | | R:48 |
| Main filter and lube filter | Allison® 3000RDS and 3500RDS | R: Every 75,000 miles (120,000 km) | | | | | | | | | | | | | | 36 |
| Spin-on filter | Allison® 2200HS,2200RDS, 2500HS and 2500RDS | | | | | | | | | | | | R | | | 24 |
| Fluid level, fluid leak and case damage | | | A | | | | | | | | | | | | | 1 |
| Transmission and mounting bolts | | | | | | | | | | | | T | | | | 12 |
| Shift linkage freely positioned by transmission detent | | | | | | | | | | | | A | | | | 12 |

** About brands, contact your Hino dealer.

H1-A038E01.book 47 ページ ２０１６年１０月１９日 水曜日 午後５時２６分

**Maintenance operations:** **A** = Check and adjust if necessary; **I =** Inspect, clean and correct or replace as necessary; **L** = Lubricate; **R** = Replace or change; **T** = Tighten to specified torque

| **SERVICE INTERVALS:** | Odometer ranging | First | Every | | | | | | | | | | | | Months (every) |
|---|---|---|---|---|---|---|---|---|---|---|---|---|---|---|---|
| (Odometer reading or months, | Miles (x 1,000) | 3 | 6 | 9 | 10 | 12 | 15 | 18 | 20 | 24 | 30 | 36 | 50 | 72 | |
| whichever comes first.) | Kilometers (x 1,000) | 5 | 10 | 15 | 16 | 20 | 25 | 30 | 32 | 40 | 50 | 60 | 80 | 120 | |
| **PROPELLER SHAFT** | | | | | | | | | | | | | | | |
| Propeller shaft deflection | | | | | | | | | | | | A | | | 12 |
| Propeller shaft spline play | | | | | | | | | | | | A | | | 12 |
| Propeller shaft universal joint play | | | | | | | | | | | | A | | | 12 |
| Propeller shaft center bearing support | | | | | | | | | | | | A | | | 12 |
| Propeller shaft mounting bolts | | | | | | | | T | | | | | | | 12 |
| Sliding spline and center bearing seal damage | | | | | | | | | | | | A | | | 12 |
| Propeller shaft spline play | | | L | | | | | | | | | | | | 1 |
| Propeller shaft universal joints | | | L | | | | | | | | | | | | 1 |
| **REAR AXLE** | | | | | | | | | | | | | | | |
| Differential gear oil | | R: See page 6-75 | | | | | | | | | | | | | 12 |
| Axle housing breather | | | | | | | | I | | | | | | | 6 |
| Axle housing cracks, deformation and damage | | | | | | | | | | | | I | | | 12 |
| Axle shaft and mounting bolts | | | | | | | | A | | | | | | | 12 |

H1-A038E01.book 48 ページ ２０１６年１０月１９日 水曜日 午後５時２６分

**Maintenance operations:** **A** = Check and adjust if necessary; **I =** Inspect, clean and correct or replace as necessary; **L** = Lubricate; **R** = Replace or change; **T** = Tighten to specified torque

| **SERVICE INTERVALS:** | Odometer ranging | First | Every | | | | | | | | | | | | Months (every) |
|---|---|---|---|---|---|---|---|---|---|---|---|---|---|---|---|
| (Odometer reading or months, | Miles (x 1,000) | 3 | 6 | 9 | 10 | 12 | 15 | 18 | 20 | 24 | 30 | 36 | 50 | 72 | |
| whichever comes first.) | Kilometers (x 1,000) | 5 | 10 | 15 | 16 | 20 | 25 | 30 | 32 | 40 | 50 | 60 | 80 | 120 | |
| **FRONT AXLE** | | | | | | | | | | | | | | | |
| Front axle lubricated (Oil) | | R: See page 6-74 | | | | | | | | | | | | | 12 |
| Axle parts deformation, cracking, wear and tightness (Except for tie rod ball joint) | | | | | | | | | | | | I | | | 12 |
| Wheel bearing end play | | | | | | | | | | | I | | | | 12 |
| Wheel alignment and Turning angle | | | | | | | | | | | I | | | | 12 |
| Wheel bearing | | | | | | | | | | | I | | | | 12 |
| **STEERING** | | | | | | | | | | | | | | | |
| Steering gear case mounting bolts | | | | | | | | | | | T | | | | 12 |
| Steering parts (steering gear, pitman arm, drag link and steering shaft) | | | | | | | | | | | I | | | | 12 |
| Tie rod and drag link ball joint | | | L | | | | | | | | I | | | | I:12 |
| Steering shaft spline and dust boot | | | | | | L | | | | | I | | | | I:12 |
| King pin, bush and thrust bearing | | | | | | | | L | | | I | | | | I:12 |
| Power steering function | | | | | | | | | | | A | | | | 12 |
| Power steering reservoir tank strainer | | I | | | | | | | | | R | | | | 12 |
| Power steering reservoir tank filter and fluid | | R | | | | | | | | | | R | | | 12 |
| Power steering rubber parts and hoses | | | | | | | | | | | | | | R | 12 |

**Maintenance operations:** **A** = Check and adjust if necessary; **I =** Inspect, clean and correct or replace as necessary; **L** = Lubricate; **R** = Replace or change; **T** = Tighten to specified torque

| **SERVICE INTERVALS:** | Odometer ranging | First | Every | | | | | | | | | | | | Months (every) |
|---|---|---|---|---|---|---|---|---|---|---|---|---|---|---|---|
| (Odometer reading or months, | Miles (x 1,000) | 3 | 6 | 9 | 10 | 12 | 15 | 18 | 20 | 24 | 30 | 36 | 50 | 72 | |
| whichever comes first.) | Kilometers (x 1,000) | 5 | 10 | 15 | 16 | 20 | 25 | 30 | 32 | 40 | 50 | 60 | 80 | 120 | |
| **SERVICE BRAKE FOR HYDRAULIC TYPE** | | | | | | | | | | | | | | | |
| Leakage, damage and tightness | | | A | | | | | | | | | | | | 2 |
| Brake pads and rotor wear and damage | | | | | | | | | | | | I | | | 4 |
| Wheel brake internal parts | | | | | | | | | | | | I | | | 12 |
| Deformation of back plate | | | | | | | | | | | | A | | | 12 |
| Brake pipe and hose damage | | | A | | | | | | | | | | | | 2 |
| Brake hose | | | | | | | | | | | | R | | | 12 |
| Hydraulic booster function | | | | | | | | | | | | A | | | 12 |
| Caliper piston seal and boot | | | | | | | | | | | | R | | | 12 |
| ABS system function | | | | | | | | | | | | A | | | 12 |
| Brake fluid | | | | | | | | | | | | R | | | 12 |
| **SERVICE BRAKE FOR FULL AIR TYPE** | | | | | | | | | | | | | | | |
| Air leakage, damage and tightness | | | A | | | | | | | | | | | | 2 |
| Drum wear and damage | | | | | | | | | | | | I | | | 12 |
| Wheel brake internal parts | | | | | | | | | | | | I | | | 12 |
| Brake chamber rod stroke | | | | | | | | | | A | | | | | 3 |
| Automatic slack adjuster (Front and rear) | | | L | | | | | | | A | | | I | | L:2 A:3 I:6 |
| | | | I: At each reline period, if greater than 100,000 miles (160,000 km) | | | | | | | | | | | | |

**Maintenance operations:** **A** = Check and adjust if necessary; **I =** Inspect, clean and correct or replace as necessary; **L** = Lubricate; **R** = Replace or change; **T** = Tighten to specified torque

| **SERVICE INTERVALS:** | Odometer ranging | First | Every | | | | | | | | | | | | Months (every) |
|---|---|---|---|---|---|---|---|---|---|---|---|---|---|---|---|
| (Odometer reading or months, | Miles (x 1,000) | 3 | 6 | 9 | 10 | 12 | 15 | 18 | 20 | 24 | 30 | 36 | 50 | 72 | |
| whichever comes first.) | Kilometers (x 1,000) | 5 | 10 | 15 | 16 | 20 | 25 | 30 | 32 | 40 | 50 | 60 | 80 | 120 | |
| Brake spider damage and deformation | | | L | | | | | | | | | | | | I:12 |
| Brake spider bushing (front and rear) and brake camshaft bracket bushing (rear) | | | L | | | | | | | | | | | | 2 |
| Return spring | | R: Every 100,000 miles (160,000 km) | | | | | | | | | | | | | 6 |
| S-camshaft rollers and anchor pins | | L: Every 100,000 miles (160,000 km) | | | | | | | | | | | | | 6 |
| Brake pipe and hose damage | | | A | | | | | | | | | | | | 2 |
| Brake hose | | | | | | | | | | | | R | | | 12 |
| Brake chamber diaphragm | | | | | | | | | | | | R | | | 12 |
| ABS system function | | | | | | | | | | | | A | | | 12 |
| ABS control valve | | | | | | | | | | | | | | R | 24 |
| Spring brake rubber parts | | | | | | | | | | | R | | | | 12 |
| Lining wear (Thickness) | | | | | | A | | | | | | | | | 4 |
| Check valve, spring brake modulating valve, brake chamber function | | | | | | | | | | | | | I | | 6 |
| Brake valve, relay valve, spring brake control valve, protection valve function | | | | | | | | | | I | | | | | 3 |
| Brake valve, relay valve, spring brake control valve rubber parts | | R: Every 100,000 miles (160,000 km) | | | | | | | | | | | | | 12 |
| Air dryer (Reservoir drain)** | | A: Every 900 hours or 25,000 miles (40,000 km) | | | | | | | | | | | | | 3 |
| Air dryer (Desiccant cartridge)** | | | | | | | | | | | | | | | R:36 |

** When draining air tanks, if excessive moisture is present replace desiccant cartridge.

A-06-2.fm 51 ページ ２０１６年１０月２６日 水曜日 午前９時５７分

**Maintenance operations:** **A** = Check and adjust if necessary; **I =** Inspect, clean and correct or replace as necessary; **L** = Lubricate; **R** = Replace or change; **T** = Tighten to specified torque

| **SERVICE INTERVALS:** | Odometer ranging | First | Every | | | | | | | | | | | | Months (every) |
|---|---|---|---|---|---|---|---|---|---|---|---|---|---|---|---|
| (Odometer reading or months, | Miles (x 1,000) | 3 | 6 | 9 | 10 | 12 | 15 | 18 | 20 | 24 | 30 | 36 | 50 | 72 | |
| whichever comes first.) | Kilometers (x 1,000) | 5 | 10 | 15 | 16 | 20 | 25 | 30 | 32 | 40 | 50 | 60 | 80 | 120 | |
| **PARKING BRAKE FOR CENTER PARKING TYPE** | | | | | | | | | | | | | | | |
| Lining wear and clearance between drum and lining | | | | | | | | | | | | I | | | 12 |
| Drum wear and damage | | | | | | | | | | | | I | | | 12 |
| Control lever wear and damage | | | | | | | | | | | | I, L | | | I,L:12 |
| Control cable slack and damage | | | | | | A | | | | | | | | | 4 |
| Drum mounting bolts | | | | | | T | | | | | | | | | 4 |
| **PARKING BRAKE FOR WHEEL PARKING TYPE** | | | | | | | | | | | | | | | |
| Leakage, damage and tightness | | | A | | | | | | | | | | | | 2 |
| Control valve and relay valve function | | | | | | | | | | | | I | | | 12 |
| Control valve and relay valve rubber parts | | | | | | | | | | | | R | | | 12 |
| Spring brake chamber rubber parts | | | | | | | | | | | | R | | | 12 |
| **WHEEL AND TIRE** | | | | | | | | | | | | | | | |
| Wheel bearing turning torque | | | | | | | | | | | | A | | | 12 |
| Wheel bearing lock nut | | | | | | | | | | | | A | | | 12 |
| Wheel nut | | | A | | T: First 1,000 miles (1,600 km) | | | | | | | | | | 2 |
| Wheel disc damage | | | A | | | | | | | | | | | | 2 |

**Maintenance operations:** **A** = Check and adjust if necessary; **I =** Inspect, clean and correct or replace as necessary; **L** = Lubricate; **R** = Replace or change; **T** = Tighten to specified torque

| **SERVICE INTERVALS:** | Odometer ranging | First | Every | | | | | | | | | | | Months (every) |
|---|---|---|---|---|---|---|---|---|---|---|---|---|---|---|
| (Odometer reading or months, | Miles (x 1,000) | 3 | 6 | 9 | 10 | 12 | 15 | 18 | 20 | 24 | 30 | 36 | 50 | 72 | |
| whichever comes first.) | Kilometers (x 1,000) | 5 | 10 | 15 | 16 | 20 | 25 | 30 | 32 | 40 | 50 | 60 | 80 | 120 | |
| **SUSPENSION** | | | | | | | | | | | | | | | |
| Leaf spring damage and deformation | | | A | | | | | | | | | | | | 2 |
| Tightness of spring brackets | | | | | | | | A | | | | | | | 6 |
| Spring pin and shackle pin wear | | | | | | | | | | | | A | | | 12 |
| Tightness of spring pin fitting nut and lock nut | | | A | | | | | | | | | | | | 2 |
| Shock absorber mounting | | | A | | | | | | | | | | | | 2 |
| Spring pin and shackle pin (Front and rear) | | | L | | | | | | | | | | | | 2 |
| Tightness of U-bolt and clip bands | | A | | | | | | | | | | A | | | 12 |
| Spring slide seat | | | L | | | | | | | | | | | | 2 |
| Shock absorber function and damage | | | | | | | | | | | | A | | | 12 |

H1-A038E01.book 53 ページ ２０１６年１０月１９日 水曜日 午後５時２６分

**Maintenance operations:** **A** = Check and adjust if necessary; **I =** Inspect, clean and correct or replace as necessary; **L** = Lubricate; **R** = Replace or change; **T** = Tighten to specified torque

| **SERVICE INTERVALS:** | Odometer ranging | First | Every | | | | | | | | | | | Months (every) |
|---|---|---|---|---|---|---|---|---|---|---|---|---|---|---|
| (Odometer reading or months, | Miles (x 1,000) | 3 | 6 | 9 | 10 | 12 | 15 | 18 | 20 | 24 | 30 | 36 | 50 | 72 | |
| whichever comes first.) | Kilometers (x 1,000) | 5 | 10 | 15 | 16 | 20 | 25 | 30 | 32 | 40 | 50 | 60 | 80 | 120 | |
| **AIR SUSPENSION** | | | | | | | | | | | | | | | |
| Looseness, excessive play, or damage of mounting or joint of the suspension (Air spring, shock absorber) | | A: Every 3,000 miles (5,000 km) | | | | | | | | | | | | | 3 |
| Torque rod rubber bushing crack | | | | I | | | | | | | | | | | 12 |
| Radius rod rubber bushing crack and looseness | | | | A | | | | | | | | | | | — |
| Suspension arm crack and looseness | | | | A | | | | | | | | | | | — |
| Transverse rod rubber bushing crack and looseness | | | | | A | | | | | | | | | | — |
| Air bellows height | | | | | | | | | | | | A | | | 12 |
| Levelling valve function | | | | | | | | | | | | A | | | — |
| Tightness of U-bolt and spring band | | | | | | | | T | | | | | | | — |
| Suspension U-bolt and spring band | | T: First 600 miles (1,000 km) | | | | | | | | | | | | | — |
| Suspension parts | | R: Every 120,000 miles (200,000 km) (Consult your Hino dealer) | | | | | | | | | | | | | 24 |

H1-A038E01.book 54 ページ ２０１６年１０月１９日 水曜日 午後５時２６分

**Maintenance operations:** **A** = Check and adjust if necessary; **I =** Inspect, clean and correct or replace as necessary; **L** = Lubricate; **R** = Replace or change; **T** = Tighten to specified torque

| **SERVICE INTERVALS:** | Odometer ranging | First | Every | | | | | | | | | | | | Months (every) |
|---|---|---|---|---|---|---|---|---|---|---|---|---|---|---|---|
| (Odometer reading or months, | Miles (x 1,000) | 3 | 6 | 9 | 10 | 12 | 15 | 18 | 20 | 24 | 30 | 36 | 50 | 72 | |
| whichever comes first.) | Kilometers (x 1,000) | 5 | 10 | 15 | 16 | 20 | 25 | 30 | 32 | 40 | 50 | 60 | 80 | 120 | |
| **CHASSIS FRAME** | | | | | | | | | | | | | | | |
| Cracking and deformation of frame | | | | | | | | | | | | I | | | 12 |
| Tightness of bolts | | | | | | | | | | | | T | | | 12 |
| **ELECTRICAL EQUIPMENT** | | | | | | | | | | | | | | | |
| Battery terminal | | | | | | | | I | | | | | | | 6 |
| Battery charging | | | | | | A | | | | | | | | | 4 |
| Starter bearing grease | | | | | | | | | | | | I | | | 12 |
| Starter brush | | | | | | | | | | | | | | I | 24 |
| Alternator (Brush type) | R: Every 250,000 miles (400,000 km) | | | | | | | | | | | | | | — |
| Alternator (Brush-less type) | R: Every 250,000 miles (400,000 km) | | | | | | | | | | | | | | — |
| Wiring, connectors and clips tightness and damage | | | | | | | | | | | | A | | | 12 |
| Engine cylinder block heater harness terminal | | | | | | | | | | | | | | I | 24 |
| **CAB** | | | | | | | | | | | | | | | |
| Rear cab mounting support bolts | | | | | | | | A | | | | | | | 6 |
| Rear cab mounting brackets, cushion rubber mounting bolt and nut | | | | | | | | A | | | | | | | 6 |
| **AIR FLOW, HEATING AND AIR CONDITIONER** | | | | | | | | | | | | | | | |
| Refrigerant amount of air conditioner | | | | | | | | | | | | I | | | 12 |
| Air filter | I: Every 3,000 miles (5,000 km) | | | | | | | | | | | | | | 1 |

**Maintenance operations:** **A** = Check and adjust if necessary; **I =** Inspect, clean and correct or replace as necessary; **L** = Lubricate; **R** = Replace or change; **T** = Tighten to specified torque

| **SERVICE INTERVALS:** | Odometer ranging | First | Every | | | | | | | | | | | Months (every) |
|---|---|---|---|---|---|---|---|---|---|---|---|---|---|---|
| (Odometer reading or months, | Miles (x 1,000) | 3 | 6 | 9 | 10 | 12 | 15 | 18 | 20 | 24 | 30 | 36 | 50 | 72 | |
| whichever comes first.) | Kilometers (x 1,000) | 5 | 10 | 15 | 16 | 20 | 25 | 30 | 32 | 40 | 50 | 60 | 80 | 120 | |
| **NOISE EMISSION CONTROL MAINTENANCE SCHEDULE** | | | | | | | | | | | | | | | |
| High idling speed | | | | | | | | | | | | A | | | 12 |
| Cooling fan | | | | | | | | | | | | A | | | 12 |
| Air intake system hose and clamps | | | | | | A | | | | | | | | | 4 |
| Air cleaner element | | | | | | | | | | | | R | | | 12 |
| Exhaust manifolds mounting nuts | | | | | | | | | | | | T | | | 12 |
| Muffler with catalyst and exhaust pipe clamps | | | | | I | | | | | | | | | | 6 |
| Splash shields and under hood insulator | | | | | | | | | | | | A | | | 12 |

## Noise emission control

### NOISE EMISSION CONTROL SYSTEM

The following are the requirements of Federal noise emission standards for vehicles which have a gross vehicle weight rating (GVWR) in excess of **10,000 lbs. (4,536 kg)** to minimize deterioration of the noise emission control system during the operation. The maintenance items on the noise emission control system are listed in “Table 1: Recommended maintenance service” on page 6-43.

The noise emission control system warranty is mentioned in your service and warranty booklet.

***NOTICE:***

*The Federal noise emission standards apply to vehicles sold in the United States of America.*

### TAMPERING WITH THE NOISE CONTROL SYSTEM IS PROHIBITED

Federal law prohibits the following acts or the causing there of:

The removal or rendering inoperative by any person other than for purposes of maintenance, repair or replacement of any device or element of design incorporated into any new vehicle for the purpose of noise control, prior to its sale or delivery to the ultimate purchaser or while it is in use.

The use of the vehicle after such device or element of design has been removed or rendered inoperative by any person.

Among those acts presumed to constitute tampering are the acts listed below.

**Insulation**

Removal of splash shields or under hood insulation.

**Engine**

Removal or rendering the engine control ECU governor inoperative so as to allow engine speed to exceed manufacturer specifications.

Removal or rendering a soldered engine calibration chip of ECU.

**Cooling fan and fan drive**

Modification of the fan (outside diameter, number and/or shape of fan blades).
Removal or rendering fan clutch in operative.

**Intake system**

Removal or modification of the air cleaner.
Removal of the air induction system components.

**Exhaust system**

**⚠ WARNING**

- **Exhaust gases and fumes from the engine contain carbon monoxide, a colorless, odorless gas which is very harmful.**
- **Inhaling the exhaust gases or fumes may cause unconsciousness resulting in death.**
- **Improper maintenance of the exhaust system, as well as a damaged or corroded exhaust system can allow carbon monoxide to enter the cab.**
- **Never idle the engine in a closed area without sufficient ventilation.**
- **If you believe there is a malfunction in your exhaust system, immediately open all windows and rear ventilators and contact your Hino dealer for the inspection.**

Removal or rendering inoperative the exhaust system components including muffler, exhaust pipe, and clamps.

**MAINTENANCE OF NOISE EMISSION CONTROL SYSTEM**

**Splash shield, under hood insulation**

Visually check the shields and under hood insulation for any damage or looseness.

If you find any problem, have them replaced or cleaned.

**Cooling fan**

- Visually check the cooling fan for any damages, and have it replaced if damaged.
- Check the cooling fan mounting bolts for looseness, and have them tightened if necessary.

**Intake system**

- Check the intake system components such as ducts, hoses, resonator air cleaner, intake manifold, clamps and fasteners for any damages. Have them replaced by your Hino dealer if necessary
- Check if the hose clamps and fasteners are not loosened.
- Check if the air cleaner dust cover is installed securely.
- Check the rubber gasket in the dust cover for any deterioration. Have them replaced by your Hino dealer if necessary.

**Exhaust system**

Visually check the exhaust system for any damages, missing or mispositioned parts, loosened connections, open seams, holes, loosened fasteners, or deformed or plugged outlets. Have them replaced or tightened by your Hino dealer if necessary.

Have the exhaust system checked by Hino dealer for any leakage of exhaust gas from various joint connection and have the clamps of the joint connection tightened if they are loosened.

Make visual check for any cracks or holes in DPR cleaner and tail pipe.

Be sure to replace the damaged parts with Hino genuine parts. The position of the tail pipe elbow or offset tail pipe shall not be changed from the original position.

If you find any abnormal engine sounds, immediately contact your Hino dealer for the service.

## Cooling system

**⚠ WARNING**

**To keep the engine cooling system functioning properly, be sure to perform periodic maintenance of the cooling system. Otherwise, the engine could be damaged or become overheated while driving.**

Engine coolant allows the engine to run at the proper operating temperature.

Therefore, periodic maintenance of the engine coolant, as discussed below, must be performed.

Running the engine at an extremely high temperature may damage the engine.

The proper selection and use of Long Life Coolant (LLC) is very important to prevent corrosion of the cooling system and clogging of the radiator. In cold weather it is necessary to protect the engine, radiator, and pipes from freezing.

### REGULAR REPLACEMENT COOLANT

There are two types of “Hino Genuine Long Life Coolant”, pink colored type and blue colored type.

Pink colored type coolant requires that maintenance be performed every 36 months or 360,000 miles (600,000 km) whichever comes first., Blue colored type coolant requires maintenance be performed every 48 months or 500,000 miles (800,000 km) whichever comes first (See page 6-161).

### COOLANT TYPE

**⚠ CAUTION**

**Use “Hino Genuine Long Life Coolant” or similar high quality ethylene glycol based non-silicate, non-amine, non-nitrite, and non-borate coolant with long-life hybrid organic acid technology. The use of improper coolant could damage the vehicle cooling system due to corrosion or clogging, resulting in damage to the engine.**

**Consult your Hino dealer to obtain “Hino Genuine Long Life Coolant.”**

***NOTICE:***

- *Do not use alcohol type antifreeze.*
- *Do not mix Hino Genuine Long Life Coolant (LLC) with antifreeze, anti rust and non-genuine LLC.*
- *Do not use water as coolant.*

**Precautions for handling Long Life Coolant**

**⚠ CAUTION**

- **Long Life Coolant is poisonous. Never swallow it. If ingested immediately contact a physician. If the Long Life Coolant gets into the eye, immediately flush with fresh water and contact a physician.**
- **Long Life Coolant is flammable. Keep the coolant away from an open flame.**
- **If Long Life Coolant comes in contact with skin immediately flush with clean water.**
- **Tighten the Long Life Coolant container cap after use. Store and keep the container away from children.**
- **If Long Life Coolant comes in contact with a painted part of the vehicle, flush immediately with water.**
- **To maintain proper functioning of the cooling system, be sure to replenish Long Life Coolant with a mixing ratio at least 50% and up to 60% of Long Life Coolant to water.**

**Cooling system capacity:**

| Transmission type | Capacity | |
|---|---|---|
| | US Qt | Liter |
| Manual | 28.8 | 27.3 |
| Automatic | 28.3 | 26.8 |

The thermostat controls the coolant flow to the radiator, and thereby maintains the proper coolant temperature.

**Non-use of a radiator grille cover**

**⚠ CAUTION**

**Never use a radiator grille cover. Using a radiator cover while the engine is running may cause engine overheating.**

**Non-change of the preset rate of speed of the engine or radiator cooling fan**

**⚠ CAUTION**

**Never change the preset rate of the speed of the engine or radiator cooling fan by modifying the crankshaft or fan pulleys. Otherwise, the cooling fan blades could break due to fatigue, resulting in damage to the cooling fan blade.**

## Fuel system

**⚠ WARNING**

**To reduce risk of fire, be sure to observe the following.**

- **Never smoke when performing maintenance on the fuel system.**
- **Keep all components and parts of the fuel system away from an open flame.**

**⚠ CAUTION**

**To maintain the proper functioning of the DPR (Diesel Particulate Active Reduction system), use only ultra low sulfur diesel fuel (the sulfur is less than 15 ppm (0.0015%) by weight).**

**Use ASTM 2-D diesel fuel**

- Use diesel fuel with cetane number 45 or higher.
- When using biodiesel fuel, see “Table 8: Requirements of biodiesel fuel usage” on page 6-109, and please consult your Hino dealer.

**⚠ CAUTION**

**Use of certain biodiesel fuel may damage the exhaust system. Be sure to contact your Hino dealer and follow the dealer's instructions regarding the use of biodiesel fuel before you use the biodiesel fuel with your vehicle.**

| Temperature | Fuel grade |
|---|---|
| Above +20°F (-7°C) | Grade Low Sulfur Grade 2-D S15 |
| Below +20°F (-7°C) | Grade Low Sulfur Grade 1-D S15 |

**⚠ CAUTION**

**To maintain proper functioning of the fuel system, be sure to follow the instructions below.**

- **Never use engine oil additives or break-in oil.**
- **If gasoline is put into the fuel take by mistake, completely drain the fuel from the fuel system.**
- **Keep fuel clean and prevent water, rain or snow from entering the fuel system while the fuel is stored in the fuel system.**
- **Always screw on the fuel tank cap securely after filling and while fuel is stored in the fuel system.**

***NOTICE:***

- *If long engine idle operation, operation in temperatures below 32°F (0°C), or operation in high altitude areas (above 5,000 ft., 1,500 m), is anticipated, use winterized 2-D diesel fuel.*

**Fuel filter with water separator**

The vehicle is equipped with a fuel filter and water separator. The fuel filters remove dirt and the water separator removes water from fuel.

**⚠ WARNING**

- **Be sure to perform periodic maintenance of the fuel filters at the proper intervals. Otherwise, the fuel filter could become clogged and the fuel supply to the vehicle discontinued.**
- **Depending on the condition of your vehicle, more frequent maintenance intervals than set forth on page 6-43 may be required. Contact your Hino dealer for the further information regarding the maintenance intervals for the fuel filter.**
- **Be sure to use and maintain the Hino genuine fuel filter properly. Using improper fuel filters could cause fuel leakage resulting in serious burns or death due to fire and also could shorten the life of the engine and/or fuel injection system.**
- **To reduce the risk of fire, always drain fuel into a container and dispose of it properly. Be careful not to spill any of the fuel on the vehicle components. Be sure to wipe off the fuel if it is spilled on engine parts.**
- **Never smoke when performing maintenance on the fuel system.**
- **Keep all components and parts of the fuel system away from an open flame.**
- **After replacing the fuel filter, be sure to visually check the external surface of the fuel filter for any damages. Using a damaged fuel filter could cause fuel leakage, resulting in afire in a vehicle accident.**

- **After replacing the element of fuel filter, be sure to keep the engine running for three minutes. Then turn off the engine and check the fuel filter for any sign of fuel leakage.**
- **Never expose the fuel filter to brake fluid and organic solvents (such as parts cleaner and paint thinner) to prevent the filter cover from cracking resulting in a fire.**

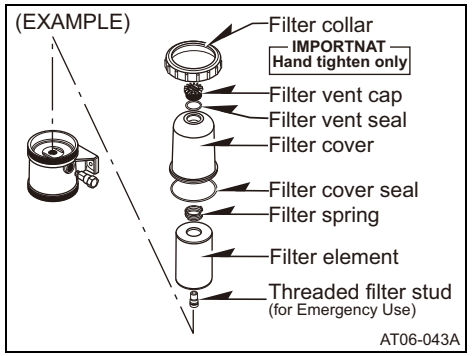


**Air bleeding (Chassis side)**

1. Remove the filter vent cap from the top of the filter cover by turning the vent cap counterclockwise.
2. Pour the full of clean fuel into the filter cover. Reinstall the filter vent cap and tighten by hand only.
3. Start the engine and keep the engine running for at least 2 minutes until the lubrication system reaches its normal operating pressure.
4. With the engine running after the air is removed, loosen the filter vent cap.
5. Tighten the filter vent cap until the filter vent cap will not be tightened further with click sounds.

**Fuel level:** 0.5—1.5 inches above the top of the filter collar.

## Lubrication—

Lubrication of the vehicle is very important for the maintenance of the vehicle.

**Waste oil disposal**

Be sure to dispose of used lubricants in compliance with local regulations. If you have any concerns regarding waste oil disposal, contact your Hino dealer.

## —Engine oil and oil filter

**Engine oil recommendations**

To maximize the performance of your engine, “Hino Genuine Motor Oil” is recommended. Contact your Hino dealer for further details about “Hino Genuine Motor Oil.”

Be sure to use the proper lubricant for your engine as designated below.

**Oil grade:**

| | |
|---|---|
| API | CJ-4 |
| JASO | DH-2 |
| ACEA | E-6, E-9 |

Use ultra low sulfur diesel fuel (0.0015% (15 ppm) by weight) only.

Use low-ash fuel (ash must be less than 1% in weight) only.

Never use either engine oil additive or break-in oil.

**Oil viscosity:**

**Selection of oil based upon the outside temperature during operation**

See SAE designated viscosity numbers. SAE 10W-30 is generally recommended for your engine. However, you should select a suitable oil viscosity depending on the highest and lowest outside temperatures when you are driving the vehicle. See the chart below.

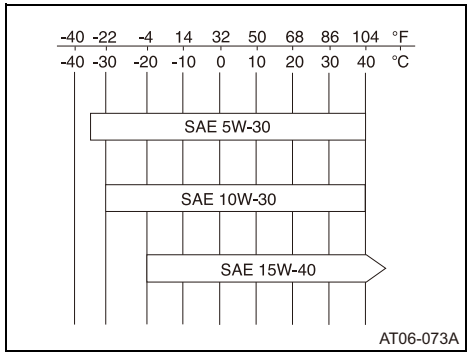

A-06-2.fm 64 ページ ２０１６年１０月２６日 水曜日 午前１０時６分

**Viscosity recommendations (SAE)**

If, at the time you begin driving your vehicle, the outside temperature is 90°F (32°C) or higher, use SAE 15W-40.

**Selection of oil based upon the engine oil temperature during operation**

If, at the time you start your vehicle's engine, the oil temperature is below 32°F (0°C), use SAE 5W-30, 10W-30, 15W-40.

If, at the time you start your vehicle's engine, the oil temperature is below 9°F (-23°C), use SAE 5W-30, 10W-30 with an oil immersion heater. See page 3-10.

**Engine oil capacity (Drain and refill):**

| | US Qt | Liter |
|---|---|---|
| With filter | 16.2 | 15.2 |
| Without filter | 13.3 | 12.5 |

**Replacement service interval oil and filter**

The first replace of:
Hino genuine motor oil: 3,000 miles (5,000 km)

**Periodic service interval in miles (km):**

| Type of operation | Hino genuine motor oil | Non-genuine motor oil |
|---|---|---|
| Type 1 | 12,000 (20,000) | 6,000 (10,000) |
| Type 2 | 20,000 (32,000) | 10,000 (16,000) |

**TYPE OF OPERATION DETAILS**

**Type 1**

a. Un-paved road
b. Dusty road
c. Heavy long distance transport
d. Mountain road operations
e. Short-haul distribution operations
f. Construction site operations (off-road)
g. Light duty or city operations
h. Monthly mileage up to 10,000 miles (16,000 km)

**Type 2**

a. Light long duty distance transport
b. Mainly on interstate highways and express highways
c. Monthly mileage more than 10,000 miles (16,000 km)
d. Paved and flat road operations

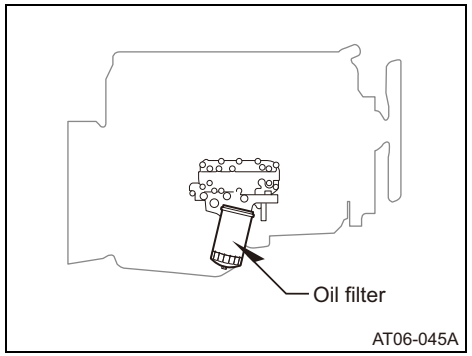


### OIL FILTER

**⚠ CAUTION**

**Use Hino genuine oil filters or the equivalent only. Use of an improper oil filter may cause premature wear or damage to the engine.**

### REPLACE ENGINE OIL FILTER

**⚠ WARNING**

**To avoid burns or serious injury, wait until the engine oil is completely cooled down before starting to replace the filter. Engine oil could be still very hot immediately after driving.**

**To reduce risk of fire, be sure to follow the instructions below.**

- **To avoid damaging the oil filter during installation, never twist the filter gasket.**
- **Always use a new oil filter element during filter replacement.**
- **Wipe off any oil spilled on vehicle components.**
- **Never drive the vehicle with the filler cap and/or level gauge removed.**

**⚠ CAUTION**

**Do not run the engine with the oil level below the “ADD” mark or over the “FULL” mark. Otherwise, the vehicle could be damaged.**

Replace the engine oil and oil filter in the following order:

1. Park the vehicle on safe and level ground.

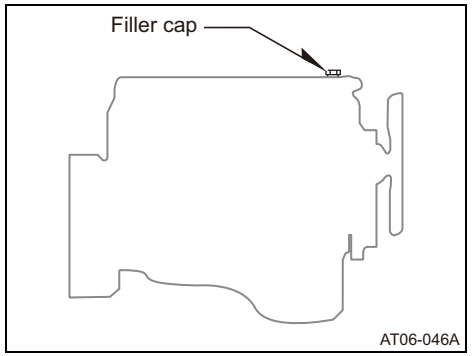


2. Remove the filler cap.

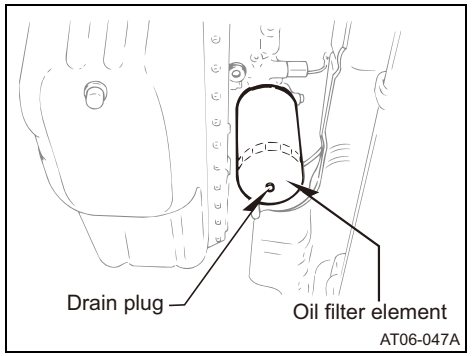


3. Place a container for waste oil under the oil filter and then drain the oil by loosening the drain plug located at the lower part of the oil filter.
4. Turn the oil filter element counterclockwise with an oil filter wrench as specified below and remove the oil filter.

**PART NUMBER OF WRENCH**
S0950-31110-B

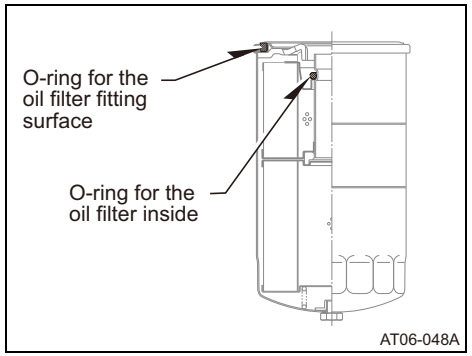


5. Remove the O-ring on the oil filter fitting surface and the O-ring inside the oil filter, if they are left on the oil cooler body.

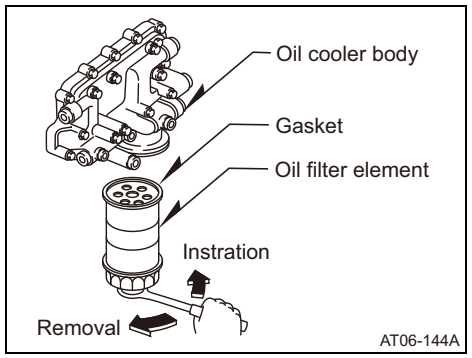


6. Clean any dust, dirt or debris off the contacting face of the gasket on the oil filter element containing the oil cooler body.
7. Install the new oil filter element and spread the engine oil (see “Table 5: Lubricants capacity” on page 6-102 (Drain and Refill)) onto the juncture of the gasket of the new oil filter element.
8. Install the new oil filter element on the oil cooler body by turning it slightly clockwise by hand until the new oil filter element comes in contact with the sealing face of the oil cooler body. From this position, turn the new oil filter element between 3/4 and 1 turn using an oil filter wrench.
9. Turn on the engine and keep the engine running until the pointer of the engine coolant temperature gauge comes within the normal operating temperature zone (see page 2-64 “Engine coolant (water) temperature gauge” for details) and then turn off the engine and wait for ten minutes.
10. Check the oil filter for any leakage of oil.

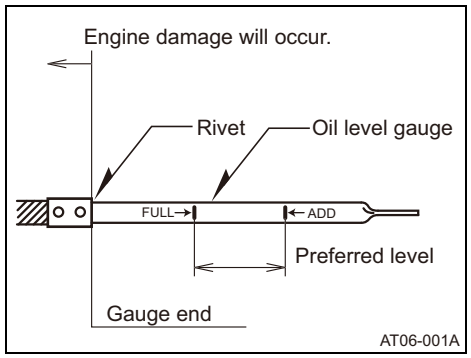


11. Since the oil level goes down after the oil filter and the oil cooler are replaced, recheck the engine oil level and fill the oil up to the “**FULL**” mark.

## —Transmission lubrication

**Manual transmission—**
**FS-5406A and FS-6406A models**

**⚠ WARNING**

**Transmission oil is flammable. Keep the transmission oil away from an open flame to prevent a fire resulting in serious injury or property damage.**

**⚠ CAUTION**

- **To maintain proper functioning of the transmission, never mix transmission oil with engine oil.**
- **Never mix one type of the transmission oil with another type of transmission oil.**
- **Never overfill with transmission oil. Otherwise, the overflowed transmission oil could spill from the front bearing cover.**

Transmission oil is circulated through the motion of gears and shafts. Drain and replace the transmission oil at least at the intervals set forth on page 6-43.

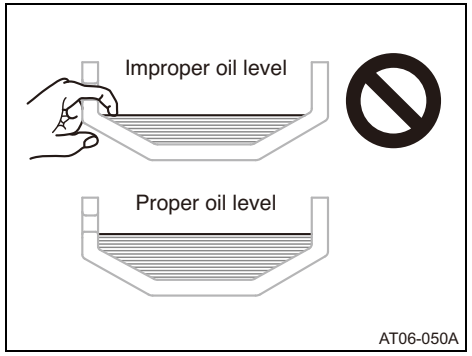


**Draining the transmission oil**

1. Clean the transmission case around the drain plug and remove the drain plug from the side of case.
2. Drain the transmission oil while the oil is warm.
3. Clean the drain plug and reinstall the drain plug securely with a torque wrench.

**Tightening torque:** N·m (lbf·ft, kgf·cm)

**Drain plug:**
62—74 (45—55, 635—755)

H1-A038E01.book 69 ページ ２０１６年１０月１９日 水曜日 午後５時２６分

**Refill the transmission oil**

1. Clean the transmission case around the filler plug and remove the filler plug from the side of case.
2. Fill the transmission oil up to the bottom of the filler opening. If the transmission has two filler openings, fill the transmission oil up to the bottom of both filler openings.
3. Reinstall the filler plug securely with the torque wrench.

**Tightening torque:** N·m (lbf·ft, kgf·cm)

**Filler plug:**
34—46 (25—35, 350—470)

**1. Lubrication change and inspection: Manual transmission (mineral oils)**

| | |
|---|---|
| **Highway use** | |
| First 3,000 to 5,000 miles (5,000 to 8,000 km) | Replace transmission oil on new units. |
| Every 10,000 miles (16,000 km) | Inspect oil level. Check for leaks. |
| Every 50,000 miles (80,000 km) | Replace transmission oil. |
| **Off-highway use** | |
| First 30 hours | Replace transmission oil on new units |
| Every 40 hours | Inspect oil level. Check for leaks. |
| Every 500 hours | Replace transmission oil where severe dirt conditions exist. |
| Every 1,000 hours | Replace transmission oil (Normal off-highway use). |

Oil filter should be changed at each oil change on units equipped with optional external oil filter.

**2. Recommended lubrications: Manual transmission (mineral oils)**

| Type | Grade (SAE) | Fahrenheit (Celsius) Ambience Temperature |
|---|---|---|
| Heavy duty engine oil<br>MIL-L-2104D, API-CD, or Cat TO-4 | 50 | Above 10°F (-12°C) |
| | 40 | Above 10°F (-12°C) |
| | 30 | Below 10°F (-12°C) |
| Automotive gear oil API-MT-1 | 80W-90 | Above 10°F (-12°C) |
| | 75W | Below 10°F (-12°C) |
| **Additive and friction modifiers must not be introduced. Never mix engine oils and gear oils in the same transmission.** | | |

The use of lubricants not meeting these requirements will affect warranty coverage.

**3. Lubrication change and inspection: Manual transmission (synthetic oils)**

| | |
|---|---|
| **Highway use** | |
| Every 10,000 miles (16,000 km) | Inspect oil level. Check for leaks. |
| Every 500,000 miles (800,000 km) or 5 years | Replace transmission oil. |
| **Off-highway use** | |
| Every 40 hours | Inspect oil level. Check for leaks. |
| Every 2,000 hours or 5 years | Replace transmission oil (Normal off-highway use). |

**4. Recommended lubrications: Manual transmission (synthetic oils)**

| Type | Grade (SAE) | Fahrenheit (Celsius) Ambience Temperature |
|---|---|---|
| Mobil Delvac Synthetic Transmission Fluid 50,<br>Shell SPIRAX GSX SAE 50,<br>Eaton Roadranger SAE 50,<br>Eaton Approved Synthetic Transmission Oil,<br>or equivalent. (See Eaton Lubrication Manual for detail) | 50 | All |
| **Additive and friction modifiers must not be introduced. Never mix engine oils and gear oils in the same transmission.** | | |

The use of lubricants not meeting these requirements will affect warranty coverage.

**5. Recommended lubrications: Automatic transmission—ALLISON® 2200HS, 2200RDS, 2500HS, 2500RDS, 3000RDS and 3500RDS models**

| Type | Grade (SAE) | Fahrenheit (Celsius) Ambience Temperature |
|---|---|---|
| Automatic transmission fluid | TES 389-approved fluid | — |

**—Automatic transmission fluid and filter change**

| **ALLISON® 2200HS, 2200RDS, 2500HS and 2500RDS** | |
|---|---|
| Every 10,000 miles (16,000 km) | Inspect automatic transmission fluid level. Check for leaks. |
| Every 50,000 miles (80,000 km) or every 24 month | Replace automatic transmission fluid and spin-on filter. |
| **ALLISON® 3000RDS and 3500RDS** | |
| Every 10,000 miles (16,000 km) | Inspect automatic transmission fluid level. Check for leaks. |
| Every 25,000 miles (40,000 km) or every 12 month | Replace automatic transmission fluid, main filter and lube filter. |

**6. Recommended lubrications: Automatic transmission—ALLISON® 2200HS, 2200RDS, 2500HS, 2500RDS, 3000RDS and 3500RDS models**

| Type | Grade (SAE) | Fahrenheit (Celsius) Ambience Temperature |
|---|---|---|
| Automatic transmission fluid | TES 295- approved fluid | — |

**—Automatic transmission fluid and filter change**

| **ALLISON® 2200HS, 2200RDS, 2500HS and 2500RDS** | |
|---|---|
| Every 10,000 miles (16,000 km) | Inspect automatic transmission fluid level. Check for leaks. |
| Every 50,000 miles (80,000 km) or every 24 month | Replace spin-on filter. |
| Every 150,000 miles (240,000 km) or every 48 month | Replace automatic transmission fluid. |
| **ALLISON® 3000RDS and 3500RDS** | |
| Every 10,000 miles (16,000 km) | Inspect automatic transmission fluid level. Check for leaks. |
| Every 75,000 miles (120,000 km) or every 36 month | Replace main filter and lube filter. |
| Every 300,000 miles (480,000 km) or every 48 month | Replace automatic transmission fluid. |

***NOTICE:***

- *Fluid/filter change recommendations for Allison approved TES 389 fluid set forth in the chart on the page 6-72 shall apply to new vehicles containing transmission fluid consisting of a mixture of Allison approved TES 295 fluid with Allison approved TES 389 fluid.*
- *If Allison approved TES 389 fluid is used and then replaces TES 389 fluid with Allison approved TES 295 fluid, the fluid changing recommendations of Allison approved TES 389 fluid shall still apply. At the time of a subsequent fluid change, if old TES 295 fluid is replaced with new Allison approved TES 295 fluid, the fluid/filter change recommendations outlined in 100 percent Allison approved TES 295 fluid shall apply at such time.*
- *Fluid exchanging machines are not recommended or recognized due to variations and inconsistencies that may not guarantee removal of 100 percent of the used fluid.*

## —Front axle

Lubrication and maintenance operation for the front axle.

**⚠ WARNING**

**Park the vehicle on a level and safe place and apply the parking brake firmly. Block all wheels to prevent the vehicle from moving. For your safety, always support the vehicle with safety stands and never work under a vehicle supported only by jacks.**

**Front non-drive axle greasing intervals**

| Component | Interval |
|---|---|
| Ball studs on steering arm, tie-rod ends, and drag link*1 | 6,000 miles (10,000 km) or once a year, whichever comes first |
| King ping and bushings, thrust bearings | 18,000 miles (30,000 km) or once a year, whichever comes first |

*1: Applied to ball studs on Easy Steer Plus axles. Sealed axles require inspection of the boot on the ball stud every 6,000 miles (10,000 km) for wear and damage. Contact your Hino dealer.

**Wheel-end Oil change intervals**

Inspect the oil level every: 1,000 miles (1,600 km)

Change the oil based upon whichever event that happens first:

The seals replaced. the brake linings replaced or at the intervals set forth below.

| Operation | Interval |
|---|---|
| On-Highway | Whichever comes first: Seals replaced, brakes relined, 100,000 miles (160,000 km) or once a year |
| Off-Highway | Whichever comes first: Seals replaced, brakes relined, or once a year |

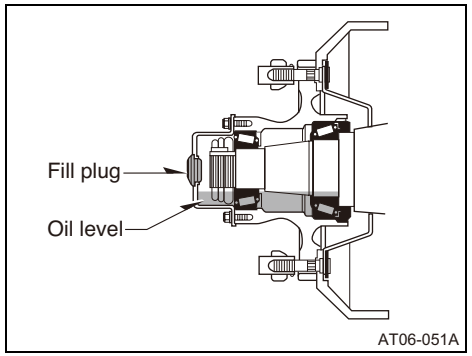


**Oil-lubricated wheel bearing**

1. Check the level on the cap. if the oil level is not at the specified level on the cap, remove the fill plug.
2. Add the oil until it reaches the specified level.
3. Reinstall the fill plug securely.

## —Differential gear oil

**Wheel-end axle greasing intervals**

Grease the wheel-end axles based upon whichever event that happens first: driving the designated distance or at the time intervals specified below, or the seals are replaced or the brake linings are replaced.

| Operation | Interval |
|---|---|
| On-Highway | 30,000 miles (50,000 km) |
| On/Off Highway and Off-Highway | Twice a year |

**Wheel-end Oil change intervals**

Check oil level: 1,000 miles (1,600 km)

**On-Highway operation**

Whichever comes first: Seals replaced,. brakes linings replaced 100,000 miles (160,000 km) or once a year.

**Off-Highway operation**

Whichever comes first: Seals replaced,. brakes linings replaced or once a year.

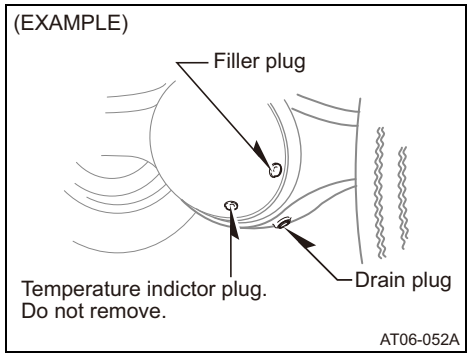


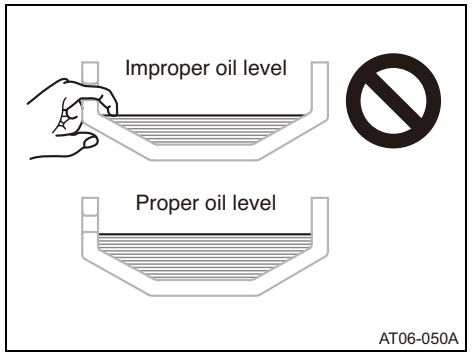


**Replace differential gear oil**

**⚠ WARNING**

**To avoid serious burns or severe injuries to your hands or other parts of your body, wait until the differential gear is fully cooled down before replacing the gear oil.**

1. Park the vehicle on a level and safe place and apply the parking brake firmly.
2. Turn off the engine.
3. Place a suitable container for the used gear oil under the drain plug.
4. Clean around the drain and filler plugs.
5. Remove the filler plug and the gasket.
6. Remove the drain plug, and the gasket and drain the gear oil into the container.
7. Clean the drain plug with a magnet, and tighten it with a new gasket with a torque wrench.

**Tightening torque:** N·m (lbf·ft, kgf·cm)
34—51 (25—37, 350—520)

8. Add the proper differential gear oil up to the lower end of the filler plug hole.

**Gear oil:**
See “Table 7: Recommended lubrication” on page 6-105.

9. Clean the filler plug with a magnet and tighten it with a new gasket with a torque wrench.

**Tightening torque:** N·m (lbf·ft, kgf·cm)
48—67 (35—50, 490—680)

## Air intake system

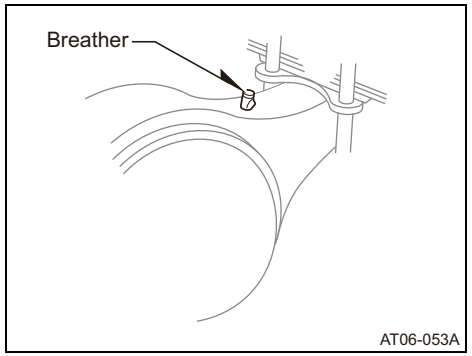


**Check and clean axle housing breather**

Clean the breather if necessary.

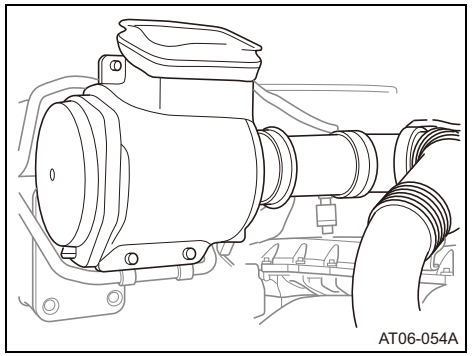


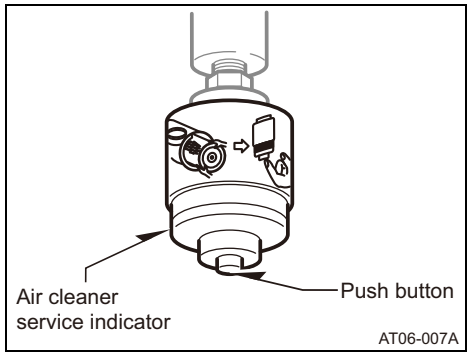


**Air cleaner maintenance (see page 6-11)**

**⚠ CAUTION**

**Be sure to check the condition of the air cleaner element at the proper intervals and replace the air cleaner element with a Hino genuine air cleaner, if necessary. Using a dirty air cleaner element or using an improper air cleaner could cause excessive exhaust smoke and loss of engine output.**

## Electric system

Check the wiring periodically for any damage or deterioration of the insulation.

**⚠ WARNING**

- **Battery fluid is flammable and contains harmful corrosive sulfuric acid. Always observe the precautions applicable to the battery, described on page 4-2.**
- **To avoid death or serious injuries including electric shocks or severe burns, never service, repair or replace the vehicle's battery yourself. Only a Hino dealer should repair or replace the battery.**

(EXAMPLE)

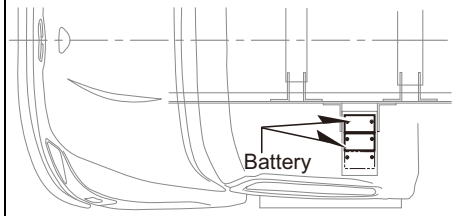


AT06-074A

### BATTERY

Your vehicle is equipped with batteries installed on the brackets of the left side frame. When replacing a battery, use the same model of the battery as the original battery.

**⚠ WARNING**

- **Be sure to wait for at least ten minutes after the key is turned to the "LOCK" position before you disconnect the battery terminals from the battery, as the vehicle data is recorded on the ECU and DCU starts working for the exhaust gas after treatment after the key is turned to the "LOCK" position. Otherwise, the vehicle data will not be recorded on the ECU properly and the DCU will not work properly, which may result in the malfunction of the DPR and the DEF-SCR system.**

- **The MIL (Malfunction Indicator Light) may come on when the key is turned to the "ON" position again, even if you wait for at least ten minutes before disconnecting the battery terminals from the battery after the key is turned to the "LOCK" position. In such a situation, repeat the following procedures three separate times, in the exact same order, to turn off the MIL.**
  1. **Turn the key to the "LOCK" position and keep the key in "LOCK" position for at least 60 seconds.**
  2. **Turn the key to the "ON" position and keep the key in the "ON" position for at least 60 seconds.**

**CHECKING THE BATTERY FLUID LEVEL**

***NOTICE:***
***EXCEPT AGM BATTERY —***

- *Check the battery fluid level and add distilled water as necessary. Do not continue to operate the vehicle with a low battery fluid, as doing so is dangerous.*
- *Do not overfill the cells. Excess electrolyte could squirt out of the battery during heavy charging, causing corrosion or damage.*

***AGM BATTERY—***

- *Do not refill the water in the battery. Do not attempt to open the vents of the battery. Charge voltage limited to 14.6 Volts.*

## Fuses—

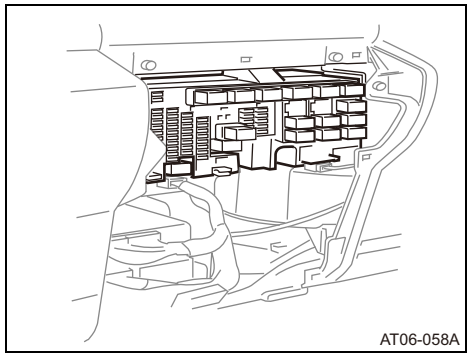


The fuse block is located inside the dashboard in front of the passenger's seat. The cause of a current overload should be determined and corrected before a burned out fuse is replaced.

**⚠ CAUTION**

- **Before replacing a burned-out fuse, be sure to identify the cause of the current overload since it may indicate a vehicle malfunction.**
- **Be sure to use the correct replacement fuse. Otherwise the electric units could be damaged.**

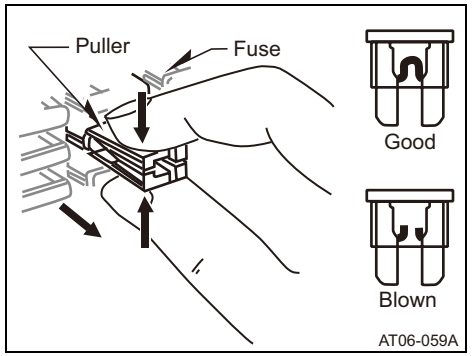


**CHECK THE FUSES**

1. Before checking, turn the key to the "**LOCK**" position and all other switches to the "**OFF**" position.
2. Visually check to determine if the fuse is blown as shown on the above illustration. If the fuse is blown, replace it.

**⚠ CAUTION**

**Never use for replacement fuses with an electrical load capacity other than that specified in the chart on page 6-81.**

## —Fuse block

**The amperage of each fuse is as follows.**

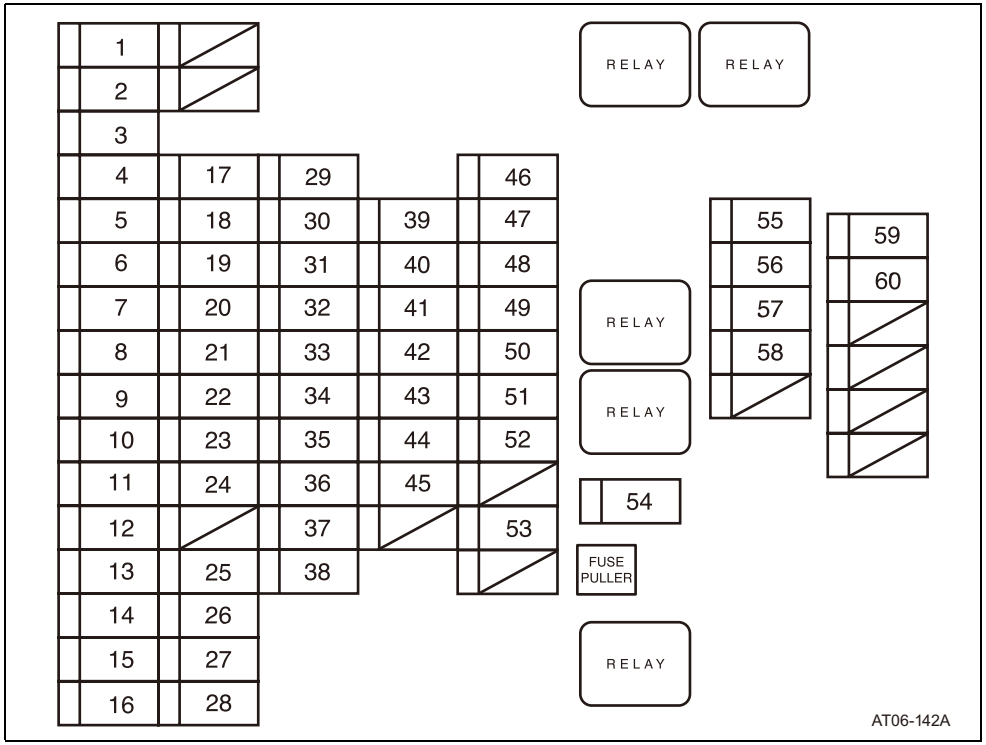


1. **10 A:** Starter switch
2. **5 A:** Head light main relay
3. **5 A:** Head light dimmer relay
4. **10 A:** VCS MAIN
5. **5 A:** Engine ECU ACT 2
6. **30 A:** ABS (BATT)
7. **20 A:** DEF HTR
8. **30 A:** SCR (BATT)
9. **30 A:** Wiper (BATT)
10. **10 A:** TRANS
11. **15 A:** Turn signal lights
12. **10 A:** Stop lights
13. **15 A:** Room light
14. **5 A:** Meter (BATT)
15. **20 A:** CAB +B
16. **10 A:** GCU
17. **10 A:** Headlight main RH
18. **10 A:** Headlight main LH
19. **10 A:** Headlight DIM RH
20. **10 A:** Headlight DIM LH
21. **20 A:** Daytime running light
22. **10 A:** VCS ACT
23. **20 A:** Door lock

H1-A038E01.book 82 ページ ２０１６年１０月１９日 水曜日 午後５時２６分

**24.** **30 A:** Power window
**25.** **10 A:** SCR (MAIN)
**26.** **15 A:** PM SSR
**27.** **20 A:** NOX SSR 1
**28.** **20 A:** NOX SSR 2
**29.** **10 A:** Starter
**30.** **30 A:** Engine ECU MAIN 1
**31.** **30 A:** Engine ECU ACT 1
**32.** **20 A:** Radio
**33.** **5 A:** AIR SUS
**34.** **30 A:** Heater (A/C)
**35.** **5 A:** ABS (BRK-S)
**36.** **20 A:** Tail lights
**37.** **15 A:** Spare (P-TAIL)
**38.** **5 A:** Spare (P-BATT 1)
**39.** **10 A:** Back up light
**40.** **15 A:** Air dryer
**41.** **15 A:** Mirror
**42.** **10 A:** Air conditioning system 1
**43.** **5 A:** DRL MAIN
**44.** **5 A:** Differential lock
**45.** **20 A:** Horn
**46.** **10 A:** METER (MAIN)
**47.** **5 A:** ABS (MAIN)
**48.** **10 A:** BRAKE
**49.** **10 A:** TRANS (MAIN)
**50.** **15 A:** Fog lights
**51.** **15 A:** SPARE (VAN)
**52.** **10 A:** Wiper (MAIN)
**53.** **5 A:** Engine ECU MAIN2
**54.** **30 A:** Spare fuse
**55.** **5 A:** Spare fuse
**56.** **10 A:** Spare fuse
**57.** **15 A:** Spare fuse
**58.** **20 A:** Spare fuse
**59.** **10 A:** Spare(P-ING 1)
**60.** **10 A:** Spare(P-ING 2)

### Additional wiring

**⚠ CAUTION**

**For the installation of an electric device such as a radio or a spotlight, never connect the wires from the terminals of the fuses or circuit breakers which may cause a short circuit of the wire.**

**The terminals for such wiring are provided for in the cab and chassis frame and installation should be performed only by your Hino dealer.**

Capacity of the electric loads which can be added are as follows:

**The power source to the cab: Max. 3.5 A**

**Tail linkage power source to the chassis frame: Max. 10.5 A**

**Van light power source to the chassis frame: Max. 7 A**

**Fog light power source to the cab: Max. 10.5 A**

**Key linkage (ON position) power source to the cab and the chassis frame: Max. 7 A**

### Fusible links

**⚠ CAUTION**

- **Before replacing a fusible link which has a short-circuit, be sure to identify the cause of the current overload since it may indicate a vehicle malfunction.**
- **Be sure to use the correct fusible link for the replacement. Otherwise the electric units could be damaged.**

**Checking fusible links**

1. The fusible links are installed in the fusible link block located on the back of the battery.
2. Before checking, turn the key to the "**LOCK**" position and all other switches to the "**OFF**" position.
3. Visually check to determine if the insulation of the fusible link is blown or melted, which indicates a short-circuit of the fusible link.

**Each fusible link has a connector color which indicates its electrical capacity. Always replace a burned out fusible link with the correct fusible link.**

| Color of connector | Ampere | Quantity |
|---|---|---|
| Pink | FL30A (Cartridge type) | 1 |
| Green | FL40A (Cartridge type) | 2 |
| Red | FL50A (Cartridge type) | 2 |
| Yellow | FL60A (Cartridge type) | 3 |
| Black | FL80A (Cartridge type) | 1 |
| Blue | FL100A (Cartridge type) | 1 |
| Purple | FL140A (Cartridge type) | 1 |

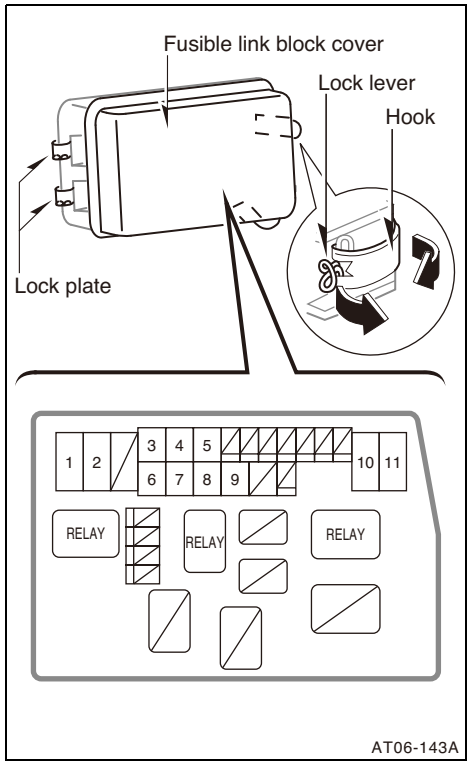

**Remove the fusible block cover**

- Release the hook by pushing the lock lever (2 points).
- Remove the block cover by pulling the lock plate.

**FUSIBLE LINK**

1. **140 A:** BRAKE
2. **60 A:** Power window
3. **30 A:** Fuel heater
4. **40 A:** Head lights
5. **50 A:** MAIN 3
6. **50 A:** STOP TRN HAZ
7. **40 A:** P BAT 1
8. **60 A:** ABS
9. **60 A:** TAIL
10. **100 A:** STA/GLOW
11. **80 A:** MAIN 1

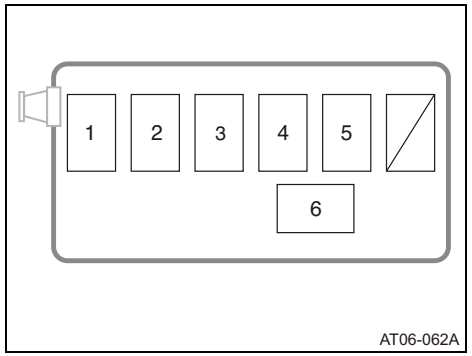


1. **50 A:** Heater (A/C)
2. **40 A:** SCR
3. **60 A:** MAIN 2
4. **40 A:** U2 MAIN
5. **30 A:** U2 ACT
6. **80 A:** Room light

**Service brake system—**

**⚠ WARNING**

**Be sure to have your service brake checked or inspected during your daily vehicle inspection or at least at the intervals set forth at page 6-43. If you use the service brake often, you may need to perform maintenance of the service brake more frequently.**

### —Hydraulic brake type

**⚠ WARNING**

**To avoid death or serious injuries in an accident, be sure to contact your Hino dealer have your service brake inspected if you notice the stopping distance of the vehicle becomes longer.**

Perform the checks and adjustment of wheel brake pad wear at least at the intervals set forth at page 6-43. If you use your brakes with great frequency, check the service brake system more often. If you need brake pads or brake linings replaced, contact your Hino dealer.

### —Full air brake type

**⚠ WARNING**

- **If the air pressure warning light comes on and the beep sounds while driving, pull off the road and stop your vehicle in a safe and level place and contact your Hino dealer immediately.**
- **To maintain proper performance of the service brake, be sure to have the wheel brake lining inspected by your Hino dealer periodically.**
- **Never try to adjust the automatic slack adjusters by yourself when you find the pushrod stroke of the service brake excessive. Excessive push stroke may indicate a problem with the automatic adjuster which cannot be corrected manually. In such a situation, immediately contact your Hino dealer.**
- **If you notice any abnormalities in the automatic slack adjuster, have it inspected and repaired by your Hino dealer.**

### Wheel nuts and bolts

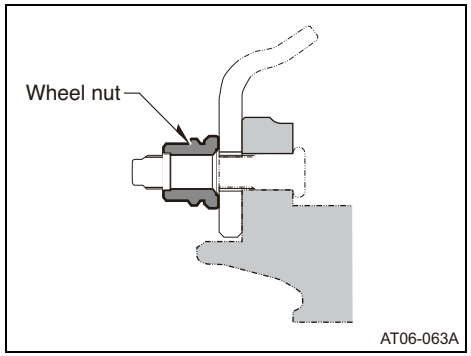


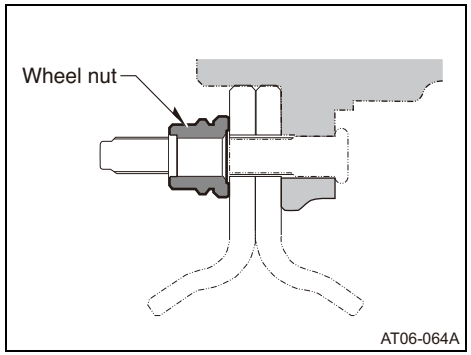

**⚠ WARNING**

- **Replacement of the tires or wheels require tire experts. Before replacement, be sure to consult your Hino dealer.**
- **Be sure to check the wheel nuts, threads of the wheel nuts and bolts for any damage, or looseness in accordance with the procedures used for your daily inspection. Driving the vehicle with the loosened or damaged wheel nuts may cause the wheel and nuts to become damaged and the wheel bolt to break due to fatigue.**
- **If you find any single wheel bolt damaged, be sure to replace all hub bolts of the wheel since all of them could be damaged.**
- **When you purchase your new vehicle, be sure to have your Hino dealer check if the wheel nuts of the vehicle are properly tightened.**
- **Have your Hino dealer check and tighten the wheel nuts when your driving distance reaches 100,500 miles (160, 800 km) and every 1,000 miles (1,600 km) after you have reached 100,500 miles (160, 800 km).**

**Tighten the wheel nuts**

Wheel bolts and nuts on both sides of the vehicle have right-hand threads.

1. Remove dirt and other foreign material from the thread of the wheel bolts and wheel nuts.
2. Apply engine oil or grease to the threads of the wheel bolts and wheel nuts, and to the crowns of the wheel nuts.
3. Tighten the wheel nuts.

(EXAMPLE)

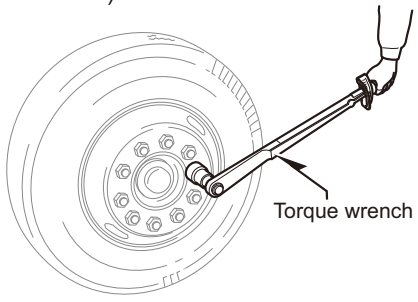


**Tightening torque:** N·m (lbf·ft, kgf·cm)

**Wheel nut:**

610—665 (450—490, 6,200—6,800)

## Tire—

**⚠ CAUTION**

- **When replacing tires, use tires of the same size, construction, load range, and tread design as the original tires of your truck. Otherwise, vehicle handling, brake performance, and riding comfort can be adversely affected and may result in death or serious injury in an accident. When the tire specifications are not clear, contact your Hino dealer.**
- **To avoid hydroplaning, when you drive your vehicle on a slippery or wet road such as on snow, ice, or gravel, drive at low and controlled speed.**

### Wheel and tire balancing

A tire and wheel assembly which is out of balance can cause uneven tread wear or vibration. For wheel and tire balancing or adjustment, see your Hino dealer.

## —Tire inflation pressure

**⚠ WARNING**

**For the safe operation of the vehicle, be sure to check the tire inflation pressure of the tires during your daily inspection and before leaving on a long distance trip, following the procedures set forth below.**

- **While the tires are cold, inflate the tires up to the proper cold pressure designated by the tire manufacturer using an extension hose with gauge and clip-on chuck. Improper inflation of the tires may cause loss of control of your vehicle while driving, resulting in death or serious injuries in an accident.**
- **Always use tire valve stem caps to maintain the proper tire inflation pressure.**

- **If, as a result of your inspection, you find low tire inflation pressure, contact your Hino dealer for an immediate inspection.**
- **Be sure that the total load carried by the front and rear tires does not exceed GAWR and GVWR of the vehicle.**
- **Tire replacement requires expertise, Consult your Hino dealer before the replacement of your tires.**

### —Wheel replacement recommendations

**⚠ WARNING**

- **Always replace damaged disc wheels with new ones. Never weld damaged disc wheels because such welded disc wheels could break while driving, resulting in death or serious injuries in an accident.**
- **When replacing a disc wheel, use a Hino genuine disc wheel and confirm that the replaced disc wheel does not interfere with the axle, suspension or brake parts. Using an improper disc wheel or installing a disc wheel improperly may result in death or serious injuries in accident due to the loss of control of the vehicle.**

### —Front axle alignment

**⚠ CAUTION**

**To maximize the driving performance of your vehicle, be sure to have the front axle alignment adjusted by your Hino dealer at least at service intervals set forth in the chart on page 6-43.**

## Power steering system

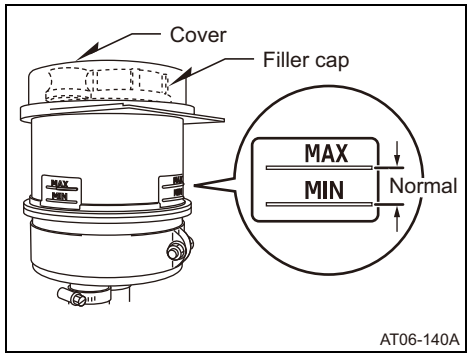


To check the power steering system follow the procedures set forth at page 6-6.

**⚠ WARNING**

- **Before checking the power steering fluid level, wait until the engine and reservoir are completely cooled down.**
- **Before checking the power steering fluid, clean all dirt off the reservoir and filler cap. Otherwise, the fluid may become contaminated and adversely affect the performance of the power steering system resulting in death or serious injury in an accident due to loss of control of the vehicle.**
- **Do not operate the vehicle with a low fluid. A low fluid level may cause damage or premature wear of the power steering system.**
- **Be sure to use the proper fluid (see "Table 7: Recommended lubrication" on page 6-105.)**
- **Never pour water onto reservoir and filler cap to avoid malfunction of the power steering system.**

**Table 2: Standard adjustment dimensions**

| No. | Item | | Standard Dimensions |
|---|---|---|---|
| 1 | Valve clearance (Cold) | Inlet | 0.0118 in. (0.30 mm) |
| | | Exhaust | 0.0177 in. (0.45 mm) |
| 2 | Injection timing | | 0° |
| 3 | Engine low idling speed | | 750 rpm (r/min) |
| 4 | Engine maximum speed (at full load) | | 2,600 rpm (r/min) |
| 5 | Coolant temperature | | 176—212°F (80—100°C) |
| 6 | Clutch pedal height (Distance from the floor to the center top of the pedal) (Available with manual transmission) | | 8.07—8.46 in. (205—215 mm) |
| 7 | Clutch pedal stroke (Distance from the original to the depressed position) (Available with manual transmission) | | 8.07—8.46 in. (205—215 mm) |
| 8 | Clutch pedal play | | 1.7—2.3 in. (44—59 mm) |
| 9 | Wheel alignment toe in | Model:Hino 238, 258LP and 268 (8000 lbs front axle) | 0.04—0.12 in. (1.0—3.0 mm) |
| | | Model:Hino 268 (10000 lbs front axle), 338 and 358 | 0.06—0.14 in. (1.5—3.5 mm) |

| No. | Item | | | Standard Dimensions |
|---|---|---|---|---|
| 10 | Wheel alignment camber | | | 3/16—-11/16 deg |
| 11 | Wheel alignment king pin angle | | Model:Except for Hino 338 | 9.25° |
| | | | Model:Hino 338 | 6.25° |
| 12 | Wheel alignment caster | | | 3—4° |
| 13 | Knuckle turning angle | Inner turn | Model:Hino 238, 258, 268 and 338 | 50—52° |
| | | | Model:Hino 358 (12000 lbs front axle) | 50—52° |
| | | | Model:Hino 358 (13200 lbs, 14000 lbs front axle) | 49—51° |
| | | Outer turn | Model:Hino 238, 258, 268 (8000 lbs front axle) | 36.8° |
| | | | Model:Hino 268 (10000 lbs front axle), 338 | 37.6° |
| | | | Model:Hino 358 (12000 lbs front axle) | 37.6° |
| | | | Model:Hino 358 (13200 lbs,14000 lbs front axle) | 37.2° |
| 14 | Steering wheel play | | | 0—1.38 in. (0—35 mm) |
| 15 | Brake pedal play | | | 0.078—0.196 in. (2—5 mm) |

| No. | Item | | | Standard Dimensions |
|---|---|---|---|---|
| 16 | Brake chamber rod stroke (Maximum) (On front axle) | | Full air brake type | 1.75 in. (44.5 mm) |
| 17 | Brake chamber rod stroke (Maximum) (On rear axle) | | | 2 in. (50.8 mm) |
| 18 | Brake pad thickness | Standard | 4-pad | 0.73 in. (18.5 mm) |
| | | Limit | 4-pad | 0.125 in. (3.2 mm) |
| 19 | Brake lining thickness | Standard | Front | 0.73 in. (18.5 mm) |
| | | | Rear | 0.85 in. (21.6 mm) |
| | | Limit | Front | 0.25 in. (6.3 mm) |
| | | | Rear | 0.25 in. (6.3 mm) |
| 20 | Parking brake lever pull load [Hydraulic brake type] | | | 49.6—60.6 lbf (22.5—27.5 kgf) |
| 21 | Starter brush length | | Standard | 0.807 in. (20.5 mm) |
| | | | Limit | 0.443 in. (11.0 mm) |

H1-A038E01.book 94 ページ ２０１６年１０月１９日 水曜日 午後５時２６分

### Table 3: Tightening torque

**For tightening torques for general purpose also see TABLE 4.**

**Tightening the bolt, apply engine oil to the threads and contact surface.**

| No. | Tightening Position | | | Tightening Torque | | |
|---|---|---|---|---|---|---|
| | | | | N·m | lbf·ft | kgf·cm |
| 1 | Cylinder head bolt | Bolt length 4.941 in. (125.5 mm) | Bolt dai. & pitch 12 mm dia. P1.5 | 59+1/4 turn (90°) +1/4 turn (90°) | 43+1/4 turn (90°) +1/4 turn (90°) | 600+1/4 turn (90°) +1/4 turn (90°) |
| 2 | Crankshaft main bearing cap bolt | | 14 mm dia. P2 | 69+1/4 turn (90°) +1/8 turn (45°) | 51+1/4 turn (90°) +1/8 turn (45°) | 700+1/4 turn (90°) +1/8 turn (45°) |
| 3 | Connecting rod bolt | | 13 mm dia. P1.25 | 69+1/4 turn (90°) +1/8 turn (45°) | 51+1/4 turn (90°) +1/8 turn (45°) | 700+1/4 turn (90°) +1/8 turn (45°) |
| 4 | Camshaft gear bolt | | 12 mm dia. P1.5 | 59+1/4 turn (90°) | 43+1/4 turn (90°) | 600+1/4 turn (90°) |
| 5 | Front engine mounting bracket bolt | | 12 mm dia. P1.75 | 125 | 93 | 1,280 |
| 6 | Cooling jet check valve | | 12 mm dia. P1.5 | 22 | 16 | 220 |

| No. | Tightening Position | | Tightening Torque | | |
|---|---|---|---|---|---|
| | | | N·m | lbf·ft | kgf·cm |
| 7 | Torsional damper fitting bolt | 12 mm dia. P1.5 | 118 | 87 | 1,200 |
| 8 | Flywheel fitting bolt | 14 mm dia. P1.5 | 186 | 137 | 1,900 |
| 9 | Flywheel housing bolt | 10 mm dia. P1.5 | 55 | 41 | 560 |
| 10 | Main idle shaft fitting bolt | 14 mm dia. P2 | 172 | 127 | 1,750 |
| 11 | Sub idle shaft fitting bolt | 12 mm dia. P1.75 | 108 | 80 | 1,100 |
| 12 | Cam idle shaft fitting bolt | 12 mm dia. P1.75 | 108 | 80 | 1,100 |
| 13 | Nozzle clamp fitting bolt | 8 mm dia. P1.25 | 25 | 18 | 250 |
| 14 | Oil pan fitting bolt | 8 mm dia. P1.25 | 30 | 22 | 300 |
| 15 | Oil pan drain plug | 18 mm dia. P1.5 | 41 | 30 | 420 |
| 16 | Glow plug | 12 mm dia. P1.25 | 25 | 18 | 250 |
| 17 | Glow plug harness fitting nut | 4 mm dia. P0.7 | 1.5 | 1.1 | 15 |
| 18 | Cross-head adjust screw nut | 8 mm dia. P1 | 25 | 18 | 250 |
| 19 | Rocker arm adjust screw nut | 8 mm dia. P1 | 25 | 18 | 250 |
| 20 | Rocker support fitting bolt | 10 mm dia. P1.5 | 59 | 43 | 600 |

| No. | Tightening Position | | | Tightening Torque | | |
|---|---|---|---|---|---|---|
| | | | | N·m | lbf·ft | kgf·cm |
| 21 | Cam bearing cap fitting bolt | | 8 mm dia. P1.25 | 31 | 23 | 320 |
| 22 | Exhaust manifold fitting nut | Down side | 10 mm dai. P1.5 | 65 | 48 | 660 |
| 23 | Engine mounting fitting nut (Engine side) | Front | 16 mm dia. P1.5 | 157 | 116 | 1,600 |
| | | Rear | 12 mm dia. P1.25 | 91 | 67 | 930 |
| 24 | Engine mounting fitting nut (Chassis side) | | 12 mm dia. P1.25 | 91 | 67 | 930 |
| 25 | Air compressor gear fitting nut | | 24 mm dia. P1.5 | 353 | 260 | 3,600 |
| 26 | Injection pipe (both and nipples) | | 14 mm dia. P1.5 | 44 | 33 | 450 |
| 27 | Timing gear plate fitting bolt (torques) | | 8 mm dia. P1.25 | 36 | 27 | 370 |
| 28 | Alternator B terminal fitting nut | Brush type | 5/16-18UNC-2A THD | 11 | 8.3 | 115 |
| | | Brush-less type | 5/16-18UNC-2A THD | 9 | 6.6 | 92 |
| 29 | Alternator earth fitting nut | | 1/4-20UNC-2A THD | 6 | 4.4 | 61 |
| 30 | Alternator fitting nut (through bolt) | | 12 mm dia. P1.25 | 69 | 51 | 700 |
| 31 | Starter B terminal fitting nut | | 10 mm dia. P1.5 | 22 | 16 | 220 |
| 32 | Starter C terminal fitting nut | | 6 mm dia. P1.0 | 4.3 | 3.2 | 44 |
| 33 | Rear end plate fitting bolt (torques) | | 10 mm dia. P1.5 | 55 | 41 | 560 |

| No. | Tightening Position | | Tightening Torque | | |
|---|---|---|---|---|---|
| | | | N·m | lbf·ft | kgf·cm |
| 34 | Steering wheel | | 49—78 | 37—57 | 500—800 |
| 35 | Brake spider mounting bolt (Front and rear) [Full air brake type] | | 245—310 | 180—230 | 2,490—3,180 |
| 36 | Parking brake drum mounting bolt [Hydraulic brake type] | 3/8” S – 1611 | 55—75 | 41—55 | 561—765 |
| 37 | Brake mounting bolt [Hydraulic brake type] | 5/8” – 18 | 260—340 | 190—250 | 2,630—3,460 |
| | | 9/16” – 18 | 175—225 | 130—165 | 1,800—2,280 |
| 38 | Wheel bearing end play | | 0.001—0.005 in (0.025—0.127 mm) | | |
| 39 | Axle shaft mounting bolt or nut | Model:Hino 238, 258, 268 | 88—136 | 65—100 | 900—1,385 |
| | | Model:Hino 338, 358 | 203—312 | 150—230 | 2,070—3,180 |
| 40 | Wheel nut | | 610—665 | 450—490 | 6,200—6,800 |
| 41 | Front spring shackle pin nut | | 375—425 | 278—315 | 3,840—4,350 |

| No. | Tightening Position | | | Tightening Torque | | |
|---|---|---|---|---|---|---|
| | | | | N·m | lbf·ft | kgf·cm |
| 42 | Rear spring pin lock nut | | | 203—277 | 151—206 | 2,070—2,830 |
| 43 | Spring U-bolt | Front | | 370—475 | 273—347 | 3,780—4,820 |
| | | Rear | Leaf spring suspension | 490—735 | 361—541 | 5,000—7,490 |
| | | | Air suspension | 545—610 | 405—450 | 5,560—6,220 |
| 44 | Propeller shaft reamer bolt | | 3/8 mm dia | 61—81 | 44—60 | 620—825 |
| | | | 12 mm dia | 143—169 | 104—125 | 1,450—1,725 |
| 45 | Propeller shaft center bearing holder mounting bolt | | | 127.4—156.8 | 94—116 | 1,290—1,587 |
| 46 | Wiper arm nut | | | 17.6—21.6 | 13—16 | 179—220 |
| 47 | Wiper pivot bolt | | | 11.5—16.5 | 8.5—12.1 | 117—168 |
| 48 | Battery terminal | | 8 mm dia | 6—9 | 4.4—7.2 | 58—96 |
| | | | 10 mm dia | 9.5—12 | 7.3—8.6 | 100—120 |
| | | | 3/8 mm dia | 9.5—12 | 7.3—8.6 | 100—120 |

| No. | Tightening Position | | Tightening Torque | | |
|---|---|---|---|---|---|
| | | | N·m | lbf·ft | kgf·cm |
| 49 | Tubeless tire air valve nut | 19.5 × 7.50 wheel | 9.0—14.1 | 6.6—10.4 | 92—144 |
| | | Other wheel | 4.5—6.2 | 3.3—4.6 | 46—63 |
| 50 | Battery carrier mounting bolt | 10 mm dia | 41.5—61.5 | 31—45 | 423—628 |
| | | 12 mm dia | 73—109 | 54—80 | 745—1,112 |
| | | 14 mm dia | 80—120 | 59—88 | 816—1,223 |
| 51 | Battery cover wing nut | 8 mm dia | 2.5—3.5 | 1.8—2.6 | 25—36 |
| 52 | Fuel tank support mounting bolt | 14 mm dia | 91.2—136.8 | 68—100 | 930—1,394 |
| 53 | Fuel tank band fitting nut | 1/2—13 UNC inch dia | 23—29 | 17—21 | 235—296 |

## Table 4: Bolt tightening torque chart (for general purpose)—

| Bolt diameter | BEST TIGHTENING CONDITIONS Even tightening area. Bolt, nut, coating, naked bolt, lubricant, etc. | | | MEDIUM TIGHTENING CONDITIONS Cast iron or aluminum tightening surfaces. | | | POOR TIGHTENING CONDITIONS Tightening area having black coarse surface. Naked bolt or lubricant unavailable. | | |
|---|---|---|---|---|---|---|---|---|---|
| (mm) | N·m | lbf·ft | kgf·cm | N·m | lbf·ft | kgf·cm | N·m | lbf·ft | kgf·cm |
| 3 | 0.5—1 | 6—8.6(lb.in) | 7—10 | 1—1.5 | 8.7—12.1(lb.in) | 10—14 | 1.5—2 | 12.2—15.6(lb.in) | 14—18 |
| 4 | 1.5—2.5 | 14.8—21.6(lb.in) | 17—25 | 2.5—3 | 1.8—2.3 | 25—33 | 3—4 | 2.4—2.9 | 33—41 |
| 5 | 3.5—5 | 2.5—3.6 | 34—51 | 5—7 | 3.7—4.9 | 51—69 | 7—8.5 | 5—6.2 | 69—86 |
| 6 | 5.5—8.5 | 4—6.4 | 55—88 | 8—11 | 6—7.9 | 83—110 | 11—13.5 | 8—10 | 110—140 |
| 8 | 12.5—18.5 | 10—13 | 130—190 | 18.5—25 | 14—18 | 190—260 | 25—31 | 19—23 | 260 – 320 |
| 10 | 25—32 | 18—23 | 250—330 | 37—49 | 28—36 | 380—500 | 49—62 | 37—45 | 500—630 |
| 12 | 42—64 | 32—46 | 430—650 | 64—85 | 47—62 | 650—870 | 85—110 | 63—79 | 870—1,100 |
| 14 | 72—110 | 53—79 | 730—1,100 | 110—145 | 80—108 | 1,100—1,500 | 145—175 | 109—130 | 1,500—1,800 |
| 16 | 110—165 | 80—122 | 1,100—1,700 | 165—225 | 123—166 | 1,700—2,300 | 225—285 | 167—209 | 2,300—2,900 |
| 18 | 155—245 | 116—180 | 1,600—2,500 | 245—325 | 181—238 | 2,500—3,300 | 325—410 | 239—303 | 3,300—4,200 |
| 20 | 225—345 | 167—253 | 2,300—3,500 | 345—460 | 254—339 | 3,500—4,700 | 460—580 | 340—426 | 4,700—5,900 |
| 22 | 305—470 | 225—347 | 3,100—4,800 | 470—630 | 348—462 | 4,800—6,400 | 630—785 | 463—578 | 6,400—8,000 |
| 24 | 410—620 | 304—455 | 4,200—6,300 | 620—825 | 456—607 | 6,300—8,400 | 825—1,080 | 608—795 | 8,400—11,000 |
| 26 | 520—785 | 384—578 | 5,300—8,000 | 785—1,080 | 579—795 | 8,000—11,000 | 1,080—1,375 | 796—1,012 | 11,000—14,000 |
| 28 | 655—980 | 485—723 | 6,700—10,000 | 980—1,375 | 724—1,012 | 10,000—14,000 | 1,375—1,665 | 1,013—1,229 | 14,000—17,000 |
| 30 | 825—1,275 | 608—939 | 8,400—13,000 | 1,275—1,665 | 940—1,229 | 13,000—17,000 | 1,665—2,060 | 1,230—1,518 | 17,000—21,000 |

**—For engine only**

| Bolt size | | The head number of “4” bolt | | | The head number of “7” and “8” bolt | | | The head number of “9” bolt | | |
|---|---|---|---|---|---|---|---|---|---|---|
| | | N·m | lbf·ft | kgf·cm | N·m | lbf·ft | kgf·cm | N·m | lbf·ft | kgf·cm |
| Bolt without washer | 8 mm dia. P1.25 | — | — | — | 28.5 | 21 | 290 | 36 | 27 | 370 |
| | 10 mm dia. P1.25 | | | | 60 | 44 | 610 | 74.5 | 55 | 760 |
| | 10 mm dia. P1.5 | | | | 55 | 41 | 560 | 68.5 | 51 | 700 |
| | 12 mm dia. P1.25 | | | | 108 | 80 | 1,100 | 136 | 101 | 1,390 |
| | 12 mm dia. P1.75 | | | | 97 | 72 | 990 | 125 | 93 | 1,280 |
| | 14 mm dia. P1.5 | | | | 171.5 | 127 | 1,750 | 216 | 159 | 2,200 |
| | 14 mm dia. P2 | | | | 154 | 114 | 1,570 | 199 | 147 | 2,030 |
| Bolt with washer | 6 mm dia. P1 | 6 | 4.4 | 61 | 10 | 7.2 | 100 | 13 | 9.4 | 130 |
| | 8 mm dia. P1.25 | 14 | 10 | 140 | 25 | 18 | 250 | 31 | 23 | 320 |
| | 10 mm dia. P1.25 | 29 | 22 | 300 | 51 | 38 | 520 | 64 | 47 | 650 |
| | 10 mm dia. P1.5 | 26 | 20 | 270 | 47 | 35 | 480 | 59 | 43 | 600 |
| | 12 mm dia. P1.25 | 54 | 40 | 550 | 93 | 69 | 950 | 118 | 87 | 1,200 |
| | 12 mm dia. P1.75 | 49 | 36 | 500 | 83 | 61 | 850 | 108 | 80 | 1,100 |
| | 14 mm dia. P1.5 | 83 | 61 | 850 | 147 | 108 | 1,500 | 186 | 137 | 1,900 |
| | 14 mm dia. P2 | 74 | 54 | 750 | 132 | 98 | 1,350 | 172 | 127 | 1,750 |

**Table 5: Lubricants capacity**

| No. | Item | | | Approximate Capacity | |
|---|---|---|---|---|---|
| | | | | US Qt | Liter |
| 1 | Engine cylinder block | | With filter | 16.2 | 15.2 |
| | | | Without filter | 13.3 | 12.5 |
| 2 | Manual transmission gear case | FS-5406A (6-speed) | Model: Hino 258 and 268 | 9.8 | 9.2 |
| | | FS-6406A (6-speed) | Model: Hino 268, 338 and 358 | 9.8 | 9.2 |
| | Automatic transmission gear case | Allison® 2200HS, 2200RDS, 2500HS and 2500RDS | Model: Hino 238, 258, 268 and 338 | 15.5 | 14.5 |
| | | Allison® 3000RDS and 3500RDS | Model: Hino 268, 338 and 358 | 29.8 | 28.0 |
| 3 | Differential gear case | | RS17-145 | 16.9 | 15.9 |
| | | | RS19-145 | 16.7 | 15.7 |
| | | | RS21-145 | 16.3 | 15.3 |
| | | | RS23-160 | 19.9 | 18.7 |

| No. | Item | | Approximate Capacity | |
|---|---|---|---|---|
| | | | US Qt | Liter |
| 4 | Power steering fluid | Model: Hino 238, 258, 268 (Hydraulic brake type) | 3.29 | 3.1 |
| | | Model: Hino 268 (Full air brake type), 338. 358 | 2.44 | 2.3 |
| 5 | Clutch fluid | | 0.32 | 0.3 |
| 6 | Brake fluid (Hydraulic brake type) | | 3.17 | 3.0 |
| 7 | Refrigerant of air conditioner | | 15.9 oz. | 450 gr. |
| 8 | DEF | | 5.0 gal. | 19 |

**Table 6: Pressure**

| No. | Item | | Pressure | | |
|---|---|---|---|---|---|
| | | | MPa | lb/sq.in | $kg/cm^2$ |
| 1 | Engine oil pressure<br>At coolant temperature: 176°F (80°C) or more | Standard | 0.05—0.49 | 7.11—71.10 | 0.5—5.0 |
| | | Limit | Less than 0.05 | Less than 7.11 | Less than 0.5 |
| 2 | Engine compression<br>At engine revolution: 150 rpm (r/min) | Standard | 3.2—3.4 | 467—496 | 33—35 |
| | | Limit | 2.35 | 341 | 24 |
| 3 | Air pressure | Air dryer type: NABCO® | 0.78—0.88 | 113—128 | 7.95—8.97 |
| | | Air dryer type: Bendix® | 0.76—0.90 | 110—130 | 7.74—9.14 |
| 4 | DEF pressure | | 0.85—0.95 | 123.26—137.75 | 8.7—9.6 |

**Table 7: Recommended lubrication**

| No. | LUBRICANTS | POSITIONS | ATMOSPHERIC TEMP. | S.A.E. NO. |
|---|---|---|---|---|
| 1 | Engine oil<br>API: CJ-4<br>JASO: DH-2<br>ACEA: E-6, E-9<br>See page 6-63 for detail. | Cylinder Block | Above 90°F (32°C) | 15W-40 |
| 2 | Heavy duty engine oil<br>MIL-L-2104D, API-CD, or Cat TO-4 | Eaton Fuller®<br>FS-5406A and FS-6406A | Above 10°F (-12°C) | 50 |
| | | | Above 10°F (-12°C) | 40 |
| | | | Below 10°F (-12°C) | 30 |
| | Automotive gear oil API-MT-1 | | Above 10°F (-12°C) | 80W-90 |
| | | | Below 10°F (-12°C) | 75W |

| No. | LUBRICANTS | POSITIONS | ATMOSPHERIC TEMP. | S.A.E. NO. |
|---|---|---|---|---|
| 3 | Mobil Delvac Synthetic Transmission Fluid 50,<br>Shell SPIRAX GSX SAE 50,<br>Eaton Roadranger SAE 50,<br>Eaton Approved Synthetic Transmission oil, or equivalent (See Eaton Lubrication Manual for detail) | Eaton Fuller®<br>FS-5406A and FS-6406A | All | 50 |
| 4 | Automatic transmission fluid:<br>TES 389 approved fluid | Allison®<br>2200HS, 2200RDS, 2500HS, 2500RDS, 3000RDS and 3500RDS | — | — |
| | Automatic transmission fluid:<br>TES 295 approved fluid<br>(At the production of the new vehicle, Filled TES 295 approved fluid.) | Allison®<br>2200HS, 2200RDS, 2500HS, 2500RDS, 3000RDS and 3500RDS | — | — |

| No. | LUBRICANTS | POSITIONS | ATMOSPHERIC TEMP. | S.A.E. NO. |
|---|---|---|---|---|
| 5 | Axle lubricant<br>Non- Extended Drain Lubricants<br>(Petroleum with EP Additives) (API GL-5)<br>(MIL-PRF-2105E and SAE J2360) | Rear axle | Above 10°F (-12°C) | 85W/140 |
| | | | Above -15°F (-26°C) | 85W/90 |
| | | | Above -40°F (-40°C) | 75W/90 |
| | | | Above 10°F (-12°C)—<br>35°F (2°C) | 75W |
| | | | Above -15°F (-26°C) | 80W/90 |
| | Axle lubricant<br>Extended Drain Lubricants<br>(Petroleum with EP Additives) (API GL-5)<br>(MIL-PRF-2105E and SAE J2360) | Rear axle | Above -15°F (-26°C) | 80W/90 |
| | | | Above -40°F (-40°C) | 85W/90 |
| | | | Above -40°F (-40°C) | 75W/140 |
| | | | Above 10°F (-12°C)—<br>35°F (2°C) | 75W/90 |
| 6 | DEF (Diesel Exhaust Fluid)<br>Only API - supplied logo used | DEF tank | Store<br>Below 100°F (38°C) | ISO22241 |

| No. | LUBRICANTS | POSITIONS |
|---|---|---|
| 7 | Power steering fluid (Dexron® 2 or 3) | Integral Power Steering Gear |
| 8 | Brake and clutch fluid (DOT-3 or DOT-4) | Brake & Clutch |
| 9 | Wheel bearing grease<br>(MIL-G-10924B/18709A) (N.L.G.I.'s No.2 Lithium-soap) | Propeller Shaft Universal Joint and Slip Joint |
| 10 | Heat resistance grease<br>(MIL-G-22615/23549/21164) (N.L.G.I.'s No.2 or No.3) | Clutch Disc Hub Spline, T/M Main Drive Shaft Spline<br>Q-Plus Brake (Retainer Clip, Anchor Pin, Roller (Journal only), Camshaft, Automatic Slack Adjuster, Clevis Pin)<br>Parking Brake (Camshaft, Anchor Pin, Shoe web) |
| 11 | Special grease (Kluber glko) | B-Frame Disc Brake (Guide buss, Caliper body, Piston) |
| 12 | Starter grease (N.L.G.I.'s No.2 Lithium-soap) | Rear bearing, Front bearing, Roller, Retainer, Idle gear, Drive gear, Return spring, Steel ball, Overrunning clutch, O-ring |
| 13 | Bearing grease (N.L.G.I.'s No.2 Lithium-soap) | Clutch Release Sleeve & release Shaft, Starter Bearing |
| 14 | Chassis grease<br>(MIL-G-17740) (N.L.G.I.'s No.1 Calcium or Lithium-soap) | Chassis Grease Fitting |
| 15 | Long Life Coolant | Engine, Radiator |

| No. | LUBRICANTS | POSITIONS | SHELL | MOBIL | EXXON |
|---|---|---|---|---|---|
| 16 | Lithium base disulfide molybdenum grease | Drag Link & Tie Rod Ball Joint | Retinax AM | Mobil Grease Special | Beacon Q2 |

**Table 8: Requirements of biodiesel fuel usage**

**CONDITION OF BIODIESEL FUEL USAGE**

**Up to B5: Available with conditions**

**Above B5 to below B20: Available with conditions**

**DETAILS OF CONDITION**

**Up to B5: Available with conditions**

1. Biodiesel fuel blend stock (B100) must be compliant to ASTM D6751, and blended fuel must be compliant to ASTM D975.
2. Following materials must not be used in fuel or fuel system components.
   Natural rubber, Butyl rubber, Nitrile rubber, Copper, Bronze, Brass, Tin, Lead and Zinc

**Above B5 to below B20: Available with conditions**

**FUEL**

1. Biodiesel fuel blend stock (B100) must be compliant to ASTM D6751, and blended fuel must be compliant to ASTM D7467.
2. Use fuel within 6 months from manufacturing date, in addition, use it up within 3 months after fueling, because the oxidation stability of biodiesel fuel is lower than diesel fuel.
3. When switching to the biodiesel fuel so that the biodiesel fuel tends to dissolve the deposit generated by using usual diesel fuel, it is required that tank and piping are cleaned and fuel filter elements are changed.
4. Clean storage tank thoroughly, and be careful of water and occurrence of microorganisms.

**ENGINE COMPONENT**

1. Periodical cleaning with specified injector cleaner is recommended.
   Injector cleaner {Parts name: Diesel cleaner Parts No: S2367-E0010}
2. Frequently check engine oil level, and if oil dilution occurs, change oil.
   Oil change interval is shorter than usual.
3. An additional fuel filter is recommended. Change the filter at every 10,000 miles (16,000 km) interval.
4. Comparing to regular fuel, more water accumulates in sedimenter, therefore, frequently drain the water from sedimenter.
5. In cold climate, attachment of an appropriate fuel heater is recommended.
6. Following materials must not be used in fuel.
   Natural rubber, Butyl rubber, Nitrile rubber, Copper, Bronze, Brass, Tin, Lead and Zinc

**FUEL DISTRIBUTION**

1. Purchase from fuel handlers licensed under BQ9000.

| | Requirement | Up to B5 | Above B5 to below B20 |
|---|---|---|---|
| Feature | Injection system | #Common Rail 200 MPa<br>Injector Nozzle, Valve DLC | |
| Fuel system | Requirement of fuel property | Fuel should be adopted to biodiesel fuel standard ASTM D6751 and blended fuel standard ASTM D975 | Fuel should be adopted to biodiesel fuel standard ASTM D6751 and blended fuel standard ASTM D7467 |
| | Fuel expiration date | No particular condition | Use fuel within 6 months from manufacturing date, in addition, use it up within 3 months after fueling. |
| | Usage start date | No particular condition | When switching to the biodiesel fuel, it is required that tank and piping are cleaned and fuel filter elements are changed. |
| | Fuel storage | No particular condition | Clean storage tank thoroughly, and be careful of water and occurrence of microorganisms. |

#DLC: Diamond Like Carbon coating on injector nozzle.

| | Requirement | Up to B5 | Above B5 to below B20 |
|---|---|---|---|
| Engine component | Injector | No particular condition | |
| | Injector cleaner | No particular condition | Periodical cleaning with specified injector cleaner is recommended. (If deposit is found in fuel system, clean injector after removing the deposit.) |
| | Engine oil | No particular condition | Frequently check oil level, and if oil dilution occurs, change oil. Oil change interval is shorter than usual. |
| | Fuel filter | No particular condition | An additional fuel filter is recommended. Change filter at every 10,000 miles (16,000 km) interval. |
| | Sedimenter | No particular condition | Comparing to regular fuel, more water accumulates in sedimenter, so frequently drain the water from sedimenter. If too much water accumulates in sedimenter, MIL (Malfunction indicator light) is turned on. If turned on, clean fuel line and fuel filter. |
| | Fuel heater | No particular condition | In cold climates, attachment of an appropriate fuel heater is recommended. |
| | Caution against fuel | Following materials must not be used in fuel.<br>Natural rubber, Butyl rubber, Nitrile rubber, Copper, Bronze, Brass, Tin, Lead and Zinc | |
| Fuel distribution | Fuel handler | No particular condition | Purchase from fuel handlers licensed under BQ9000. |

**Table 9: Lubrication chart—Hydraulic brake type**

| No. | Item | Lubrication position | Remarks |
|---|---|---|---|
| 1 | Steering shaft slip joint and gear | 2 | |
| 2 | Steering dust boot | 1 | |
| 3 | Power steering fluid reservoir tank | 1 | Fill to fluid level gauge (Upper and lower) |
| 4 | Steering knuckle (king pin) | 4 | |
| 5 | Wheel bearing (Front) | 2 | |
| 6 | Clutch release sleeve (Applicable for manual transmission) | 1 | |
| 7 | Clutch release shaft (Applicable for manual transmission) | 2 | |
| 8 | Transmission gearshift lever | 1 | |
| 9 | Transmission | 1 | Fill to oil level of filler plug |
| 10 | Propeller shaft, U-joint | 3—4 | |
| 11 | Propeller shaft, slip joint | 1 | (Sliding yoke) |
| 12 | Rear axle | 1 | Fill to oil level of filler plug |
| 13 | Engine | 1 | Fill to “FULL” between “ADD” mark of level gauge |
| 14 | Clutch fluid reservoir tank (Applicable for manual transmission) | 1 | Fill to “MAX” mark of reservoir tank |
| 15 | Battery terminal | 4 or 6 | Apply the chassis grease (Each terminal) |
| 16 | Drag link ball joint | 2 | |
| 17 | Tie-rod ball joint | 2 | |

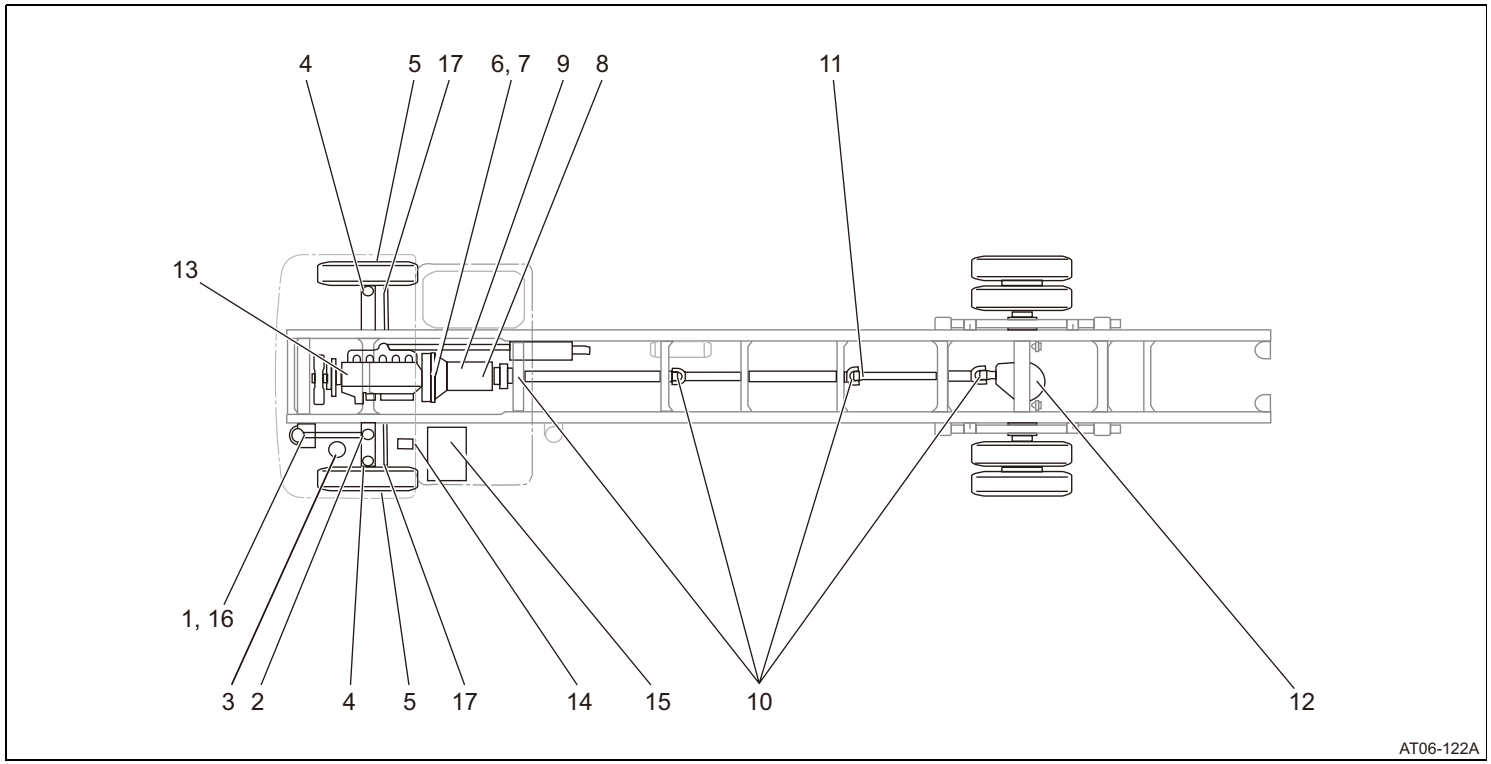
4
5
17
6, 7
9
8
11
13
1, 16
3
2
4
5
17
14
15
10
12
AT06-122A

**—Full air brake type**

| No. | Item | Lubrication position | Remarks |
|---|---|---|---|
| 1 | Steering shaft slip joint and gear | 2 | |
| 2 | Steering dust boots | 1 | |
| 3 | Power steering fluid reservoir tank | 1 | Fill to fluid level gauge (Upper and lower) |
| 4 | Steering knuckle (king pin) | 4 | |
| 5 | Wheel bearing (Front) | 2 | |
| 6 | Clutch release sleeve (Applicable for manual transmission) | 1 | |
| 7 | Clutch release shaft (Applicable for manual transmission) | 2 | |
| 8 | Transmission gearshift lever | 1 | |
| 9 | Transmission | 1 | Fill to oil level of filler plug |
| 10 | Propeller shaft, U-joint | 3—4 | |
| 11 | Propeller shaft, slip joint | 1 | (Sliding yoke) |
| 12 | Rear axle | 1 | Fill to oil level of filler plug |
| 13 | Engine | 1 | Fill to “FULL” between “ADD” mark of level gauge |
| 14 | Clutch fluid reservoir tank (Applicable for manual transmission) | 1 | Fill to “MAX” mark of reservoir tank |
| 15 | Battery terminal | 4 or 8 | Apply the chassis grease (Each terminal) |
| 16 | Drag link ball joint | 2 | |
| 17 | Tie-rod ball joint | 2 | |
| 18 | Brake automatic slack adjuster (Front and Rear) | 4 | Apply the chassis grease (At the same time, the clevis pin hole busing of the automatic slack adjuster, the slide part with the clevis, and the clevis pin hole must be lubricated sufficiently). |
| 19 | Brake camshaft bracket bushing (Rear) | 2 | Apply the chassis grease |

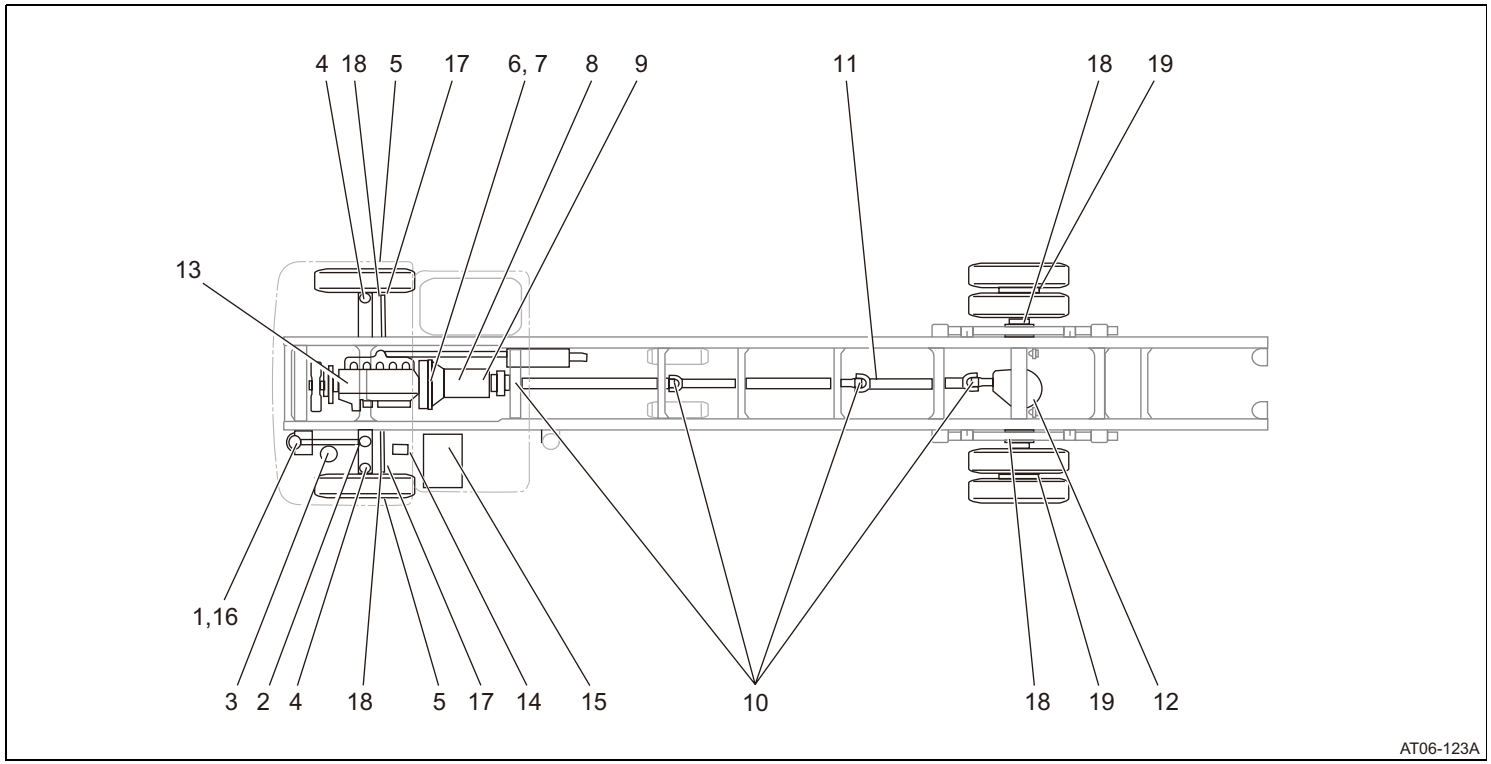
4
18
5
17
6, 7
8
9
11
18
19
13
1,16
3
2
4
18
5
17
14
15
10
18
19
12
AT06-123A

### —Hydraulic brake type with air suspension

| No. | Item | Lubrication position | Remarks |
|---|---|---|---|
| 1 | Steering shaft slip joint and gear | 2 | |
| 2 | Steering dust boots | 1 | |
| 3 | Power steering fluid reservoir tank | 1 | Fill to fluid level gauge (Upper and lower) |
| 4 | Steering knuckle (king pin) | 4 | |
| 5 | Wheel bearing (Front) | 2 | |
| 6 | Clutch release sleeve (Applicable for manual transmission) | 1 | |
| 7 | Clutch release shaft (Applicable for manual transmission) | 2 | |
| 8 | Transmission gearshift lever | 1 | |
| 9 | Transmission | 1 | Fill to oil level of filler plug |
| 10 | Propeller shaft, U-joint | 3—4 | |
| 11 | Propeller shaft, slip joint | 1 | (Sliding yoke) |
| 12 | Rear axle | 1 | Fill to oil level of filler plug |
| 13 | Engine | 1 | Fill to “FULL” between “ADD” mark of level gauge |
| 14 | Clutch fluid reservoir tank (Applicable for manual transmission) | 1 | Fill to “MAX” mark of reservoir tank |
| 15 | Battery terminal | 4 or 6 | Apply the chassis grease (Each terminal) |
| 16 | Drag link ball joint | 2 | |
| 17 | Tie-rod ball joint | 2 | |

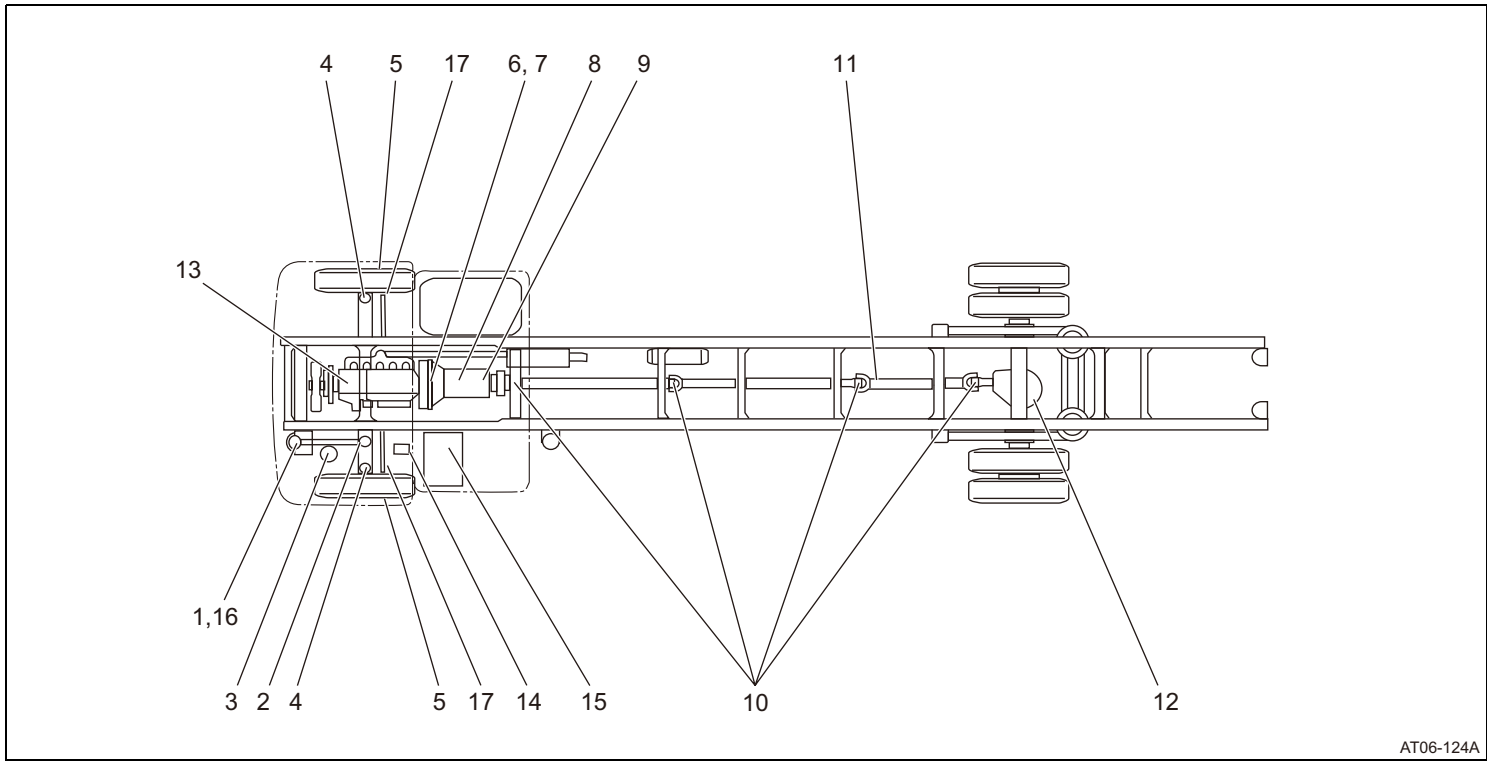
4
5
17
6, 7
8
9
11
13
1,16
3
2
4
5
17
14
15
10
12
AT06-124A

**—Full air brake type with air suspension**

| No. | Item | Lubrication position | Remarks |
|---|---|---|---|
| 1 | Steering shaft slip joint and gear | 2 | |
| 2 | Steering dust boots | 1 | |
| 3 | Power steering fluid reservoir tank | 1 | Fill to fluid level gauge (Upper and lower) |
| 4 | Steering knuckle (king pin) | 4 | |
| 5 | Wheel bearing (Front) | 2 | |
| 6 | Clutch release sleeve (Applicable for manual transmission) | 1 | |
| 7 | Clutch release shaft (Applicable for manual transmission) | 2 | |
| 8 | Transmission gearshift lever | 1 | |
| 9 | Transmission | 1 | Fill to oil level of filler plug |
| 10 | Propeller shaft, U-joint | 3—4 | |
| 11 | Propeller shaft, slip joint | 1 | (Sliding yoke) |
| 12 | Rear axle | 1 | Fill to oil level of filler plug |
| 13 | Engine | 1 | Fill to “FULL” between “ADD” mark of level gauge |
| 14 | Clutch fluid reservoir tank (Applicable for manual transmission) | 1 | Fill to “MAX” mark of reservoir tank |
| 15 | Battery terminal | 4 or 8 | Apply the chassis grease (Each terminal) |
| 16 | Drag link ball joint | 2 | |
| 17 | Tie-rod ball joint | 2 | |
| 18 | Brake automatic slack adjuster (Front and Rear) | 4 | Apply the chassis grease (At the same time, the clevis pin hole busing of the automatic slack adjuster, the slide part with the clevis, and the clevis pin hole must be lubricated sufficiently). |
| 19 | Brake camshaft bracket bushing (Rear) | 2 | Apply the chassis grease |

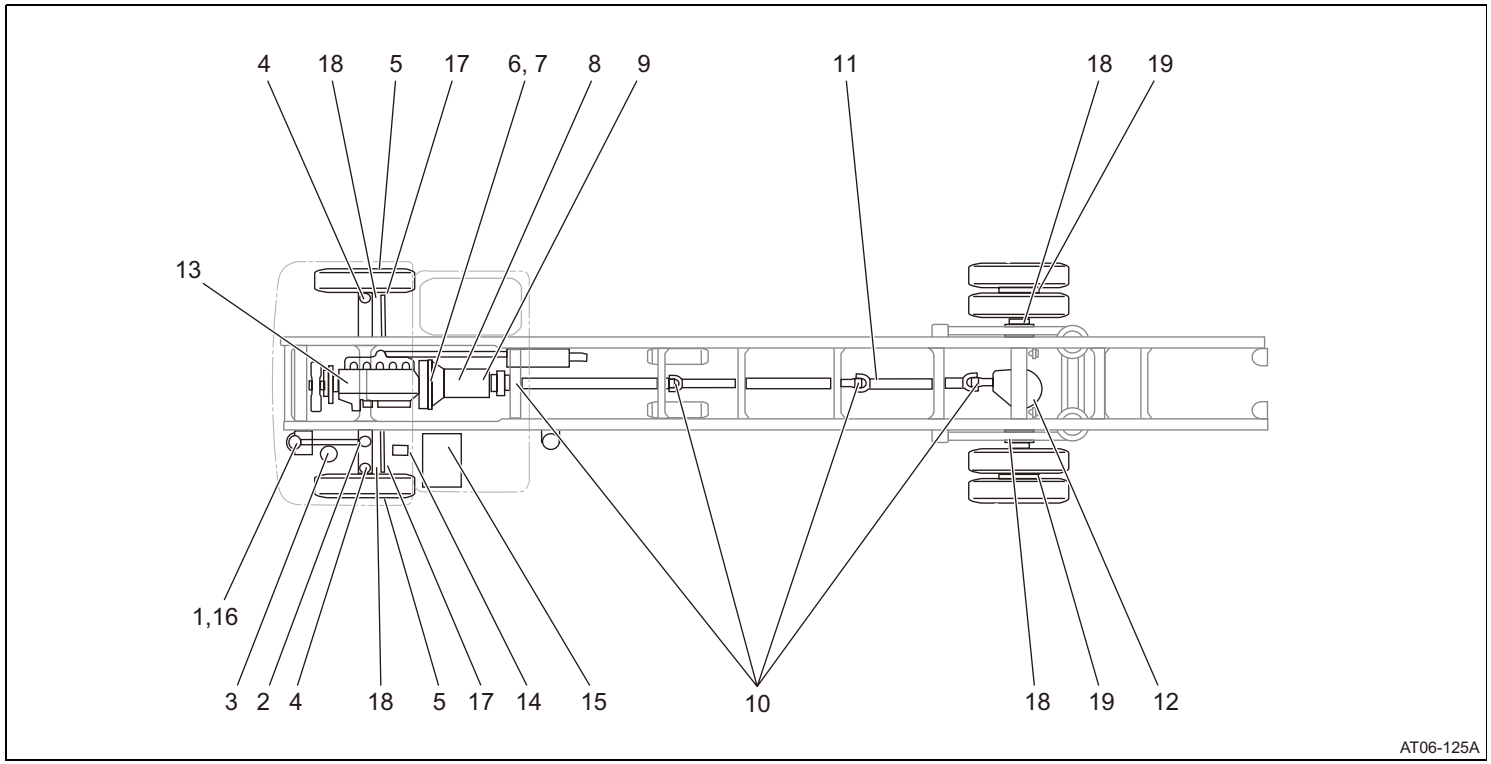
4
18
5
17
6, 7
8
9
11
18
19
13
1,16
3
2
4
18
5
17
14
15
10
18
19
12
AT06-125A

## Table 10: Light bulb replacement

### Light bulb specifications

When replacing a bulb of your vehicle, perform the bulb replacement referring to the following notes and the light bulb specifications. If you have any questions, consult your Hino dealer.

***NOTICE:***

*When replacing a bulb, make sure that the key is in the "**LOCK**" position and the relevant light switch is in the "**OFF**" position. Use only a bulb with the same bulb number and wattage rating of 12 volt.*

| No. | Light bulb description | Bulb No. | Wattage |
|---|---|---|---|
| 1 | Head lights | HB2 | 60/55 |
| 2 | Front turn signal lights/Parking and front side marker lights | 4157NAK | 27/8 |
| 3 | Front side turn signal lights | 168 | 5.0 |
| 4 | Rear turn signal, stop/tail lights and license plate lights (left side only) | 1157 | 27/8 |
| 5 | Back-up lights | 1156 | 27 |
| 6 | Front cab marker lights (LED) | LED | — |
| 7 | Cab (room) light | — | 8.0 |
| 8 | Heater control illumination light | 74 | 1.4 |
| 9 | Instrument cluster warning and indicator lights | LED | — |
| 10 | Speedometer illumination lights | 194 | 3.8 |
| 11 | Tachometer illumination light | 57 | 3.4 |
| 12 | Air pressure illumination light | 57 | 3.4 |

H1-A038E01.book　122 ページ　２０１６年１０月１９日　水曜日　午後５時２６分

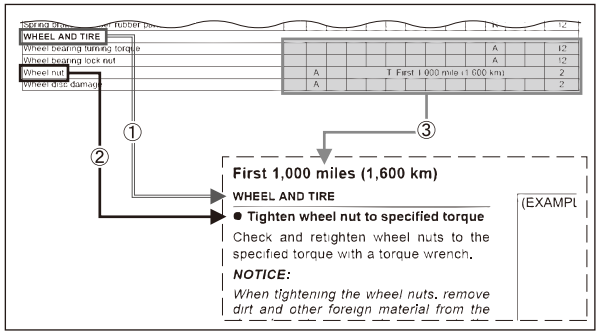


① Names of equipment or system, etc.
② Maintenance item
③ Service intervals

# MAINTENANCE

## Periodic maintenance procedures

The maintenance items mentioned in this section are relatively simple and easy.

If you have any question about maintenance service, contact your Hino dealer.

See “Table 1: Recommended maintenance service” on page 6-43 for maintenance items and intervals.

The numbers in parenthesis following the titles correspond to the numbers of each maintenance item in “Table 1: Recommended maintenance service” on page 6-43.

***NOTICE:***

- *Other maintenance operations see “Table 1: Recommended maintenance service” on page 6-43.*
- *The items with ** mark should be performed by your Hino dealer.*
- *Be sure to contact your Hino dealer and follow the dealer's instructions regarding the use of biodiesel fuel before you use the biodiesel fuel with your vehicle.*

Read the entire manual before using the vehicle. Failure to follow instructions, warnings and safety precautions could result in death, serious injury and/or damage to the vehicle.

H1-A038E01.book 124 ページ ２０１６年１０月１９日 水曜日 午後５時２６分

**SERVICE INTERVALS:**
Odometer reading or months, whichever comes first.

**ODOMETER READING**

**First** 600 miles (1,000 km) ..... 6-125
**First** 1,000 miles (1,600 km) ..... 6-125
**First** 3,000 miles (5,000 km) ..... 6-125
Every 3,000 miles (5,000 km) ..... 6-126
**First** 3,000 - 5,000 miles (5,000 - 8,000 km) ..... 6-127
**First** 6,000 miles (10,000 km) ..... 6-128
Every 6,000 miles (10,000 km) ..... 6-128
Every 9,000 miles (15,000 km) ..... 6-132
Every 10,000 miles (16,000 km) ..... 6-134
Every 12,000 miles (20,000 km) ..... 6-139
Every 18,000 miles (30,000 km) ..... 6-140
Every 20,000 miles (32,000 km) ..... 6-142
Every 24,000 miles (40,000 km) ..... 6-146
Every 25,000 miles (40,000 km) ..... 6-146
Every 30,000 miles (50,000 km) ..... 6-147
Every 36,000 miles (60,000 km) ..... 6-147
Every 50,000 miles (80,000 km) ..... 6-152
Every 60,000 miles (100,000 km) ..... 6-154
Every 72,000 miles (120,000 km) ..... 6-154
Every 75,000 miles (120,000 km) ..... 6-156
Every 100,000 miles (160,000 km) ..... 6-156
Every 120,000 miles (200,000 km) ..... 6-157
Every 150,000 miles (240,000 km) ..... 6-157
Every 240,000 miles (400,000 km) ..... 6-159
Every 250,000 miles (400,000 km) ..... 6-161
Every 300,000 miles (480,000 km) ..... 6-161
Every 360,000 miles (600,000 km) ..... 6-161
Every 500,000 miles (800,000 km) ..... 6-161

**MONTHS (Hour & week)**

**First** 30 hours ..... 6-161
Every 40 hours ..... 6-161
Every 500 hours ..... 6-162
Every 900 hours ..... 6-162
Every 1,000 hours ..... 6-162
Every 2,000 hours ..... 6-162
Every 1 month ..... 6-162
Every 2 months ..... 6-163
Every 3 months ..... 6-164
Every 4 months ..... 6-165
Every 6 months ..... 6-165
Every 12 months ..... 6-167
Every 24 months ..... 6-172
Every 36 months ..... 6-173
Every 48 months ..... 6-173
Every 60 months ..... 6-174
Every 84 months ..... 6-174

## First 600 miles (1,000 km)

**AIR SUSPENSION**

- **Retighten the suspension U-bolt and spring band to the specified torque****

## First 1,000 miles (1,600 km)

**WHEEL AND TIRE**

- **Tighten wheel nut to specified torque**

Check and retighten wheel nuts with the designated torque with a torque wrench.

See pages 6-86, and 6-88.

**FRONT AXLE**

- **“Wheel-end Oil change” interval, Check the oil level**
  - For detail, see “Front axle” on page 6-74.

## First 3,000 miles (5,000 km)

**LUBRICATING SYSTEM**

- **Change the Hino genuine motor oil TYPE 1 & 2**
- **Change the non-genuine motor oil TYPE 1 & 2**
  - Type of operation details, see page 6-63.

**STEERING**

- **Inspect and clean the power steering reservoir tank strainer****
- **Inspect the power steering reservoir tank filter and fluid level, replace the power steering reservoir tank filter and add the fluid if necessary****

**SUSPENSION**

- **Check the tightness of U-bolts and clip bands****

## Every 3,000 miles (5,000 km)

### AIR SUSPENSION

- **Check the looseness, excessive play, or damage of mounting or joint of the suspension (Air spring, shock absorber)**

or Every 3 months

### AIR FLOW, HEATING AND AIR CONDITIONER

- **Clean the air filter (for cab ventilator)**

or Every 1 month

**⚠ CAUTION**

**To maintain proper functioning of the ventilator, heater and defroster, clean the outside intake filter and the inside air intake filter in accordance with the following procedures.**

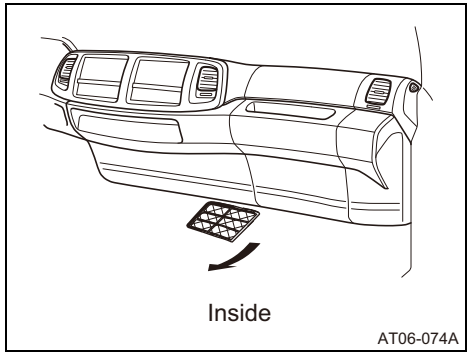

Inside

AT06-074A

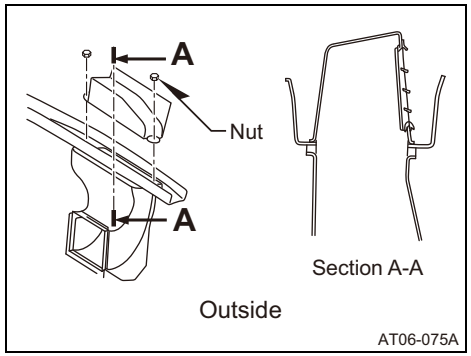


AT06-075A

### HOW TO CLEAN THE AIR INTAKE FILTER

**⚠ CAUTION**

**If you wash the filter with water, be sure to place the air intake selector on the “Recirculate” position to prevent the water entering the air conditioning system, and wipe the filters thoroughly with clean cloths.**

1. Remove the outside air intake filter and then remove the inside air intake filter.
2. Clean the outside air intake filter and the inside air intake filter with water or compressed air.

## First 3,000—5,000 miles (5,000—8,000 km)

**MANUAL TRANSMISSION (MINERAL OILS) (Eaton® FS-5406A and FS-6406A)**

- **Highway use: Change the transmission gear oil**
  - See “Transmission lubrication” on page 6-68.

**REPLACEMENT PROCEDURE**

**⚠ CAUTION**

**To avoid serious burns or injuries on your hands and other parts of your body, be sure to wait until the transmission is fully cooled down.**

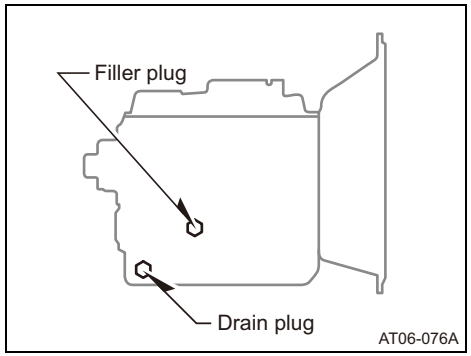


1. Park the vehicle on safe and level ground.
2. Prepare a suitable container to receive the used oil.
3. Clean around the filler and drain plugs.
4. Remove the filler plug with a gasket.
5. Remove the drain plug with a gasket and drain the used gear oil into the container.
6. Clean the drain plug with a magnet and tighten the plug with a new gasket.

**Tightening torque:** N·m (lbf·ft., kgf·cm)
62—74 (45—55, 635—755)

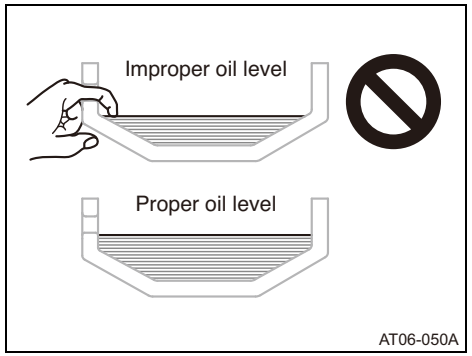


7. Add gear oil up to the lower end of the filler plug hole.

**Gear oil:**
To determine the proper gear oil to use in your vehicle, see “Table 7: Recommended lubrication” on page 6-105

8. Clean the filler plug with a magnet and tighten it with a new gasket.

**Tightening torque:** N·m (lbf·ft., kgf·cm)
34—46 (25—34, 350—470)

## First 6,000 miles (10,000 km)

**COOLING SYSTEM**

- **Inspect (initial inspection) the drive belts, adjust if necessary****

## Every 6,000 miles (10,000 km)

**LUBRICATING SYSTEM**

- **Change the non-genuine motor oil TYPE 1**

or Every 2 months

- Type of operation details, see page 6-63.

**PROPELLER SHAFT**

- **Lubricate the propeller shaft spline play**

or Every 1 month

- **Lubricate the propeller shaft universal joints**

or Every 1 month

**AUTOMATIC TRANSMISSION, TES 389 - approved fluid and TES 295 - approved fluid (Allison® 2200HS, 2200RDS, 2500HS, 2500RDS, 3000RDS and 3500RDS)**

- **Check the automatic transmission fluid level, fluid leakage and case damage**

or Every 1 month

- For check and replacement procedure, see page 6-135.

**FRONT AXLE**

- **“Front non-drive axle greasing” (Ball studs on steering arm, tie-rod ends, and drag link)**
  - For detail, see “Front axle” on page 6-74.

or Every 12 months

**STEERING**

- **Lubricate the tie rod and drag link ball joint****

or Every 12 months

**SERVICE BRAKE FOR HYDRAULIC TYPE**

- **Check the fluid leakage, damage and tightness****

or Every 2 months

- **Check the brake pipe and hose damage****

or Every 2 months

**SERVICE BRAKE FOR FULL AIR TYPE**

- **Check the air leakage, damage and tightness****

or Every 2 months

- **Lubricate the automatic slack adjuster (front and rear)****

or Every 2 months

At the same time, lubricate thoroughly the clevis pin hole bushing of the automatic slack adjuster, the push rod of the automatic slack adjuster and the clevis pin hole.

**Grease:**
To determine the proper grease to use, see “Table 7: Recommended lubrication” on page 6-105.

- **Inspect the brake spider damage and deformation**

or Every 12 months

- **Lubricate the brake spider bushing (front and rear) and brake camshaft bracket bushing (rear)**

or Every 2 months

**Grease:**
To determine the proper grease to use, see “Table 7: Recommended lubrication” on page 6-105.

- **Check the brake pipe and hose damage****

or Every 2 months

**PARKING BRAKE FOR WHEEL PARKING TYPE**

- **Check the leakage, damage and tightness****

or Every 2 months

**WHEEL AND TIRE**

- **Check the wheel nut tightness**

or Every 2 months

  - For procedure, see the page 6-125.

- **Check the wheel disc damage**

or Every 2 months

  - Visually check wheels for damage, cracks or bends. See page 6-86.

- **Check the leaf spring damage and deformation**

or Every 2 months

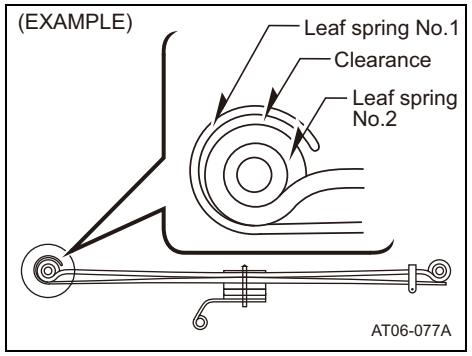


**⚠ WARNING**

**If any single leaf spring is damages, have the whole leaf spring assembly replaced by your Hino dealer. Otherwise, you may lose control of your vehicle due to the damaged spring assembly, resulting in death or serious injury in an accident.**

**Check for leaf spring damage and deformation**

1. Visually check the leaf spring for clearance between leaf spring No.1 and leaf spring No.2. If there is no clearance, contact your Hino dealer for the further inspection since the leaf spring No.2 may be broken.
2. Visually check each component of each of the leaf spring assemblies, including the brackets, U-bolts, and surrounding parts for any damage or cracks. If there is damages or cracks, contact your Hino dealer to have them replaced.
3. Check to determine if the springs are sagging, without load. If they are sagging, consult your Hino dealer to have the situation corrected.

● **Check the tightness of spring pin fitting nut and lock nut, retighten if necessary**

or Every 2 months

**Tightening torque:** N·m (lbf·ft, kgf·cm)

**Front spring:**

375—425 (278—315, 3,840—4,350)

**Rear spring:**

203—277 (151—206, 2,070—2,830)

**Air spring, rear:**

500—600 (370—440, 5,100—6,110)

**Air spring, rear (double leaf):**

745—811 (550—595, 7,600—8,260)

The points to be checked and retightened are shown with arrows in the following illustration.

(EXAMPLE)

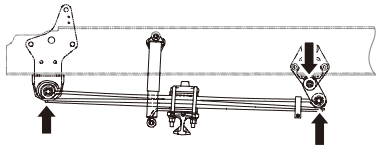

Front spring

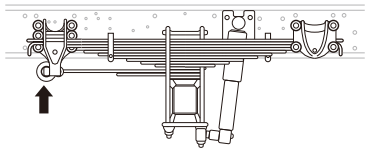

Rear spring

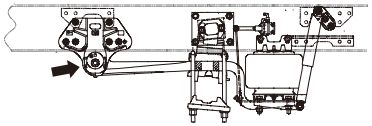

Air spring, rear

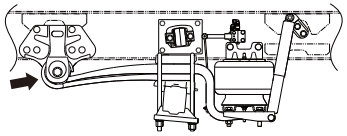

Air spring, rear (severe duty)

AT06-126A

● **Check the shock absorber mounting, retighten if necessary**

or Every 2 months

**Tightening torque:** N·m (lbf·ft, kgf·cm)

**Front spring:**

170—225 (125—167, 1,725—2,315)

**Rear spring:**

180—240 (133—177, 1,840—2,450)

**Air spring, rear:**

**—A:**

69—95 (51—70, 704—965)

**—B:**

215—245 (159—180, 2,200—2,500)

The areas of the shock absorber mountings to be inspected and retightened are shown with arrows in the following illustration.

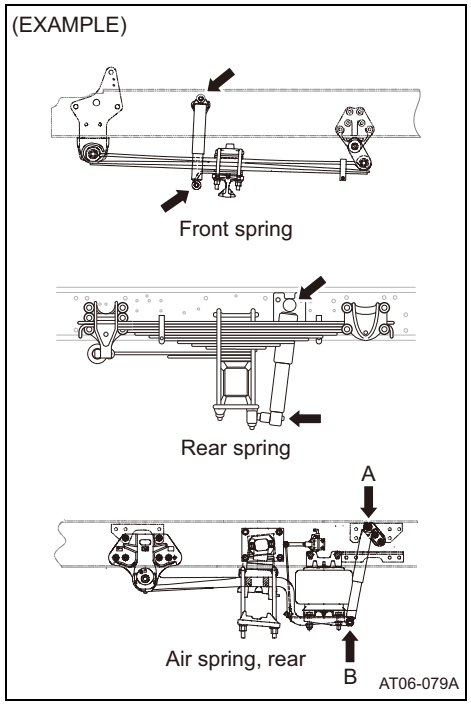


- **Lubricate the spring pin and shackle pin (front and rear)**

or Every 2 months

- **Lubricate the spring slide seat**

or Every 2 months

## Every 9,000 miles (15,000 km)

### CLUTCH FOR MANUAL ADJUST TYPE

- **Lubricate the clutch release sleeve and shaft**

or Every 1 month

Lubricate the clutch release sleeve and shaft at the portions indicated by the arrows.

- Do not apply grease excessively. Otherwise, the flow of old grease may come out from the clearance between the housing and the shaft or from the face that contacts the release fork.
- Wipe off excess grease, if any, when removing the cover from the housing.

**Grease:**
To determine the proper grease to use, see “Table 7: Recommended lubrication” on page 6-105.

**Areas of the Vehicle that Require Greasing:**
See “Table 9: Lubrication chart” on page 6-113.

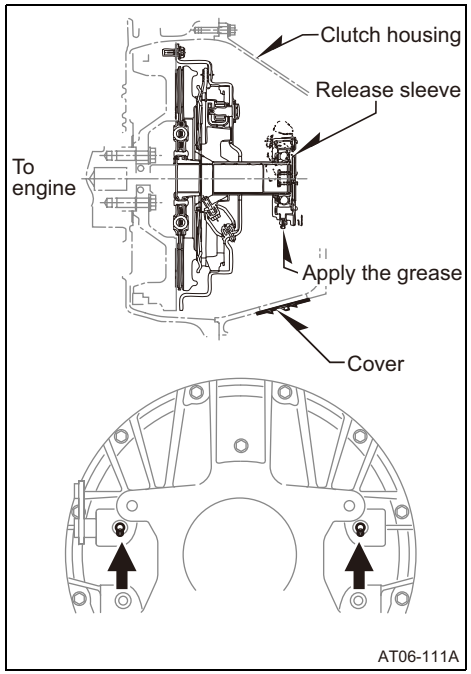


- **Check the clutch facing wear** **(Not available with automatic transmission)**

or Every 2 months

**CLUTCH FOR AUTOMATIC ADJUST TYPE (Solo® Clutch)**

- **Lubricate the clutch release sleeve and shaft**

or Every 1 month

**Grease:**
To determine the proper grease to use, see “Table 7: Recommended lubrication” on page 6-105.

**Areas that Require Greasing:**
See “Table 9: Lubrication chart” on page 6-113.

- **Check the clutch facing wear (Check the wear indicator)****

or Every 2 months

**AIR SUSPENSION**

- **Inspect the torque rod rubber bushing crack**

or Every 12 months

- **Check the radius rod rubber bushing crack and looseness**
- **Check the suspension arm crack and looseness**

## Every 10,000 miles (16,000 km)

**LUBRICATING SYSTEM**

- **Change the non-genuine motor oil TYPE 2**

or Every 2 months

- Type of operation details, see page 6-63.

**AIR INTAKE AND EXHAUST SYSTEM**

- **Clean the intercooler body****

or Every 6 months

The intercooler is used to cool the intake air charged by the turbocharger, and is installed at the front of the radiator. Be sure to have the intercooler body cleaned and inspected by your Hino dealer at least at the intervals set forth at page 6-43.

**⚠ CAUTION**

- **To maintain proper functioning of the intercooler, be sure to have the intercooler cleaned by your Hino dealer at least at intervals set forth at page 6-43.**
- **Never try to clean the inside of the intercooler body with water to prevent an engine failure.**

**MANUAL TRANSMISSION (MINERAL OILS) AND (SYNTHETIC OILS) (Eaton® FS-5406A and FS-6406A)**

- **Highway use: Check the transmission gear oil level, add if necessary, and check for leaks**

- See “Transmission lubrication” on page 6-68.

**⚠ CAUTION**

**To avoid serious burns or injuries on your hands and other parts of your body, be sure to wait until the transmission has fully cooled down before inspecting and adding gear oil.**

1. Park the vehicle on safe and level ground.
2. Wait until the transmission has fully cooled down.
3. Remove the filler plug and check to determine if the transmission oil is properly filled by following the procedures described at page 6-68.
4. If transmission oil needs to be added, pour the transmission oil through the filler plug hole until the proper level has been reached.
5. Tighten the filler plug.

**Tightening torque:** N·m (lbf·ft, kgf·cm)

**Filler plug:**

34—46 (25—35, 350—470)

**Transmission gear oil:**

See “Table 7: Recommended lubrication” on page 6-105.

**AUTOMATIC TRANSMISSION, TES 389 - approved fluid and TES 295 - approved fluid (Allison® 2200HS, 2200RDS, 2500HS, 2500RDS, 3000RDS and 3500RDS)**

- **Check the fluid level, add if necessary, and check for leaks**

To determine the proper automatic transmission fluid to use, see “Table 7: Recommended lubrication” on page 6-105.

**⚠ CAUTION**

- **To avoid serious injuries or burns, wait until the transmission is fully cooled down before working on it.**
- **Never allow dirt or foreign materials to enter the fluid system of the transmission. Contamination of the fluid can lead to clogging and premature wear of the transmission.**
- **Always conduct the pre-inspection of the fluid level (Cold Check) before the inspection of the fluid level (Hot Check) so that the Hot Check can be performed safely.**
- **Always check the fluid level gauge at least twice in order to accurately determine the fluid level. If the reading is inconsistent between the first and second checks, check the transmission breather and the vent hole using a fluid level gauge in the fill tube. If there is any dirt or foreign materials on the vent hole and breather, remove them.**
- **Check the fluid level in accordance with procedures set forth below and record any abnormal level of the transmission fluid on your maintenance records.**

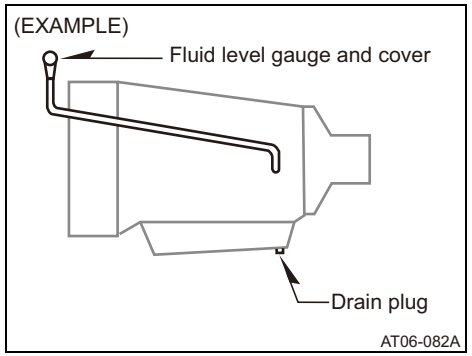


**Check the fluid level.**

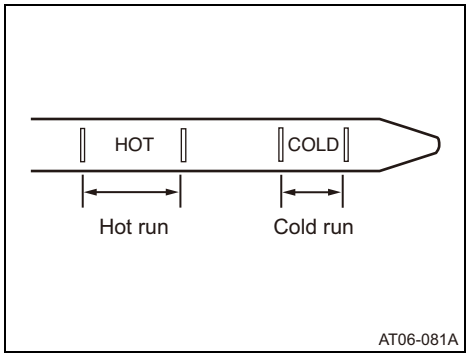


**Cold Check (Pre-inspection of the transmission fluid level)**

**Be sure to conduct the COLD CHECK before the HOT CHECK.**

1. Park the vehicle on a level and safe place with the gearshift lever in neutral position (for manual transmission) or place the selector lever in "**P**" position (automatic transmission with "**P**" position) or "**N**" position (automatic transmission without "**P**" position) and apply the parking brake firmly.
2. Run the engine for at least one minute until the sump temperature reaches 16—49°C (60—120°F). Place the selector lever in the "**1**" (First) position and then shift the lever to the "**R**" (Reverse) position to clear the hydraulic circuits of air. Then shift the selector lever to the "**N**" (neutral) position.
3. Remove the fluid level gauge, wipe the fluid level gauge clean and check the fluid level. If the fluid on the fluid level gauge is within the "**COLD RUN**" band, you can proceed to perform the inspection of the "**HOT CHECK**." If the fluid level does not reach the "**COLD RUN**" band, add fluid until it reaches the "**COLD RUN**" band.

**Hot check**

4. After the "**COLD CHECK**" is completed, shift the selector lever from "**N**" (neutral) position to "**D**" (drive position) and run the engine for at least 10 minutes until the sump temperature reaches 71—93°C (160—200°F).
5. Remove the fluid level gauge, wipe the fluid level gauge clean and check the fluid level. If the fluid level is not within the "**HOT RUN**" band, add or drain the fluid, as appropriate, until it reaches the "**HOT RUN**" band.

**Replacement of the automatic transmission fluid filter procedure**

Have the automatic transmission fluid filter replaced by your Hino dealer.

**AIR SUSPENSION**

- **Check the transverse rod rubber bushing crack and looseness, adjust if necessary**

**NOISE EMISSION CONTROL MAINTENANCE SCHEDULE**

- **Inspect the muffler with catalyst (exhaust gas after treatment system) and exhaust pipe clamps, retighten if necessary**

or Every 6 months

Have the joint connections and the clamps of the exhaust gas after treatment system checked by your Hino dealer for any looseness or leakage of the exhaust gas and have them tightened or repaired by your Hino dealer, if necessary. Make a visual inspection for cracks or holes in the cleaner and tail pipe. Always be sure to use Hino recommended replacement parts.

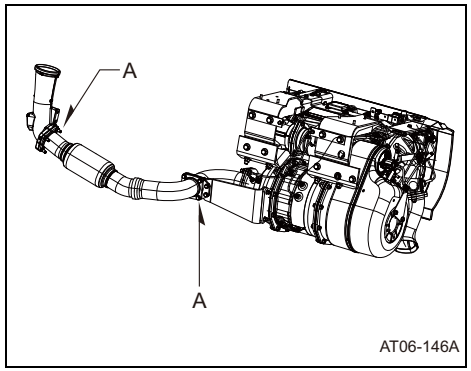


**Tightening torque:** N·m (lbf·ft, kgf·cm)
**—A:**
56—84 (42—61, 572—856)
**8 mm dia.:**
18—26 (14—19, 184—265)
**10 mm dia.:**
41—61 (31—44, 419—622)
**12 mm dia.:**
69—103 (51—76, 704—1051)
**14 mm dia.:**
80—120 (59—88, 816—1224)

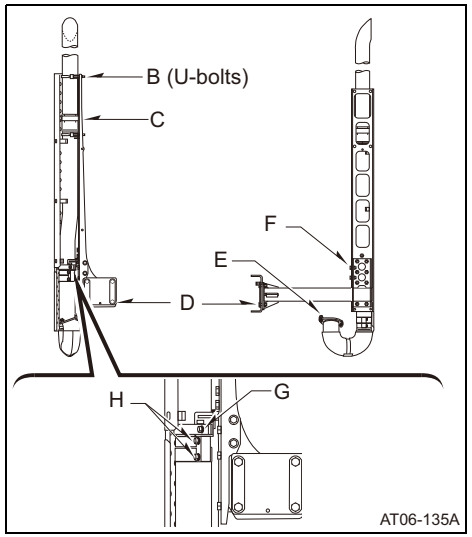


**Tightening torque:** N·m (lbf·ft, kgf·cm)
**—B (U-bolts):**
36—44 (27—32, 368—448)
**—C:**
36.9—49.9 (28—36, 377—508)
**—D:**
104—126 (77—92, 1,061—1,284)
**—E:**
108—132 (80—97, 1,102—1,346)
**—F:**
130—158 (96—116, 1,326—1,611)
**—G:**
20.4—30.4 (16—22, 209—310)
**—H:**
60—80 (44—59, 612—816)

**DEF-SCR SYSTEM (EXHAUST GAS AFTER TREATMENT SYSTEM)**

- **Check the exhaust gas leakage from around the sensor****

Have the sensors of the exhaust gas after treatment system checked by your Hino dealer for any leakages of exhaust gas or damaged wires. If you find any leakages of exhaust gas or damage, such as cracks on the surface of the sensor hose, contact your Hino dealer to have them inspected.

See “Table 1: Recommended maintenance service” on page 6-43.

H1-A038E01.book 139 ページ ２０１６年１０月１９日 水曜日 午後５時２６分

## Every 12,000 miles (20,000 km)

### FUEL SYSTEM

- **Check the fuel hoses (Fuel filter (chassis mount) to supply pump, Fuel tank to fuel filter (chassis mount), Engine to fuel tank)****
  - Check the fuel hoses for any damages. If any damage is noticed, have the damaged items replaced by your Hino dealer.
  - When installing fuel hoses, be careful that they do not come in contact with other vehicle parts.
  - After the replacement of fuel hoses by your Hino dealer, always bleed the fuel system in accordance with the procedures on page 6-60. Also check for any fuel leakage.

### LUBRICATING SYSTEM

- **Change the Hino genuine motor oil TYPE 1**

  or Every 6 months

  - Type of operation details, see page 6-63.

### AIR INTAKE AND EXHAUST SYSTEM

- **Check the intake air hoses and clamps**

  or Every 24 months

Check if hose clamps and/or hoses of the air intake system are loosened and/or damaged and have them tightened or replaced by your Hino dealer.

### STEERING

- **Lubricate the steering shaft spline and dust boot****

  or Every 12 months

**Grease:**
To determine the proper grease to use, See “Table 7: Recommended lubrication” on page 6-105.

**Areas that Require Greasing:**
See “Table 9: Lubrication chart” on page 6-113.

### SERVICE BRAKE FOR FULL AIR TYPE

- **Check the lining wear (thickness), replace if necessary****

  or Every 4 months

### PARKING BRAKE FOR CENTER PARKING TYPE

- **Check the control cable slack and damage****

  or Every 4 months

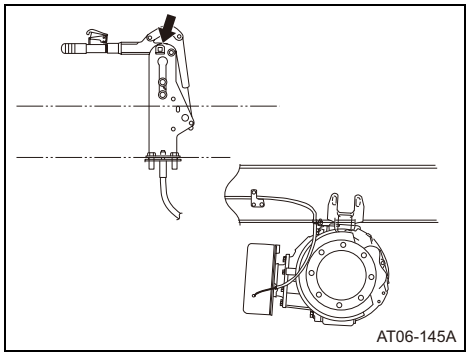


Have your Hino dealer check for if there is any damage to the brake control cable slack and whether the cable connections to the linkage are tight. Have your Hino dealer replace or tighten the cable, if necessary, and lubricate the parking brake lock.

● **Check the drum mounting bolts**

or Every 4 months

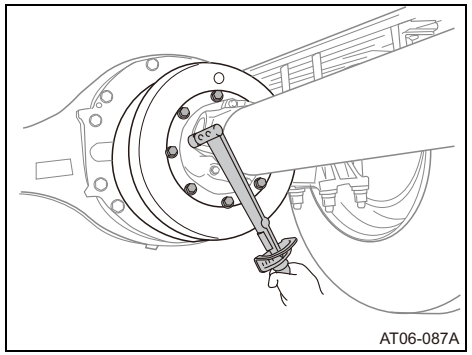


Have your Hino dealer check the tightness of the parking brake drum mounting bolts. and tighten them if they are loosened.

**Tightening torque:** N·m (lbf·ft, kgf·cm)
55—75 (41—55, 561—765)

**ELECTRICAL EQUIPMENT**

● **Check the battery charging**

or Every 4 months

● See and follow the procedures set forth at page 6-78.

**NOISE EMISSION CONTROL MAINTENANCE SCHEDULE**

● **Check the air intake system hoses and clamps**

or Every 4 months

● For procedure, see “Check the intake air hoses and clamps” on page 6-139.

## Every 18,000 miles (30,000 km)

**PROPELLER SHAFT**

● **Retighten the propeller shaft mounting bolts to the specified torque**

or Every 12 months

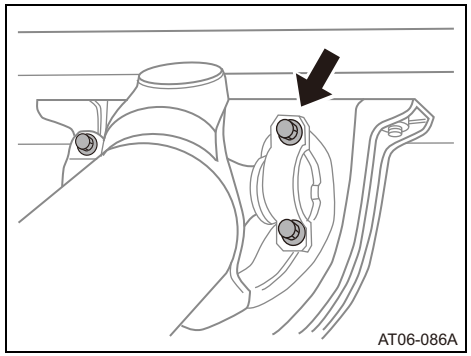


● See “Table 3: Tightening torque” on page 6-94.

**⚠ WARNING**

**Never allow grease and/or oil to adhere to stamped straps, stamped strap bolts and bolt holes.**

**The grease and/or oil which adhere to the stamped strap bolts, stamped straps, or used inferior grade bolts can cause separation of the driveline from the vehicle, which could result in death or serious injuries in an accident.**

**REAR AXLE**

- **Inspect and clean the axle housing breather**

or Every 6 months

- **Retighten axle shaft mounting bolts**

or Every 12 months

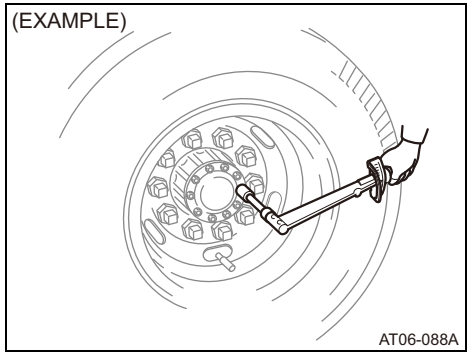


Check to determine whether the axle shaft mounting bolts and nuts are loose and if they are loose, have them tightened by your Hino dealer.

**FRONT AXLE**

- **“Front non-drive axle greasing” (King pin and bushings, thrust bearings)**

or Every 12 months

**STEERING**

- **Lubricate kingpin, bush and thrust bearing****

or Every 12 months

**Grease:**
To determine the proper grease to use, see “Table 7: Recommended lubrication” on page 6-105.

**Areas that Require Greasing:**
See “Table 9: Lubrication chart” on page 6-113.

**SUSPENSION**

- **Check the tightness of spring bracket**

or Every 6 months

**AIR SUSPENSION**

- **Retighten the tightness of U-bolt and spring band**

**ELECTRICAL EQUIPMENT**

- **Clean the battery terminal**

or Every 6 months

**Grease:**

To determine the proper grease to use, see “Table 7: Recommended lubrication” on page 6-105.

1. Disconnect the battery cables from the battery terminals. Clean the terminals and the cable clamps with warm water **about 140°F (60°C)**.
2. Reinstall the battery cables securely after drying them.
3. Apply chassis grease to the battery terminals and clamps.
4. Install the cover of the battery securely.

**CAB**

- **Check the rear cab support bolts**

or Every 6 months

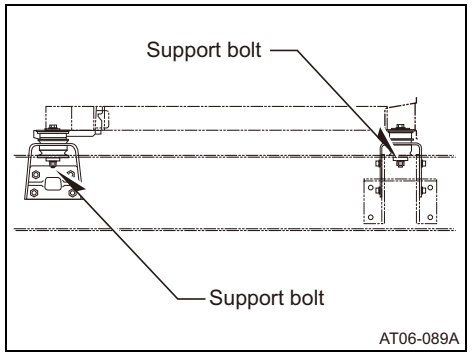


**Tightening torque:** N·m (lbf·ft, kgf·cm)
213—227 (160—166, 2,200—2,300)

- **Check the rear cab mounting brackets, cushion rubber mounting bolt and nut.**

or Every 6 months

## Every 20,000 miles (32,000 km)

**FUEL SYSTEM**

- **Replace the fuel filter (Chassis mount)**

or Every 6 months

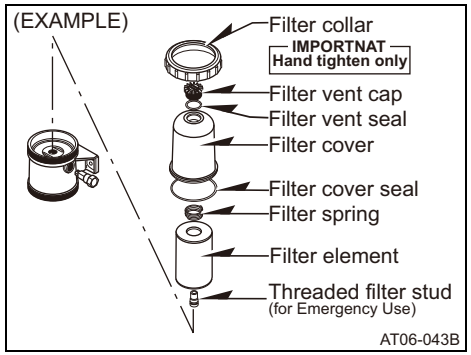

**⚠ WARNING**

**Never allow dirt or water get into the fuel filter element when replacing the fuel filter. Dirt or water may cause an engine fire which can result in serious personal injury or death. Dirt or water could also damage the engine.**

To maximize the performance of your engine, “Hino Genuine Parts” is recommended. Contact your Hino dealer for further details about “Hino Genuine Parts”.

**⚠ WARNING**

**Never expose the fuel filter to brake fluid and organic solvents (such as parts cleaner and paint thinner) to prevent the filter cover from cracking resulting in a fire.**

1. Drain the fuel level to below the filter collar in accordance with the instructions set forth at page 6-145.
2. Close the drain valve at the base of the fuel filter.

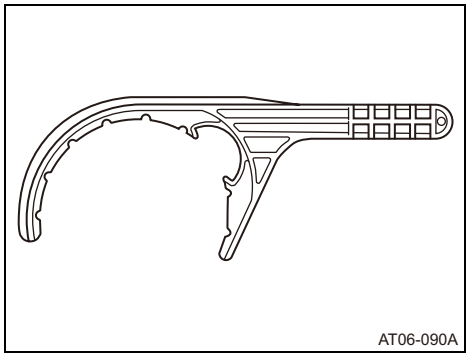


**Filter collar and filter vent cap wrench**

**⚠ WARNING**

**Use the designated special tool and fuel filter wrench (Illustrated above) to remove the fuel filter. Use of an ordinary tool (for example, a chain-type tool) can scratch or dent the peripheral surface of the fuel filter. If the fuel filter is damaged, it can cause fuel to leak, thus resulting in a fire or an accident and can result in serious personal injury or death.**

3. Remove the filter cover and filter collar from the fuel filter by using the wrench (part number: S0955-31040) and remove the O-ring from the base of the filter cover.
4. Remove the filter element from the fuel filter by pulling upward and twisting slightly.
5. Remove the sealing grommet from the center stud at the base of the fuel filter.

**⚠ WARNING**

**Before installation of the fuel filter element, clean the seating surface of the fuel filter element and filter cover. Dirt on the seating surface of the fuel filter element and filter cover may cause an engine fire which can result in serious personal injury or death. Dirt could also damage the engine.**

6. Install the new filter sealing grommet (supplied with the new fuel filter) on the base of the fuel filter and install the new filter element on the processor center stud (supplied with the new fuel filter).
7. Install the new O-ring on the base of the filter cover properly and install the filter cover and the filter collar. Tighten the filter collar by hand until it is seated. **Never use tools to tighten the collar.**
8. Remove the filter vent cap from the top of the clear cover by turning the filter vent cap counterclockwise. Fill the clear cover to the top with clean fuel.
9. Install the new O-ring on the filter vent cap. Reinstall the filter vent cap, and tighten it by hand only. Do not use a tool.
10. Start the engine and keep the engine running for at least 2 minutes until the lubrication system reaches its normal operating pressure. This procedure will allow the removal of the air from the fuel filter element.
11. With the engine running after the air is removed, loosen the filter vent cap.
12. Tighten the filter vent cap until the filter vent cap will not be tightened further with click sounds.

**Fuel level:** 0.5—1.5 inches above the top of the filter collar.

***NOTICE:***

*Replace the Filter element when the fuel level rises to the top of the filter element.*

13. Thoroughly wipe off any spilled fuel, start the engine and check the fuel system for any leakage of fuel.

● **Drain water—follow the procedure below.**

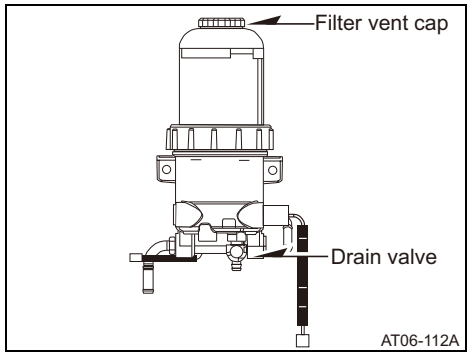


1. Connect the elastic tube, the Part No of which is SZ950-61502, to the drain outlet to protect the steering joint by draining liquids. Such an elastic tube is available at your Hino dealer.
2. Open the drain valve and loosen the filter vent cap.
3. Drain the water into a suitable container.
4. Drain all of the water, then close the drain valve and filter vent cap. (Drain as little of the fuel as is possible.)

**LUBRICATING SYSTEM**

● **Change the Hino genuine motor oil TYPE 2**

or Every 6 months

● Type of operation details, see page 6-63.

**CLUTCH FOR MANUAL ADJUST TYPE**

● **Check the clutch fluid leakage and damage**

or Every 6 months

Visually check the clutch line, hoses and connections for any fluid leakage, damage, rust or rubbing. If any fluid leakage, damage, rust or rubbing are found, have the items replaced by your Hino dealer.

## Every 24,000 miles (40,000 km)

**SERVICE BRAKE FOR FULL AIR TYPE**

- **Check the brake chamber rod stroke****

or Every 3 months

- **Check the automatic slack adjuster (front and rear)****

or Every 3 months

  - Check the automatic slack adjuster for any damage and if damaged, have the slack adjuster replaced by your Hino dealer.

**⚠ WARNING**

- **Never try to adjust the automatic slack adjusters by yourself when you find the pushrod stroke of the service brake excessive. Excessive push stroke may indicate a problem with the automatic adjuster which cannot be corrected manually. In such a situation, immediately contact your Hino dealer.**
- **If you notice any abnormalities in the automatic slack adjuster, have it inspected and repaired by your Hino dealer.**

**Check procedure**

Be sure to have the brake chamber rod stroke on the front and the rear axles checked by your Hino dealer.

in. (mm)

| Brake chamber rod stroke | Standard dimensions |
|---|---|
| On front axle | 1.75 (44.5) |
| On rear axle | 2 (50.8) |

- **Inspect the brake valve, relay valve, spring brake control valve, protection valve function****

or Every 3 months

## Every 25,000 miles (40,000 km)

**AUTOMATIC TRANSMISSION, TES 389 - approved fluid (Allison® 3000RDS and 3500RDS)**

- **Change the automatic transmission fluid****

or Every 12 months

- **Replace the main filter and lube filter****

or Every 12 months

  - For check and replacement procedure, see page 6-135.

**SERVICE BRAKE FOR FULL AIR TYPE**

- **Check the air dryer (Reservoir drain)****

or Every 900 hours

or Every 3 months

## Every 30,000 miles (50,000 km)

### REAR AXLE

- **On-highway use: Change the differential gear oil**

  (On/Off Highway and Off-highway: Every 6 months)

  - For replacement procedure, see page 6-75.

### FRONT AXLE

- **Inspect the wheel bearing end play****

  or Every 12 months

- **Inspect the wheel alignment and turning angle****

  or Every 12 months

- **Inspect the wheel bearing****

  or Every 12 months

### STEERING

- **Retighten the steering gear case mounting bolts to the specified torque****

  or Every 12 months

- **Inspect the steering parts (steering gear, pitman arm, drag link and steering shaft)****

  or Every 12 months

- **Inspect the tie rod and drag link ball joint****

  or Every 12 months

- **Inspect the steering shaft spline and dust boot****

  or Every 12 months

- **Inspect the kingpin, bush and thrust bearing****

  or Every 12 months

- **Check the power steering function****

  or Every 12 months

- **Replace the power steering reservoir tank strainer****

  or Every 12 months

### SERVICE BRAKE FOR FULL AIR TYPE

- **Replace the spring brake rubber parts**

  or Every 12 months

## Every 36,000 miles (60,000 km)

### COOLING SYSTEM

- **Check the cooling fan**

  or Every 12 months

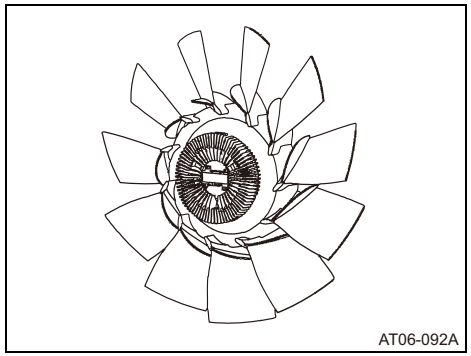


Check and determine if the fan coupling mounting bolts are tightened correctly. If the bolts are loose, tighten them with a torque wrench.

**Tightening torque:** N·m (lbf·ft, kgf·cm)

**Bolt:** 47 (34.7, 480)

Visually check the cooling fan for any damage. If damage, have the cooling fan replaced by your Hino dealer.

**Tightening torque:** N·m (lbf·ft, kgf·cm)

**Bolt:** 26 (19.2, 265)

- **Replace the drive belts****

or Every 12 months

- **Inspect the radiator and heater hoses and clamps****

or Every 12 months

**AIR INTAKE AND EXHAUST SYSTEM**

- **Replace the air cleaner element**

or Every 12 months

For the replacement of the air cleaner element, read and follow the instructions set forth at page 6-11.

- **Replace the intake air hoses and clamps**

or Every 24 months

**CLUTCH FOR MANUAL ADJUST TYPE**

- **Retighten the clutch housing and flywheel housing bolts****

or Every 12 months

**CLUTCH FOR AUTOMATIC ADJUST TYPE (Solo® Clutch)**

- **Retighten the clutch housing and flywheel housing bolts**

or Every 12 months

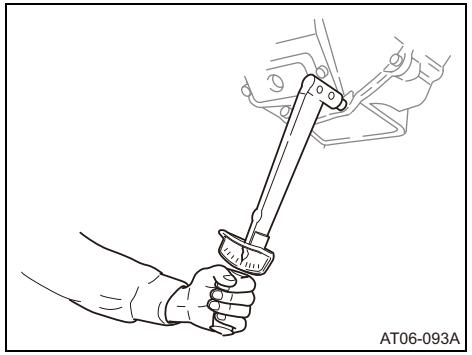


Check if the clutch housing bolts are loose. If they are loose, have them tightened by your Hino dealer.

**Tightening torque:** N·m (lbf·ft, kgf·cm)

**FS-5406A and FS-6406A**

37.5—48.5 (28—35, 382—494)

- **Replace the clutch hose****

or Every 12 months

- **Change the clutch fluid****

or Every 12 months

**AUTOMATIC TRANSMISSION, TES 389 - approved fluid and TES 295 - approved fluid (Allison® 2200HS, 2200RDS, 2500HS, 2500RDS, 3000RDS and 3500RDS)**

- **Retighten the transmission and mounting bolts to the specified torque**

or Every 12 months

- **Check and adjust the shift linkage freely positioned by transmission detent**

or Every 12 months

**PROPELLER SHAFT**

- **Check the propeller shaft deflection****

or Every 12 months

- **Check the propeller shaft spline play****

or Every 12 months

- **Check the propeller shaft universal joint play****

or Every 12 months

- **Check the propeller shaft center bearing support****

or Every 12 months

- **Check the sliding spline and center bearing seal damage****

or Every 12 months

**REAR AXLE**

- **Inspect the axle housing cracks, deformation and damage****

or Every 12 months

**FRONT AXLE**

- **Inspect the axle parts deformation, cracking, wear and tightness (except for tie rod ball joint)****

or Every 12 months

**STEERING**

- **Replace the power steering reservoir tank filter and fluid****

or Every 12 months

**SERVICE BRAKE FOR HYDRAULIC TYPE**

- **Inspect the brake pads and rotor wear and damage**

or Every 4 months

- **Inspect the wheel brake internal parts****

or Every 12 months

- **Check the deformation of the back plate****

or Every 12 months

- **Replace the brake hoses****

or Every 12 months

- **Check the hydraulic booster function****

or Every 12 months

- **Replace the caliper piston seal and boot****

or Every 12 months

- **Check the ABS system function****

or Every 12 months

- **Change the brake fluid****

or Every 12 months

**SERVICE BRAKE FOR FULL AIR TYPE**

- **Inspect the drum wear and damage****

or Every 12 months

- **Inspect the wheel brake internal parts****

or Every 12 months

- **Replace the brake hoses****

or Every 12 months

- **Replace the brake chamber diaphragm****

or Every 12 months

- **Check the ABS system function****

or Every 12 months

**PARKING BRAKE FOR CENTER PARKING TYPE**

- **Inspect the lining wear and clearance between drum and lining****

or Every 12 months

- **Inspect the drum wear and damage****

or Every 12 months

- **Inspect and lubricate the control lever wear and damage****

or Every 12 months

**PARKING BRAKE FOR WHEEL PARKING TYPE**

- **Inspect the control valve and relay valve function****

or Every 12 months

- **Replace the control valve and relay valve rubber parts****

or Every 12 months

- **Replace the spring brake chamber rubber parts****

or Every 12 months

**WHEEL AND TIRE**

- **Check the wheel bearing turning torque****

or Every 12 months

- **Check the wheel bearing lock nut****

or Every 12 months

**SUSPENSION**

- **Check the spring pin and shackle pin wear****

or Every 12 months

- **Check the tightness of U-bolts and clip bands****

or Every 12 months

- **Check the shock absorber function and damage****

or Every 12 months

**AIR SUSPENSION**

- **Check the height of the air bellows and the function of the levelling valve**

or Every 12 months

**⚠CAUTION**

**Check the air springs in accordance with the procedures set forth below. If you notice any abnormalities, contact your Hino dealer.**

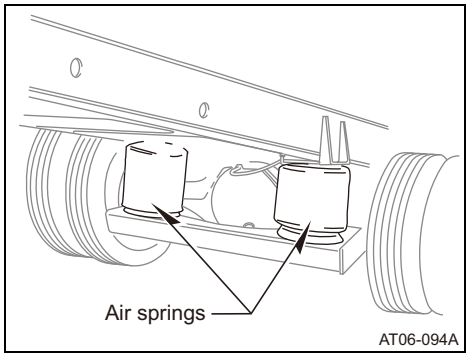


### a. CHECK OF AIR LEAKAGE

- Check to determine if the air springs are damaged or crushed due to air pressure drops as a result of air leakage from the air pipes or air springs, or for any other reason.

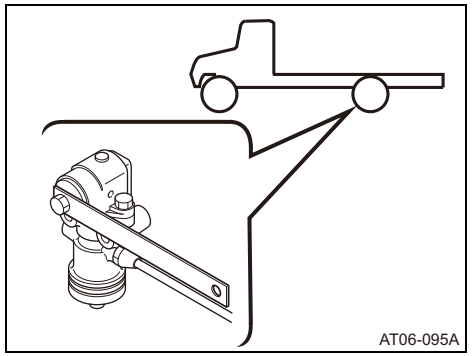
AT06-095A

### b. CHECK THE FOLLOWING AREAS

- Check and determine if there is any looseness or damage at the mounting and connecting positions of the air springs.
- Check and determine if there is any looseness or damage at the levelling valve and the connecting section of the rear axle.

### c. CHECK THE AIR SPRINGS

- Check the air springs for any damage or cracks. If any damage or cracks are noticed, have the air springs replaced by your Hino dealer.
- Check and determine if there is any sand or stones in the lower part of the air springs. If sand or stones are present, remove them carefully so as not to damage the air spring.

**⚠ CAUTION**

**Never drive your vehicle with sand or stones in the air springs. If you do, the air springs could be damaged, resulting in air leakage from the air springs.**

### d. VEHICLE POSTURE

- Check and determine if the load carrying platform comes down temporarily at the moment that the vehicle is loaded and if it returns to almost the same vehicle height as that of an unloaded vehicle a few seconds later.

***NOTICE:***

*If the load-carrying platform does not return to almost the same vehicle height as that of an unloaded vehicle within a few seconds after the vehicle is loaded, the levelling system or the air springs of the vehicle are not functioning properly. In such a situation, contact your Hino dealer for inspection and repair.*

H1-A038E01.book 152 ページ ２０１６年１０月１９日 水曜日 午後５時２６分

**CHASSIS FRAME**

- **Inspect the cracking and deformation of frame****

or Every 12 months

- **Retighten the tightness of the bolts to the specified torque****

or Every 12 months

**ELECTRICAL EQUIPMENT**

- **Inspect the starter bearing grease****

or Every 12 months

- **Check the wiring, connectors and clips tightness and damage****

or Every 12 months

**AIR FLOW, HEATING AND AIR CONDITIONER**

- **Inspect the refrigerant amount of air conditioner**

or Every 12 months

**NOISE EMISSION CONTROL MAINTENANCE SCHEDULE**

- **Check the high idling speed****

or Every 12 months

- **Check the cooling fan**

or Every 12 months

- **Replace air cleaner element**

or Every 12 months

- For the replacement of the air cleaner element, read and follow the instructions set forth at page 6-11.

- **Check and retighten exhaust manifold mounting nuts**

or Every 12 months

Check to determine if the exhaust manifold mounting bolts are loose. If they are loose, have them tightened by your Hino dealer.

| **Tightening torque:** | N·m (lbf·ft, kgf·cm) |
|---|---|
| **Upper:** | 65 (48, 660) |
| **Lower:** | 53 (39, 540) |

- **Check the splash shields and under hood insulator**

or Every 12 months

## —Every 50,000 miles (80,000 km)

**ENGINE**

- **Check the engine valve clearance, adjust if necessary****

or Every 24 months

**CLUTCH FOR MANUAL ADJUST TYPE**

- **Replace the clutch hose****

or Every 12 months

**MANUAL TRANSMISSION (MINERAL OILS) (Eaton® FS-5406A and FS-6406A)**

- **Highway use: Change the transmission gear oil**

or Every 12 months

- For replacement procedure, see page 6-127.

**AUTOMATIC TRANSMISSION, TES 389 - approved fluid (Allison® 2200HS, 2200RDS, 2500HS and 2500RDS)**

- **Change the automatic transmission fluid****

or Every 24 months

- **Replace the spin-on filter****

or Every 24 months

- For check and replacement procedure, see page 6-135.

**AUTOMATIC TRANSMISSION, TES 295 - approved fluid (Allison® 2200HS, 2200RDS, 2500HS and 2500RDS)**

- **Replace the spin-on filter****

or Every 24 months

- For check and replacement procedure, see page 6-135.

**SERVICE BRAKE FOR FULL AIR TYPE**

- **Check the automatic slack adjuster (front and rear)****

or Every 6 months

Remove the pawl nut, pawl spring and pawl. Examine the pawl for grease retention. If the grease is in good condition, install the pawl and pressure relief fitting (or cap screw on early designs), lube through the grease fitting until the lube purges through the pressure relief fitting (or pawl slot on early designs).

If the grease is hardened or the pawl is dry and shows extreme wear, remove the pawl from the vehicle, disassemble it, clean and inspect the internal parts, and lube and install a new boot and seals.

**⚠ WARNING**

- **Never try to adjust the automatic slack adjusters by yourself when you find the pushrod stroke of the service brake excessive. Excessive push stroke may indicate a problem with the automatic adjuster which cannot be corrected manually. In such a situation, immediately contact your Hino dealer.**
- **If you notice any abnormalities in the automatic slack adjuster, have it inspected and repaired by your Hino dealer.**

- **Inspect the check valve, spring brake modulating valve, brake chamber function****

or Every 6 months

## —Every 60,000 miles (100,000 km)

**BREATHER**

- **Replace the breather filter element and an O-ring**

or Every 12 months

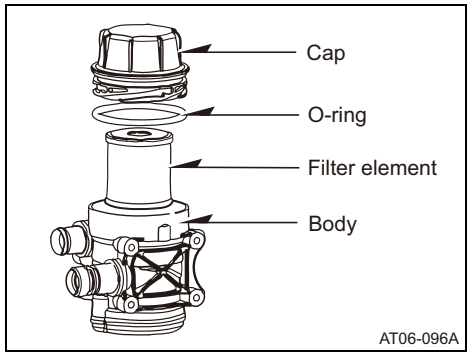


1. Press and turn the cap counterclockwise by hand to remove the filter element.
2. Replace the old filter element with a new one. Fit the filter element in the center of the body when installing it.
3. Remove the O-ring from the cap and replace with a new one (a new O-ring seal is supplied as a component of the new filter element). Apply oil to the new O-ring when installing it to the cap.
4. Turn the cap clockwise by hand to install it.

## —Every 72,000 miles (120,000 km)

**ENGINE**

- **Check the engine compression pressure****

or Every 36 months

- **Check the engine mounting****

or Every 36 months

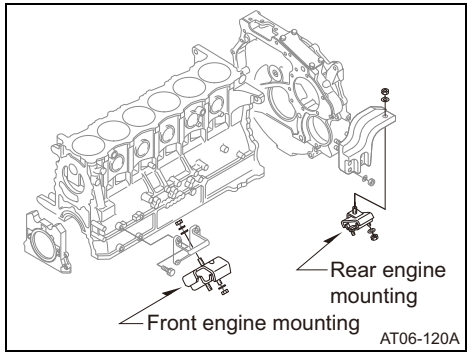


Check and replacement of the front and rear engine mounting rubbers.

Check and tightening of the front and rear engine mounting nuts.

**Tightening torque:** N·m (lbf·ft, kgf·cm)

| | |
|---|---|
| **Front (Engine side):** | 157 (116, 1,600) |
| **Front (Chassis side):** | 91 (67, 930) |
| **Rear:** | 91 (67, 930) |

**FUEL SYSTEM**

- **Replace the fuel hoses (Fuel filter (chassis mount) to supply pump, Fuel tank to fuel filter (chassis mount), Engine to fuel tank)****

or Every 36 months

**AIR INTAKE AND EXHAUST SYSTEM**

- **Inspect the intercooler hoses**

or Every 24 months

When there is air leakage from the hose, the performance will drop, fuel consumption will increase, and engine trouble may also occur, so that they should be checked regularly for cracks on the outer circumstance, loosening of caulked parts, etc.

- **Inspect the turbo charger rotor operation**

or Every 24 months

**STEERING**

- **Replace the power steering rubber parts and hoses****

or Every 12 months

**SERVICE BRAKE FOR FULL AIR TYPE**

- **Replace the ABS control valve****

or Every 24 months

**ELECTRICAL EQUIPMENT**

- **Inspect the starter brush****

or Every 24 months

in. (mm)

| Standard | Service limit |
|---|---|
| 0.807 (20.5) | 0.443 (11.0) |

- **Inspect the engine cylinder block heater harness terminal**

or Every 24 months

## —Every 75,000 miles (120,000 km)

**AUTOMATIC TRANSMISSION, TES 295 - approved fluid (Allison® 3000RDS and 3500RDS)**

- **Replace the main filter and lube filter****

  or Every 36 months

  - For check and replacement procedure, see page 6-135.

## —100,000 miles (160,000 km)

**FRONT AXLE**

- **On-Highway use: “Wheel-end Oil change” interval**

  or Every 12 months

  - For detail, see “Front axle” on page 6-74.

**“—At each replacement period of the brake lining, if greater than 100,000 miles (160,000 km)”**

**SERVICE BRAKE FOR FULL AIR TYPE**

- **Inspect the automatic slack adjuster (Front and Rear)****

  or Every 6 months

  - Removal of the actuator, rod assembly and pawl nut.
  - Cleaning and re-greasing of the actuator and pawl.
  - Check of the internal condition of the adjuster.
- **Replace the return spring****

  or Every 6 months
- **Lubricate the S-camshaft rollers and anchor pins**

  or Every 6 months
- **Replace the brake valve, relay valve, spring brake control valve rubber parts****

  or Every 12 months

## —Every 120,000 miles (200,000 km)

**AIR SUSPENSION**

- **Replace the suspension parts****

or Every 24 months

## —Every 150,000 miles (240,000 km)

**AUTOMATIC TRANSMISSION, TES 295 - approved fluid (Allison® 2200HS, 2200RDS, 2500HS and 2500RDS)**

- **Change the automatic transmission fluid**

or Every 48 months

- For check and replacement procedure, see page 6-135.

**DEF-SCR SYSTEM (EXHAUST GAS AFTER TREATMENT SYSTEM)**

- **Replace the PM sensor****

or Every 60 months

- **Replace the DEF filter**

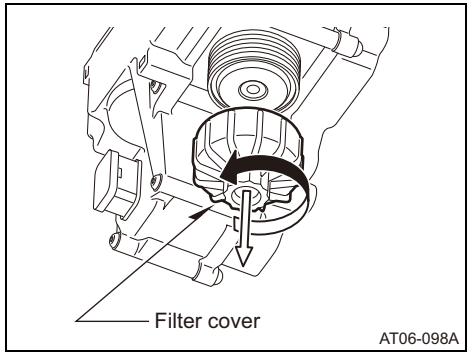


1. Turn the filter cover counterclockwise and remove the DEF pump filter.

***NOTICE***

- *Contamination or damage of the sealing surface on the housing is no acceptable.*
- *Wrench size: 1.063 in. (27 mm)*

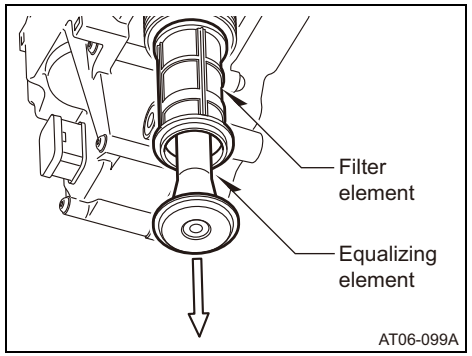


2. When removing the filter cover, the DEF will spill over. Prepare the container and waste cloth for spilled DEF.
3. Remove the filter element and equalizing element from the DEF pump, and replace with new one.

***NOTICE***

- *Protect the filter area in the housing from contamination.*
- *The sealing surface on the housing must be clean. No contamination or particles acceptable.*
- *When replacing the filter element and equalizing element, do not pry them off with a screwdriver or similar tool. Doing so may cause damage to the DEF pump, resulting in DEF leaks.*
- *When replacing the filter element, do not wear fibrous gloves to avoid foreign matter.*

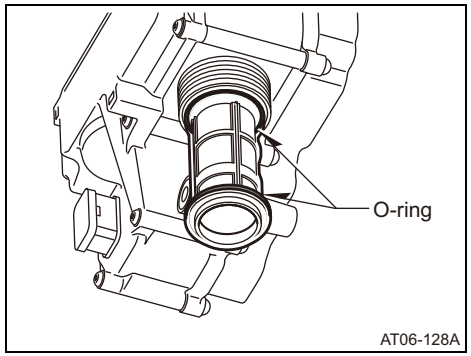


4. Apply oil to the O-ring.

**⚠ CAUTION**

**For the mounting process, oil the O-ring with Mobil Velocite Oil No.6 or equivalent.**

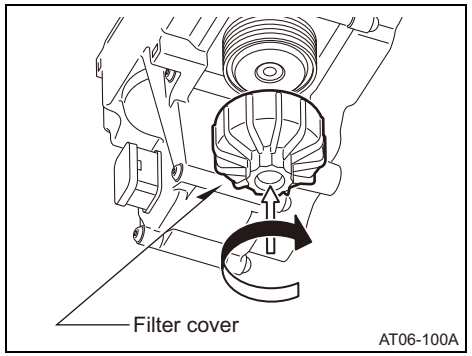


5. Tighten the filter cover.

***NOTICE***

- *All sealing surface must be clean. Contamination or particles are not acceptable.*
- *It must be checked if there are cracks around the area of the filter cover. No cracks in the material are allowed. If there are cracks in the housing, the entire supply module must be exchanged. If there are cracks in the filter cover, the filter cover must be exchanged.*
- *Wrench size: 1.063 in. (27 mm)*

**Tightening torque:** N·m (lbf·ft, kgf·cm)
20—25 (15.0—18.0, 204—254)

## —Every 240,000 miles (400,000 km)

**FUEL SYSTEM**

- **Replace the fuel filter (Engine mount)**

or Every 84 months

**⚠ CAUTION**

- **While working, be careful not to make dirt and water enter parts.**
- **Before installation, make sure that there is no dirt on the connecting area of the each parts.**
- **While at work, the air enters into the fuel system, after replacing the fuel filter, bleed the air from the fuel system without fail.**
- **Always use the Hino genuine parts for the fuel filter element.**
- **Drain the fuel in accordance with the regulation of disposal specified in each region.**

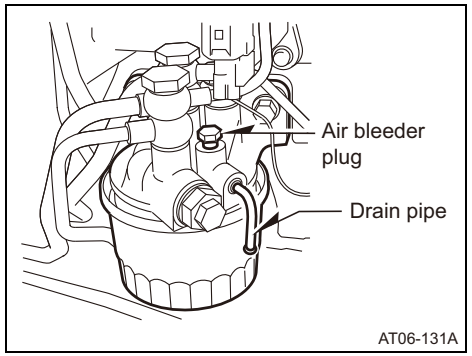


1. Prepare the container and a waste cloth for waste fuel under the fuel filter.
2. Remove the drain plug located at the lower part of the fuel filter element and loosen the air bleeder plug to drain fuel.

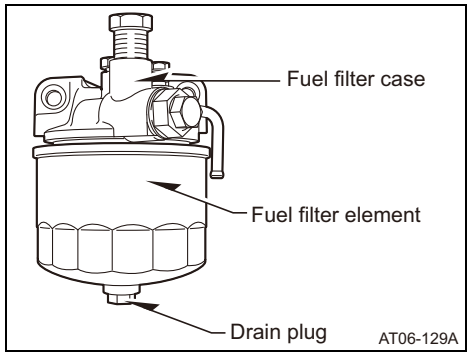


3. Turn the fuel filter element counterclockwise with a fuel filter wrench and remove the fuel filter element.

**⚠ CAUTION**

- **Make sure that no O-ring remains on the fuel filter case.**
- **Remove dirt on the O-ring mounting surface.**
- **The O-ring is non-reusable.**

4. Clean any dust, dirt or debris off the contacting face of the O-ring on the fuel filter element containing the fuel filter case.
5. Apply fuel to the O-ring for the new fuel filter element and install the fuel filter element on the fuel filter case by turning it slightly clockwise by hand until the new fuel filter element comes in contact with the sealing face of the fuel filter case.
6. From this position, turn the new fuel filter element using the fuel filter wrench another 2/3 turns.

**⚠ CAUTION**

- **Do not reuse the element.**
- **Be careful not to damage the O-ring by twisting it.**
- **After operation, wipe out leaked water or fuel and check again for fuel leakage after the engine is started.**

## —Every 250,000 miles (400,000 km)

**ELECTRICAL EQUIPMENT**

- **Replace the alternator (Brush type)**
- **Replace the alternator (Brush-less type)**

## —Every 300,000 miles (480,000 km)

**AUTOMATIC TRANSMISSION, TES 295 - approved fluid (Allison® 3000RDS and 3500RDS)**

- **Change the automatic transmission fluid**

  or Every 48 months

  - For check and replacement procedure, see page 6-135.

## —Every 360,000 miles (600,000 km)

**COOLING SYSTEM**

- **Change the coolant (Pink type)****

  or Every 36 months

## —Every 500,000 miles (800,000 km)

**COOLING SYSTEM**

- **Change the coolant (Blue type)****

  or Every 48 months

**MANUAL TRANSMISSION (SYNTHETIC OILS) (Eaton® FS-5406A and FS-6406A)**

- **Highway use: Change the transmission gear oil**

  or Every 60 months

  - See “Transmission lubrication” on page 6-68.
  - For replacement procedure, see page 6-127.

## —First 30 hours

**MANUAL TRANSMISSION (MINERAL OILS) (Eaton® FS-5406A and FS-6406A)**

- **Off-highway use: Change the transmission gear oil**
  - See “Transmission lubrication” on page 6-68.
  - For replacement procedure, see page 6-127.

## —Every 40 hours

**MANUAL TRANSMISSION (MINERAL OILS) AND (SYNTHETIC OILS) (Eaton® FS-5406A and FS-6406A)**

- **Off-highway use: Inspect the oil level, add if necessary, and check for leaks**
  - See “Transmission lubrication” on page 6-68.
  - For inspection, see page 6-127.

## —Every 500 hours

**MANUAL TRANSMISSION (MINERAL OILS) (Eaton® FS-5406A and FS-6406A)**

- **Off-highway use: Change the transmission gear oil where severe dirt conditions exist**
  - See “Transmission lubrication” on page 6-68.
  - For replacement procedure, see page 6-127.

## —Every 900 hours

**SERVICE BRAKE FOR FULL AIR TYPE**

- **Check the air dryer (Reservoir drain)****

  or Every 25,000 miles (40,000 km)

  or Every 3 months

## —Every 1,000 hours

**MANUAL TRANSMISSION (MINERAL OILS) (Eaton® FS-5406A and FS-6406A)**

- **Off-highway use (Normal off-highway use): Change the transmission gear oil**
  - See “Transmission lubrication” on page 6-68.
  - For inspection, see page 6-127.

## —Every 2,000 hours

**MANUAL TRANSMISSION (SYNTHETIC OILS) (Eaton® FS-5406A and FS-6406A)**

- **Off-highway use (Normal off-highway use): Change the transmission gear oil**
  - See “Transmission lubrication” on page 6-68.
  - For inspection, see page 6-127.

## —Every 1 month

**CLUTCH FOR MANUAL ADJUST TYPE**

- **Lubricate the clutch release sleeve and shaft**

  or Every 9,000 miles (15,000 km)
  - For procedure, see page 6-132.

**CLUTCH FOR AUTOMATIC ADJUST TYPE (Solo® Clutch)**

- **Lubricate the clutch release sleeve and shaft**

  or Every 9,000 miles (15,000 km)
  - For procedure, see page 6-133.

**AUTOMATIC TRANSMISSION, TES 389 - approved fluid and TES 295 - approved fluid (Allison® 2200HS, 2200RDS, 2500HS, 2500RDS, 3000RDS and 3500RDS)**

- **Check the automatic transmission fluid level, fluid leakage and case damage**

  or Every 6,000 miles (10,000 km)
  - For check and replacement procedure, see page 6-135.

PROPELLER SHAFT

- **Lubricate the propeller shaft spline play**

or Every 6,000 miles (10,000 km)

- **Lubricate the propeller shaft universal joints**

or Every 6,000 miles (10,000 km)

AIR FLOW, HEATING AND AIR CONDITIONER

- **Clean the air filter (for cab ventilator)**

or Every 3,000 miles (5,000 km)

- For replacement procedure, see page 6-126.

## —Every 2 months

LUBRICATING SYSTEM

- **Change the non-genuine motor oil TYPE 1 & 2**

or Every 6,000 miles (10,000 km) for TYPE 1
or Every 10,000 miles (16,000 km) for TYPE 2

- Type of operation details, see page 6-63.

CLUTCH FOR MANUAL ADJUST TYPE

- **Check the clutch facing wear** (Not available with automatic transmission)**

or Every 9,000 miles (15,000 km)

CLUTCH FOR AUTOMATIC ADJUST TYPE (Solo® Clutch)

- **Check the clutch facing wear (Check the wear indicator)****

or Every 9,000 miles (15,000 km)

SERVICE BRAKE FOR HYDRAULIC TYPE

- **Check the fluid leakage, damage and tightness****

or Every 6,000 miles (10,000 km)

- **Check the brake pipe and hose damage****

or Every 6,000 miles (10,000 km)

SERVICE BRAKE FOR FULL AIR TYPE

- **Check the air leakage, damage and tightness****

or Every 6,000 miles (10,000 km)

- **Lubricate the automatic slack adjuster (front and rear)****

or Every 6,000 miles (10,000 km)

- For procedure, see page 6-129.

- **Lubricate the brake spider bushing (front and rear) and brake camshaft bracket bushing (rear)**

or Every 6,000 miles (10,000 km)

**Grease:**
To determine the proper grease to use, see “Table 7: Recommended lubrication” on page 6-105.

- **Check the brake pipe and hose damage****

or Every 6,000 miles (10,000 km)

**PARKING BRAKE FOR WHEEL PARKING TYPE**

- **Check the leakage, damage and tightness****

or Every 6,000 miles (10,000 km)

**WHEEL AND TIRE**

- **Check the wheel nut tightness**

or Every 6,000 miles (10,000 km)

  - For procedure, see page 6-125.

- **Check the wheel disc damage**

  - Visually check wheels for damage, cracks or bends. See page 6-86.

or Every 6,000 miles (10,000 km)

**SUSPENSION**

- **Check the leaf spring damage and deformation**

or Every 6,000 miles (10,000 km)

  - For procedure, see page 6-130.

- **Check the tightness of spring pin fitting nut and lock nut, retighten if necessary**

or Every 6,000 miles (10,000 km)

  - For procedure, see page 6-131.

- **Check the shock absorber mounting, retighten if necessary**

or Every 6,000 miles (10,000 km)

  - For procedure, see page 6-131.

- **Lubricate the spring pin and shackle pin (front and rear)**

or Every 6,000 miles (10,000 km)

- **Lubricate the spring slide seat**

or Every 6,000 miles (10,000 km)

## —Every 3 months

**SERVICE BRAKE FOR FULL AIR TYPE**

- **Check the brake chamber rod stroke****

or Every 24,000 miles (40,000 km)

- **Check the automatic slack adjuster (front and rear)****

or Every 24,000 miles (40,000 km)

  - For procedure, see page 6-146.

- **Inspect the brake valve, relay valve, spring brake control valve, protection valve function****

or Every 24,000 miles (40,000 km)

- **Check the air dryer (Reservoir drain)****

or Every 25,000 miles (40,000 km)
or Every 900 hours

**AIR SUSPENSION**

- **Check the looseness, excessive play, or damage of mounting or joint of the suspension (Air spring, shock absorber)**

or Every 3,000 miles (5,000 km)

## —Every 4 months

### SERVICE BRAKE FOR HYDRAULIC TYPE

- **Inspect the brake pads and rotor wear and damage**

  or Every 36,000 miles (60,000 km)

### SERVICE BRAKE FOR FULL AIR TYPE

- **Check the lining wear (thickness), replace if necessary****

  or Every 12,000 miles (20,000 km)

### PARKING BRAKE FOR CENTER PARKING TYPE

- **Check the control cable slack and damage****

  or Every 12,000 miles (20,000 km)

  - For procedure, see page 6-139.

- **Check the drum mounting nuts**

  or Every 12,000 miles (20,000 km)

  - For procedure, see page 6-140.

### ELECTRICAL EQUIPMENT

- **Check the battery charging**

  or Every 12,000 miles (20,000 km)

  - Read and follow the procedures set forth at page 6-78.

### NOISE EMISSION CONTROL MAINTENANCE SCHEDULE

- **Check the air intake system hoses and clamps**

  or Every 12,000 miles (20,000 km)

## —Every 6 months

### FUEL SYSTEM

- **Replace the fuel filter (Chassis mount)**

  or Every 20,000 miles (32,000 km)

  - For procedure, see page 6-142.

### LUBRICATING SYSTEM

- **Change the Hino genuine motor oil TYPE 1 & 2**

  or Every 12,000 miles (20,000 km) for TYPE 1
  or Every 20,000 miles (32,000 km) for TYPE 2

  - Type of operation details, see page 6-63.

### AIR INTAKE AND EXHAUST SYSTEM

- **Clean the intercooler body****

  or Every 10,000 miles (16,000 km)

  - For procedure, see page 6-134.

**CLUTCH FOR MANUAL ADJUST TYPE**

- **Check the clutch fluid leakage and damage**

  or Every 20,000 miles (32,000 km)

  - For procedure, see page 6-145.

**REAR AXLE**

- **On-off Highway and off Highway use: Change the differential gear oil**
  - For replacement procedure, see page 6-75.
- **Inspect and clean the axle housing breather**

  or Every 18,000 miles (30,000 km)

**SERVICE BRAKE FOR FULL AIR TYPE**

- **Check the automatic slack adjuster (front and rear)****

  or Every 50,000 miles (80,000 km)

  - For procedure, see page 6-153.
- **Replace the return spring****

  or Every 100,000 miles (160,000 km)
- **Lubricate the S-camshaft rollers and anchor pins**

  or Every 100,000 miles (160,000 km)
- **Inspect the check valve, spring brake modulating valve, brake chamber function****

  or Every 50,000 miles (80,000 km)

**SUSPENSION**

- **Check the tightness of spring bracket**

  or Every 18,000 miles (30,000 km)

**ELECTRICAL EQUIPMENT**

- **Clean the battery terminal**

  or Every 18,000 miles (30,000 km)

  - For procedure, see page 6-142.

**CAB**

- **Check the rear cab support bolts**

  or Every 18,000 miles (30,000 km)

  - Type of operation details, see page 6-142.
- **Check the rear cab mounting brackets, cushion rubber mounting bolt and nut**

  or Every 18,000 miles (30,000 km)

H1-A038E01.book 167 ページ ２０１６年１０月１９日 水曜日 午後５時２６分

NOISE EMISSION CONTROL MAINTENANCE SCHEDULE

- **Inspect the muffler with catalyst (exhaust gas after treatment system) and exhaust pipe clamps, retighten if necessary**

  or Every 10,000 miles (16,000 km)

  - Type of operation details, see page 6-137.

## —Every 12 months

FUEL SYSTEM

- **Inspect the fuel injector of the exhaust system****

BREATHER

- **Replace the breather filter element and an O-ring**

  or Every 60,000 miles (100,000 km)

  - For procedure, see page 6-154.

COOLING SYSTEM

- **Check the cooling fan**

  or Every 36,000 miles (60,000 km)

  - For procedure, see page 6-147.
- **Replace the drive belts****

  or Every 36,000 miles (60,000 km)
- **Inspect the radiator and heater hoses and clamps****

  or Every 36,000 miles (60,000 km)

AIR INTAKE AND EXHAUST SYSTEM

- **Replace the air cleaner element**

  or Every 36,000 miles (60,000 km)

  - For replacement procedure, see page 6-11.

CLUTCH FOR MANUAL ADJUST TYPE

- **Retighten the clutch housing and flywheel housing bolts****

  or Every 36,000 miles (60,000 km)
- **Replace the clutch hose****

  or Every 50,000 miles (80,000 km)

CLUTCH FOR AUTOMATIC ADJUST TYPE (Solo® Clutch)

- **Retighten the clutch housing and flywheel housing bolts**

  or Every 36,000 miles (60,000 km)

  - For procedure, see page 6-148.
- **Replace the clutch hose****

  or Every 36,000 miles (60,000 km)
- **Change the clutch fluid****

  or Every 36,000 miles (60,000 km)

**MANUAL TRANSMISSION (MINERAL OILS) (Eaton® FS-5406A and FS-6406A)**

- **Highway use: Change the transmission gear oil**

or Every 50,000 miles (80,000 km)

- For replacement procedure, see page 6-127.

**AUTOMATIC TRANSMISSION, TES 389 - approved fluid (Allison® 3000RDS and 3500RDS)**

- **Change the automatic transmission fluid****

or Every 25,000 miles (40,000 km)

- **Replace the main filter and lube filter****

or Every 25,000 miles (40,000 km)

- For check and replacement procedure, see page 6-135.

**AUTOMATIC TRANSMISSION, TES 389 - approved fluid and TES 295 - approved fluid (Allison® 2200HS, 2200RDS, 2500HS, 2500RDS, 3000RDS and 3500RDS)**

- **Retighten the transmission and mounting bolts to the specified torque**

or Every 36,000 miles (60,000 km)

- **Check and adjust the shift linkage freely positioned by transmission detent**

or Every 36,000 miles (60,000 km)

**PROPELLER SHAFT**

- **Check the propeller shaft deflection****

or Every 36,000 miles (60,000 km)

- **Check the propeller shaft spline play****

or Every 36,000 miles (60,000 km)

- **Check the propeller shaft universal joint play****

or Every 36,000 miles (60,000 km)

- **Check the propeller shaft center bearing support****

or Every 36,000 miles (60,000 km)

- **Retighten the propeller shaft mounting bolts to the specified torque**

or Every 18,000 miles (30,000 km)

- For procedure, see page 6-140.

- **Check the sliding spline and center bearing seal damage****

or Every 36,000 miles (60,000 km)

**REAR AXLE**

- **Inspect the axle housing cracks, deformation and damage****

or Every 36,000 miles (60,000 km)

- **Retighten axle shaft mounting bolts**

or Every 18,000 miles (30,000 km)

## FRONT AXLE

*For more details of following items, see "Front axle" on page 6-74.*

- **"Front non-drive axle greasing" (Ball studs on steering arm, tie-rod ends, and drag link)**

  or Every 6,000 miles (10,000 km)
- **"Front non-drive axle greasing" (King pin and bushings, thrust bearings)**

  or Every 18,000 miles (30,000 km)
- **"Wheel-end Oil change" interval**

  or Every 100,000 miles (160,000 km)
- **Inspect the axle parts deformation, cracking, wear and tightness (except for tie rod ball joint)****

  or Every 36,000 miles (60,000 km)
- **Inspect the wheel bearing end play****

  or Every 30,000 miles (50,000 km)
- **Inspect the wheel alignment and turning angle****

  or Every 30,000 miles (50,000 km)
- **Inspect the wheel bearing****

  or Every 30,000 miles (50,000 km)

## STEERING

- **Retighten the steering gear case mounting bolts to the specified torque****

  or Every 30,000 miles (50,000 km)
- **Inspect the steering parts (steering gear, pitman arm, drag link and steering shaft)****

  or Every 30,000 miles (50,000 km)
- **Inspect and lubricate the tie rod and drag link ball joint****

  or Every 6,000 miles (10,000 km) for lubricate
  or Every 30,000 miles (50,000 km) for inspection
- **Inspect and lubricate the steering shaft spline and dust boot****

  or Every 12,000 miles (20,000 km) for lubricate
  or Every 30,000 miles (50,000 km) for inspection
- **Inspect and lubricate the kingpin, bush and thrust bearing****

  or Every 18,000 miles (30,000 km) for lubricate
  or Every 30,000 miles (50,000 km) for inspection
- **Check the power steering function****

  or Every 30,000 miles (50,000 km)
- **Replace the power steering reservoir tank strainer****

  or Every 30,000 miles (50,000 km)
- **Replace the power steering reservoir tank filter and fluid****

  or Every 36,000 miles (60,000 km)
- **Replace the power steering rubber parts and hoses****

  or Every 72,000 miles (120,000 km)

**SERVICE BRAKE FOR HYDRAULIC TYPE**

- **Inspect the wheel brake internal parts****

  or Every 36,000 miles (60,000 km)
- **Check the deformation of the back plate****

  or Every 36,000 miles (60,000 km)
- **Replace the brake hoses****

  or Every 36,000 miles (60,000 km)
- **Check the hydraulic booster function****

  or Every 36,000 miles (60,000 km)
- **Replace the caliper piston seal and boot****

  or Every 36,000 miles (60,000 km)
- **Check the ABS system function****

  or Every 36,000 miles (60,000 km)
- **Change the brake fluid****

  or Every 36,000 miles (60,000 km)

**SERVICE BRAKE FOR FULL AIR TYPE**

- **Inspect the drum wear and damage****

  or Every 36,000 miles (60,000 km)
- **Inspect the wheel brake internal parts****

  or Every 36,000 miles (60,000 km)
- **Inspect the brake spider damage and deformation****

  or Every 6,000 miles (10,000 km)
- **Replace the brake hoses****

  or Every 36,000 miles (60,000 km)
- **Replace the brake chamber diaphragm****

  or Every 36,000 miles (60,000 km)
- **Check the ABS system function****

  or Every 36,000 miles (60,000 km)
- **Replace the spring brake rubber parts**

  or Every 30,000 miles (50,000 km)
- **Replace the brake valve, relay valve, spring brake control valve rubber parts****

  or Every 100,000 miles (160,000 km)

**PARKING BRAKE FOR CENTER PARKING TYPE**

- **Inspect the lining wear and clearance between drum and lining****

  or Every 36,000 miles (60,000 km)
- **Inspect the drum wear and damage****

  or Every 36,000 miles (60,000 km)
- **Inspect and lubricate the control lever wear and damage****

  or Every 36,000 miles (60,000 km)

**PARKING BRAKE FOR WHEEL PARKING TYPE**

- **Inspect the control valve and relay valve function****

  or Every 36,000 miles (60,000 km)
- **Replace the control valve and relay valve rubber parts****

  or Every 36,000 miles (60,000 km)
- **Replace the spring brake chamber rubber parts****

  or Every 36,000 miles (60,000 km)

**WHEEL AND TIRE**

- **Check the wheel bearing turning torque****

  or Every 36,000 miles (60,000 km)

- **Check the wheel bearing lock nut****

  or Every 36,000 miles (60,000 km)

**SUSPENSION**

- **Check the spring pin and shackle pin wear****

  or Every 36,000 miles (60,000 km)

- **Check the tightness of U-bolts and clip bands****

  or Every 36,000 miles (60,000 km)

- **Check the shock absorber function and damage****

  or Every 36,000 miles (60,000 km)

**AIR SUSPENSION**

- **Inspect the torque rod rubber bushing crack**

  or Every 9,000 miles (15,000 km)

- **Check the air bellows height**

  or Every 36,000 miles (60,000 km)

  - For procedure, see page 6-150.

**CHASSIS FRAME**

- **Inspect the cracking and deformation of frame****

  or Every 36,000 miles (60,000 km)

- **Retighten the tightness of the bolts to the specified torque****

  or Every 36,000 miles (60,000 km)

**ELECTRICAL EQUIPMENT**

- **Inspect the starter bearing grease****

  or Every 36,000 miles (60,000 km)

- **Check the wiring, connectors and clip tightness and damage****

  or Every 36,000 miles (60,000 km)

**AIR FLOW, HEATING AND AIR CONDITIONER**

- **Inspect the refrigerant amount of air conditioner**

  or Every 36,000 miles (60,000 km)

**NOISE EMISSION CONTROL MAINTENANCE SCHEDULE**

- **Check the high idling speed****

  or Every 36,000 miles (60,000 km)

- **Check the cooling fan**

  or Every 36,000 miles (60,000 km)

- **Replace air cleaner element**

  or Every 36,000 miles (60,000 km)

  - For the replacement of the air cleaner element, read and follow the instructions set forth at page 6-11.

- **Check and retighten exhaust manifold mounting nuts**

  or Every 36,000 miles (60,000 km)

  - See page 6-152 for specified torque.

- **Check the splash shields and under hood insulator**

  or Every 36,000 miles (60,000 km)

## —Every 24 months

**ENGINE**

- **Check the engine valve clearance, adjust if necessary****

or Every 50,000 miles (80,000 km)

**AIR INTAKE AND EXHAUST SYSTEM**

- **Check and replace the intake air hose and clamps**

or Every 12,000 miles (20,000 km) for check
or Every 36,000 miles (60,000 km) for replace

- **Inspect the intercooler hoses**

or Every 72,000 miles (120,000 km)

- For procedure, see page 6-155.

- **Inspect the turbo charger rotor operation**

or Every 72,000 miles (120,000 km)

**AUTOMATIC TRANSMISSION, TES 389 - approved fluid (Allison® 2200HS, 2200RDS, 2500HS and 2500RDS)**

- **Change the automatic transmission fluid****

or Every 50,000 miles (80,000 km)

- **Replace the spin-on filter****

or Every 50,000 miles (80,000 km)

- For check and replacement procedure, see page 6-135.

**AUTOMATIC TRANSMISSION, TES 295 - approved fluid (Allison® 2200HS, 2200RDS, 2500HS and 2500RDS)**

- **Replace the spin-on filter**

or Every 50,000 miles (80,000 km)

- For check and replacement procedure, see page 6-135.

**SERVICE BRAKE FOR FULL AIR TYPE**

- **Replace the ABS control valve****

or Every 72,000 miles (120,000 km)

**AIR SUSPENSION**

- **Replace the suspension parts****

or Every 120,000 miles (200,000 km)

**ELECTRICAL EQUIPMENT**

- **Inspect the starter brush****

or Every 72,000 miles (120,000 km)

- For procedure, see page 6-155.

- **Inspect the engine cylinder block heater harness terminal**

or Every 72,000 miles (120,000 km)

A-06-3.fm 173 ページ ２０１６年１０月２６日 水曜日 午前１０時４８分

## —Every 36 months

**ENGINE**

- **Check the engine compression pressure****

or Every 72,000 miles (120,000 km)

- **Check the engine mounting****
  - For procedure, see page 6-154.

or Every 72,000 miles (120,000 km)

**FUEL SYSTEM**

- **Replace the fuel hoses (Fuel filter (chassis mount) to supply pump, Fuel tank to fuel filter (chassis mount), Engine to fuel tank)****

or Every 72,000 miles (120,000 km)

**COOLING SYSTEM**

- **Change the coolant (Pink type)****

or Every 360,000 miles (600,000 km)

**AIR INTAKE AND EXHAUST SYSTEM**

- **Replace the hose for difference pressure sensor of DPR****

**AUTOMATIC TRANSMISSION, TES 295 - approved fluid (Allison® 3000RDS and 3500RDS)**

- **Replace the main filter and lube filter****
  - For check and replacement procedure, see page 6-135.

or Every 75,000 miles (120,000 km)

**SERVICE BRAKE FOR FULL AIR TYPE**

- **Replace the air dryer (Desiccant cartridge)****

## —Every 48 months

**COOLING SYSTEM**

- **Change the coolant (Blue type)****

or Every 500,000 miles (800,000 km)

**AUTOMATIC TRANSMISSION, TES 295 - approved fluid (Allison® 3000RDS and 3500RDS)**

- **Change the automatic transmission fluid****
  - For check and replacement procedure, see page 6-135.

or Every 300,000 miles (480,000 km)

**AUTOMATIC TRANSMISSION, TES 295 - approved fluid (Allison® 2200HS, 2200RDS, 2500HS and 2500RDS)**

- **Change the automatic transmission fluid****
  - For check and replacement procedure, see page 6-135.

or Every 150,000 miles (240,000 km)

## —Every 60 months

**MANUAL TRANSMISSION (SYNTHETIC OILS) (Eaton® FS-5406A and FS-6406A)**

- **Highway use and Off-highway use (Normal off-highway use): Change the transmission gear oil**
  - See “Transmission lubrication” on page 6-68.

or Every 500,000 miles (800,000 km) for Highway use
or Every 2,000 hours for Off-highway use

**DEF-SCR SYSTEM (EXHAUST GAS AFTER TREATMENT SYSTEM)**

- **Replace the PM sensor****

or Every 150,000 miles (240,000 km)

## —Every 84 months

**FUEL SYSTEM**

- **Replace the fuel filter (Engine mount)**

or Every 240,000 miles (400,000 km)

- For replacement procedure, see page 6-159.

H1-A038E01.book　1 ページ　２０１６年１０月１９日　水曜日　午後５時２６分

# SECTION 7

## REPORTING SAFETY DEFECTS

Reporting safety defects to the United States Government ..... 7-2
Reporting safety defects to the Hino Motors Sales ..... 7-2

### Reporting safety defects to the United States Government

If you believe that your vehicle has a defect which could cause a crash or could cause injury or death, you should immediately inform the National Highway Traffic Safety Administration (NHTSA) in addition to notifying Hino Motors Sales U.S.A., Inc.

If NHTSA receives similar complaints, it may open an investigation, and if it finds that a safety defect exists in a group of vehicles, it may order a recall and remedy campaign. However, NHTSA cannot become involved in individual problems between you, your dealer, or Hino Motors Sales U.S.A., Inc.

To contact NHTSA, you may call the Vehicle Safety Hotline toll-free at 1-888- 327-4236 (TTY: 1-800-424-9153); go to http://www.safercar.gov; or write to: Administrator, NHTSA, 400 Seventh Street, SW., Washington, DC 20590.

You can also obtain other information about motor vehicle safety from http://www.safercar.gov.

### Reporting safety defects to the Hino Motors Sales

In addition to notifying NHTSA, please notify Hino Motors Sales U.S.A., Inc., of your reports by contacting Hino Motors Sales National Service Manager at (248) 699- 9300.

H1-A038E01.book 1 ページ ２０１６年１０月１９日 水曜日 午後５時２６分

# SECTION 8

## SEAT BELT INSTRUCTIONS FOR CANADIAN OWNERS

Seat belt instructions for Canadian owners (in French)..... 8-2

**Seat belt instructions for Canadian owners (in French)—**

**The following is a French explanation of seat belt instructions extracted from the seat belt section in this manual.**

**Ceintures de sécurité—**

Les occupants doivent toujours utiliser une ceinture de sécurité quand le véhicule se déplace. Le fait de ne pas porter de ceinture de sécurité, ou d'utiliser une ceinture de sécurité qui n'est pas positionnée correctement, augmente le risque pour l'occupant à s'exposer à de graves blessures voire à la mort en cas d'arrêt brutal du véhicule ou en cas d'accident. Cette section fournit les avertissements et les informations concernant l'utilisation des ceintures de sécurité par des adultes, des enfants, des personnes à incapacité physique et des femmes enceintes, mais également à propos de l'entretien et du remplacement de la ceinture de sécurité, et ils doivent être lus et observés. Cette section fournit également des informations très importantes sur l'utilisation des systèmes de retenue d'enfant et d'enfant en bas âge employés en même temps que les ceintures de sécurité. Tous les systèmes de retenue d'enfant et d'enfant en bas âge ne peuvent pas être utilisés avec ce véhicule. Les avertissements et les informations détaillés sur des systèmes de retenue d'enfant et d'enfant en bas âge sont mentionnés à partir de la page 2-36.

**⚠ AVERTISSEMENT**

**Il est impératif de toujours utiliser une ceinture de sécurité quand le véhicule se déplace. Le fait de ne pas porter de ceinture de sécurité ou d'utiliser une ceinture de sécurité qui n'est pas positionnée correctement augmente le risque à s'exposer à de graves blessures voire à la mort en cas d'arrêt brutal du véhicule ou en cas d'accident.**

- **Chaque personne dans le véhicule doit être correctement assise sur son siège, doit attacher correctement sa ceinture de sécurité appartenant à ce siège avant que le véhicule commence à se déplacer, et doit conserver sa ceinture de sécurité correctement attachée pendant que le véhicule se déplace.**
- **Chaque ceinture de sécurité doit être utilisée par une personne seulement. Ne jamais utiliser une seule ceinture de sécurité pour deux personnes ou davantage.**

- **Il faut toujours retenir les enfants dans le véhicule avec le système de retenue approprié à l'âge, la taille et le poids de chaque enfant. Se reporter à la page 2-36.**
- **Ne jamais incliner les dossiers de siège plus que nécessaire. Plus les dossiers de siège sont inclinés vers l'arrière, plus le risque de blessures provoquées par des positions incorrectes des ceintures de sécurité et une position assise incorrecte est grand.**
- **Les femmes enceintes doivent toujours porter la sangle ventrale de la ceinture de sécurité aussi bas que possible en travers du bassin et en-dessous de l'abdomen.**
- **Les ceintures de sécurité abîmées entraînent une réduction de leur efficacité globale et augmente le risque de blessures graves et de mort quand le véhicule est utilisé.**
- **Ne jamais permettre à ce que la sangle ou les accessoires matériels de la ceinture de sécurité soient endommagés. Ne pas laisser la sangle ou les accessoires matériels se faire coincés ou pincés dans les sièges ou les portes.**
- **Inspecter régulièrement le système de ceinture de sécurité pour déceler d'éventuels dommages. Vérifier les entailles, les déchirures, un effilochement et les pièces desserrées. Les ceintures de sécurité endommagées peuvent se rompre lors d'un accident. Les pièces endommagées et desserrées doivent être remplacées par un concessionnaire Hino. Ne jamais démonter ni modifier le système.**
- **Maintenir les sangles propres et sèches. Si les sangles ont besoin d'être nettoyées, employer une solution à base de savon doux ou d'eau tiède. Ne jamais employer de décolorant, teinture ou de produits d'entretien abrasifs étant donné qu'ils peuvent sérieusement affaiblir les sangles. Se reporter à « Entretien de l'intérieur » à la page 5-2.**
- **Remplacer l'ensemble de ceinture de sécurité (y compris les boulons) si le véhicule est impliqué dans un accident grave. Tout l'ensemble doit être remplacé même si des parties endommagées ne sont pas évidentes.**
- **Les ceintures de sécurité endommagées ne peuvent pas être réparées et doivent être remplacées.**

H1-A038E01.book 4 ページ ２０１６年１０月１９日 水曜日 午後５時２６分

- **Il faut toujours retenir les enfants dans le véhicule avec le système de retenue qui est autorisé à être utilisé avec ce véhicule mais également un système de retenue approprié à l'âge, la taille et le poids de l'enfant. Se reporter à la page 2-36.**
- **Tous les occupants du véhicule, y compris les enfants et les bébés, doivent être correctement retenus à chaque fois que l'on conduit le véhicule. Un enfant qui ne serait pas retenu ou serait retenu de façon incorrecte risque d'être blessé voire tué en venant se frapper sur les parties intérieures du véhicule ou d'être éjecté de celui-ci lors d'une manœuvre brutale ou d'un accident.**
- **Ne jamais permettre aux enfants ou aux bébés d'être transportés dans le véhicule assis sur les cuisses d'un occupant et ne jamais passer de ceinture de sécurité sur un enfant étant assis sur les cuisses d'un occupant.**
- **Ne jamais permettre à un enfant de se mettre debout ou de s'agenouiller sur les sièges quand le véhicule est en déplacement.**

**Les femmes enceintes.** Comme tous les occupants du véhicule, une femme enceinte doit utiliser une ceinture de sécurité. Demandez à votre docteur toutes les recommandations particulières à cette situation. La sangle ventrale doit être portée solidement et mise bien à plat, aussi bas que possible en travers du bassin et en-dessous de l'abdomen. Elle ne doit pas être portée sur la taille.

**Personnes avec des incapacités physiques.** Si une incapacité physique ou un état médical empêche quelqu'un de s'asseoir correctement sur le siège avec la ceinture de sécurité correctement attachée, un conseil médical devrait être demandé.

**⚠ AVERTISSEMENT**

**Il est impératif de toujours utiliser une ceinture de sécurité quand le véhicule se déplace. Le fait de ne pas porter de ceinture de sécurité ou d'utiliser une ceinture de sécurité qui n'est pas positionnée correctement augmente le risque à s'exposer à de graves blessures voire à la mort en cas d'arrêt brutal du véhicule ou en cas d'accident. Lire et suivre toutes les directives concernant la ceinture de sécurité.**

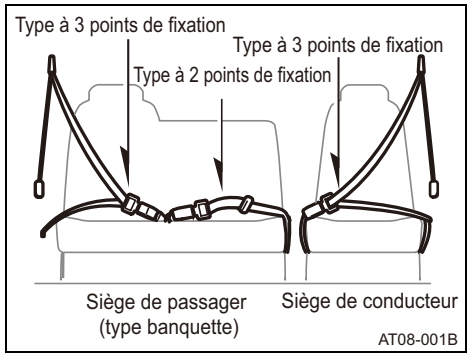


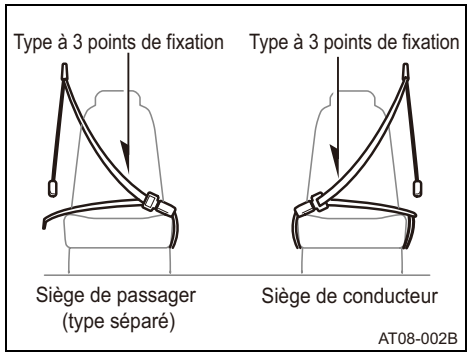


### —Ceintures de sécurité de type à 3 points de fixation

Le siège de conducteur et le siège de passager extérieur sont équipés d'une ceinture de sécurité à trois points de fixation munie d'un enrouleur à verrouillage d'urgence (“ELR”).

- **Avant de rouler, bouclez toujours votre ceinture de sécurité. Dégager lentement la ceinture de sécurité de l'enrouleur et la fixer. Si votre ceinture de sécurité ne se dégage pas de l'enrouleur et ne permet pas d'être bouclée facilement, il se peut qu'elle soit vrillée à l'intérieur du guide de ceinture de sécurité de l'enrouleur en raison de la manière où elle a été rentrée quand elle a été libérée pour la dernière fois. Libérer le vrillage de la ceinture de sécurité et lui permettre d'être lentement récupérée par l'enrouleur. Ensuite, dégager encore une fois et lentement la ceinture de sécurité de l'enrouleur et la fixer.**

- **Si votre ceinture de sécurité est correctement utilisée, elle s'allongera et se contractera librement, suivant les mouvements de votre corps. Les ceintures de sécurité du conducteur et de l'occupant du siège extérieur retiendront les occupants dans leurs sièges et assureront leur protection en cas de freinage, de collision ou de tout autre accident ou de choc. Retenue de passagers par les ceintures de sécurité au véhicule.**

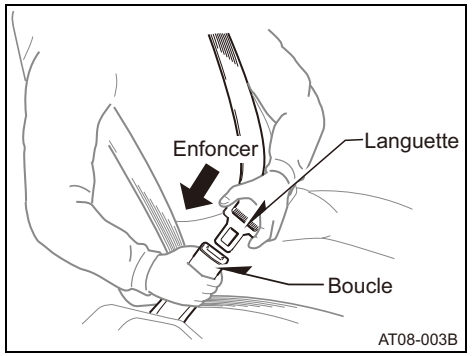


**La longueur de la ceinture de sécurité sera réglable selon votre taille et votre positionnement sur le siège.**

**Régler chaque siège selon les besoins et se tenir bien droit et bien en arrière dans le siège.**

**Retenir la ceinture de sécurité par la languette et la tirer lentement en la faisant passer en travers sur la poitrine et le bassin. Ne jamais vriller la sangle de la ceinture de sécurité. Insérer ensuite la languette dans la boucle.**

**Vous entendrez un son de déclic dès que la languette se verrouillera dans la boucle.**

**Opérer une traction sur la ceinture de sécurité afin de s'assurer quelle est solidement bouclée.**

L'enrouleur reprendra la ceinture de sécurité lors d'un arrêt brutal ou sous l'effet d'un choc. Un mouvement lent et sans heurts permettra à la courroie de s'allonger.

**⚠ AVERTISSEMENT**

- **Après l'insertion de la languette métallique de la plaque de loquet de ceinture de sécurité, s'assurer que la languette métallique et la boucle sont verrouillées et qu'un son de déclic a bien été entendu, mais aussi que les sections de sangle abdominale et de sangle diagonale de la ceinture de sécurité ne sont pas vrillées.**
- **Ne jamais insérer de pièces de monnaie, agrafes, etc. dans la boucle étant donné que ceci peut vous empêcher d'enclencher correctement la languette métallique et la boucle.**
- **Si la ceinture de sécurité ne fonctionne pas correctement, elle ne peut pas protéger les occupants contre le risque de mort ou de blessures graves. Contacter immédiatement tout concessionnaire Hino. Ne pas faire conduire avec le véhicule tant que la ceinture de sécurité n'est pas réparée.**

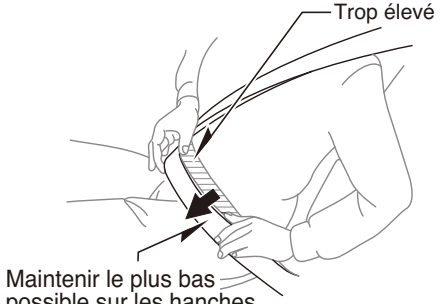


**Ajuster la position des sangles abdominale et diagonale.**

Placer la sangle abdominale le plus bas possible sur vos hanches, puis la régler jusqu'à obtenir un ajustement serré en tirant sur la partie de sangle diagonale et vers le haut.

**⚠ AVERTISSEMENT**

- **Les ceintures de sécurité mal positionnées peuvent entraîner la mort voire provoquer de graves blessures corporelles lors d'un arrêt brutal ou en cas d'accident.**
- **Les ceintures de sécurité mal serrées peuvent causer de graves blessures en permettant à votre corps de se glisser sous la section de sangle abdominale de votre ceinture de sécurité lors d'un arrêt brutal ou en cas d'accident.**
- **Conserver toujours la section de sangle abdominale de votre ceinture de sécurité parfaitement placée aussi bas que possible sur votre bassin. La sangle abdominale ne devrait jamais reposer sur l'abdomen.**
- **La section de sangle diagonale de votre ceinture de sécurité doit être placée sur la partie intermédiaire aux épaules. Elle ne doit jamais être placée en travers du cou ou de la gorge et ne jamais être passée sous votre bras.**

● **Ne jamais libérer la ceinture de sécurité quand le véhicule se déplace.**

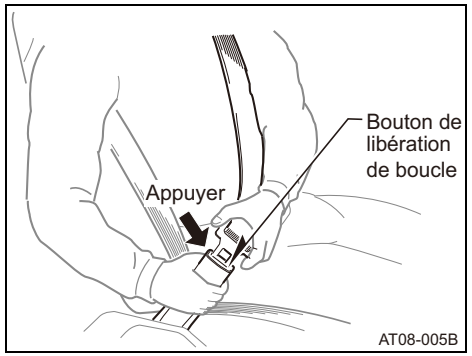


**Pour libérer la ceinture de sécurité, appuyer sur le bouton de libération de boucle et permettre à la ceinture de sécurité de s'enrouler normalement.**

Si la ceinture de sécurité n'est pas entièrement enroulée, la dégager et vérifier si des plis ou des vrillages se sont produits. Ensuite, l'enrouler encore une fois de telle sorte qu'elle puisse rester non vrillée pendant qu'elle est rétractée.

**—Ceintures de sécurité de type à 2 points de fixation (le cas échéant)**

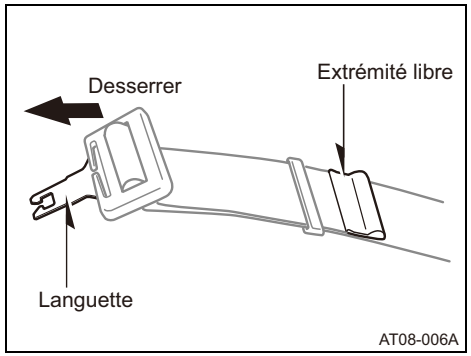


**S'asseoir bien droit et bien en arrière dans le siège. Pour fixer la ceinture de sécurité, insérer la languette dans la boucle.**

Vous entendrez un son de déclic dès que la languette se verrouillera dans la boucle. Si la ceinture de sécurité n'est pas assez longue pour vous, retenir la languette suivant un angle droit sur la ceinture de sécurité et tirer sur la languette.

**⚠ AVERTISSEMENT**

- **Après l'insertion de la languette métallique de la plaque de loquet de ceinture de sécurité dans la boucle, s'assurer que la languette métallique et la boucle sont verrouillées et que la sangle abdominale n'est pas vrillée.**
- **Ne jamais insérer de pièces de monnaie, agrafes, etc. dans la boucle étant donné que ceci peut vous empêcher d'enclencher correctement la languette métallique et la boucle.**
- **Si la ceinture de sécurité ne fonctionne pas correctement, elle ne peut pas protéger les occupants contre le risque de mort ou de blessures graves. Contacter immédiatement tout concessionnaire Hino. Ne pas faire conduire avec le véhicule tant que la ceinture de sécurité n'est pas réparée.**

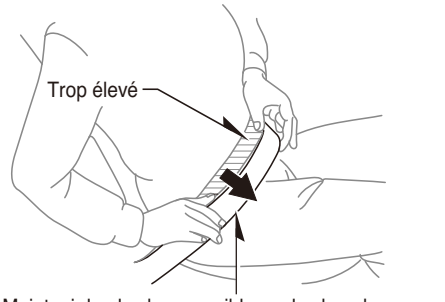


**Tendre la sangle abdominale si elle est trop desserrée.**

Pour tendre la sangle, tirer sur l'extrémité libre de la courroie.

Placer la sangle abdominale le plus bas possible sur votre bassin, puis la régler jusqu'à obtenir un ajustement serré.

**⚠ AVERTISSEMENT**

- **Les ceintures de sécurité mal positionnées peuvent entraîner la mort voire provoquer de graves blessures corporelles lors d'un arrêt brutal ou en cas d'accident.**
- **Une sangle abdominale mal serrée peut causer de graves blessures en permettant à votre corps de se glisser sous la section de la sangle de la ceinture de sécurité lors d'un arrêt brutal ou en cas d'accident.**
- **Conserver toujours la section de sangle abdominale de votre ceinture de sécurité placée le plus bas possible sur votre bassin. La sangle abdominale ne devrait jamais reposer sur l'abdomen.**
- **Ne jamais libérer la ceinture de sécurité quand le véhicule se déplace.**

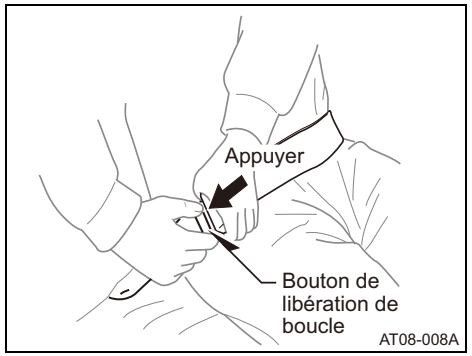


**Pour libérer la ceinture de sécurité, appuyer sur le bouton de libération de boucle.**

H1-A038E01.book　1 ページ　２０１６年１０月１９日　水曜日　午後５時２６分

# SECTION 9

## NOISE CONTROL MAINTENANCE RECORD

Noise control maintenance record ..... 9-2

**Noise control maintenance record**

VEHICLE IDENTIFICATION NO.:_____

| | | |
|---|---|---|
| ☐ High idling speed | ☐ High idling speed | ☐ High idling speed |
| ☐ Cooling fan | ☐ Cooling fan | ☐ Cooling fan |
| ☐ Air intake system hose and clamps | ☐ Air intake system hose and clamps | ☐ Air intake system hose and clamps |
| ☐ Air cleaner element | ☐ Air cleaner element | ☐ Air cleaner element |
| ☐ Exhaust manifold mounting nuts tightness | ☐ Exhaust manifold mounting nuts tightness | ☐ Exhaust manifold mounting nuts tightness |
| ☐ Muffler with catalyst and exhaust pipe clamps | ☐ Muffler with catalyst and exhaust pipe clamps | ☐ Muffler with catalyst and exhaust pipe clamps |
| ☐ Splash shields and under hood insulator | ☐ Splash shields and under hood insulator | ☐ Splash shields and under hood insulator |
| MILES _____ | MILES _____ | MILES _____ |
| KM _____ | KM _____ | KM _____ |
| MONTHS _____ | MONTHS _____ | MONTHS _____ |
| DATE _____ | DATE _____ | DATE _____ |
| Performed by: | Performed by: | Performed by: |
| Signature _____ | Signature _____ | Signature _____ |
| Dealer _____ | Dealer _____ | Dealer _____ |

☐ High idling speed
☐ Cooling fan
☐ Air intake system hose and clamps
☐ Air cleaner element
☐ Exhaust manifold mounting nuts tightness
☐ Muffler with catalyst and exhaust pipe clamps
☐ Splash shields and under hood insulator

MILES _____
KM _____
MONTHS _____
DATE _____

Performed by:
Signature _____
Dealer _____

☐ High idling speed
☐ Cooling fan
☐ Air intake system hose and clamps
☐ Air cleaner element
☐ Exhaust manifold mounting nuts tightness
☐ Muffler with catalyst and exhaust pipe clamps
☐ Splash shields and under hood insulator

MILES _____
KM _____
MONTHS _____
DATE _____

Performed by:
Signature _____
Dealer _____

☐ High idling speed
☐ Cooling fan
☐ Air intake system hose and clamps
☐ Air cleaner element
☐ Exhaust manifold mounting nuts tightness
☐ Muffler with catalyst and exhaust pipe clamps
☐ Splash shields and under hood insulator

MILES _____
KM _____
MONTHS _____
DATE _____

Performed by:
Signature _____
Dealer _____

| | | |
|---|---|---|
| ☐ High idling speed | ☐ High idling speed | ☐ High idling speed |
| ☐ Cooling fan | ☐ Cooling fan | ☐ Cooling fan |
| ☐ Air intake system hose and clamps | ☐ Air intake system hose and clamps | ☐ Air intake system hose and clamps |
| ☐ Air cleaner element | ☐ Air cleaner element | ☐ Air cleaner element |
| ☐ Exhaust manifold mounting nuts tightness | ☐ Exhaust manifold mounting nuts tightness | ☐ Exhaust manifold mounting nuts tightness |
| ☐ Muffler with catalyst and exhaust pipe clamps | ☐ Muffler with catalyst and exhaust pipe clamps | ☐ Muffler with catalyst and exhaust pipe clamps |
| ☐ Splash shields and under hood insulator | ☐ Splash shields and under hood insulator | ☐ Splash shields and under hood insulator |
| MILES _____ | MILES _____ | MILES _____ |
| KM _____ | KM _____ | KM _____ |
| MONTHS _____ | MONTHS _____ | MONTHS _____ |
| DATE _____ | DATE _____ | DATE _____ |
| Performed by: | Performed by: | Performed by: |
| Signature _____ | Signature _____ | Signature _____ |
| Dealer _____ | Dealer _____ | Dealer _____ |

A-10.fm 1 ページ ２０１６年１０月２６日 水曜日 午前１１時３８分

# SECTION 10

## INDEX

A-10.fm 2 ページ ２０１６年１０月２６日 水曜日 午前１１時３８分


**A**

ABS warning light . . . . . 2-4, 2-70, 6-27
Accelerator pedal . . . . . 2-113,6-32
Adjustment
  Driver's seat . . . . . 2-26
  Seat belt . . . . . 2-29
After driving . . . . . 3-47
After starting the engine . . . . . 6-25
Air bleeding . . . . . 6-62
Air brake pressure warning light . . 2-4, 2-69
Air cleaner maintenance . . . . . 6-11
Air conditioning system . . . . . 2-227
  Air flow selector settings . . . . . 2-231
  Controls . . . . . 2-228
  Operating tips . . . . . 2-231
  Side vents . . . . . 2-234
Air dryer . . . . . 3-48
Air horn . . . . . 3-46
Air intake system . . . . . 6-77
Air pressure gauge . . . . . 2-3, 2-65, 6-30
Air suspension dump switch . . . . . 3-6
Air tank . . . . . 3-48
Ashtray . . . . . 2-239
Audio system . . . . . 2-117
  Clock . . . . . 2-123
  FM-AM radio/compact disc player . 2-120
  Radio antenna . . . . . 2-119
  Reference . . . . . 2-118
  Some basics . . . . . 2-118
  Using your audio system . . . . . 2-118
Automatic transmission . . . . . 2-80
  Automatic transmission oil temperature warning message . . . 2-107
  Automatic transmission warning message . . . . . 2-106
  Change automatic transmission fluid and oil filter element . . . . . 6-136
  Driving mode selection switch . . . . . 2-84
  Starting the vehicle under normal driving conditions . . . . . 2-86

**B**

Battery . . . . . 6-78
  Battery charging circuit warning light . . . . . 2-4, 2-71
  Battery disconnect switch bracket . . . 4-6
  Handling in cold weather . . . . . 3-10
  Starting the engine after prolonged period . . . . . 3-49
Beam control switch . . . . . 2-57
Before driving the vehicle . . . . . 3-14
Before starting the vehicle . . . . . 3-8
Brake
  Brake pedal . . . . . 2-113, 6-32
  Brake pressure warning light . . 2-4, 2-69
Break-in . . . . . 3-3

**C**

Cab light switch . . . . . 2-59
CALIFORNIA Proposition 65 Warning . . . iv
Center console and cup holder . . . . . 2-240
Child restraints . . . . . 2-36
Cigarette lighter . . . . . 2-239
Clean air act . . . . . 6-39
Clean engine idle certification label for California . . . . . iv
Cleaning
  Cleaning the interior of the cab . . . . . 5-2
  Washing and waxing the vehicle . . . . 5-4
Clock . . . . . 2-123
Clutch pedal . . . . . 2-114, 6-32
Compact disc player, FM-AM radio . . 2-120
Coolant level warning message . . . . . 2-105
Coolant (water) temperature gauge, Engine . . . . . 2-64, 2-94
Cooling system . . . . . 6-58
  Replace cooling system . . . . . 6-173
Corrosion protection . . . . . 5-6
Cruise control . . . . . 3-41
  How to set the cruise control . . . . . 3-42
  Main switch . . . . . 3-42
  Set button . . . . . 3-43
Cup holder . . . . . 2-241

A-10.fm 3 ページ ２０１６年１０月２６日 水曜日 午前１１時３８分

## D


Daily inspection . . . . . 6-1
Damaged tire . . . . . 4-7
DEF-SCR system . . . . . 3-20
Breather hose . . . . . 3-26
DEF level warning . . . . . 3-29
DEF quality warning . . . . . 3-30
DEF quality re-warning . . . . . 3-31
Gauge, DEF . . . . . 3-26
Gauge and indicator for DEF-SCR system . . . . . 3-28
How to check and clean the breather hose . . . . . 3-26
How to check the DEF level . . . . . 3-26
Precautions, DEF-SCR system . . . . 3-21
Warning for DEF maintenance requirement . . . . 3-32
Warning of malfunction of DEF-SCR system . . 3-33
Warning of malfunction of DEF-SCR system when the malfunction is detected again within 40 operating hours after changing DEF or mending the DEF-SCR system for the warning of malfunction of DEF-SCR system for the first time . . . . . 3-34
Diesel fuel . . . . . 1-16, 6-60
Diesel fuel requirements . . . . . 6-60
Differential lock . . . . . 3-40
How to operate the differential lock switch . . . . . 3-40
Doors . . . . . 2-10
Door pocket . . . . . 2-242
Locking and unlocking the doors . . . . 2-11
Opening and closing the doors . . . . 2-10
DPR . . . . . 3-35
DPR manual regeneration requirement . . . . . 3-38
Indicator light, DPR . . . . . 2-75
Manual regeneration . . . . . 3-37
Manual regeneration switch, DPR . . 3-37
Drive belts . . . . . 6-7
Driver's seat . . . . . 2-26
Seat adjustment precautions . . . . . 2-26
Adjusting driver's seat . . . . . 2-27
Driving . . . . . 3-14
Driving mode selection switch . . . . . 2-84
Driving through a flooded area . . . . . 3-18


## E


Economy running switch . . . . . 3-41
Electric system . . . . . 6-78
Emergency
Emergency starting . . . . . 4-2
Engine Overheating . . . . . 4-13
Using your hazard warning lights . . . 4-2
Towing . . . . . 4-11
Engine block heater . . . . . 3-11
Engine coolant (water) temperature gauge . . . . . 2-64
Engine hood . . . . . 2-21
Engine overrunning . . . . . 3-18
Engine shutdown . . . . . 2-104
Exhaust brake indicator light . . . . 2-4, 2-75
Exhaust brake switch . . . . . 2-114
Exterior cleaning . . . . . 5-4


## F


Freeing the vehicle . . . . . 4-13
Front axle alignment . . . . . 6-89
Fuel filter . . . . . 6-13
Fuel filter warning message . . . . . 2-110
Fuel gauge . . . . . 2-63
Fuel system . . . . . 6-60
Replace fuel filter . . . . . 6-142,6-159
Drain water . . . . . 6-145
Fuses . . . . . 6-79
Fusible links . . . . . 6-83


## G


General introduction . . . . . 1-1
General precautions . . . . . 6-41
Gross Vehicle Weight Rating (GVWR) and Gross Axle capacity Weight Rating (GAWR) . . . . . 1-4

A-10.fm 4 ページ ２０１６年１０月２６日 水曜日 午前１１時３８分

## H


Handling in cold weather . . . . . 3-10
Hazard light switch . . . . . 2-58
Hazard warning lights . . . . . 4-2
Headlights and turn signals . . . . . 2-56
  Beam control switch . . . . . 2-57
  Turn signal switch . . . . . 2-57
Headlight high beam indicator light . . . . . 2-4, 2-75
Hood, engine . . . . . 2-21
Horn . . . . . 3-46
  Horn, air . . . . . 3-46
  Horn, electric . . . . . 3-46
How to load cargo . . . . . 3-3
How to start the engine . . . . . 3-8
How to release the parking brake manually . . . . . 4-15


## I


If a warning light comes on... . . . . 4-2
If your vehicle needs to be towed . . . . . 4-11
If the engine overheats . . . . . 4-13
Important symbols and signs . . . . . i
In an emergency . . . . . 4-1
Indicator lights . . . . . 2-4, 2-73
Information display . . . . . 2-87
  Information display control switch . . 2-88
Installation of a battery disconnect switch . . . . . 4-6
Installing tire and wheel . . . . . 4-9
Instrument cluster overview . . . . . 2-3
Instrument panel overview . . . . . 2-2


## J


Jack-up the vehicle . . . . . 4-8
Jump starting (emergency starting) . . . 4-2


## K


Keyless entry system . . . . . 2-12
  Replacing battery . . . . . 2-14
Keys . . . . . 2-10


## L


Light
  Cab light switch . . . . . 2-59
  Hazard light switch . . . . . 2-58
  Hazard warning lights . . . . . 4-2
  Headlights and turn signals . . . . . 2-56
  Light bulb . . . . . 6-121
  Rheostat light control switch . . . . . 2-58
  Turn signal switch . . . . . 2-57
  Van light switch . . . . . 2-60
Loosening wheel nuts . . . . . 4-7
Low fuel level warning message . . . . 2-110
Lubrication . . . . . 6-63
  Differential gear oil . . . . . 6-75
  Engine oil and oil filters . . . . . 6-63
  Front axle . . . . . 6-74
  Transmission lubrication . . . . . 6-68
Lubrication chart . . . . . 6-113

A-10.fm 5 ページ ２０１６年１０月２６日 水曜日 午前１１時３８分


**M**

Maintenance . . . . . 1-15, 6-1, 6-37, 6-123
- After starting the engine . . . . . 6-25
- Before starting the engine . . . . . 3-8
- Daily inspection . . . . . 6-1
- Handling in cold weather . . . . . 3-10
- Periodic maintenance . . . . . 6-37, 6-41
- Starting the engine . . . . . 6-25

Maintenance procedure . . . . . 6-3
Maintenance service . . . . . 1-15
Malfunction indicator light . . . . . 2-4
Manual transmission . . . . . 2-79
- Operation of manual transmission . . 3-15
- Replace manual transmission gear oil . . . . 6-127
- Shift pattern . . . . . 2-79

Mirrors, outside rear view . . . . . 2-51
- Mirror heater switch . . . . . 2-53
- Rear view mirror control switch . . . . 2-52

**N**

New vehicle break-in . . . . . 3-3
Noise control maintenance record . . . . . 9-2
Noise emission control . . . . . 6-56

**O**

Odometer . . . . . 2-62
Oil filter, engine . . . . . 6-65
Oil pressure warning message, engine . . . . . 2-106
Operation of manual transmission . . . 3-15
Outside rear view mirrors . . . . . 2-51
Overhead console . . . . . 2-240
Overloading . . . . . 1-14

**P**

Painting . . . . . 1-16
Parking brake
- How to release the parking brake manually . . . . . 4-15
- Parking brake control knob . . . . . 2-116
- Parking brake lever . . . . . 2-115
- Parking brake warning light . . . . 2-4, 2-69

Pedals . . . . . 2-113
- Accelerator pedal . . . . . 2-113, 6-32
- Brake pedal . . . . . 2-113, 6-32
- Clutch pedal . . . . . 2-114, 6-32

Periodic maintenance . . . . . 6-37, 6-41
Power outlet . . . . . 2-236
Power steering system . . . . . 6-90
Power windows . . . . . 2-19
Pre-heater indicator light . . . . . 2-4, 2-75
Protection against theft . . . . . 2-21

**R**

Radiator cooling fan and rated speed of the engine . . . . . 6-59
Radiator grille cover . . . . . 3-12
Radio antenna . . . . . 2-119
Rear view mirror control switch . . . . . 2-52
Recommended maintenance service . . . . . 6-43
Regular replacement of coolant . . . . . 6-58
Reporting safety defects . . . . . 7-2
Rheostat light control switch . . . . . 2-58

**S**

Safety labels . . . . . vi
Scope of regular maintenance . . . . . 6-2
Seat belts . . . . . 2-29
- Child restraints . . . . . 2-36
- Installation of child restraint system . 2-38
- Installation procedure . . . . . 2-39
- Removal of child restraint systems . . 2-48
- 2-point type . . . . . 2-34
- 3 point type seat belts . . . . . 2-31

Seat belt instructions for Canadian owners (in French) . . . . . 8-2
Seats . . . . . 2-26
- Driver's seats . . . . . 2-26
- Adjusting driver's seat . . . . . 2-27
- Seat adjustment precautions . . . . . 2-26

Service assistance . . . . . iii, 1-15
Service brake system . . . . . 6-85

A-10.fm 6 ページ ２０１６年１０月２６日 水曜日 午前１１時３８分

Side vents . . . . . 2-234
Speed limiter device . . . . . 1-14
Speedometer and odometer . . . . . 2-62
Starter switch . . . . . 2-78
Starting the engine . . . . . 6-25
Starting the engine after long vehicle storage . . . . . 3-49
Steering . . . . . 3-18
  Power steering fluid level . . . . . 6-6
  Power steering system . . . . . 6-90
  Steering lock . . . . . 2-78
  Steering wheel . . . . . 2-49
Stopping the engine . . . . . 3-47
Sun visor . . . . . 2-242
Suspension . . . . . 6-17

## T

Tables
  Bolt tightening torque chart (for general purpose) . . . . . 6-100
  Light bulb replacement . . . . . 6-121
  Lubricants capacity . . . . . 6-102
  Lubrication chart . . . . . 6-113
  Pressure . . . . . 6-104
  Recommended lubrication . . . . . 6-105
  Recommended maintenance service 6-43
  Requirements of biodiesel fuel usage 6-109
  Standard adjustment dimensions . . . 6-91
  Tightening torque . . . . . 6-94
Tachometer . . . . . 2-62
Tampering with the noise control system is prohibited . . . . . 6-56
Tire . . . . . 6-88
  Damaged tire . . . . . 4-7
  Installing the wheel . . . . . 4-9
  Jack-up the vehicle . . . . . 4-8
  Loosening wheel nuts . . . . . 4-7
  Tire check . . . . . 4-7
  Tire inflation pressure . . . . . 6-88
Towing . . . . . 4-11
Trip meter . . . . . 2-93
Turn signals, headlights and . . . . . 2-56
  Turn signal indicator lights . . . . 2-4, 2-75
  Turn signal switch . . . . . 2-57

## U

Using your hazard warning lights . . . . . 4-2

## V

Van light switch . . . . . 2-60
Vehicle identification number . . . . . 1-2
  Vehicle Identification Number (VIN) structure . . . . . 1-3

## W

Warning and caution labels . . . . . iv
Warning and indicator display . . . . . 2-103
Warning light and indicator light . . . . 2-4, 2-7, 2-66, 2-73
Warm up system . . . . . 3-9
Washing and waxing the vehicle . . . . . 5-4
Wheel and tire balancing . . . . . 6-88
Wheel nuts and bolts . . . . . 6-86
  Loosening wheel nuts . . . . . 4-7
  Wheel nut . . . . . 6-125
Wheel replacement recommendations . . . . . 6-89
When the vehicle gets stuck in loose sand, ice or snow; freeing the vehicle . . . . . 4-13
Windows . . . . . 2-19
  Lock switch, window . . . . . 2-20
  Power windows . . . . . 2-19
  Regulator handle, window . . . . . 2-21
Windshield washer . . . . . 6-22
Windshield wiper and washer switch . . 2-59

Back Cover.fm 1 ページ ２０１６年１０月２６日 水曜日 午前１１時８分

**© 2016 Hino Motors, Ltd.**

All rights reserved. This manual may not be reproduced or copied in whole or in part, without the written permission of Hino Motors, Ltd.

PRINTED IN JAPAN
Pub. No. H1-A038E01 Nov. 2016
Part No. 01999-E0155

H1-A038E01.book 2 ページ ２０１６年１０月１９日 水曜日 午後５時２６分

**Quick index**


- If a warning light comes on or warning screen appears . . . . . 2-66, 2-103
- If your vehicle overheats . . . . . 4-13
- If your vehicle needs to be towed . . . . . 4-11
- Tips for driving during break-in period . . . . . 3-3
- How to start the engine . . . . . 3-8
- Complete index . . . . . 10-1


**Gas station information**


- **Fuel type:** Diesel fuel, cetane number 45 or higher . . . . . 6-60


Use ultra low sulfur diesel fuel
(Sulfur content: Less than 15 ppm (0.0015%) by weight)
only and low-ash fuel must be less than 1% in weight.

Be sure to contact your Hino dealer and follow the dealer's instructions regarding the use of biodiesel fuel before you use the biodiesel fuel with your vehicle.


- **Recommended engine oil:** . . . . . 6-63
- **Tire information:** . . . . . 6-88

MENU

# FOREWORD

This workshop manual has been prepared to provide information regarding repair procedures on Hino Trucks.

Applicable for HINO 238, 258LP, 268, 338, 358 series, equipped with J08E-VB and J08E-WU engine

When making any repairs on your vehicle, be careful not to be injured through improper procedures.
As for maintenance items, refer to the Driver's / Owner's Manual.
All information and specifications in this manual are based upon the latest product information available at the time of printing.
Hino Motors Sales U.S.A., Inc. reserves the right to make changes at any time without prior notice.

Please note that the publications below have also been prepared as relevant workshop manuals for the components and systems in these vehicles.

| Manual Name | Pub. No. |
|---|---|
| Chassis Workshop Manual | S1-UNAE14A 1/2<br>S1-UNAE14A 2/2 |
| J08E-VB, WU Engine Workshop Manual | S5-UJ08E14A |
| Trouble Shooting Workshop Manual | S7-UNAE14A 1/3<br>S7-UNAE14A 2/3 |

**Hino Motors Sales U.S.A. , Inc.**

# CHAPTER REFERENCES REGARDING THIS WORKSHOP MANUAL

Use this chart to the appropriate chapter numbers for servicing your particular vehicle.

| CHAPTER | | | |
|---|---|---|---|
| | MANUAL No. | S7-UNAE14A 3/3 (U.S.A.), S7-CNAE14A 3/3 (CANADA) | |
| | MODELS | HINO 238, 258LP, 268, 338, 358 | |
| | Production Code | NE8J, NF8J, NJ8J, NV8J, NH8J | |
| GENERAL INTRODUCTION | | 1-001 | |
| TROUBLE SHOOTING - COMPONENTS | | 2-001 | |
| TROUBLE SHOOTING - ELECTRICAL CONTROL SYSTEM | | 3-001 | |
| ENGINE CONTROL SYSTEM (J08E) | | 4-001 | |
| DEF SCR SYSTEM (DCU) | | 5-001 | |
| BRAKE CONTROL SYSTEM | | 9-001 (ABS:HYDRAULIC (E VERSION)) | 9-002 (ABS:FULL AIR) |
| VEHICLE CONTROL SYSTEM (VCS) | | 11-001 | |
| CAN COMMUNICATION | | 12-001 | |

This manual does not contain items on half-tone dot meshing.

HINO

# WORKSHOP MANUAL

INDEX: TROUBLE SHOOTING


GENERAL INTRODUCTION

TROUBLE SHOOTING - COMPONENTS

TROUBLE SHOOTING - ELECTRICAL CONTROL SYSTEM

ENGINE CONTROL SYSTEM (J08E)

DEF SCR SYSTEM (DCU)

BRAKE CONTROL SYSTEM

VEHICLE CONTROL SYSTEM (VCS)

CAN COMMUNICATION

# DEF SCR SYSTEM (DCU)

5-001

**DEF SCR SYSTEM .....5-2**
PRECAUTIONS FOR DIAGNOSIS.....5-2
SYSTEM BLOCK DIAGRAM.....5-4
SYSTEM DIAGRAM.....5-5
SENSOR LOCATION.....5-6
COMPUTER (DCU) WIRE HARNESS CONNECTOR PIN ASSIGNMENT .....5-9
SIGNAL CHECK HARNESS.....5-10
INSPECTION .....5-10
MALFUNCTION INDICATOR LIGHT ILLUMINATION PATTERN .....5-11
DIAGNOSIS USING THE PC DIAGNOSIS TOOL.....5-12
DIAGNOSTIC TROUBLE CODE (DTC) TABLE .....5-13
DTC: P0071 .....5-19
DTC: P0072 .....5-30
DTC: P0073 .....5-38
DTC: P0562 .....5-46
DTC: P0563 .....5-49
DTC: P060B.....5-52
DTC: P060C.....5-54
DTC: P062F .....5-56
DTC: P0667 .....5-58
DTC: P068A.....5-60
DTC: P06AD .....5-65
DTC: P06AE.....5-67
DTC: P142A.....5-69
DTC: P142B.....5-78
DTC: P14C1.....5-88
DTC: P14C2.....5-101
DTC: P14C3.....5-106
DTC: P202E.....5-112
DTC: P203C.....5-116
DTC: P203D.....5-119
DTC: P2044 .....5-122
DTC: P2045 .....5-125
DTC: P2047 .....5-128
DTC: P2048 .....5-132
DTC: P2049 .....5-137
DTC: P204B.....5-143
DTC: P204C.....5-146
DTC: P204D.....5-152
DTC: P205B.....5-158
DTC: P205C.....5-167
DTC: P205D.....5-170
DTC: P206C.....5-173
DTC: P206D.....5-176
DTC: P208A.....5-179
DTC: P208B.....5-183
DTC: P208C.....5-186
DTC: P208D.....5-190
DTC: P20A0.....5-194
DTC: P20A1.....5-200
DTC: P20A2.....5-204
DTC: P20A3.....5-210
DTC: P20B1.....5-216
DTC: P20B2.....5-221
DTC: P20B3.....5-229
DTC: P20B4.....5-234
DTC: P20BD, P20B9 and P20C1 .....5-239
DTC: P20C0, P20BC and P20C4 .....5-247
DTC: P20E8.....5-253
DTC: P20E9.....5-264
DTC: P20F4 .....5-269
DTC: P21C2.....5-273
DTC: P21C3.....5-278
DTC: P21C4.....5-282
DTC: P2201 .....5-286
DTC: P2202 .....5-290
DTC: P2203 .....5-293
DTC: P2204 .....5-296
DTC: P2209 .....5-303
DTC: P229F .....5-310
DTC: P22A0.....5-314
DTC: P22A1.....5-317
DTC: P22A2.....5-320
DTC: P22A7.....5-328
DTC: P2510 .....5-336
DTC: P2BAE .....5-341
DTC: U0029.....5-344
DTC: U0038.....5-347
DTC: U0100.....5-350
DTC: U029D.....5-354
DTC: U029E.....5-357
DTC: U02A2.....5-360

# DEF SCR SYSTEM

## PRECAUTIONS FOR DIAGNOSIS

EN01H16F02040F03001001

- Ensure that individual connectors are certainly connected before start of checking works.
- Make sure to set the starter switch to the "LOCK" position before disconnecting a connector.
- Replace the part or the component that have a failure or trouble. Do not fix and reuse it.
- Delete the past malfunction code after recording. Then conduct a diagnosis again to check for present failures.
- Delete the past failure memory after completion of a diagnostic analysis.

## 1. ILLUSTRATION OF CONNECTOR AND MEASUREMENT ON TERMINAL

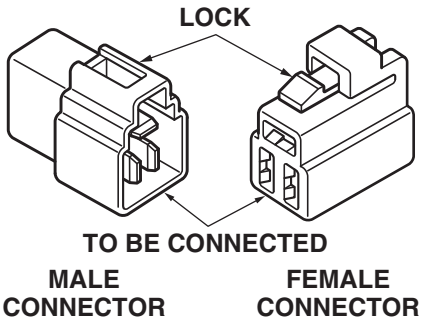


### ILLUSTRATION OF CONNECTOR

**The illustration of a connector contained in this document represents an image of a connector with its lock positioned on top as viewed from the connecting face.**

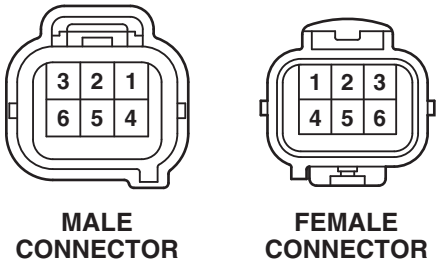


### NUMBERING OF CONNECTOR TERMINALS

**The terminals are symmetrically numbered (symmetrically reversed numbering) as viewed on the connecting faces of a pair of connectors.**
**The terminal #1 is located at the top right corner of a male connector and at the top left corner of a female connector respectively in this document.**

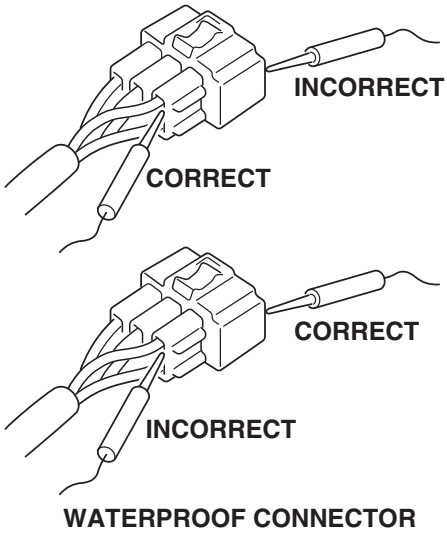


### PRECAUTIONS FOR TERMINAL MEASUREMENT

**Unless otherwise specified in this document, the illustration of a connector represents an image of a connector as viewed from the connecting face. A test probe must access the back face of a connector.**
**However, some types of connector do not allow a test probe to contact with the back face such as a waterproof connector. In such case, a test probe may be allowed to access the front face of a connector but a special care must be used to avoid a risk of damage in terminals.**

**As to a connector that is designed to use the signal check harness for terminal measurement, do not place a test probe directly onto the front or back face. Use a contact box of the connected signal check harness to take measurement on terminals.**

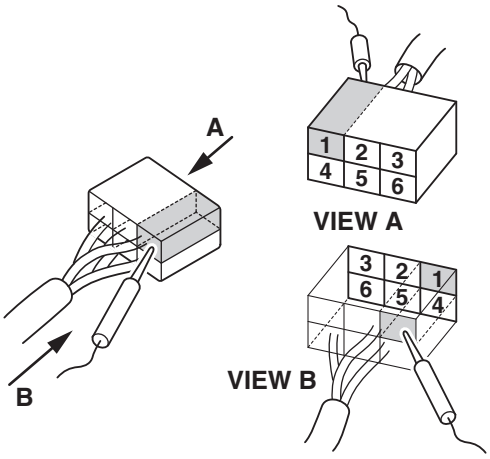


### ILLUSTRATION OF CONNECTOR AND MEASUREMENT SURFACE

**The illustration of a connector contained in this document represents an image of a connector as viewed from the connecting face. For example, the terminal #1 of a female connector is located at the top left corner of a connector as viewed from the connecting face.**
**In actual measurement on the terminal #1 of a female connector, a test probe must be placed onto the top right corner on the back face of a connector.**

SAPH16F020400001

# SYSTEM BLOCK DIAGRAM

EN01H16F02040F03001002

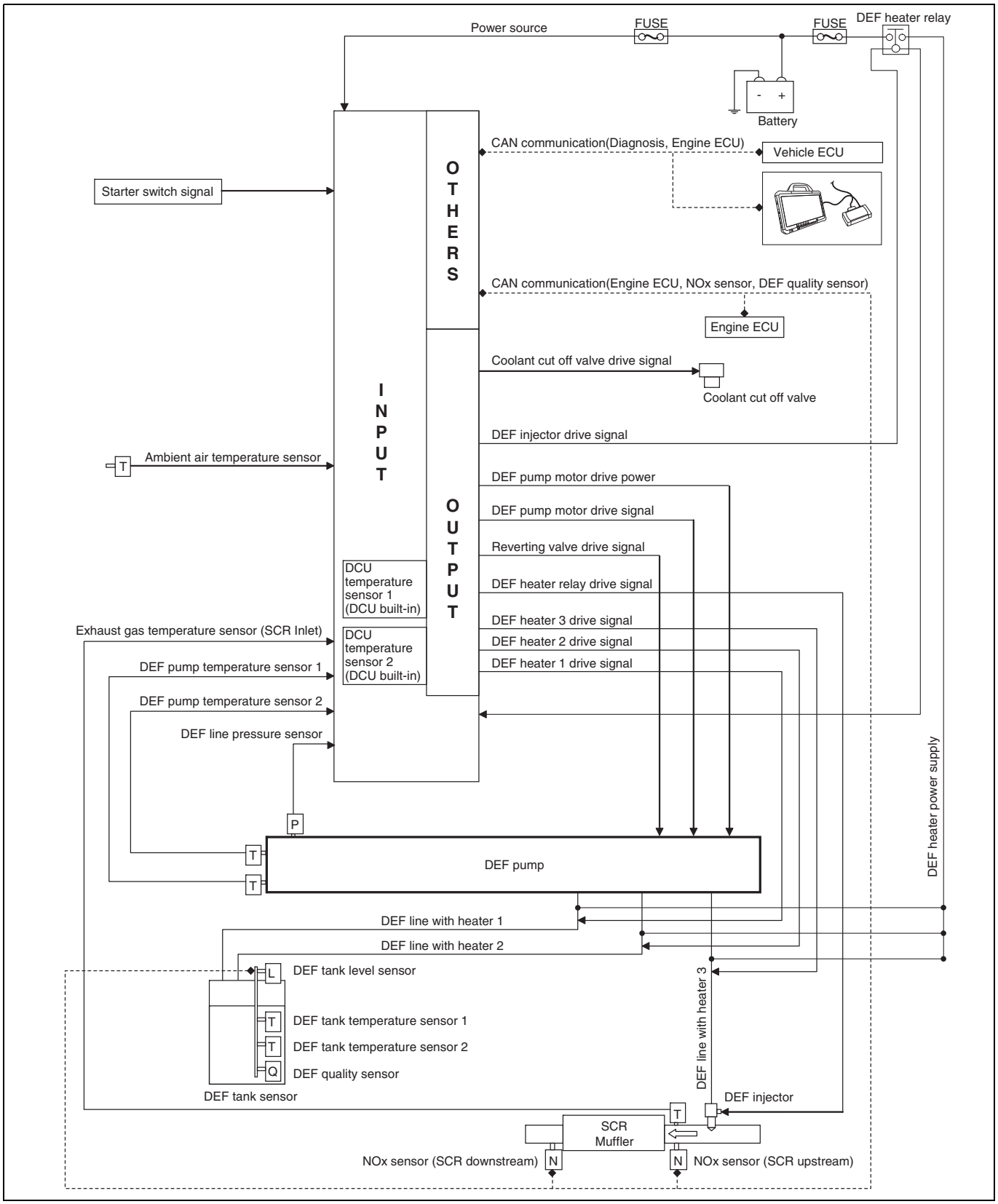


SAPH16F020400002

# SYSTEM DIAGRAM

EN01H16F02040F03001003

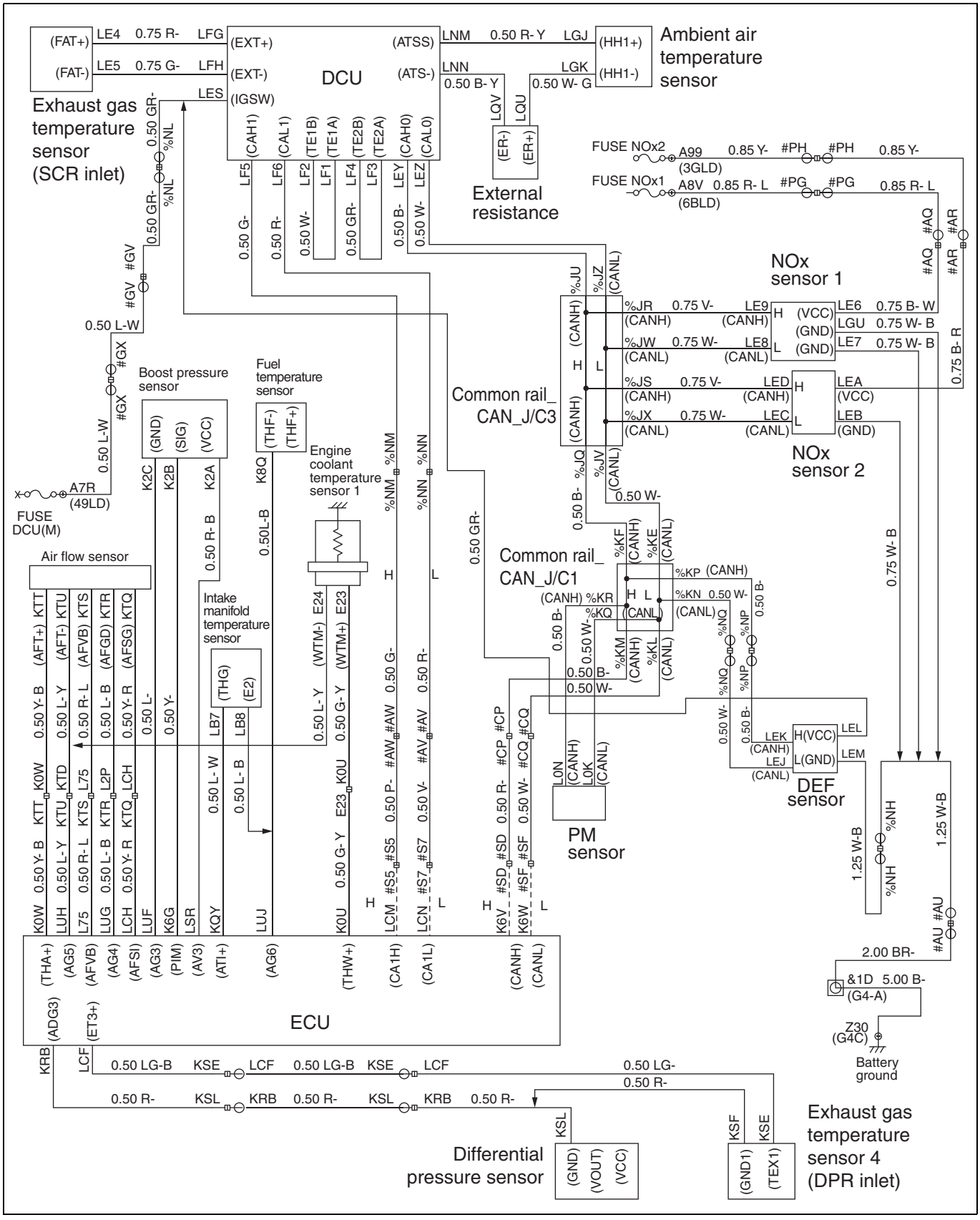


SAPH16F020400003

# SENSOR LOCATION

EN01H16F02040F03001004

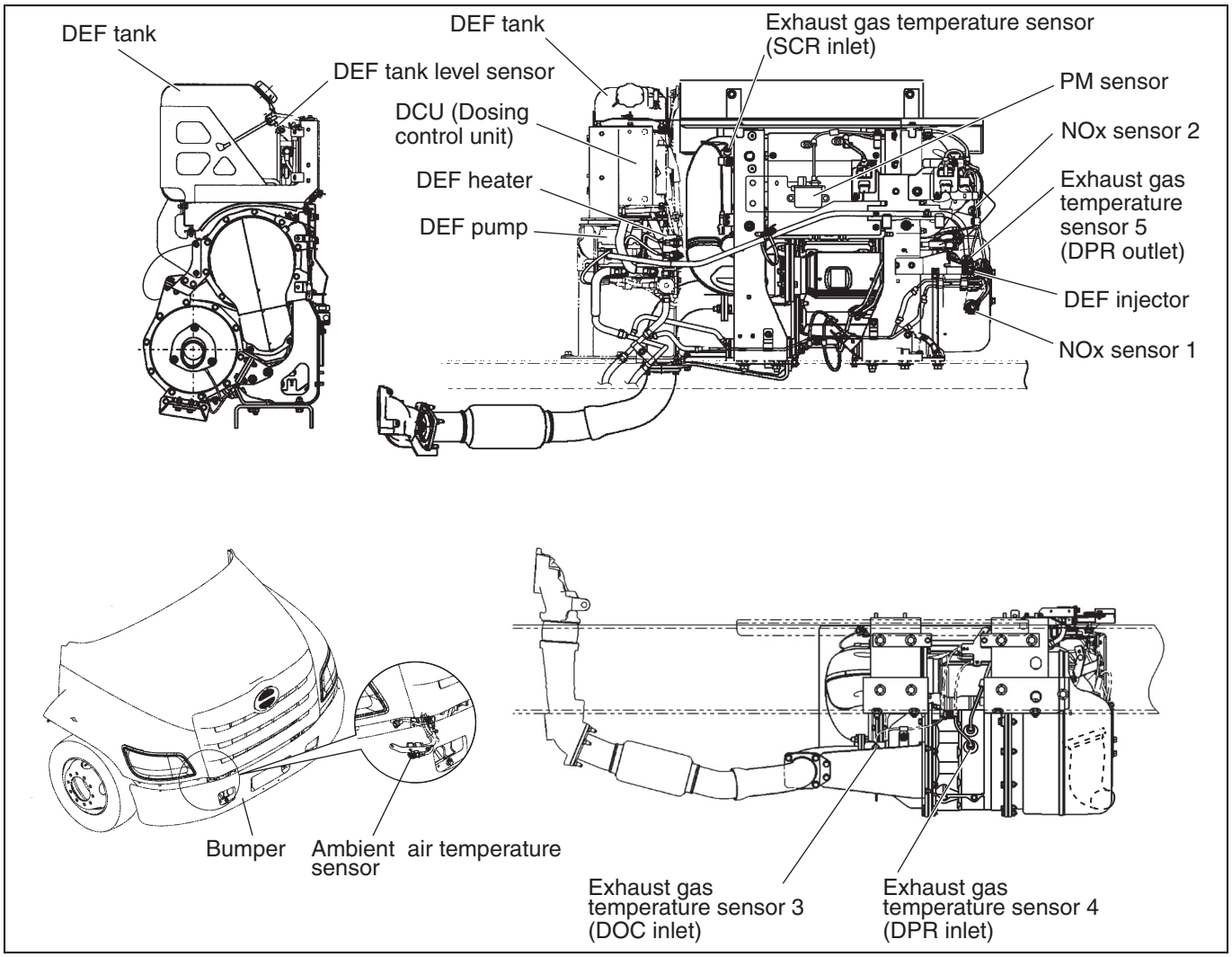


SAPH16F020400004

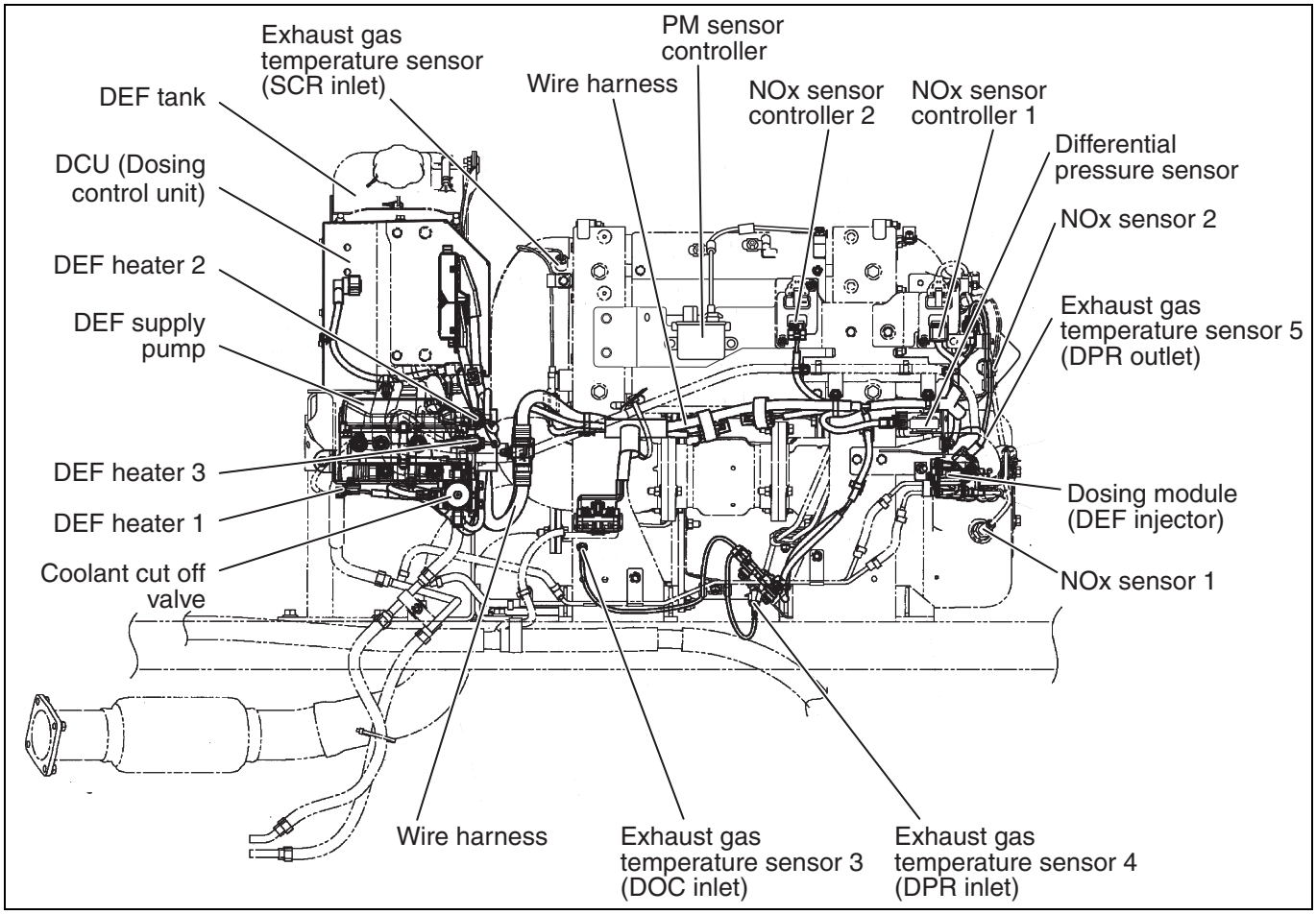


SAPH16F020400005

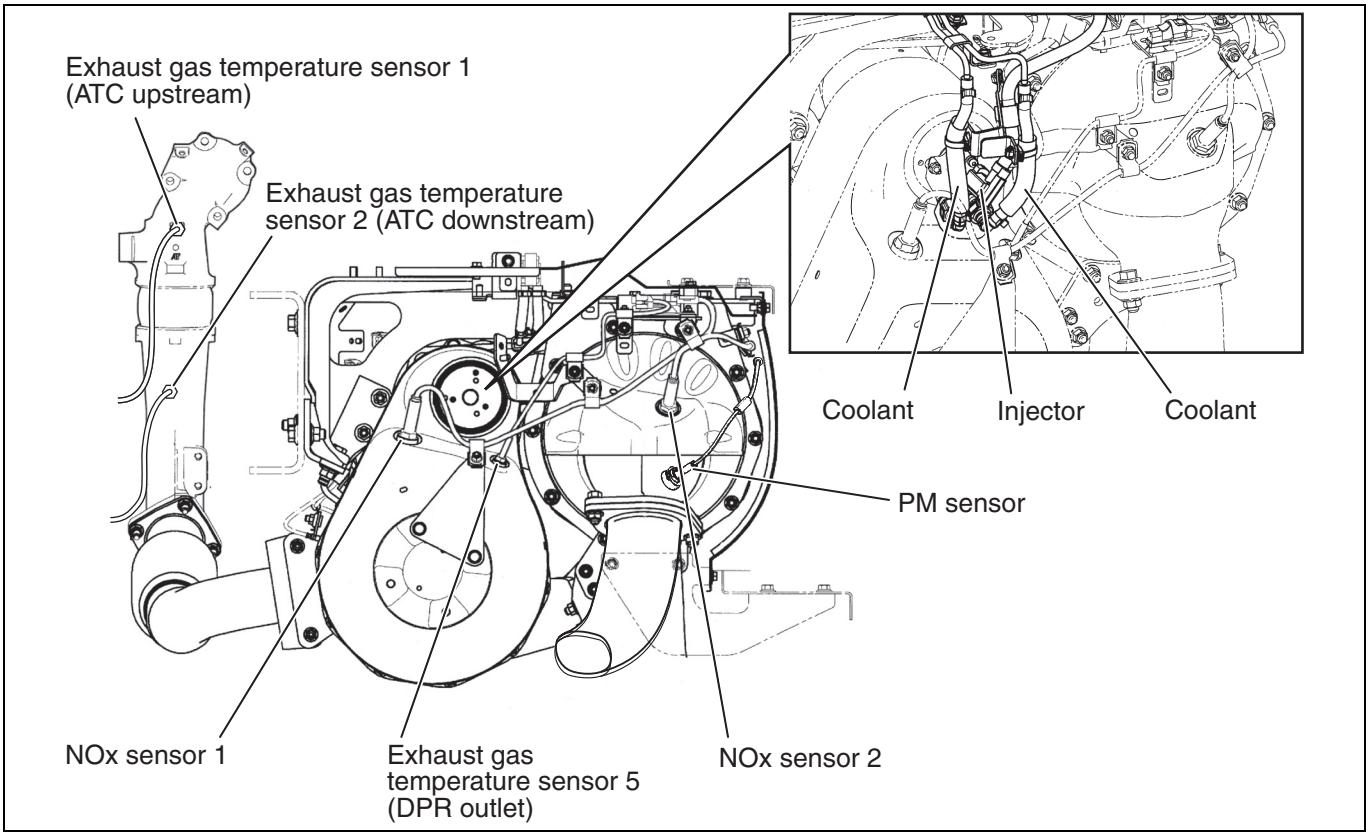


SAPH16F020400006

# COMPUTER (DCU) WIRE HARNESS CONNECTOR PIN ASSIGNMENT

EN01H16F02040F03001005

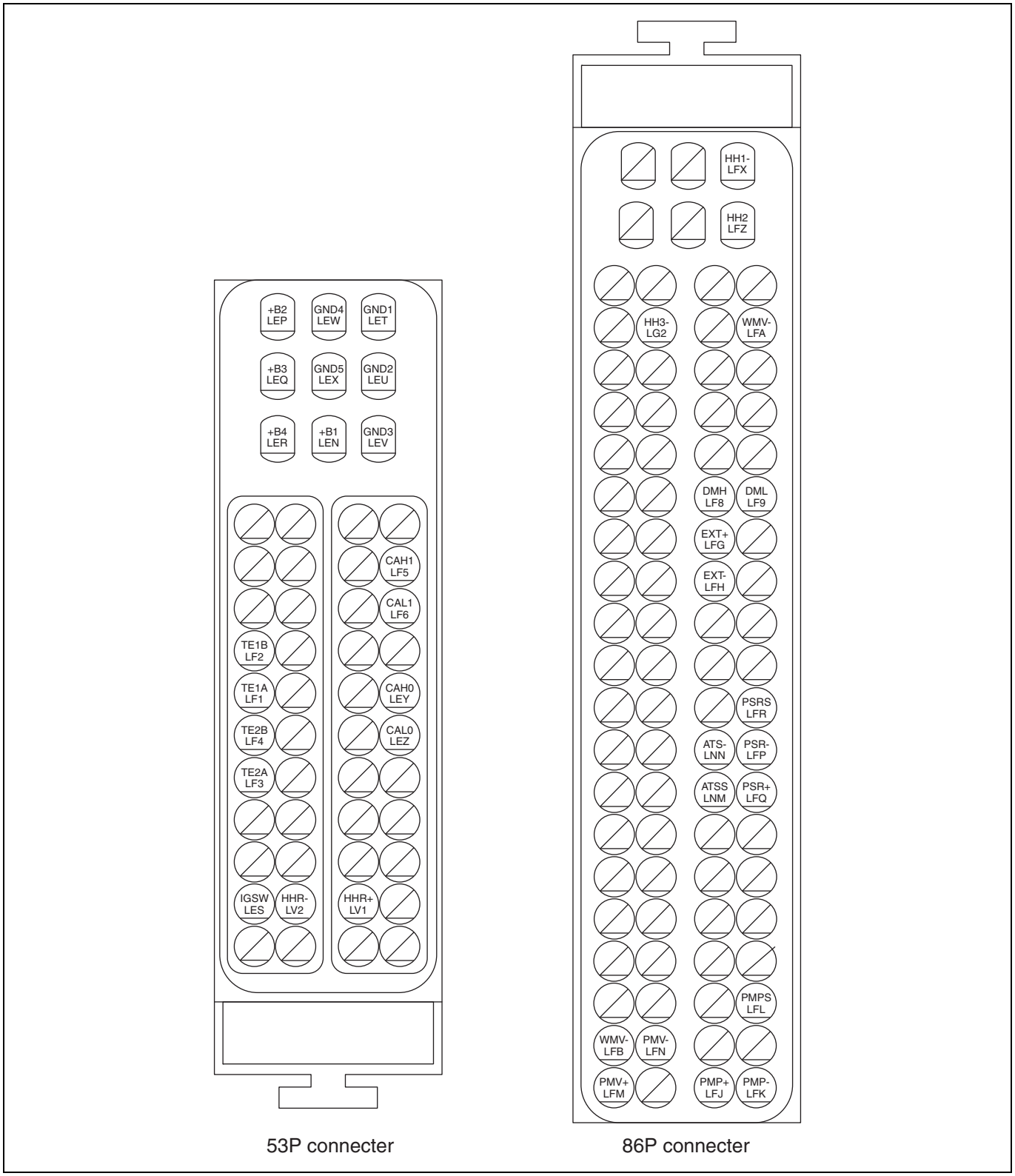


SAPH16F020400007

# SIGNAL CHECK HARNESS

EN01H16F02040F03001006

**1. MENTION OF THE SIGNAL CHECK HARNESS**

(1) HINO provides a signal check harness to check the DCU.

**⚠ CAUTION**

**To prevent damage of the DCU connector, connect the signal check harness and perform measuring by bringing the test probe into contact with the signal check harness side.**

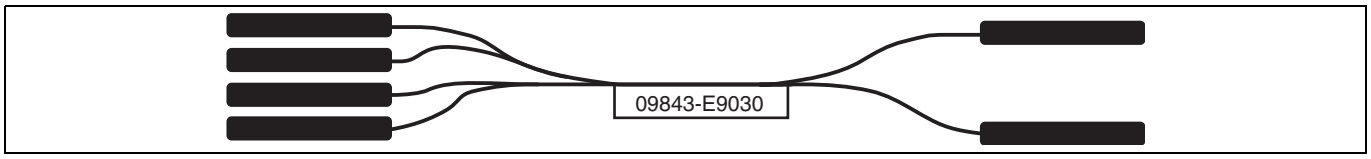


SAPH16F020400008

# INSPECTION

EN01H16F02040F03001007

MALFUNCTION INDICATOR LIGHT STATUS

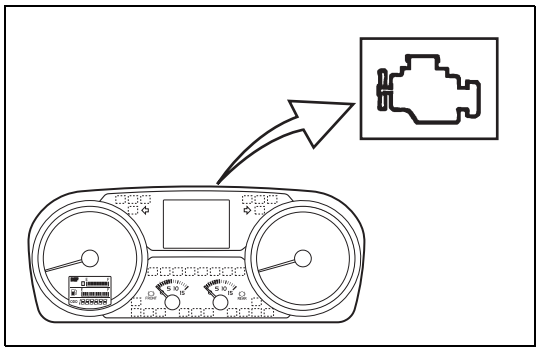

SAPH16F020400009

**1. INSPECTION PROCEDURE**

(1) Set the starter switch to the "ON" position (Do not start the engine) and confirm that the MIL (malfunction indicator light) in the indicator area light up.

**HINT**

- **If the MIL (Malfunction Indicator Light) is lit, perform a system check to see if the malfunction is of the past or present.**
- **In the case of the past malfunction, this light will turn off if a status is judged to be normal in 3 times of driving.**
- **DTC must be cleared on the HINO DX II , after MIL comes off.**

  (Definition of 1 time of driving)

  a. Begins with engine start and ends with engine shut off.
  b. Begins with engine start and ends after four hours of continuous engine-on operation.
  c. Begins at end of the previous four hours of continuous engine on operation and ends after four hours of continuous engine-on operation.
  d. Begins at the end of the previous four hours of continuous engine-on operation and ends with engine shut off.

- Since the normal judgment method and time differ according to the malfunction code, a proper definition will be selected from the above 4 definitions.
- If the MIL (malfunction indicator light) does not go out, the system is abnormal. Check the system according to diagnosis on the following page.

## MALFUNCTION INDICATOR LIGHT ILLUMINATION PATTERN

EN01H16F02040F03001008

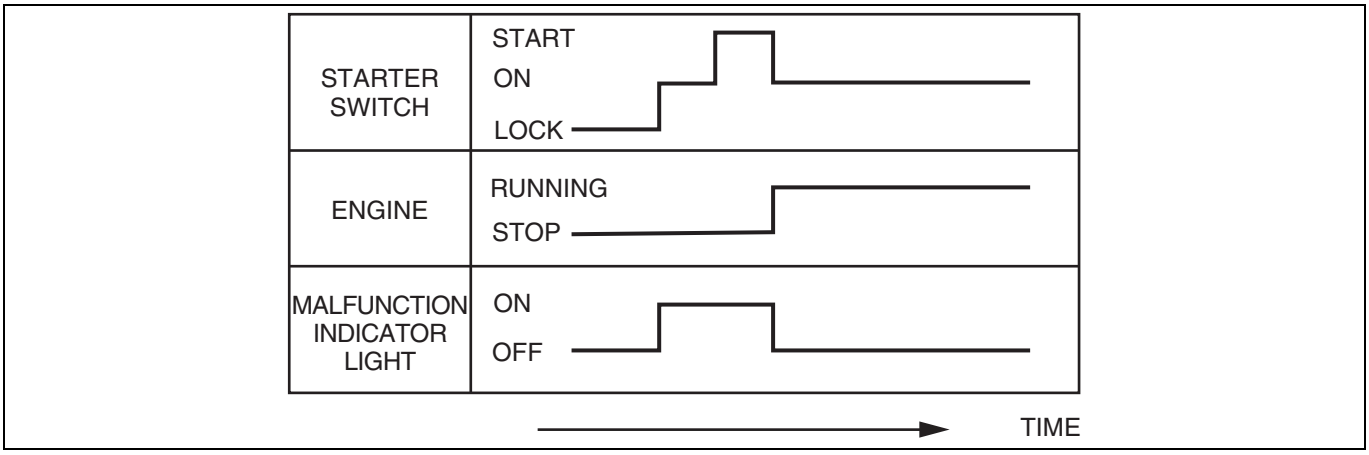


SAPH16F020400010

# DIAGNOSIS USING THE PC DIAGNOSIS TOOL

EN01H16F02040F03001009

## 1. DIAGNOSIS TOOL

(1) Trouble diagnosis can be performed using the PC diagnosis tool. By connection to the trouble diagnosis connector, the trouble location is indicated.

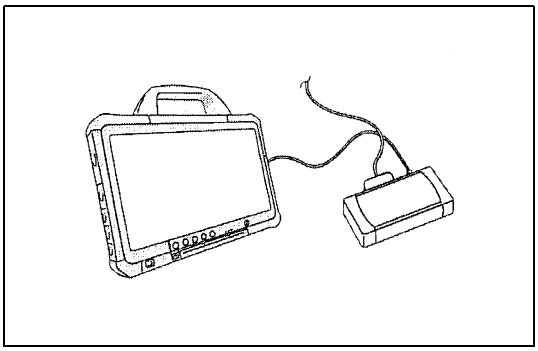

SAPH16F020400011

**PC:**
**Laptop computer**
**Complete function of HINO DX II is conformed on "Panasonic CF-D1".**

**SST:**
**Computer interface**
**(DENSO DST-i set without LCD)**
**Without Bluetooth® (95171-01021)**
**With Bluetooth® (95171-01041)**
**(DENSO DST-i set with LCD)**
**Without Bluetooth® (95171-01031)**
**With Bluetooth® (95171-01051)**
**Diagnosis software: Hino Diagnostic explorer II (HINO DX II )**

**NOTICE**
**Only ECU reprogramming can be performed by authorized HINO dealer.**

## 2. CONNECT THE PC DIAGNOSIS TOOL

(1) Set the starter switch to the “LOCK” position.

(2) Connect the PC diagnosis tool to the trouble diagnosis connector on the left side of steering column.

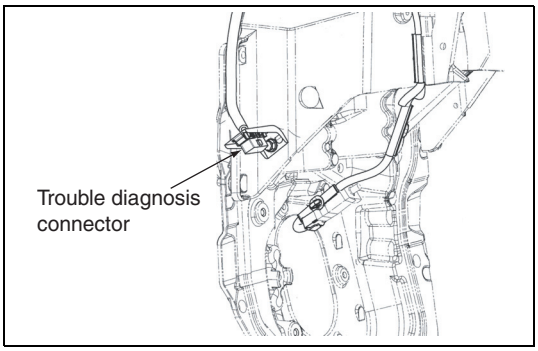


SAPH16F020400012

# DIAGNOSTIC TROUBLE CODE (DTC) TABLE

EN01H16F02040F03001010

| DIAGNOSTIC TROUBLE CODE (DTC) TABLE | | | | | | |
|---|---|---|---|---|---|---|
| MALFUNCTION INDICATOR LIGHT | SCR MALFUNCTION LIGHT | DTC NO. | | DIAGNOSIS ITEM | INSPECTION ITEM | REFER PAGE |
| | | ECU | DCU | | | |
| Light | | P204F | P0071 | Ambient air temperature sensor - rationality | • Ambient air temperature sensor<br>• Wire harness<br>• DCU connector | 5-19 |
| Light | | P204F | P0072 | Ambient air temperature sensor - out of range (Out of range low) | • Ambient air temperature sensor<br>• Wire harness<br>• DCU connector | 5-30 |
| Light | Blinking | P204F | P0073 | Ambient air temperature sensor - out of range (Out of range high) | • Ambient air temperature sensor<br>• Wire harness<br>• DCU connector | 5-38 |
| Light | | P204F | P0562 | Sensor supply voltage - out of range (Out of range low) | • Battery<br>• DCU connector<br>• Wire harness | 5-46 |
| Light | | P204F | P0563 | Sensor supply voltage - out of range (Out of range high) | • Battery<br>• DCU connector<br>• Wire harness | 5-49 |
| Light | | P204F | P060B | Invalid Data Received From AC to DC Converter (DeNOx ECU) | • DCU | 5-52 |
| Light | | P204F | P060C | DCU abnormality | • DCU | 5-54 |
| Light | | P204F | P062F | Internal Control Module EEPROM Error | • DCU | 5-56 |
| Light | | P204F | P0667 | DeNOx ECU temperature sensor 1, 2 - rationality | • DCU | 5-58 |
| Light | | P204F | P068A | Malfunction of main relay | • DCU | 5-60 |
| Light | | P204F | P06AD | DeNOx ECU temperature sensor (Out of range low) | • DCU | 5-65 |
| Light | | P204F | P06AE | DeNOx ECU temperature sensors - out of range (Out of range high) | • DCU | 5-67 |
| Light | | P204F | P142A | DEF pump temperature sensor (Out of range) | • DEF pump<br>• DCU<br>• Wire harness | 5-69 |
| Light | | P204F | P142B | DEF pump temperature sensor - rationality | • DEF pump | 5-78 |

| DIAGNOSTIC TROUBLE CODE (DTC) TABLE | | | | | | |
|---|---|---|---|---|---|---|
| MALFUNCTION INDICATOR LIGHT | SCR MALFUNCTION LIGHT | DTC NO. | | DIAGNOSIS ITEM | INSPECTION ITEM | REFER PAGE |
| | | ECU | DCU | | | |
| Light | | P204F | P14C1 | Exhaust gas temperature sensor (SCR inlet) - rationality | • Exhaust gas temperature sensor<br>• Wire harness<br>• DCU connector | 5-88 |
| Light | Blinking | P204F | P14C2 | Exhaust gas temperature sensor (SCR inlet) - out of range (Out of range low) | • Exhaust gas temperature sensor<br>• Wire harness<br>• DCU connector | 5-101 |
| Light | | P204F | P14C3 | Exhaust gas temperature sensor (SCR inlet) - out of range (Out of range high) | • Exhaust gas temperature sensor<br>• Wire harness<br>• DCU connector | 5-106 |
| Light | Blinking | P204F | P202E | Reductant Delivery Performance | • DEF injector<br>• DEF piping | 5-112 |
| Light | | P204F | P203C | DEF tank level sensor - out of range (Out of range low) | • DEF tank level sensor<br>• DCU connector<br>• Wire harness | 5-116 |
| Light | | P204F | P203D | DEF tank level sensor - out of range (Out of range high) | • DEF tank level sensor<br>• DCU connector<br>• Wire harness | 5-119 |
| No light | | P204F | P2044 | DEF tank temp. sensor failure (Low) | • DEF tank temperature sensor 2 | 5-122 |
| No light | | P204F | P2045 | DEF tank temp. sensor failure (High) | • DEF tank temperature sensor 2 | 5-125 |
| Light | | P204F | P2047 | DEF injector - functional | • DEF injector | 5-128 |
| Light | | P204F | P2048 | DEF injector - disconnection (Disconnection (low side)) | • DEF injector<br>• DCU connector<br>• Wire harness | 5-132 |
| Light | Blinking | P204F | P2049 | DEF injector - disconnection (Disconnection (high side)) | • DEF injector<br>• DCU connector<br>• Wire harness | 5-137 |
| Light | | P204F | P204B | DEF pressure sensor - rationality | • DCU pump | 5-143 |
| Light | | P204F | P204C | DEF pressure sensor - out of range (Out of range low) | • DEF pump<br>• DCU<br>• Wire harness | 5-146 |
| Light | Blinking | P204F | P204D | DEF pressure sensor - out of range (Out of range high) | • DEF pump<br>• DCU<br>• Wire harness | 5-152 |

| DIAGNOSTIC TROUBLE CODE (DTC) TABLE | | | | | | |
|---|---|---|---|---|---|---|
| MALFUNCTION INDICATOR LIGHT | SCR MALFUNCTION LIGHT | DTC NO. | | DIAGNOSIS ITEM | INSPECTION ITEM | REFER PAGE |
| | | ECU | DCU | | | |
| Light | | P204F | P205B | DEF tank temperature sensor - rationality | • DEF tank temperature sensor<br>• DCU connector<br>• Wire harness | 5-158 |
| Light | | P204F | P205C | DEF tank temperature sensor - out of range (Out of range low) | • DEF tank temperature sensor<br>• DCU connector<br>• Wire harness | 5-167 |
| Light | | P204F | P205D | DEF tank temperature sensor - out of range (Out of range high) | • DEF tank temperature sensor<br>• DCU connector<br>• Wire harness | 5-170 |
| Light | | P204F | P206C | DEF quality sensor - short circuit | • DEF sensor (DEF tank level sensor) | 5-173 |
| Light | | P204F | P206D | DEF quality sensor - open circuit | • DEF sensor (DEF tank level sensor) | 5-176 |
| Light | Blinking | P204F | P208A | DEF pump motor - circuit (Open load) | • DEF pump<br>• DCU<br>• Wire harness | 5-179 |
| Light | | P204F | P208B | DEF pump motor - functional | • DEF pump | 5-183 |
| Light | | P204F | P208C | DEF pump motor - circuit (Circuit low) | • DEF pump<br>• DCU<br>• Wire harness | 5-186 |
| Light | | P204F | P208D | DEF pump motor - circuit (Circuit high) | • DEF pump<br>• DCU connector<br>• Wire harness | 5-190 |
| Light | Blinking | P204F | P20A0 | Reverting valve for DEF pump - circuit (Open load) | • DEF pump<br>• DCU connector<br>• Wire harness | 5-194 |
| Light | | P204F | P20A1 | Reverting valve for DEF pump stuck close | • DEF pump | 5-200 |
| Light | | P204F | P20A2 | Reverting valve for DEF pump - circuit (Circuit low) | • DEF pump<br>• DCU connector<br>• Wire harness | 5-204 |
| Light | | P204F | P20A3 | Reverting valve for DEF pump - circuit (Circuit high) | • DEF pump<br>• DCU connector<br>• Wire harness | 5-210 |

| DIAGNOSTIC TROUBLE CODE (DTC) TABLE | | | | | | |
|---|---|---|---|---|---|---|
| MALFUNCTION INDICATOR LIGHT | SCR MALFUNCTION LIGHT | DTC NO. | | DIAGNOSIS ITEM | INSPECTION ITEM | REFER PAGE |
| | | ECU | DCU | | | |
| Light | Blinking | P204F | P20B1 | DEF tank heater valve - circuit (Open load) | • Coolant shutoff valve<br>• Wire harness<br>• DCU connector | 5-216 |
| Light | | P204F | P20B2 | DEF tank heater valve stuck | • Coolant shutoff valve<br>• DCU connector | 5-221 |
| Light | | P204F | P20B3 | DEF tank heater valve - circuit (Circuit low) | • Coolant shutoff valve<br>• Wire harness<br>• DCU connector | 5-229 |
| Light | | P204F | P20B4 | DEF tank heater valve - circuit (Circuit high) | • Coolant shutoff valve<br>• Wire harness<br>• DCU connector | 5-234 |
| Light | Blinking | P204F | P20B9 | DEF heater 2 failure (Open load / low) | • DEF heater<br>• DEF heater pipe<br>• Wire harness | 5-239 |
| Light | Blinking | P204F | P20BC | DEF heater 2 failure (High) | • DEF heater<br>• DEF heater pipe<br>• Wire harness | 5-247 |
| Light | Blinking | P204F | P20BD | DEF heater 1 failure (Open load / low) | • DEF heater<br>• DEF heater pipe<br>• Wire harness | 5-239 |
| Light | Blinking | P204F | P20C0 | DEF heater 1 failure (High) | • DEF heater<br>• DEF heater pipe<br>• Wire harness | 5-247 |
| Light | Blinking | P204F | P20C1 | DEF heater 3 failure (Open load / low) | • DEF heater<br>• DEF heater pipe<br>• Wire harness | 5-239 |
| Light | Blinking | P204F | P20C4 | DEF heater 3 failure (High) | • DEF heater<br>• DEF heater pipe<br>• Wire harness | 5-247 |
| Light | Blinking | P204F | P20E8 | Suction line pressure build up check | • DEF piping (pressure backflow)<br>• DEF pump<br>• Suction line | 5-253 |
| Light | Blinking | P204F | P20E9 | Back flow line and pressure line Pressure check | • DEF piping (pressure backflow)<br>• DEF pump | 5-264 |
| Light | Blinking | P204F | P20F4 | DEF injector abnormal | • DEF injector (Clogging)<br>• DEF pipe (Clogging) | 5-269 |

| DIAGNOSTIC TROUBLE CODE (DTC) TABLE | | | | | | |
|---|---|---|---|---|---|---|
| MALFUNCTION INDICATOR LIGHT | SCR MALFUNCTION LIGHT | DTC NO. | | DIAGNOSIS ITEM | INSPECTION ITEM | REFER PAGE |
| | | ECU | DCU | | | |
| Light | Blinking | P204F | P21C2 | DEF heater relay failure (Open load) | • DEF heater relay<br>• Wire harness | 5-273 |
| Light | Blinking | P204F | P21C3 | DEF heater relay failure (Low) | • DEF heater relay<br>• Wire harness | 5-278 |
| Light | Blinking | P204F | P21C4 | DEF heater relay failure (High) | • DEF heater relay<br>• Wire harness | 5-282 |
| Light | | P204F | P2201 | NOx sensor (SCR upstream) - Performance | • NOx sensor 1<br>• NOx sensor 2<br>• Wire harness | 5-286 |
| Light | | P204F | P2202 | NOx sensor (SCR upstream) and Heater - Circuit | • NOx sensor 1<br>• DCU<br>• Wire harness | 5-290 |
| Light | | P204F | P2203 | SCR inlet NOx sensor failure (High) | • NOx sensor 1 | 5-293 |
| Light | | P204F | P2204 | SCR inlet NOx sensor abnormal | • NOx sensor 1<br>• Wire harness | 5-296 |
| Light | | P204F | P2209 | NOx sensor (SCR upstream) Heater Sense Circuit Range/Performance | • NOx sensor 1 | 5-303 |
| Light | | P204F | P229F | NOx sensor (SCR downstream) - Performance and Monitoring capability | • NOx sensor 1 (SCR upstream)<br>• NOx sensor 2 (SCR downstream)<br>• Exhaust gas temperature sensor 4 (DPR inlet)<br>• Exhaust gas temperature sensor (SCR inlet)<br>• EGR valve<br>• Air flow sensor<br>• Boost pressure sensor<br>• Intake air temperature sensor (intake manifold)<br>• Engine coolant temperature sensor 1<br>• Engine coolant temperature sensor 2<br>• Wire harness<br>• Engine ECU | 5-310 |
| Light | | P204F | P22A0 | NOx sensor (SCR downstream) and Heater-Circuit | • NOx sensor 2<br>• DCU<br>• Wire harness | 5-314 |

| DIAGNOSTIC TROUBLE CODE (DTC) TABLE | | | | | | |
|---|---|---|---|---|---|---|
| MALFUNCTION INDICATOR LIGHT | SCR MALFUNCTION LIGHT | DTC NO. | | DIAGNOSIS ITEM | INSPECTION ITEM | REFER PAGE |
| | | ECU | DCU | | | |
| Light | | P204F | P22A1 | SCR outlet NOx sensor failure (High) | • NOx sensor 2 | 5-317 |
| Light | | P204F | P22A2 | SCR outlet NOx sensor abnormal | • NOx sensor 2<br>• Wire harness | 5-320 |
| Light | | P204F | P22A7 | NOx sensor (SCR downstream) Heater Sense Circuit Range/Performance | • NOx sensor 2 | 5-328 |
| Light | | P204F | P2510 | DeNOx Power Relay Sense Circuit Range/Performance | • DCU | 5-336 |
| Light | | P204F | P2BAE | Feedback control | • DEF<br>• NOx sensor | 5-341 |
| No light | | P204F | U0029 | Vehicle Communication Bus A Performance | • DCU connector<br>• Wire harness | 5-344 |
| No light | | P204F | U0038 | Vehicle Communication Bus B Performance | • DCU connector<br>• Wire harness | 5-347 |
| No light | | P204F | U0100 | DeNOx ECU CAN communication (ECM) | • DCU connector<br>• Wire harness | 5-350 |
| Light | Blinking | P204F | U029D | DeNOx ECU CAN communication (NOx sensor (SCR upstream)) | • NOx sensor<br>• Wire harness | 5-354 |
| Light | Blinking | P204F | U029E | DeNOx ECU CAN communication (NOx sensor (SCR downstream)) | • NOx sensor<br>• Wire harness | 5-357 |
| Light | Blinking | P204F | U02A2 | Communication disrupt (DEF tank sensor) | • DEF sensor<br>• Wire harness | 5-360 |

# DTC: P0071

EN01H16F02040F03001011

## DTC: P0071 Ambient air temperature sensor - rationality

INFORMATION

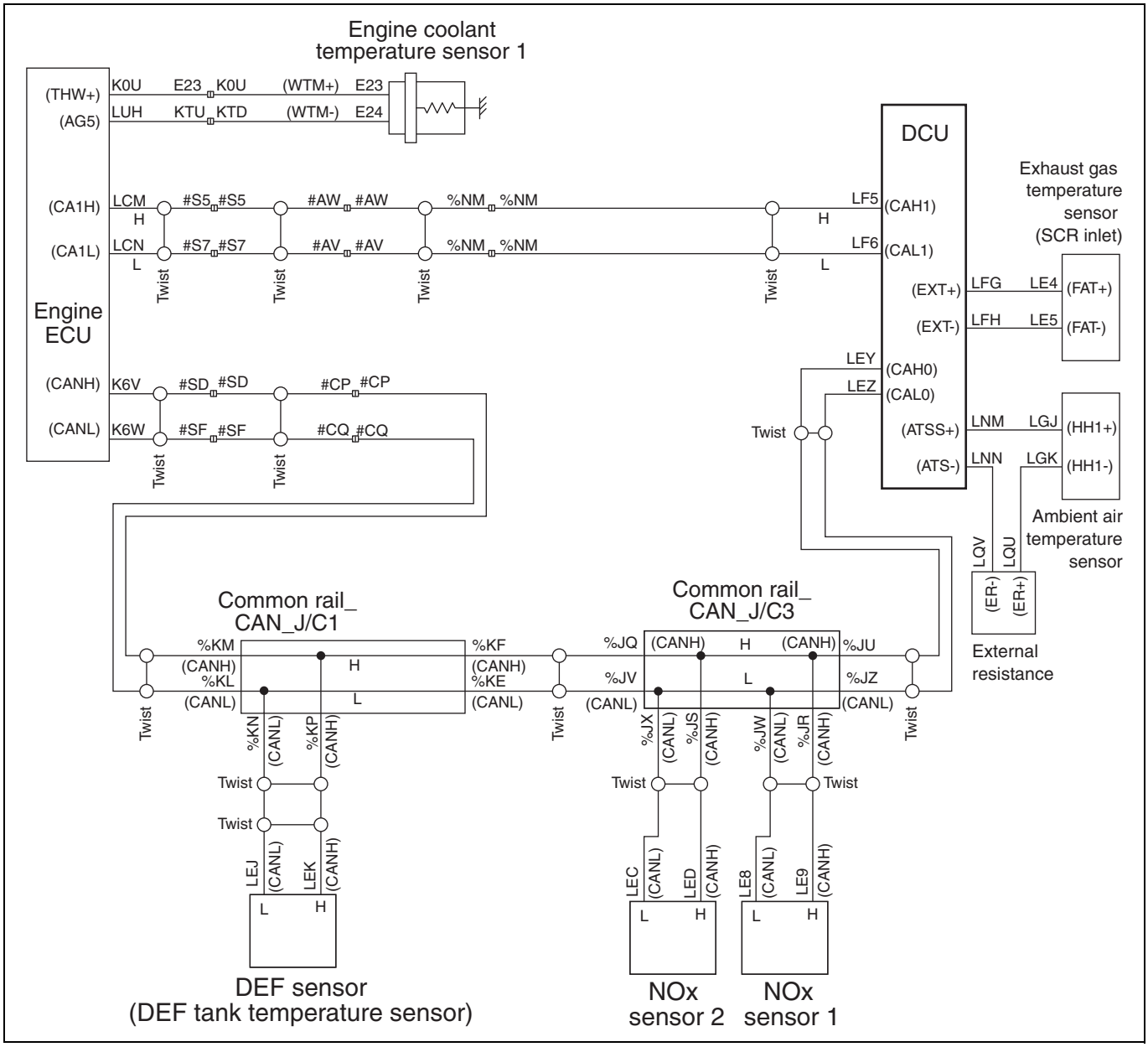


SAPH16F020400013

**1. Technical description**

- Ambient air temperature sensor rationality is checked by comparison with Engine coolant temperature.

**<Description of malfunction>**

- Malfunction of ambient air temperature sensor is detected.

**2. DTC set condition**

(1) DTC detection condition
Starter switch ON.
Difference between DEF pump temperature and exhaust gas temperature (SCR inlet): < 8 °C {46.4 °F} and difference of DEF pump temperature between engine coolant temperature (from Engine ECU): < 8 °C {46.4 °F} and difference between exhaust gas temperature (SCR inlet) and engine coolant temperature (from Engine ECU): < 8°C {46.4°F} and difference between DEF pump temperature and intake air temperature: < 8°C {46.4°F} and difference between exhaust gas temperature (SCR inlet) and intake air temperature: < 8°C {46.4°F} and difference between engine coolant temperature (from Engine ECU) and intake air temperature: < 8°C {46.4°F}.
- Engine speed = 0 r/min

(2) Judgement criteria
Difference between ambient air temperature and intake air temperature (from Engine ECU): > 30°C {86°F} for 10 sec.

**3. Reset condition**

- When the starter switch is ON, and Engine speed = 0 r/min and when the temperature difference between the DEF pump, the exhaust gas temperature and the engine coolant temperature and intake air temperature is within 8°C {46.4°F}, the difference with the engine coolant temperature should be less than 30°C {86°F}.

**4. Indication, warning or system control regulation when the DTC is set.**

- MIL: ON
- Stop of each temperature sensor failure diagnosis.

**5. Symptoms on the vehicle when the DTC is set**

**<Symptoms on the vehicle due to backup control (fail safe)>**

- –

**<Symptoms on the vehicle due to malfunction>**

- –

**6. Pre-inspection work**

- Check if the battery voltage is in the normal range.

**7. After-inspection work**

- Clear all past DTCs.
- Check if no DTC is stored after test drive.

**8. Estimated failure factors**

- Irregular contact (disconnection or poor fit of connector)
- Malfunction of ambient air temperature sensor
- Malfunction of engine coolant temperature sensor
- Malfunction of exhaust gas temperature sensor (SCR inlet)
- Malfunction of DEF pump temperature sensor
- Malfunction of intake air temperature sensor.

## INSPECTION PROCEDURE: P0071

| 1 | Inspect the ambient air temperature sensor connector |
|---|---|

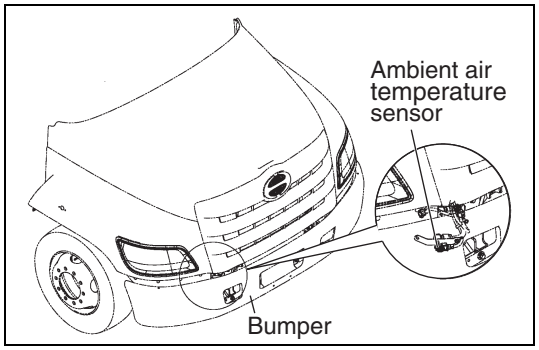

SAPH16F020400014

1. Check the connection of the ambient air temperature sensor connector (Looseness and poor contact).

**Was any failure found?**

**YES**

**Connect securely, repair if needed.**
**Perform "After-inspection work" of INFORMATION section.**

**NO**

**Go to step 2**

| 2 | Inspect the connector of the external resistor |
|---|---|

1. Check the connection of the external resistor connector (Looseness and poor contact).

**Was any failure found?**

**YES**

**Connect securely, repair if needed.**
**Perform "After-inspection work" of INFORMATION section.**

**NO**

**Go to step 3.**

| 3 | Inspect the DCU 86P connector |
|---|---|

1. Check the connection of the DCU 86P connector (Looseness and poor contact).

**Was any failure found?**

**YES**

**Connect securely, repair if needed.**
**Perform "After-inspection work" of INFORMATION section.**

**NO**

**Go to step 4.**

| 4 | Inspect the ambient air temperature sensor |
|---|---|

1. Check the installation of the ambient air temperature sensor.
2. Make sure there is no dirt or damage to the ambient air temperature sensor.

**Was any failure found?**

**YES**

**Clean the ambient air temperature sensor and install it properly. If damaged, replace the ambient air temperature.**
**Perform "After-inspection work" of INFORMATION section.**

**NO**

**Go to step 5.**

| 5 | Inspect the ambient air temperature sensor unit |
|---|---|

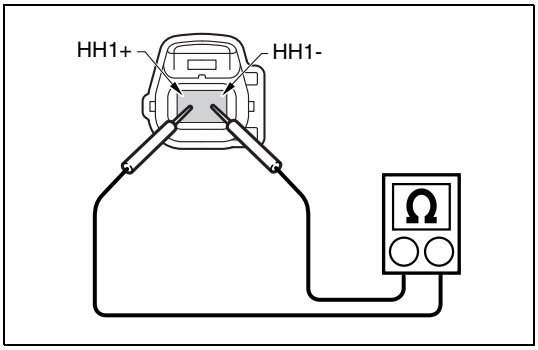

SAPH16F020400015

1. Set the starter switch to the "LOCK" position.
2. Disconnect the ambient air temperature sensor connector.
3. Use the electrical tester to measure the resistance between the terminals of the ambient air temperature sensor.

| Measurement conditions | Tester connections | Standard values |
|---|---|---|
| Starter switch: LOCK | Ambient air temperature sensor HH1+ – HH1- | 25 °C {77 °C}: 1.7 kΩ |

**Do the measurements meet the standard value?**

**YES**

**Go to step 6.**

**NO**

**Replace the ambient air temperature sensor.**
**Perform "After-inspection work" of INFORMATION section.**

## 6 Inspect the external resistor unit

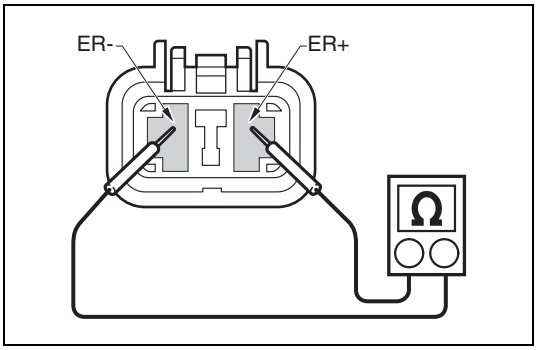


SAPH16F020400016

1. Disconnect the external resistor connector.
2. Use the electrical tester to measure the resistance between the terminals of the external resistor.

| Measurement conditions | Tester connections | Standard values |
|---|---|---|
| Starter switch: LOCK | External resistor ER+ – ER- | 2 kΩ |

**Do the measurements meet the standard value?**

**YES**

**Go to step 7.**

**NO**

**Replace the external resistor.**
**Perform "After-inspection work" of INFORMATION section.**

## 7 Inspect the sensor power supply

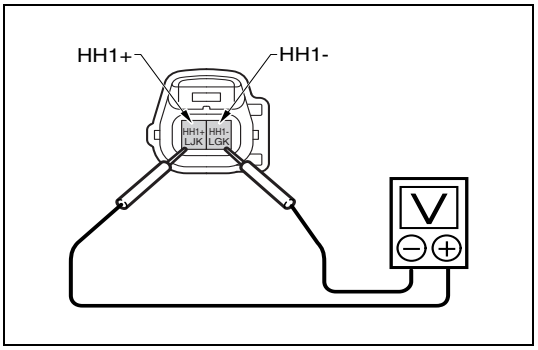


SAPH16F020400017

1. Connect the external resistor connector.
2. Set the starter switch to the "ON" position.
3. Use the electrical tester to measure the voltage between the terminals of the ambient air temperature sensor vehicle-side connector.

| Measurement conditions | Tester connections | Standard values |
|---|---|---|
| Starter switch: ON | Ambient air temperature sensor vehicle-side connector HH1+ – HH1- | 4.5 – 5.5 V |

**Do the measurements meet the standard value?**

**YES**

**Go to step 10.**

**NO**

**Go to step 8.**

| 8 | Inspect for short-circuit in the ambient air temperature sensor harness |
|---|---|

1. Set the starter switch to the "LOCK" position.
2. Disconnect the DCU 86P connector.
3. Connect the signal check harness and use the electrical tester to measure the resistance between the terminals of the DCU 86P vehicle-side connector and the ground.

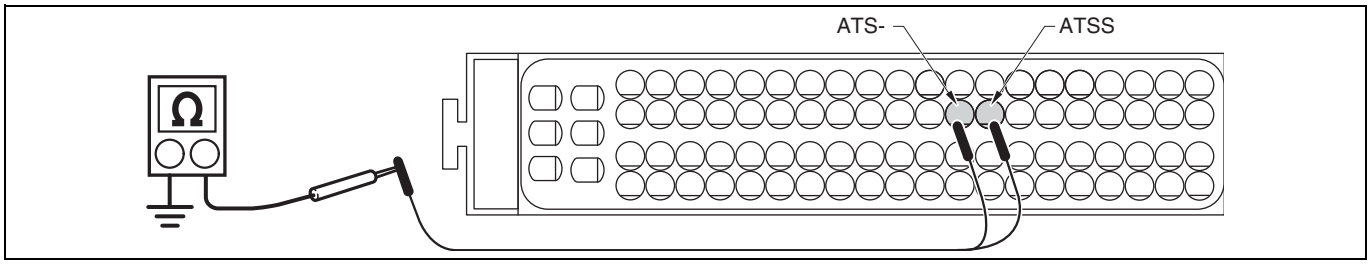


SAPH16F020400018

| Measurement conditions | Tester connections | Standard values |
|---|---|---|
| **Starter switch: LOCK** | **DCU 86P vehicle-side connector ATSS – Ground ATS- – Ground** | **∞ Ω** |

**Do the measurements meet the standard value?**

**YES**

**Go to step 9.**

**NO**

**Repair or replace the harness.**
**Perform "After-inspection work" of INFORMATION section.**

| 9 | Inspect for disconnections of the ambient air temperature sensor harness |
|---|---|

1. Connect the ambient air temperature sensor connector.
2. Connect the signal check harness and use the electrical tester to measure the resistance between the terminals of the DCU 86P vehicle-side connector.

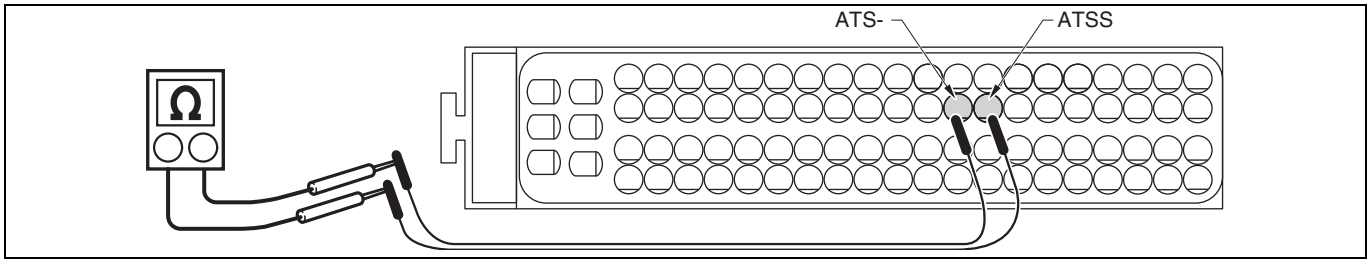


SAPH16F020400019

| Measurement conditions | Tester connections | Standard values |
|---|---|---|
| Starter switch: LOCK | DCU 86P vehicle-side connector ATSS – ATS- | 25 °C {77 °F}: 3.7 kΩ |

**Do the measurements meet the standard value?**

**YES**

**Go to step 10.**

**NO**

**Repair or replace the harness.**
**Perform "After-inspection work" of INFORMATION section.**

| 10 | Inspect the engine coolant temperature sensor connector |
|---|---|

1. Check the connection of the engine coolant temperature sensor connector (Looseness and poor contact).

**Was any failure found?**

**YES**

**Connect securely, repair if needed.**
**Perform "After-inspection work" of INFORMATION section.**

**NO**

**Go to step 11.**

| 11 | Inspect the engine coolant temperature sensor |
|---|---|

1. Check the installation of the engine coolant temperature sensor.
2. Make sure there is no dirt or damage to the engine coolant temperature sensor.

**Was any failure found?**

**YES**

**Clean the engine coolant temperature sensor and install it properly. If damaged, replace the engine coolant temperature sensor.**
**Perform "After-inspection work" of INFORMATION section.**

**NO**

**Go to step 12.**

| 12 | Inspect the engine coolant temperature sensor unit |
|---|---|

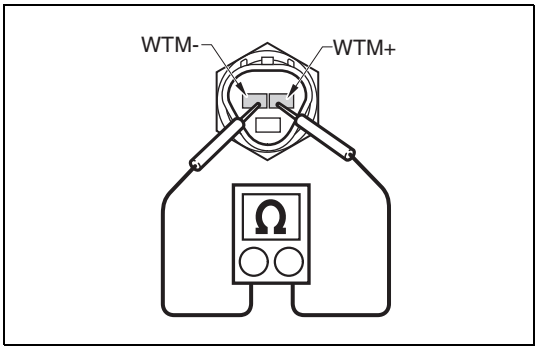

SAPH16F020400020

1. Disconnect the engine coolant temperature sensor connector.
2. Use the electrical tester to measure the resistance between the terminals of the engine coolant temperature sensor.

| Measurement conditions | Tester connections | Standard values |
|---|---|---|
| Starter switch: LOCK | Engine coolant temperature sensor WTM+ – WTM- | 20 °C {68 °F}: 2.32 – 2.59 kΩ<br>80 °C {176 °F}: 0.310 – 0.326 kΩ |

**Do the measurements meet the standard value?**

**YES**

**Go to step 13.**

**NO**

**Replace the engine coolant temperature sensor.**
**Perform "After-inspection work" of INFORMATION section.**

| 13 | Inspect the exhaust gas temperature sensor (SCR inlet) connector |
|---|---|

1. Check the connection of the exhaust gas temperature sensor (SCR inlet) connector (Looseness and poor contact).

**Was any failure found?**

**YES**

**Connect securely, repair if needed.**
**Perform "After-inspection work" of INFORMATION section.**

**NO**

**Go to step 14.**

| 14 | Inspect the exhaust gas temperature sensor (SCR inlet) |
|---|---|

1. Check the installation of the exhaust gas temperature sensor (SCR inlet).
2. Make sure there is no dirt or damage to the exhaust gas temperature sensor (SCR inlet).

**Was any failure found?**

**YES**

**Clean the exhaust gas temperature sensor and install it properly. If damaged, replace the exhaust gas temperature sensor (SCR inlet).**
**Perform "After-inspection work" of INFORMATION section.**

**NO**

**Go to step 15.**

| 15 | Inspect the exhaust gas temperature sensor (SCR inlet) unit |
|---|---|

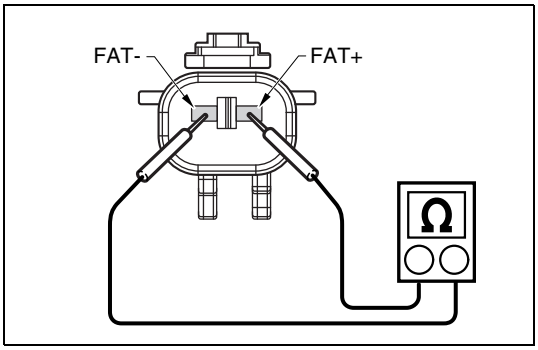


SAPH16F020400021

1. Set the starter switch to the "LOCK" position.
2. Disconnect the exhaust gas temperature sensor (SCR inlet) connector.
3. Use the electrical tester to measure the resistance between the terminals of the exhaust gas temperature sensor (SCR inlet).

| Measurement conditions | Tester connections | Standard values |
|---|---|---|
| **Starter switch: LOCK** | **Exhaust gas temperature sensor (SCR inlet) FAT+ – FAT-** | **20 °C {68 °F}: 220 Ω** |

**Do the measurements meet the standard value?**

**YES**

**Go to step 16.**

**NO**

**Replace the exhaust gas temperature sensor (SCR inlet).**
**Perform "After-inspection work" of INFORMATION section.**

| 16 | Inspect the DEF pump temperature sensor connector |
|---|---|

1. Check the connection of the DEF pump temperature sensor connector (Looseness and poor contact).

**Was any failure found?**

**YES**

**Connect securely, repair if needed.**
**Perform "After-inspection work" of INFORMATION section.**

**NO**

**Go to step 17.**

| 17 | Check the DTC detected (DCU) [HINO DX ll ] |
|---|---|

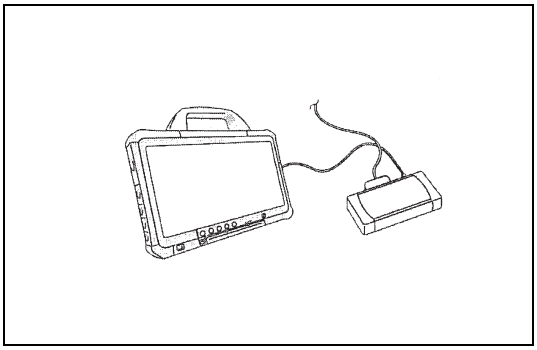

SAPH16F020400022

1. Perform an engine warm-up. (Water temperature: 60 °C {140 °F} or more)
2. Stop the engine.
3. Set the starter switch to the "ON" position.
4. Select [DCU] and check if P0071 has been detected.

**Has DTC P0071 been detected?**

**YES**

**Replace the DCU.**
**Perform "After-inspection work" of INFORMATION section.**

**NO**

**Procedure completed.**
**Perform "After-inspection work" of INFORMATION section.**

# DTC: P0072

EN01H16F02040F03001012

## DTC: P0072 Ambient air temperature sensor - out of range (Out of range low)

INFORMATION

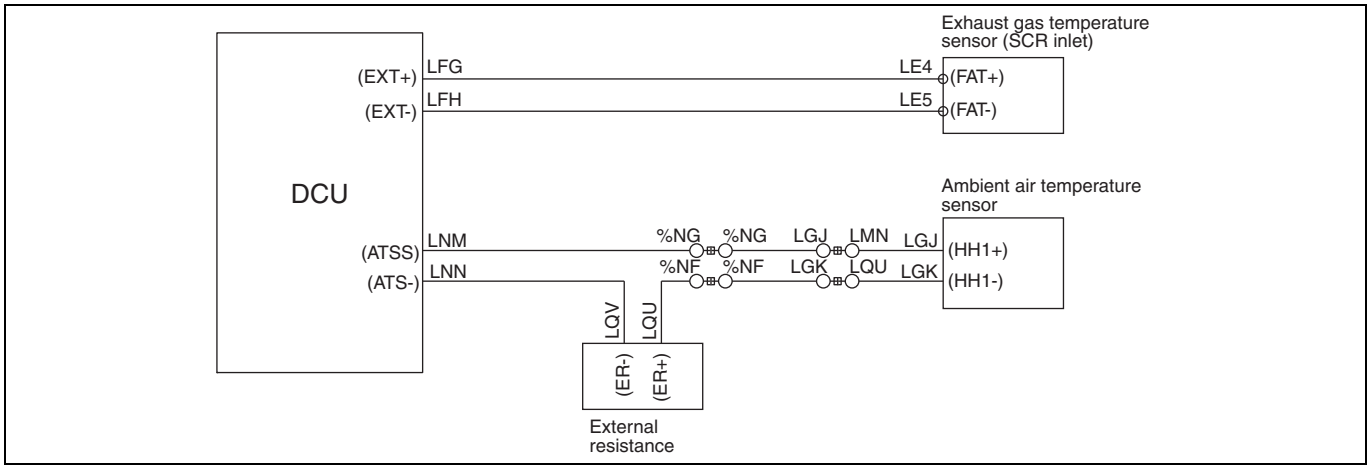


SAPH16F020400023

**1. Technical description**

- The ambient air temperature sensor inputs the outside air temperature data into the DCU to determine the heating time when performing thawing or thermal insulation of the DEF in the DEF system pipes.
- The ambient air temperature sensor is connected to the external resistor at 2 kΩ to reduce the current flowing value through the sensor circuit.

**<Description of malfunction>**

- Ambient air temperature sensor malfunction detected.

**2. DTC set condition**

(1) DTC detection condition
Starter switch ON.

(2) Judgement criteria
Ambient air temperature sensor voltage: Less than 3.4 V

**3. Reset condition**

- After having restored to the normal condition.

**4. Indication, warning or system control regulation when the DTC is set.**

- MIL: ON
- Each temperature sensors failure diagnosis is stopped.

**5. Symptoms on the vehicle when the DTC is set**

**<Symptoms on the vehicle due to backup control (fail safe)>**

- –

**<Symptoms on the vehicle due to malfunction>**

- –

**6. Pre-inspection work**

- Check if the battery voltage is in the normal range.

**7. After-inspection work**

- Clear all past DTCs.

- Check if no DTC is stored after test drive.

**8. Estimated failure factors**

- Disconnection or short-circuit in the sensor harness
- Disconnection or poor fit of connector
- Malfunction of the ambient air temperature sensor
- Failure of the external resistor

## INSPECTION PROCEDURE: P0072

| 1 | Inspect the ambient air temperature sensor connector |
|---|---|

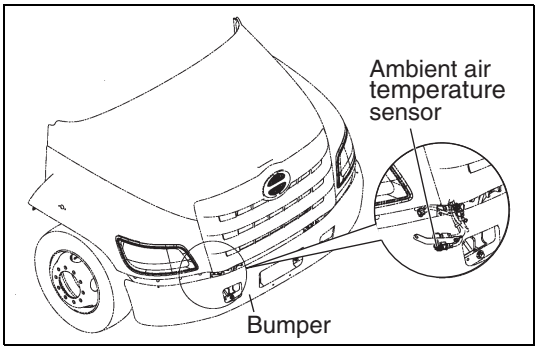

SAPH16F020400024

1. Check the connection of the ambient air temperature sensor connector (Looseness and poor contact).

**Was any failure found?**

**YES**

**Connect securely, repair if needed. Perform "After-inspection work" of INFORMATION section.**

**NO**

**Go to step 2.**

| 2 | Inspect the connector of the external resistor |
|---|---|

1. Check the connection of the external resistor connector (Looseness and poor contact).

**Was any failure found?**

**YES**

**Connect securely, repair if needed. Perform "After-inspection work" of INFORMATION section.**

**NO**

**Go to step 3.**

| 3 | Inspect the ambient air temperature sensor |
|---|---|

1. Check the installation of the ambient air temperature sensor.
2. Make sure there is no dirt or damage to the sensing unit of the ambient air temperature sensor.

**Was any failure found?**

**YES**

**Clean the ambient air temperature sensor and install it properly. If damaged, replace the ambient air temperature.**
**Perform "After-inspection work" of INFORMATION section.**

**NO**

**Go to step 4.**

| 4 | Inspect the ambient air temperature sensor unit |
|---|---|

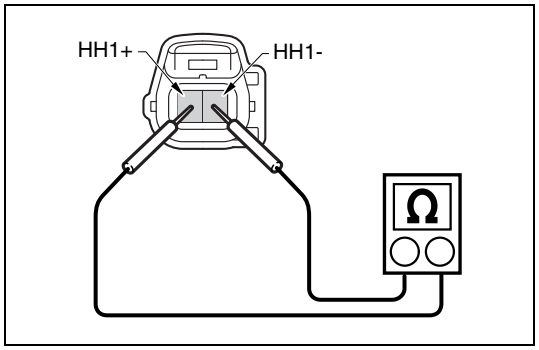

SAPH16F020400025

1. Set the starter switch to the "LOCK" position.
2. Disconnect the ambient air temperature sensor connector.
3. Use the electrical tester to measure the resistance between the terminals of the ambient air temperature sensor.

| Measurement conditions | Tester connections | Standard values |
|---|---|---|
| Starter switch: LOCK | Ambient air temperature sensor HH1+ – HH1- | 25 °C {77 °F}: 1.7 kΩ |

**Do the measurements meet the standard value?**

**YES**

**Go to step 5.**

**NO**

**Replace the ambient air temperature sensor.**
**Perform "After-inspection work" of INFORMATION section.**

## 5 Inspect the external resistor unit

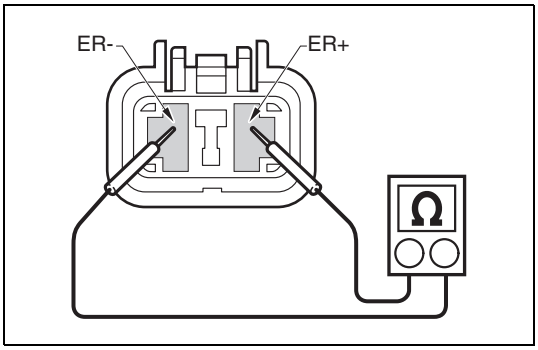


SAPH16F020400026

1. Disconnect the external resistor connector.
2. Use the electrical tester to measure the resistance between the terminals of the external resistor.

| Measurement conditions | Tester connections | Standard values |
|---|---|---|
| Starter switch: LOCK | External resistor ER+ – ER- | 2 kΩ |

**Do the measurements meet the standard value?**

**YES**

**Go to step 6.**

**NO**

**Replace the external resistor.**
**Perform "After-inspection work" of INFORMATION section.**

## 6 Inspect the sensor power supply

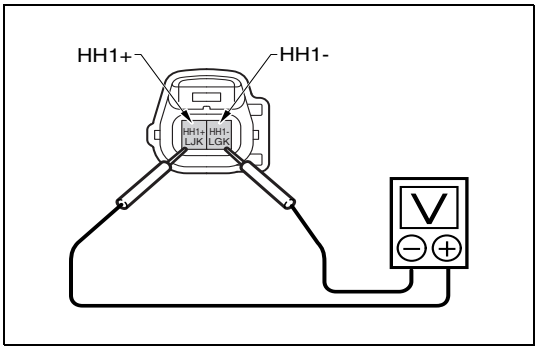


SAPH16F020400027

1. Connect the external resistor connector.
2. Set the starter switch to the "ON" position.
3. Use the electrical tester to measure the voltage between the terminals of the ambient air temperature vehicle-side connector.

| Measurement conditions | Tester connections | Standard values |
|---|---|---|
| Starter switch: ON | Ambient air temperature sensor vehicle-side connector HH1+ – HH1- | 4.5 – 5.5 V |

**Do the measurements meet the standard value?**

**YES**

**Go to step 9.**

**NO**

**Go to step 7.**

| 7 | Inspect for short-circuit in the ambient air temperature sensor harness |
|---|---|

1. Set the starter switch to the "LOCK" position.
2. Disconnect the DCU 86P connector.
3. Connect the signal check harness and use the electrical tester to measure the resistance between the terminals of the DCU 86P vehicle-side connector and the ground.

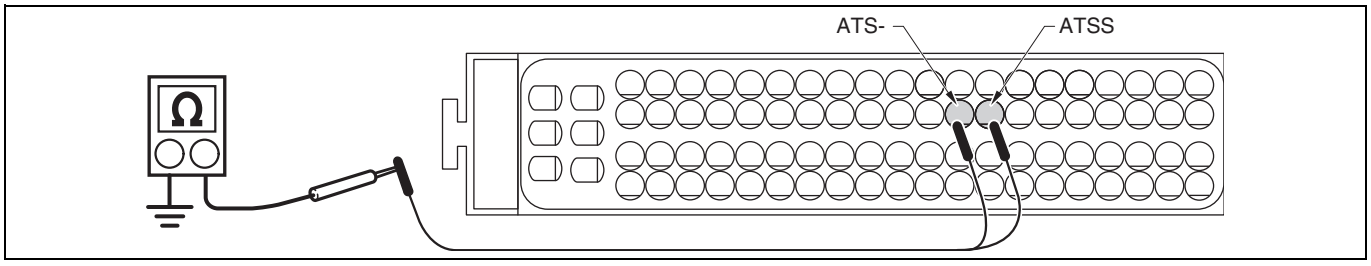


SAPH16F020400028

| Measurement conditions | Tester connections | Standard values |
|---|---|---|
| **Starter switch: LOCK** | **DCU 86P vehicle-side connector – ground**<br>**ATSS – Ground**<br>**ATS- – Ground** | ∞ Ω |

**Do the measurements meet the standard value?**

**YES**

**Go to step 8.**

**NO**

**Repair or replace the harness.**
**Perform "After-inspection work" of INFORMATION section.**

| 8 | Inspect for disconnection in the ambient air temperature sensor harness |
|---|---|

1. Connect the ambient air temperature sensor connector.
2. Connect the signal check harness and use the electrical tester to measure the resistance between the terminals of the DCU 86P vehicle-side connector.

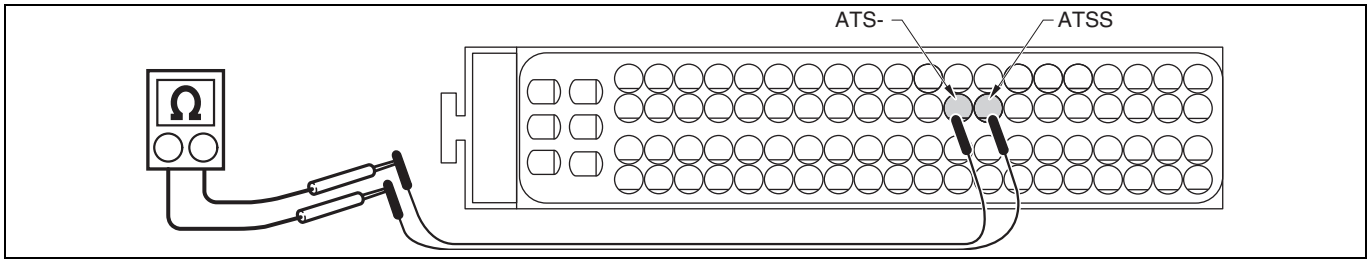


SAPH16F020400029

| Measurement conditions | Tester connections | Standard values |
|---|---|---|
| Starter switch: LOCK | DCU 86P vehicle-side connector ATSS – ATS- | 25 °C {77 °F}: 3.7 kΩ |

**Do the measurements meet the standard value?**

**YES**

**Go to step 9.**

**NO**

**Repair or replace the harness.**
**Perform "After-inspection work" of INFORMATION section.**

| 9 | Check the DTC detected (DCU) [HINO DX ll ] |
|---|---|

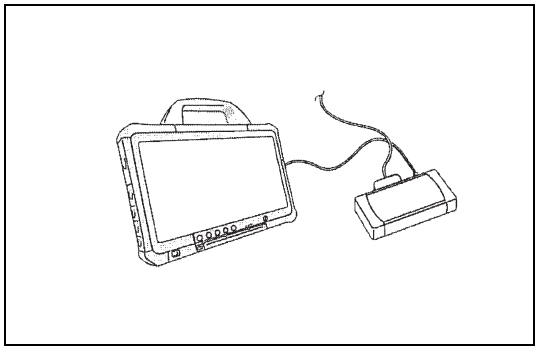

SAPH16F020400030

1. Set the starter switch to the "LOCK" position.
2. Connect the vehicle to HINO DX II .
3. Set the starter switch to the "ON" position.
4. Select [DCU] and check if P0072 has been detected.

**Has DTC P0072 been detected?**

**YES**

**Replace the DCU.**
**Perform "After-inspection work" of INFORMATION section.**

**NO**

**Procedure completed.**
**Perform "After-inspection work" of INFORMATION section.**

# DTC: P0073

EN01H16F02040F03001013

## DTC: P0073 Ambient air temperature sensor - out of range (Out of range high)

INFORMATION

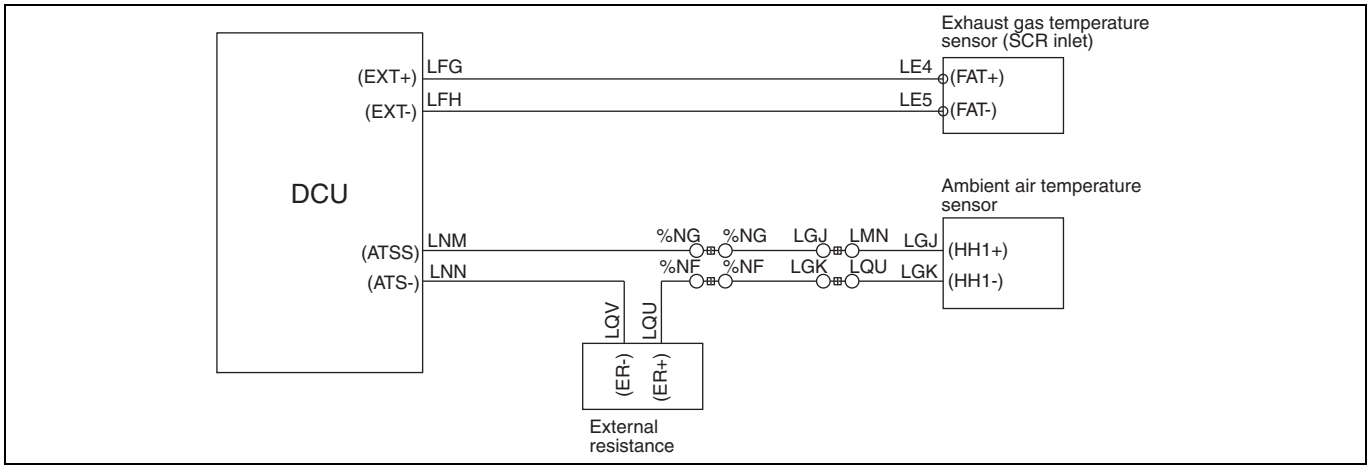


SAPH16F020400031

**1. Technical description**

- The ambient air temperature sensor inputs the outside air temperature data into the DCU to determine the heating time when performing thawing or thermal insulation of the DEF in the DEF system pipes.
- The ambient air temperature sensor is connected to the external resistance at 2 kΩ to reduce the current flowing value through the sensor circuit.

**<Description of malfunction>**

- Ambient air temperature sensor malfunction detected.

**2. DTC set condition**

(1) DTC detection condition
Starter switch ON.

(2) Judgement criteria
Ambient air temperature sensor voltage: More than 4.783 V

**3. Reset condition**

- After having restored to the normal condition.

**4. Indication, warning or system control regulation when the DTC is set.**

- MIL: ON
- SCR malfunction light: ON
- If the failure is not corrected within 500 miles: Engine power limited.
- If the failure is not corrected within 2,000 miles: Vehicle speed limited.

**5. Symptoms on the vehicle when the DTC is set**

**<Symptoms on the vehicle due to backup control (fail safe)>**

- Lack of engine power (If the failure is not corrected within 500 miles).
- Vehicle speed does not increase (If the failure is not corrected within 2,000 miles).

**<Symptoms on the vehicle due to malfunction>**

- –

**6. Pre-inspection work**

- Check if the battery voltage is in the normal range.

**7. After-inspection work**

- Clear all past DTCs.
- Reset "Urea SCR related memory".
- Check if no DTC is stored after test drive.

**8. Estimated failure factors**

- Disconnection or short-circuit in the sensor harness
- Disconnection or poor fit of connector
- Malfunction of the ambient air temperature sensor
- Failure of the external resistor

## INSPECTION PROCEDURE: P0073

| 1 | Inspect the ambient air temperature sensor connector |
|---|---|

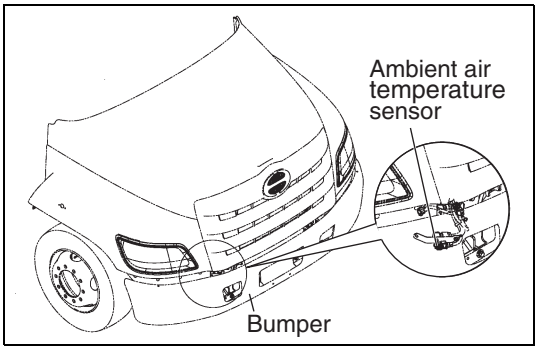


SAPH16F020400032

1. Check the connection of the ambient air temperature sensor connector (Looseness and poor contact).

**Was any failure found?**

**YES**

**Connect securely, repair if needed. Perform "After-inspection work" of INFORMATION section.**

**NO**

**Go to step 2.**

| 2 | Inspect the connector of the external resistor |
|---|---|

1. Check the connection of the external resistor connector (Looseness and poor contact).

**Was any failure found?**

**YES**

**Connect securely, repair if needed. Perform "After-inspection work" of INFORMATION section.**

**NO**

**Go to step 3.**

| 3 | Inspect the ambient air temperature sensor |
|---|---|

1. Check the installation of the ambient air temperature sensor.
2. Make sure there is no dirt or damage to the sensing unit of the ambient air temperature sensor.

**Was any failure found?**

**YES**

**Clean the ambient air temperature sensor and install it properly. If damaged, replace the ambient air temperature sensor.**
**Perform "After-inspection work" of INFORMATION section.**

**NO**

**Go to step 4.**

| 4 | Inspect the ambient air temperature sensor unit |
|---|---|

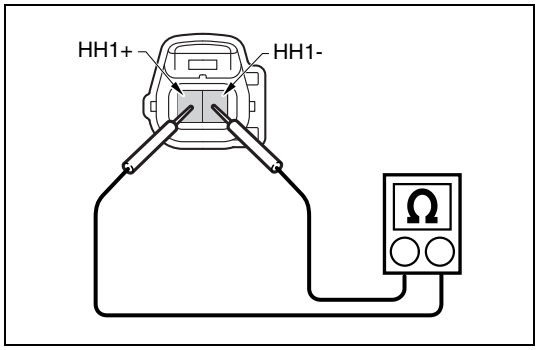

SAPH16F020400033

1. Set the starter switch to the "LOCK" position.
2. Disconnect the ambient air temperature sensor connector.
3. Use the electrical tester to measure the resistance between the terminals of the ambient air temperature sensor.

| Measurement conditions | Tester connections | Standard values |
|---|---|---|
| Starter switch: LOCK | Ambient air temperature sensor HH1+ – HH1- | 25 °C {77 °F}: 1.7 kΩ |

**Do the measurements meet the standard value?**

**YES**

**Go to step 5.**

**NO**

**Replace the ambient air temperature sensor.**
**Perform "After-inspection work" of INFORMATION section.**

| 5 | Inspect the external resistor unit |
|---|---|

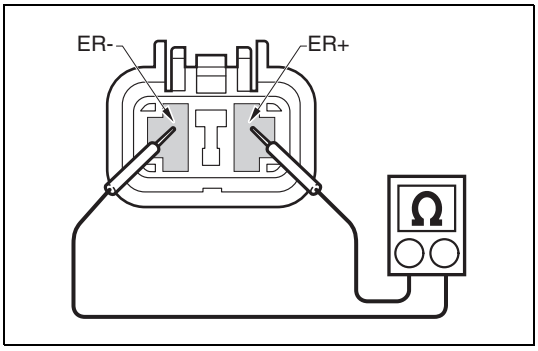


SAPH16F020400034

1. Disconnect the external resistor connector.
2. Use the electrical tester to measure the resistance between the terminals of the external resistor.

| Measurement conditions | Tester connections | Standard values |
|---|---|---|
| Starter switch: LOCK | External resistor ER+ – ER- | 2 kΩ |

**Do the measurements meet the standard value?**

**YES**

**Go to step 6.**

**NO**

**Replace the external resistor.**
**Perform "After-inspection work" of INFORMATION section.**

| 6 | Inspect the sensor power supply |
|---|---|

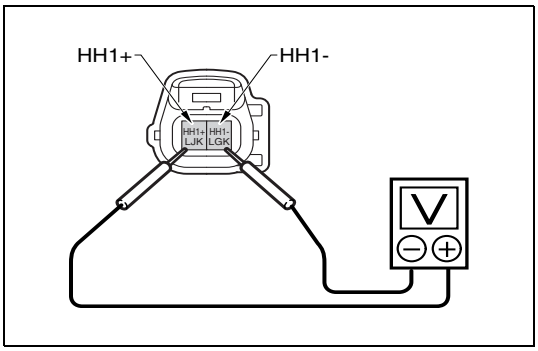


SAPH16F020400035

1. Connect the external resistor connector.
2. Set the starter switch to the "ON" position.
3. Use the electrical tester to measure the voltage between the terminals of the ambient air temperature sensor vehicle-side connector.

| Measurement conditions | Tester connections | Standard values |
|---|---|---|
| Starter switch: ON | Ambient air temperature sensor vehicle-side connector HH1+ – HH1- | 4.5 – 5.5 V |

**Do the measurements meet the standard value?**

**YES**

**Go to step 9.**

**NO**

**Go to step 7.**

| 7 | Inspect for short-circuit in the ambient air temperature sensor harness |
|---|---|

1. Set the starter switch to the "LOCK" position.
2. Disconnect the DCU 86P connector.
3. Use the electrical tester to measure the resistance between the terminals of the DCU 86P vehicle-side connector and the ground.

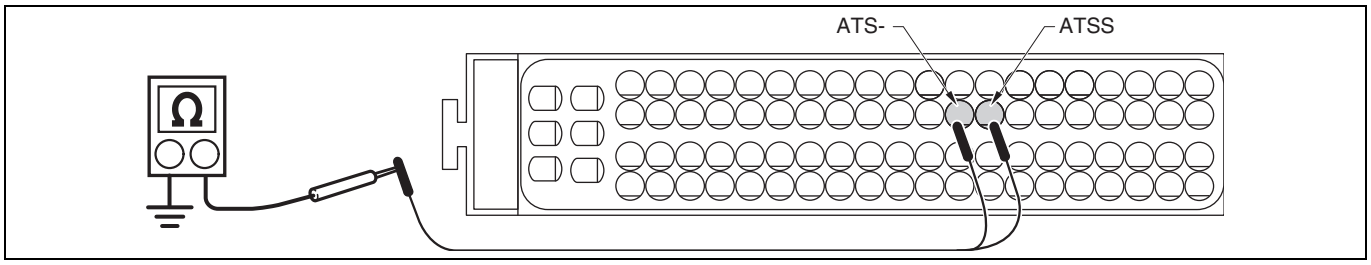


SAPH16F020400036

| Measurement conditions | Tester connections | Standard values |
|---|---|---|
| **Starter switch: LOCK** | **DCU 86P vehicle-side connector ATSS – Ground ATS- – Ground** | ∞ Ω |

**Do the measurements meet the standard value?**

**YES**

**Go to step 8.**

**NO**

**Repair or replace the harness.**
**Perform "After-inspection work" of INFORMATION section.**

| 8 | Inspect for disconnection in the ambient air temperature sensor harness |
|---|---|

1. Connect the ambient air temperature sensor connector.
2. Connect the signal check harness, and use the electrical tester to measure the resistance between the terminals of the DCU 86P vehicle-side connector.

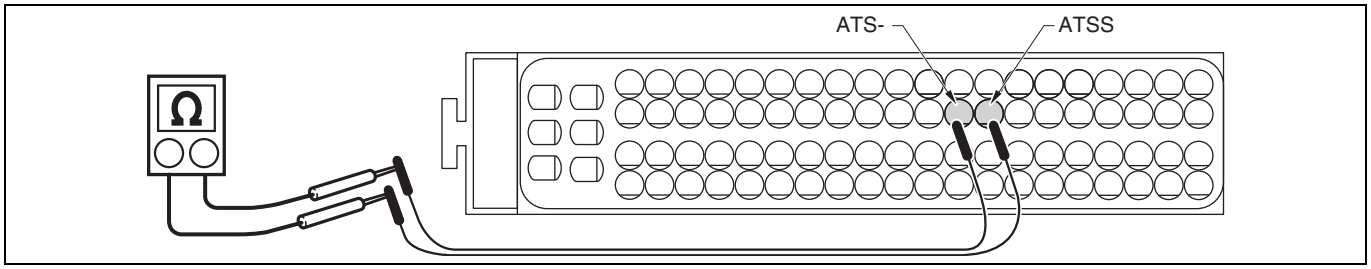


SAPH16F020400037

| Measurement conditions | Tester connections | Standard values |
|---|---|---|
| Starter switch: LOCK | DCU 86P vehicle-side connector ATSS – ATS- | 25 °C {77 °F}: 3.7 kΩ |

**Do the measurements meet the standard value?**

**YES**

**Go to step 9.**

**NO**

**Repair or replace the harness.**
**Perform "After-inspection work" of INFORMATION section.**

| 9 | Check the DTC detected (DCU) |
|---|---|

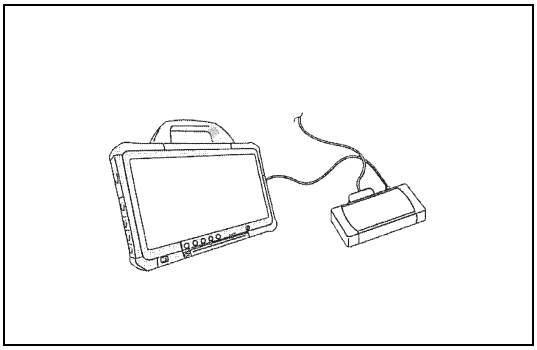

SAPH16F020400038

1. Set the starter switch to the "LOCK" position.
2. Connect the vehicle to HINO DX II .
3. Set the starter switch to the "ON" position.
4. Select [DCU] and check if P0073 has been detected.

**Has DTC P0073 been detected?**

**YES**

**Replace the DCU.**
**Perform "After-inspection work" of INFORMATION section.**

**NO**

**Procedure completed.**
**Perform "After-inspection work" of INFORMATION section.**

# DTC: P0562

EN01H16F02040F03001014

## DTC: P0562 Sensor supply voltage - out of range (Out of range low)

INFORMATION

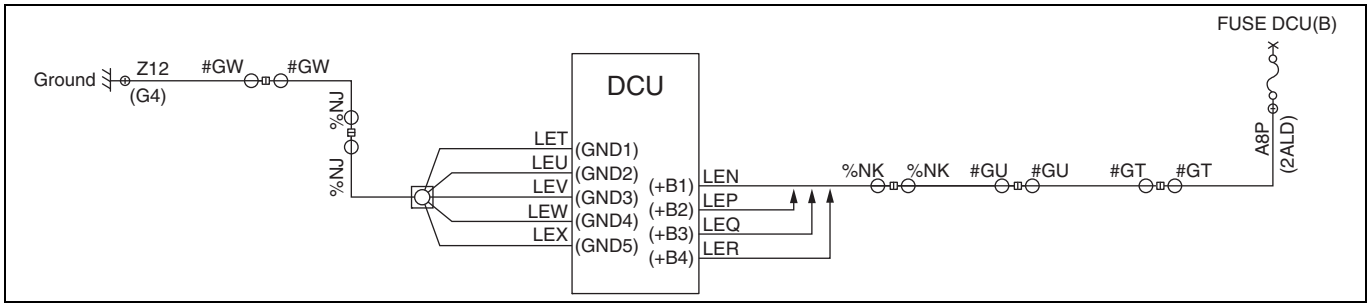


SAPH16F020400039

**1. Technical description**

- DCU receives electric power from battery.

**<Description of malfunction>**

- Low voltage malfunction is detected in battery voltage (DCU power circuit).

**2. DTC set condition**

(1) DTC detection condition
Starter switch ON.
(2) Judgement criteria
Battery voltage is less than 9 V.

**3. Reset condition**

- After having restored to the normal conditions.

**4. Indication, warning or system control regulation when the DTC is set.**

- MIL: ON
- DEF injection is stopped.
- NOx reduction quantity monitoring is aborted.

**5. Symptoms on the vehicle when the DTC is set**

**<Symptoms on the vehicle due to backup control (fail safe function)>**

- NOx reduction function is prevented.

**<Symptoms on the vehicle due to malfunction>**

- –

**6. Pre-inspection work**

- Check if the battery voltage is in the normal range.

**7. After-inspection work**

- Clear all past DTCs.
- Check if no DTC is stored after test drive.

**8. Estimated failure factors**

- Battery terminal harness is disconnected.
- Battery is dead.
- Harness connection is faulty.

## INSPECTION PROCEDURE: P0562

| 1 | Inspect the DCU 53P connector |
|---|---|

1. Check the connection of the DCU 53P connector (Looseness and poor contact).

**Was any failure found?**

**YES**

**Connect securely, repair if needed.**
**Perform "After-inspection work" of INFORMATION section.**

**NO**

**Go to step 2.**

| 2 | Inspect the voltage of the DCU power supply |
|---|---|

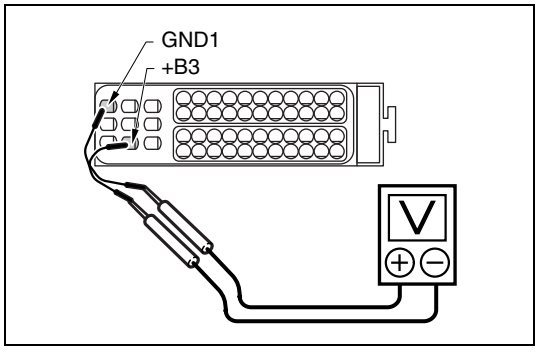

SAPH16F020400040

1. Set the starter switch to the "LOCK" position.
2. Disconnect the DCU 53P connector.
3. Connect the signal check harness and use the electrical tester to measure the voltage between the terminals of the DCU 53P vehicle-side connector.

| Measurement conditions | Tester connections | Standard values |
|---|---|---|
| Starter switch: LOCK | DCU 53P vehicle-side connector +B3 – GND1 | 9 – 16 V |

**Do the measurements meet the standard value?**

**YES**

**Go to step 3.**

**NO**

**Repair or replace the DCU power supply circuit (FUSE to DCU).**
**Perform "After-inspection work" of INFORMATION section.**

| 3 | Check the DTC detected (DCU) [HINO DX II ] |
|---|---|

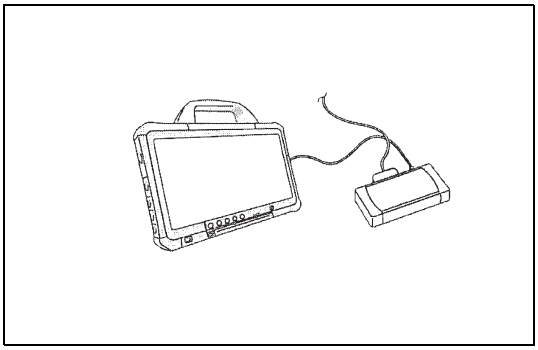

SAPH16F020400041

1. Connect the vehicle to HINO DX II .
2. Set the starter switch to the "ON" position.
3. Select [DCU] and check if the P0562 has been detected.

**Has DTC P0562 been detected?**

**YES**

**Replace the DCU. (After replacing the DCU, perform a forced regeneration.)**
**Perform "After-inspection work" of INFORMATION section.**

**NO**

**Procedure completed.**
**Perform "After-inspection work" of INFORMATION section.**

# DTC: P0563

EN01H16F02040F03001015

## DTC: P0563 Sensor supply voltage - out of range (Out of range high)

INFORMATION

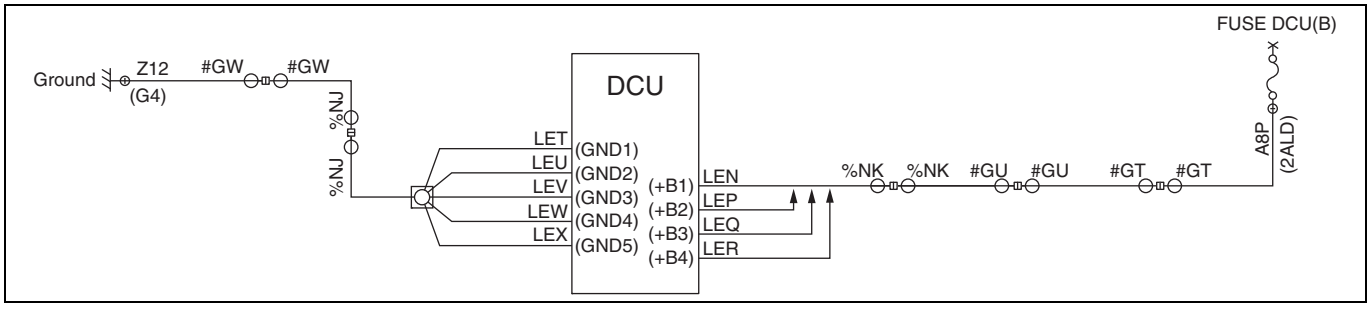


SAPH16F020400042

**1. Technical description**

- DCU receives electric power from battery.

**<Description of malfunction>**

- High voltage malfunction detected in battery voltage (DCU power circuit).

**2. DTC set condition**

(1) DTC detection condition
Starter switch ON.

(2) Judgement criteria
Battery voltage is more than 16 V.

**3. Reset condition**

- After having restored to the normal conditions.

**4. Indication, warning or system control regulation when the DTC is set.**

- MIL: ON
- DEF injection is stopped.
- NOx reduction quantity monitoring is aborted.

**5. Symptoms on the vehicle when the DTC is set**

**<Symptoms on the vehicle due to backup control (fail safe function)>**

- NOx reduction function is prevented.

**<Symptoms on the vehicle due to malfunction>**

- –

**6. Pre-inspection work**

- Check if the battery voltage is in the normal range.

**7. After-inspection work**

- Clear all past DTCs.
- Check if no DTC is stored after test drive.

**8. Estimated failure factors**

- Battery terminal harness is disconnected.
- Battery is dead.
- Harness connection is faulty.

## INSPECTION PROCEDURE: P0563

| 1 | Inspect the DCU 53P connector |
|---|---|

1. Check the connection of the DCU 53P connector (Looseness and poor contact).

**Was any failure found?**

**YES**

**Connect securely, repair if needed.**
**Perform "After-inspection work" of INFORMATION section.**

**NO**

**Go to step 2.**

| 2 | Inspect the voltage of DCU power supply |
|---|---|

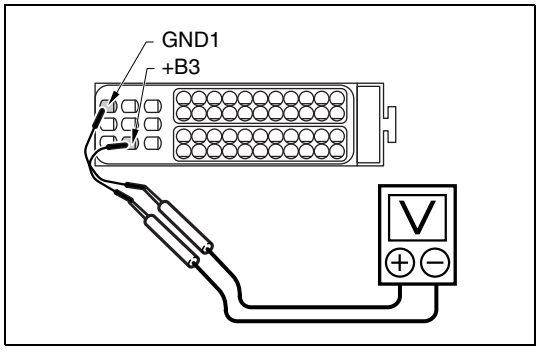

SAPH16F020400043

1. Set the starter switch to the "LOCK" position.
2. Disconnect the DCU 53P connector.
3. Connect the signal check harness and use the electrical tester to measure the voltage between the terminals of the DCU 53P vehicle-side connector.

| Measurement conditions | Tester connections | Standard values |
|---|---|---|
| Starter switch: LOCK | DCU 53P vehicle-side connector +B3 – GND1 | 9 – 16 V |

**Do the measurements meet the standard value?**

**YES**

**Go to step 3.**

**NO**

**Repair or replace DCU power supply circuit (FUSE to DCU).**
**Perform "After-inspection work" of INFORMATION section.**

| 3 | Check the DTC detected (DCU) [HINO DX ll ] |
|---|---|

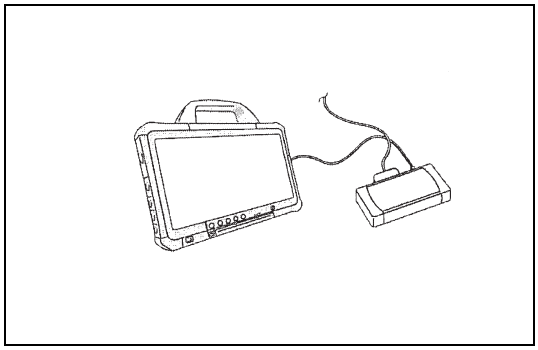

SAPH16F020400044

1. Connect the vehicle to HINO DX II .
2. Set the starter switch to the "ON" position.
3. Select [DCU] and check if P0563 has been detected.

**Has DTC P0563 been detected?**

**YES**

**Replace the DCU. (After replacing the DCU, perform a forced regeneration.)**
**Perform "After-inspection work" of INFORMATION section.**

**NO**

**Procedure completed.**
**Perform "After-inspection work" of INFORMATION section.**

# DTC: P060B

EN01H16F02040F03001016

## DTC: P060B Invalid Data Received From AC to DC Converter (DeNOx ECU)

INFORMATION

**1. Technical description**

- The AC/DC converter inside the DCU is checked inside the DCU.

**<Description of malfunction>**

- Failure of AC/DC converter inside DCU is detected.

**2. DTC set condition**

(1) DTC detection condition
Starter switch ON.
(2) Judgement criteria
Failure of AC/DC converter inside DCU is detected.

**3. Reset condition**

- After having restored to the normal conditions.

**4. Indication, warning or system control regulation when the DTC is set.**

- MIL: ON
- DEF injection is stopped.
- NOx reduction quantity monitoring is aborted.

**5. Symptoms on the vehicle when the DTC is set**

**<Symptoms on the vehicle due to backup control (fail safe function)>**

- –

**<Symptoms on the vehicle due to malfunction>**

- NOx reduction function is prevented.

**6. Pre-inspection work**

- Check if the battery voltage is in the normal range.

**7. After-inspection work**

- Clear all past DTCs.
- Check if no DTC is stored after test drive.

**8. Estimated failure factors**

- DCU malfunction

## INSPECTION PROCEDURE: P060B

| 1 | Check the DTC detected (DCU) [HINO DX II ] |
|---|---|

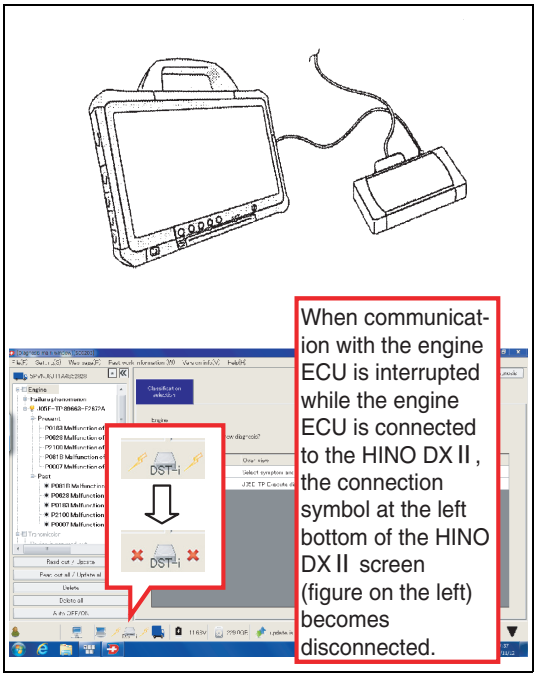


SAPH16F020400045

1. Connect the vehicle to HINO DX II .
2. Set the starter switch to the "ON" position.
3. Select [DCU] in the HINO DX II menu and check the communication between the HINO DX II and the DCU.
4. Erase the malfunction history.
5. Set the starter switch to the "LOCK" position.
6. Check if the DCU main relay is OFF in the HINO DX II menu. (This cuts off the communication between HINO DX II and the DCU.)

**HINT**
**The main relay turns OFF 1 minute after the exhaust gas temperature (SCR inlet) drops below 200 °C {392 °F}.**

7. Set the starter switch to the "ON" position.
8. Select [DCU] and check if P060B has been detected.

**Has DTC P060B been detected?**

**YES**

**Replace the DCU. (After replacing the DCU, perform a DPR forced regeneration.)**
**Perform "After-inspection work" of INFORMATION section.**

**NO**

**Procedure completed.**
**Perform "After-inspection work" of INFORMATION section.**

# DTC: P060C

EN01H16F02040F03001017

## DTC: P060C DCU abnormality

INFORMATION

**1. Technical description**

- DCU internal chip error is being checked in DCU.

**<Description of malfunction>**

- DCU internal malfunction has been detected.

**2. DTC set condition**

(1) DTC detection condition
Starter switch ON.
(2) Judgement criteria
DCU internal chip errors are judged by DCU itself.

**3. Reset condition**

- After having restored to the normal conditions.

**4. Indication, warning or system control regulation when the DTC is set.**

- MIL: ON
- DEF injection is stopped.
- NOx reduction quantity monitoring is aborted.

**5. Symptoms on the vehicle when the DTC is set**

**<Symptoms on the vehicle due to backup control (fail safe function)>**

- NOx reduction function is prevented.

**<Symptoms on the vehicle due to malfunction>**

- –

**6. Pre-inspection work**

- Check if the battery voltage is in the normal range.

**7. After-inspection work**

- Clear all past DTCs.
- Check if the DTC is stored after test drive.

**8. Estimated failure factors**

- DCU malfunction

## INSPECTION PROCEDURE: P060C

| 1 | Check the DTC detected (DCU) [HINO DX II ] |
|---|---|

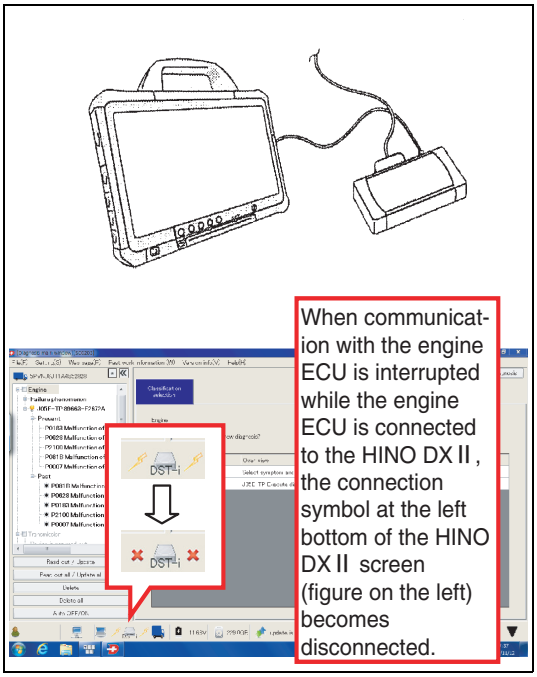


SAPH16F020400046

1. Connect the vehicle to HINO DX II .
2. Set the starter switch to the "ON" position.
3. Select [DCU] and check if HINO DX II is communicating with the DCU.
4. Erase the malfunction history.
5. Set the starter switch to the "LOCK" position.
6. Check if the DCU main relay is OFF in the HINO DX II menu. (This cuts off the communication between HINO DX II and the DCU.)

**NOTICE**
**The main relay turns OFF 1 minute after the exhaust gas temperature (SCR inlet) drops below 200 °C {392 °F}.**

7. Set the starter switch to the "ON" position.
8. Select [DCU] and check if P060C has been detected.

**Has DTC P060C been detected?**

**YES**

**Replace the DCU. (After replacing the DCU, perform a DPR forced regeneration.)**
**Perform "After-inspection work" of INFORMATION section.**

**NO**

**Erase the malfunction history and recheck the DTC.**
**Perform "After-inspection work" of INFORMATION section.**

# DTC: P062F

EN01H16F02040F03001018

## DTC: P062F Internal Control Module EEPROM Error

INFORMATION

**1. Technical description**

- DCU internal ROM is being checked in DCU.

**<Description of malfunction>**

- DCU internal malfunction has been detected.

**2. DTC set condition**

(1) DTC detection condition
Starter switch ON.
(2) Judgement criteria
DCU internal chip errors are judged by DCU itself.

**3. Reset condition**

- After having restored to the normal conditions.

**4. Indication, warning or system control regulation when the DTC is set.**

- MIL: ON
- DEF injection is stopped.
- NOx reduction quantity monitoring is aborted.

**5. Symptoms on the vehicle when the DTC is set**

**<Symptoms on the vehicle due to backup control (fail safe function)>**

- NOx reduction function is prevented.

**<Symptoms on the vehicle due to malfunction>**

- –

**6. Pre-inspection work**

- Check if the battery voltage is in the normal range.

**7. After-inspection work**

- Clear all past DTCs.
- Check if no DTC is stored after test drive.

**8. Estimated failure factors**

- DCU malfunction

**NOTICE**

**If the DCU power supply is shut off forcibly, such as by disconnecting the battery before the pump operation ends, and the DCU main relay turns off after the starter switch is turned OFF, P062F may be detected.**

## INSPECTION PROCEDURE: P062F

| 1 | Check the DTC detected (DCU) [HINO DX II ] |
|---|---|

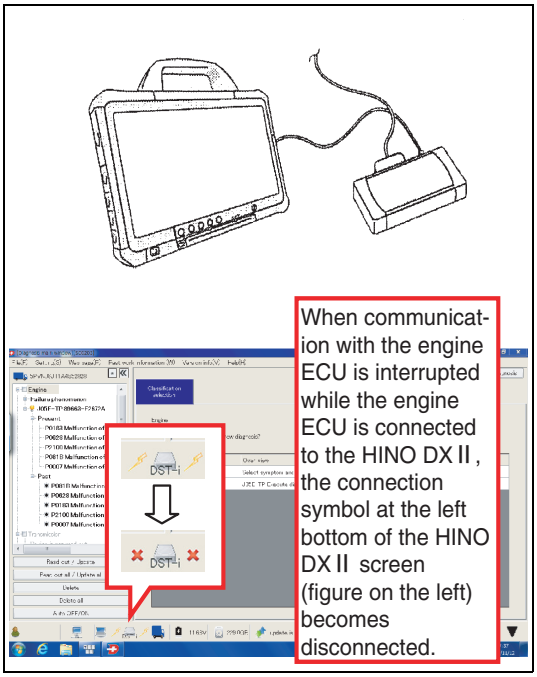


SAPH16F020400047

1. Connect the vehicle to HINO DX II .
2. Set the starter switch to the "ON" position.
3. Select [DCU] and check if the menu is communicating with the DCU.
4. Erase the malfunction history.
5. Set the starter switch to the "LOCK" position.
6. Check if the DCU main relay is OFF in the HINO DX II menu. (This cuts off the communication between HINO DX II and the DCU.)

**NOTICE**
**The main relay turns OFF 1 minute after the exhaust gas temperature (SCR inlet) drops below 200 °C {392 °F}.**

7. Set the starter switch to the "ON" position.
8. Select [DCU] and check if P062F has been detected.

**Has DTC P062F been detected?**

**YES**

**Replace the DCU. (After replacing the DCU, perform a DPR forced regeneration.)**
**Perform "After-inspection work" of INFORMATION section.**

**NO**

**Erase the malfunction history and recheck the DTC.**
**Perform "After-inspection work" of INFORMATION section.**

# DTC: P0667

EN01H16F02040F03001019

## DTC: P0667 DeNOx ECU temperature sensor 1, 2 - rationality

INFORMATION

**1. Technical description**

- Sensor values of the 2 temperature sensors in the DCU are compared.
- Malfunction is indicated if the temperature differential exceeds a set value.

**<Description of malfunction>**

- DCU temperature sensor malfunction has been detected.

**2. DTC set condition**

(1) DTC detection condition
Starter switch ON.
Battery voltage range is in the 9 V to 16 V range.

(2) Judgement criteria
The absolute value of (temperature sensor 1 - temperature sensor 2) > 15°C (59°F) for more than 10 sec.

**3. Reset condition**

- After having restored to the normal conditions.

**4. Indication, warning or system control regulation when the DTC is set.**

- MIL: ON
- DCU failure inspection is stopped.

**5. Symptoms on the vehicle when the DTC is set**

**<Symptoms on the vehicle due to backup control (fail safe function)>**

- NOx reduction function is prevented.

**<Symptoms on the vehicle due to malfunction>**

- –

**6. Pre-inspection work**

- Check if the battery voltage is in the normal range.

**7. After-inspection work**

- Clear all past DTCs.
- Check if no DTC is stored after test drive.

**8. Estimated failure factors**

- DCU (Internal temperature sensor) malfunction

## INSPECTION PROCEDURE: P0667

| 1 | Check the DTC detected (DCU) [HINO DX II ] |
|---|---|

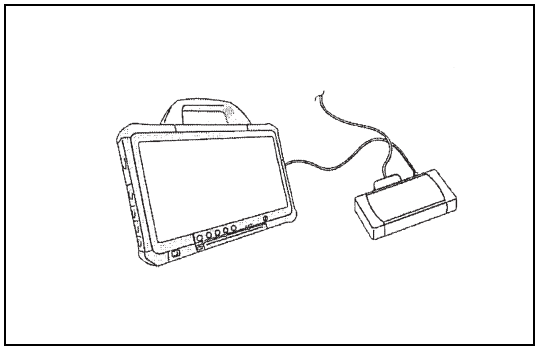

SAPH16F020400048

1. Set the starter switch to the "LOCK" position.
2. Connect the vehicle to HINO DX II .
3. Set the starter switch to the "ON" position.
4. Select [DCU] and check if P0667 has been detected.

**Has DTC P0667 been detected?**

**YES**

**Replace the DCU. (After replacing the DCU, perform a DPR forced regeneration.)**
**Perform "After-inspection work" of INFORMATION section.**

**NO**

**Erase the malfunction history. Procedure completed.**
**Perform "After-inspection work" of INFORMATION section.**

# DTC: P068A

EN01H16F02040F03001020

## DTC: P068A Malfunction of main relay

INFORMATION

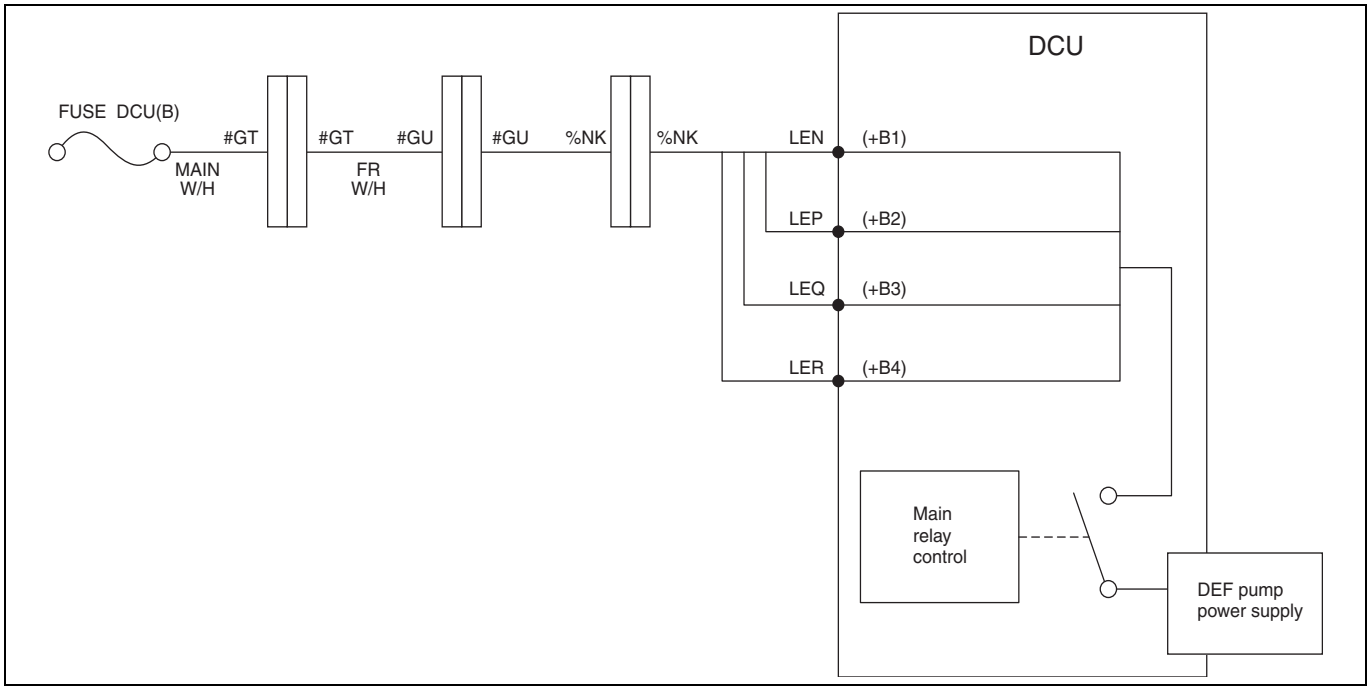


SAPH16F020400049

**1. Technical description**

- After turning off the starter switch, the DCU stays active for few minutes to evacuation DEF from lines to tank, then writes the data to the DCU ROM before shut-down.
- After ROM data writing is complete, the DCU switches the main relay (built-in into the DCU) off.
- The DCU confirms the ROM and checks that the preceding ROM data writing as being completed correctly.

**NOTICE**

**If the battery switch is turned OFF or a battery terminal is disconnected during the DCU shutdown process, Diagnostic Code P068A may be detected.**

**<Description of malfunction>**

- ROM data reading error detected.

**2. DTC set condition**

(1) DTC detection condition
Engine running.

(2) Judgement criteria
If the ROM data writing status was incomplete before the preceding DCU shut-down.

**3. Reset condition**

- DCU detects normal termination prior to operation.

**4. Indication, warning or system control regulation when the DTC is set.**

- MIL: ON
- DEF injection is stopped.
- NOx reduction quantity monitoring is aborted.

**5. Symptoms on the vehicle when the DTC is set**

**<Symptoms on the vehicle due to backup control (fail safe)>**

- NOx reduction function is prevented.

**<Symptoms on the vehicle due to malfunction>**

- –

**6. Pre-inspection work**

- Check if the battery voltage is in the normal range.

**7. After-inspection work**

- Clear all past DTCs.
- Check if no DTC is stored after test drive.

**8. Estimated failure factors**

- Battery
  - Abnormal voltage (16 V or more, 6 V or less)
  - Battery was replaced before DCU shutdown was completed.
  - Battery voltage was cut before DCU shutdown was completed.
- DCU malfunction

## INSPECTION PROCEDURE: P068A

| 1 | Check the DTC detected (DCU) |
|---|---|

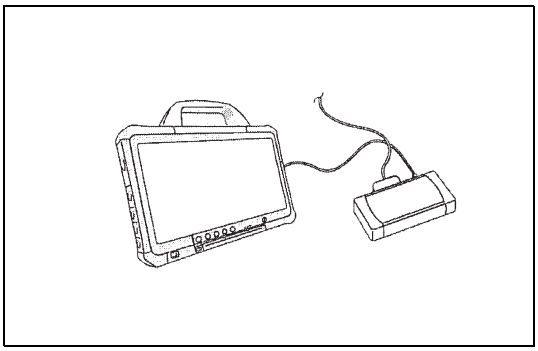

SAPH16F020400050

1. Connect the vehicle to HINO DX II .
2. Set the starter switch to the "ON" position.
3. Select [DCU] and check if any DTC other than P068A (for example, P0562) has been detected.

**NOTICE**
**If the battery switch is turned OFF or a battery terminal is disconnected during the DCU shutdown process, Diagnostic Code P068A may be detected.**

**Has a DTC other than P068A been detected?**

**YES**

**Go to the diagnosis procedure of a related DTC.**

**NO**

**Go to step 2.**

| 2 | Inspect the DCU power supply circuit |
|---|---|

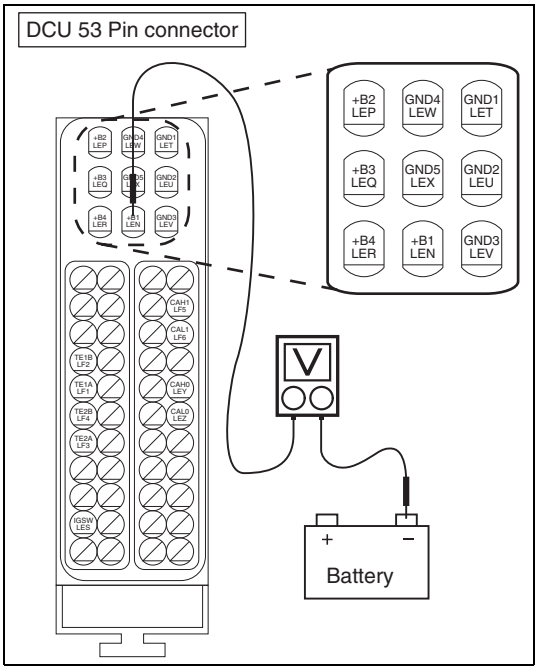


SAPH16F020400051

1. Set the starter switch to the "LOCK" position.
2. Disconnect the DCU 53P connector.
3. Set the starter switch to the "ON" position.
4. Use the electrical tester to measure the voltage between the terminals of the DCU 53P connector (Engine sub harness side) and battery minus (BAT-).

| Measurement conditions | Tester connections | Standard values |
|---|---|---|
| **Starter switch: ON** | **DCU 53P connector (Engine sub harness side)**<br>**+B1 – BAT-**<br>**+B2 – BAT-**<br>**+B3 – BAT-**<br>**+B4 – BAT-** | **9 V – 16 V (All)** |

**Do the measurements meet the standard value?**

**YES**

**Go to step 3.**

**NO**

**Repair or replace the battery power supplying circuit (harness, fuse etc).**
**Perform "After-inspection work" of INFORMATION section.**

## 3 Inspect the DCU harness

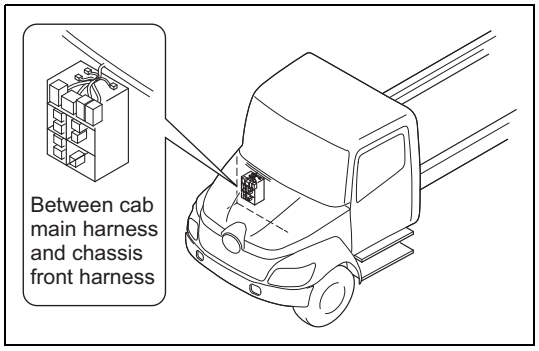


SAPH16F020400052

1. Set the starter switch to the "LOCK" position.
2. Disconnect the connector between the cab main harness and the chassis front harness.

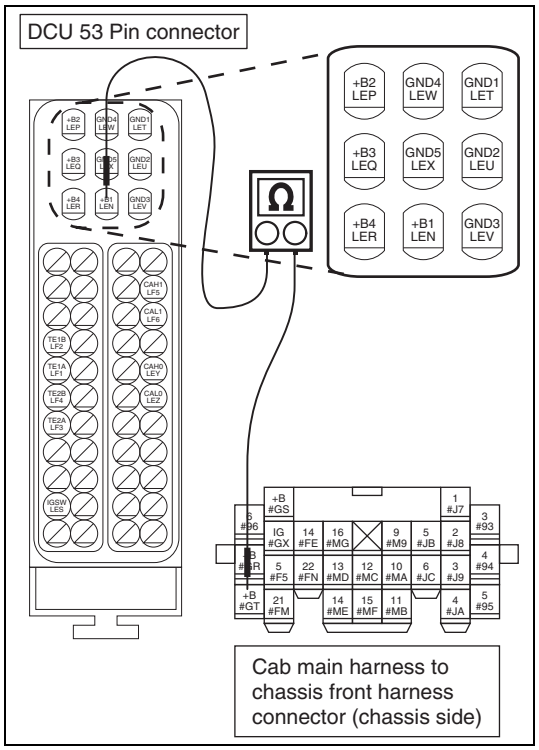


SAPH16F020400053

3. Using the electrical tester, measure the resistance between the terminals from the DCU 53P chassis side connector to the chassis side connector of the cab main harness connector to chassis front harness connector.

| Measurement conditions | Tester connections | Standard values |
|---|---|---|
| **Starter switch: LOCK** | **DCU 53P connector (vehicle-side) to cab main harness to chassis front harness connector (chassis-side)**<br>**+B1 – #GT**<br>**+B2 – #GT**<br>**+B3 – #GT**<br>**+B4 – #GT** | **1 Ω or less** |

**Do the measurements meet the standard value?**

YES

**Reconnect DCU 53P connector and cab main harness connector. Go to step 4.**

NO

**Repair or replace the battery power supplying circuit (harness).**
**Perform "After-inspection work" of INFORMATION section.**

| 4 | **Check the DTC detected (DCU) [HINO DX II ]** |
|---|---|

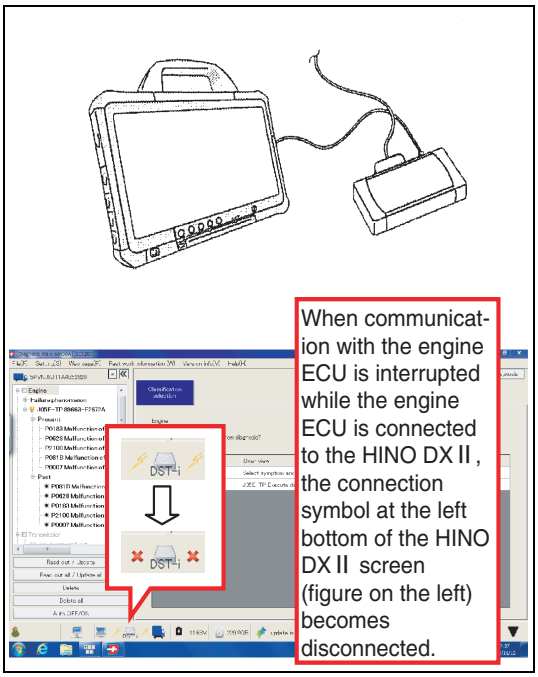


SAPH16F020400054

1. Connect the vehicle to HINO DX II .
2. Set the starter switch to the "ON" position.
3. Erase the malfunction history using HINO DX II .
4. Start the engine.
5. Select [DCU] and check if P068A has been detected.
6. Turn the starter switch OFF while still connected to HINO DX II .
7. After checking that the communication between the HINO DX II and the DCU has been disconnected, turn the starter switch ON again.
8. Select [DCU] and check if P068A has been detected.

**Has P068A been detected?**

YES

**Replace the DCU. Confirm DCU is programmed to latest software level.**
**Perform "After-inspection work" of INFORMATION section.**

NO

**Procedure completed.**
**Perform "After-inspection work" of INFORMATION section.**

# DTC: P06AD

EN01H16F02040F03001021

## DTC: P06AD DeNOx ECU temperature sensor (Out of range low)

INFORMATION

**1. Technical description**

- DCU internal temperature sensor is being checked in DCU.

**<Description of malfunction>**

- DCU internal temperature sensor malfunction is detected.

**2. DTC set condition**

(1) DTC detection condition
Starter switch ON.
Battery voltage is in the 9 V to 16 V range.

(2) Judgement criteria
DCU (Internal temperature sensor) voltage:
- Voltage of the Sensor 1 is less than 0.85 V for 0.4 sec or more.
- Voltage of the Sensor 2 is less than 0.85 V for 0.4 sec or more.

**3. Reset condition**

- After having restored to the normal conditions.

**4. Indication, warning or system control regulation when the DTC is set.**

- MIL: ON
- DCU malfunction diagnosis has been stopped.

**5. Symptoms on the vehicle when the DTC is set**

**<Symptoms on the vehicle due to backup control (fail safe function)>**

- –

**<Symptoms on the vehicle due to malfunction>**

- –

**6. Pre-inspection work**

- Check if the battery voltage is in the normal range.

**7. After-inspection work**

- Clear all past DTCs.
- Check if no DTC is stored after test drive.

**8. Estimated failure factors**

- DCU (Internal temperature sensor) malfunction.

## INSPECTION PROCEDURE: P06AD

| 1 | Check the DTC detected (DCU) [HINO DX II ] |
|---|---|

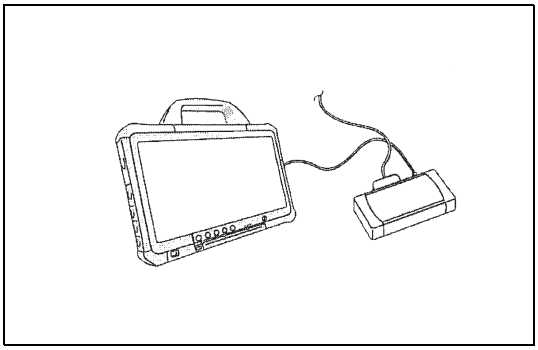

SAPH16F020400055

1. Set the starter switch to the "LOCK" position.
2. Connect the vehicle to HINO DX II .
3. Set the starter switch to the "ON" position.
4. Select [DCU] and check if P06AD has been detected.

**Has DTC P06AD been detected?**

**YES**

**Replace the DCU. (After replacing the DCU, perform a DPR forced regeneration.)**
**Perform "After-inspection work" of INFORMATION section.**

**NO**

**Erase the malfunction history. Procedure completed.**
**Perform "After-inspection work" of INFORMATION section.**

# DTC: P06AE

EN01H16F02040F03001022

## DTC: P06AE DeNOx ECU temperature sensors - out of range (Out of range high)

INFORMATION

**1. Technical description**

- DCU internal temperature sensor is being checked in DCU.

**<Description of malfunction>**

- DCU internal temperature sensor malfunction is detected.

**2. DTC set condition**

(1) DTC detection condition
Starter switch ON.
Battery voltage is in the 9 V to 16 V range.

(2) Judgement criteria
DCU (Internal temperature sensor) voltage:
- Voltage of the Sensor 1 is more than 2.0 V for 0.4 sec or more.
- Voltage of the Sensor 2 is more than 2.0 V for 0.4 sec or more.

**3. Reset condition**

- After having restored to the normal conditions.

**4. Indication, warning or system control regulation when the DTC is set.**

- MIL: ON
- DCU malfunction diagnosis has been stopped.

**5. Symptoms on the vehicle when the DTC is set**

**<Symptoms on the vehicle due to backup control (fail safe function)>**

- –

**<Symptoms on the vehicle due to malfunction>**

- –

**6. Pre-inspection work**

- Check if the battery voltage is in the normal range.

**7. After-inspection work**

- Clear all past DTCs.
- Check if no DTC is stored after test drive.

**8. Estimated failure factors**

- DCU (Internal temperature sensor) malfunction.

## INSPECTION PROCEDURE: P06AE

| 1 | Check the DTC detected (DCU) [HINO DX II ] |
|---|---|

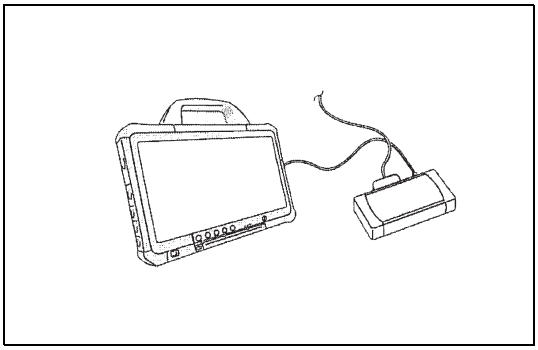

SAPH16F020400056

1. Set the starter switch to the "LOCK" position.
2. Connect the vehicle to HINO DX II .
3. Set the starter switch to the "ON" position.
4. Select [DCU] and check if P06AE has been detected.

**Has DTC P06AE been detected?**

**YES**

**Replace the DCU. (After replacing the DCU, perform a DPR forced regeneration.)**
**Perform "After-inspection work" of INFORMATION section.**

**NO**

**Erase the malfunction history. Procedure completed.**
**Perform "After-inspection work" of INFORMATION section.**

# DTC: P142A

EN01H16F02040F03001023

## DTC: P142A DEF pump temperature sensor (Out of range)

INFORMATION

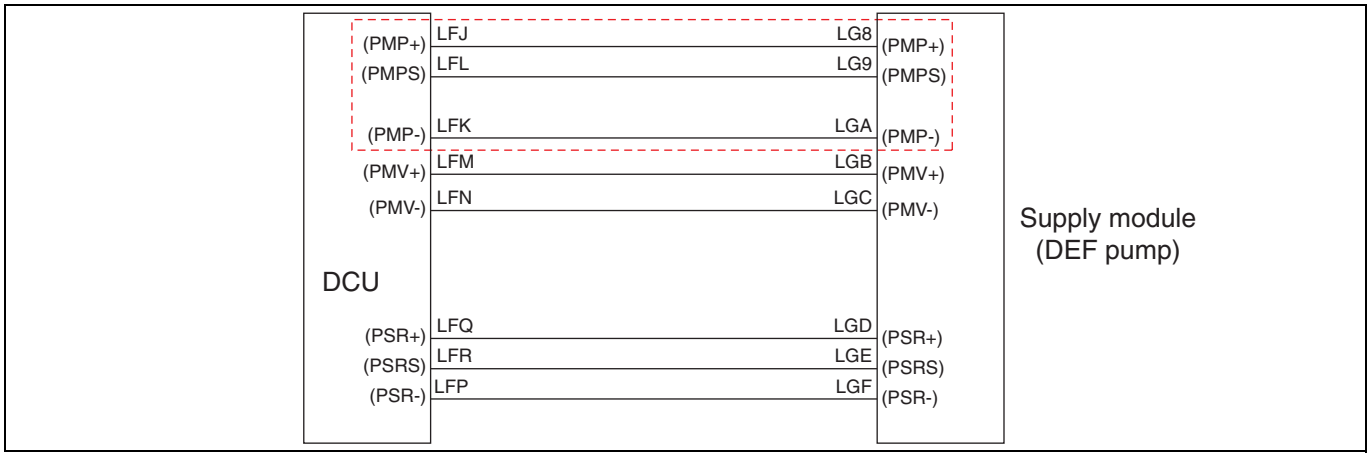


SAPH16F020400057

**1. Technical description**

- There are 2 temperature sensors in the DEF pump.
- The DEF pump temperature sensor is judged with the DEF pump temperature sensor voltage by the DCU via harness.

**<Description of malfunction>**

- Failure of temperature sensor inside DEF pump is detected.

**2. DTC set condition**

(1) DTC detection condition
Engine ON.

(2) Judgement criteria
DEF Supply module Temperature Sensor duty:– Temperature sensor 1 duty: Below 15% for 5 sec. or longer– Temperature sensor 1 duty: Over 85% for 5 sec. or longer– Temperature sensor 2 duty: Below 15% for 5 sec. or longer– Temperature sensor 2 duty: Over 85% for 5 sec. or longer

**3. Reset condition**

- After having restored to the normal conditions.

**4. Indication, warning or system control regulation when the DTC is set.**

- MIL: ON

**5. Symptoms on the vehicle when the DTC is set**

**<Symptoms on the vehicle due to backup control (fail safe function)>**

- –

**<Symptoms on the vehicle due to malfunction>**

- Control will not work properly if the DEF freezes.

**6. Pre-inspection work**

- Check if the battery voltage is in the normal range.

**7. After-inspection work**

- Clear all past DTCs.
- Check if no DTC is stored after test drive.

**8. Estimated failure factors**

- Disconnection or short-circuit in sensor harness
- Irregular contact (disconnection or poor fit of connector)
- Malfunction of DEF pump temperature sensor

## INSPECTION PROCEDURE: P142A

| 1 | Check the DTC detected 1 (DCU) [HINO DX II ] |
|---|---|

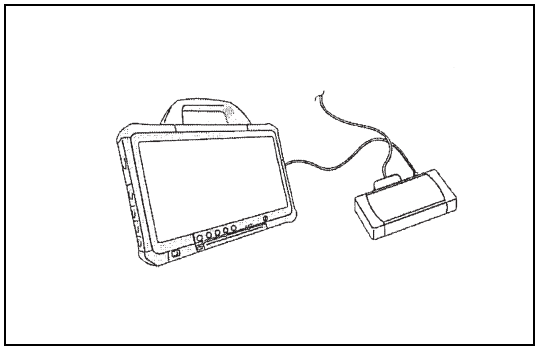

SAPH16F020400058

1. Set the starter switch to the "LOCK" position.
2. Connect the vehicle to HINO DX II .
3. Set the starter switch to the "ON" position.
4. Select [DCU] and check if P20B2 has been detected.

**Has DTC P20B2 been detected?**

**YES**

**Go to diagnosis procedure of the related DTC.**

**NO**

**Go to step 2.**

| 2 | Check the DTC detected 2 (DCU) [HINO DX II ] |
|---|---|

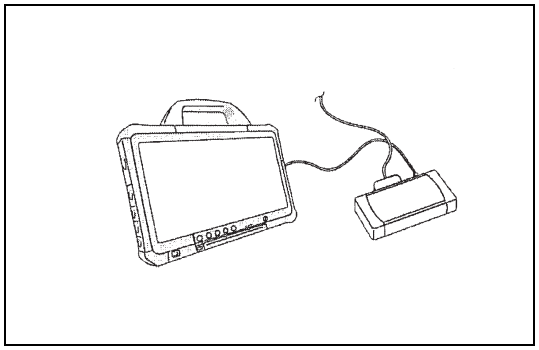

SAPH16F020400059

1. Check if P060C has been detected in [DCU].

**Has DTC P060C been detected?**

**YES**

**Go to diagnosis procedure of the related DTC.**

**NO**

**Go to step 3.**

| 3 | Check the DTC detected 3 (DCU) [HINO DX II ] |
|---|---|

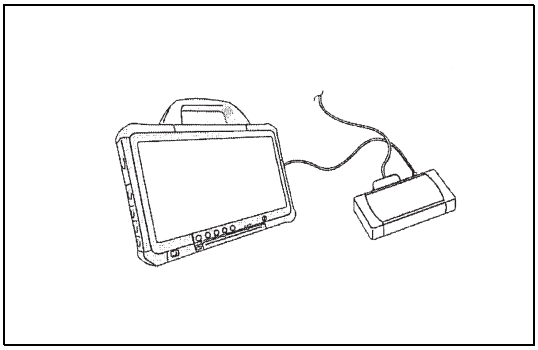

SAPH16F020400060

1. Check if any following DTCs have been detected in [DCU].
   P208A, P208B, P208C or P208D

**Have any DTCs (P208A, P208B, P208C or P208D) been detected?**

**YES**

**Go to diagnosis procedure of the related DTC.**

**NO**

**Go to step 4.**

| 4 | Check the temperature detected by the DEF pump temperature sensor [HINO DX II ] |
|---|---|

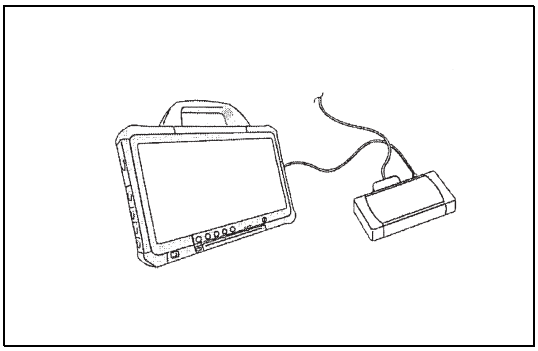

SAPH16F020400061

1. Keep the engine off until you can touch the surface of the DEF pump and confirm that there is no difference between the pump temperature and the outside temperature.
2. Connect the vehicle to HINO DX II .
3. Set the starter switch to the "ON" position.
4. Select [DCU].
5. Select [DEF pump temperature #1] and [DEF pump temperature #2] on [Data monitor Setting], and start the monitor.
6. Compare the monitor value and the ambient temperature.

**NOTICE**

**The information of DEF pump internal temperature is transmitted to the DCU via the electrical circuit which is commonly used with the information of DEF pump opening. Therefore, DEF pump internal temperature displayed on the HINO DX II will not be updated while the DEF pump is activated. The current temperature will be updated 6 seconds after the starter switch has been turned on.**

| Standard values |
|---|
| Difference between monitor value and ambient temperature: Within ± 15 °C {± 59 °F} |

**Is the difference between the monitor value and ambient temperature within ± 15 °C {± 59 °F}?**

YES

**Go to step 5.**

NO

**Go to step 12.**

| 5 | Inspect the exhaust pipe/muffler |
|---|---|

1. Check the exhaust pipe/muffler and make sure it has no cracks or exhaust leaks (soot leaks), and verify that coupling flanges are properly tightened.

**Was any failure found?**

YES

**Repair or replace the exhaust pipe/muffler.**
**Perform "After-inspection work" of INFORMATION section.**

NO

**Go to step 6.**

| 6 | Check if DEF heater installation has been modified |
|---|---|

1. Check if the DEF heater installation in the DEF pump has been modified.

**Has the electric heater installation been modified?**

YES

**Remove the DEF heater. (There may be DEF temperature problems due to the DEF heater.)**
**Perform "After-inspection work" of INFORMATION section.**

NO

**Go to step 7.**

| 7 | Inspect the DEF pump connector |
|---|---|

1. Check the DEF connector connection (fit, faulty contact) and the state of the terminal (bent pin, electrolytic corrosion, water entry).

**Was any failure found?**

YES

**Connect securely, repair if needed.**
**Perform "After-inspection work" of INFORMATION section.**

NO

**Go to step 8.**

| 8 | Inspect the power supply of the DEF pump |
|---|---|

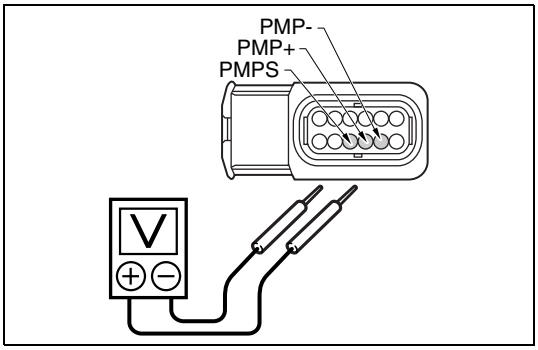


SAPH16F020400062

1. Set the starter switch to the "LOCK" position.
2. Disconnect DEF pump connector.
3. Set the starter switch to the "ON" position.
4. Using an electrical tester, measure the voltage between each terminal in the DEF pump vehicle-side connector while gently jiggling the harness.

| Measurement conditions | Tester connections | Standard values |
|---|---|---|
| Starter switch: ON | DEF pump vehicle-side connector<br>(1) PMP- – PMP+<br>(2) PMP- – PMPS<br>(3) PMP+ – PMPS | (1) 12 V<br>(2) 2.82 – 4.03 V<br>(3) 7.97 – 9.18 V |

**Do the measurements meet the standard value?**

**YES**

**Go to step 11.**

**NO**

**Go to step 9.**

| 9 | Check for short-circuit in wire harness of DEF pump (temperature sensor) |
|---|---|

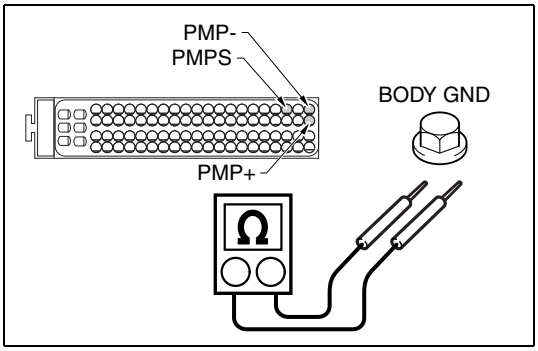


SAPH16F020400063

1. Set the starter switch to the "LOCK" position.
2. Disconnect the DCU 86P connector and the DEF pump connector.
3. Connect the signal check harness and use the electrical tester to measure the resistance between the terminals of the DCU 86P vehicle-side connector and the ground.

| Measurement conditions | Tester connections | Standard values |
|---|---|---|
| Starter switch: ON | DCU 86P vehicle-side connector (signal check harness)<br>PMP+ – Ground<br>PMP- – Ground<br>PMPS – Ground | ∞ Ω |

**Do the measurements meet the standard value?**

**YES**

**Go to step 10.**

**NO**

**Repair or replace the harness.**
**Perform "After-inspection work" of INFORMATION section.**

## 10 Check for disconnection in wire harness of DEF pump (temperature sensor)

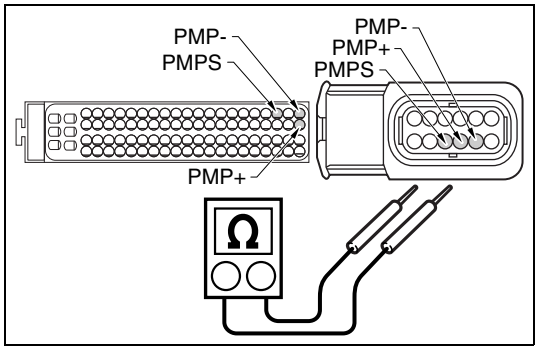


SAPH16F020400064

1. Use the electrical tester to measure the resistance between each terminal of the DEF pump vehicle-side connector and the DCU 86P vehicle-side connector (signal check harness).

| Measurement conditions | Tester connections | Standard values |
|---|---|---|
| Starter switch: ON | DEF pump vehicle-side connector – DCU 86P vehicle-side connector (signal check harness)<br>PMP+ – PMP+<br>PMP- – PMP-<br>PMPS – PMPS | Less than 1 Ω |

**Do the measurements meet the standard value?**

**YES**

**Replace the DCU.**
**Perform "After-inspection work" of INFORMATION section.**

**NO**

**Repair or replace the harness.**
**Perform "After-inspection work" of INFORMATION section.**

| 11 | Check the DEF pump pressure |
|---|---|

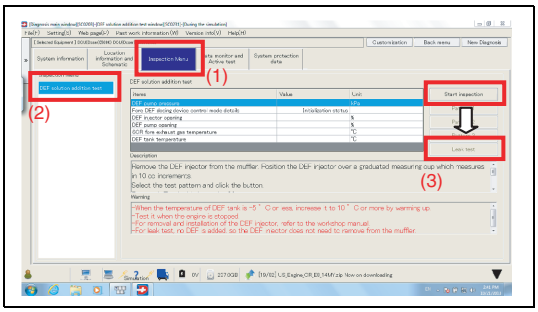


SAPH16F020400065

1. Set the starter switch to the "LOCK" position.
2. Connect the vehicle to HINO DX II .
3. Set the starter switch to the "ON" position.
4. Select [DCU].
5. Perform [Leak test] from the [DEF solution addition test]. And read the DEF pump pressure on the DX II screen.
   <Inspection procedure>
   (1) Select [Inspection Menu].
   (2) Select [DEF solution addition test].
   (3) Click [Start inspection] and then [leak test].

| Measurement conditions | Standard values |
|---|---|
| **Starter switch: ON** | **The DEF pressure is stable in the 850 to 950 kPa {123.3 to 137.8 psi} range for 60 seconds.** |

**Do the measurements meet the standard value?**

**YES**

**Procedure completed.**
**Perform "After-inspection work" of INFORMATION section.**

**NO**

**Replace the DCU.**
**Perform "After-inspection work" of INFORMATION section.**

| 12 | Check the DEF pump opening [HINO DX II ] |
|---|---|

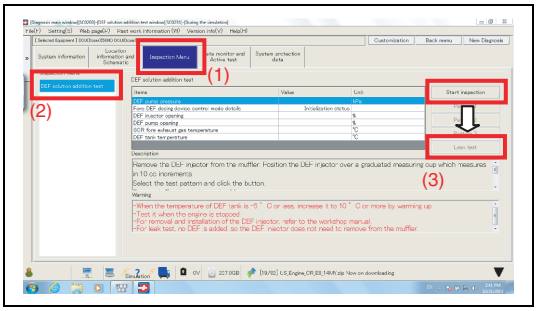


SAPH16F020400066

1. Set the starter switch to the "LOCK" position.
2. Connect the vehicle to HINO DX II .
3. Set the starter switch to the "ON" position.
4. Select "DCU".
5. Perform [Leak test] from the [DEF solution addition test]. And confirm the "DEF pump opening" value on the DX II screen once the DEF pressure has stabilized between 850 - 950 kPa {123.3 - 137.8 psi}.
   <Inspection procedure>
   (1) Select [Inspection Menu].
   (2) Select [DEF solution addition test].
   (3) Click [Start inspection] and then [leak test].

**HINT**
**The information of DEF pump internal temperature will be transmitted to the DCU, via the shared circuit with the information of DEF pump opening, when the pump is not in operation.**
**This test will determine that the circuit (DCU) is working properly if the information of DEF pump opening is normally recognized when the DEF pump motor is functioning normally (DEF pressure is stable).**

| Standard values |
|---|
| 16 ± 6.5 % |

**Do the measurements meet the standard value?**

**YES**

**Replace the DEF pump.**
**(Since the DCU is normally recognizing the information of DEF pump opening, the circuit (DCU) is normal and the DEF pump internal temperature sensor is deemed to be malfunctioning.) After replacing the pump, return to step 4.**

**NO**

**Replace the DCU.**
**(Since the DCU is not normally recognizing the information of DEF pump opening, even though the DEF pump motor is operating normally, the DCU is deemed to be malfunctioning.) After replacing the DCU, return to step 4.**

# DTC: P142B

EN01H16F02040F03001024

## DTC: P142B DEF pump temperature sensor - rationality

INFORMATION

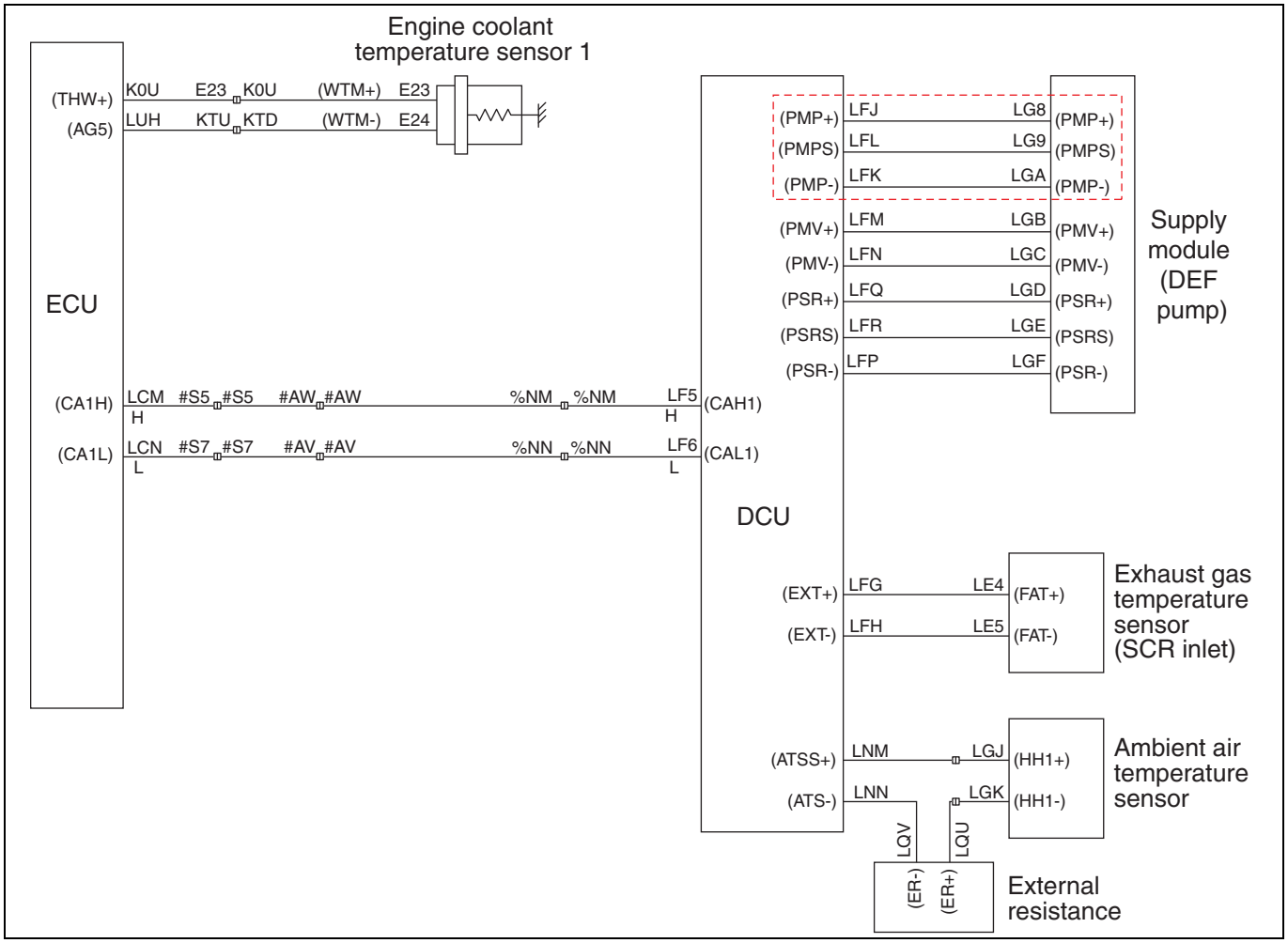


SAPH16F020400067

**1. Technical description**

- DEF pump temperature sensor checks for validity by comparing with the outside temperature.
- DEF pump temperature sensor checks for validity by monitoring whether the temperature rises when the coolant shutoff valve is released (when DEF defrosts).
- While the engine is cold, engine coolant will be sent to the pump to defrost the DEF.

**<Description of malfunction>**

- Failure of temperature sensor inside DEF pump is detected.

**2. DTC set condition**

(1) DTC detection condition
When the starter switch is ON, difference among the outside temperature, exhaust temperature (SCR inlet) and coolant temperature is within 8 °C {46.4 °F}.
The coolant shutoff valve is released (DEF defrosts). Coolant temperature is over 40 °C {104 °F}.
The above condition continues for 10 minutes or longer.

(2) Judgement criteria
Difference between the DEF pump temperature and the outside temperature: over 22 °C {71.6 °F}
Rise in the DEF pump temperature: less than 1.5 °C {34.7 °F}

**3. Reset condition**

- When the starter switch is ON and the difference among the outside temperature, exhaust temperature, and coolant temperature is less than 8 °C {46.7 °F}, the difference from the coolant temperature will be less than 22 °C {71.6 °F}.
- When the shutoff valve is open (defrosting), the temperature rise after 10 minutes will be at least 2 °C {35.6 °F}.

**4. Indication, warning or system control regulation when the DTC is set.**

- MIL: ON

**5. Symptoms on the vehicle when the DTC is set**

**<Symptoms on the vehicle due to backup control (fail safe function)>**

- –

**<Symptoms on the vehicle due to malfunction>**

- Control will not work properly if the DEF freezes.

**6. Pre-inspection work**

- Check if the battery voltage is in the normal range.

**7. After-inspection work**

- Clear all past DTCs.
- Check if no DTC is stored after test drive.

**8. Estimated failure factors**

- Coolant shutoff valve: Stuck closed
- Coolant piping: Clogging or leaks
- Malfunction of DEF pump temperature sensor
- Malfunction of ambient air temperature sensor
- Malfunction of exhaust gas temperature sensor (SCR inlet)
- Malfunction of engine coolant temperature sensor

**NOTICE**
**Also see the malfunction codes of the shutoff valve.**

## INSPECTION PROCEDURE: P142B

| 1 | Inspect the ambient air temperature sensor connector |
|---|---|

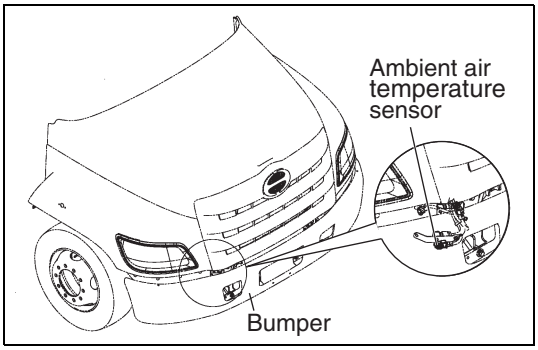

SAPH16F020400068

1. Check the connection of the ambient air temperature sensor connector (Looseness and poor contact).

**Was any failure found?**

**YES**

**Connect securely, repair if needed.**
**Perform "After-inspection work" of INFORMATION section.**

**NO**

**Go to step 2.**

| 2 | Inspect the connector of the external resistor |
|---|---|

1. Check the connection of the external resistor connector (Looseness and poor contact).

**Was any failure found?**

**YES**

**Connect securely, repair if needed.**
**Perform "After-inspection work" of INFORMATION section.**

**NO**

**Go to step 3.**

| 3 | Inspect the DCU 86P connector |
|---|---|

1. Check the connection of the DCU 86P connector (Looseness and poor contact).

**Was any failure found?**

**YES**

**Connect securely, repair if needed.**
**Perform "After-inspection work" of INFORMATION section.**

**NO**

**Go to step 4.**

| 4 | Inspect the ambient air temperature sensor |
|---|---|

1. Check the installation of the ambient air temperature sensor.
2. Make sure there is no dirt or damage to the ambient temperature sensor.

**Was any failure found?**

**YES**

**Clean the ambient air temperature sensor and install it properly. If damaged, replace the ambient air temperature sensor.**
**Perform "After-inspection work" of INFORMATION section.**

**NO**

**Go to step 5.**

| 5 | Inspect the ambient air temperature sensor unit |
|---|---|

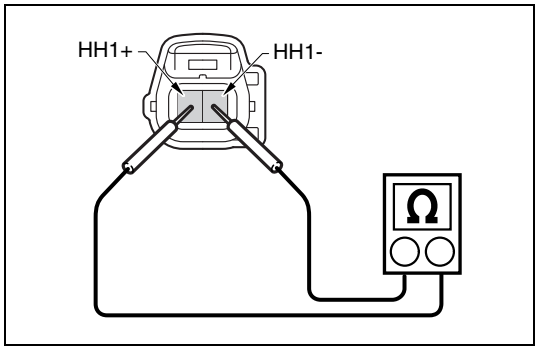

SAPH16F020400069

1. Set the starter switch to the "LOCK" position.
2. Disconnect the ambient air temperature sensor connector.
3. Use the electrical tester to measure the resistance between the terminals of the ambient air temperature sensor.

| Measurement conditions | Tester connections | Standard values |
|---|---|---|
| Starter switch: LOCK | Ambient air temperature sensor HH1+ – HH1- | 25 °C {77 °F}: 1.7 kΩ |

**Do the measurements meet the standard value?**

**YES**

**Go to step 6.**

**NO**

**Replace the ambient air temperature sensor.**
**Perform "After-inspection work" of INFORMATION section.**

| 6 | Inspect the external resistor unit |
|---|---|

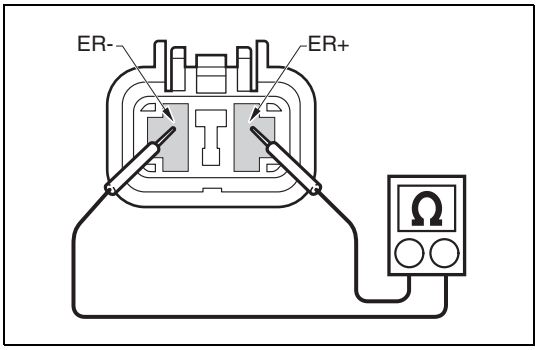


SAPH16F020400070

1. Disconnect the external resistor connector.
2. Use the electrical tester to measure the resistance between the terminals of the external resistor.

| Measurement conditions | Tester connections | Standard values |
|---|---|---|
| Starter switch: LOCK | External resistor ER+ – ER- | 2 kΩ |

**Do the measurements meet the standard value?**

**YES**

**Go to step 7.**

**NO**

**Replace the external resistor.**
**Perform "After-inspection work" of INFORMATION section.**

| 7 | Inspect disconnection of the ambient air temperature sensor harness |
|---|---|

1. Connect the ambient air temperature sensor connector.
2. Disconnect the DCU 86P connector.
3. Connect the signal check harness, and use the electrical tester to measure the resistance between the terminals of the DCU 86P vehicle-side connector.

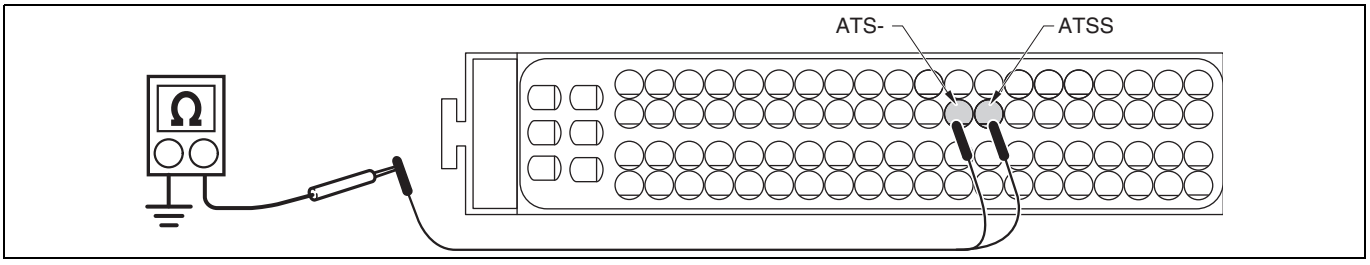


SAPH16F020400071

| Measurement conditions | Tester connections | Standard values |
|---|---|---|
| Starter switch: LOCK | DCU 86P vehicle-side connector ATSS – ATS- | 25 °C {77 °F}: 3.7 kΩ |

**Do the measurements meet the standard value?**

| YES | NO |
|---|---|
| **Go to step 8.** | **Replace the external resistor.<br>Perform "After-inspection work" of INFORMATION section.** |

| 8 | Inspect the exhaust gas temperature sensor (SCR inlet) connector |
|---|---|

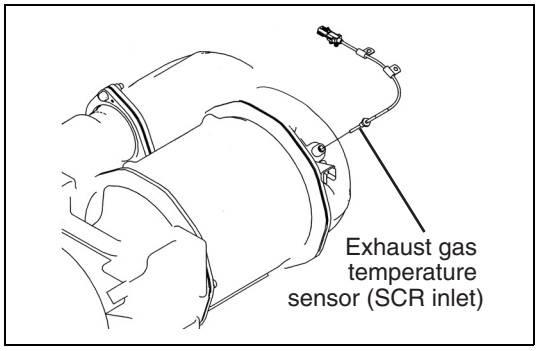


SAPH16F020400072

1. Check the connection of the exhaust gas temperature sensor (SCR inlet) connector (Looseness and poor contact).

**Was any failure found?**

| YES | NO |
|---|---|
| **Connect securely, repair if needed.<br>Perform "After-inspection work" of INFORMATION section.** | **Go to step 9.** |

| 9 | Inspect the exhaust gas temperature sensor (SCR inlet) |
|---|---|

1. Check the installation of the exhaust gas temperature sensor (SCR inlet).
2. Make sure there is no dirt or damage to the exhaust gas temperature sensor (SCR inlet).

**Was any failure found?**

| YES | NO |
|---|---|
| **Clean the exhaust gas temperature sensor (SCR inlet) and install it properly. If damaged, replace the exhaust gas temperature sensor (SCR inlet).<br>Perform "After-inspection work" of INFORMATION section.** | **Go to step 10.** |

| 10 | Inspect the exhaust gas temperature sensor (SCR inlet) unit |
|---|---|

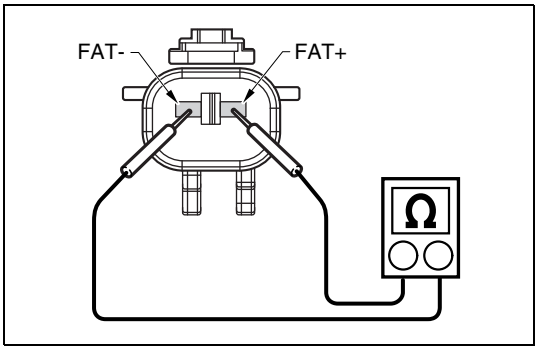


SAPH16F020400073

1. Set the starter switch to the "LOCK" position.
2. Disconnect the exhaust gas temperature sensor (SCR inlet) connector.
3. Use the electrical tester to measure the resistance between the terminals of the exhaust gas temperature sensor (SCR inlet).

| Measurement conditions | Tester connections | Standard values |
|---|---|---|
| **Starter switch: LOCK** | **Exhaust gas temperature sensor (SCR inlet) FAT+ – FAT-** | **20 °C {68 °F}: 220 Ω** |

**Do the measurements meet the standard value?**

**YES**

**Go to step 11.**

**NO**

**Replace the exhaust gas temperature sensor (SCR inlet).**
**Perform "After-inspection work" of INFORMATION section.**

| 11 | Inspect the engine coolant temperature sensor connector |
|---|---|

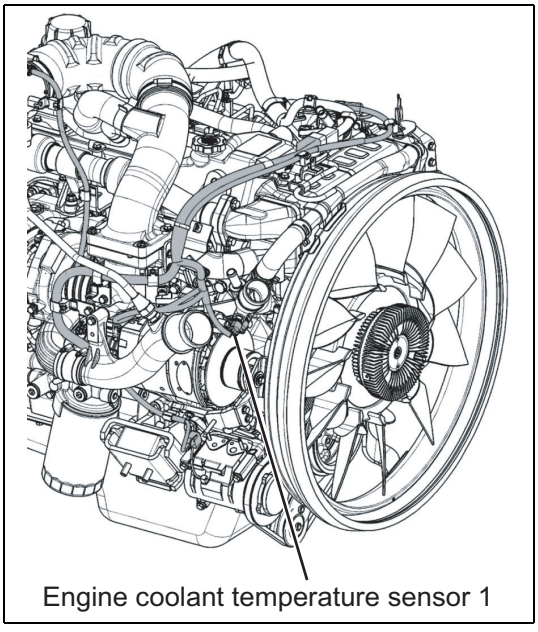


SAPH16F020400074

1. Check the connection of the engine coolant temperature sensor connector (Looseness and poor contact).

**Was any failure found?**

**YES**

**Connect securely, repair if needed.**
**Perform "After-inspection work" of INFORMATION section.**

**NO**

**Go to step 12.**

## 12 Inspect the engine coolant temperature sensor

1. Check the installation of the engine coolant temperature sensor.
2. Make sure there is no dirt or damage to the engine coolant temperature sensor.

**Was any failure found?**

**YES**

**Clean the engine coolant temperature sensor and install it properly. If damaged, replace the engine coolant temperature sensor.**
**Perform "After-inspection work" of INFORMATION section.**

**NO**

**Go to step 13.**

## 13 Inspect the engine coolant temperature sensor unit

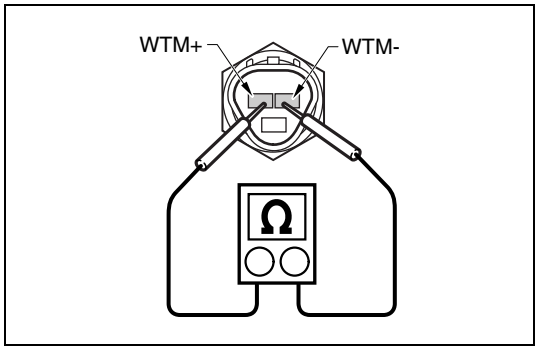


SAPH16F020400075

1. Disconnect the engine coolant temperature sensor connector.
2. Use the electrical tester to measure the resistance between the terminals of the engine coolant temperature sensor.

| Measurement conditions | Tester connections | Standard values |
|---|---|---|
| Starter switch: LOCK | Engine coolant temperature sensor WTM+ – WTM- | 20 °C {68 °F}: 2.32 – 2.59 kΩ<br>80 °C {176 °F}: 0.310 – 0.326 kΩ |

**Do the measurements meet the standard value?**

**YES**

**Go to step 14.**

**NO**

**Replace the engine coolant temperature sensor.**
**Perform "After-inspection work" of INFORMATION section.**

| 14 | Check the operation of the coolant shutoff valve [HINO DX II ] |
|---|---|

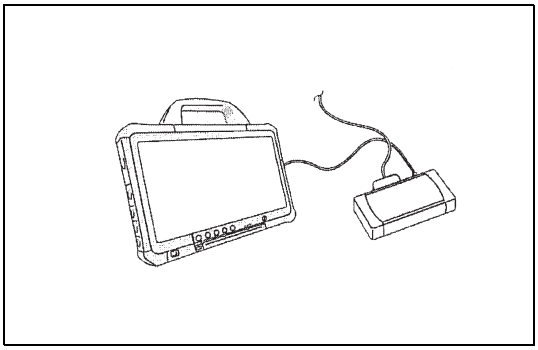

SAPH16F020400076

1. Connect the vehicle to HINO DX II .
2. Set the starter switch to the "ON" position.
3. Select [DCU] from the menu.
4. Select [Coolant shutoff valve] from the [Active test Setting] menu and operate the coolant shutoff valve.
   (1) When the valve is open: Check if the pressure inside the downstream coolant line is rising by feeling the line with your hand.
   (2) When the valve is closed: Check if the pressure inside the downstream coolant line is dropping by feeling the line with your hand.

**⚠ CAUTION**
**Be careful not to burn yourself when the coolant is hot.**

**Is operation normal?**

**YES**

**Go to step 15.**

**NO**

**Replace the coolant shutoff valve.**
**Perform "After-inspection work" of INFORMATION section.**

| 15 | Inspect the engine coolant lines & hoses |
|---|---|

1. Make sure there are no leaks in the engine cooling system (lines and hoses).
2. Check the engine cooling system (lines and hoses) and check if there are no disconnections, clogging, punctures, or cracks.

**Was any failure found?**

**YES**

**Repair or replace the faulty part.**
**Perform "After-inspection work" of INFORMATION section.**

**NO**

**Go to step 16.**

| 16 | Inspect the DEF pump |
|---|---|

1. Disconnect the coolant hoses (upstream and downstream) from the DEF pump.
2. Blow air from one side and make sure it comes out from the other side.

**Was any failure found?**

**YES**

**Replace the DEF pump.**
**Perform "After-inspection work" of INFORMATION section.**

**NO**

**Replace the coolant shutoff valve.**
**Perform "After-inspection work" of INFORMATION section.**

# DTC: P14C1

EN01H16F02040F03001025

## DTC: P14C1 Exhaust gas temperature sensor (SCR inlet) - rationality

INFORMATION (at engine start)

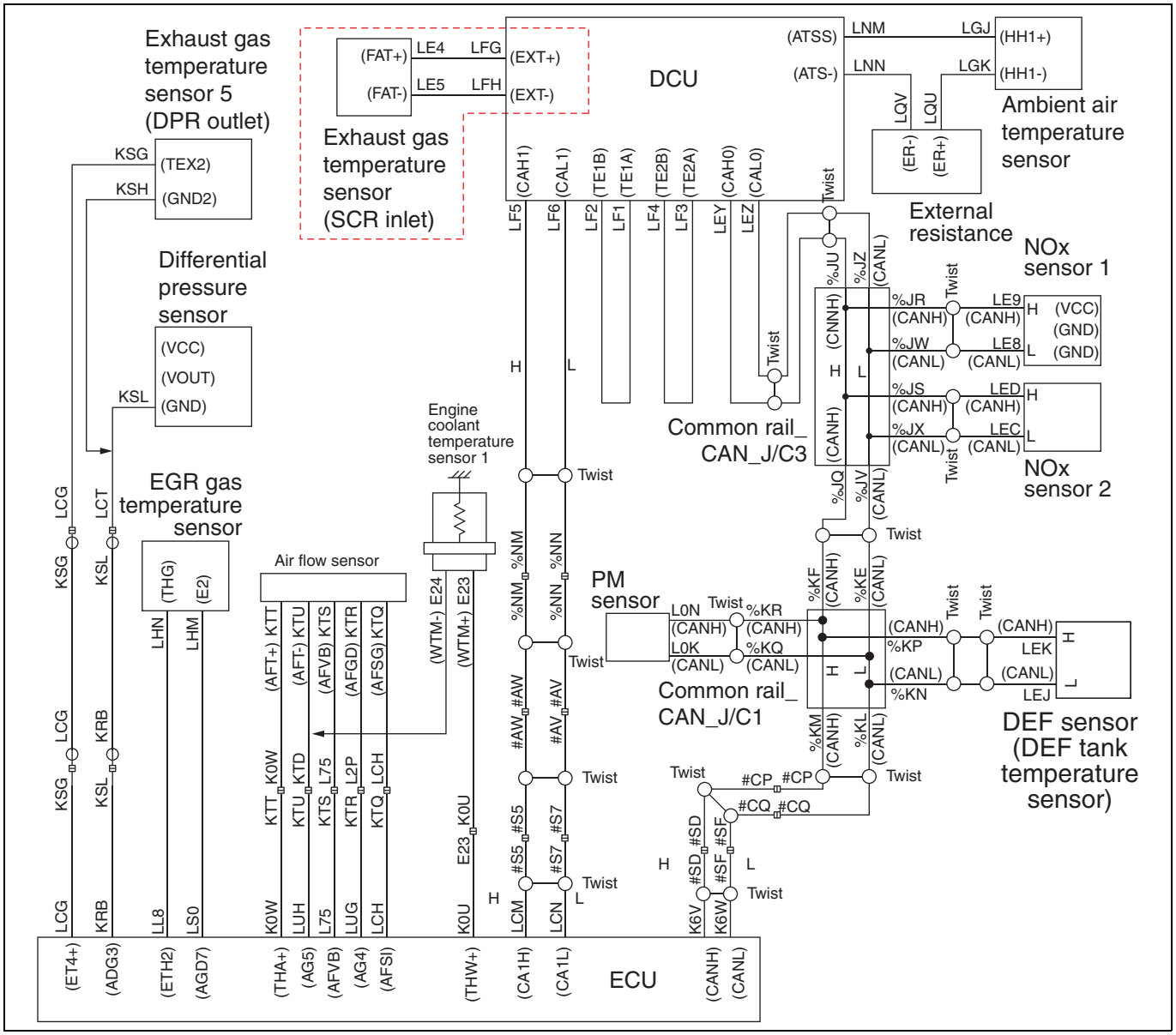


SAPH16F020400077

### 1. Technical description

- Exhaust gas temperature sensor (SCR inlet) rationality is checked by temperature model calculated from exhaust gas temperature sensor 5 (DPR outlet).

**<Description of malfunction>**

- Failure of exhaust gas temperature sensor (SCR inlet) is detected.

**2. DTC set condition**

(1) DTC detection condition

- Starter switch ON.
- Difference of Ambient air temperature between engine coolant temperature (from Engine ECU): ≤ 8 °C {46.4 °F}
- Difference of DEF tank temperature between Ambient air temperature: ≤ 8 °C {46.4 °F}
- Difference of engine coolant temperature (from Engine ECU) between DEF tank temperature: ≤ 8 °C {46.4 °F}
- At least 10 seconds has elapsed since engine startup
- Max engine coolant temperature (from Engine ECU) at previous driving cycle > 70 °C {158 °F}

(2) Judgement criteria

Difference between exhaust gas temperature sensor (SCR inlet) and ambient air temperature: > 100 °C {212 °F} for 1sec.

**3. Reset condition**

- After having restored to the normal conditions.

**4. Indication, warning or system control regulation when the DTC is set.**

- MIL: ON
- DEF injection is restricted.
- NOx reduction quantity monitoring is aborted.

**5. Symptoms on the vehicle when the DTC is set**

**<Symptoms on the vehicle due to backup control (fail safe function)>**

- NOx reduction function is prevented.

**<Symptoms on the vehicle due to malfunction>**

- –

**6. Pre-inspection work**

- Check if the battery voltage is in the normal range.

**7. After-inspection work**

- Clear all past DTCs.
- Check if no DTC is stored after test drive.

**8. Estimated failure factors**

- Poor connector contact or faulty connector fit
- Failure of exhaust gas temperature sensor (SCR inlet)
- Failure of ambient air temperature sensor
- Failure of exhaust gas temperature sensor 5 (DPR outlet)
- Failure of engine coolant temperature sensor

## DTC: P14C1 Exhaust gas temperature sensor (SCR inlet) - rationality

INFORMATION (at engine running)

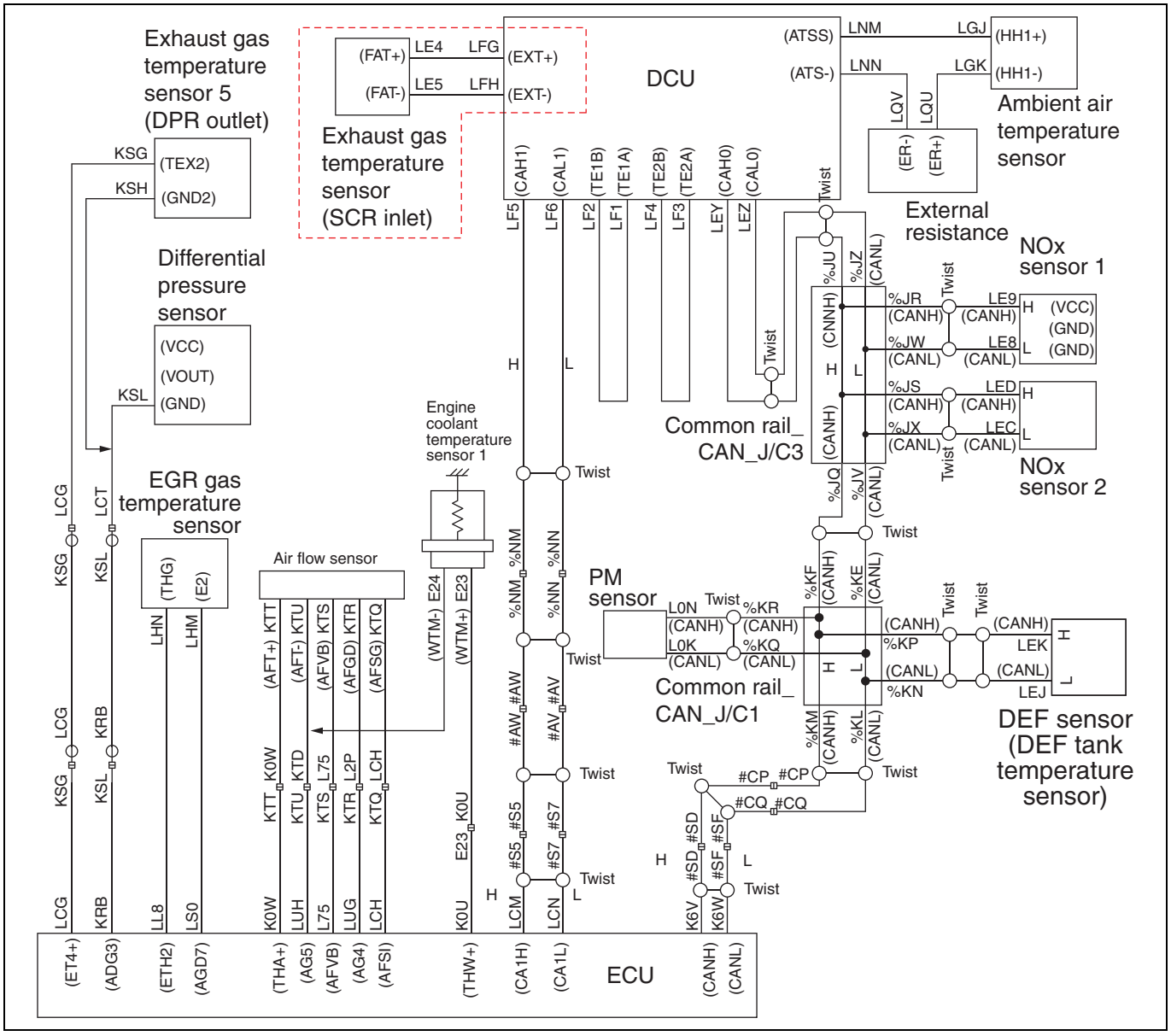


SAPH16F020400078

### 1. Technical description

- Exhaust gas temperature sensor (SCR inlet) rationality is checked by temperature model calculated from exhaust gas temperature sensor 5 (DPR outlet).

**<Description of malfunction>**

- Failure of exhaust gas temperature sensor (SCR inlet) is detected.

**2. DTC set condition**

(1) DTC detection condition

- Starter switch ON.
- Engine speed ≥ 1000 r/min, and
- Time elapsed since engine start > 10sec
- Fuel injection quantity (from Engine ECU) ≥ 10 mg/cyl/sec
- MAF (from Engine ECU) ≥ 300 kg/h

(2) Judgement criteria

1. Calculated exhaust gas temperature sensor (SCR inlet): > 210 °C {410 °F} more than 10 sec.
2. Actual exhaust gas temperature sensor (SCR inlet): < 160 °C {320 °F} for 7 sec.

or

1. Calculated exhaust gas temperature sensor (SCR inlet): < 210 °C {410 °F} more than 10 sec.
2. Actual exhaust gas temperature sensor (SCR inlet): < 260 °C {320 °F} for 7 sec.

**3. Reset condition**

- After having restored to the normal conditions.

**4. Indication, warning or system control regulation when the DTC is set.**

- MIL: ON
- DEF injection is stopped.
- NOx reduction quantity monitoring is aborted.

**5. Symptoms on the vehicle when the DTC is set**

**<Symptoms on the vehicle due to backup control (fail safe function)>**

- NOx reduction function is prevented.

**<Symptoms on the vehicle due to malfunction>**

- –

**6. Pre-inspection work**

- Check if the battery voltage is in the normal range.

**7. After-inspection work**

- Clear all past DTCs.
- Check if no DTC is stored after test drive.

**8. Estimated failure factors**

- Poor connector contact or faulty connector fit
- Failure of exhaust gas temperature sensor (SCR inlet)
- Failure of ambient air temperature sensor
- Failure of exhaust gas temperature sensor 5 (DPR outlet)
- Failure of engine coolant temperature sensor

## INSPECTION PROCEDURE: P14C1

| 1 | Inspect the exhaust gas temperature sensor (SCR inlet) connector |
|---|---|

1. Check the connection of the exhaust gas temperature sensor (SCR inlet) connector (Looseness and poor contact).

**Was any failure found?**

**YES**

**Connect securely, repair if needed.**
**Perform "After-inspection work" of INFORMATION section.**

**NO**

**Go to step 2.**

| 2 | Inspect the exhaust gas temperature sensor (SCR inlet) |
|---|---|

1. Check the installation of the exhaust gas temperature sensor (SCR inlet).
2. Make sure there is no dirt or damage to the exhaust gas temperature sensor (SCR inlet).

**Was any failure found?**

**YES**

**Clean the exhaust gas temperature sensor (SCR inlet) and install it properly. If damaged, replace the exhaust gas temperature sensor (SCR inlet).**
**Perform "After-inspection work" of INFORMATION section.**

**NO**

**Go to step 3.**

| 3 | Inspect the exhaust gas temperature sensor (SCR inlet) unit |
|---|---|

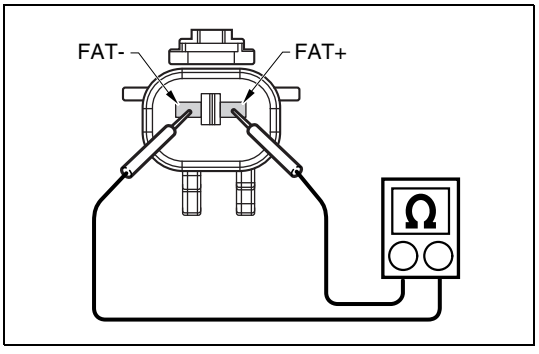


SAPH16F020400079

1. Set the starter switch to the "LOCK" position.
2. Disconnect the exhaust gas temperature sensor (SCR inlet) connector.
3. Use the electrical tester to measure the resistance between the terminals of the exhaust gas temperature sensor (SCR inlet).

| Measurement conditions | Tester connections | Standard values |
|---|---|---|
| **Starter switch: LOCK** | **Exhaust gas temperature sensor (SCR inlet) FAT+ – FAT-** | **20 °C {68 °F}: 220 Ω** |

**Do the measurements meet the standard value?**

| YES | NO |
|---|---|
| **Go to step 4.** | **Replace the exhaust gas temperature sensor (SCR inlet).**<br>**Perform "After-inspection work" of INFORMATION section.** |

**4 Inspect the ambient air temperature sensor connector**

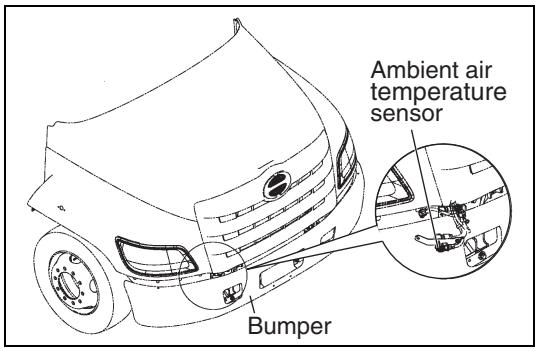

SAPH16F020400080

1. Check the connection of the ambient air temperature sensor connector (Looseness and poor contact).

**Was any failure found?**

| YES | NO |
|---|---|
| **Connect securely, repair if needed.**<br>**Perform "After-inspection work" of INFORMATION section.** | **Go to step 5.** |

**5 Inspect the ambient air temperature sensor connector**

1. Check the installation of the ambient air temperature sensor.
2. Make sure there is no dirt or damage to the ambient air temperature sensor.

**Was any failure found?**

| YES | NO |
|---|---|
| **Clean the ambient air temperature sensor connector and install it properly. If damaged, replace the ambient air temperature sensor.**<br>**Perform "After-inspection work" of INFORMATION section.** | **Go to step 6.** |

| 6 | Inspect the ambient air temperature sensor unit |
|---|---|

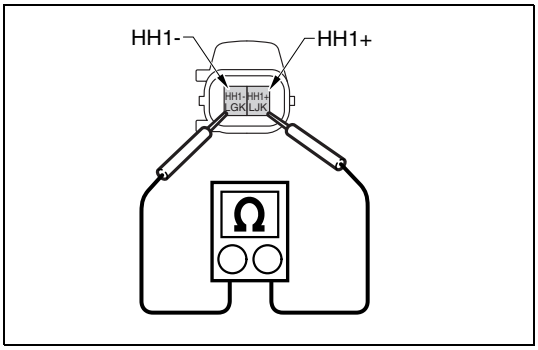


SAPH16F020400081

1. Disconnect the ambient air temperature sensor connector.
2. Use the electrical tester to measure the resistance between the terminals of the ambient air temperature sensor.

| Measurement conditions | Tester connections | Standard values |
|---|---|---|
| Starter switch: LOCK | Ambient air temperature sensor HH1+ – HH1- | 25 °C {77 °F}: 1.7 kΩ |

**Do the measurements meet the standard value?**

**YES**

**Go to step 7.**

**NO**

**Replace the ambient air temperature sensor. Perform "After-inspection work" of INFORMATION section.**

| 7 | Inspect the DCU 86P connector |
|---|---|

1. Check the connection of the DCU 86P connector (Looseness and poor contact).

**Was any failure found?**

**YES**

**Connect securely, repair if needed. Perform "After-inspection work" of INFORMATION section.**

**NO**

**Go to step 8.**

| 8 | Inspect the ambient air temperature sensor harness |
|---|---|

1. Connect the ambient air temperature sensor connector.
2. Disconnect the DCU 86P connector.
3. Connect the signal check harness and use the electrical tester to measure the resistance between the terminals of the DCU 86P vehicle-side connector.

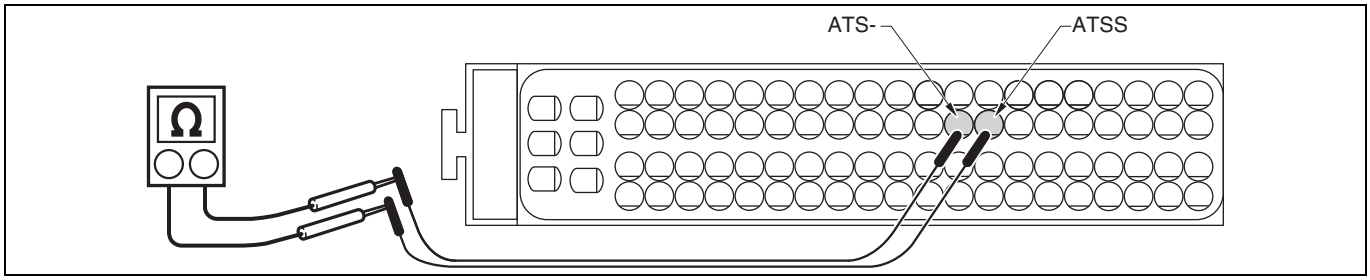


SAPH16F020400082

| Measurement conditions | Tester connections | Standard values |
|---|---|---|
| Starter switch: LOCK | DCU 86P vehicle-side connector ATSS – ATS- | 25 °C {77 °F}: 3.7 kΩ |

**Do the measurements meet the standard value?**

**YES**

**Go to step 11.**

**NO**

**Go to step 9.**

| 9 | Inspect the connector of the external resistor |
|---|---|

1. Check the connection of the external resistor connector (Looseness and poor contact).

**Was any failure found?**

**YES**

**Connect securely, repair if needed.**
**Perform "After-inspection work" of INFORMATION section.**

**NO**

**Go to step 10.**

| 10 | Inspect the external resistor unit |
|---|---|

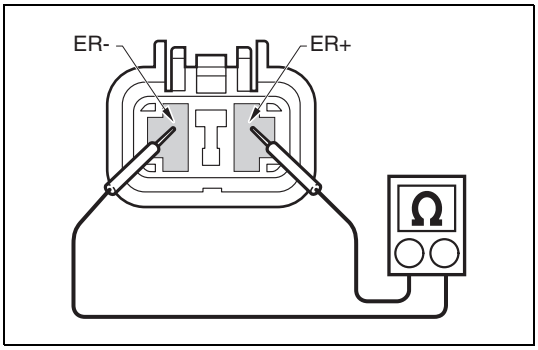


SAPH16F020400083

1. Disconnect the external resistor connector.
2. Use the electrical tester to measure the resistance between the terminals of the external resistor.

| Measurement conditions | Tester connections | Standard values |
|---|---|---|
| Starter switch: LOCK | External resistor ER+ – ER- | 2 kΩ |

**Do the measurements meet the standard value?**

**YES**

**Repair or replace the harness.**
**Perform "After-inspection work" of INFORMATION section.**

**NO**

**Replace the external resistor.**
**Perform "After-inspection work" of INFORMATION section.**

| 11 | Inspect the exhaust gas temperature sensor 5 (DPR outlet) connector |
|---|---|

1. Check the connection of the exhaust gas temperature sensor 5 (DPR outlet) connector (Looseness and poor contact).

**Was any failure found?**

**YES**

**Connect securely, repair if needed.**
**Perform "After-inspection work" of INFORMATION section.**

**NO**

**Go to step 12.**

| 12 | Inspect the exhaust gas temperature sensor 5 (DPR outlet) |
|---|---|

1. Check the installation of the exhaust gas temperature sensor 5 (DPR outlet).
2. Make sure there is no dirt or damage to the exhaust gas temperature sensor 5 (DPR outlet).

**Was any failure found?**

**YES**

**Clean the exhaust gas temperature sensor 5 (DPR outlet) and install it properly. If damaged, replace the exhaust gas temperature sensor 5 (DPR outlet).**
**Perform "After-inspection work" of INFORMATION section.**

**NO**

**Go to step 13.**

## 13 Inspect the exhaust gas temperature sensor 5 (DPR outlet) unit

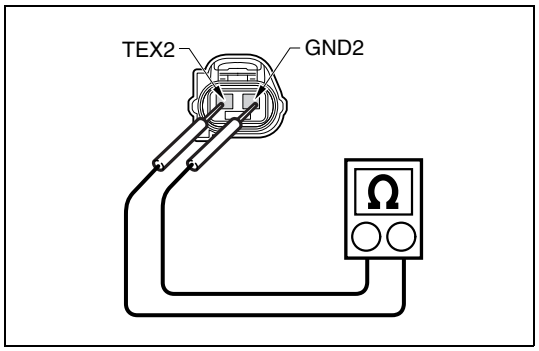

SAPH16F020400084

1. Disconnect the exhaust gas temperature sensor 5 (DPR outlet) connector.
2. Use the electrical tester to measure the resistance between the terminals of the exhaust gas temperature sensor 5 (DPR outlet).

| Measurement conditions | Tester connections | Standard values |
|---|---|---|
| **Starter switch: LOCK** | **Exhaust gas temperature sensor 5 (DPR outlet) TEX2 – GND2** | **20 °C {68 °F}: 13.7 – 29.8 kΩ 50 °C {122°F}: 7.13 – 13.7 kΩ 80 °C {176 °F}: 4.1 – 7.13 kΩ** |

**Do the measurements meet the standard value?**

**YES**

**Go to step 14.**

**NO**

**Replace the exhaust gas temperature sensor 5 (DPR outlet).**
**Perform "After-inspection work" of INFORMATION section.**

## 14 Inspect the engine coolant temperature sensor connector

1. Check the connection of the engine coolant temperature sensor connector (Looseness and poor contact).

**Was any failure found?**

**YES**

**Connect securely, repair if needed.**
**Perform "After-inspection work" of INFORMATION section.**

**NO**

**Go to step 15.**

| 15 | Inspect the engine coolant temperature sensor |
|---|---|

1. Check the installation of the engine coolant temperature sensor.
2. Make sure there is no dirt or damage to the engine coolant temperature sensor.

**Was any failure found?**

**YES**

**Clean the engine coolant temperature sensor and install it properly. If damaged, replace the engine coolant temperature sensor.**
**Perform "After-inspection work" of INFORMATION section.**

**NO**

**Go to step 16.**

| 16 | Inspect the engine coolant temperature sensor unit |
|---|---|

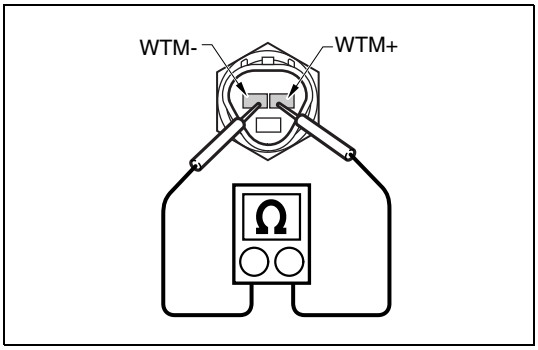

SAPH16F020400085

1. Disconnect the engine coolant temperature sensor connector.
2. Use the electrical tester to measure the resistance between the terminals of the engine coolant temperature sensor.

| Measurement conditions | Tester connections | Standard values |
|---|---|---|
| Starter switch: LOCK | Engine coolant temperature sensor WTM+ – WTM- | 20 °C {68 °F}: 2.32 – 2.59 kΩ<br>80 °C {176 °F}: 0.310 – 0.326 kΩ |

**Do the measurements meet the standard value?**

**YES**

**Go to step 17.**

**NO**

**Replace the engine coolant temperature sensor.**
**Perform "After-inspection work" of INFORMATION section.**

| 17 | Inspect the air flow sensor |
|---|---|

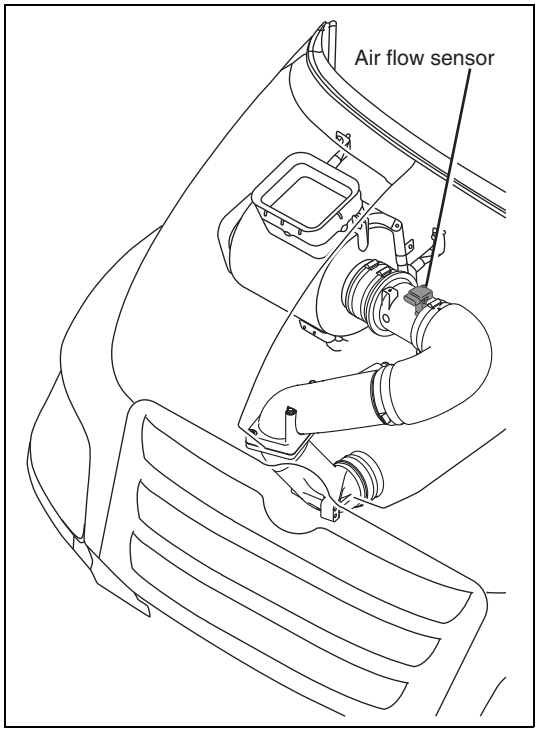


SAPH16F020400086

1. Check the installation of the air flow sensor.
2. Make sure there is no dirt or damage to the air flow sensor.

**Was any failure found?**

**YES**

**If dirt, clogging or damage in the sensing unit was found, replace the air flow sensor. Perform "After-inspection work" of INFORMATION section.**

**NO**

**Go to step 18.**

| 18 | Check the DTC detected (DCU) [HINO DX II ] |
|---|---|

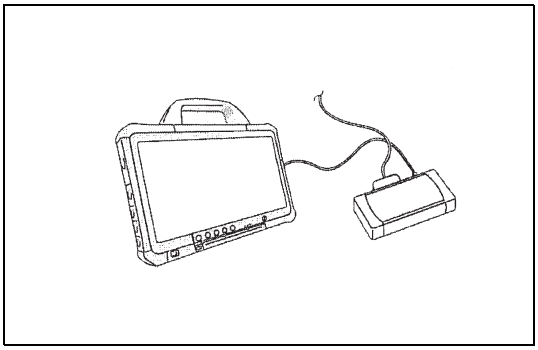

SAPH16F020400087

1. Perform an engine warm-up. (Coolant temperature: 60 °C {140 °F} or more)
2. Stop the engine.
3. Connect the vehicle to HINO DX II .
4. Set the starter switch to the "ON" position.
5. Select [DCU] and check if P14C1 has been detected.

**Has DTC P14C1 been detected?**

**YES**

**Replace the DCU.**
**Perform "After-inspection work" of INFORMATION section.**

**NO**

**Procedure completed.**
**Perform "After-inspection work" of INFORMATION section.**

# DTC: P14C2

EN01H16F02040F03001026

## DTC: P14C2 Exhaust gas temperature sensor (SCR inlet) - out of range (Out of range low)

INFORMATION

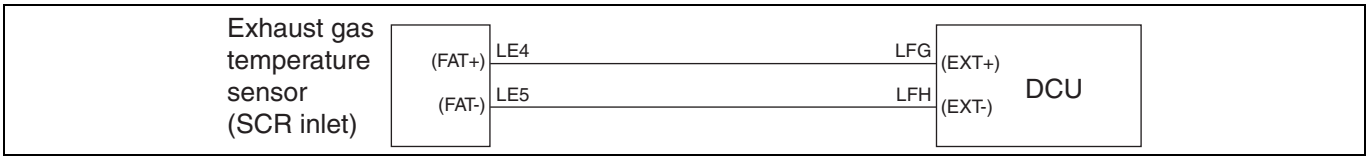


SAPH16F020400088

**1. Technical description**

- Exhaust gas temperature sensor (SCR inlet) monitors the temperature at the SCR upstream.
- Exhaust gas temperature sensor (SCR inlet) detects disconnection and short-circuit based on the circuit voltage and signals in DCU.

**<Description of malfunction>**

- Failure of exhaust gas temperature sensor (SCR inlet) is detected.

**2. DTC set condition**

(1) DTC detection condition
Starter switch ON.
(2) Judgement criteria
Exhaust gas temperature sensor voltage: Less than 0.7 V

**3. Reset condition**

- After having restored to the normal conditions.

**4. Indication, warning or system control regulation when the DTC is set.**

- MIL: ON
- DEF injection is stopped.
- NOx reduction quantity monitoring is aborted.

**5. Symptoms on the vehicle when the DTC is set**

**<Symptoms on the vehicle due to backup control (fail safe function)>**

- Exhaust gas purification function is declined.

**<Symptoms on the vehicle due to malfunction>**

- –

**6. Pre-inspection work**

- Check if the battery voltage is in the normal range.

**7. After-inspection work**

- Clear all past DTCs.
- Check if no DTC is stored after test drive.

**8. Estimated failure factors**

- Disconnection or short-circuit in sensor harness
- Exhaust gas temperature sensor (SCR inlet)
  - Sensor disconnection
  - Abnormal resistance of sensor

## INSPECTION PROCEDURE: P14C2

| 1 | Inspect the exhaust gas temperature sensor (SCR inlet) connector |
|---|---|

1. Check the connection of the exhaust gas temperature sensor (SCR inlet) connector (Looseness and poor contact).

**Was any failure found?**

**YES**

**Connect securely, repair if needed.**
**Perform "After-inspection work" of INFORMATION section.**

**NO**

**Go to step 2.**

| 2 | Inspect the exhaust gas temperature sensor (SCR inlet) |
|---|---|

1. Check the installation of the exhaust gas temperature sensor (SCR inlet).
2. Make sure there is no dirt or damage to the exhaust gas temperature sensor (SCR inlet).

**Was any failure found?**

**YES**

**Clean the exhaust gas temperature sensor (SCR inlet) and install it properly. If damaged, replace the exhaust gas temperature sensor (SCR inlet).**
**Perform "After-inspection work" of INFORMATION section.**

**NO**

**Go to step 3.**

| 3 | Inspect the exhaust gas temperature sensor (SCR inlet) unit |
|---|---|

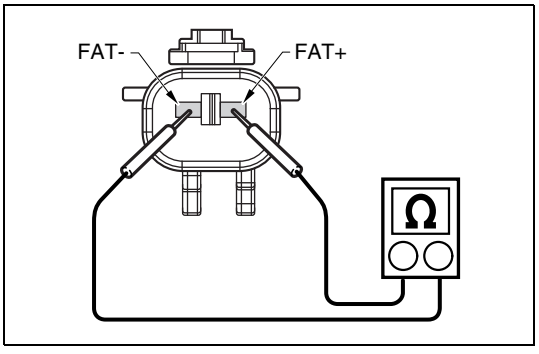


SAPH16F020400089

1. Set the starter switch to the "LOCK" position.
2. Disconnect the exhaust gas temperature sensor (SCR inlet) connector.
3. Use the electrical tester to measure the resistance between the terminals of the exhaust gas temperature sensor (SCR inlet).

| Measurement conditions | Tester connections | Standard values |
|---|---|---|
| **Starter switch: LOCK** | **Exhaust gas temperature sensor FAT+ – FAT-** | **20 °C {68 °F}: 220 Ω** |

**Do the measurements meet the standard value?**

**YES**

**Go to step 4.**

**NO**

**Replace the exhaust gas temperature sensor (SCR inlet).**
**Perform "After-inspection work" of INFORMATION section.**

## 4 Inspect for short-circuit in the exhaust gas temperature sensor (SCR inlet) harness

1. Set the starter switch to the "LOCK" position.
2. Disconnect the DCU 86P connector.
3. Use the electrical tester to measure the resistance between the terminals of the DCU 86P vehicle-side connector and the ground.

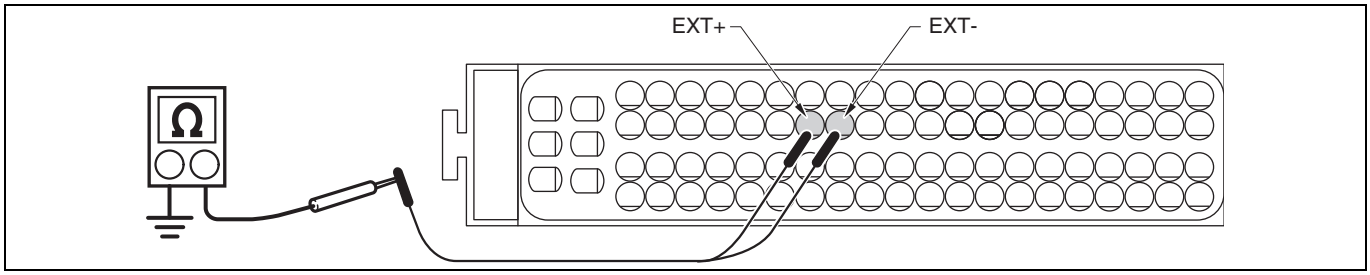


SAPH16F020400090

| Measurement conditions | Tester connections | Standard values |
|---|---|---|
| Starter switch: LOCK | DCU 86P vehicle-side connector<br>EXT+ – Ground<br>EXT- – Ground | ∞ Ω |

**Do the measurements meet the standard value?**

**YES**

**Go to step 5.**

**NO**

**Repair or replace the harness.**
**Perform "After-inspection work" of INFORMATION section.**

| 5 | Inspect disconnection of the exhaust gas temperature sensor (SCR inlet) harness |
|---|---|

1. Connect the exhaust gas temperature sensor (SCR inlet) connector.
2. Connect the signal check harness and use the electrical tester to measure the resistance between the terminals of the DCU 86P vehicle-side connector.

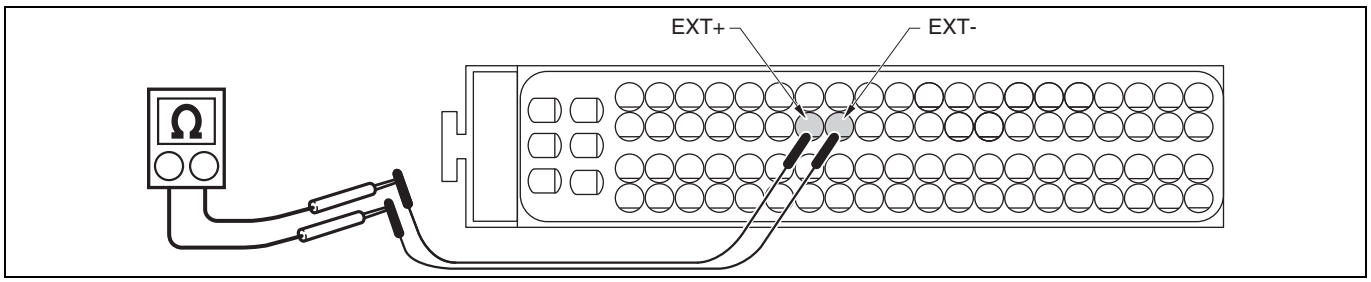


SAPH16F020400091

| Measurement conditions | Tester connections | Standard values |
|---|---|---|
| Starter switch: LOCK | DCU 86P vehicle-side connector EXT+ – EXT- | 20 °C {68 °F}: 220 Ω |

**Do the measurements meet the standard value?**

**YES**

**Go to step 6.**

**NO**

**Repair or replace the harness.**
**Perform "After-inspection work" of INFORMATION section.**

| 6 | Check the DTC detected (DCU) [HINO DX II ] |
|---|---|

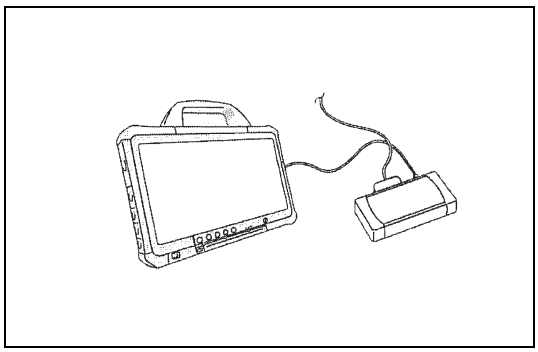

SAPH16F020400092

1. Perform an engine warm-up. (Coolant temperature: 60 °C {140 °F} or more)
2. Stop the engine and set the starter switch to the "LOCK" position.
3. Connect the vehicle to HINO DX II .
4. Set the starter switch to the "ON" position.
5. Select [DCU] and check if P14C2 has been detected.

**Has DTC P14C2 been detected?**

**YES**

**Replace the DCU.**

**NO**

**Procedure completed.**
**Perform "After-inspection work" of INFORMATION section.**

# DTC: P14C3

EN01H16F02040F03001027

## DTC:P14C3 Exhaust gas temperature sensor (SCR inlet) - out of range (Out of range high)

INFORMATION

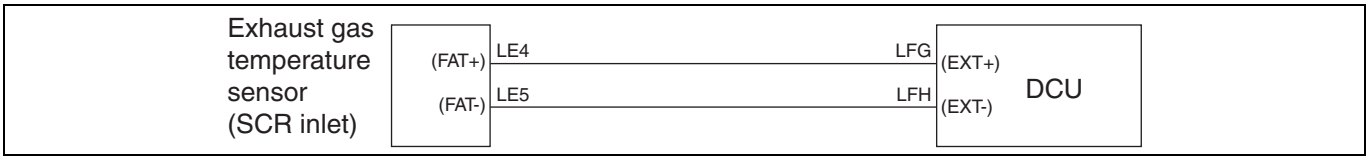


SAPH16F020400093

**1. Technical description**

- Exhaust gas temperature sensor (SCR inlet) monitors the temperature at the SCR upstream.
- DCU detects disconnection and short-circuit based on the circuit voltage of the exhaust gas temperature sensor (SCR inlet).

**<Description of malfunction>**

- Failure of exhaust gas temperature sensor (SCR inlet) is detected.

**2. DTC set condition**

(1) DTC detection condition
Starter switch ON.
(2) Judgement criteria
Exhaust gas temperature sensor voltage: More than 2.2 V

**3. Reset condition**

- After having restored to the normal conditions.

**4. Indication, warning or system control regulation when the DTC is set.**

- MIL: ON
- SCR malfunction light: ON
- DEF injection is stopped.
- NOx reduction quantity monitoring is aborted.
- If malfunction does not improve within 500 miles: engine output is restricted.
- If malfunction does not improve within 2,000 miles: vehicle speed is restricted.

**5. Symptoms on the vehicle when the DTC is set**

**<Symptoms on the vehicle due to backup control (fail safe function)>**

- Exhaust gas purification function is declined.
- Engine output is insufficient (when malfunction does not improve within 500 miles)
- Vehicle does not speed up (when malfunction does not improve within 2,000 miles)

**<Symptoms on the vehicle due to malfunction>**

- –

**6. Pre-inspection work**

- Check if the battery voltage is in the normal range.

**7. After-inspection work**

- Clear all past DTCs.
- Reset "Urea SCR related memory" by HINO DX II "Data monitor and Activation test".
- Check if no DTC is stored after test drive.

**8. Estimated failure factors**

- Disconnection or short-circuit in sensor harness
- Exhaust gas temperature sensor (SCR inlet)
  - Sensor disconnection
  - Abnormal resistance of sensor

## INSPECTION PROCEDURE: P14C3

| 1 | Inspect the exhaust gas temperature sensor (SCR inlet) connector |
|---|---|

1. Check the connection of the exhaust gas temperature sensor (SCR inlet) connector (Looseness and poor contact).

**Was any failure found?**

**YES**

**Connect securely, repair if needed.**
**Perform "After-inspection work" of INFORMATION section.**

**NO**

**Go to step 2.**

| 2 | Inspect the exhaust gas temperature sensor (SCR inlet) |
|---|---|

1. Check the installation of the exhaust gas temperature sensor (SCR inlet).
2. Make sure there is no dirt or damage to the exhaust gas temperature sensor (SCR inlet).

**Was any failure found?**

**YES**

**Clean the exhaust gas temperature sensor (SCR inlet) and install it properly. If damaged, replace the exhaust gas temperature sensor (SCR inlet).**
**Perform "After-inspection work" of INFORMATION section.**

**NO**

**Go to step 3.**

| 3 | Inspect the exhaust gas temperature sensor (SCR inlet) unit |
|---|---|

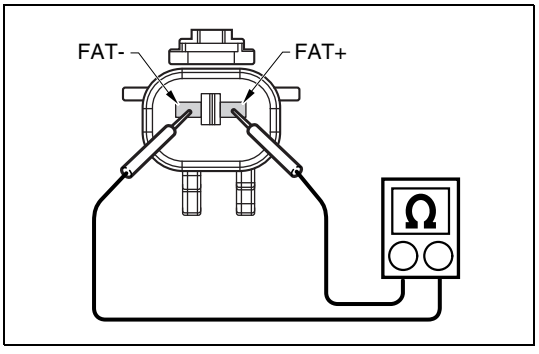


SAPH16F020400094

1. Set the starter switch to the "LOCK" position.
2. Disconnect the exhaust gas temperature sensor (SCR inlet) connector.
3. Use the electrical tester to measure the resistance between the terminals of the exhaust gas temperature sensor (SCR inlet).

| Measurement conditions | Tester connections | Standard values |
|---|---|---|
| **Starter switch: LOCK** | **Exhaust gas temperature sensor (SCR inlet) FAT+ – FAT-** | **20 °C {68 °F}: 220 Ω** |

**Do the measurements meet the standard value?**

| YES | NO |
|---|---|
| **Go to step 4.** | **Replace the exhaust gas temperature sensor (SCR inlet).**<br>**Perform "After-inspection work" of INFORMATION section.** |

| 4 | **Inspect for short-circuit in the exhaust gas temperature sensor (SCR inlet) harness** |
|---|---|

1. Disconnect the DCU 86P connector.
2. Connect the signal check harness and use the electrical tester to measure the resistance between the terminals of the DCU 86P vehicle-side connector and the ground.

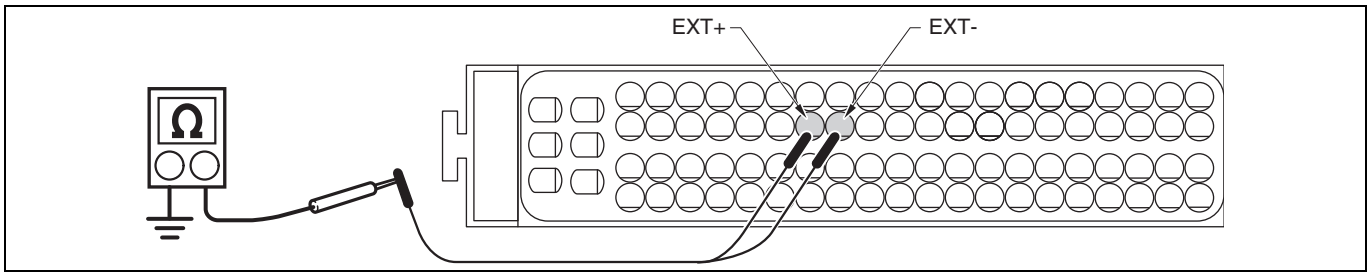


SAPH16F020400095

| Measurement conditions | Tester connections | Standard values |
|---|---|---|
| **Starter switch: LOCK** | **DCU 86P vehicle-side connector**<br>**EXT+ – Ground**<br>**EXT- – Ground** | ∞ Ω |

**Do the measurements meet the standard value?**

| YES | NO |
|---|---|
| **Go to step 5.** | **Repair or replace the harness.**<br>**Perform "After-inspection work" of INFORMATION section.** |

| 5 | Inspect disconnection of the exhaust gas temperature sensor (SCR inlet) harness |
|---|---|

1. Connect the exhaust gas temperature sensor (SCR inlet) connector.

2. Connect the signal check harness and use the electrical tester to measure the resistance between the terminals of the DCU 86P vehicle-side connector.

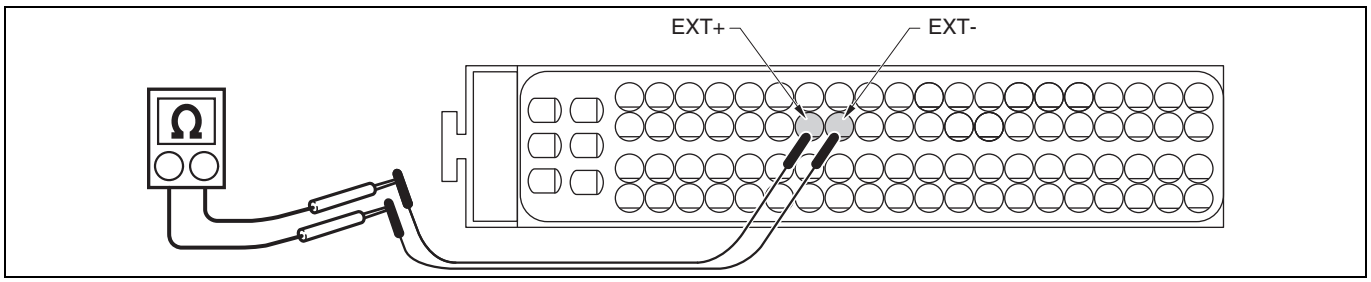


SAPH16F020400096

| Measurement conditions | Tester connections | Standard values |
|---|---|---|
| Starter switch: LOCK | DCU 86P vehicle-side connector EXT+ – EXT- | 20 °C {68 °F}: 220 Ω |

**Do the measurements meet the standard value?**

**YES**

**Go to step 6.**

**NO**

**Repair or replace the harness.**
**Perform "After-inspection work" of INFORMATION section.**

| 6 | Check the DTC detected (DCU) [HINO DX II ] |
|---|---|

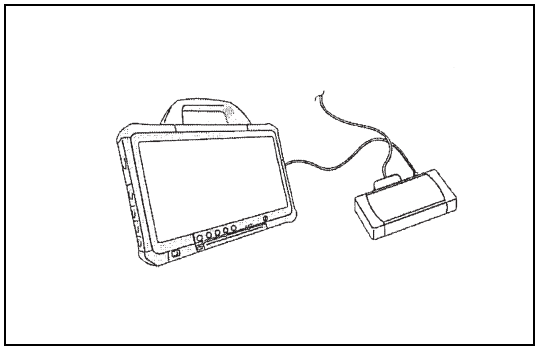

SAPH16F020400097

1. Perform an engine warm-up. (Coolant temperature: 60 °C {140 °F} or more)
2. Stop the engine and set the starter switch to the "LOCK" position.
3. Connect the vehicle to HINO DX II .
4. Set the starter switch to the "ON" position.
5. Select [DCU] and check if P14C3 has been detected.

**Has DTC P14C3 been detected?**

**YES**

**Replace the DCU.**
**Perform "After-inspection work" of INFORMATION section.**

**NO**

**Procedure completed.**
**Perform "After-inspection work" of INFORMATION section.**

# DTC: P202E

EN01H16F02040F03001028

## DTC: P202E Reductant Delivery Performance

INFORMATION

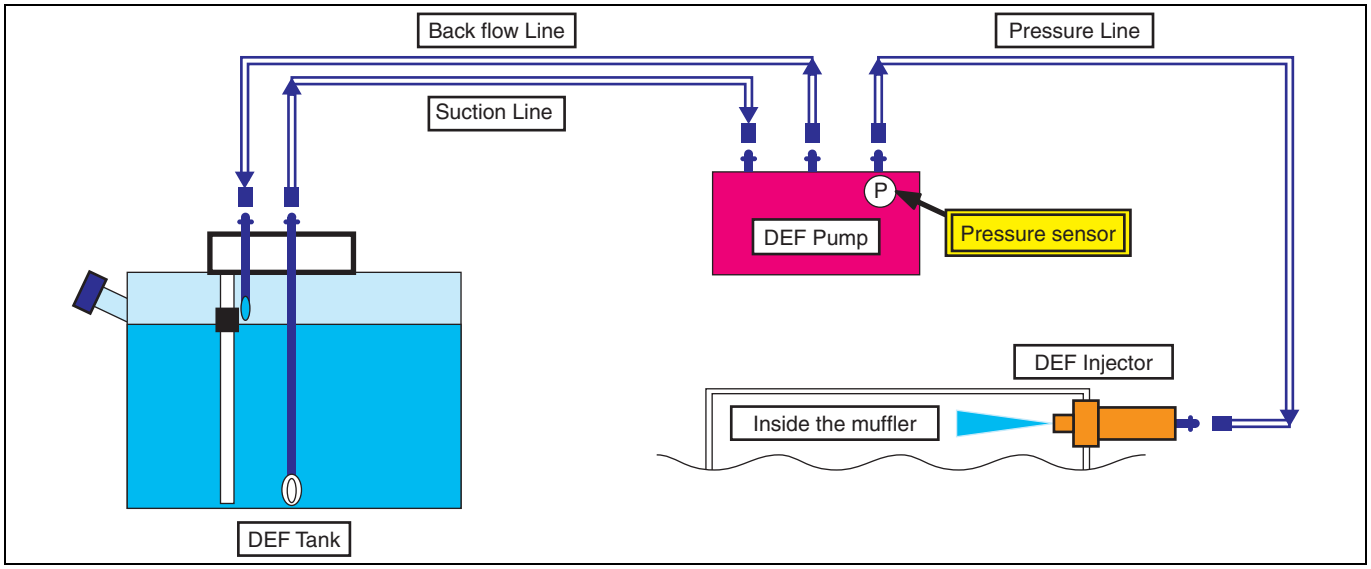


SAPH16F020400098

**1. Technical description**

- The amount of added DEF is diagnosed as abnormal.
- The amount of added DEF is controlled by the DEF pressure and the opening of the DEF injector.

**<Description of malfunction>**

- Failure of DEF injector at system startup is detected.

**2. DTC set condition**

(1) DTC detection condition
<At system start up>
The engine is ON.
Exhaust gas temperature sensor (SCR inlet) > 150 °C {302 °F}
DEF pump pressure is stable for 8 sec. when it is between 850 kPa {123 psi} and 950 kPa {138 psi}.

(2) Judgement criteria
<At system start up>
Pressure line check start: DEF pump speed: keep and DEF injector: full open
If DEF pressure is > 750 kPa {108 psi} after 4 sec. from DEF injector open, failure counter is count up.
When Failure counts ≥ 22, DTC is detected.

**3. Reset condition**

- After having restored to the normal conditions.

**4. Indication, warning or system control regulation when the DTC is set.**

- MIL: ON
- SCR malfunction light: ON
- DEF injection is stopped.
- NOx reduction quantity monitoring is aborted.
- Output restricted instantaneously.
- If malfunction does not improve within 50 min.: vehicle speed is restricted.

**5. Symptoms on the vehicle when the DTC is set**

**<Symptoms on the vehicle due to backup control (fail safe function)>**

- Exhaust gas purification function is declined.
- Engine output is insufficient.
- Vehicle does not speed up (when malfunction does not improve within 50 min.).

**<Symptoms on the vehicle due to malfunction>**

- –

**6. Pre-inspection work**

- Check if the battery voltage is in the normal range.

**7. After-inspection work**

- Clear all past DTCs.
- Reset "Urea SCR related memory".
- Check if no DTC is stored after test drive.

**8. Estimated failure factors**

- Clogging of the DEF injector
- Clogging of the DEF pipe
- DEF pump main filter element is clogged.

**NOTICE**
**DEF -SCR system can be damaged by Diesel filling up to the tank.**
**If DEF pump main filter has a yellow slime, it is an evidence of biodiesel filled to the tank.**

## INSPECTION PROCEDURE: P202E

| 1 | Inspect the DEF pipe (pressure line) between the DEF pump and the DEF injector. |
|---|---|

1. Check the DEF pipe (pressure line) and check if there are no disconnections, clogging, corrosion, or cracks.

**Was any failure found?**

**YES**

**Replace the DEF pipe.**
**Perform "After-inspection work" of INFORMATION section.**

**NO**

**Go to step 2.**

| 2 | Inspect DEF injector (1) [HINO DX II ] |
|---|---|

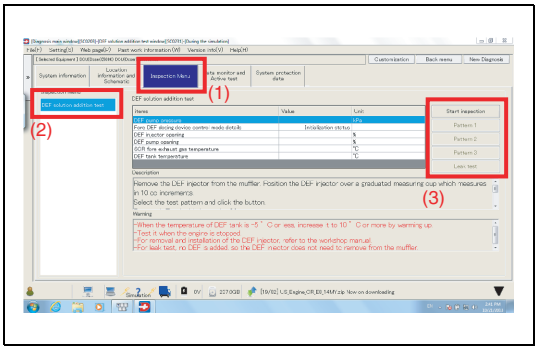


SAPH16F020400099

**NOTICE**
**Prepare a beaker or similar, plus a larger measuring vessel for measuring the DEF to be injected, before perform this inspection. (If the vessel is small, there is dispersion at the time of injection from the injector, and the measuring quantity decreases.)**

1. Set the starter switch to the "LOCK" position.

2. Remove the DEF injector from the muffler.

**HINT**
**Refer to the workshop manual "SELECTIVE CATALYTIC REDUCTION (SCR)" in the chapter "EMISSION CONTROL (J08E)" (S5-CJ08E14* or S5-UJ08E14*) for removal and installation of the DEF injector.**
**After removal of the DEF pipe from the injector, pour the DEF solution into the injector entrance. After pouring fully, leave for 1 minute, and then install the pipes.**

3. Connect the vehicle to HINO DX II .

4. Set the starter switch to the "ON" position.

5. Select [DCU].

6. Select [Inspection Menu] on HINO DX II menu and check the operation of the DEF injector.
   <Inspection procedure>
   (1) Select [Inspection Menu].
   (2) Select [DEF solution addition test].
   (3) Perform addition test as instructed on the HINO DX II screen. (Perform all three patterns)

**NOTICE**
**When the DEF tank temperature is -5 °C (23 °F) or lower, perform warm-up to raise it to 10 °C (50 °F) or higher.**

**Is operation normal?**

**YES**

**Procedure completed. DEF crystal clogging is considered resolved.**
**Perform "After-inspection work" of INFORMATION section.**

**NO**

**Go to step 3.**

| 3 | **Inspect the DEF injector (2) [HINO DX ll ]** |
|---|---|

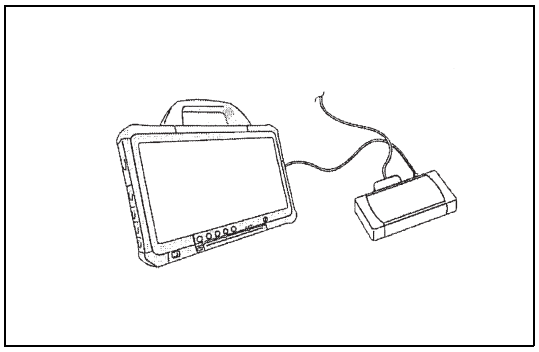

SAPH16F020400100

1. Set the starter switch to the "LOCK" position.
2. Replace DEF injector with a new one. (Do not install it on the muffler.)
3. Perform step 2 again.

**Is operation normal?**

**YES**

**New injector installed in the muffler, procedure completed. After installing the injector, idle the engine (for about 10 min.) and on the menu [Data monitor Setting] check if the DEF pressure is stable between 800 kPa {116 psi} and 1,051 kPa {152 psi}.**
**Perform "After-inspection work" of INFORMATION section.**

**NO**

**Replace the DEF pipe (pressure line). After replacing the pipe, idle the engine (for about 10 min.) and on the menu [Data monitor Setting] check if the DEF pressure is stable between 800 kPa {116 psi} and 1,051 kPa {152 psi}.**
**Perform "After-inspection work" of INFORMATION section.**

# DTC: P203C

EN01H16F02040F03001029

## DTC: P203C DEF tank level sensor - out of range (Out of range low)

INFORMATION

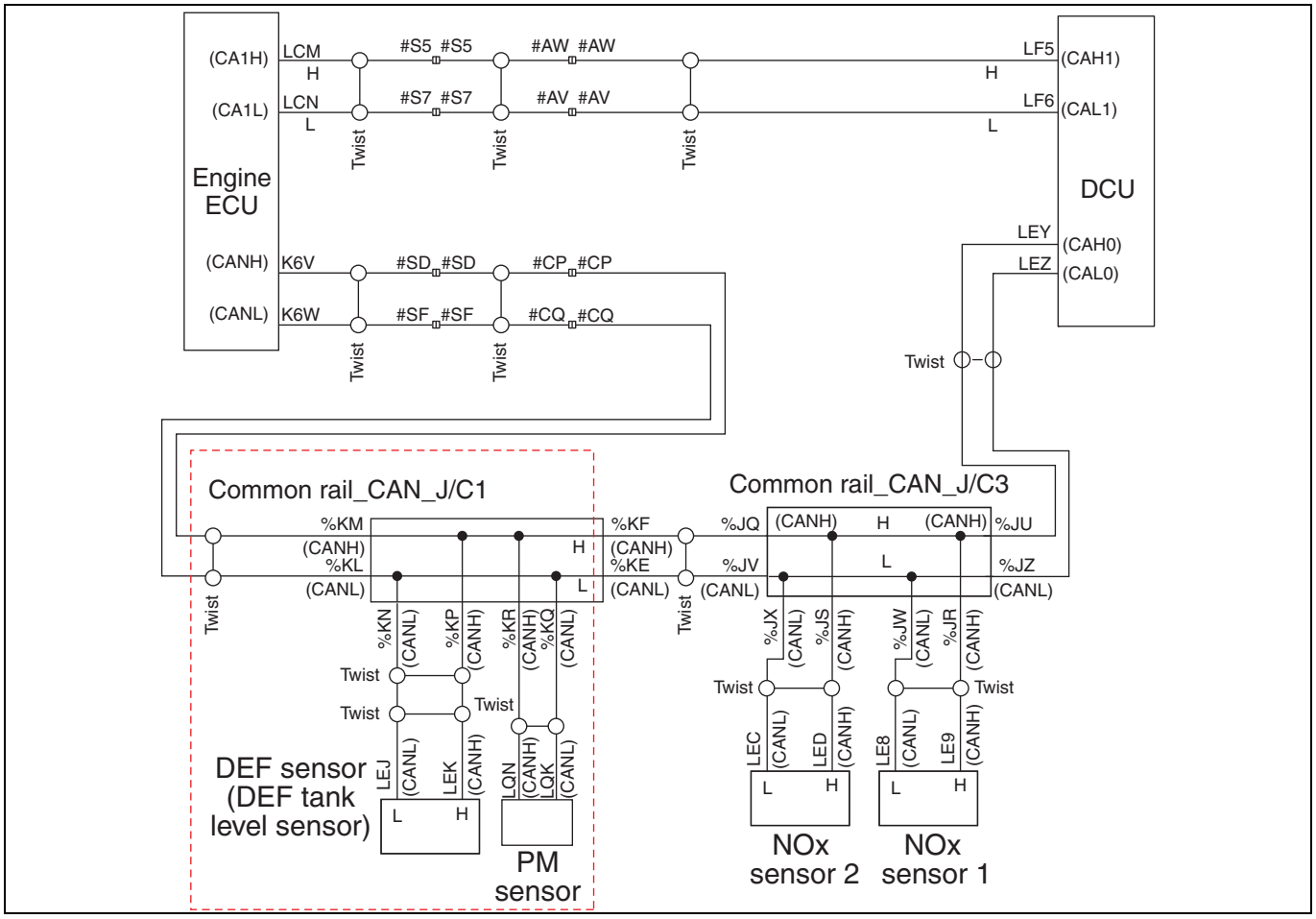


SAPH16F020400101

**1. Technical description**

- The DEF tank level sensor is connected via the engine ECU, DCU, and CAN communication, and it sends and receives data.

**<Description of malfunction>**

- Failure of DEF tank level sensor is received from CAN data.

**2. DTC set condition**

(1) DTC detection condition
Starter switch ON.

(2) Judgement criteria
Failure of DEF tank level sensor (flag) is received from CAN data.

**3. Reset condition**

- After having restored to the normal conditions.

**4. Indication, warning or system control regulation when the DTC is set.**

- MIL: ON
- DEF level indicator is stopped.

**5. Symptoms on the vehicle when the DTC is set**

**<Symptoms on the vehicle due to backup control (fail safe function)>**

- –

**<Symptoms on the vehicle due to malfunction>**

- DEF level indicator is OFF.

**6. Pre-inspection work**

- Check if the battery voltage is in the normal range.

**7. After-inspection work**

- Clear all past DTCs.
- Check if no DTC is stored after test drive.

**8. Estimated failure factors**

- DEF tank level sensor failure.

## INSPECTION PROCEDURE: P203C

| 1 | Check the DTC detected (Engine) [HINO DX II ] |
|---|---|

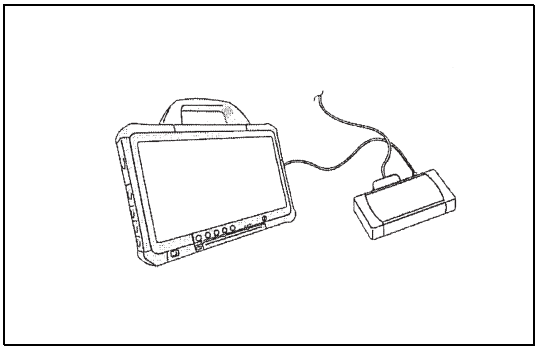

SAPH16F020400102

1. Connect the vehicle to HINO DX II .
2. Set the starter switch to the "ON" position.
3. Select [Engine] and check if a CAN communication system malfunction (U02A2) has been detected.

**Has DTC U02A2 been detected?**

**YES**

**Go to the diagnostic procedure of a related DTC.**

**NO**

**Replace the DEF tank level sensor.**
**Perform "After-inspection work" of INFORMATION section.**

# DTC: P203D

EN01H16F02040F03001030

## DTC: P203D DEF tank level sensor - out of range (Out of range high)

INFORMATION

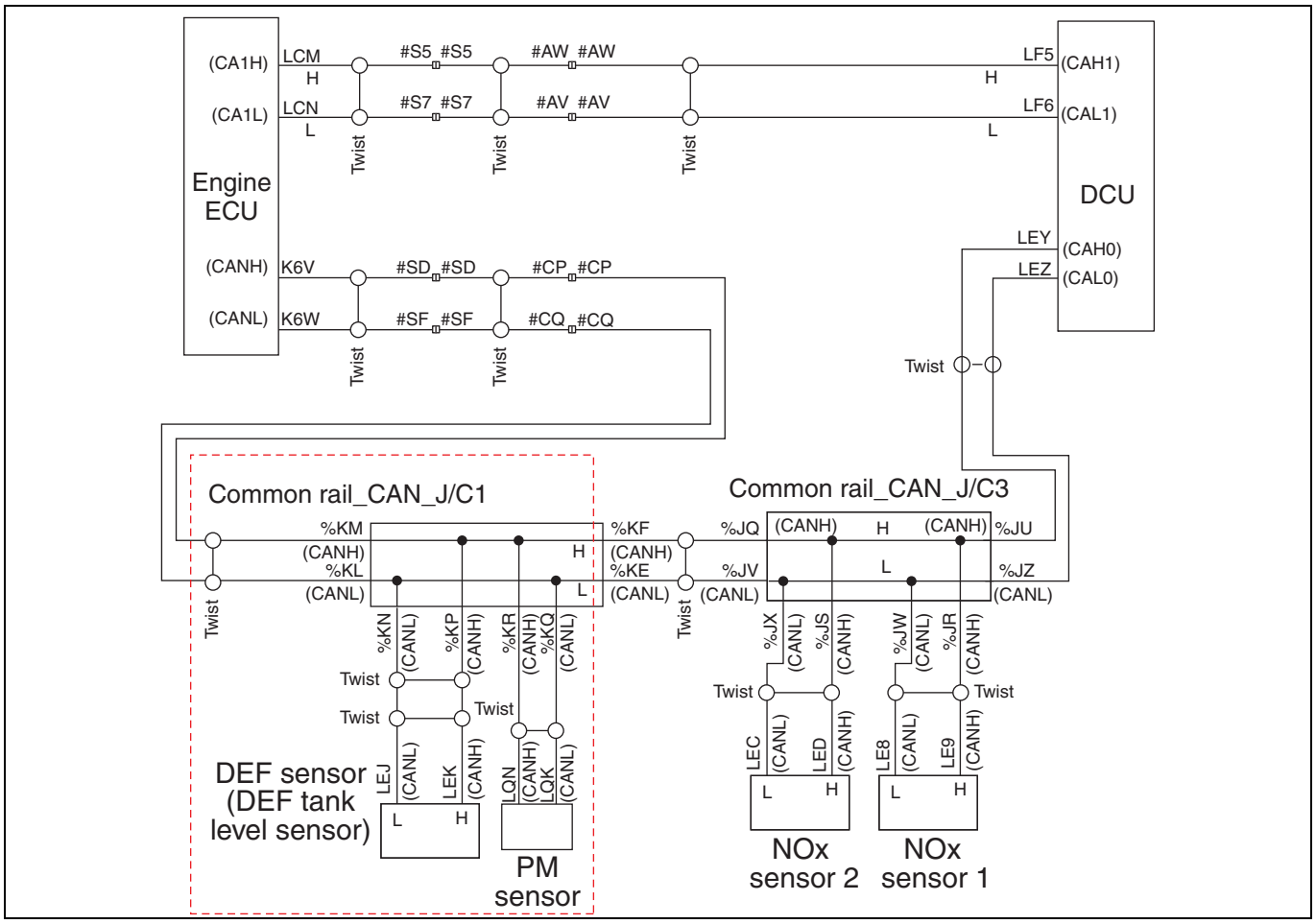


SAPH16F020400103

**1. Technical description**

- The DEF tank level sensor is connected via the engine ECU and DCU through CAN communication, and it sends and receives data.

**<Description of malfunction>**

- Failure of DEF tank level sensor is received from CAN data.

**2. DTC set condition**

(1) DTC detection condition
Starter switch ON.

(2) Judgement criteria
Failure of DEF tank level sensor (High failure flag) is received from CAN data.

**3. Reset condition**

- After having restored to the normal conditions.

**4. Indication, warning or system control regulation when the DTC is set.**

- MIL: ON
- DEF level indicator is stopped.

**5. Symptoms on the vehicle when the DTC is set**

**<Symptoms on the vehicle due to backup control (fail safe function)>**

- –

**<Symptoms on the vehicle due to malfunction>**

- DEF level indicator is OFF.

**6. Pre-inspection work**

- Check if the battery voltage is in the normal range.

**7. After-inspection work**

- Clear all past DTCs.
- Reset "Urea SCR related memory".
- Check if no DTC is stored after test drive.

**8. Estimated failure factors**

- DEF tank level sensor failure.

## INSPECTION PROCEDURE: P203D

| 1 | Check the DTC detected (Engine) [HINO DX II ] |
|---|---|

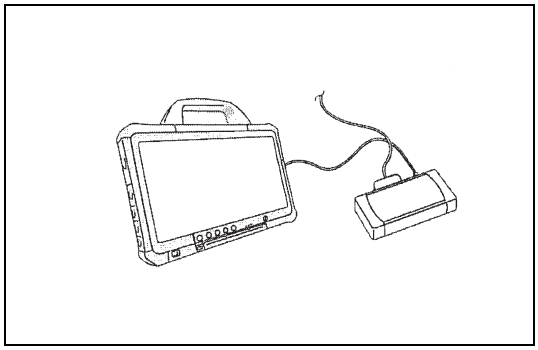

SAPH16F020400104

1. Connect the vehicle to HINO DX II .
2. Set the starter switch to the "ON" position.
3. Select [Engine] and check if a CAN communication system malfunction (U02A2) has been detected.

**Has DTC U02A2 been detected?**

**YES**

**Go to diagnosis procedure of a related DTC.**

**NO**

**Replace the DEF tank level sensor.**
**Perform "After-inspection work" of INFORMATION section.**

# DTC: P2044

EN01H16F02040F03001031

## DTC: P2044 DEF tank temp. sensor failure (Low)

INFORMATION

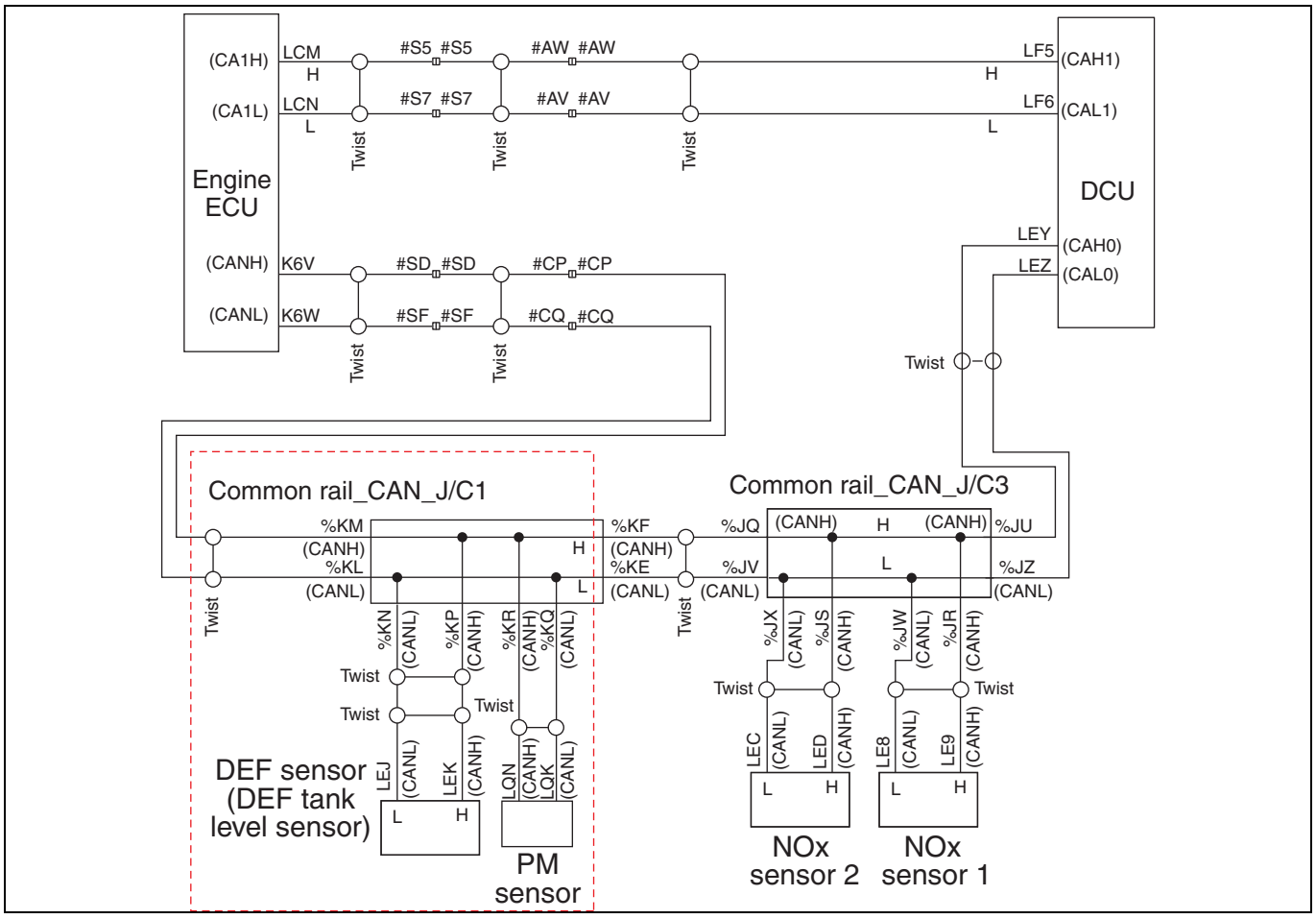


SAPH16F020400105

**1. Technical description**

- The DEF tank temperature sensor is connected via the engine ECU and DCU through CAN communication, and it sends and receives data.

**<Description of malfunction>**

- Failure of DEF tank temperature sensor 2 is received from CAN data.

**2. DTC set condition**

(1) DTC detection condition
Starter switch ON.

(2) Judgement criteria
Failure of DEF tank temperature sensor 2 (Low failure flag) is received from CAN data.

**3. Reset condition**

- After having restored to the normal conditions.

**4. Indication, warning or system control regulation when the DTC is set.**

- DEF level indicator is stopped.

**5. Symptoms on the vehicle when the DTC is set**

**<Symptoms on the vehicle due to backup control (fail safe function)>**

- DEF level indicator is OFF.

**<Symptoms on the vehicle due to malfunction>**

- –

**6. Pre-inspection work**

- Check if the battery voltage is in the normal range.

**7. After-inspection work**

- Clear all past DTCs.
- Check if no DTC is stored after test drive.

**8. Estimated failure factors**

- DEF tank temperature sensor 2 failure.

## INSPECTION PROCEDURE: P2044

| 1 | Check the DTC detected (Engine) [HINO DX II ] |
|---|---|

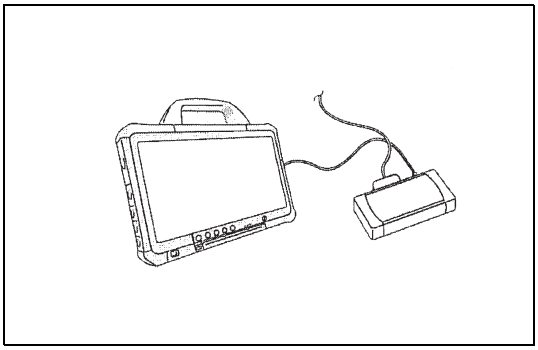

SAPH16F020400106

1. Connect the vehicle to HINO DX II .
2. Set the starter switch to the "ON" position.
3. Select [Engine] and check if a CAN communication system malfunction (U02A2) has been detected.

**Has DTC U02A2 detected?**

**YES**

**Go to diagnosis procedure of a related DTC.**

**NO**

**Replace the DEF tank temperature sensor. Perform "After-inspection work" of INFORMATION section.**

# DTC: P2045

EN01H16F02040F03001032

## DTC: P2045 DEF tank temp. sensor failure (High)

INFORMATION

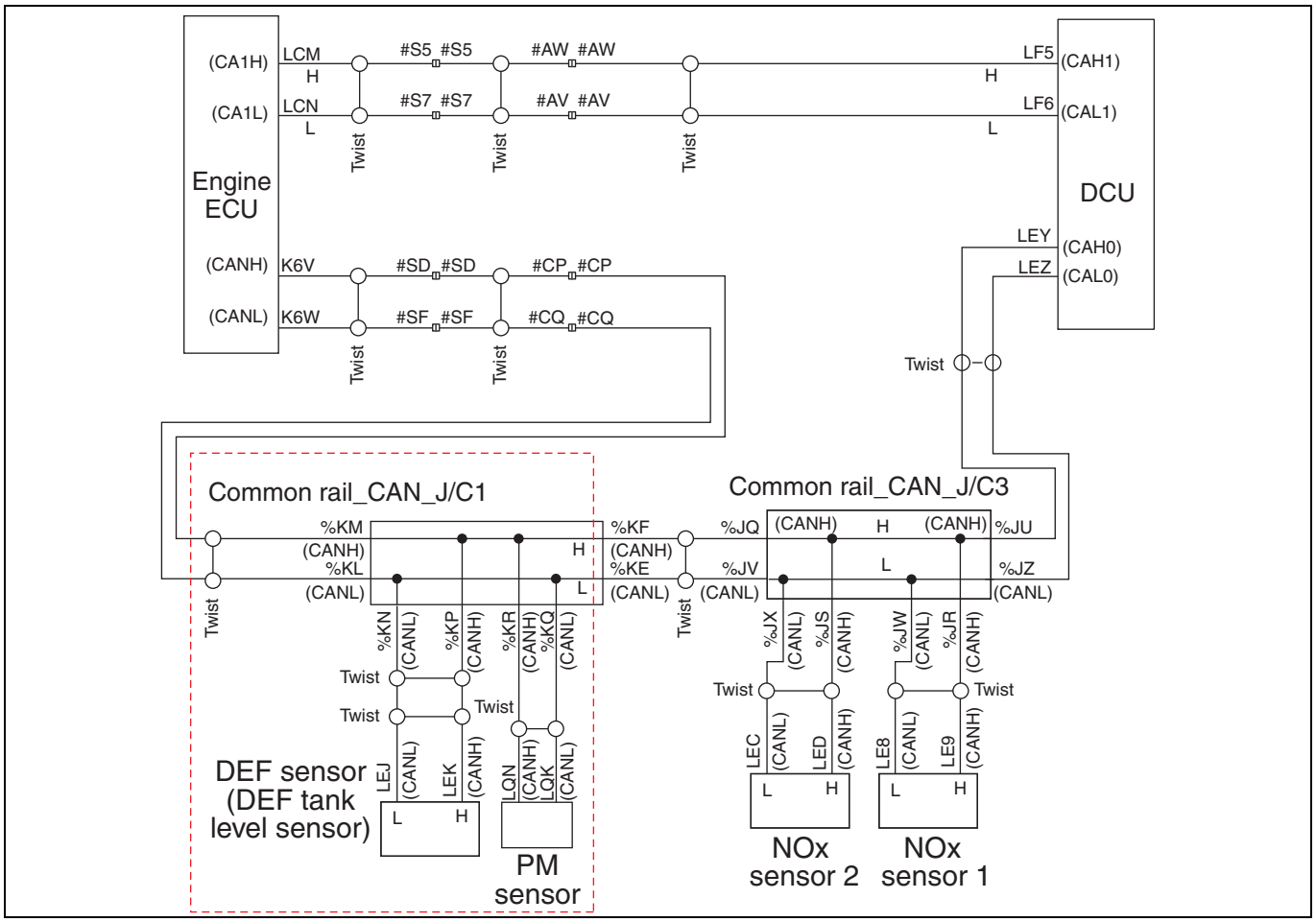


SAPH16F020400107

**1. Technical description**

- The DEF tank temperature sensor is connected via the engine ECU and DCU through CAN communication, and it sends and receives data.

**<Description of malfunction>**

- Failure of DEF tank temperature sensor 2 is received from CAN data.

**2. DTC set condition**

(1) DTC detection condition
Starter switch ON.

(2) Judgement criteria
Failure of DEF tank temperature sensor 2 (High failure flag) is received from CAN data.

**3. Reset condition**

- After having restored to the normal conditions.

**4. Indication, warning or system control regulation when the DTC is set.**

- DEF level indicator is stopped.

**5. Symptoms on the vehicle when the DTC is set**

**<Symptoms on the vehicle due to backup control (fail safe function)>**

- DEF level indicator is OFF.

**<Symptoms on the vehicle due to malfunction>**

- –

**6. Pre-inspection work**

- Check if the battery voltage is in the normal range.

**7. After-inspection work**

- Clear all past DTCs.
- Check if no DTC is stored after test drive.

**8. Estimated failure factors**

- DEF tank temperature sensor 2 failure.

## INSPECTION PROCEDURE: P2045

| 1 | Check the DTC detected (Engine) [HINO DX II ] |
|---|---|

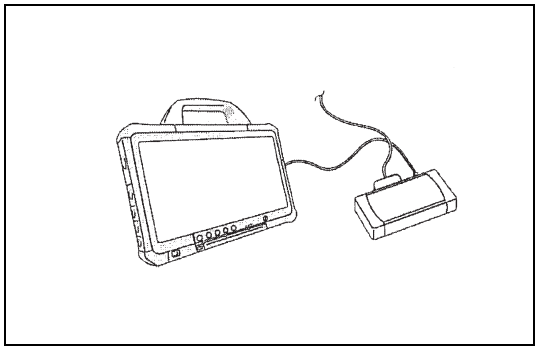

SAPH16F020400108

1. Connect the vehicle to HINO DX II .
2. Set the starter switch to the "ON" position.
3. Select [Engine] and check if a CAN communication system malfunction (U02A2) has been detected.

**Has DTC U02A2 been detected?**

**YES**

**Go to diagnosis procedure of a related DTC.**

**NO**

**Replace the DEF tank temperature sensor. Perform "After-inspection work" of INFORMATION section.**

# DTC: P2047

EN01H16F02040F03001033

## DTC: P2047 DEF injector - functional

INFORMATION

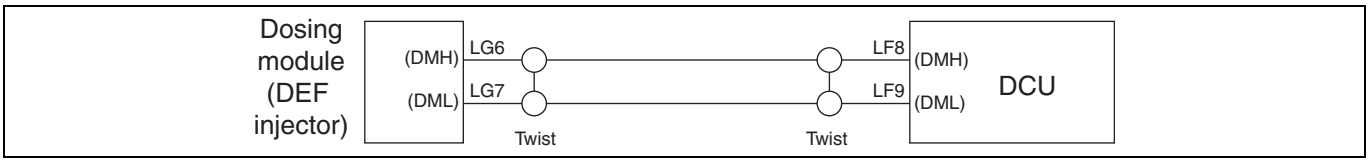


SAPH16F020400109

**1. Technical description**

- DEF dosing valve is controlled by DCU.
- Operation of the DEF dosing valve is checked by DCU based on the circuit current waveform.

**<Description of malfunction>**

- DEF injector failure is detected.

**2. DTC set condition**

(1) DTC detection condition
The engine is ON.
DEF injector duty cycle: > 0%, and DEF Pressure > 350 kPa {51 psi}, and 9 V < Battery < 16 V, and Time elapsed since DEF injector opening ≤ 0.0025 sec.

(2) Judgement criteria
Second order differential in the DEF injector circuit current waveform: Below 80 A/sec^2 detected 50 times consecutively.

**3. Reset condition**

- After having restored to the normal conditions.

**4. Indication, warning or system control regulation when the DTC is set.**

- MIL: ON
- DEF injection is stopped.
- NOx reduction quantity monitoring is aborted.
- If malfunction does not improve within 500 miles: engine output is restricted.
- If malfunction does not improve within 2,000 miles: vehicle speed is restricted.

**5. Symptoms on the vehicle when the DTC is set**

**<Symptoms on the vehicle due to backup control (fail safe function)>**

- NOx reduction function is prevented.
- Engine output is insufficient (when malfunction does not improve within 500 miles).
- Vehicle does not speed up (when malfunction does not improve within 2,000 miles).

**<Symptoms on the vehicle due to malfunction>**

- –

**6. Pre-inspection work**

- Check if the battery voltage is in the normal range.

**7. After-inspection work**

- Clear all past DTCs.
- Reset "Urea SCR related memory".
- Check if no DTC is stored after test drive.

**8. Estimated failure factors**

- DEF injector: Malfunction of injector
  * Clogging of crystallized DEF is suspected.

**NOTICE**

**As the crystals of DEF dissolve in the DEF solution, malfunction is sometimes improved by the several repeats of DEF injection.**

**So, when the injection is possible, the injector is not abnormal as if the crystals of DEF is accumulated on the injector head.**

## INSPECTION PROCEDURE: P2047

| 1 | Inspect the DEF injector unit |
|---|---|

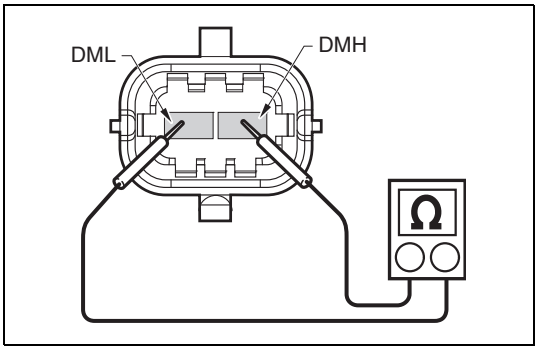


SAPH16F020400110

1. Set the starter switch to the "LOCK" position.
2. Disconnect the DEF injector connector.
3. Use the electrical tester to measure the resistance between the terminals of the DEF injector.

| Measurement conditions | Tester connections | Standard values |
|---|---|---|
| Starter switch: LOCK | DEF injector DML – DMH | 20°C {68°F}: 11.4 – 12.6 Ω |

**Do the measurements meet the standard value?**

**YES**

**Go to step 2.**

**NO**

**Replace the DEF injector.**
**Perform "After-inspection work" of INFORMATION section.**

| 2 | Inspect DEF injector (1) [HINO DX II ] |
|---|---|

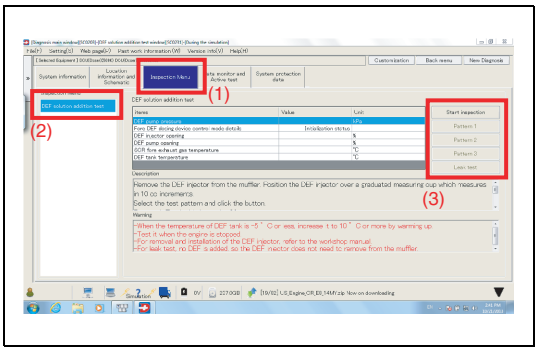


SAPH16F020400111

**NOTICE**
**Prepare a beaker or similar, plus a larger measuring vessel for measuring the DEF to be injected, before perform this inspection. (If the vessel is small, there is dispersion at the time of injection from the injector, and the measuring quantity decreases.)**

1. Set the starter switch to the "LOCK" position.
2. Remove the DEF injector from the muffler.

**HINT**

- **Refer to the workshop manual "SELECTIVE CATALYTIC REDUCTION (SCR)" in the chapter "EMISSION CONTROL (J08E)" (S5-CJ08E14* or S5-UJ08E14*) for removal and installation of the DEF injector.**
- **After removal of the DEF pipe from the injector, pour the DEF solution into the injector entrance. After pouring fully, leave for 1 minute, and then install the pipes.**

3. Connect the vehicle to HINO DX II .
4. Set the starter switch to the "ON" position.
5. Select [DCU].
6. Select [Inspection Menu] on HINO DX II menu and check the operation of the DEF injector.
   <Inspection procedure>
   (1) Select [Inspection Menu].
   (2) Select [DEF solution addition test].

(3) Perform addition test as instructed on the HINO DX II screen. (Perform all three patterns)

**NOTICE**
**When the DEF tank temperature is -5 °C (23 °F) or lower, perform warm-up to raise it to 10 °C (50 °F) or higher.**

**Is operation normal?**

**YES**

**Procedure completed.**
**Perform "After-inspection work" of INFORMATION section.**

**NO**

**Replace the DEF injector. (Perform DPR forced regeneration after replacement.)**
**Perform "After-inspection work" of INFORMATION section.**

# DTC: P2048

EN01H16F02040F03001034

## DTC: P2048 DEF injector - disconnection (Disconnection (low side))

INFORMATION

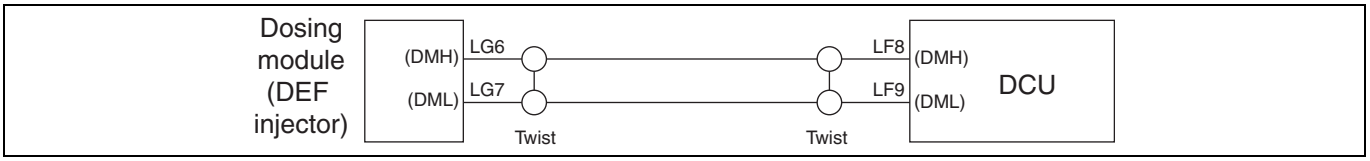


SAPH16F020400112

**1. Technical description**

- DEF dosing valve is controlled by DCU.
- DEF dosing valve detects disconnection and short-circuit based on the circuit voltage and signals in DCU.

**<Description of malfunction>**

- DEF injector failure is detected.

**2. DTC set condition**

(1) DTC detection condition
Starter switch ON.
DEF injector duty cycle > 0%

(2) Judgement criteria
DEF dosing valve circuit voltage (Low side): Below 0.2 V for more than 0.05 sec.

**3. Reset condition**

- After having restored to the normal conditions.

**4. Indication, warning or system control regulation when the DTC is set.**

- MIL: ON
- DEF injection is stopped.
- NOx reduction quantity monitoring is aborted.

**5. Symptoms on the vehicle when the DTC is set**

**<Symptoms on the vehicle due to backup control (fail safe function)>**

- Exhaust gas purification function is declined.

**<Symptoms on the vehicle due to malfunction>**

- –

**6. Pre-inspection work**

- Check if the battery voltage is in the normal range.

**7. After-inspection work**

- Clear all past DTCs.
- Check if no DTC is stored after test drive.

**8. Estimated failure factors**

- Disconnection or short-circuit in sensor harness
- Abnormal resistance of DEF injector
- Malfunction in DEF injector

## INSPECTION PROCEDURE: P2048

| 1 | Inspect for short-circuit in the DEF injector harness |
|---|---|

1. Check the connection of the DEF injector connector (Looseness and poor contact).

**Was any failure found?**

**YES**

**Connect securely, repair if needed.**
**Perform "After-inspection work" of INFORMATION section.**

**NO**

**Go to step 2.**

| 2 | Inspect the DEF injector unit |
|---|---|

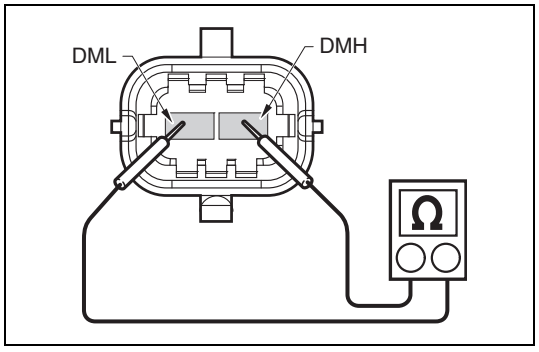

SAPH16F020400113

1. Set the starter switch to the "LOCK" position.
2. Disconnect the DEF injector connector.
3. Use the electrical tester to measure the resistance between the terminals of the DEF injector.

| Measurement conditions | Tester connections | Standard values |
|---|---|---|
| Starter switch: LOCK | DEF injector DML – DMH | 20 °C {68 °F}: 11.4 – 12.6 Ω |

**Do the measurements meet the standard value?**

**YES**

**Go to step 3.**

**NO**

**Replace the DEF injector.**
**Perform "After-inspection work" of INFORMATION section.**

| 3 | Inspect for short-circuit in the DEF injector harness |
|---|---|

1. Disconnect the DCU 86P connector.
2. Connect the signal check harness and use the electrical tester to measure the resistance between the terminals of the DCU 86P vehicle-side connector and the ground.

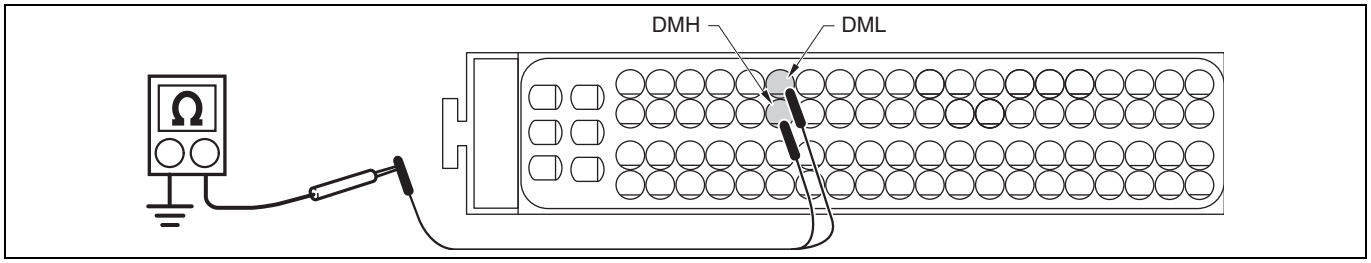


SAPH16F020400114

| Measurement conditions | Tester connections | Standard values |
|---|---|---|
| Starter switch: LOCK | DCU 86P vehicle-side connector<br>DML – Ground<br>DMH – Ground | ∞ Ω |

**Do the measurements meet the standard value?**

**YES**

**Go to step 4.**

**NO**

**Repair or replace the harness.**
**Perform "After-inspection work" of INFORMATION section.**

| 4 | Inspect disconnection of the DEF injector harness |
|---|---|

1. Connect the DEF injector connector.
2. Connect the signal check harness and use the electrical tester to measure the resistance between the terminals of the DCU 86P vehicle-side connector.

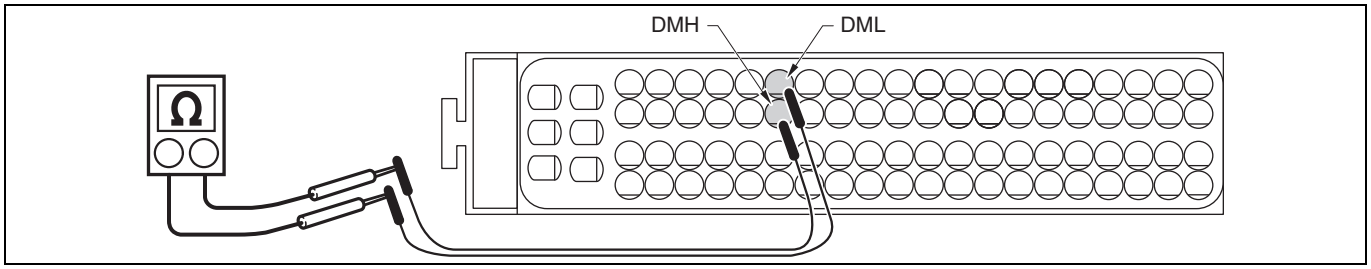


SAPH16F020400115

| Measurement conditions | Tester connections | Standard values |
|---|---|---|
| Starter switch: LOCK | DCU 86P vehicle-side connector DML – DMH | 20 °C {68 °F}: 11.4 – 12.6 Ω |

**Do the measurements meet the standard value?**

**YES**

**Go to step 5.**

**NO**

**Repair or replace the harness.**
**Perform "After-inspection work" of INFORMATION section.**

| 5 | Check the DTC detected (DCU) |
|---|---|

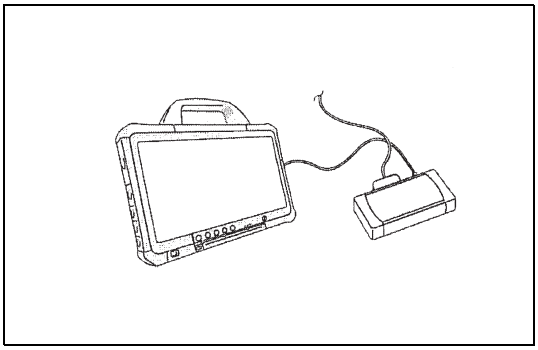

SAPH16F020400116

1. Perform an engine warm-up. (Water temperature: 60 °C {140 °F} or more)
2. Stop the engine and set the starter switch to the "LOCK" position.
3. Connect the vehicle to HINO DX II .
4. Set the starter switch to the "ON" position.
5. Select [DCU] and check if P2048 has been detected.

**Has DTC P2048 been detected?**

**YES**

**Replace the DCU. (Perform DPR forced regeneration after replacement.)**
**Perform "After-inspection work" of INFORMATION section.**

**NO**

**Procedure completed.**
**Perform "After-inspection work" of INFORMATION section.**

# DTC: P2049

EN01H16F02040F03001035

## DTC: P2049 DEF injector - disconnection (Disconnection (high side))

INFORMATION

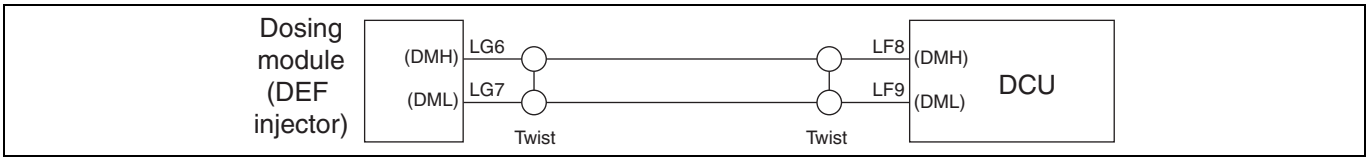


SAPH16F020400117

**1. Technical description**

- DEF dosing valve is controlled by DCU.
- DEF dosing valve detects disconnection and short-circuit based on the circuit voltage and signals in DCU.

**<Description of malfunction>**

- DEF injector failure is detected.

**2. DTC set condition**

(1) DTC detection condition
Starter switch ON.
DEF injector duty cycle > 0 %

(2) Judgement criteria
DEF dosing valve circuit voltage (High side): Below 2 V for more than 0.05 sec.

**3. Reset condition**

- After having restored to the normal conditions.

**4. Indication, warning or system control regulation when the DTC is set.**

- MIL: ON
- SCR malfunction light: ON
- DEF injection is stopped.
- NOx reduction quantity monitoring is aborted.
- If malfunction does not improve within 500 miles: engine output is restricted.
- If malfunction does not improve within 2,000 miles: vehicle speed is restricted.

**5. Symptoms on the vehicle when the DTC is set**

**<Symptoms on the vehicle due to backup control (fail safe function)>**

- Exhaust gas purification function is declined.
- Engine output is insufficient (when malfunction does not improve within 500 miles).
- Vehicle does not speed up (when malfunction does not improve within 2,000 miles).

**<Symptoms on the vehicle due to malfunction>**

- –

**6. Pre-inspection work**

- Check if the battery voltage is in the normal range.

**7. After-inspection work**

- Clear all past DTCs.
- Reset "Urea SCR related memory".
- Check if no DTC is stored after test drive.

**8. Estimated failure factors**

- Disconnection or short-circuit in sensor harness.
- Abnormal resistance of DEF injector.
- Malfunction in DEF injector.

## INSPECTION PROCEDURE: P2049

| 1 | Inspect the DEF injector connector |
|---|---|

1. Check the connection of the DEF injector connector (Looseness and poor contact).

**Was any failure found?**

**YES**

**Connect securely, repair if needed.**
**Perform "After-inspection work" of INFORMATION section.**

**NO**

**Go to step 2.**

| 2 | Inspect the DEF injector unit |
|---|---|

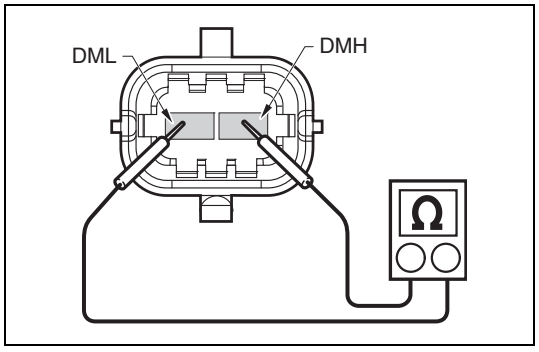

SAPH16F020400118

1. Set the starter switch to the "LOCK" position.
2. Disconnect the DEF injector connector.
3. Use the electrical tester to measure the resistance between the terminals of the DEF injector.

| Measurement conditions | Tester connections | Standard values |
|---|---|---|
| Starter switch: LOCK | DEF injector DML – DMH | 20 °C {68 °F}: 11.4 – 12.6 Ω |

**Do the measurements meet the standard value?**

**YES**

**Go to step 3.**

**NO**

**Replace the DEF injector.**
**Perform "After-inspection work" of INFORMATION section.**

| 3 | Inspect for short-circuit in the DEF injector harness |
|---|---|

1. Disconnect the DCU 86P connector.
2. Connect the signal check harness and use the electrical tester to measure the resistance between the terminals of the DCU 86P vehicle-side connector and the ground.

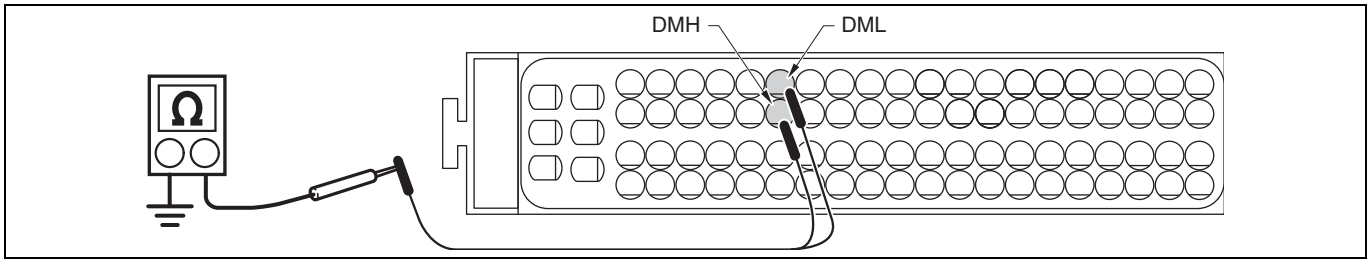


SAPH16F020400119

| Measurement conditions | Tester connections | Standard values |
|---|---|---|
| Starter switch: LOCK | DCU 86P vehicle-side connector<br>DML – Ground<br>DMH – Ground | ∞ Ω |

**Do the measurements meet the standard value?**

**YES**

**Go to step 4.**

**NO**

**Repair or replace the harness.**
**Perform "After-inspection work" of INFORMATION section.**

| 4 | Inspect disconnection of the DEF injector harness |
|---|---|

1. Connect the DEF injector connector.
2. Connect the signal check harness and use the electrical tester to measure the resistance between the terminals of the DCU 86P vehicle-side connector.

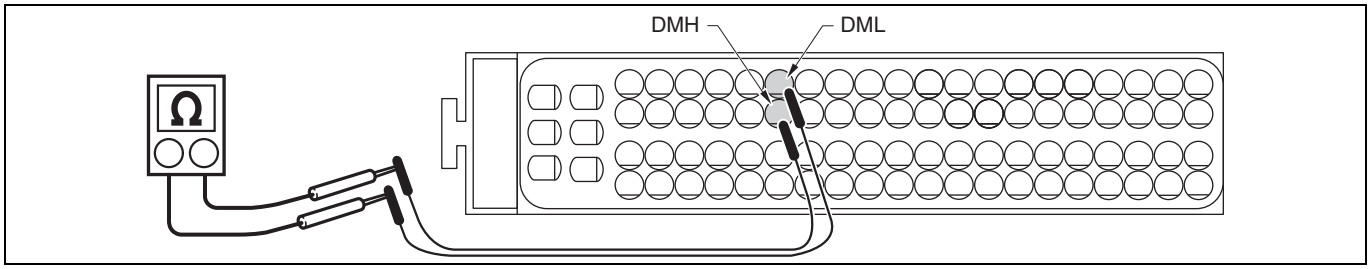


SAPH16F020400120

| Measurement conditions | Tester connections | Standard values |
|---|---|---|
| Starter switch: LOCK | DCU 86P vehicle-side connector DML – DMH | 20 °C {68 °F}: 11.4 – 12.6 Ω |

**Do the measurements meet the standard value?**

**YES**

**Go to step 5.**

**NO**

**Repair or replace the harness.**
**Perform "After-inspection work" of INFORMATION section.**

| 5 | DTC the DTC detected (DCU) [HINO DX II ] |
|---|---|

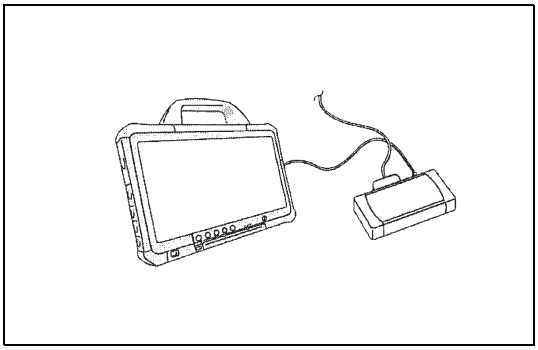

SAPH16F020400121

1. Perform an engine warm-up. (Water temperature: 60 °C {140 °F} or more)
2. Stop the engine and set the starter switch to the "LOCK" position.
3. Connect the vehicle to HINO DX II .
4. Set the starter switch to the "ON" position.
5. Select [DCU] and check if P2049 has been detected.

**Has DTC P2049 been detected?**

**YES**

**Replace the DCU. (Perform DPR forced regeneration after replacement.)**
**Perform "After-inspection work" of INFORMATION section.**

**NO**

**Procedure completed.**
**Perform "After-inspection work" of INFORMATION section.**

# DTC: P204B

EN01H16F02040F03001036

## DTC: P204B DEF pressure sensor - rationality

INFORMATION

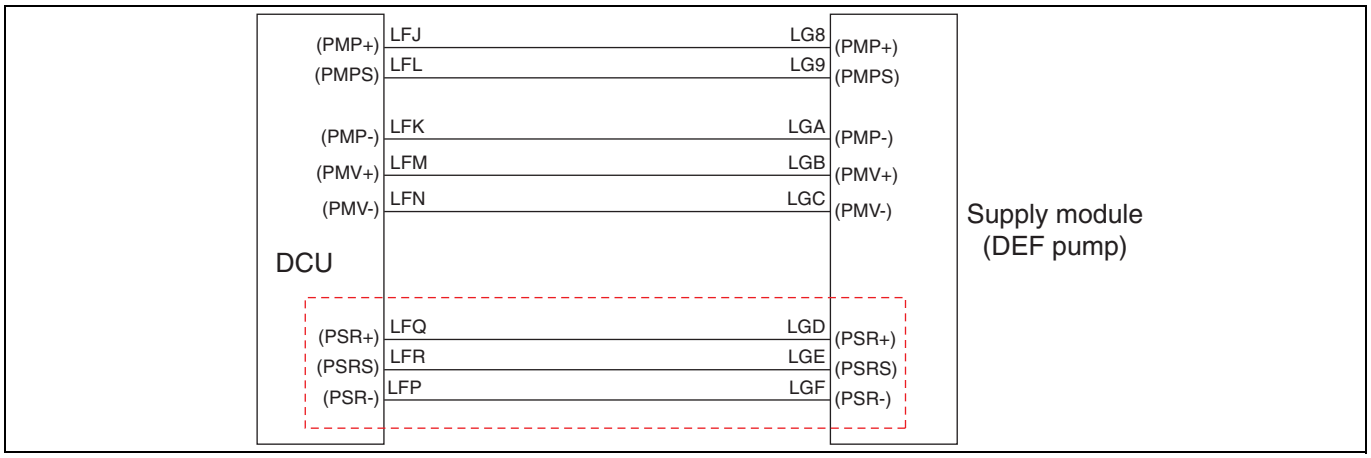


SAPH16F020400122

**1. Technical description**

- The pressure sensor in the DEF pump is used to confirm the pressure in the DEF pipe.

**<Description of malfunction>**

- DEF pressure sensor failure is detected.

**2. DTC set condition**

(1) DTC detection condition
The DCU power supply voltage is in the range of 10 to 16 V
Minimum DEF pressure during previous after-run > -50 kPa {-7.3 psi}
DEF defrosting is completed, and
Exhaust Gas Temperature (SCR inlet) < 150 °C {302 °F}, and
the exhaust gas temperature (SCR inlet) is below 150 °C {302 °F}

(2) Judgement criteria
DEF pressure > 50 kPa {7.3 psi} or < -50 kPa {-7.3 psi} for 1 sec.

**3. Reset condition**

- After having restored to the normal conditions.

**4. Indication, warning or system control regulation when the DTC is set.**

- MIL: ON
- DEF injection is stopped.
- NOx reduction quantity monitoring is aborted.

**5. Symptoms on the vehicle when the DTC is set**

**<Symptoms on the vehicle due to backup control (fail safe function)>**

- NOx reduction function is prevented.

**<Symptoms on the vehicle due to malfunction>**

- –

**6. Pre-inspection work**

- Check if the battery voltage is in the normal range.

**7. After-inspection work**

- Clear all past DTCs.
- Check if no DTC is stored after test drive.

**8. Estimated failure factors**

- DEF pump (pressure sensor) malfunction

## INSPECTION PROCEDURE: P204B

| 1 | Check the DTC detected (DCU) [HINO DX II ] |
|---|---|

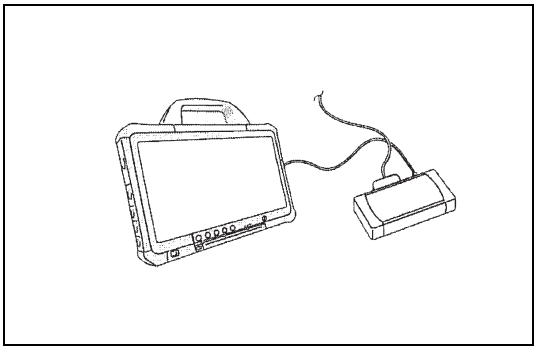

SAPH16F020400123

1. Set the starter switch to the "LOCK" position.
2. Connect the vehicle to HINO DX II .
3. After three minutes, set the starter switch to the "ON" position.
4. Select [DCU] and check whether P204B is past error code.

**Is DTC P204B post error code?**

**YES**

**Procedure completed.**
**Perform "After-inspection work" of INFORMATION section.**

**NO**

**Go to step 2.**

| 2 | Check the DTC detected (DCU) [HINO DX II ] |
|---|---|

1. Select [DCU] and check if any DTC below has been detected. P2047, P2049, P202E

**Has DTC P2047, P2049 and P202E been detected?**

**YES**

**Go to diagnosis procedure of a related DTC.**

**NO**

**Replace the DEF pump filter.**
**Go to step 3.**

| 3 | Check the DEF pump |
|---|---|

1. Conduct the DEF pump pressure monitor test by using HINO DXII.

**Was any failure found?**

**YES**

**Replace the DEF pump.**
**Perform "After-inspection work" of INFORMATION section.**

**NO**

**Procedure completed.**
**Perform "After-inspection work" of INFORMATION section.**

# DTC: P204C

EN01H16F02040F03001037

## DTC: P204C DEF pressure sensor - out of range (Out of range low)

INFORMATION

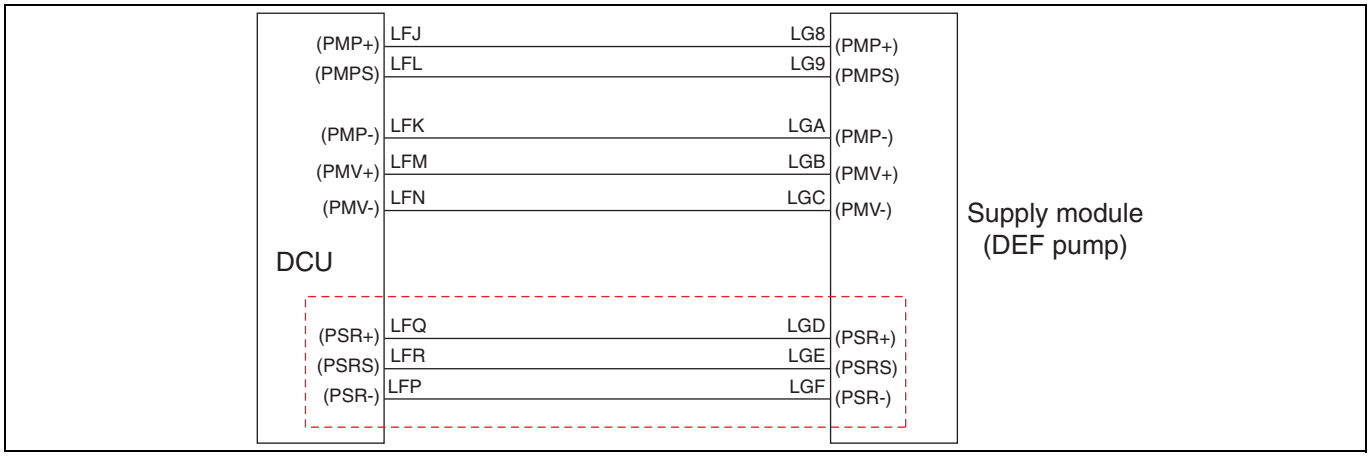


SAPH16F020400124

**1. Technical description**

- The pressure sensor in the DEF pump is used to confirm the pressure in the DEF pump.
- A short-circuit or disconnection in the DEF pump pressure sensor is detected with the DCU.

**<Description of malfunction>**

- Failure of the pressure sensor in the DEF pump is detected.

**2. DTC set condition**

(1) DTC detection condition
Starter switch ON.

(2) Judgement criteria
DEF pump pressure sensor circuit voltage < 0.25 V for more than 0.4 sec.

**3. Reset condition**

- After having restored to the normal conditions.

**4. Indication, warning or system control regulation when the DTC is set.**

- MIL: ON
- DEF injection is stopped.
- NOx reduction quantity monitoring is aborted.

**5. Symptoms on the vehicle when the DTC is set**

**<Symptoms on the vehicle due to backup control (fail safe function)>**

- NOx reduction function is prevented.

**<Symptoms on the vehicle due to malfunction>**

- –

**6. Pre-inspection work**

- Check if the battery voltage is in the normal range.

**7. After-inspection work**

- Clear all past DTCs.
- Check if no DTC is stored after test drive.

**8. Estimated failure factors**

- Harness disconnection or short-circuit
- Malfunction of DEF pump (pressure sensor)
  - Internal circuit disconnection or short-circuit
  - Abnormal output voltage

## INSPECTION PROCEDURE: P204C

| 1 | Inspect the DEF pump connector |
|---|---|

1. Check the connection of the DEF pump connector (Looseness and poor contact).

**Was any failure found?**

**YES**

**Connect securely, repair if needed.**
**Perform "After-inspection work" of INFORMATION section.**

**NO**

**Go to step 2.**

| 2 | Inspect the DEF pump (pressure sensor) unit |
|---|---|

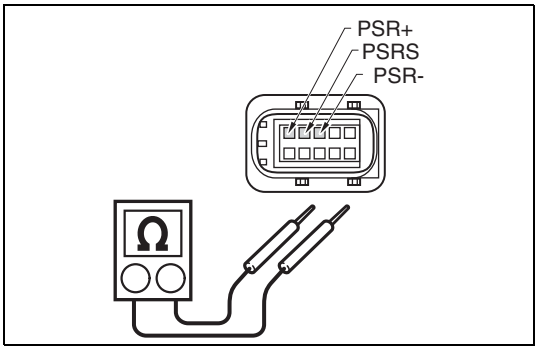

SAPH16F020400125

1. Set the starter switch to the "LOCK" position.
2. Remove the DEF pump connector.
3. Use the electrical tester to measure the resistance between the terminals of the DEF pump pressure sensor.

| Measurement conditions | Tester connections | Standard values |
|---|---|---|
| Starter switch: LOCK | DEF pump connector<br>(1) PSR+ – PSR-<br>(2) PSR+ – PSRS<br>(3) PSR- – PSRS | (1) 185 – 215 kΩ<br>(2) 148 – 172 kΩ<br>(3) 333 – 387 kΩ |

**Do the measurements meet the standard value?**

**YES**

**Go to step 3.**

**NO**

**Replace the DEF pump.**
**Perform "After-inspection work" of INFORMATION section.**

| 3 | Check for short-circuit in wire harness of DEF pump (pressure sensor) |
|---|---|

1. Disconnect the DCU 86P connector.
2. Connect the signal check harness and use the electrical tester to measure the resistance between the terminals of the DCU 86P vehicle-side connector and the ground.

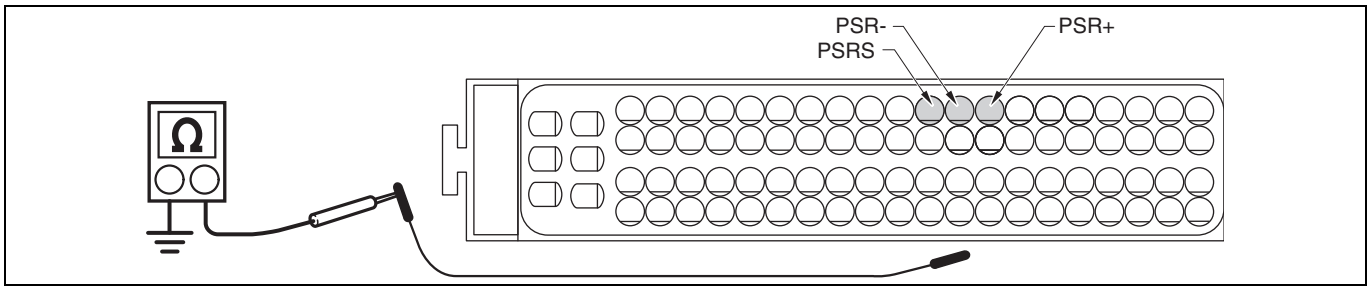


SAPH16F020400126

| Measurement conditions | Tester connections | Standard values |
|---|---|---|
| Starter switch: LOCK | DCU 86P vehicle-side connector<br>PSR+ – Ground<br>PSRS – Ground<br>PSR- – Ground | ∞ Ω |

**Do the measurements meet the standard value?**

**YES**

**Go to step 4.**

**NO**

**Repair or replace the harness.**
**Perform "After-inspection work" of INFORMATION section.**

| 4 | Check for disconnection in wire harness of DEF pump (pressure sensor) |
|---|---|

1. Connect the DEF pump connector.
2. Connect the signal check harness and use the electrical tester to measure the resistance between the terminals of the DCU 86P vehicle-side connector.

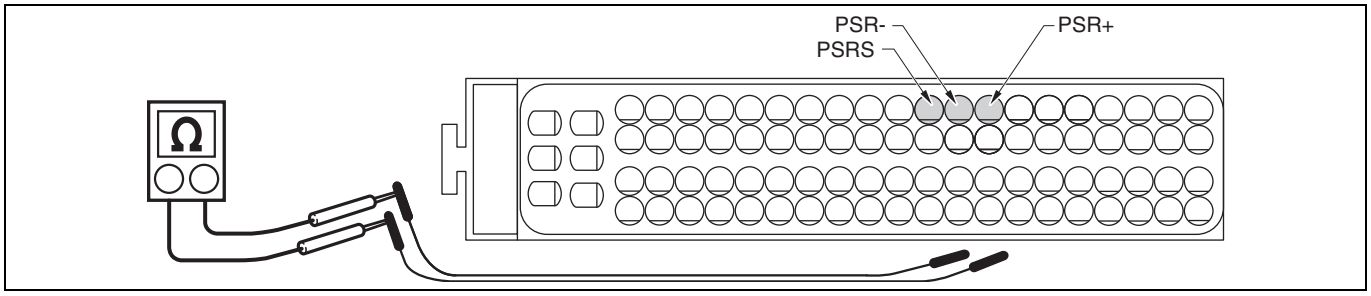


SAPH16F020400127

| Measurement conditions | Tester connections | Standard values |
|---|---|---|
| **Starter switch: LOCK** | **DCU 86P vehicle-side connector<br>(1) PSR+ – PSR-<br>(2) PSR+ – PSRS<br>(3) PSR- – PSRS** | **(1) 185 – 215 kΩ<br>(2) 148 – 172 kΩ<br>(3) 333 – 387 kΩ** |

**Do the measurements meet the standard value?**

**YES**

**Go to step 5.**

**NO**

**Repair or replace the harness.
Perform "After-inspection work" of INFORMATION section.**

| 5 | Check the DTC detected (DCU) [HINO DX ll ] |
|---|---|

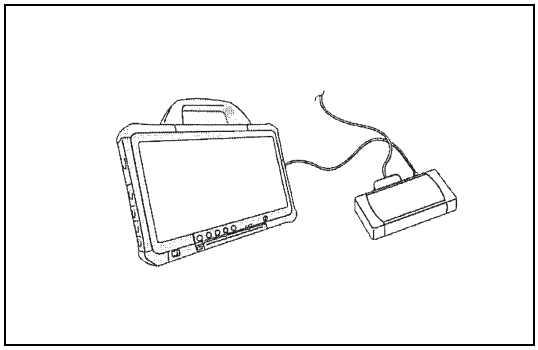

SAPH16F020400128

1. Set the starter switch to the "LOCK" position.
2. Connect the vehicle to HINO DX II .
3. Set the starter switch to the "ON" position.
4. Select [DCU] and check if DTC P204C has been detected.

**Has DTC P204C been detected?**

**YES**

**Replace the DCU.**
**Perform "After-inspection work" of INFORMATION section.**

**NO**

**Procedure completed.**
**Perform "After-inspection work" of INFORMATION section.**

# DTC: P204D

EN01H16F02040F03001038

## DTC: P204D DEF pressure sensor - out of range (Out of range high)

INFORMATION

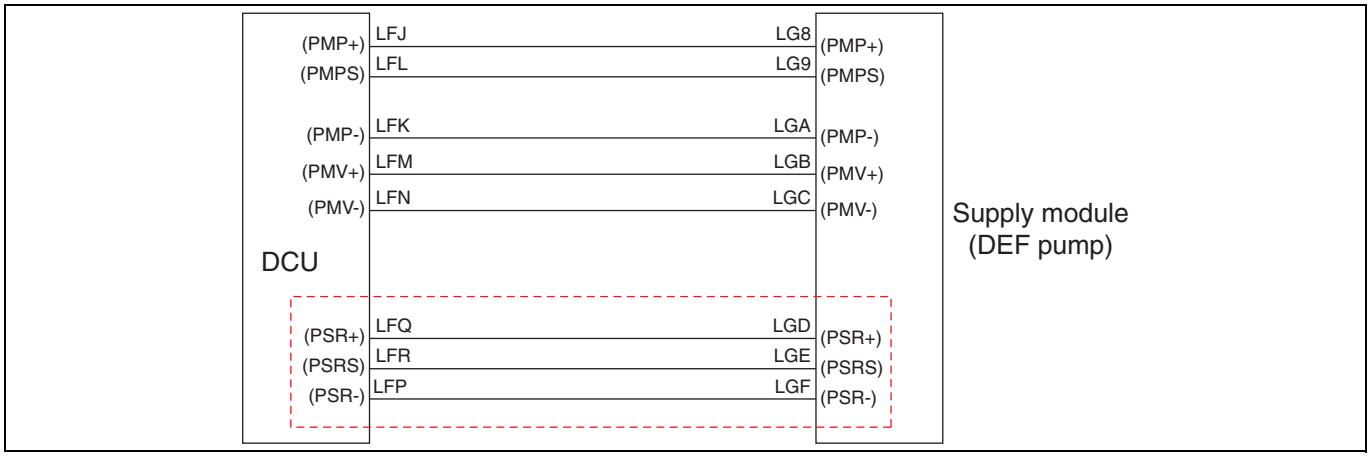


SAPH16F020400129

**1. Technical description**

- The pressure sensor in the DEF pump is used to confirm the pressure in the DEF pump.
- A short-circuit or disconnection in the DEF pump pressure sensor is detected with the DCU.

**<Description of malfunction>**

- Failure of the pressure sensor in the DEF pump is detected.

**2. DTC set condition**

(1) DTC detection condition
Starter switch ON.

(2) Judgement criteria
DEF pump pressure sensor circuit voltage > 4.75 V for more than 0.4 sec.

**3. Reset condition**

- After having restored to the normal conditions.

**4. Indication, warning or system control regulation when the DTC is set.**

- MIL: ON
- SCR malfunction light: ON
- DEF injection is stopped.
- NOx reduction quantity monitoring is aborted.
- If malfunction does not improve within 500 miles: engine output is restricted.
- If malfunction does not improve within 2,000 miles: vehicle speed is restricted.

**5. Symptoms on the vehicle when the DTC is set**

**<Symptoms on the vehicle due to backup control (fail safe function)>**

- NOx reduction function is prevented.
- Engine output is insufficient (when malfunction does not improve within 500 miles).
- Vehicle does not speed up (when malfunction does not improve within 2,000 miles).

**<Symptoms on the vehicle due to malfunction>**

- –

**6. Pre-inspection work**

- Check if the battery voltage is in the normal range.

**7. After-inspection work**

- Clear all past DTCs.
- Reset "Urea SCR related memory" by HINO DX II "Data monitor and Activation test".
- Check if no DTC is stored after test drive.

**8. Estimated failure factors**

- Harness disconnection or short-circuit
- Malfunction of DEF pump (pressure sensor)
  - Internal circuit disconnection or short-circuit
  - Abnormal output voltage

## INSPECTION PROCEDURE: P204D

| 1 | Inspect the DEF pump connector |
|---|---|

1. Check the connection of the DEF pump connector. (Looseness and poor contact).

**Was any failure found?**

**YES**

**Connect securely, repair if needed.**
**Perform "After-inspection work" of INFORMATION section.**

**NO**

**Go to step 2.**

| 2 | Inspect the DEF pump (pressure sensor) unit |
|---|---|

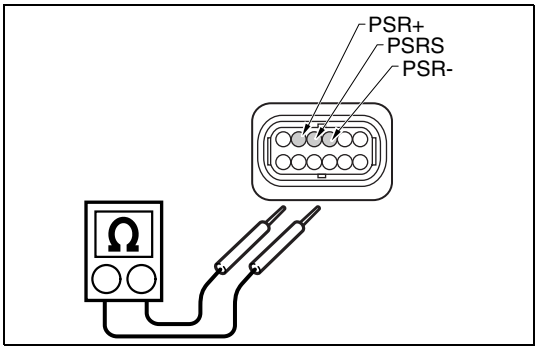

SAPH16F020400130

1. Set the starter switch to the "LOCK" position.
2. Disconnect the DEF pump connector.
3. Use the electrical tester to measure the resistance between the terminals of the DEF pump pressure sensor.

| Measurement conditions | Tester connections | Standard values |
|---|---|---|
| Starter switch: LOCK | DEF pump connector<br>(1) PSR+ – PSR-<br>(2) PSR+ – PSRS<br>(3) PSR- – PSRS | (1) 185 – 215 kΩ<br>(2) 148 – 172 kΩ<br>(3) 333 – 387 kΩ |

**Do the measurements meet the standard value?**

**YES**

**Go to step 3.**

**NO**

**Replace the DEF pump.**
**Perform "After-inspection work" of INFORMATION section.**

| 3 | Check for short-circuit in wire harness of DEF pump (pressure sensor) |
|---|---|

1. Disconnect the DCU 86P connector.
2. Connect the signal check harness and use the electrical tester to measure the resistance between the terminals of the DCU 86P vehicle-side connector and the ground.

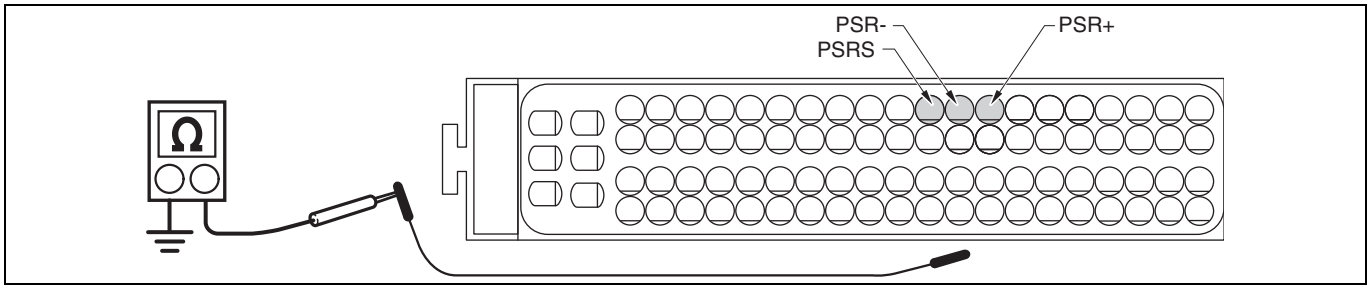


SAPH16F020400131

| Measurement conditions | Tester connections | Standard values |
|---|---|---|
| Starter switch: LOCK | DCU 86P vehicle-side connector<br>PSR+ – Ground<br>PSRS – Ground<br>PSR- – Ground | ∞ Ω |

**Do the measurements meet the standard value?**

**YES**

**Go to step 4.**

**NO**

**Repair or replace the harness.**
**Perform "After-inspection work" of INFORMATION section.**

| 4 | Check for disconnection in wire harness of DEF pump (pressure sensor) |
|---|---|

1. Connect the DEF pump connector.
2. Connect the signal check harness and use the electrical tester to measure the resistance between the terminals of the DCU 86P vehicle-side connector.

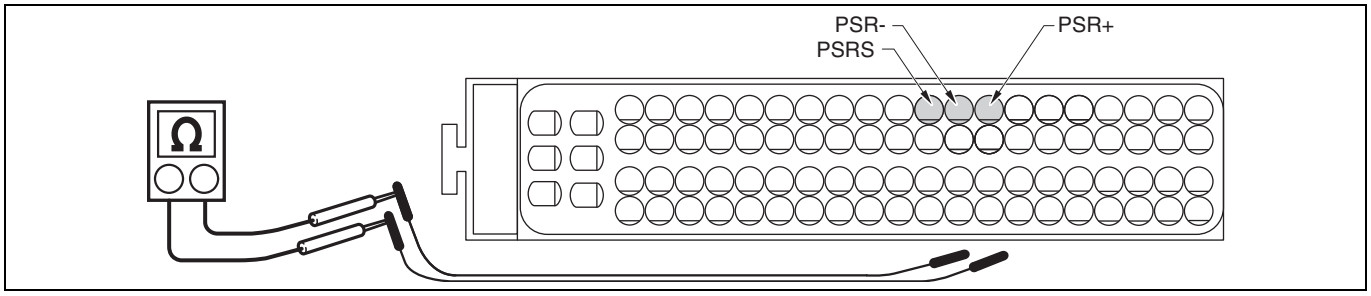


SAPH16F020400132

| Measurement conditions | Tester connections | Standard values |
|---|---|---|
| Starter switch: LOCK | DCU 86P vehicle-side connector<br>(1) PSR+ – PSR-<br>(2) PSR+ – PSRS<br>(3) PSR- – PSRS | (1) 185 – 215 kΩ<br>(2) 148 – 172 kΩ<br>(3) 333 – 387 kΩ |

**Do the measurements meet the standard value?**

**YES**

**Go to step 5.**

**NO**

**Repair or replace the harness.**
**Perform "After-inspection work" of INFORMATION section.**

| 5 | Check the DTC detected (DCU) [HINO DX ll ] |
|---|---|

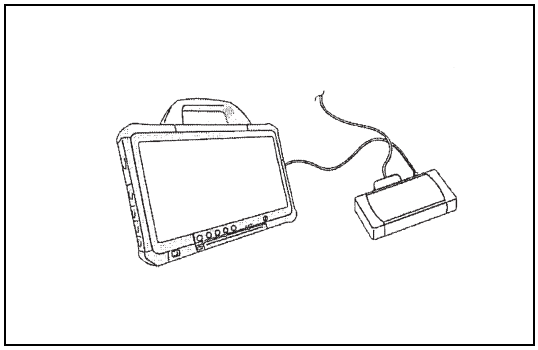

SAPH16F020400133

1. Set the starter switch to the "LOCK" position.
2. Connect the vehicle to HINO DX II .
3. Set the starter switch to the "ON" position.
4. Select [DCU] and check if P204D has been detected.

**Has P204D been detected?**

**YES**

**Replace the DCU.**
**Perform "After-inspection work" of INFORMATION section.**

**NO**

**Procedure completed.**
**Perform "After-inspection work" of INFORMATION section.**

# DTC: P205B

EN01H16F02040F03001039

## DTC: P205B DEF tank temperature sensor - rationality

INFORMATION

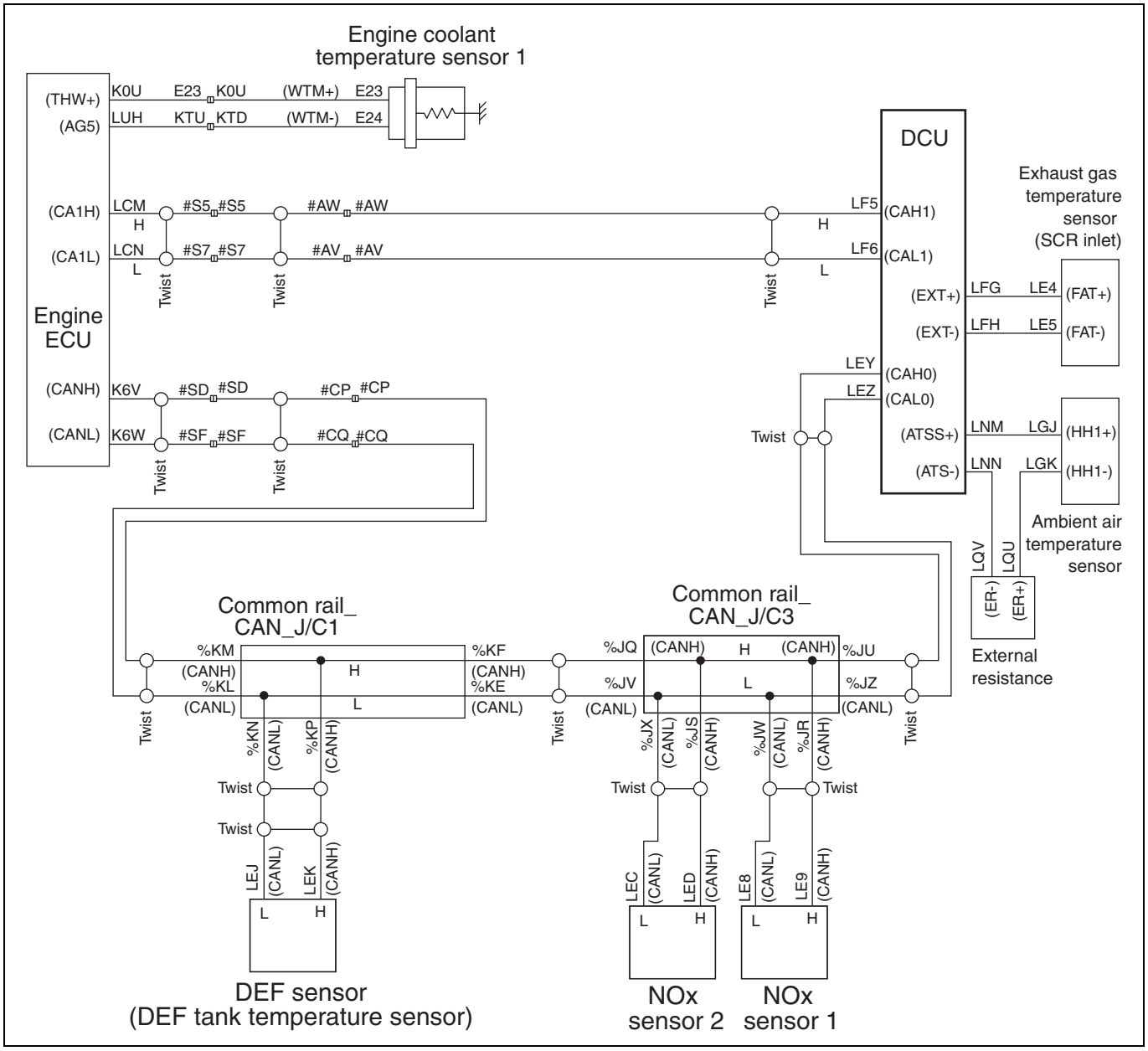


SAPH16F020400134

**1. Technical description**

- DEF tank temperature sensor rationality is checked by comparison with Ambient air temperature.

**<Description of malfunction>**

- Failure of DEF tank temperature sensor is detected.

**2. DTC set condition**

(1) DTC detection condition
Starter switch ON.
Difference between Ambient air temperature and Exhaust gas temperature (SCR inlet): < 8 °C {46.4 °F}
Difference of Ambient air temperature between Engine coolant temperature (from Engine ECU): < 8 °C {46.4 °F}
Difference between Exhaust gas temperature (SCR inlet) and Engine coolant temperature (from Engine ECU): < 8 °C {46.4 °F}

(2) Judgement criteria
Difference between DEF tank temperature and Ambient air temperature: > 50 °C {122 °F} for 2 sec.

**3. Reset condition**

- When the starter switch is ON and the difference among the outside temperature, exhaust temperature, and coolant temperature is less than 8 °C {46.4 °F}, the difference between the DEF tank temperature and the outside temperature is less than 50 °C {122 °F}.

**4. Indication, warning or system control regulation when the DTC is set.**

- MIL: ON

**5. Symptoms on the vehicle when the DTC is set**

**<Symptoms on the vehicle due to backup control (fail safe function)>**

- –

**<Symptoms on the vehicle due to malfunction>**

- Control does not work properly when DEF freezes.

**6. Pre-inspection work**

- Check if the battery voltage is in the normal range.

**7. After-inspection work**

- Clear all past DTCs.
- Check if no DTC is stored after test drive.

**8. Estimated failure factors**

- Poor connector contact or faulty connector fit
- Failure of DEF tank temperature sensor
- Failure of ambient air temperature sensor
- Failure of exhaust gas temperature sensor (SCR inlet)
- Failure of engine coolant temperature sensor

## INSPECTION PROCEDURE: P205B

| 1 | Inspect the DEF tank temperature sensor connector |
|---|---|

1. Check the connection of the DEF tank temperature sensor connector (Looseness and poor contact).

**Was any failure found?**

**YES**

**Connect securely, repair if needed.**
**Perform "After-inspection work" of INFORMATION section.**

**NO**

**Go to step 2.**

| 2 | Inspect the ambient air temperature sensor connector |
|---|---|

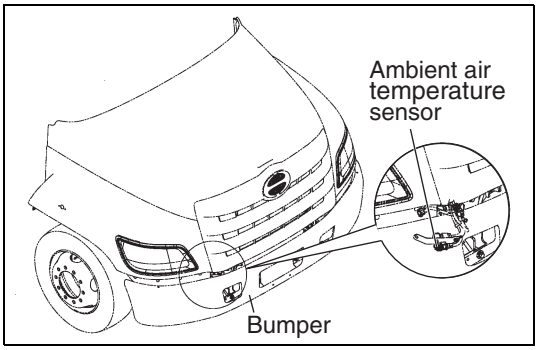

SAPH16F020400135

1. Check the connection of the ambient air temperature sensor connector (Looseness and poor contact).

**Was any failure found?**

**YES**

**Connect securely, repair if needed.**
**Perform "After-inspection work" of INFORMATION section.**

**NO**

**Go to step 3.**

| 3 | Inspect the ambient air temperature sensor |
|---|---|

1. Check the installation of the ambient air temperature sensor.
2. Make sure there is no dirt or damage to the ambient air temperature sensor.

**Was any failure found?**

**YES**

**Clean the ambient air temperature sensor and install it properly. If damaged, replace the ambient air temperature sensor.**
**Perform "After-inspection work" of INFORMATION section.**

**NO**

**Go to step 4.**

## 4 Inspect the ambient air temperature sensor unit

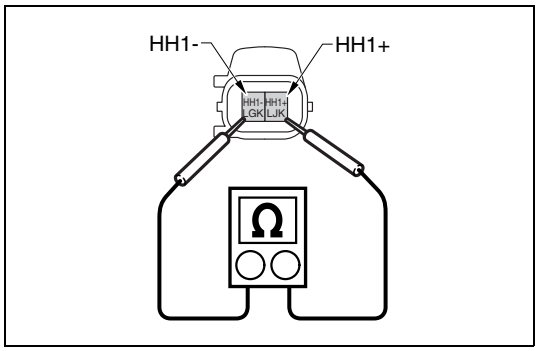

SAPH16F020400136

1. Set the starter switch to the "LOCK" position.
2. Disconnect the ambient air temperature sensor connector.
3. Use the electrical tester to measure the resistance between the terminals of the ambient air temperature sensor.

| Measurement conditions | Tester connections | Standard values |
|---|---|---|
| Starter switch: LOCK | Ambient air temperature sensor HH1+ – HH1- | 1.7 kΩ |

**Do the measurements meet the standard value?**

**YES**

**Go to step 5.**

**NO**

**Replace the ambient air temperature sensor.**
**Perform "After-inspection work" of INFORMATION section.**

## 5 Inspect the DCU 86P connector

1. Check the connection of the DCU 86P connector (Looseness and poor contact).

**Was any failure found?**

**YES**

**Connect securely, repair if needed.**
**Perform "After-inspection work" of INFORMATION section.**

**NO**

**Go to step 6.**

| 6 | Inspect the ambient air temperature sensor harness |
|---|---|

1. Connect the ambient air temperature sensor connector.
2. Disconnect the DCU 86P connector.
3. Connect the signal check harness and use the electrical tester to measure the resistance between the terminals of DCU 86P vehicle-side connector.

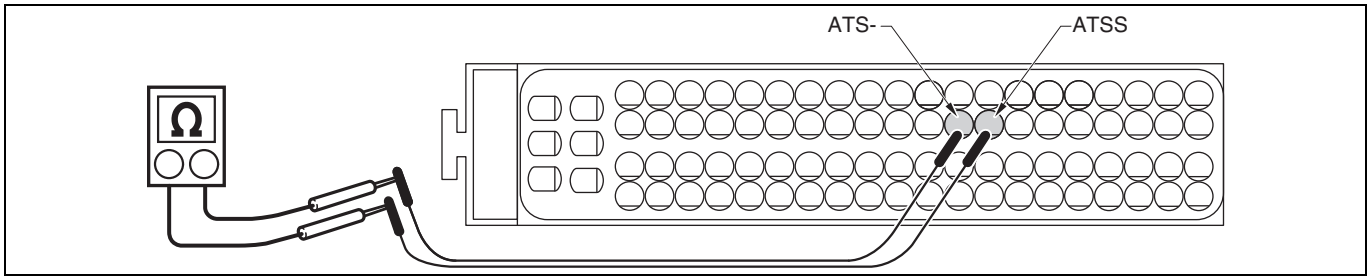


SAPH16F020400137

| Measurement conditions | Tester connections | Standard values |
|---|---|---|
| Starter switch: LOCK | DCU 86P vehicle-side connector ATSS – ATS- | 3.7 kΩ |

**Do the measurements meet the standard value?**

**YES**

**Go to step 9.**

**NO**

**Go to step 7.**

| 7 | Inspect the connector of the external resistor |
|---|---|

1. Check the connection of the external resistor connector (Looseness and poor contact).

**Was any failure found?**

**YES**

**Connect securely, repair if needed.**
**Perform "After-inspection work" of INFORMATION section.**

**NO**

**Go to step 8.**

| 8 | Inspect the external resistor connector unit |
|---|---|

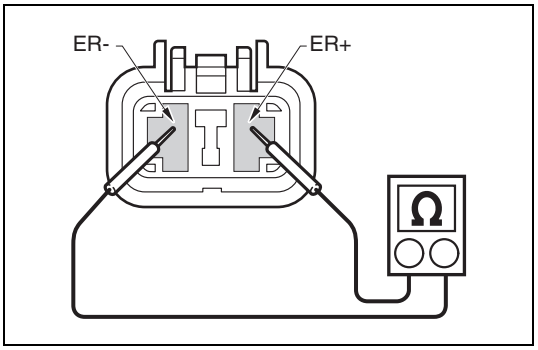


SAPH16F020400138

1. Disconnect the external resistor connector.
2. Use the electrical tester to measure the resistance between the terminals of the external resistor.

| Measurement conditions | Tester connections | Standard values |
|---|---|---|
| Starter switch: LOCK | External resistor ER+ – ER- | 2 kΩ |

**Do the measurements meet the standard value?**

**YES**

**Repair or replace the harness.**
**Perform "After-inspection work" of INFORMATION section.**

**NO**

**Replace the external resistor.**
**Perform "After-inspection work" of INFORMATION section.**

| 9 | Inspect the exhaust gas temperature sensor (SCR inlet) connector |
|---|---|

1. Check the connection of the exhaust gas temperature sensor (SCR inlet) connector (Looseness and poor contact).

**Was any failure found?**

**YES**

**Connect securely, repair if needed.**
**Perform "After-inspection work" of INFORMATION section.**

**NO**

**Go to step 10.**

| 10 | Inspect the exhaust gas temperature sensor (SCR inlet) |
|---|---|

1. Check the installation of the exhaust gas temperature sensor (SCR inlet).
2. Make sure there is no dirt or damage to the exhaust gas temperature sensor (SCR inlet).

**Was any failure found?**

YES

**Clean the exhaust gas temperature sensor (SCR inlet) and install it properly. If damaged, replace the exhaust gas temperature sensor (SCR inlet).**
**Perform "After-inspection work" of INFORMATION section.**

NO

**Go to step 11.**

## 11 Inspect the exhaust gas temperature sensor (SCR inlet) unit

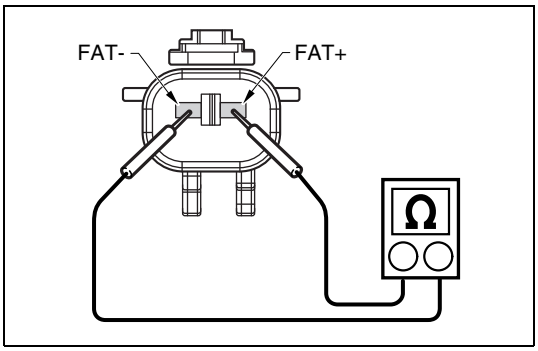

SAPH16F020400139

1. Disconnect the exhaust gas temperature sensor connector.
2. Use the electrical tester to measure the resistance between the terminals of the exhaust gas temperature sensor (SCR inlet).

| Measurement conditions | Tester connections | Standard values |
|---|---|---|
| Starter switch: LOCK | Exhaust gas temperature sensor (SCR inlet) FAT+ – FAT- | 220 Ω |

**Do the measurements meet the standard value?**

YES

**Go to step 12.**

NO

**Replace the exhaust gas temperature sensor (SCR inlet).**
**Perform "After-inspection work" of INFORMATION section.**

## 12 Inspect the engine coolant temperature sensor connector

1. Check the connection of the engine coolant temperature sensor connector (Looseness and poor contact).

**Was any failure found?**

YES

**Connect securely, repair if needed.**
**Perform "After-inspection work" of INFORMATION section.**

NO

**Go to step 13.**

| 13 | Inspect the engine coolant temperature sensor |
|---|---|

1. Check the installation of the engine coolant temperature sensor.
2. Make sure there is no dirt or damage to the engine coolant temperature sensor.

**Was any failure found?**

**YES**

**Clean the engine coolant temperature sensor and install it properly. If damaged, replace the engine coolant temperature sensor.**
**Perform "After-inspection work" of INFORMATION section.**

**NO**

**Go to step 14.**

| 14 | Inspect the engine coolant temperature sensor unit |
|---|---|

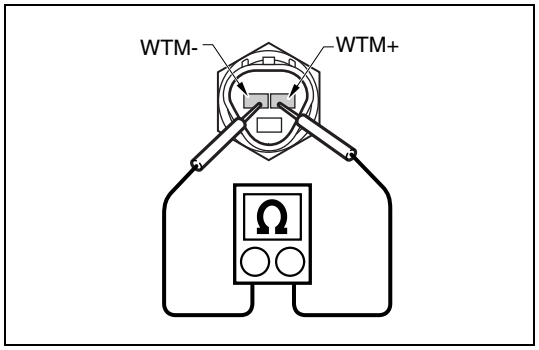

SAPH16F020400140

1. Disconnect an engine coolant temperature sensor connector.
2. Use the electrical tester to measure the resistance between the terminals of the engine coolant temperature sensor.

| Measurement conditions | Tester connections | Standard values |
|---|---|---|
| Starter switch: LOCK | Engine coolant temperature sensor WTM+ – WTM- | 20 °C {68 °F}: 2.32 – 2.59 kΩ<br>80 °C {176 °F}: 0.310 – 0.326 kΩ |

**Do the measurements meet the standard value?**

**YES**

**Go to step 15.**

**NO**

**Replace the engine coolant temperature sensor.**
**Perform "After-inspection work" of INFORMATION section.**

| 15 | Check the DTC detected (DCU) |
|---|---|

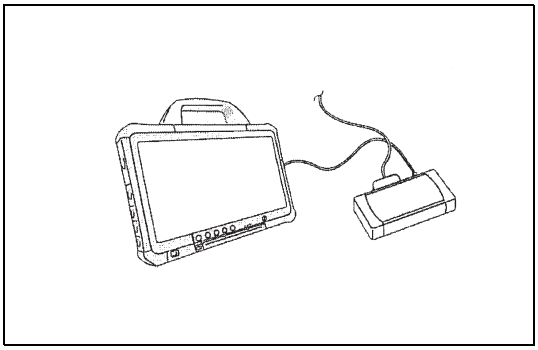

SAPH16F020400141

1. Connect the vehicle to HINO DX II .
2. Set the starter switch to the "ON" position.
3. Select [DCU] and check if P205B has been detected.

**Has DTC P205B been detected?**

**YES**

**Replace the DCU.**
**Perform "After-inspection work" of INFORMATION section.**

**NO**

**Procedure completed.**
**Perform "After-inspection work" of INFORMATION section.**

# DTC: P205C

EN01H16F02040F03001040

## DTC: P205C DEF tank temperature sensor - out of range (Out of range low)

INFORMATION

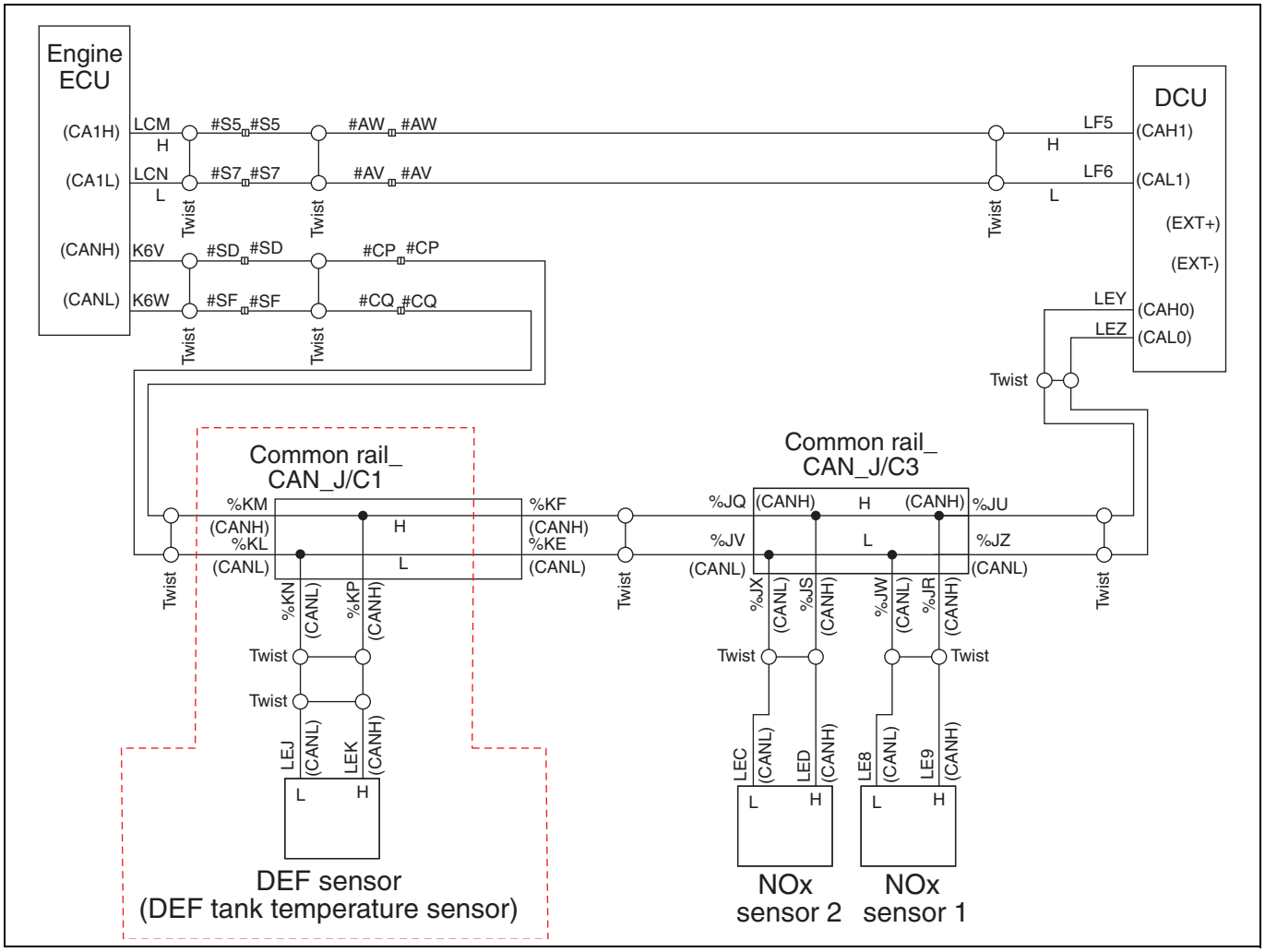


SAPH16F020400142

**1. Technical description**

- The DEF tank temperature sensor is connected via the engine ECU and DCU through CAN communication, and it sends and receives data.

**<Description of malfunction>**

- Failure of DEF tank temperature sensor 1 is received from CAN data.

**2. DTC set condition**

(1) DTC detection condition
Starter switch ON.

(2) Judgement criteria
Failure of DEF tank temperature sensor 1 (Low failure flag) is received from CAN data.

**3. Reset condition**

- After having restored to the normal conditions.

**4. Indication, warning or system control regulation when the DTC is set.**

- MIL: ON
- DEF level indicator is stopped.

**5. Symptoms on the vehicle when the DTC is set**

**<Symptoms on the vehicle due to backup control (fail safe function)>**

- DEF level indicator is OFF.

**<Symptoms on the vehicle due to malfunction>**

- –

**6. Pre-inspection work**

- Check if the battery voltage is in the normal range.

**7. After-inspection work**

- Clear all past DTCs.
- Check if no DTC is stored after test drive.

**8. Estimated failure factors**

- DEF tank temperature sensor 1 failure.

## INSPECTION PROCEDURE: P205C

| 1 | Check the DTC detected (Engine) [HINO DX II ] |
|---|---|

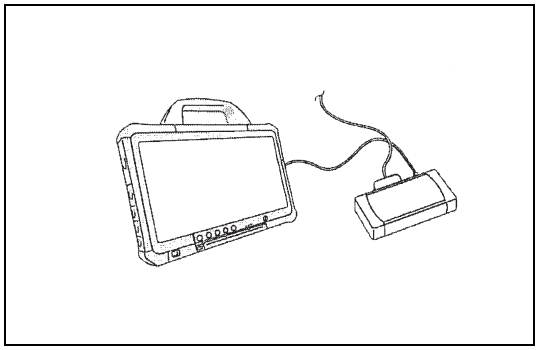

SAPH16F020400143

1. Connect the vehicle to HINO DX II .
2. Set the starter switch to the "ON" position.
3. Select [Engine] and check if a CAN communication system malfunction (U02A2) has been detected.

**Has DTC U02A2 been detected?**

**YES**

**Go to diagnosis procedure of a related DTC.**

**NO**

**Replace the DEF tank temperature sensor 1. Perform "After-inspection work" of INFORMATION section.**

# DTC: P205D

EN01H16F02040F03001041

## DTC: P205D DEF tank temperature sensor - out of range (Out of range high)

INFORMATION

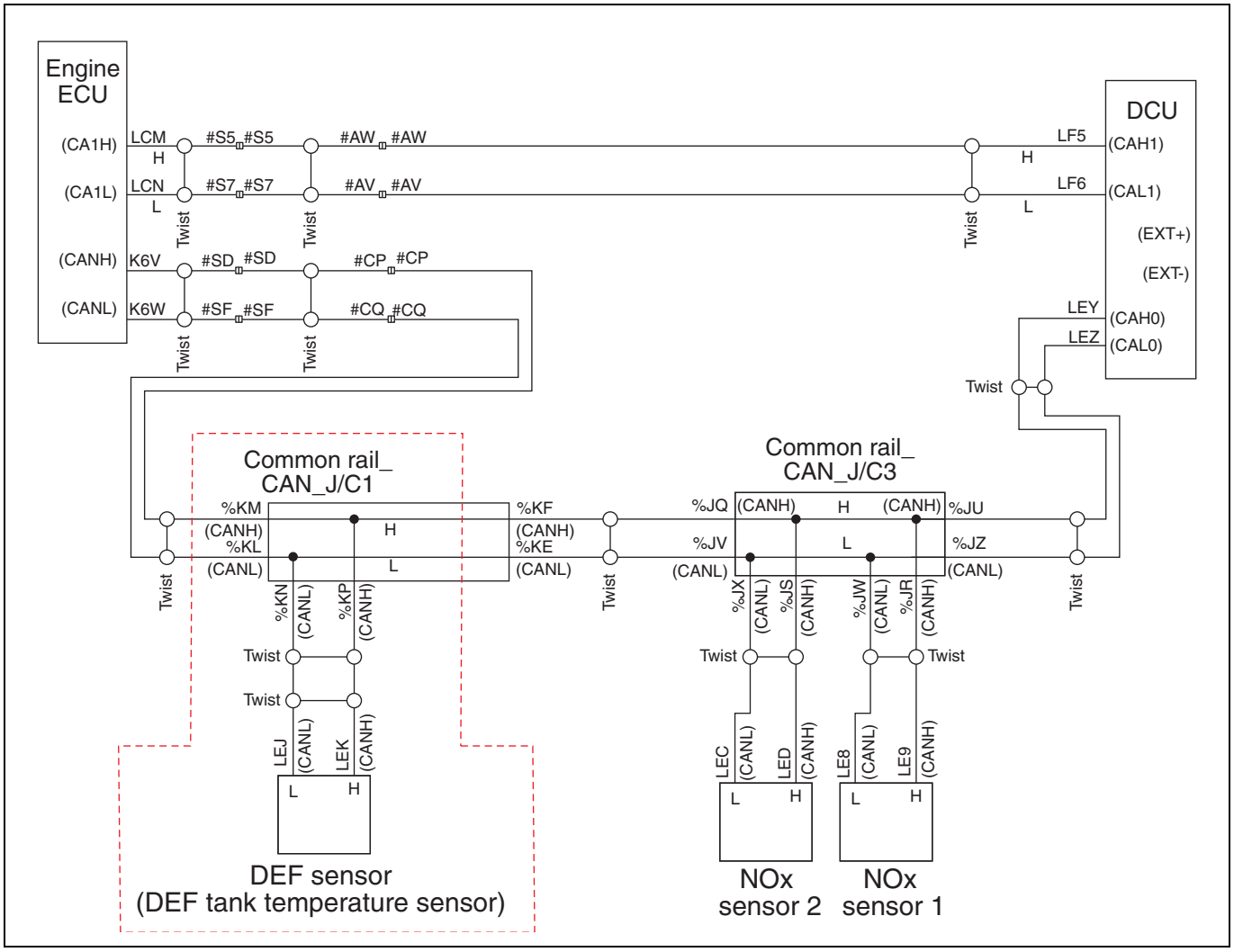


SAPH16F020400144

**1. Technical description**

- The DEF tank temperature sensor is connected via the engine ECU and DCU through CAN communication, and it sends and receives data.

**<Description of malfunction>**

- Failure of DEF tank temperature sensor 1 is received from CAN data.

**2. DTC set condition**

(1) DTC detection condition
Starter switch ON.

(2) Judgement criteria
Failure of DEF tank temperature sensor 1 (High failure flag) is received from CAN data.

**3. Reset condition**

- After having restored to the normal conditions.

**4. Indication, warning or system control regulation when the DTC is set.**

- MIL: ON
- DEF level indicator is stopped.

**5. Symptoms on the vehicle when the DTC is set**

**<Symptoms on the vehicle due to backup control (fail safe function)>**

- DEF level indicator is OFF.

**<Symptoms on the vehicle due to malfunction>**

- –

**6. Pre-inspection work**

- Check if the battery voltage is in the normal range.

**7. After-inspection work**

- Clear all past DTCs.
- Reset "Urea SCR related memory" by HINO DX II "Data monitor and Activation test".
- Check if no DTC is stored after test drive.

**8. Estimated failure factors**

- DEF tank temperature sensor 1 failure.

## INSPECTION PROCEDURE: P205D

| 1 | Check the DTC detected (Engine) [HINO DX II ] |
|---|---|

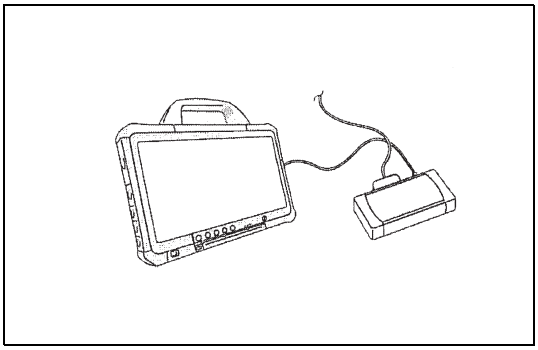

SAPH16F020400145

1. Connect the vehicle to HINO DX II .
2. Set the starter switch to the "ON" position.
3. Select [Engine] and check if a CAN communication system malfunction (U02A2) has been detected.

**Has DTC U02A2 been detected?**

**YES**

**Go to diagnosis procedure of a related DTC.**

**NO**

**Replace the DEF tank temperature sensor 1. Perform "After-inspection work" of INFORMATION section.**

# DTC: P206C

EN01H16F02040F03001042

## DTC: P206C DEF quality sensor - short circuit

INFORMATION

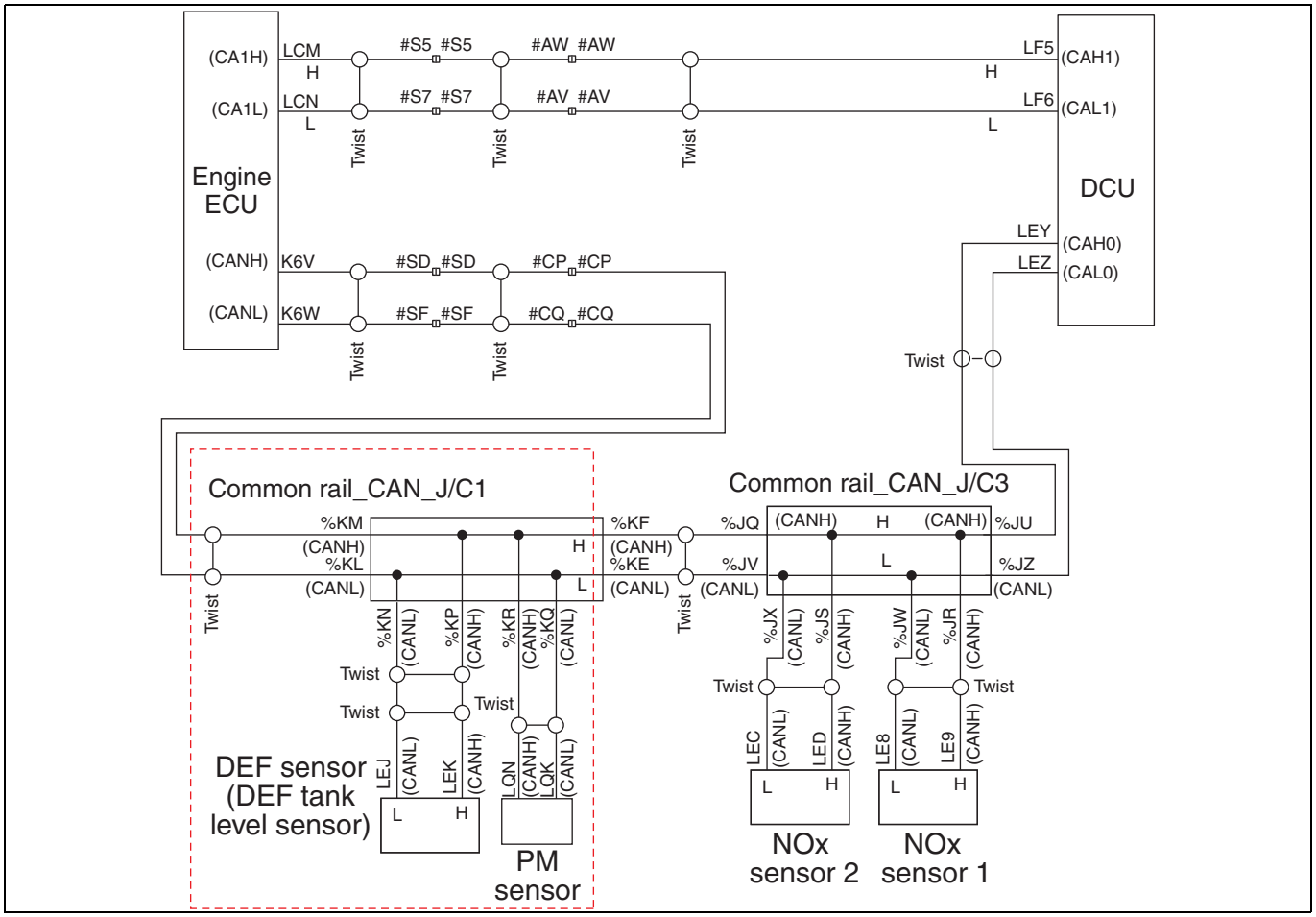


SAPH16F020400146

**1. Technical description**

- The DEF quality sensor is connected via the engine ECU and DCU through CAN communication, and it sends and receives data.

**<Description of malfunction>**

- Short circuit of DEF quality sensor is received from CAN data.

**2. DTC set condition**

(1) DTC detection condition
Starter switch ON.

(2) Judgement criteria
Failure of DEF quality sensor (flag) is received from CAN data.

**3. Reset condition**

- After having restored to the normal conditions.

**4. Indication, warning or system control regulation when the DTC is set.**

- MIL: ON
- DEF level indicator is stopped.

**5. Symptoms on the vehicle when the DTC is set**

**<Symptoms on the vehicle due to backup control (fail safe function)>**

- DEF level indicator is OFF.

**<Symptoms on the vehicle due to malfunction>**

- –

**6. Pre-inspection work**

- Check if the battery voltage is in the normal range.

**7. After-inspection work**

- Clear all past DTCs.
- Check if no DTC is stored after test drive.

**8. Estimated failure factors**

- DEF quality sensor failure.

## INSPECTION PROCEDURE: P206C

| 1 | Check the DTC detected (Engine) [HINO DX II ] |
|---|---|

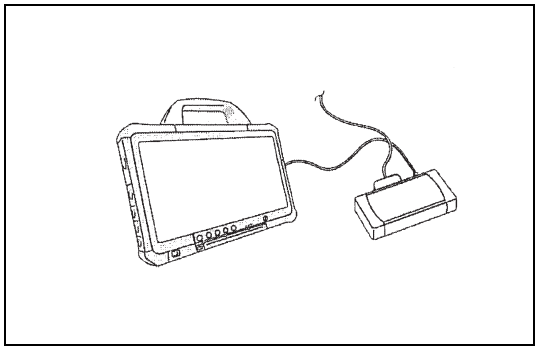

SAPH16F020400147

1. Connect the vehicle to HINO DX II .
2. Set the starter switch to the "ON" position.
3. Select [Engine] and check if a CAN communication system malfunction (U02A2) has been detected.

**Has DTC U02A2 been detected?**

**YES**

**Go to diagnostic procedure of a related DTC.**

**NO**

**Replace the DEF sensor.**
**Perform "After-inspection work" of INFORMATION section.**

# DTC: P206D

EN01H16F02040F03001043

## DTC: P206D DEF quality sensor - open circuit

INFORMATION

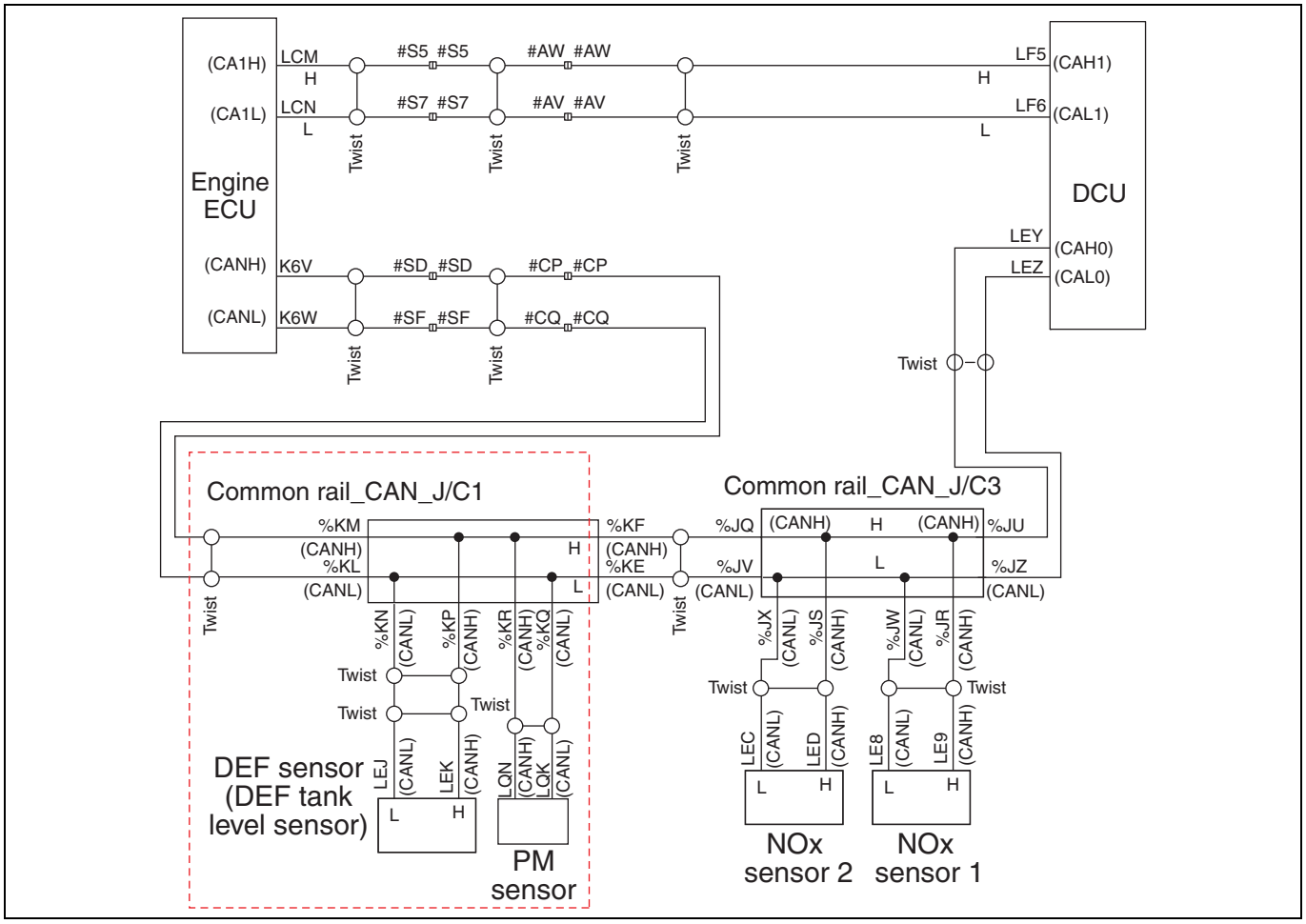


SAPH16F020400148

**1. Technical description**

- The DEF quality sensor is connected via the engine ECU and DCU through CAN communication, and it sends and receives data.

**<Description of malfunction>**

- Open circuit of DEF quality sensor is received from CAN data.

**2. DTC set condition**

(1) DTC detection condition
Starter switch ON.

(2) Judgement criteria
Failure of DEF quality sensor (flag) is received from CAN data.

**3. Reset condition**

- After having restored to the normal conditions.

**4. Indication, warning or system control regulation when the DTC is set.**

- MIL: ON
- DEF level indicator is stopped.

**5. Symptoms on the vehicle when the DTC is set**

**<Symptoms on the vehicle due to backup control (fail safe function)>**

- DEF level indicator is OFF.

**<Symptoms on the vehicle due to malfunction>**

- –

**6. Pre-inspection work**

- Check if the battery voltage is in the normal range.

**7. After-inspection work**

- Clear all past DTCs.
- Check if no DTC is stored after test drive.

**8. Estimated failure factors**

- DEF quality sensor failure.

## INSPECTION PROCEDURE: P206D

| 1 | Check the DTC detected (Engine) [HINO DX II ] |
|---|---|

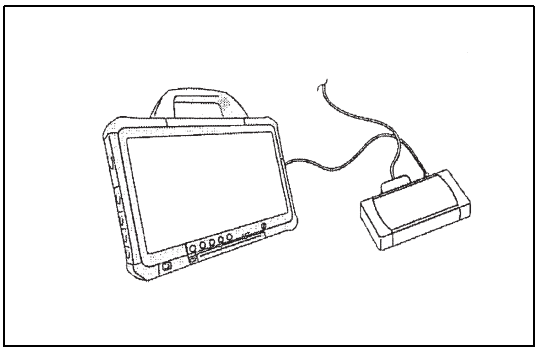

SAPH16F020400149

1. Connect the vehicle to HINO DX II .
2. Set the starter switch to the "ON" position.
3. Select [Engine] and check if a CAN communication system malfunction (U02A2) has been detected.

**Has DTC U02A2 been detected?**

**YES**

**Go to diagnostic procedure of a related DTC.**

**NO**

**Replace the DEF sensor.**
**Perform "After-inspection work" of INFORMATION section.**

# DTC: P208A

EN01H16F02040F03001044

## DTC: P208A DEF pump motor - circuit (Open load)

INFORMATION

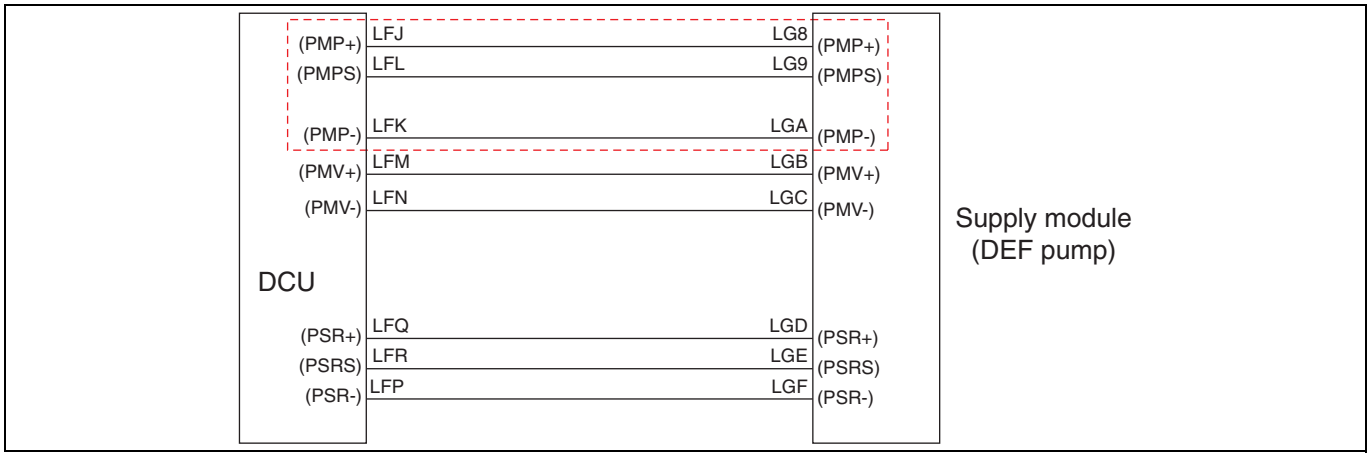


SAPH16F020400150

**1. Technical description**

- DCU determines failure of DEF pump motor based on DEF pump circuit voltage.

**<Description of malfunction>**

- Actuator malfunction of DEF pump module is detected.

**2. DTC set condition**

(1) DTC detection condition
Starter switch ON.
DEF pump module actuator Duty cycle > 0 %

(2) Judgement criteria
DEF pump module actuator voltage is in 2.7 V to 5 V range for 2 sec. or more.

**3. Reset condition**

- After having restored to the normal conditions.

**4. Indication, warning or system control regulation when the DTC is set.**

- MIL: ON
- SCR malfunction light: ON
- DEF injection is stopped.
- NOx reduction quantity monitoring is aborted.
- If malfunction does not improve within 500 miles: engine output is restricted.
- If malfunction does not improve within 2,000 miles: vehicle speed is restricted.

**5. Symptoms on the vehicle when the DTC is set**

**<Symptoms on the vehicle due to backup control (fail safe function)>**

- NOx reduction function is prevented.
- Engine output is insufficient (when malfunction does not improve within 500 miles)
- Vehicle does not speed up (when malfunction does not improve within 2,000 miles)

**6. Pre-inspection work**

- Check if the battery voltage is in the normal range.

**7. After-inspection work**

- Clear all past DTCs.
- Reset "Urea SCR related memory".
- Check if no DTC is stored after test drive.

**8. Estimated failure factors**

- Harness disconnection or short-circuit
- Looseness or poor contact of connector
- DEF pump motor malfunction

## INSPECTION PROCEDURE: P208A

| 1 | Inspect the DEF pump connector |
|---|---|

1. Check the connection of the DEF pump connector (Looseness and poor contact).

**Was any failure found?**

**YES**

**Connect securely, repair if needed.**
**Perform "After-inspection work" of INFORMATION section.**

**NO**

**Go to step 2.**

| 2 | Inspect the DCU 86P connector |
|---|---|

1. Check the connection of the DCU 86P connector (Looseness and poor contact).

**Was any failure found?**

**YES**

**Connect securely, repair if needed.**
**Perform "After-inspection work" of INFORMATION section.**

**NO**

**Go to step 3.**

| 3 | Inspect the DEF pump harness |
|---|---|

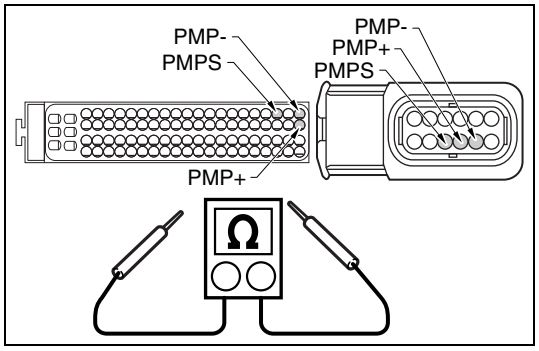


SAPH16F020400151

1. Set the starter switch to the "LOCK" position.
2. Disconnect DCU 86P connector.
3. Connect the signal check harness and use the electrical tester to measure the resistance between the DEF pump vehicle-side connector and each terminal of the DCU 86P vehicle-side connector.

| Measurement conditions | Tester connections | Standard values |
|---|---|---|
| Starter switch: LOCK | DEF pump vehicle-side connector – DCU 86P vehicle-side connector<br>PMP+ – PMP+<br>PMP- – PMP-<br>PMPS – PMPS | 1 Ω or less |

**Do the measurements meet the standard value?**

YES

**Replace the DEF pump, and go to step 4.**

NO

**Repair or replace the harness.**
**Perform "After-inspection work" of INFORMATION section.**

| 4 | **Check the DTC detected (DCU)** |
|---|---|

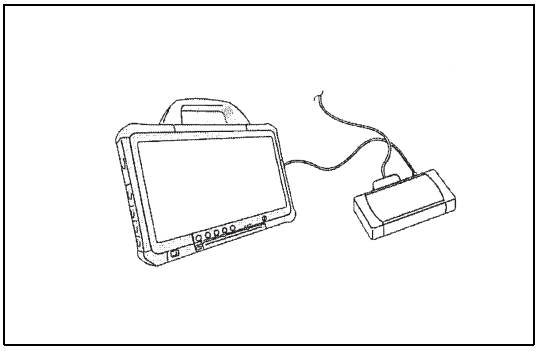

SAPH16F020400152

1. Connect the vehicle to HINO DX II .
2. Set the starter switch to the "ON" position.
3. Select [DCU] and check if P208A has been detected.

**Has DTC P208A been detected?**

YES

**Replace the DCU. (After replacing the DCU, perform a DPR forced regeneration.)**
**Perform "After-inspection work" of INFORMATION section.**

NO

**Procedure completed.**
**Perform "After-inspection work" of INFORMATION section.**

# DTC: P208B

EN01H16F02040F03001045

## DTC: P208B DEF pump motor - functional

INFORMATION

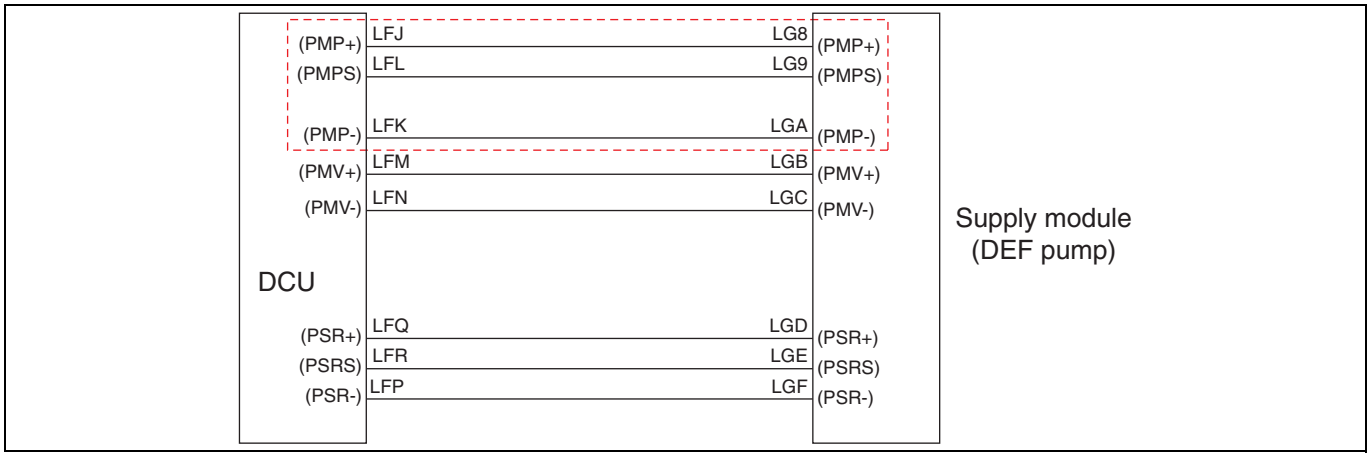


SAPH16F020400153

**1. Technical description**

- DEF pump motor is used to send DEF to the DEF injector.
- DEF pump motor operates according to the command values from DCU.

**<Description of malfunction>**

- Motor malfunction of DEF pump is detected.

**2. DTC set condition**

(1) DTC detection condition
Engine is running.
DEF has finished thawing and SCR inlet temperature > 150°C {302°F}

(2) Judgement criteria
|Target pump speed – actual speed| > 300 r/min for 5 sec. continuously.

**3. Reset condition**

- After having restored to the normal conditions.

**4. Indication, warning or system control regulation when the DTC is set.**

- MIL: ON
- DEF injection is stopped.
- NOx reduction quantity monitoring is aborted.

**5. Symptoms on the vehicle when the DTC is set**

**<Symptoms on the vehicle due to backup control (fail safe function)>**

- NOx reduction function is prevented.

**<Symptoms on the vehicle due to malfunction>**

- –

**6. Pre-inspection work**

- Check if the battery voltage is in the normal range.

**7. After-inspection work**

- Clear all past DTCs.
- Check if no DTC is stored after test drive.

**8. Estimated failure factors**

- DEF pump motor malfunction.

## INSPECTION PROCEDURE: P208B

| 1 | Inspection of the DEF pump pressure [HINO DX II ] |
|---|---|

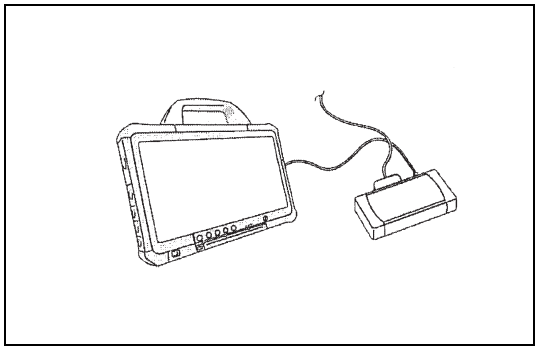

SAPH16F020400154

1. Set the starter switch to the "LOCK" position.
2. Replace the DEF pump with a new one.
3. Connect the vehicle to HINO DX II .
4. Start up the engine and keep the engine idling (about 10 minutes).
5. Select [DCU].
6. Select [DEF pump pressure] from the [Data monitor Setting] and check if the DEF pressure is maintained around 900 kPa (800 kPa – 1050 kPa) {131 psi (116 psi – 152 psi)}.

| Standard values |
|---|
| **DEF pressure:**<br>**900 kPa (800 kPa – 1,050 kPa) {131 psi (116 psi – 152 psi)}** |

**Do the measurements meet the standard value?**

**YES**

**Procedure completed.**
**Perform "After-inspection work" of INFORMATION section.**

**NO**

**Replace the DCU.**
**Perform "After-inspection work" of INFORMATION section.**

# DTC: P208C

EN01H16F02040F03001046

## DTC: P208C DEF pump motor - circuit (Circuit low)

INFORMATION

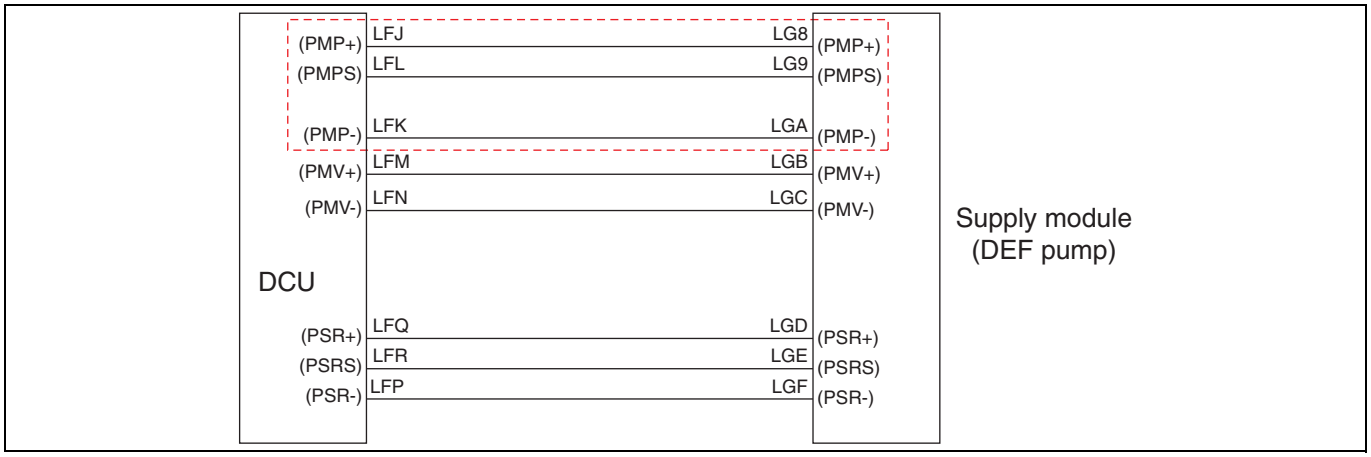


SAPH16F020400155

**1. Technical description**

- DCU determines failure of DEF pump motor based on DEF pump circuit voltage.

**<Description of malfunction>**

- Motor malfunction of DEF pump is detected.

**2. DTC set condition**

(1) DTC detection condition
Engine is running.
DEF pump is operating.

(2) Judgement criteria
DEF pump motor voltage: Less than 0.66 V for 2 sec. or more
DEF pump is actuating.

**3. Reset condition**

- After having restored to the normal conditions.

**4. Indication, warning or system control regulation when the DTC is set.**

- MIL: ON
- DEF injection is stopped.
- NOx reduction quantity monitoring is aborted.

**5. Symptoms on the vehicle when the DTC is set**

**<Symptoms on the vehicle due to backup control (fail safe function)>**

- NOx reduction function is prevented.

**6. Pre-inspection work**

- Check if the battery voltage is in the normal range.

**7. After-inspection work**

- Clear all past DTCs.
- Check if no DTC is stored after test drive.

**8. Estimated failure factors**

- Harness disconnection or short-circuit
- Looseness or poor contact of connector
- DEF pump motor malfunction

## INSPECTION PROCEDURE: P208C

| 1 | Inspect the DEF pump connector |
|---|---|

1. Check the connection of the DEF pump connector (Looseness and poor contact).

**Was any failure found?**

| YES | NO |
|---|---|
| **Connect securely, repair if needed. Perform "After-inspection work" of INFORMATION section.** | **Go to step 2.** |

| 2 | Inspect the DCU 86P connector |
|---|---|

1. Check the connection of the DCU 86P connector (Looseness and poor contact).

**Was any failure found?**

| YES | NO |
|---|---|
| **Connect securely, repair if needed. Perform "After-inspection work" of INFORMATION section.** | **Go to step 3.** |

| 3 | Check the DEF pump wire harness |
|---|---|

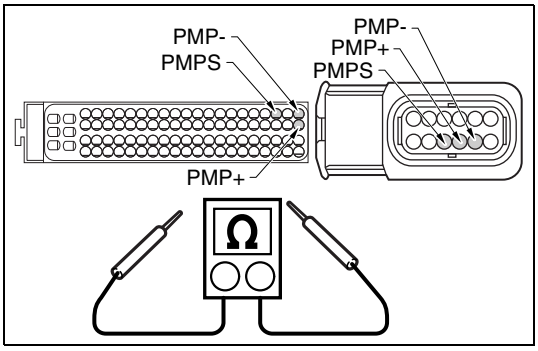

SAPH16F020400156

1. Set the starter switch to the "LOCK" position.
2. Disconnect the DCU 86P connector and the DEF pump connector.
3. Connect the signal check harness and use the electrical tester to measure the resistance between the DEF pump and each terminal of the DCU 86P vehicle-side connector.

| Measurement conditions | Tester connections | Standard values |
|---|---|---|
| **Starter switch: LOCK** | **DEF pump vehicle-side connector – DCU 86P vehicle-side connector<br>PMP+ – PMP+<br>PMP- – PMP-<br>PMPS – PMPS** | **1 Ω or less** |

**Do the measurements meet the standard value?**

YES

**Replace the DEF pump, and go to step 4.**

NO

**Repair or replace the harness.**
**Perform "After-inspection work" of INFORMATION section.**

| 4 | **Check the DTC detected (DCU)** |
|---|---|

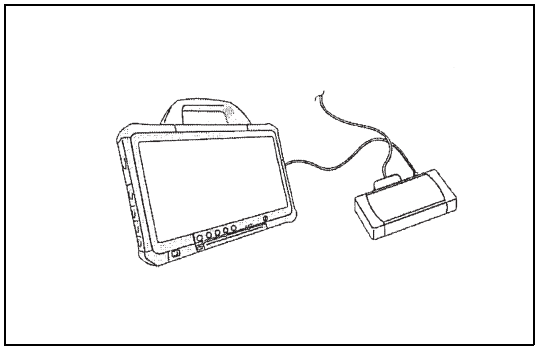

SAPH16F020400157

1. Set the starter switch to the "LOCK" position.
2. Connect the vehicle to HINO DX II .
3. Set the starter switch to the "ON" position.
4. Select [DCU] and check if P208C has been detected.

**Has DTC P208C been detected?**

YES

**Replace the DCU. (After replacing, perform DPR forced regeneration.)**
**Perform "After-inspection work" of INFORMATION section.**

NO

**Procedure completed.**
**Perform "After-inspection work" of INFORMATION section.**

# DTC: P208D

EN01H16F02040F03001047

## DTC: P208D DEF pump motor - circuit (Circuit high)

INFORMATION

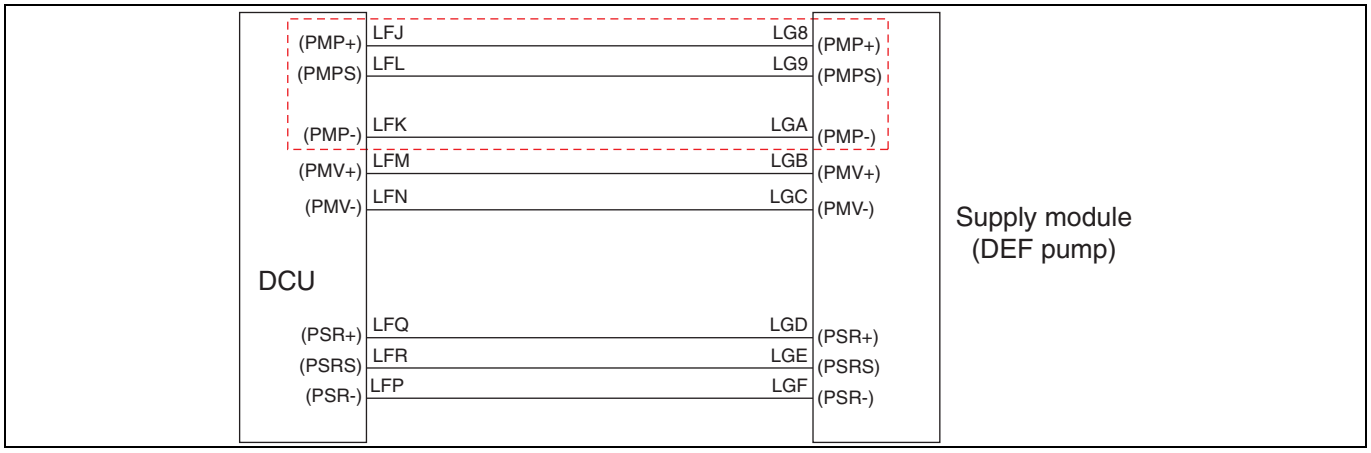


SAPH16F020400158

**1. Technical description**

- DCU determines failure of DEF pump motor based on DEF pump circuit voltage.

**<Description of malfunction>**

- Motor malfunction of DEF pump is detected.

**2. DTC set condition**

(1) DTC detection condition
Engine is running.
DEF pump is operating.

(2) Judgement criteria
DEF pump motor voltage: 2.7 V for 2 sec. or more
DEF pump is actuating.

**3. Reset condition**

- After having restored to the normal conditions.

**4. Indication, warning or system control regulation when the DTC is set.**

- MIL: ON
- DEF injection is stopped.
- NOx reduction quantity monitoring is aborted.

**5. Symptoms on the vehicle when the DTC is set**

**<Symptoms on the vehicle due to backup control (fail safe function)>**

- NOx reduction function is prevented.

**6. Pre-inspection work**

- Check if the battery voltage is in the normal range.

**7. After-inspection work**

- Clear all past DTCs.
- Check if no DTC is stored after test drive.

**8. Estimated failure factors**

- Harness disconnection or short-circuit
- Looseness or poor contact of connector
- DEF pump motor malfunction

## INSPECTION PROCEDURE: P208D

| 1 | Inspect the DEF pump connector |
|---|---|

1. Check the connection of the DEF pump connector (Looseness and poor contact).

**Was any failure found?**

**YES**

**Connect securely, repair if needed.**
**Perform "After-inspection work" of INFORMATION section.**

**NO**

**Go to step 2.**

| 2 | Inspect the DCU 86P connector |
|---|---|

1. Check the connection of the DCU 86P connector (Looseness and poor contact).

**Was any failure found?**

**YES**

**Connect securely, repair if needed.**
**Perform "After-inspection work" of INFORMATION section.**

**NO**

**Go to step 3.**

| 3 | Check the DEF pump wire harness |
|---|---|

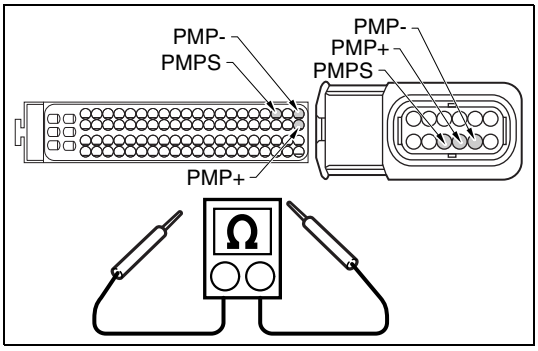


SAPH16F020400159

1. Set the starter switch to the "LOCK" position.
2. Disconnect the DCU 86P connector and the DEF pump connector.
3. Connect the signal check harness and use the electrical tester to measure the resistance between the DEF pump and each terminal of the DCU 86P vehicle-side connector.

| Measurement conditions | Tester connections | Standard values |
|---|---|---|
| Starter switch: LOCK | DEF pump vehicle-side connector – DCU 86P vehicle-side connector<br>PMP+ – PMP+<br>PMP- – PMP-<br>PMPS – PMPS | 1 Ω or less |

**Do the measurements meet the standard value?**

YES

**Replace the DEF pump, and go to step 4.**

NO

**Repair or replace the harness.**
**Perform "After-inspection work" of INFORMATION section.**

| 4 | **Check the DTC detected (DCU)** |
|---|---|

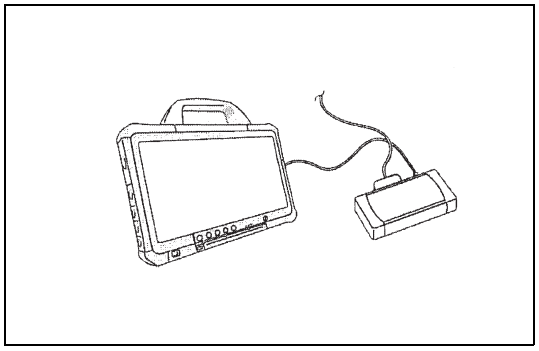

SAPH16F020400160

1. Set the starter switch to the "LOCK" position.
2. Connect the vehicle to HINO DX II .
3. Set the starter switch to the "ON" position.
4. Select [DCU] and check if P208D has been detected.

**Has DTC P208D been detected?**

YES

**Replace the DCU. (After replacing the DCU, perform a DPR forced regeneration.)**
**Perform "After-inspection work" of INFORMATION section.**

NO

**Procedure completed.**
**Perform "After-inspection work" of INFORMATION section.**

# DTC: P20A0

EN01H16F02040F03001048

## DTC: P20A0 Reverting valve for DEF pump - circuit (Open load)

INFORMATION

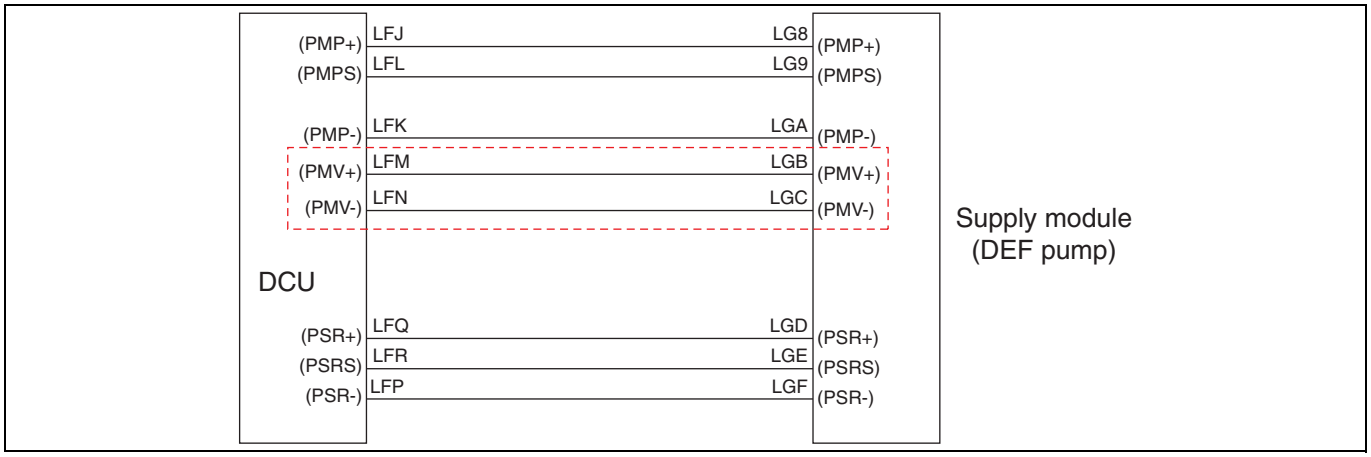


SAPH16F020400161

**1. Technical description**

- DCU detects the circuit failure based on the circuit voltage of the DEF pump reverting valve.

**<Description of malfunction>**

- Failure of reverting valve inside DEF pump is detected.

**2. DTC set condition**

(1) DTC detection condition
Starter switch ON.
DEF reverting valve is activated.

(2) Judgement criteria
DEF reverting valve voltage: > 2.7 V, and < 5 V for 2.0 sec.

**3. Reset condition**

- After having restored to the normal conditions.

**4. Indication, warning or system control regulation when the DTC is set.**

- MIL: ON
- SCR malfunction light: ON
- Output restriction is applied when malfunction does not improve within 500 miles.
- Vehicle speed restriction is applied when malfunction does not improve within 2,000 miles.

**5. Symptoms on the vehicle when the DTC is set**

**<Symptoms on the vehicle due to backup control (fail safe function)>**

- Engine output is insufficient (when malfunction does not improve within 500 miles).
- Vehicle does not speed up (when malfunction does not improve within 2,000 miles).

**<Symptoms on the vehicle due to malfunction>**

- –

**6. Pre-inspection work**

- Check if the battery voltage is in the normal range.

**7. After-inspection work**

- Clear all past DTCs.
- Reset "Urea SCR related memory".
- Check if no DTC is stored after test drive.

**8. Estimated failure factors**

- Disconnection or short-circuit in sensor harness
- Irregular contact (disconnection or poor fit of connector)
- Malfunction of DEF reverting valve

## INSPECTION PROCEDURE: P20A0

| 1 | Inspect the DEF pump (reverting valve) connector |
|---|---|

1. Check the connection of the DEF pump (reverting valve) connector (Looseness and poor contact).

**Was any failure found?**

**YES**

**Connect securely, repair if needed.**
**Perform "After-inspection work" of INFORMATION section.**

**NO**

**Go to step 2.**

| 2 | Inspect the DEF pump (reverting valve) unit |
|---|---|

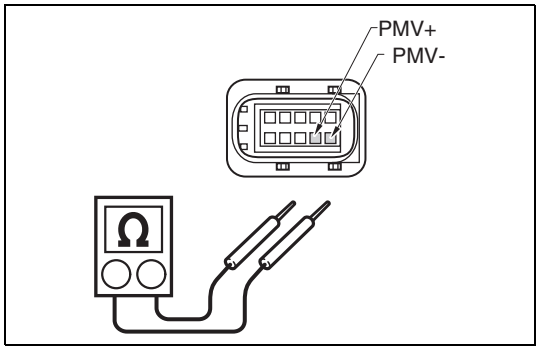

SAPH16F020400162

1. Set the starter switch to the "LOCK" position.
2. Disconnect the DEF pump connector.
3. Use the electrical tester to measure the resistance between the terminals of the DEF pump (reverting valve).

| Measurement conditions | Tester connections | Standard values |
|---|---|---|
| Starter switch: LOCK | DEF pump (reverting valve) connector<br>PMV+ – PMV- | 23 °C {73.4 °F}:<br>2.05 – 12.05 Ω |

**Do the measurements meet the standard value?**

**YES**

**Go to step 3.**

**NO**

**Replace the DEF pump.**
**Perform "After-inspection work" of INFORMATION section.**

| 3 | Inspect for short-circuit in the DEF pump (reverting valve) harness |
|---|---|

1. Disconnect the DCU 86P connector.
2. Use the electrical tester to measure the resistance between the terminals of the DCU 86P vehicle-side connector and the ground.

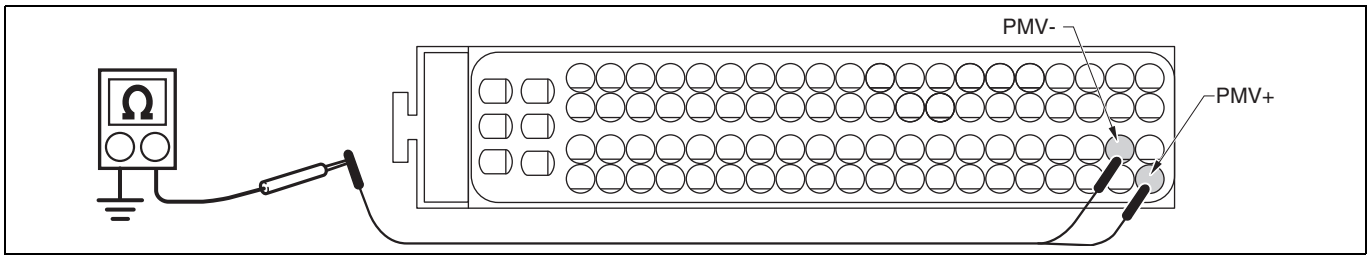


SAPH16F020400163

| Measurement conditions | Tester connections | Standard values |
|---|---|---|
| Starter switch: LOCK | DCU 86P vehicle-side connector<br>PMV+ – Ground<br>PMV- – Ground | ∞ Ω |

**Do the measurements meet the standard value?**

**YES**

**Go to step 4.**

**NO**

**Repair or replace the harness.**
**Perform "After-inspection work" of INFORMATION section.**

| 4 | Inspect disconnection of the DEF pump (reverting valve) harness |
|---|---|

1. Connect the DEF pump connector.
2. Connect the signal check harness and use the electrical tester to measure the resistance between the terminals of the DCU 86P vehicle-side connector.

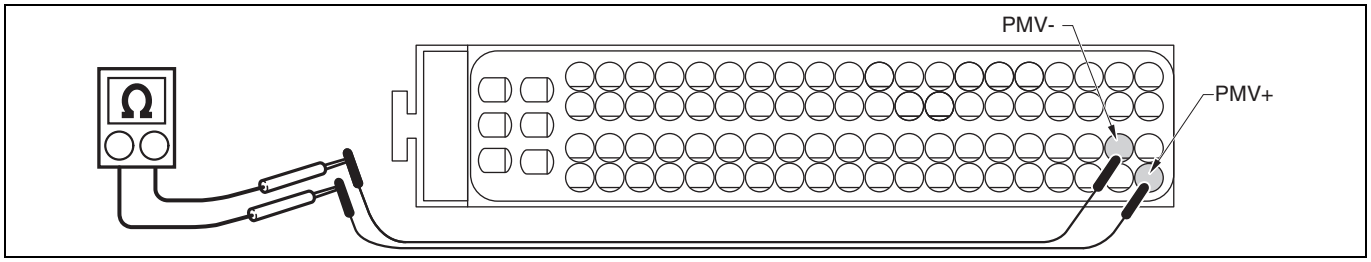


SAPH16F020400164

| Measurement conditions | Tester connections | Standard values |
|---|---|---|
| Starter switch: LOCK | DCU 86P vehicle-side connector PMV+ – PMV- | 23 °C {73.4 °F}: 2.05 – 12.05 Ω |

**Do the measurements meet the standard value?**

**YES**

**Go to step 5.**

**NO**

**Repair or replace the harness.**
**Perform "After-inspection work" of INFORMATION section.**

| 5 | Check the DTC detected (DCU) [HINO DX ll ] |
|---|---|

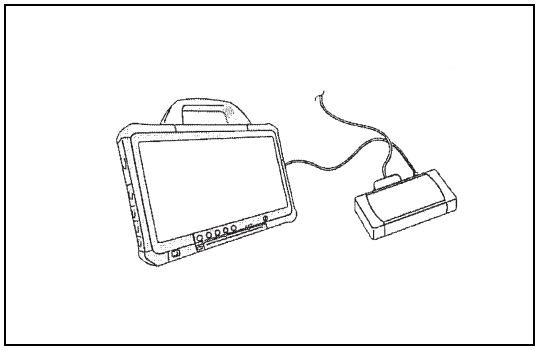

SAPH16F020400165

1. Connect the vehicle to HINO DX II .
2. Set the starter switch to the "ON" position.
3. Select [DCU] and check if P20A0 has been detected.

**Has DTC P20A0 been detected?**

**YES**

**Replace the DCU. (Perform a DPR forced regeneration after replacement.)**
**Perform "After-inspection work" of INFORMATION section.**

**NO**

**Procedure completed.**
**Perform "After-inspection work" of INFORMATION section.**

# DTC: P20A1

EN01H16F02040F03001049

## DTC: P20A1 Reverting valve for DEF pump stuck close

INFORMATION

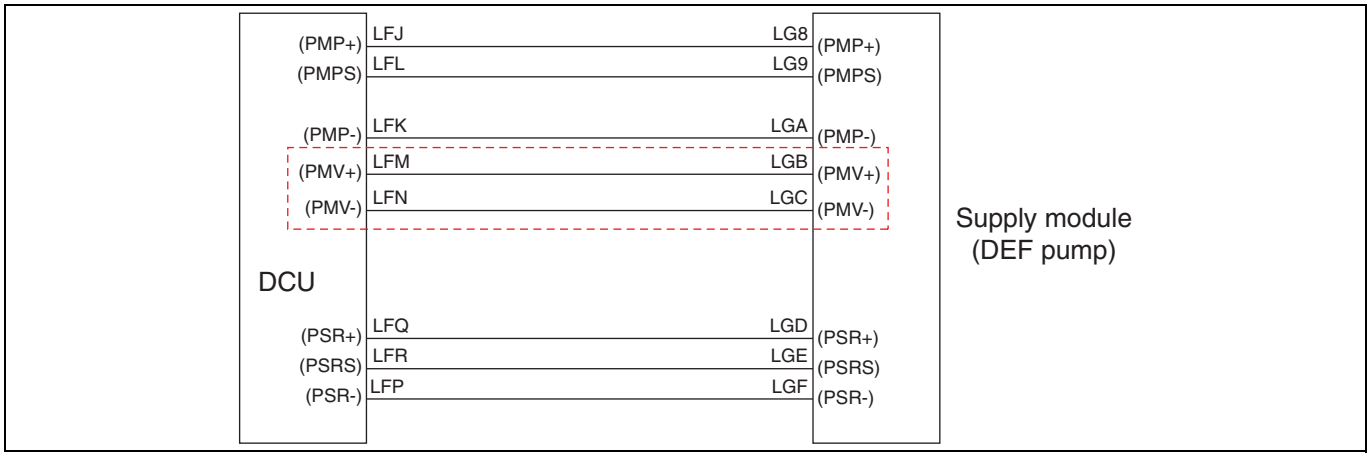


SAPH16F020400166

**1. Technical description**

- Reverting valve for DEF pump stuck close is checked by DEF pressure.

**<Description of malfunction>**

- Failure of reverting valve inside DEF pump is detected.

**2. DTC set condition**

(1) DTC detection condition
Battery voltage is in the range of 10V to 16V.
800 kPa {116 psi} < DEF pressure < 1,050 kPa {152 psi}.

(2) Judgement criteria
The pressure sensor indicates 50 kPa {7.3 psi} or higher 25 seconds after the starter switch is turned OFF.

**3. Reset condition**

- DEF pump pressure sensor drop to 50 kPa {7.3 psi} is detected within 25 seconds after starter switch is turned OFF.

**4. Indication, warning or system control regulation when the DTC is set.**

- MIL: ON
- DEF injector and DEF pipe may rupture when DEF freezes.

**5. Symptoms on the vehicle when the DTC is set**

**<Symptoms on the vehicle due to backup control (fail safe function)>**

- –

**<Symptoms on the vehicle due to malfunction>**

- –

**6. Pre-inspection work**

- Check if the battery voltage is in the normal range.

**7. After-inspection work**

- Clear all past DTCs.
- Check if no DTC is stored after test drive.

**8. Estimated failure factors**

- Malfunction of reverting valve for DEF pump

## INSPECTION PROCEDURE: P20A1

| 1 | Check the operation of the DEF pump (reverting valve) [HINO DX II ] |
|---|---|

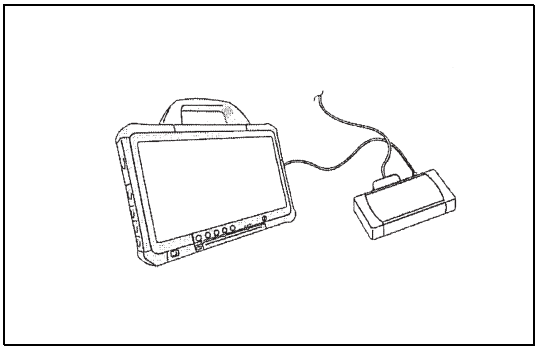

SAPH16F020400167

1. Set the starter switch to the "LOCK" position.
2. Connect the vehicle to HINO DX II .
3. Set the starter switch to the "ON" position.
4. Select [DCU] from the menu.
5. Select [DEF pump reverting valve] from [Active test Setting] in the [Data monitor and Active test] menu and check the operating sound of the reverting valve.

**Did you hear the operating sound?**

**YES**

**Go to step 2.**

**NO**

**Replace DEF pump.**
**Perform "After-inspection work" of INFORMATION section.**

| 2 | Inspect the DEF pump (reverting valve) [HINO DX II ] |
|---|---|

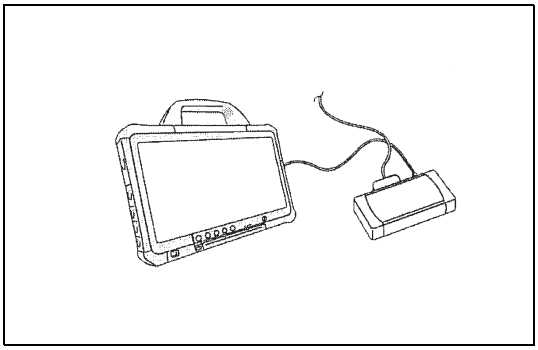

SAPH16F020400168

1. Select [DEF pump position] from the [Active test Setting] menu and operate the DEF pump.
2. Select [DEF pump pressure] from the [Data monitor Setting] menu and check the DEF pressure.

| Standard values |
|---|
| DEF pressure: less than 50 kPa {7.3 psi} |

**Do the measurements meet the standard value?**

**YES**

**Go to step 3.**

**NO**

**Replace the DEF pump.**
**Perform "After-inspection work" of INFORMATION section.**

| 3 | Inspect the DEF tank |
|---|---|

1. Disconnect the breather hose and check if it is not clogged, punctured, or cracked.

**Was any failure found?**

**YES**

**Replace the breather hose.**
**Perform "After-inspection work" of INFORMATION section.**

**NO**

**Go to step 4.**

| 4 | Check the DTC detected (DCU) [HINO DX II ] |
|---|---|

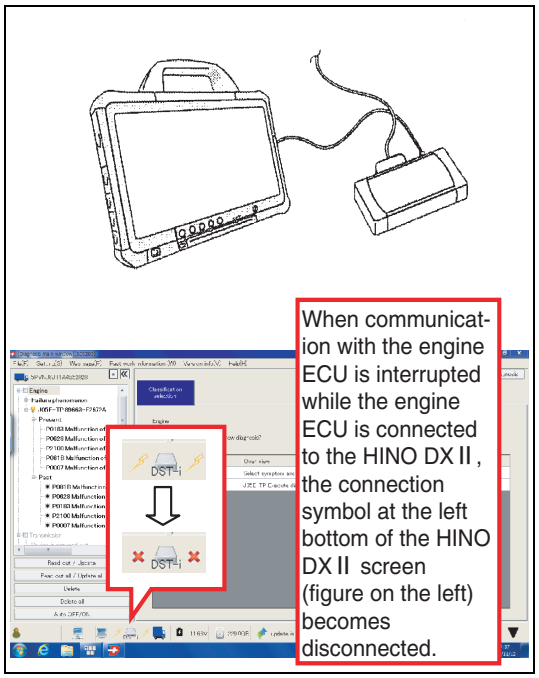


SAPH16F020400169

1. Start the engine and idle it for 10 minutes while you check if the DEF pressure is maintained around 900 kPa {131 psi} in [Data monitor Setting] (800 kPa – 1,050 kPa) {(116 psi – 152 psi)}.
2. Set the starter switch to the "LOCK" position.
3. Check if the DCU main relay is OFF in the HINO DX II menu. (This cuts off the communication between HINO DX II and the DCU.)
4. Select [DCU] and check if P20A1 is detected.

**Has DTC P20A1 been detected?**

**YES**

**Replace the DCU.**
**Perform "After-inspection work" of INFORMATION section.**

**NO**

**Procedure completed.**
**Perform "After-inspection work" of INFORMATION section.**

# DTC: P20A2

EN01H16F02040F03001050

## DTC: P20A2 Reverting valve for DEF pump - circuit (Circuit low)

INFORMATION

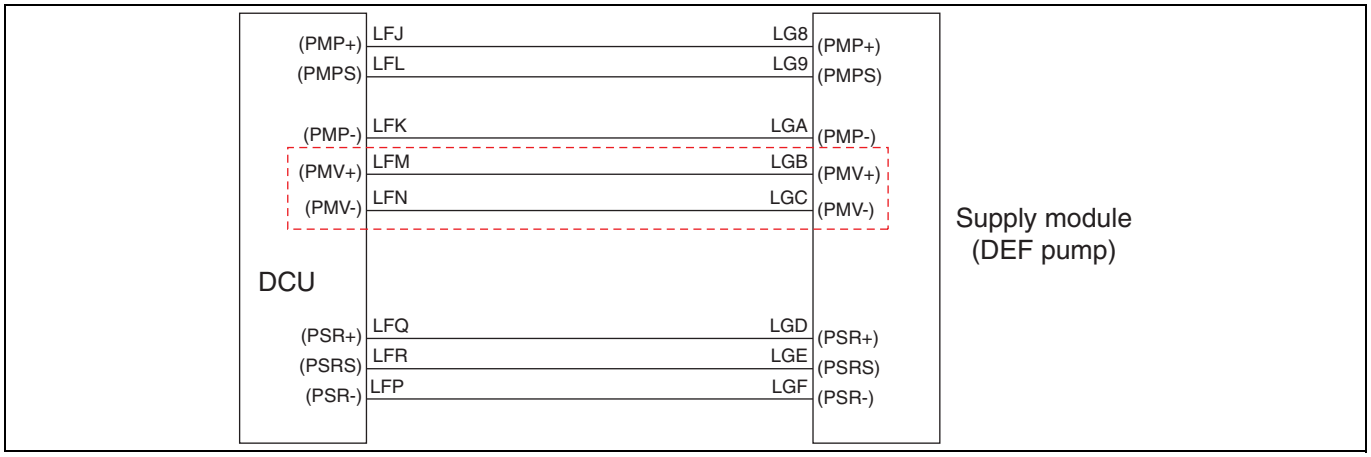


SAPH16F020400170

**1. Technical description**

- DCU detects the circuit failure based on the circuit voltage of the DEF pump reverting valve.

**<Description of malfunction>**

- Failure of reverting valve in DEF pump is detected.

**2. DTC set condition**

(1) DTC detection condition
Starter switch ON.
DEF reverting valve is activated.

(2) Judgement criteria
DEF reverting valve voltage: < 0.66 V for 2 sec.

**3. Reset condition**

- After having restored to the normal conditions.

**4. Indication, warning or system control regulation when the DTC is set.**

- MIL: ON
- DEF injection is stopped.
- NOx reduction quantity monitoring is aborted.

**5. Symptoms on the vehicle when the DTC is set**

**<Symptoms on the vehicle due to backup control (fail safe function)>**

- NOx reduction function is prevented.

**<Symptoms on the vehicle due to malfunction>**

- –

**6. Pre-inspection work**

- Check if the battery voltage is in the normal range.

**7. After-inspection work**

- Clear all past DTCs.
- Check if no DTC is stored after test drive.

**8. Estimated failure factors**

- Disconnection or short-circuit in sensor harness
- Irregular contact (disconnection or poor fit of connector)
- Malfunction of DEF reverting valve

## INSPECTION PROCEDURE: P20A2

| 1 | Inspect the DEF pump (reverting valve) connector |
|---|---|

1. Check the connection of the DEF pump connector (Looseness and poor contact).

**Was any failure found?**

**YES**

**Connect securely, repair if needed.**
**Perform "After-inspection work" of INFORMATION section.**

**NO**

**Go to step 2.**

| 2 | Inspect the DEF pump (reverting valve) unit |
|---|---|

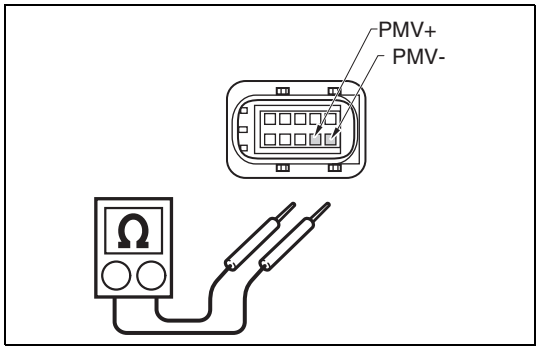

SAPH16F020400171

1. Set the starter switch to the "LOCK" position.
2. Disconnect the DEF pump connector.
3. Use the electrical tester to measure the resistance between the terminals of the DEF pump (reverting valve).

| Measurement conditions | Tester connections | Standard values |
|---|---|---|
| Starter switch: LOCK | DEF pump (Reverting valve) connector PMV+ – PMV- | 23 °C {73.4 °F}: 2.05 – 12.05 Ω |

**Do the measurements meet the standard value?**

**YES**

**Go to step 3.**

**NO**

**Replace the DEF pump.**
**Perform "After-inspection work" of INFORMATION section.**

| 3 | Inspect for short-circuit in the DEF pump (reverting valve) harness |
|---|---|

1. Disconnect the DCU 86P connector.
2. Use the electrical tester to measure the resistance between the terminals of the DCU 86P vehicle-side connector and the ground.

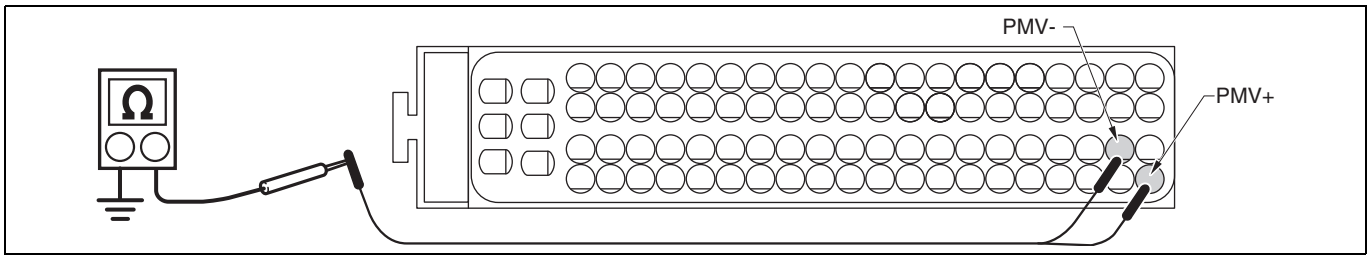


SAPH16F020400172

| Measurement conditions | Tester connections | Standard values |
|---|---|---|
| Starter switch: LOCK | DCU 86P vehicle-side connector<br>PMV+ – Ground<br>PMV- – Ground | ∞ Ω |

**Do the measurements meet the standard value?**

**YES**

**Go to step 4.**

**NO**

**Repair or replace the harness.**
**Perform "After-inspection work" of INFORMATION section.**

| 4 | Inspect disconnection of the DEF pump (reverting valve) harness |
|---|---|

1. Connect the DEF pump connector.
2. Connect the signal check harness and use the electrical tester to measure the resistance between the terminals of the DCU 86P vehicle-side connector.

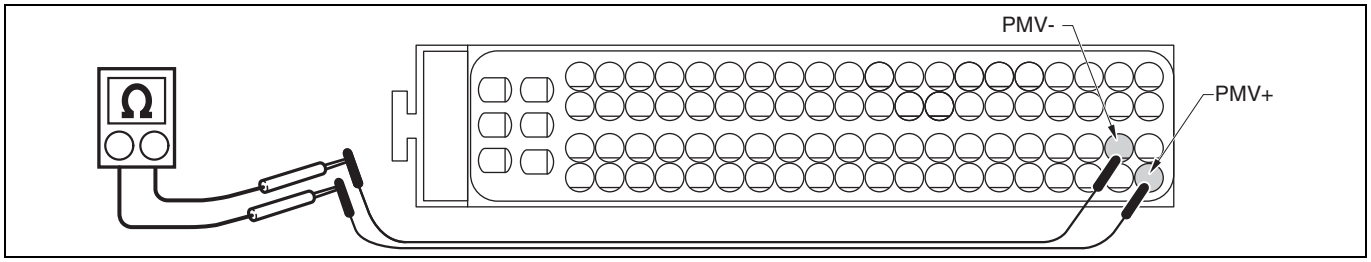


SAPH16F020400173

| Measurement conditions | Tester connections | Standard values |
|---|---|---|
| Starter switch: LOCK | DCU 86P vehicle-side connector PMV+ – PMV- | 23 °C {73.4 °F}: 2.05 – 12.05 Ω |

**Do the measurements meet the standard value?**

**YES**

**Go to step 5.**

**NO**

**Repair or replace the harness.**
**Perform "After-inspection work" of INFORMATION section.**

| 5 | Check the DTC detected (DCU) |
|---|---|

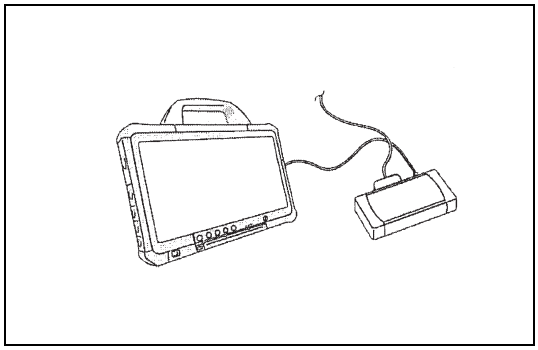

SAPH16F020400174

1. Connect the vehicle to HINO DX II .
2. Set the starter switch to the "ON" position.
3. Select [DCU] and check if P20A2 has been detected.

**Has DTC P20A2 been detected?**

**YES**

**Replace the DCU. (Perform a DPR forced regeneration after replacement.)**
**Perform "After-inspection work" of INFORMATION section.**

**NO**

**Procedure completed.**
**Perform "After-inspection work" of INFORMATION section.**

# DTC: P20A3

EN01H16F02040F03001051

## DTC: P20A3 Reverting valve for DEF pump - circuit (Circuit high)

INFORMATION

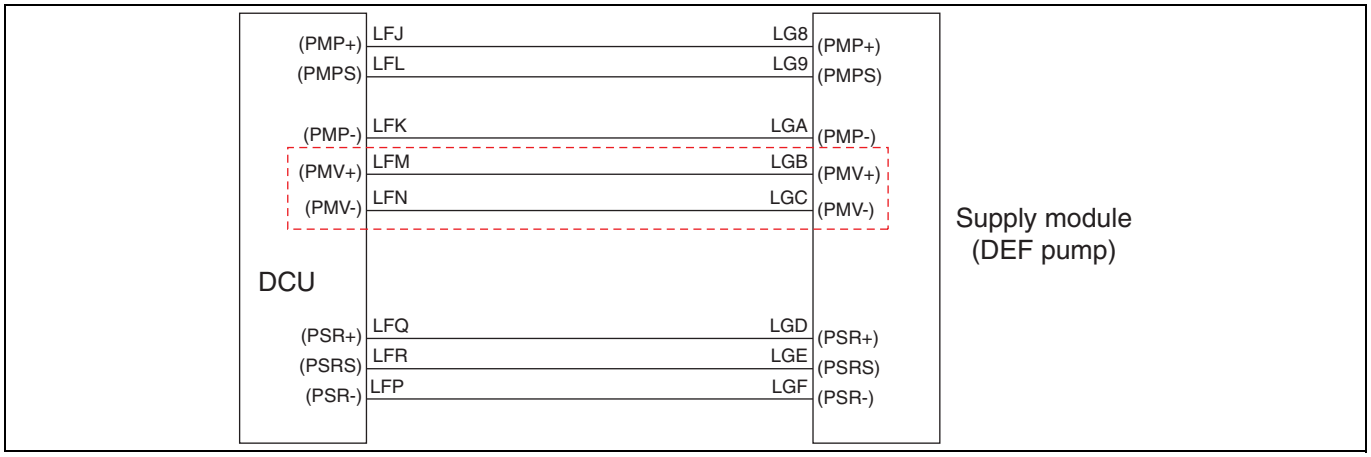


SAPH16F020400175

**1. Technical description**

- DCU detects the circuit failure based on the circuit voltage of the DEF pump reverting valve.

**<Description of malfunction>**

- Failure of reverting valve in DEF pump is detected.

**2. DTC set condition**

(1) DTC detection condition
Starter switch ON.
DEF reverting valve is activated.

(2) Judgement criteria
DEF reverting valve voltage: ≤ 2.7 V for 2 sec.

**3. Reset condition**

- After having restored to the normal conditions.

**4. Indication, warning or system control regulation when the DTC is set.**

- MIL: ON
- DEF injector and DEF pipe may rupture when DEF freezes.

**5. Symptoms on the vehicle when the DTC is set**

**<Symptoms on the vehicle due to backup control (fail safe function)>**

- –

**<Symptoms on the vehicle due to malfunction>**

- –

**6. Pre-inspection work**

- Check if the battery voltage is in the normal range.

**7. After-inspection work**

- Clear all past DTCs.
- Check if no DTC is stored after test drive.

**8. Estimated failure factors**

- Disconnection or short-circuit in sensor harness
- Irregular contact (disconnection or poor fit of connector)
- Malfunction of DEF reverting valve

## INSPECTION PROCEDURE: P20A3

| 1 | Inspect the DEF pump (reverting valve) connector |
|---|---|

1. Check the connection of the DEF pump connector (Looseness and poor contact).

**Was any failure found?**

**YES**

**Connect securely, repair if needed.**
**Perform "After-inspection work" of INFORMATION section.**

**NO**

**Go to step 2.**

| 2 | Inspect the DEF pump (reverting valve) unit |
|---|---|

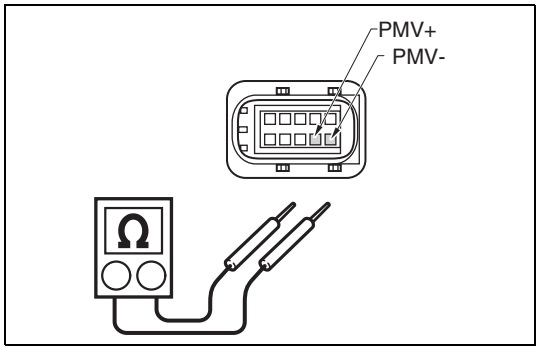

SAPH16F020400176

1. Set the starter switch to the "LOCK" position.
2. Disconnect the DEF pump connector.
3. Use the electrical tester to measure the resistance between the terminals of the DEF pump (reverting valve).

| Measurement conditions | Tester connections | Standard values |
|---|---|---|
| Starter switch: LOCK | DEF pump (Reverting valve) connector PMV+ – PMV- | 23 °C {73.4 °F}: 2.05 – 12.05 Ω |

**Do the measurements meet the standard value?**

**YES**

**Go to step 3.**

**NO**

**Replace the DEF pump.**
**Perform "After-inspection work" of INFORMATION section.**

| 3 | Inspect for short-circuit in the DEF pump (reverting valve) harness |
|---|---|

1. Disconnect the DCU 86P connector.
2. Connect the signal check harness and use the electrical tester to measure the resistance between the terminals of the DCU 86P vehicle-side connector and the ground.

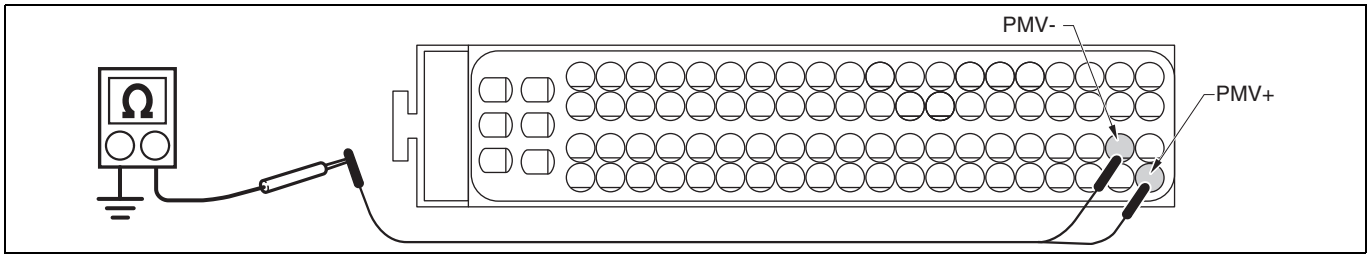


SAPH16F020400177

| Measurement conditions | Tester connections | Standard values |
|---|---|---|
| Starter switch: LOCK | DCU 86P vehicle-side connector<br>PMV+ – Ground<br>PMV- – Ground | ∞ Ω |

**Do the measurements meet the standard value?**

**YES**

**Go to step 4.**

**NO**

**Repair or replace the harness.**
**Perform "After-inspection work" of INFORMATION section.**

| 4 | Inspect disconnection of the DEF pump (reverting valve) harness |
|---|---|

1. Connect the DEF pump connector.
2. Connect the signal check harness and use the electrical tester to measure the resistance between the terminals of the DCU 86P vehicle-side connector.

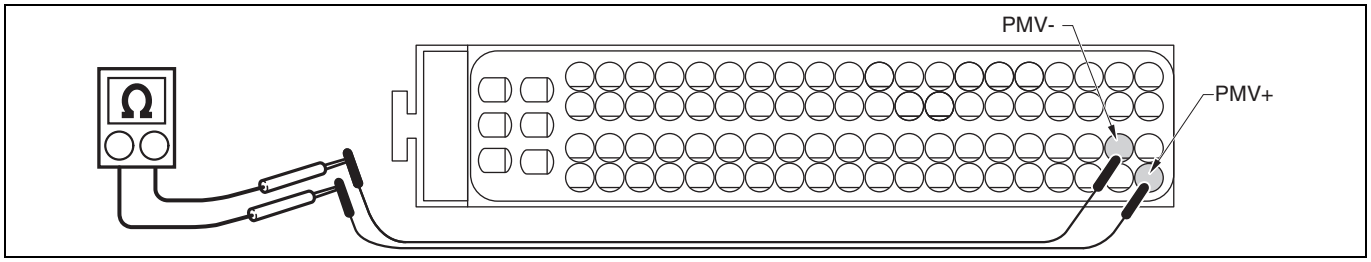


SAPH16F020400178

| Measurement conditions | Tester connections | Standard values |
|---|---|---|
| Starter switch: LOCK | DCU 86P vehicle-side connector PMV+ – PMV- | 23 °C {73.4 °F}: 2.05 – 12.05 Ω |

**Do the measurements meet the standard value?**

**YES**

**Go to step 5.**

**NO**

**Repair or replace the harness.**
**Perform "After-inspection work" of INFORMATION section.**

| 5 | Check the DTC detected [DCU] |
|---|---|

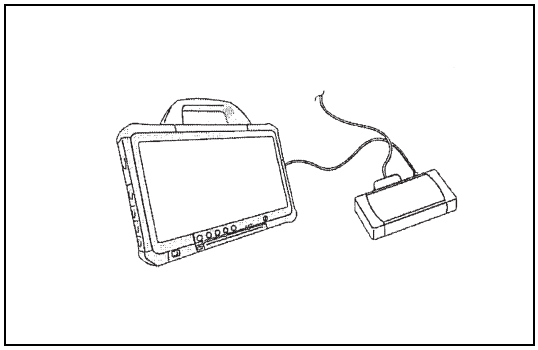

SAPH16F020400179

1. Connect the vehicle to HINO DX II .
2. Set the starter switch to the "ON" position.
3. Select [DCU] and check if P20A3 has been detected.

**Has DTC P20A3 been detected?**

**YES**

**Replace the DCU. (Perform a DPR forced regeneration after replacement.)**
**Perform "After-inspection work" of INFORMATION section.**

**NO**

**Procedure completed.**
**Perform "After-inspection work" of INFORMATION section.**

# DTC: P20B1

EN01H16F02040F03001052

## DTC: P20B1 Coolant cut off valve - circuit (Open load)

INFORMATION

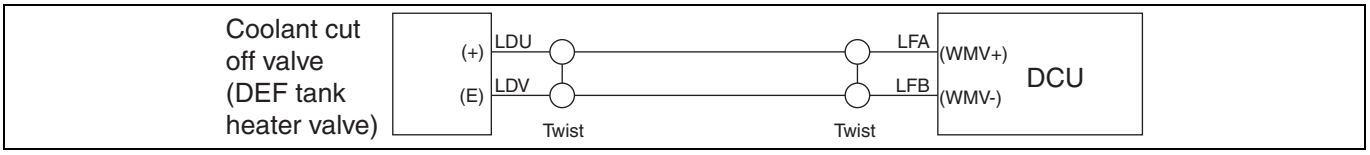


SAPH16F020400180

**1. Technical description**

- DCU detects malfunctions based on the coolant cut off valve (DEF tank heater valve) circuit voltage.

**<Description of malfunction>**

- Malfunction of coolant cut off valve (DEF tank heater valve) is detected.

**2. DTC set condition**

(1) DTC detection condition
Starter switch ON.
Coolant cut off valve (DEF tank heater valve) duty > 0%

(2) Judgement criteria
Coolant cut off valve (DEF tank heater valve) voltage is more than 2.7 V and less than 5 V for 0.5 sec.

**3. Reset condition**

- After having restored to the normal conditions.

**4. Indication, warning or system control regulation when the DTC is set.**

- MIL: ON
- SCR malfunction light: ON
- If malfunction does not improve within 500 miles: engine output is restricted.
- If malfunction does not improve within 2,000 miles: vehicle speed is restricted.

**5. Symptoms on the vehicle when the DTC is set**

**<Symptoms on the vehicle due to backup control (fail safe function)>**

- Engine output is insufficient (when malfunction does not improve within 500 miles).
- Vehicle does not speed up (when malfunction does not improve within 2,000 miles).

**<Symptoms on the vehicle due to malfunction>**

- –

**6. Pre-inspection work**

- Check if the battery voltage is in the normal range.

**7. After-inspection work**

- Clear all past DTCs.
- Reset "Urea SCR related memory".
- Check if no DTC is stored after test drive.

**8. Estimated failure factors**

- Harness disconnection or short-circuit
- Looseness or unsteady contact of connectors
- Coolant cut off valve (DEF tank heater valve) malfunction

## INSPECTION PROCEDURE: P20B1

| 1 | Inspect the coolant cut off valve (DEF tank heater valve) connector |
|---|---|

1. Check the connection of the coolant cut off valve (DEF tank heater valve) connector (Looseness and poor contact).

**Was any failure found?**

**YES**

**Connect securely, repair if needed.**
**Perform "After-inspection work" of INFORMATION section.**

**NO**

**Go to step 2.**

| 2 | Check the coolant cut off valve (DEF tank heater valve) unit |
|---|---|

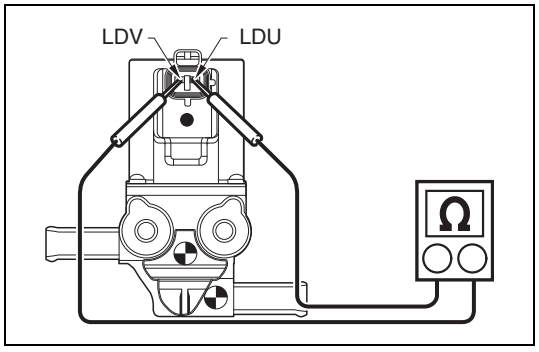

SAPH16F020400181

1. Set the starter switch to the "LOCK" position.
2. Disconnect the connector of the coolant cut off valve (DEF tank heater valve).
3. Use the electrical tester to measure the resistance between the terminals of the coolant cut off valve (DEF tank heater valve).

| Measurement conditions | Tester connections | Standard values |
|---|---|---|
| Starter switch: LOCK | Coolant cut off valve (DEF tank heater valve) connector LDU – LDV | 20 °C {68 °F}: 9.04 – 9.52 Ω |

**Do the measurements meet the standard value?**

**YES**

**Go to step 3.**

**NO**

**Replace the coolant cut off valve (DEF tank heater valve).**
**Perform "After-inspection work" of INFORMATION section.**

| 3 | Check for short-circuit in the coolant cut off valve (DEF tank heater valve) wire harness |
|---|---|

1. Disconnect the DCU 86P connector.
2. Connect the signal check harness and use the electrical tester to measure the resistance between the ground and each terminal of the DCU 86P vehicle-side connector.

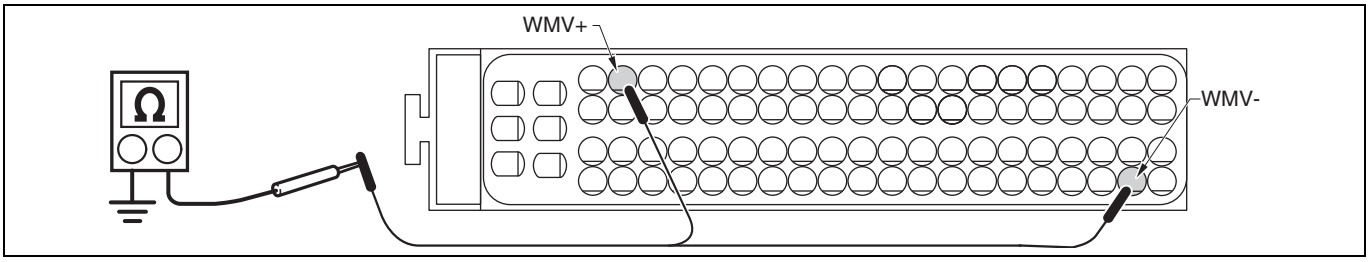


SAPH16F020400182

| Measurement conditions | Tester connections | Standard values |
|---|---|---|
| Starter switch: LOCK | DCU 86P vehicle-side connector<br>WMV+ – Ground<br>WMV- – Ground | ∞ Ω |

**Do the measurements meet the standard value?**

**YES**

**Go to step 4.**

**NO**

**Repair or replace the harness.**
**Perform "After-inspection work" of INFORMATION section.**

| 4 | Check for disconnection in the coolant cut off valve (DEF tank heater valve) wire harness |
|---|---|

1. Connect the coolant cut off valve (DEF tank heater valve) connector.
2. Connect the signal check harness and use the electrical tester to measure the resistance between the terminals of the DCU 86P vehicle-side connector.

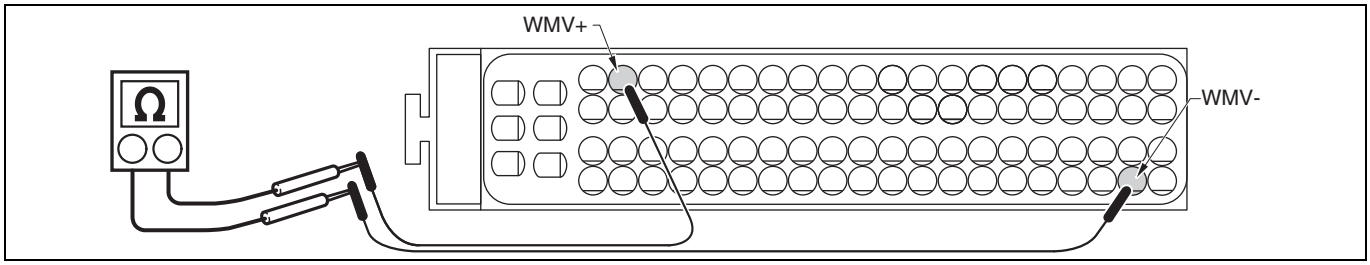


SAPH16F020400183

| Measurement conditions | Tester connections | Standard values |
|---|---|---|
| Starter switch: LOCK | DCU 86P vehicle-side connector WMV+ – WMV- | 20 °C {68 °F}: 9.04 – 9.52 Ω |

**Do the measurements meet the standard value?**

**YES**

**Go to step 5.**

**NO**

**Repair or replace the harness.**
**Perform "After-inspection work" of INFORMATION section.**

| 5 | Check the DTC detected (DCU) [HINO DX II ] |
|---|---|

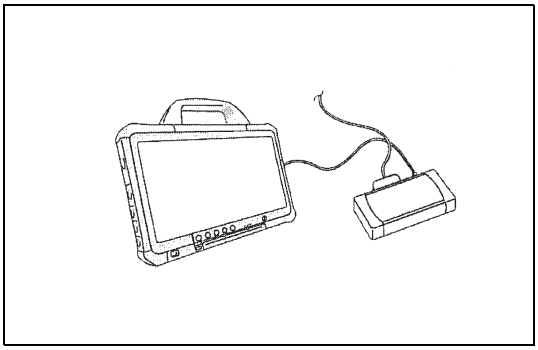

SAPH16F020400184

1. Connect the vehicle to HINO DX II .
2. Set the starter switch to the "ON" position.
3. Select [Engine] and check if P20B1 has been detected.

**Has DTC P20B1 been detected?**

**YES**

**Replace the DCU. (After replacing the DCU, perform a DPR forced regeneration.)**
**Perform "After-inspection work" of INFORMATION section.**

**NO**

**Procedure completed.**
**Perform "After-inspection work" of INFORMATION section.**

# DTC: P20B2

EN01H16F02040F03001053

## DTC: P20B2 Coolant cut off valve stuck

INFORMATION

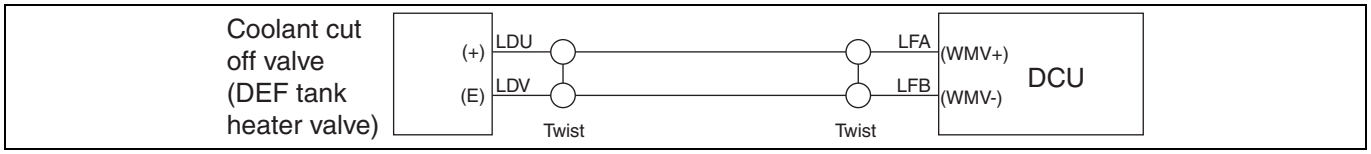


SAPH16F020400185

**1. Technical description**

- Coolant cut off valve (DEF tank heater valve) malfunction is judged by using the value of DEF tank temperature sensor.
- There are 2 types of coolant cut off valve (DEF tank heater valve) malfunction: "stuck open" and "stuck closed".

**<Description of malfunction>**

- Malfunction of coolant cut off valve (DEF tank heater valve) is detected.

**2. DTC set condition**

(1) DTC detection condition
When stuck in open position
1. Starter switch ON.
When stuck in closed position
2. Coolant cut off valve (DEF tank heater valve) open (DEF defrosts)
Coolant temperature is more than 40 °C {104 °F}.

(2) Judgement criteria
When stuck in open position
1. DEF tank temperature is more than 75 °C {167 °F} for 10 seconds (Judged by whether the DEF tank is abnormally heated.)
When stuck in closed position
2. Rise in the DEF tank temperature after 1,000 to 1,200 seconds in condition 2. above: Within 1 °C {33.8 °F} (Judged by the fact that the temperature does not rise even when the DEF tank is heated.)

**3. Reset condition**

- When stuck in open position
After having restored to the normal conditions.
- When stuck in closed position
Temperature rises at least 1°C {33.8 °F} 1,000 to 1,200 seconds after valve opens (defrosts).

**4. Indication, warning or system control regulation when the DTC is set.**

- MIL: ON
- DEF injection is stopped.
- NOx reduction quantity monitoring is aborted.

**5. Symptoms on the vehicle when the DTC is set**

**<Symptoms on the vehicle due to backup control (fail safe function)>**

- NOx reduction function is prevented.

**<Symptoms on the vehicle due to malfunction>**

- –

**6. Pre-inspection work**

- If DTC P20B1 is detected simultaneously, start DTC P20B1 inspection first.
- Check if the battery voltage is in the normal range.

**7. After-inspection work**

- Clear all past DTCs.
- Check if no DTC is stored after test drive.

**8. Estimated failure factors**

- Coolant cut off valve (DEF tank heater valve) closed stuck or open stuck
- Blockage or leakage of coolant pipes
- Harness disconnection or short-circuit
- Looseness or unsteady contact of connector
- DEF tank temperature sensor malfunction
- Engine coolant temperature sensor malfunction

**NOTICE**

**1. If the heat source is brought close to the DEF tank or the heated DEF is supplied, P20B2 may be detected.**

**2. "Stuck closed" will be detected only at low temperatures where defrosting of DEF is necessary.**

## INSPECTION PROCEDURE: P20B2

| 1 | Check the DTC detected (DCU) [HINO DX II ] |
|---|---|

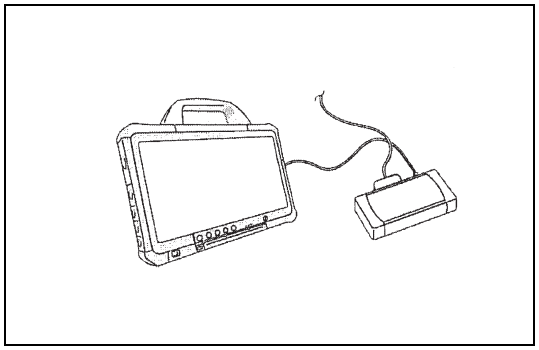

SAPH16F020400186

1. Set the starter switch to the "LOCK" position.
2. Connect the vehicle to HINO DX II .
3. Set the starter switch to the "ON" position.
4. Select [DCU] and check if any DTC other than P20B2 (for example, P20B1, U02A2) has been detected.

**Has a DTC other than P20B2 been detected?**

**YES**

**Go to diagnosis procedure of a related DTC.**

**NO**

**Go to step 2.**

| 2 | Inspect the DEF tank temperature sensor connector |
|---|---|

1. Check if the connection of the DEF tank temperature sensor connector (Looseness or poor contact).

**Was any failure found?**

**YES**

**Connect securely, repair if needed.**
**Perform "After-inspection work" of INFORMATION section.**

**NO**

**Go to step 3.**

| 3 | Inspect the engine coolant system (pipes or hoses) |
|---|---|

1. Check for leakage of the engine coolant system (pipes or hoses).
2. Check for uncoupled, clogged, broken, or cracked parts in the engine cooling system (pipes and hoses).

**Was any failure found?**

**YES**

**Repair or replace the faulty part.**
**Perform "After-inspection work" of INFORMATION section.**

**NO**

**Go to step 4.**

| 4 | Inspect the engine coolant temperature sensor connector |
|---|---|

1. Check the connection of the engine coolant sensor connector (Looseness or poor contact).

**Was any failure found?**

**YES**

**Connect securely. Repair if needed.**
**Perform "After-inspection work" of INFORMATION section.**

**NO**

**Go to step 5.**

| 5 | Inspect the engine coolant temperature sensor |
|---|---|

1. Check the installation of the engine coolant temperature sensor.
2. Make sure there is no dirt or damage to the engine coolant temperature sensor.

**Was any failure found?**

**YES**

**Clean the engine coolant temperature sensor and install it properly. If damaged, replace the engine coolant temperature sensor.**
**Perform "After-inspection work" of INFORMATION section.**

**NO**

**Go to step 6.**

| 6 | Inspect the engine coolant temperature sensor unit |
|---|---|

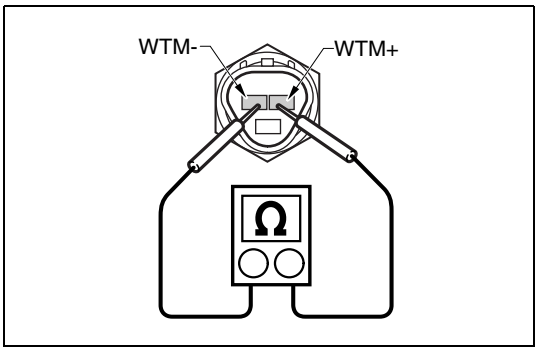


SAPH16F020400187

1. Disconnect the engine coolant temperature sensor connector.
2. Use the electrical tester to measure the resistance between the terminals of the engine coolant temperature sensor.

| Measurement conditions | Tester connections | Standard values |
|---|---|---|
| Starter switch: LOCK | Engine coolant temperature sensor WTM + – WTM- | 20 °C {68 °F}: 2.32 – 2.59 kΩ<br>80 °C {176°F}: 0.310 – 0.326 kΩ |

**Do the measurements meet the standard value?**

YES

**Go to step 7.**

NO

**Replace the engine coolant temperature sensor.**
**Perform "After-inspection work" of INFORMATION section.**

| 7 | **Inspect the coolant cut off valve (DEF tank heater valve) connector** |
|---|---|

1. Check the connection of the coolant cut off valve (DEF tank heater valve) connector.

**Was any failure found?**

YES

**Connect securely. Repair if needed.**
**Perform "After-inspection work" of INFORMATION section.**

NO

**Go to step 8.**

| 8 | **Coolant cut off valve (DEF tank heater valve) actuation test [HINO DX II ]** |
|---|---|

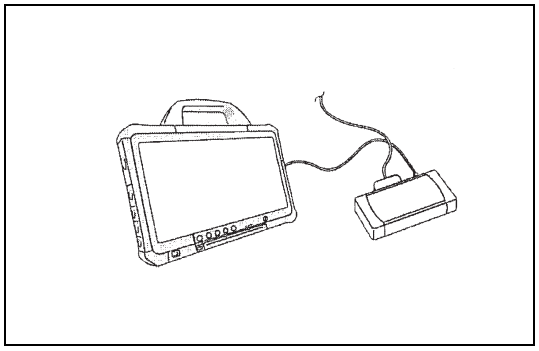

SAPH16F020400188

1. Set the starter switch to the "ON" position.
2. Select [DCU] from the menu.
3. Select [Coolant shutoff valve] from the [Active test Setting] menu and check the coolant cut off valve (DEF tank heater valve) operating noise.

**Operating noise is heard?**

YES

**Go to step 9.**

NO

**Replace the coolant cut off valve (DEF tank heater valve).**
**Perform "After-inspection work" of INFORMATION section.**

| 9 | Inspect the engine coolant temperature [HINO DX II ] |
|---|---|

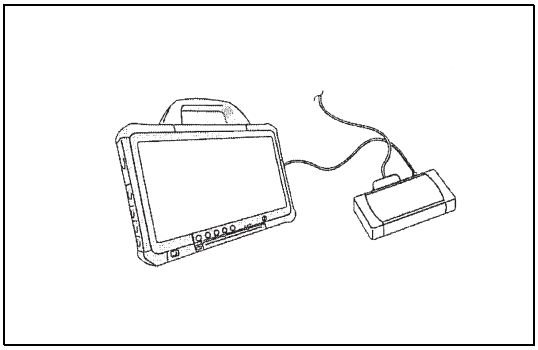

SAPH16F020400189

1. Select [DEF tank temperature] and [Engine coolant temperature] from [Data monitor Setting].
2. Start the engine.
3. Check if the DEF tank temperature rises when the coolant temperature is 40 °C {104 °F} or higher.

**Did DEF tank temperature rise?**

**YES**

**Go to step 10.**

**NO**

**Replace the coolant cut off valve (DEF tank heater valve).**
**Perform "After-inspection work" of INFORMATION section.**

| 10 | Inspect the coolant cut off valve (DEF tank heater valve) unit |
|---|---|

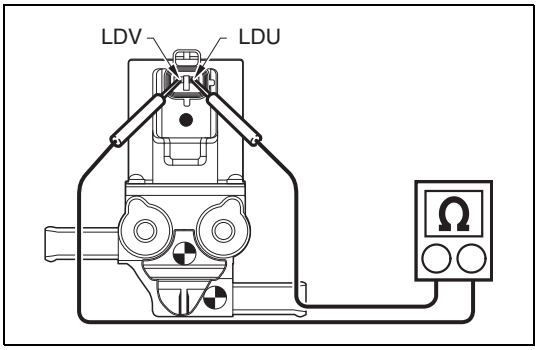


SAPH16F020400190

1. Set the starter switch to the "LOCK" position.
2. Disconnect the coolant cut off valve (DEF tank heater valve) connector.
3. Use the electrical tester to measure the resistance of the terminals of the coolant cut off valve (DEF tank heater valve).

| Measurement conditions | Tester connections | Standard values |
|---|---|---|
| **Starter switch: LOCK** | **Coolant cut off valve (DEF tank heater valve) connector LDU – LDV** | **20 °C {68 °F}: 9.04 – 9.52 Ω** |

**Do the measurements meet the standard value?**

YES

**Go to step 11.**

NO

**Replace the coolant cut off valve (DEF tank heater valve).**
**Perform "After-inspection work" of INFORMATION section.**

| 11 | Inspect the coolant cut off valve (DEF tank heater valve) |
|---|---|

1. Twenty seconds after the engine has started, grasp the pipe downstream of the coolant cut off valve (DEF tank heater valve) and check if the pressure drops.

**Did the pressure drop?**

YES

**Go to step 12.**

NO

**Replace the coolant cut off valve (DEF tank heater valve).**
**Perform "After-inspection work" of INFORMATION section.**

| 12 | Inspect the DEF sensor |
|---|---|

1. Remove the coolant hose (upstream, downstream) from DEF sensor.
2. Blow air from one side and make sure it comes out from the other side.

**Was any failure found?**

YES

**Replace the DEF sensor.**
**Perform "After-inspection work" of INFORMATION section.**

NO

**Go to step 13.**

| 13 | Inspect the DEF pump |
|---|---|

1. Remove the coolant hose (upstream, downstream) from DEF pump.
2. Blow air from one side and make sure it comes out from the other side.

**Was any failure found?**

**YES**

**Replace the DEF pump.**
**Perform "After-inspection work" of INFORMATION section.**

**NO**

**Go to step 14.**

| 14 | Replace the DEF tank temperature sensor |
|---|---|

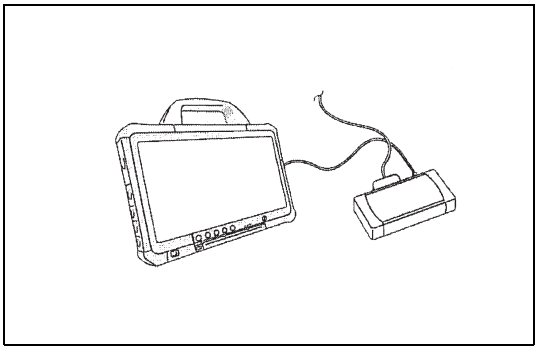

SAPH16F020400191

1. Replace the DEF tank temperature sensor.
2. Warm up the engine. (engine coolant temperature: 60 °C {140 °F} or more)
3. Stop the engine.
4. Set the starter switch to the "ON" position.
5. Select [DCU] and check if P20B2 has been detected.

**Has the DTC P20B2 been detected?**

**YES**

**Replace the DCU.**
**Perform "After-inspection work" of INFORMATION section.**

**NO**

**Procedure completed.**
**Perform "After-inspection work" of INFORMATION section.**

# DTC: P20B3

EN01H16F02040F03001054

## DTC: P20B3 Coolant cut off valve - circuit (Circuit low)

INFORMATION

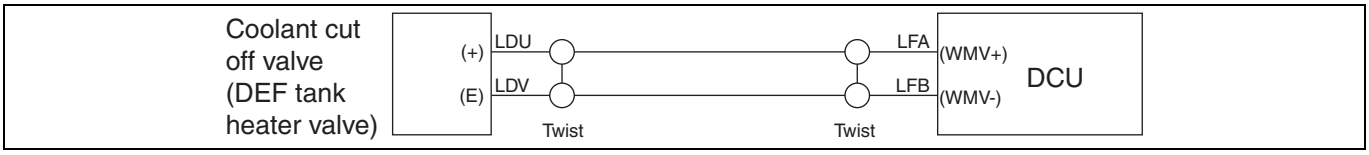


SAPH16F020400192

**1. Technical description**

- DCU detects malfunctions based on the coolant cut off valve (DEF tank heater valve) circuit voltage.

**<Description of malfunction>**

- Malfunction of coolant cut off valve is detected.

**2. DTC set condition**

(1) DTC detection condition
Starter switch ON.
Coolant cut off valve duty > 0%

(2) Judgement criteria
Coolant cut off valve voltage < 0.66 V for 0.05 sec.

**3. Reset condition**

- After having restored to the normal conditions.

**4. Indication, warning or system control regulation when the DTC is set.**

- MIL: ON

**5. Symptoms on the vehicle when the DTC is set**

**<Symptoms on the vehicle due to backup control (fail safe function)>**

- –

**<Symptoms on the vehicle due to malfunction>**

- Control will not work properly if the DEF freezes.

**6. Pre-inspection work**

- Check if the battery voltage is in the normal range.

**7. After-inspection work**

- Clear all past DTCs.
- Check if no DTC is stored after test drive.

**8. Estimated failure factors**

- Harness disconnection or short-circuit
- Looseness or unsteady contact of connector
- Coolant cut off valve malfunction

## INSPECTION PROCEDURE: P20B3

| 1 | Inspect the coolant cut off valve connector |
|---|---|

1. Check the connection of the coolant cut off valve connector (Looseness and poor contact).

**Was any failure found?**

**YES**

**Connect securely, repair if needed.**

**NO**

**Go to step 2.**

| 2 | Inspect the coolant cut off valve unit |
|---|---|

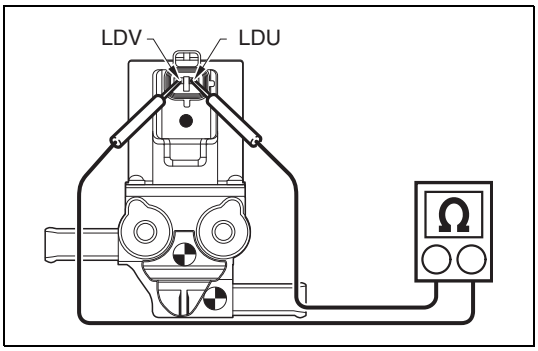

SAPH16F020400193

1. Set the starter switch to the "LOCK" position.
2. Remove the connector of the coolant cut off valve.
3. Use the electrical tester to measure the resistance between the terminals of the coolant cut off valve.

| Measurement conditions | Tester connections | Standard values |
|---|---|---|
| Starter switch: LOCK | Coolant cut off valve connector LDU – LDV | 20 °C {68 °F}: 9.04 – 9.52 Ω |

**Do the measurements meet the standard value?**

**YES**

**Go to step 3.**

**NO**

**Replace the coolant cut off valve.**
**Perform "After-inspection work" of INFORMATION section.**

| 3 | Check for short-circuit in the coolant cut off valve wire harness |
|---|---|

1. Disconnect the DCU 86P connector.
2. Connect the signal check harness and use the electrical tester to measure the resistance between the terminals of the DCU 86P vehicle-side connector and the ground.

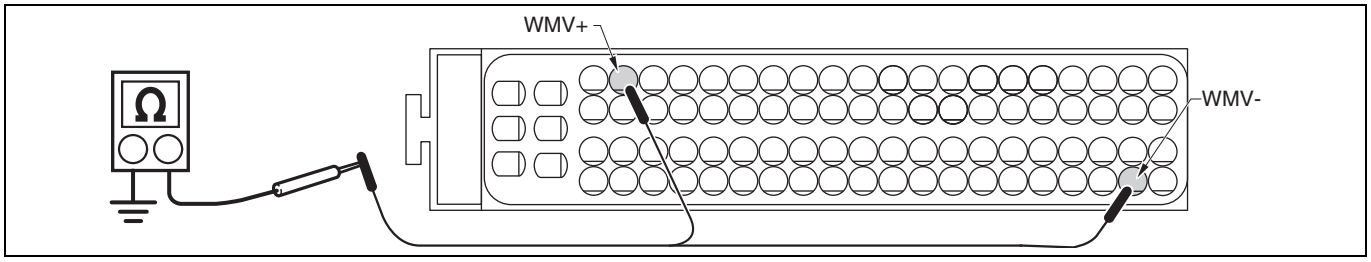


SAPH16F020400194

| Measurement conditions | Tester connections | Standard values |
|---|---|---|
| Starter switch: LOCK | DCU 86P vehicle-side connector<br>WMV+ – Ground<br>WMV- – Ground | ∞ Ω |

**Do the measurements meet the standard value?**

**YES**

**Go to step 4.**

**NO**

**Repair or replace the harness.**
**Perform "After-inspection work" of INFORMATION section.**

| 4 | Check for disconnection in the coolant cut off valve wire harness |
|---|---|

1. Connect the coolant cut off valve connector.
2. Connect the signal check harness and use the electrical tester to measure resistance between the terminals of the DCU 86P vehicle-side connector.

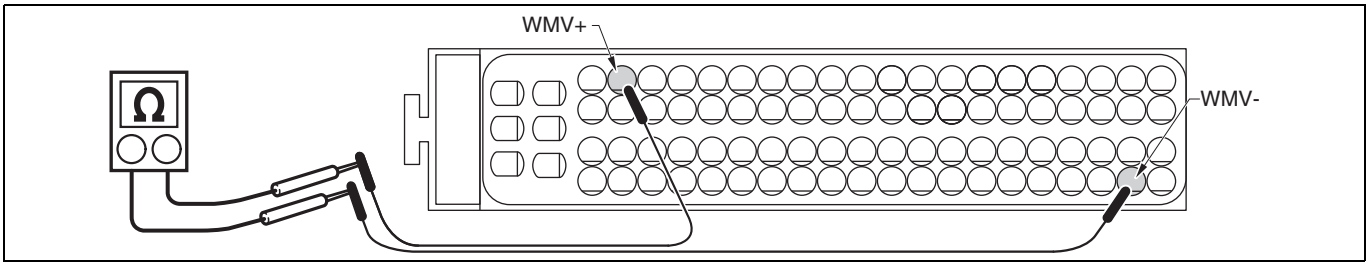


SAPH16F020400195

| Measurement conditions | Tester connections | Standard values |
|---|---|---|
| Starter switch: LOCK | DCU 86P vehicle-side connector WMV+ – WMV- | 20 °C {68 °F}: 9.04 – 9.52 Ω |

**Do the measurements meet the standard value?**

**YES**

**Go to step 5.**

**NO**

**Repair or replace the harness.**
**Perform "After-inspection work" of INFORMATION section.**

| 5 | Check the DTC detected (DCU) [HINO DX ll ] |
|---|---|

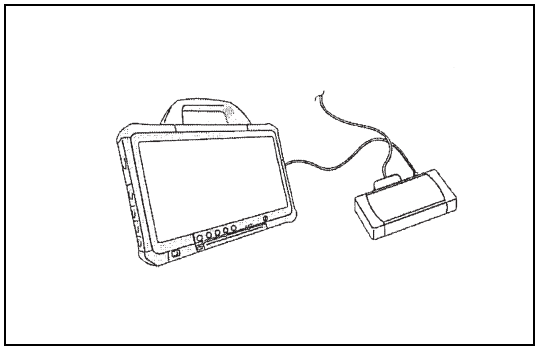

SAPH16F020400196

1. Connect the vehicle to HINO DX II .
2. Set the starter switch to the "ON" position.
3. Select [DCU] and check if P20B3 has been detected.

**Has DTC P20B3 been detected?**

**YES**

**Replace the DCU. (After replacing the DCU, perform a DPR forced regeneration.)**
**Perform "After-inspection work" of INFORMATION section.**

**NO**

**Procedure completed.**
**Perform "After-inspection work" of INFORMATION section.**

# DTC: P20B4

EN01H16F02040F03001055

## DTC: P20B4 Coolant cut off valve - circuit (Circuit high)

INFORMATION

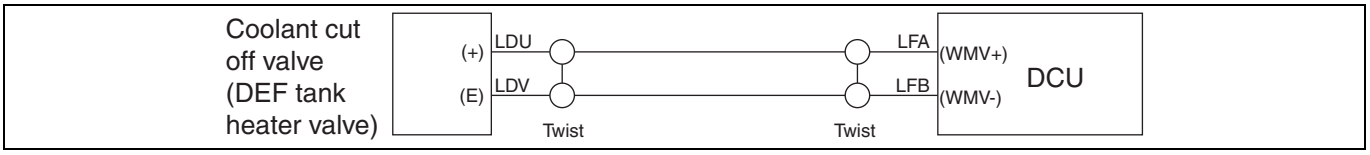


SAPH16F020400197

**1. Technical description**

- DCU detects malfunctions based on the coolant cut off valve circuit voltage.

**<Description of malfunction>**

- Malfunction of coolant cut off valve is detected.

**2. DTC set condition**

(1) DTC detection condition
Starter switch ON.
Coolant cut off valve duty > 0%

(2) Judgement criteria
Coolant cut off valve voltage = 2.7 V for 0.1 sec.

**3. Reset condition**

- After having restored to the normal conditions.

**4. Indication, warning or system control regulation when the DTC is set.**

- MIL: ON

**5. Symptoms on the vehicle when the DTC is set**

**<Symptoms on the vehicle due to backup control (fail safe function)>**

- –

**<Symptoms on the vehicle due to malfunction>**

- Control will not work properly if the DEF freezes.

**6. Pre-inspection work**

- Check if the battery voltage is in the normal range.

**7. After-inspection work**

- Clear all past DTCs.
- Check if no DTC is stored after test drive.

**8. Estimated failure factors**

- Harness disconnection or short-circuit
- Looseness or unsteady contact of connector
- Coolant cut off valve malfunction

## INSPECTION PROCEDURE: P20B4

| 1 | Inspect the coolant cut off valve connector |
|---|---|

1. Check the connection of the coolant cut off valve connector (Looseness and poor contact).

**Was any failure found?**

**YES**

**Connect securely, repair if needed.**
**Perform "After-inspection work" of INFORMATION section.**

**NO**

**Go to step 2.**

| 2 | Check the coolant cut off valve unit |
|---|---|

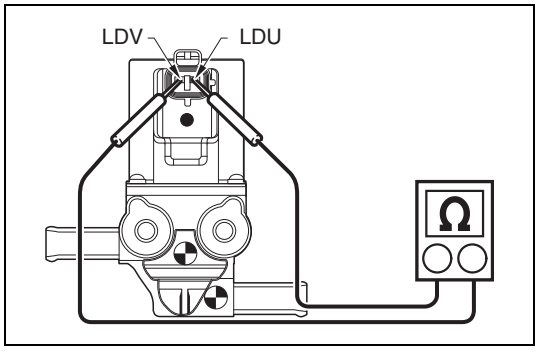

SAPH16F020400198

1. Set the starter switch to the "LOCK" position.
2. Remove the connector of the coolant cut off valve.
3. Use the electrical tester to measure the resistance between the terminals of the coolant cut off valve.

| Measurement conditions | Tester connections | Standard values |
|---|---|---|
| Starter switch: LOCK | Coolant cut off valve connector LDU – LDV | 20 °C {68 °F}: 9.04 – 9.52 Ω |

**Do the measurements meet the standard value?**

**YES**

**Go to step 3.**

**NO**

**Replace the coolant cut off valve.**
**Perform "After-inspection work" of INFORMATION section.**

| 3 | Check for short-circuit in the coolant cut off valve wire harness |
|---|---|

1. Disconnect the DCU 86P connector.
2. Connect the signal check harness and use the electrical tester to measure the resistance between the terminals of the DCU 86P vehicle-side connector and the ground.

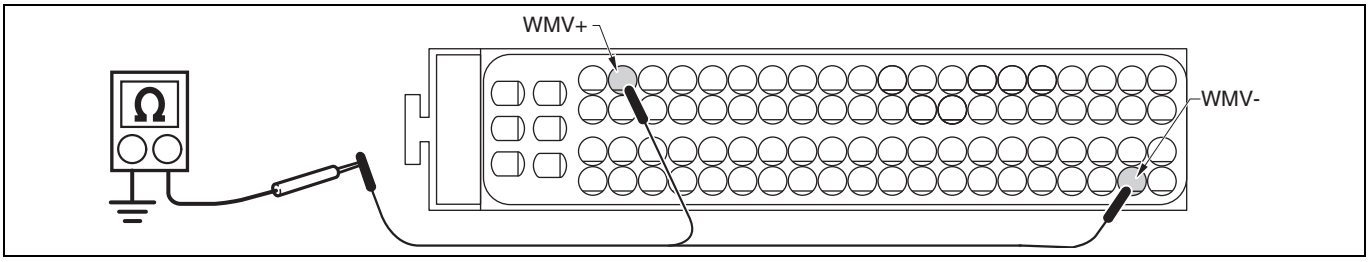


SAPH16F020400199

| Measurement conditions | Tester connections | Standard values |
|---|---|---|
| Starter switch: LOCK | DCU 86P vehicle-side connector<br>WMV+ – Ground<br>WMV- – Ground | ∞ Ω |

**Do the measurements meet the standard value?**

**YES**

**Go to step 4.**

**NO**

**Repair or replace the harness.**
**Perform "After-inspection work" of INFORMATION section.**

| 4 | Check for disconnection in the coolant cut off valve wire harness |
|---|---|

1. Connect the coolant cut off valve connector.
2. Connect the signal check harness and use the electrical tester to measure the resistance between the terminals of the DCU 86P vehicle-side connector.

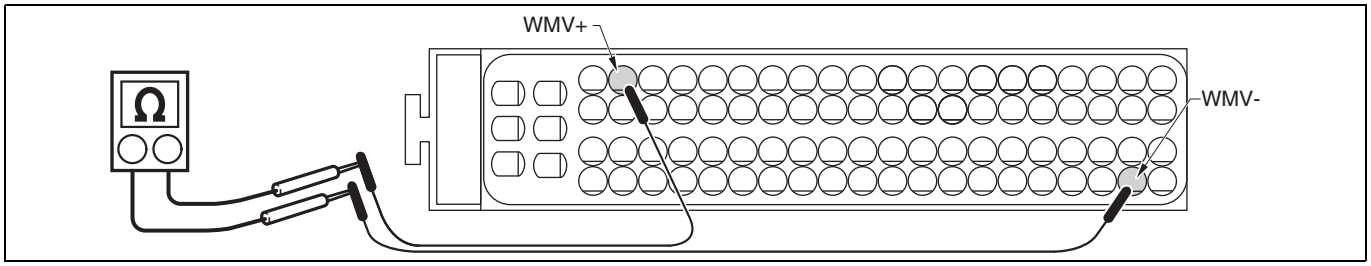


SAPH16F020400200

| Measurement conditions | Tester connections | Standard values |
|---|---|---|
| Starter switch: LOCK | DCU 86P vehicle-side connector WMV+ – WMV- | 20 °C {68 °F}: 9.04 – 9.52 Ω |

**Do the measurements meet the standard value?**

**YES**

**Go to step 5.**

**NO**

**Repair or replace the harness.**
**Perform "After-inspection work" of INFORMATION section.**

| 5 | Check the DTC detected (DCU) |
|---|---|

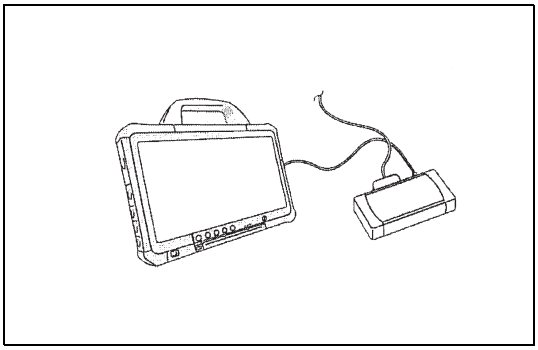

SAPH16F020400201

1. Connect the vehicle to HINO DX II .
2. Set the starter switch to the "ON" position.
3. Select [DCU] and check if P20B4 has been detected.

**Has DTC P20B4 been detected?**

**YES**

**Replace the DCU. (After replacing the DCU, perform a DPR forced regeneration.)**
**Perform "After-inspection work" of INFORMATION section.**

**NO**

**Procedure completed.**
**Perform "After-inspection work" of INFORMATION section.**

# DTC: P20BD, P20B9 and P20C1

EN01H16F02040F03001056

## DTC: P20BD DEF heater 1 failure (Open load / low)
## DTC: P20B9 DEF heater 2 failure (Open load / low)
## DTC: P20C1 DEF heater 3 failure (Open load / low)

INFORMATION

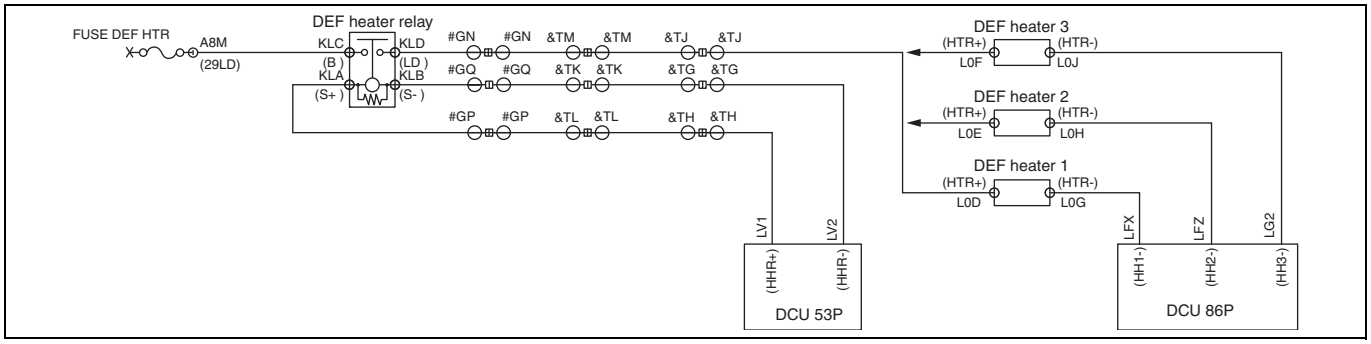


SAPH16F020400202

**1. Technical description**

- Electrify the DEF heater to prevent the freezing of DEF pipings.
- DCU detects harness disconnection or short-circuit based on the DEF heater circuit voltage.

**<Description of malfunction>**

- Malfunction of DEF heater is detected.

**2. DTC set condition**

(1) DTC detection condition

- Starter switch ON.
- When the DEF defrosting control is disabled (DCU detects the ambient temperature > -5 °C {23 °F})

(2) Judgement criteria

Voltage difference of DEF heater 1 drive FET (DCU internal element) is less than 2 V. (P20BD)
Voltage difference of DEF heater 2 drive FET (DCU internal element) is less than 2 V. (P20B9)
Voltage difference of DEF heater 3 drive FET (DCU internal element) is less than 2 V. (P20C1)

**3. Reset condition**

- After having restored to the normal conditions.

**4. Indication, warning or system control regulation when the DTC is set.**

- MIL: ON
- SCR malfunction light: Blink
- "SCR malfunction" appears on the multi-information.
- If malfunction does not improve within 500 miles: engine output is restricted.
- If malfunction does not improve within 2,000 miles: vehicle speed is restricted.

**5. Symptoms on the vehicle when the DTC is set**

**<Symptoms on the vehicle due to backup control (fail safe function)>**

- Engine output is insufficient (when malfunction does not improve within 500 miles).
- Vehicle does not speed up (when malfunction does not improve within 2,000 miles).

**<Symptoms on the vehicle due to malfunction>**

- Deterioration of the function to prevent the freezing of DEF pipings.

**6. Pre-inspection work**

- Check if the battery voltage is in the normal range.

**7. After-inspection work**

- Clear all past DTCs. (Also clear DTC P204F (DEF SCR system failure) of the engine ECU side.)
- Using HINO DX II , set DEF heater ON for 10 seconds and after this set to OFF.
- Check if no DTC is stored after test drive.

**8. Estimated failure factors**

- Harness disconnection or short-circuit of GND
- DEF heater (1, 2 or 3) malfunction
- DEF heater relay malfunction
- FUSE DEF HTR malfunction
- Harness short-circuit
- DCU malfunction

## INSPECTION PROCEDURE: P20BD, P20B9 and P20C1

| 1 | Inspect the fuse |
|---|---|

1. Check the fuse (FUSE DEF HTR) for fusing or improper fit.

**Was any failure found?**

**YES**

**Connect the fuse properly or replace. Perform "After-inspection work" of INFORMATION section.**

**NO**

**Go to step 2.**

| 2 | Inspect the DEF heater relay |
|---|---|

1. Check the connection of the DEF heater relay (inside cab) (Looseness or poor contact).

**Was any failure found?**

**YES**

**Connect securely, repair if needed. Perform "After-inspection work" of INFORMATION section.**

**NO**

**Go to step 3.**

| 3 | Inspect the DEF heater relay unit |
|---|---|

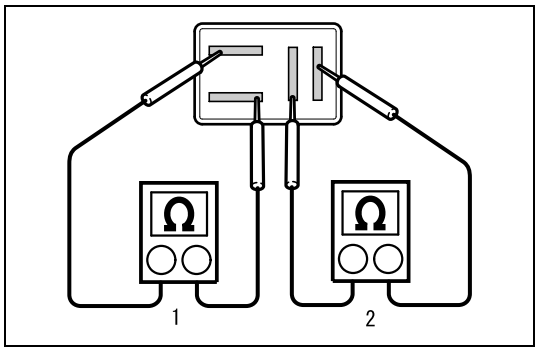


SAPH16F020400203

1. Set the starter switch to the "LOCK" position.
2. Disconnect the DEF heater relay.
3. Use the electrical tester to measure the resistance between the terminals of the DEF heater relay.

| Tester connections | Standard values |
|---|---|
| DEF heater relay terminals | 1 in the figure: 320 Ω<br>2 in the figure: ∞ Ω |

**Do the measurements meet the standard value?**

**YES**

**Go to step 4.**

**NO**

**Replace the DEF heater relay. Perform "After-inspection work" of INFORMATION section.**

| 4 | Inspect the DEF heater relay power supply circuit |
|---|---|

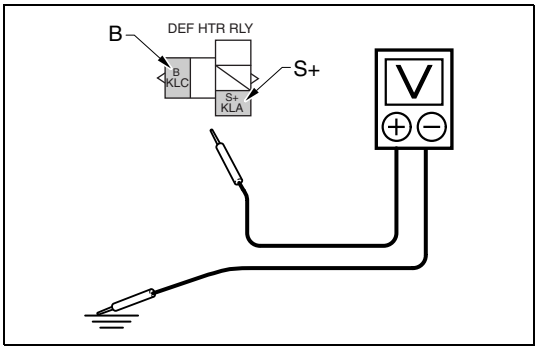


SAPH16F020400204

1. Set the starter switch to the "ON" position.
2. Use the electrical tester to measure the voltage between each terminal in the DEF heater relay vehicle-side connector (inside the cab) and ground.

| Measurement conditions | Tester connections | Standard values |
|---|---|---|
| **Starter switch: ON<br>Disconnect DEF heater relay** | **DEF heater relay vehicle-side connector<br>B – Ground<br>S+ – Ground** | **10 V or more** |

**Do the measurements meet the standard value?**

**YES**

**Go to step 5.**

**NO**

**Repair or replace the DEF heater relay power supply circuit.**
**Perform "After-inspection work" of INFORMATION section.**

| 5 | Inspect the DEF heater (1, 2 or 3) connector |
|---|---|

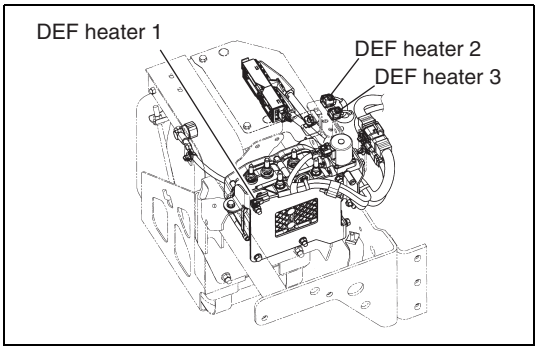


SAPH16F020400205

1. Check the connection of the DEF heater (1, 2 or 3) connector (Looseness and poor contact).

**Was any failure found?**

**YES**

**Connect securely, repair if needed.**
**Perform "After-inspection work" of INFORMATION section.**

**NO**

**Go to step 6.**

| 6 | Inspect the DEF heater (1, 2 or 3) pipe |
|---|---|

1. Check for cracks (leakage of DEF, etc) in the DEF heater (1, 2 or 3) pipe.

**Was any failure found?**

**YES**

**Replace the DEF heater pipe.**
**Perform "After-inspection work" of INFORMATION section.**

**NO**

**Go to step 7.**

| 7 | Inspect the DEF heater (1, 2 or 3) power supply circuit (1) |
|---|---|

1. Set the starter switch to the "LOCK" position.
2. Disconnect the DEF heater relay.
3. Disconnect the DEF heater (1, 2 or 3) connector.
4. Use the electrical tester to measure the continuity between the terminals of the DEF heater relay vehicle-side connector (inside the cab) and the DEF heater (1, 2 or 3) vehicle-side connector.

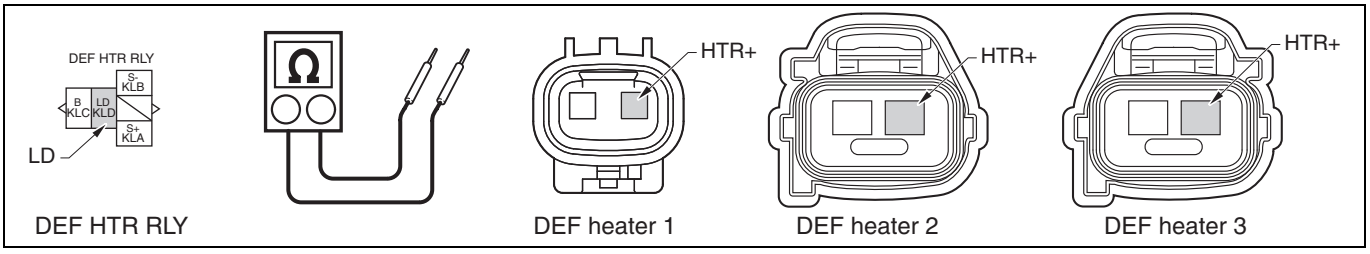


SAPH16F020400206

| Measurement conditions | Tester connections | Standard values |
|---|---|---|
| **Starter switch: LOCK<br>Disconnect the DEF heater relay<br>Disconnect the DEF heater connector** | **DEF heater relay vehicle-side connector – DEF heater (1, 2 or 3) vehicle-side connector<br>LD – HTR+** | **Continue** |

**Do the measurements meet the standard value?**

| YES | NO |
|---|---|
| **Go to step 8.** | **Repair or replace the harness. Perform "After-inspection work" of INFORMATION section.** |

## 8 Inspect the DEF heater (1, 2 or 3) power supply circuit (2)

1. Disconnect the DCU 86P connector.
2. Use the electrical tester to measure the continuity between the terminals of the DEF heater (1, 2 or 3) vehicle-side connector and the terminals of the DCU 86P vehicle-side connector.

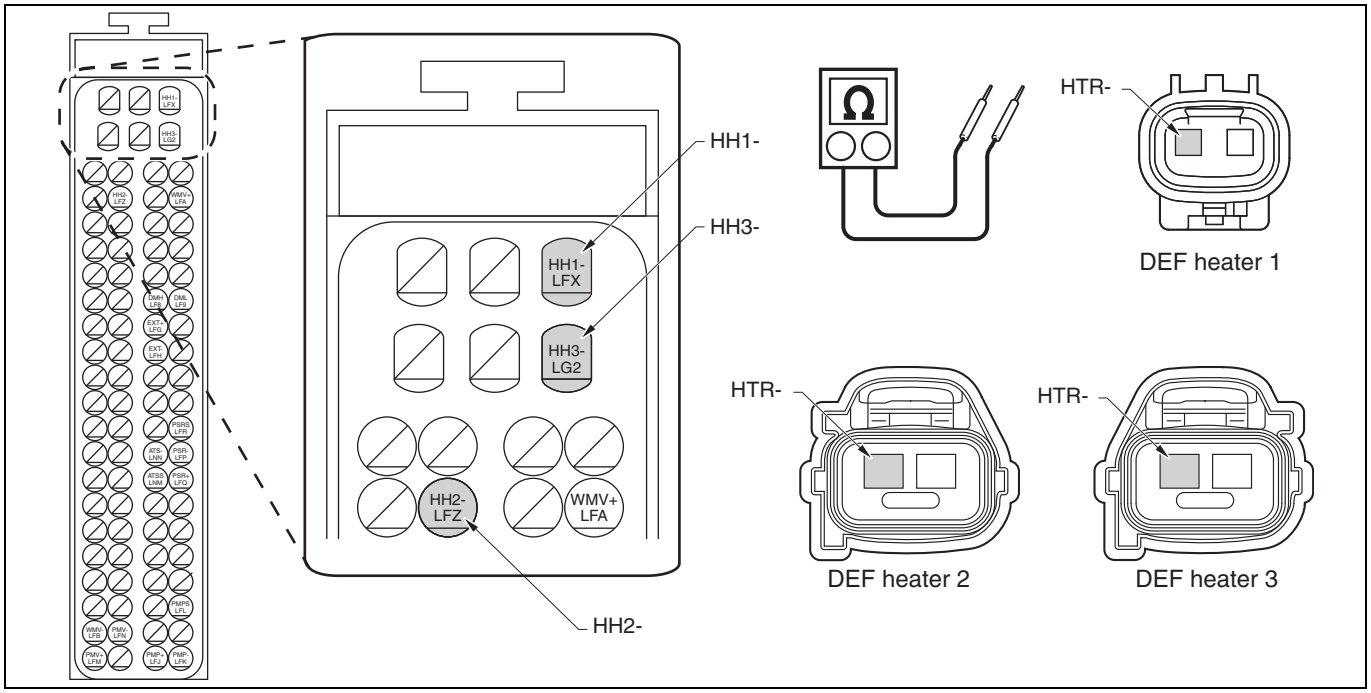


SAPH16F020400207

| Measurement conditions | Tester connections | Standard values |
|---|---|---|
| **Starter switch: LOCK<br>Disconnect the DEF heater connector<br>Disconnect the DCU 86P connector** | **DEF heater (1, 2 or 3) connector – DCU 86P vehicle-side connector<br>HTR- – HH1-<br>HTR- – HH2-<br>HTR- – HH3-** | **Continue** |

| Do the measurements meet the standard value? |
|---|

**YES**

**Go to step 9.**

**NO**

**Repair or replace the harness.**
**Perform "After-inspection work" of INFORMATION section.**

| 9 | **Inspect the DEF heater (1, 2 or 3) unit** |
|---|---|

1. Use the electrical tester to measure the continuity between the terminals of the DEF heater (1, 2 or 3).

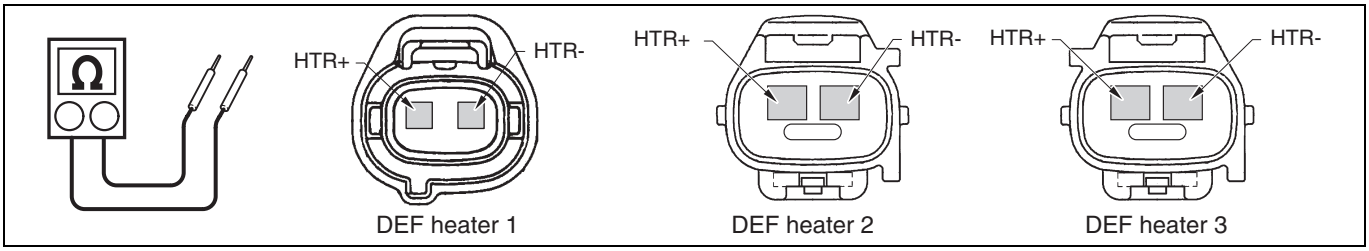


SAPH16F020400208

| Measurement conditions | Tester connections | Standard values |
|---|---|---|
| **Starter switch: LOCK<br>Disconnect the DEF heater connector** | **DEF heater (1, 2 or 3)<br>HTR+ – HTR-** | **Continue** |

**Do the measurements meet the standard value?**

**YES**

**Replace the DCU.**
**Go to step 10.**

**NO**

**Replace the DEF heater (1, 2 or 3).**
**Perform "After-inspection work" of INFORMATION section.**

| 10 | Check the DTC detected (DCU) [HINO DX II ] |
|---|---|

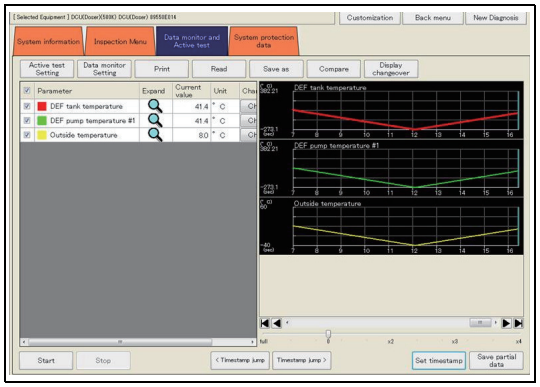


SAPH16F020400209

1. Start the engine and keep the engine idling for about 10 minutes at room temperature (Around 20 °C {68 °F}).
2. Set the starter switch to the "LOCK" position.
3. Set the starter switch to the "ON" position.
4. Select [DCU].
5. Set up data monitor [DEF tank temperature], [DEF pump temperature #1] and [Outside temperature].
6. Go to next [7], if every temperature values are exceeding -5 °C {23 °F}. Go back to [1], if either temperature value is not exceeding -5 °C {23 °F}.
7. Set the starter switch to the "LOCK" position for 30 second.
8. Set the starter switch to the "ON" position.

**Has DTC P20BD, P20B9 and P20C1 been detected?**

**YES**

**Replace the DCU.**
**Perform "After-inspection work" of INFORMATION section.**

**NO**

**Procedure completed.**
**Perform "After-inspection work" of INFORMATION section.**

# DTC: P20C0, P20BC and P20C4

EN01H16F02040F03001057

## DTC: P20C0 DEF heater 1 failure (High)
## DTC: P20BC DEF heater 2 failure (High)
## DTC: P20C4 DEF heater 3 failure (High)

INFORMATION

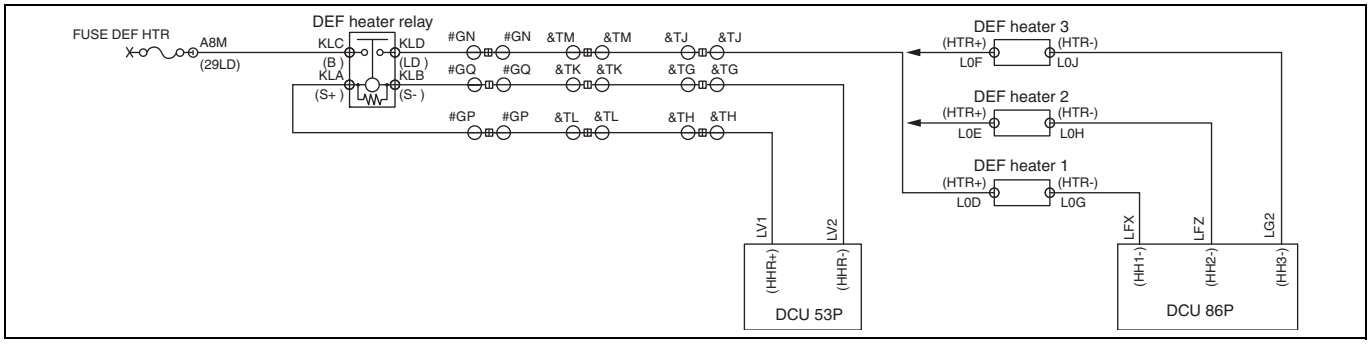


SAPH16F020400210

**1. Technical description**

- Electrify the DEF heater to prevent the freezing of DEF pipings.
- DCU detects +B short-circuit based on the DEF heater circuit voltage.

**<Description of malfunction>**

- Malfunction of DEF heater is detected.

**2. DTC set condition**

(1) DTC detection condition
- Starter switch ON.
- DEF defrosting control ON.

(2) Judgement criteria
Voltage difference of DEF heater 1 drive FET (DCU internal element) is more than 0.1 V. (P20C0)
Voltage difference of DEF heater 2 drive FET (DCU internal element) is more than 0.1 V. (P20BC)
Voltage difference of DEF heater 3 drive FET (DCU internal element) is more than 0.1 V. (P20C4)

**3. Reset condition**

- After having restored to the normal conditions.

**4. Indication, warning or system control regulation when the DTC is set.**

- MIL: ON
- SCR malfunction light: ON

**5. Symptoms on the vehicle when the DTC is set**

**<Symptoms on the vehicle due to backup control (fail safe function)>**

- -

**<Symptoms on the vehicle due to malfunction>**

- Deterioration of the function to prevent the freezing of DEF pipings.

**6. Pre-inspection work**

- Check if the battery voltage is in the normal range.

**7. After-inspection work**

- Clear all past DTCs.
  (Also clear DTC P204F (DEF SCR system failure) of the engine ECU side.)
- Using HINO DX II , set DEF heater ON for 10 seconds.
- Check if no DTC is stored after test drive.

**8. Estimated failure factors**

- Harness disconnection or short-circuit of +B
- DEF heater (1, 2 or 3) malfunction
- DEF heater relay malfunction

## INSPECTION PROCEDURE: P20C0, P20BC and P20C4

| 1 | Check the DTC detected (DCU) [HINO DX II ] |
|---|---|

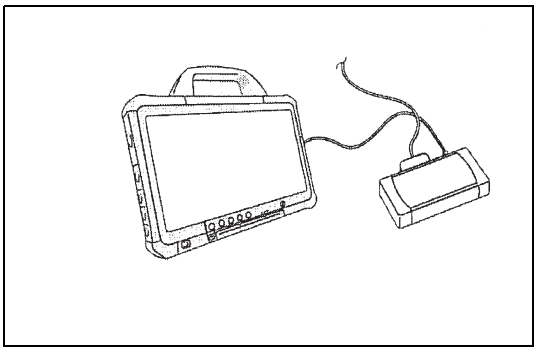

SAPH16F020400211

1. Set the starter switch to the "LOCK" position.
2. Connect the vehicle to HINO DX II .
3. Set the starter switch to the "ON" position.
4. Select [DCU] and check if any DTC below (related with DEF heater relay) has been detected.
   P21C2, P21C3, P21C4

**Has any DTC been detected?**

**YES**

**Go to diagnosis procedure of a related DTC.**

**NO**

**Go to step 2.**

| 2 | Inspect the DEF heater (1, 2 or 3) connector |
|---|---|

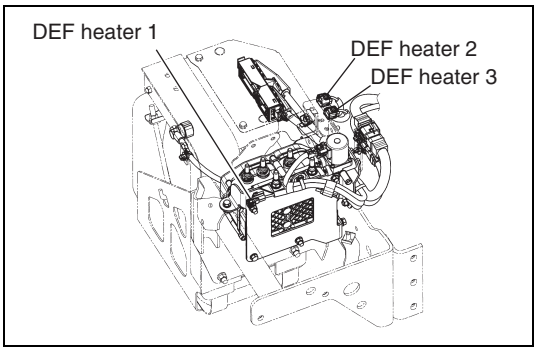


SAPH16F020400212

1. Check the connection of the DEF heater (1, 2 or 3) connector (Looseness and poor contact).

**Was any failure found?**

**YES**

**Connect securely, repair if needed.**
**Perform "After-inspection work" of INFORMATION section.**

**NO**

**Go to step 3.**

| 3 | Inspect the DEF heater (1, 2 or 3) pipe |
|---|---|

1. Check for cracks (leakage of DEF, etc) in the DEF heater (1, 2 or 3) pipe.

**Was any failure found?**

| YES | NO |
|---|---|
| **Replace the DEF heater pipe. Perform "After-inspection work" of INFORMATION section.** | **Go to step 4.** |

| 4 | **Inspect the DEF heater (1, 2 or 3) power supply circuit (1)** |
|---|---|

1. Set the starter switch to the "LOCK" position.
2. Disconnect the DEF heater relay.
3. Disconnect the DEF heater (1, 2 or 3) connector.
4. Set the starter switch to the "ON" position.
   (P21C3 is detected, but it is no problem as it is caused by the disconnection of the DEF heater relay.)
5. Use the electrical tester to measure the voltage between the terminals of the DEF heater (1, 2 or 3) vehicle-side connector and the ground.

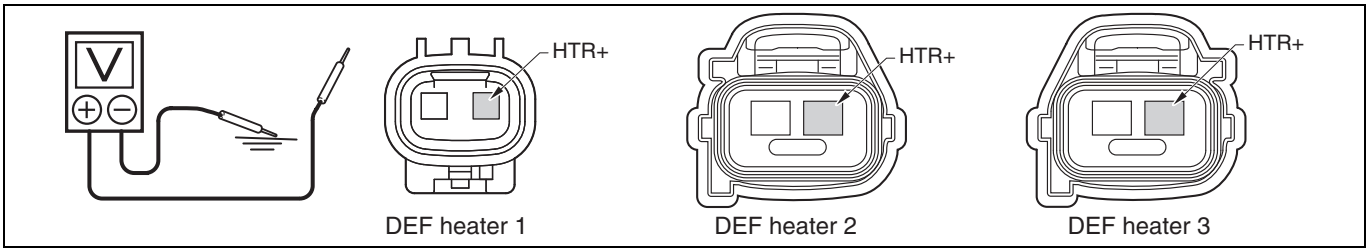


SAPH16F020400213

6. Use the electrical tester to measure the continuity between the terminals of the DEF heater (1, 2 or 3) vehicle-side connector and the ground.

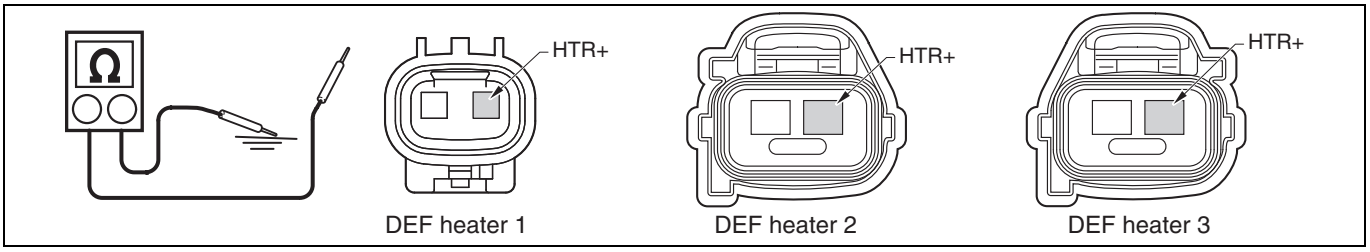


SAPH16F020400214

| Measurement conditions | Tester connections | Standard values |
|---|---|---|
| **Starter switch: ON<br>Disconnect DEF heater relay<br>Disconnect DEF heater connector** | **DEF heater (1, 2 or 3) vehicle-side connector – Ground<br>HTR+ – Ground** | **5: 0 V<br>6: No Continuity** |

| Do the measurements meet the standard value? | |
|---|---|
| **YES** | **NO** |
| **Go to step 5.** | **Repair or replace the harness.<br>Perform "After-inspection work" of INFORMATION section.** |

| 5 | Inspect the DEF heater (1, 2 or 3) power supply circuit (2) |
|---|---|

1. Set the starter switch to the "LOCK" position.
2. Connect the DEF heater (1, 2 or 3) connector.
3. Disconnect the DCU 86P connector.
4. Set the starter switch to the "ON" position.
   (P21C3 is detected, but it is no problem as it is caused by the disconnection of the DEF heater relay.)
5. Use the electrical tester to measure the voltage between the terminals of the DCU 86P vehicle-side connector and the ground.

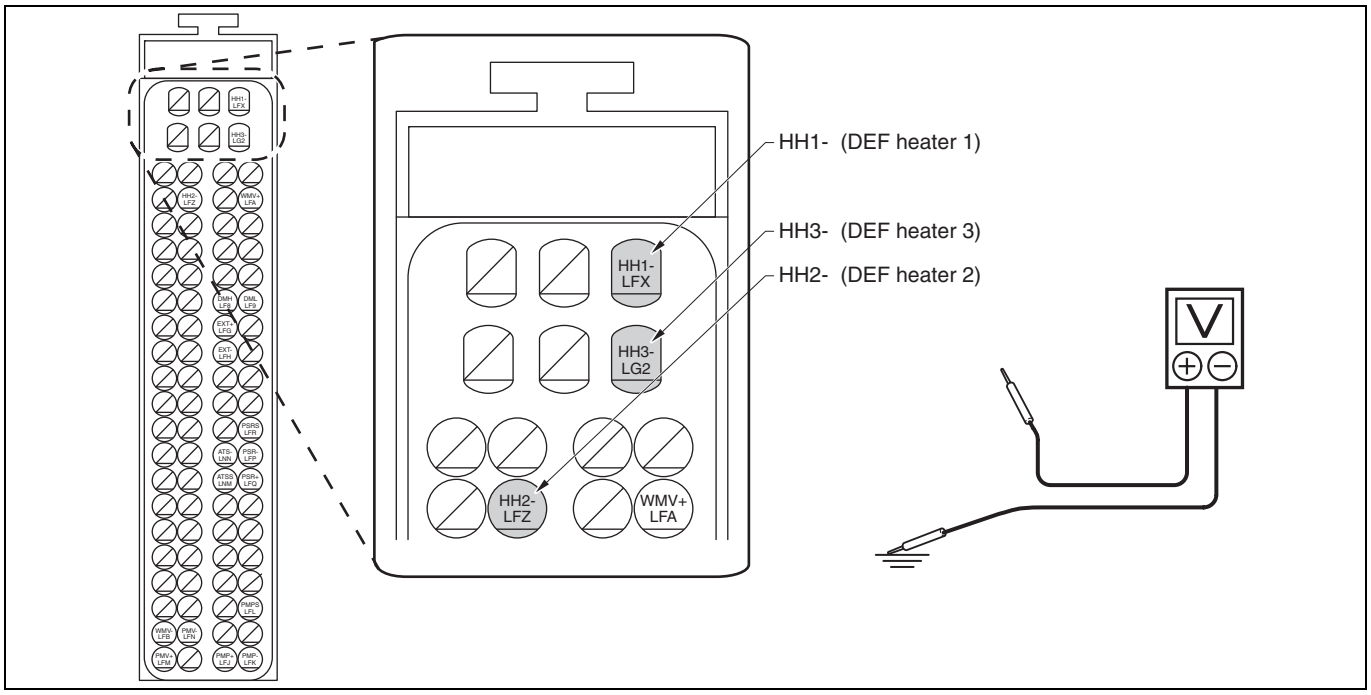


SAPH16F020400215

6. Use the electrical tester to measure the continuity between the terminals of the DCU 86P vehicle-side connector and the ground.

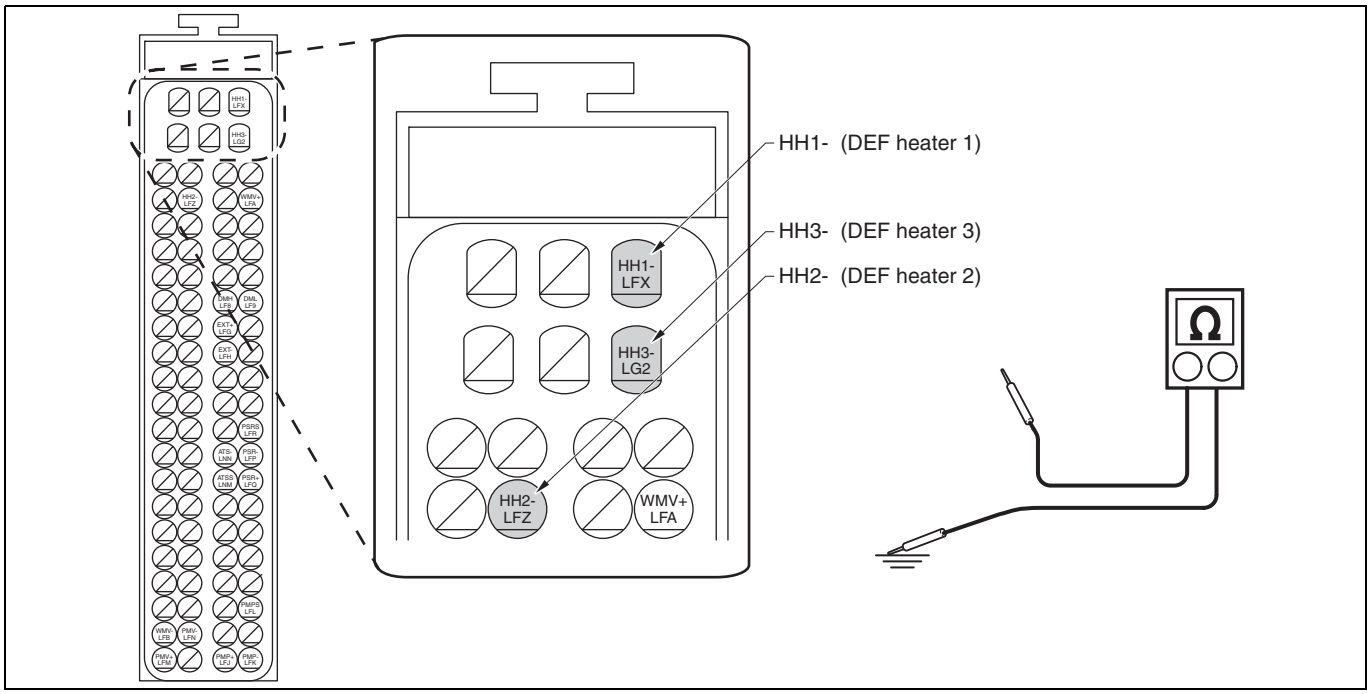


SAPH16F020400216

| Measurement conditions | Tester connections | Standard values |
|---|---|---|
| **Starter switch: ON<br>Disconnect DEF heater relay** | **DCU 86P vehicle-side connector – Ground<br>HH1- – Ground<br>HH2- – Ground<br>HH3- – Ground** | **5: 0 V<br>6: No Continuity** |

**Do the measurements meet the standard value?**

**YES**

**Replace the DCU.**
**Perform "After-inspection work" of INFORMATION section.**

**NO**

**Repair or replace the harness.**
**Perform "After-inspection work" of INFORMATION section.**

# DTC: P20E8

EN01H16F02040F03001058

## DTC: P20E8 Suction line pressure build up check

INFORMATION

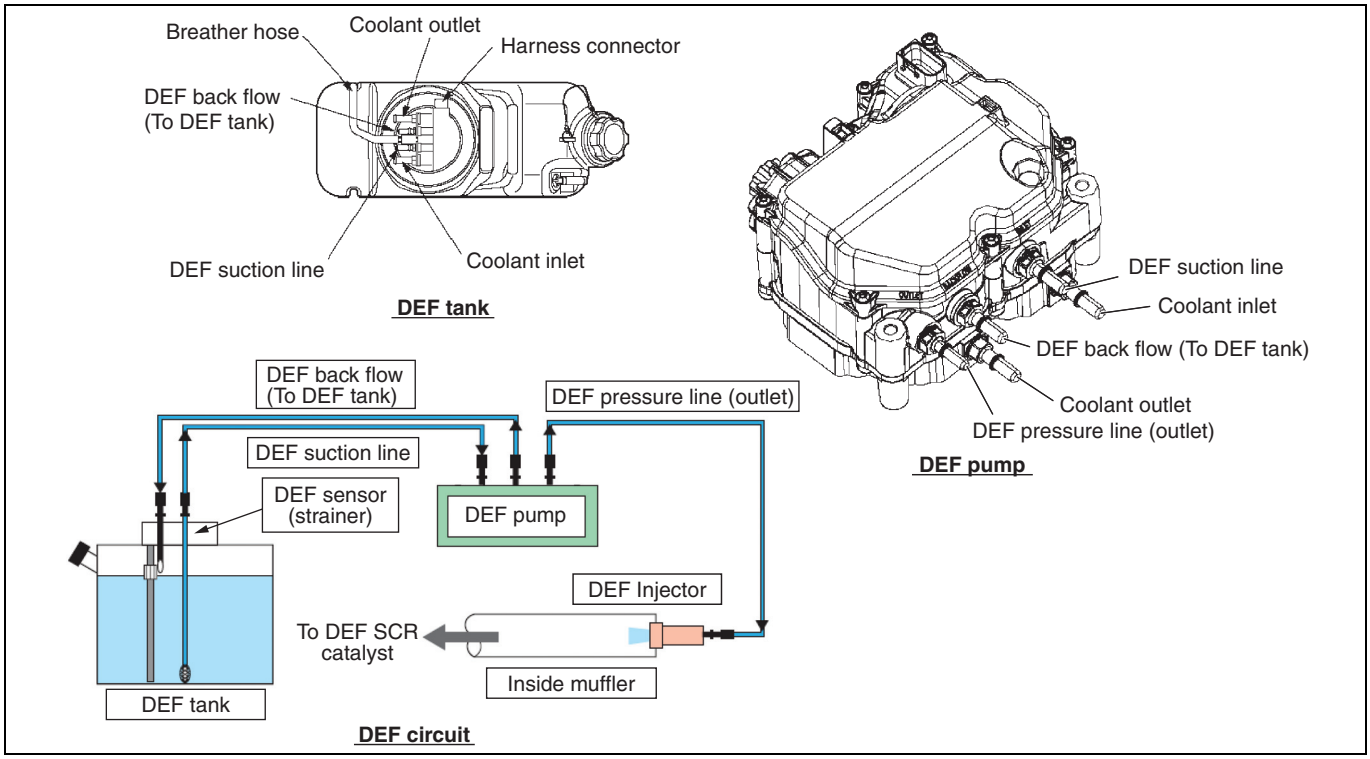


SAPH16F020400217

**1. Technical description**

- DEF line pressure depends on ejection of the DEF pump.
- DEF pump ejection is determined by value of DEF pressure sensor which is built in DEF pump.

**<Description of malfunction>**

- Abnormal pressure in the DEF pipe is detected.

**2. DTC set condition**

(1) DTC detection condition
Exhaust gas temperature (SCR inlet) > 150 °C {302 °F}
DEF defrosting is done.

(2) Judgement criteria
DEF pressure does not rise to 650 kPa {94 psi} or more for approx. 6 minutes during "Pressure Build Up Mode".

**<Sample: Normal DEF Pressurizing Manner>**

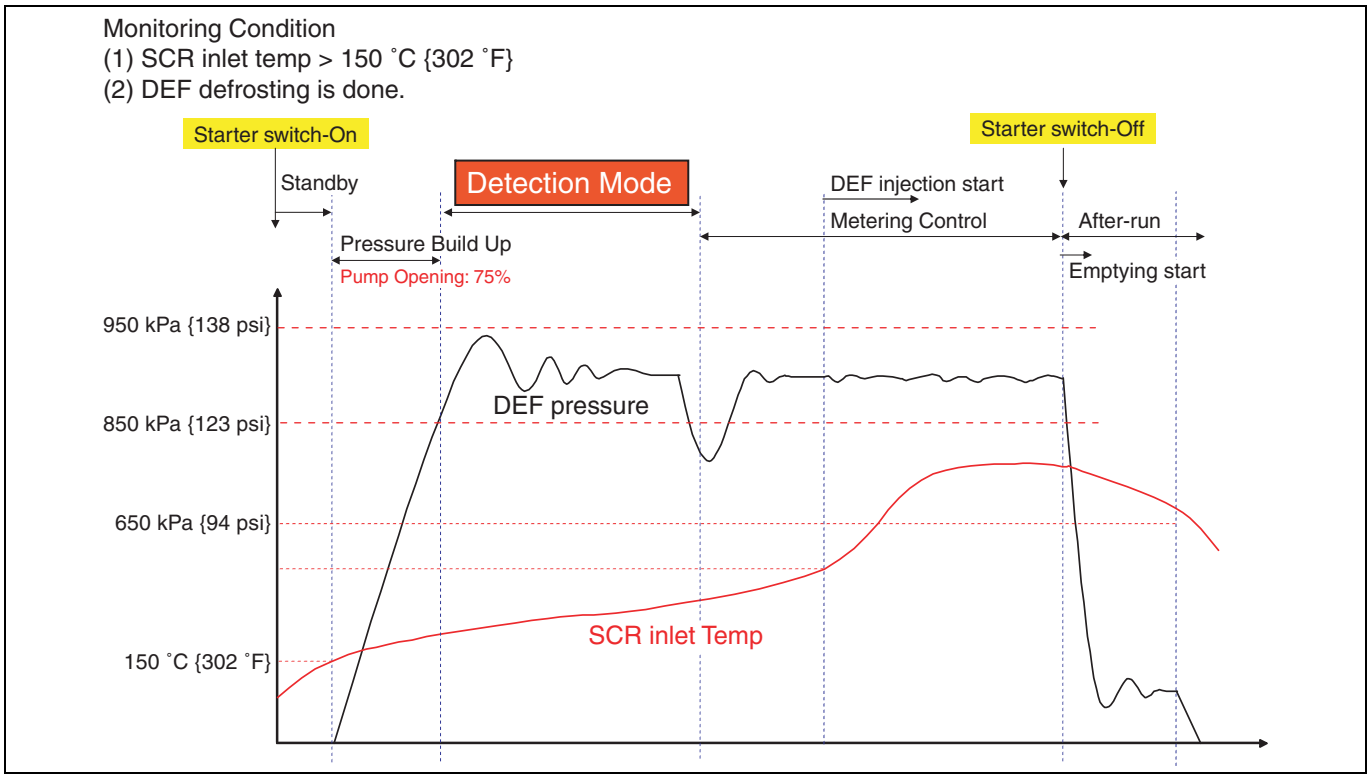


SAPH16F020400218

**3. Reset condition**

- After having restored to the normal conditions.

**4. Indication, warning or system control regulation when the DTC is set.**

- MIL: ON
- SCR malfunction light: ON
- DEF injection is stopped.
- NOx reduction quantity monitoring is aborted.
- If malfunction does not improve within 500 miles: engine output is restricted.
- If malfunction does not improve within 2,000 miles: vehicle speed is restricted.

**5. Symptoms on the vehicle when the DTC is set**

**<Symptoms on the vehicle due to backup control (fail safe function)>**

- NOx reduction function is prevented.
- Engine output is insufficient (when malfunction does not improve within 500 miles).
- Vehicle does not speed up (when malfunction does not improve within 2,000 miles).

**<Symptoms on the vehicle due to malfunction>**

- –

**6. Pre-inspection work**

- Check if the battery voltage is in the normal range.

**7. After-inspection work**

- Clear all past DTCs.
- Reset "Urea SCR related memory".
- Check if no DTC is stored after test drive.

**8. Estimated failure factors**

- DEF in the DEF tank is empty.
- Strainer in the DEF sensor is clogged.
- Air is entering into DEF suction line.
- DEF suction line is clogged (frozen), or DEF leaks from DEF suction line.
- DEF pump main filter element is clogged.
- DEF pump inlet connector filter is clogged.
- Leak from DEF pump.
- DEF pump malfunction.
- Clogged DEF tank breather hose.

**NOTICE**
**DEF -SCR system can be damaged by Diesel filling up to the tank.**
**If DEF pump main filter has a yellow slime, it is an evidence of biodiesel filled to the tank.**

## INSPECTION PROCEDURE: P20E8

| 1 | Inspect the DEF quantity, Check the DTC history |
|---|---|

1. Connect the vehicle to HINO DX II .
2. Set the starter switch to the "ON" position.
3. Select [Engine] and check if P203F has been detected.
4. Check the DEF quantity in the DEF tank visually.

**HINT**
**P203F is detected when remaining DEF level in the DEF tank is less than 5%**

**Has DTC P203F been detected? Is the DEF tank empty?**

**YES**

**Refill the DEF.**
**The unit can be released after DEF tank breather hose cleaning.**
**Perform "After-inspection work" of INFORMATION section.**

**NO**

**Go to step 2.**

| 2 | Check DEF leaks from the filter cap |
|---|---|

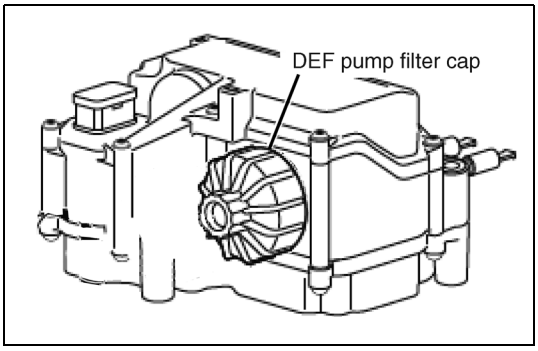

SAPH16F020400219

1. Check the tightening torque of the DEF pump filter cap.
(Check for the DEF leakage or crystallization from the DEF tank filter cap.)

**Tightening torque:**
**20 – 25 N·m {204 – 255 kgf·cm, 15 – 18 lbf·ft}**

**Was the filter cap tightened correctly with the correct torque?**

**YES**

**<The cap is tightened to the correct torque and no DEF leaks.>**
**Go to step 3.**

**NO**

**Tighten the filter cap with specified torque.**
**The unit can be released after DEF tank breather hose cleaning.**
**Perform "After-inspection work" of INFORMATION section.**

| 3 | Inspect the DEF pump electrical connector |
|---|---|

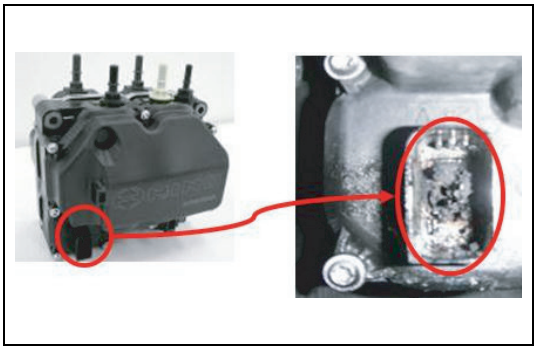

SAPH16F020400220

1. Check DEF pump electrical connectors visually.

**Was any failure found?**

**YES**

**Repair or replace the connectors.**
**If the connector corroded, replace both DEF pump and wire harness.**
**The unit can be released after DEF tank breather hose cleaning.**
**Perform "After-inspection work" of INFORMATION section.**

**NO**

**Go to step 4.**

| 4 | Inspect the DEF line between DEF tank and pump |
|---|---|

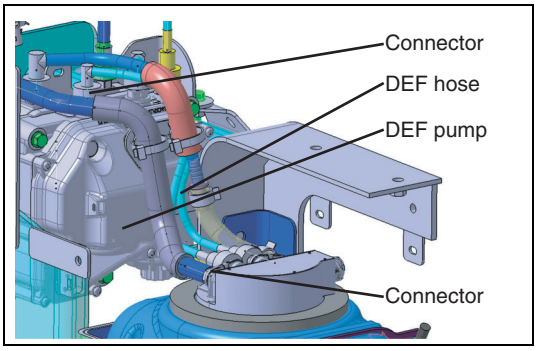


SAPH16F020400221

1. Check all connectors and DEF hoses between DEF tank and DEF pump and check if they are free of leaks and DEF crystals.
2. Gently pull on connectors and make sure they are securely connected.

- DEF hose connector (DEF pump side)
- DEF hose (suction side)

**HINT**
**If DEF leaks, deposits of DEF crystals will form around the muffler.**

**Were DEF leaks found?**

**YES**

**Replace the DEF line (connector and hose) between DEF tank and pump.**
**The unit can be released after DEF tank breather hose cleaning.**
**Perform "After-inspection work" of INFORMATION section.**

**NO**

**Go to step 5.**

| 5 | Inspect the DEF line between DEF tank and pump |
|---|---|

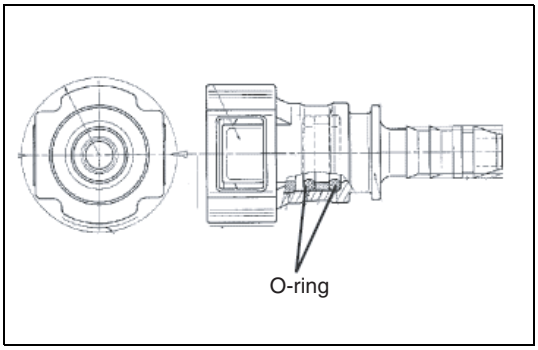


SAPH16F020400222

1. Check condition of the O-ring inside the DEF connector. (No crack on O-ring, No contaminant on sealing surface.)

**Was any failure found?**

**YES**

**Replace the DEF line (connector and hose) between DEF tank and pump.**
**The unit can be released after DEF tank breather hose cleaning.**
**Perform "After-inspection work" of INFORMATION section.**

**NO**

**Go to step 6.**

| 6 | Inspect the inside of DEF tank and DEF pick-up unit (DEF sensor) |
|---|---|

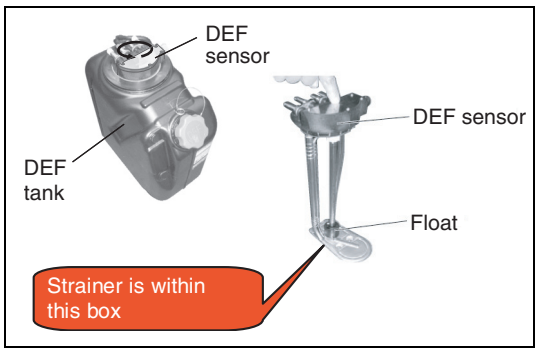


SAPH16F020400223

1. Remove the DEF tank from the vehicle.
2. Remove the DEF pick-up assembly (DEF sensor) from the DEF tank.
3. Drain the DEF from the DEF tank and check if large debris which can cover DEF suction area are found or fibrous debris are found in the DEF tank, strainer of DEF pick-up unit (in the DEF sensor) or drained DEF.

**Was any failure found?**

**YES**

**Replace DEF, DEF pump inlet connector, DEF pick-up unit (DEF sensor) and DEF line between DEF tank and pump.**
**Remove the foreign objects and clean the DEF tank.**

**NOTICE**
**The DEF tank must be cleaned with fresh water or diluted DEF.**

**The unit can be released after DEF tank breather hose cleaning.**
**Perform "After-inspection work" of INFORMATION section.**

**NO**

**Go to step 7.**

## 7 DEF pump opening check [HINO DX II ]

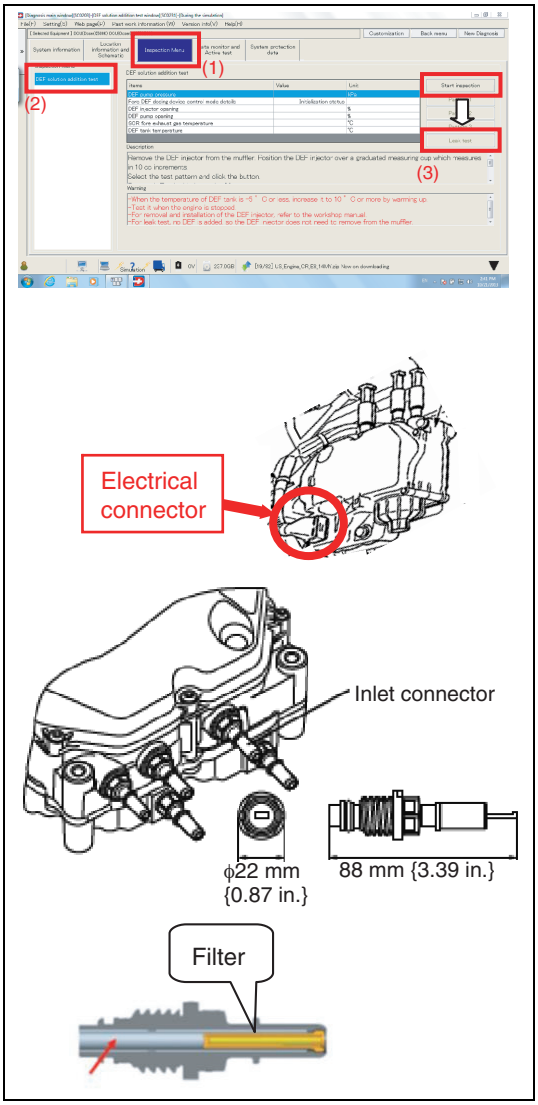


SAPH16F020400224

Replace the DEF pump inlet connector and check the DEF pressure.

**HINT**

**If the inlet connector is clogged with debris, the debris will be moved to the strainer side by the after-run process. Therefore, use the following procedure to replace the inlet connector so that an after-run is not executed.**

1. Set the starter switch to the "LOCK" position.
2. Connect the vehicle to HINO DX II .
3. Set the starter switch to the "ON" position.
4. Select [DCU].
5. Perform [Leak test] for 3 minutes from the [DEF solution addition test] in [Inspection Menu] on HINO DX II .
   <Inspection procedure>
   (1) Select [Inspection Menu].
   (2) Select [DEF solution addition test].
   (3) Click [Start inspection] and then [leak test].

**NOTICE**

**Make sure to confirm no frozen DEF within DEF tank, pump and line prior this test.**
**Otherwise, DEF pump may be damaged.**

6. Close HINO DX II .
7. Disconnect the electrical connector from the DEF pump (with starter switch ON position) and wrap the disconnected connector by the plastic bag for prevention of water/DEF entering.
8. Set the starter switch to the “LOCK” position and wait for 1 minute.
9. Disconnect the electrical connector from the DCU and wrap the disconnected connector by the plastic bag for prevention of water/DEF entering.
10. Disconnect the DEF suction line from inlet connector of the DEF pump.
11. Replace the inlet connector of the DEF pump to new one (Oil the O-ring with Mobil velocite oil No. 6 or equivalent).

    **Tightening torque for connector:**
    **4.0 – 5.0 N·m {41 – 51 kgf·cm, 3.0 – 3.6 lbf·ft}**

12. Connect the DEF suction line to inlet connector of the DEF pump.
13. Connect the electrical connector to the DCU and the DEF pump.
14. Set the starter switch to the "ON" position, and conduct the DEF pump leak test with HINO DX II again. And read the DEF pump pressure on the DX II screen.

**HINT**
**Why DEF inlet connector should be replaced?**
**DEF inlet connector has a filter, and intermittently DEF pressure won't build up can be made by contaminated DEF inlet connector. Normal DEF pressure occasionally happened although there is 90 % of restriction in the filter.**

**NOTICE**

- **DEF pump is a precision instruments, and at the replacement of the connector, clean around it to prevent mixing foreign objects, and work in the clean environment where the cloud of dust, etc. does not swirled as possible as you can.**
- **Do not use textile gloves (example: work gloves) at working to prevent the foreign objects to adhere.**
- **As DEF is highly corrosive, take care that it does not get onto surrounding parts. Special care is required as this may cause a malfunction, particularly when DEF comes in contact with electric wiring or connectors. If DEF gets onto a component, wipe it off immediately, using a rag moistened with hot water; if necessary, rinse it off with hot water, and then dry completely. Before connector installation, check visually and make sure that no signs of corrosion etc. are present.**

| Measurement conditions | Standard values |
|---|---|
| Starter switch: ON | The DEF pressure is stable in the 850 to 950 kPa (123.3 to 137.8 psi) range for 60 seconds. |

**Do the measurements meet the standard value?**

**YES**

**The cause is clogged DEF inlet connector.**
**The unit can be released after DEF tank breather hose cleaning.**
**Perform "After-inspection work" of INFORMATION section.**

**NO**

**Go to step 8.**

| 8 | Inspect the DEF suction line [HINO DX II ] |
|---|---|

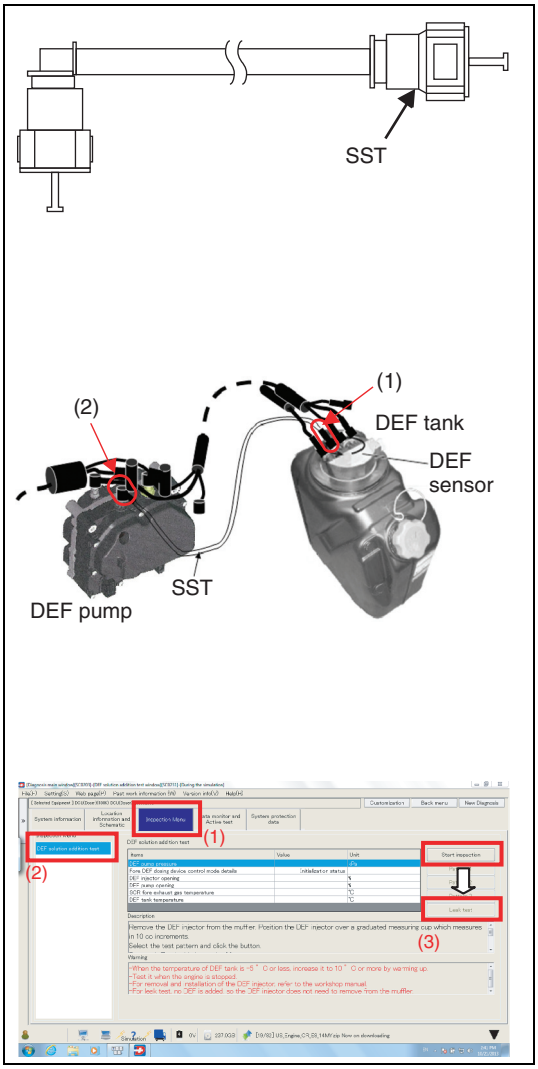


SAPH16F020400225

1. Set the starter switch to the "LOCK" position.
2. Disconnect the DEF suction line between the DEF tank (1) and the DEF pump (2) and connect the SST as the picture shown.
   **SST : HOSE SUB-ASSY, UREA (S0920-E0020)**
3. Connect the vehicle to HINO DX II .
4. Set the starter switch to the "ON" position.
5. Select [DCU].
6. Perform [Leak test] from the [DEF solution addition test]. And read the DEF pump pressure on the DX II screen.
   <Inspection procedure>
   (1) Select [Inspection Menu].
   (2) Select [DEF solution addition test].
   (3) Click [Start inspection] and then [leak test].

| Measurement conditions | Standard values |
|---|---|
| **Starter switch: ON** | **The DEF pressure is stable in the 850 to 950 kPa (123.3 to 137.8 psi) range for 60 seconds.** |

**Do the measurements meet the standard value?**

**YES**

**The cause is clogged DEF suction line. Replace DEF suction line.**
**The unit can be released after DEF tank breather hose cleaning.**
**Perform "After-inspection work" of INFORMATION section.**

**NO**

**Go to step 9.**

| 9 | Inspect the DEF pick-up unit (DEF sensor) |
|---|---|

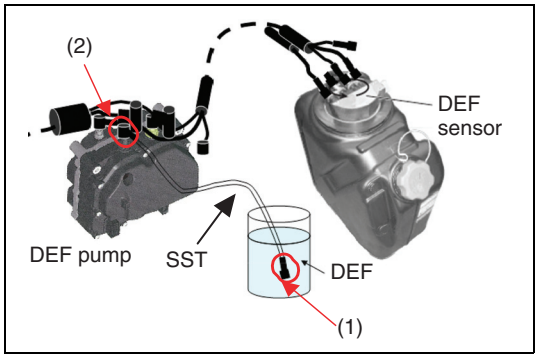


SAPH16F020400226

1. Set the starter switch to the "LOCK" position.
2. Fill a clean small container with clean DEF.
3. Disconnect the SST DEF tank-side connector (1) and put the connector into the container containing the DEF.
4. Set the starter switch to the "ON" position.
5. Perform the [Leak test].
   And read the DEF pump pressure on the DX II screen.

| Measurement conditions | Standard values |
|---|---|
| **Starter switch: ON** | **The DEF pressure is stable in the 850 to 950 kPa (123.3 to 137.8 psi) range for 60 seconds.** |

**Do the measurements meet the standard value?**

**YES**

**The cause is clogged DEF pick-up unit (DEF sensor). Replace DEF sensor.**
**The unit can be released after DEF tank breather hose cleaning.**
**Perform "After-inspection work" of INFORMATION section.**

**NO**

**Replace DEF pump.**
**The unit can be released after DEF tank breather hose cleaning.**
**Perform "After-inspection work" of INFORMATION section.**

# DTC: P20E9

EN01H16F02040F03001059

## DTC: P20E9 Back flow line and pressure line Pressure check

INFORMATION

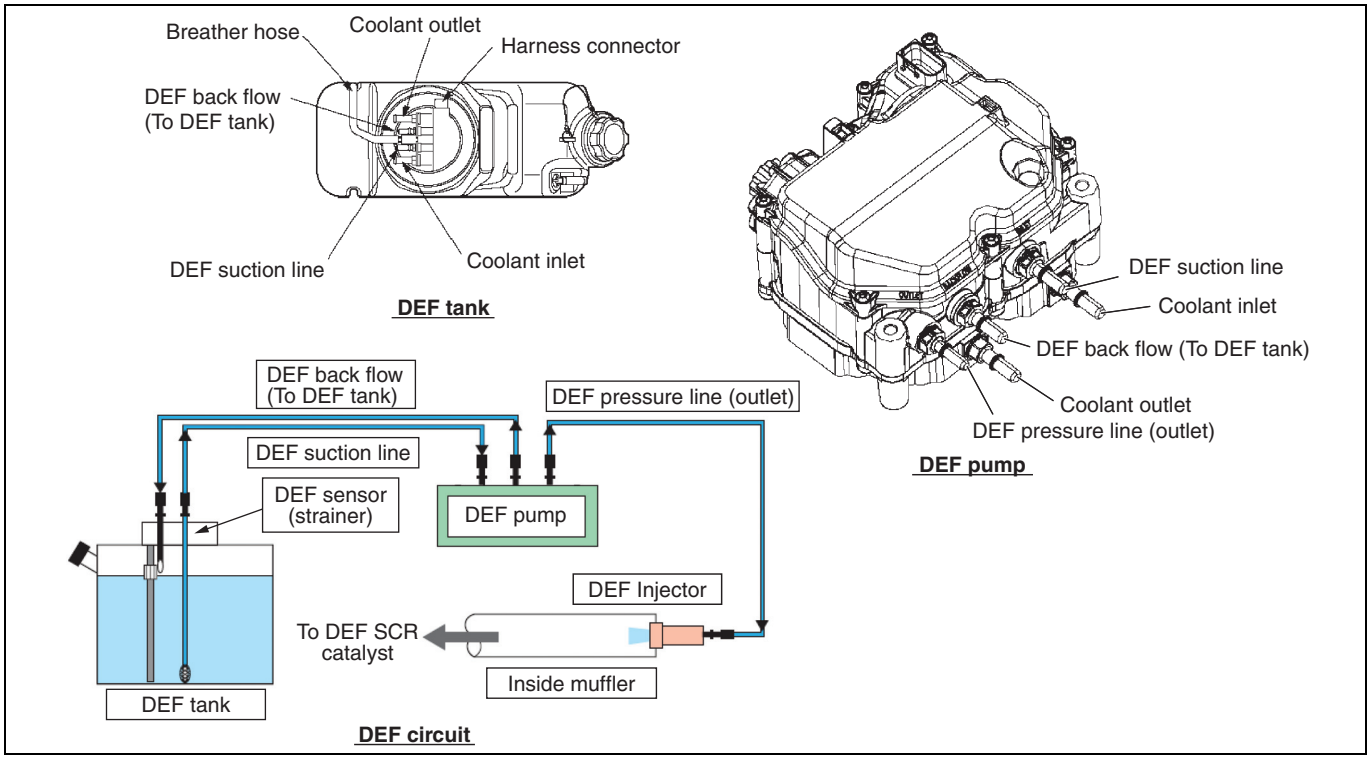


SAPH16F020400227

**1. Technical description**

- DEF line pressure depends on flow quantity of DEF pump.
- DEF pump flow quantity is determined by the value supplied from the DEF pressure sensor which is integrated with the DEF pump.

**<Description of malfunction>**

- Abnormal pressure in the DEF pipe is detected.

**2. DTC set condition**

(1) DTC detection condition
Exhaust gas temperature (SCR inlet) > 150 °C {302 °F}
Defrosting DEF is done.
DEF pressure build up-to 650 kPa {94 psi} is successfully completed.

(2) Judgement criteria

**During "Detection Mode"**

- DEF line pressure does not decrease or is stable at more than 1,000 kPa {145.0 psi} for 2 seconds at 7 % of DEF pump opening.
- DEF pressure was not stable for 8 seconds from 850 to 950 kPa {123.3 to 137.8 psi} in detection mode (300 seconds).

**After "DEF Injection Start"**

- DEF line pressure is more than 1,250 kPa {181.3 psi} for 5 sec.

**<Sample: Normal DEF Pressurizing Manner>**

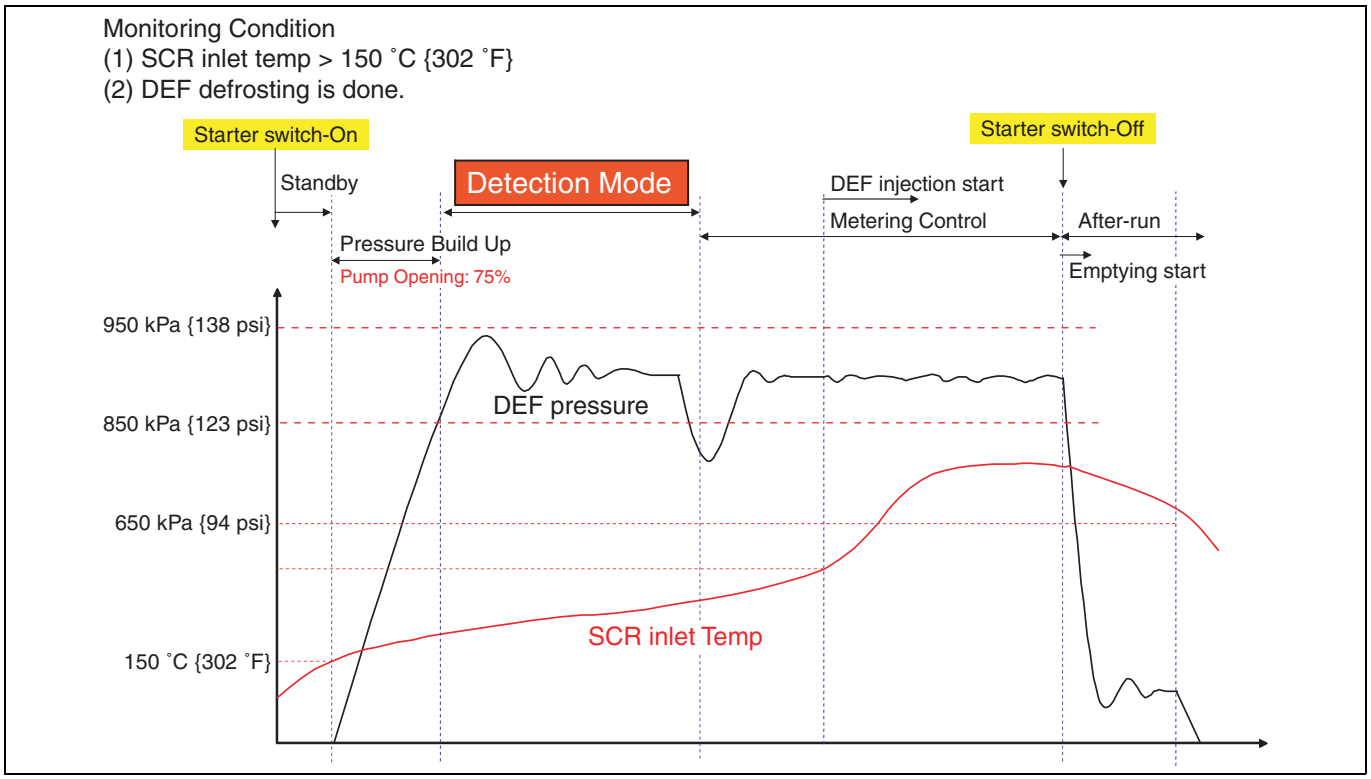


SAPH16F020400228

**3. Reset condition**

- After having restored to the normal conditions.

**4. Indication, warning or system control regulation when the DTC is set.**

- MIL: ON
- SCR malfunction light: ON
- DEF injection is stopped.
- NOx reduction quantity monitoring is aborted.
- If malfunction does not improve within 500 miles: engine output is restricted.
- If malfunction does not improve within 2,000 miles: vehicle speed is restricted.

**5. Symptoms on the vehicle when the DTC is set**

**<Symptoms on the vehicle due to backup control (fail safe function)>**

- NOx reduction function is prevented.
- Engine output is insufficient (when malfunction does not improve within 500 miles)
- Vehicle does not speed up (when malfunction does not improve within 2,000 miles)

**<Symptoms on the vehicle due to malfunction>**

- –

**6. Pre-inspection work**

- Check if the battery voltage is in the normal range.

**7. After-inspection work**

- Clear all past DTCs.
- Reset "Urea SCR related memory".
- Check if no DTC is stored after test drive.

**8. Estimated failure factors**

- DEF in the DEF tank is empty.
- Strainer in the DEF sensor is clogged.
- Air is entering into DEF suction line.
- DEF suction line is clogged (frozen), or DEF leaks from DEF suction line.
- DEF pump filter element is clogged.
- DEF pump inlet connector is clogged.
- DEF pump back flow connector is clogged.
- DEF back flow line is clogged.
- Leak from DEF pump.
- DEF pump malfunction.
- Clogged DEF tank breather hose.

**NOTICE**
**DEF -SCR system can be damaged by Diesel filling up to the tank.**
**If DEF pump main filter has a yellow slime, it is an evidence of biodiesel filled to the tank.**

## INSPECTION PROCEDURE: P20E9

| 1 | Check the DEF pressure ramping up curve |
|---|---|

1. Set the starter switch to the "LOCK" position.
2. Connect the vehicle to HINO DX II .
3. Set the starter switch to the "ON" position.
4. Select [Engine].
5. Select "DPR deposition quantity" from the customization items and change the PM deposition quantity to [3.0 g/L].
6. Exit from [Engine] and connect to [DCU] on HINO DX II menu.
7. Select [DEF pump pressure] in [Data monitor Setting] and read (record) the data (values) during DPR manual regeneration. (Start the monitor and then push the DPR manual regeneration button.)
8. After Manual regeneration completed, stop monitoring and save the data.
9. Make a graph for collected DEF pressure and check the condition with reference to the sample graph.

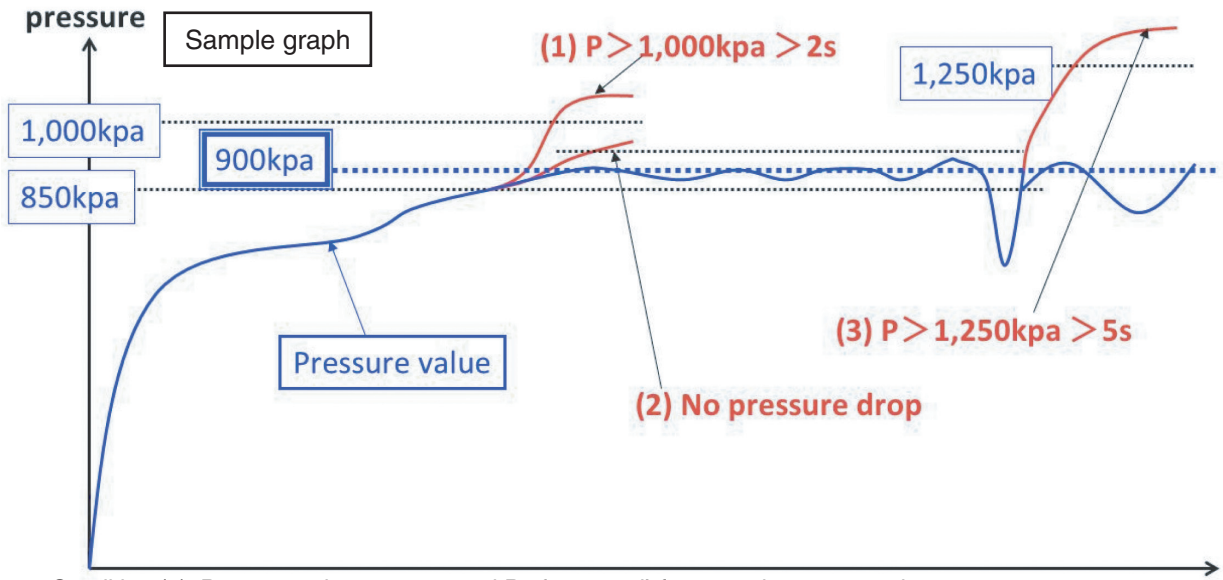


Condition (1): Pressure raises over 1,000 kPa {145.0 psi} for more than 2 seconds.
Condition (2): Pressure raises up and not dropped.
Condition (3): Pressure raises over 1,250 kPa {181.3 psi} for more than 5 seconds.

SAPH16F020400229

**Is the condition (1), (2) or (3) found in the corrected data?**

**YES**

**Go to step 2.**

**NO**

**Go to diagnosis procedure for the DTC P20E8.**

| 2 | Inspect the DEF backflow line. |
|---|---|

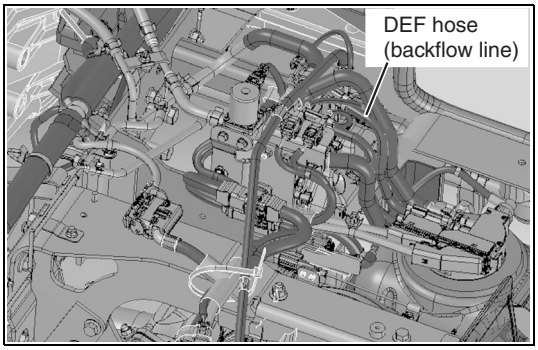


SAPH16F020400230

1. Set the starter switch to the "LOCK" position.
2. Disconnect the DEF hose (backflow line) between the DEF tank and the DEF pump.
3. Blow air from upstream side (DEF pump side) of the DEF hose and check if the hose is clogged.
4. Remove the DEF pick-up unit (DEF sensor) from the DEF tank.
5. Blow air from upstream side (DEF hose side) of the DEF connector on the DEF sensor and check if the connector/pipe is clogged.

**Was any failure found?**

**YES**

**Repair or replace the faulty part.**
**And then perform same test with step 1.**
**If the result is OK (pressure curve is normal behavior), the unit can be released after DEF tank breather hose cleaning.**
**Perform "After-inspection work" of INFORMATION section.**
**If the result is not OK (condition (1),(2) or (3) was found.), go to step 3.**

**NO**

**Go to step 3.**

| 3 | Inspect the DEF backflow line |
|---|---|

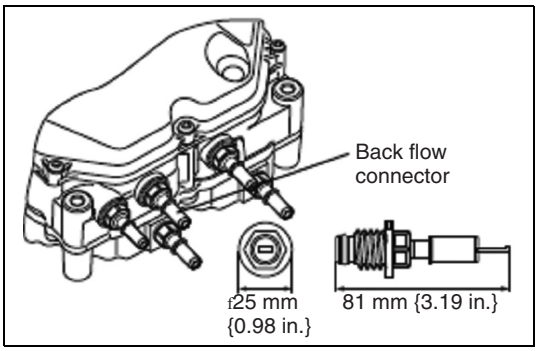


SAPH16F020400231

1. Replace the DEF pump backflow connector to new one, then perform same test with step 1 again.

**Tightening torque for connector:**
**4.0 – 5.0 N·m {41 – 51 kgf·cm, 3.0 – 3.6 lbf·ft}**

**Is the condition (1), (2) or (3) found in the corrected data?**

**YES**

**Go to diagnosis procedure for the DTC P20E8.**

**NO**

**Procedure completed. The unit can be released after DEF tank breather hose cleaning.**
**Perform "After-inspection work" of INFORMATION section.**

# DTC: P20F4

EN01H16F02040F03001060

## DTC: P20F4 DEF injector abnormal

INFORMATION

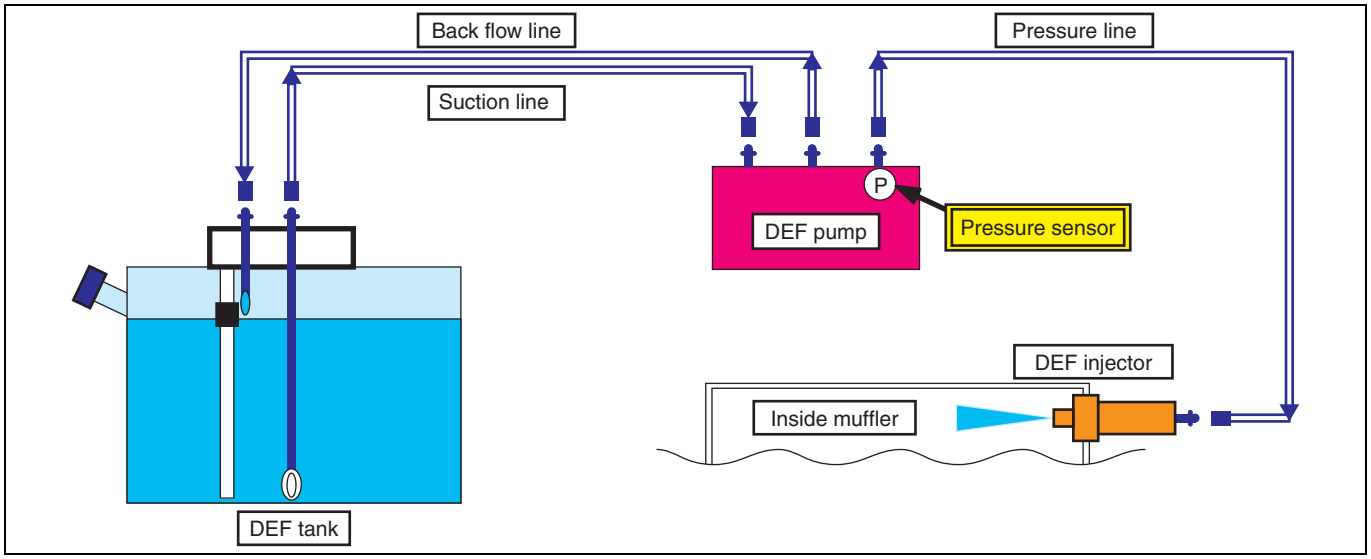


SAPH16F020400232

**1. Technical description**

- The amount of added DEF is diagnosed as abnormal.
- The amount of added DEF is controlled by the DEF pressure and the opening of the DEF injector.

**<Description of malfunction>**

- Failure of DEF injector during system operation is detected.

**2. DTC set condition**

(1) DTC detection condition
<During system operation>
DEF injector duty is > 15%
Accumulated DEF injector duty is > 25,000
Ratio (= Accumulated DEF pump duty/ Accumulated DEF injector duty) is < 0.12

(2) Judgement criteria
<At system running>
Pressure line check start: DEF pump speed: keep and DEF injector: full open
If DEF pressure is > 750 kPa {109 psi} after 4 sec. from DEF injector open.
DTC is detected.

**3. Reset condition.**

- After having restored to the normal conditions.

**4. Indication, warning or system control regulation when the DTC is set.**

- MIL: ON
- SCR malfunction light: ON
- DEF injection is stopped.
- NOx reduction quantity monitoring is aborted.
- Output restricted instantaneously.
- If malfunction does not improve within 50 min.: vehicle speed is restricted.

**5. Symptoms on the vehicle when the DTC is set**

**<Symptoms on the vehicle due to backup control (fail safe function)>**

- Exhaust gas purification function is declined.
- Engine output is insufficient.
- Vehicle does not speed up (when malfunction does not improve within 50 min.).

**<Symptoms on the vehicle due to malfunction>**

- –

**6. Pre-inspection work**

- Check if the battery voltage is in the normal range.

**7. After-inspection work**

- Clear all past DTCs.
- Check if no DTC is stored after test drive.

**8. Estimated failure factors**

- Clogging of the DEF injector
- Clogging of the DEF pipe

## INSPECTION PROCEDURE: P20F4

| 1 | Inspect the DEF pipe (pump ↔ injector) |
|---|---|

1. Check the DEF pipe (pressure line) and check if there are no disconnections, clogging, corrosion, or cracks.

**Was any failure found?**

**YES**

**Replace the DEF pipe.**
**Perform "After-inspection work" of INFORMATION section.**

**NO**

**Go to step 2.**

| 2 | Inspect DEF injector 1 [HINO DX II ] |
|---|---|

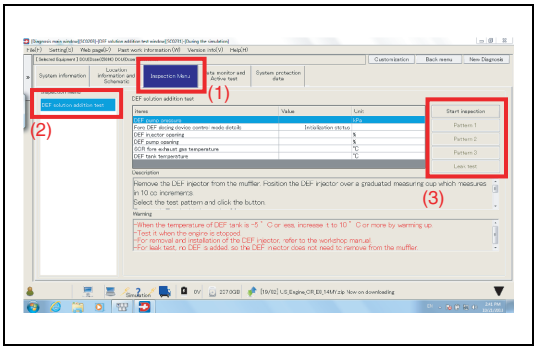


SAPH16F020400233

**NOTICE**
**Prepare a beaker or similar, plus a larger measuring vessel for measuring the DEF to be injected, before perform this inspection. (If the vessel is small, there is dispersion at the time of injection from the injector, and the measuring quantity decreases.)**

1. Set the starter switch to the "LOCK" position.

2. Remove the DEF injector from the muffler.

**HINT**
**Refer to the workshop manual "SELECTIVE CATALYTIC REDUCTION (SCR)" in the chapter "EMISSION CONTROL (J08E)" (S5-CJ08E14* or S5-UJ08E14*) for removal and installation of the DEF injector.**

3. Connect the vehicle to HINO DX II .

4. Set the starter switch to the "ON" position.

5. Select [DCU].

6. Select [Inspection Menu] on HINO DX II menu and check the operation of the DEF injector.
   <Inspection procedure>
   (1) Select [Inspection Menu].
   (2) Select [DEF solution addition test].
   (3) Perform addition test as instructed on the HINO DX II screen. (Perform all three patterns)

**NOTICE**
**When the DEF tank temperature is -5 °C (23 °F) or lower, perform warm-up to raise it to 10 °C (50 °F) or higher.**

**Is operation normal?**

YES

**Procedure completed. DEF crystal clogging is considered resolved.**
**Perform "After-inspection work" of INFORMATION section.**

NO

**Go to step 3.**

| 3 | **Inspect the DEF injector 2 [HINO DX ll ]** |
|---|---|

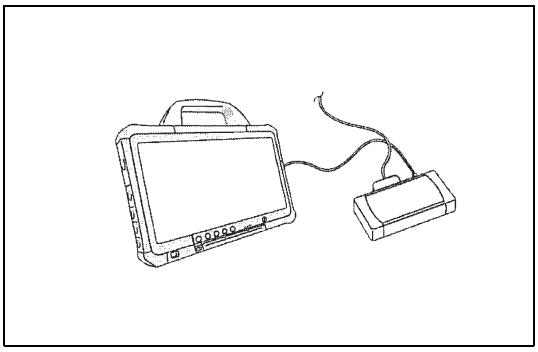

SAPH16F020400234

1. Set the starter switch to the "LOCK" position.
2. Replace DEF injector with a new one. (Do not install it on the muffler.)
3. Set the starter switch to the "ON" position.
4. Perform DEF addition test as same as step 2.

**Is operation normal?**

YES

**New the DEF injector installed in the muffler. Procedure completed. After installing the injector, idle the engine (for about 10 min.) and from the menu [Data monitor Setting] check if the DEF is stable between 800 kPa {116 psi} and 1,051 kPa {152 psi}.**
**Perform "After-inspection work" of INFORMATION section.**

NO

**Re-install the DEF injector and replace the DEF pipe (pressure line). After replacing the pipe, idle the engine (for about 10 min.) and from the menu [Data monitor Setting] check if the DEF is stable between 800 kPa {116 psi} and 1,051 kPa {152 psi}.**
**Perform "After-inspection work" of INFORMATION section.**

# DTC: P21C2

EN01H16F02040F03001061

## DTC: P21C2 DEF heater relay failure (Open load)

INFORMATION

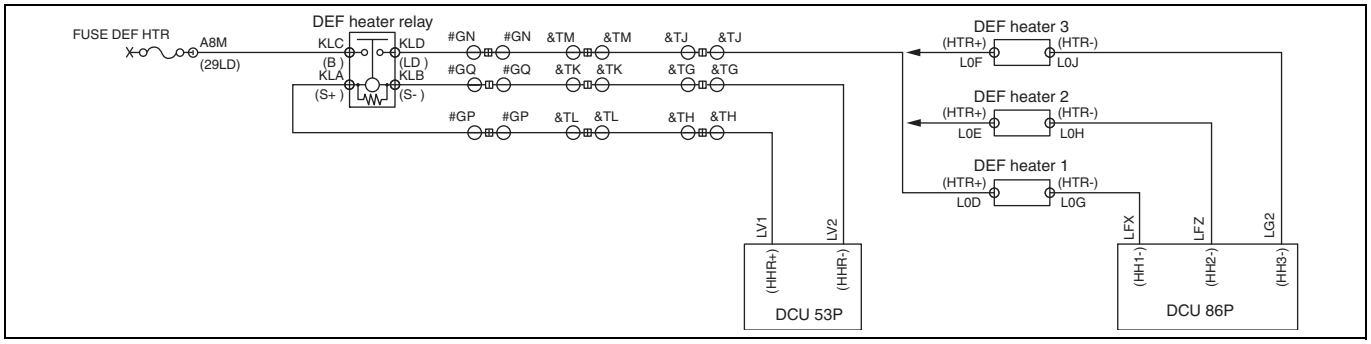


SAPH16F020400235

**1. Technical description**

- Electrify the DEF heater to prevent the freezing of DEF pipings.
- DCU detects harness disconnection based on the DEF heater circuit voltage.

**<Description of malfunction>**

- Malfunction of DEF heater relay is detected.

**2. DTC set condition**

(1) DTC detection condition
Starter switch ON.
DEF heater relay is in active condition.

(2) Judgement criteria
DEF heater relay voltage more than 2.7 V and less than 5 V.

**3. Reset condition**

- After having restored to the normal conditions.

**4. Indication, warning or system control regulation when the DTC is set.**

- MIL: ON
- SCR malfunction light: ON
- "SCR malfunction" appears on the multi-information.
- If malfunction does not improve within 500 miles: engine output is restricted.
- If malfunction does not improve within 2,000 miles: vehicle speed is restricted.

**5. Symptoms on the vehicle when the DTC is set**

**<Symptoms on the vehicle due to backup control (fail safe function)>**

- Engine output is insufficient (when malfunction does not improve within 500 miles).
- Vehicle does not speed up (when malfunction does not improve within 2,000 miles).

**<Symptoms on the vehicle due to malfunction>**

- Deterioration of the function to prevent the freezing of DEF pipings.

**6. Pre-inspection work**

- Check if the battery voltage is in the normal range.

**7. After-inspection work**

- Clear all past DTCs.
  (Also clear DTC P204F (DEF SCR system failure) of the engine ECU side.)
- Check if no DTC is stored after test drive.

**8. Estimated failure factors**

- Harness disconnection
- DEF heater relay malfunction

## INSPECTION PROCEDURE: P21C2

| 1 | Inspect the DEF heater relay |
|---|---|

1. Check the connection of the DEF heater relay (inside cab) (Looseness or poor contact).

**Was any failure found?**

**YES**

**Connect securely, repair if needed.**
**Perform "After-inspection work" of INFORMATION section.**

**NO**

**Go to step 2.**

| 2 | Inspect the DEF heater relay unit |
|---|---|

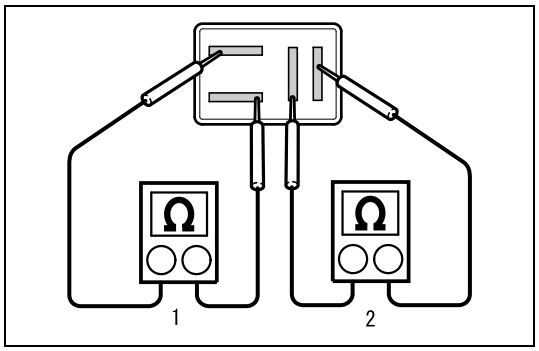


SAPH16F020400236

1. Set the starter switch to the "LOCK" position.
2. Disconnect the DEF heater relay.
3. Use the electrical tester to measure the resistance between the terminals of the DEF heater relay.

| Tester connections | Standard values |
|---|---|
| DEF heater relay terminals | 1 in the figure: 320 Ω<br>2 in the figure: ∞ Ω |

**Do the measurements meet the standard value?**

**YES**

**Go to step 3.**

**NO**

**Replace the DEF heater relay.**
**Perform "After-inspection work" of INFORMATION section.**

| 3 | Inspect the DEF heater relay power supply circuit |
|---|---|

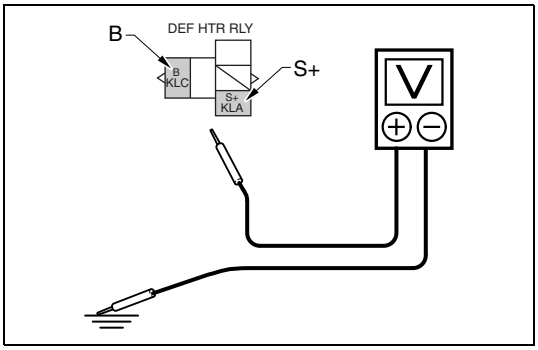


SAPH16F020400237

1. Set the starter switch to the "ON" position.

2. Use the electrical tester to measure the voltage between each terminal in the DEF heater relay vehicle-side connector (inside the cab) and ground.

| Measurement conditions | Tester connections | Standard values |
|---|---|---|
| **Starter switch: ON<br>Disconnect DEF heater relay** | **DEF heater relay vehicle-side connector<br>B – Ground<br>S+ – Ground** | **10 V or more** |

**Do the measurements meet the standard value?**

**YES**

**Go to step 4.**

**NO**

**Repair or replace the DEF heater relay power supply circuit.**
**Perform "After-inspection work" of INFORMATION section.**

| 4 | Check the harness between the DEF heater relay and the DCU |
|---|---|

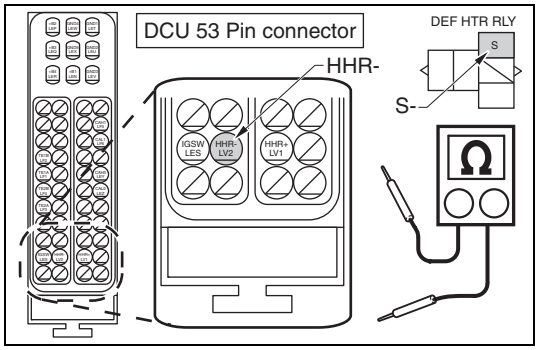

SAPH16F020400238

1. Set the starter switch to the "LOCK" position.
2. Disconnect the DCU 53P connector.
3. Use the electrical tester to measure the continuity between the terminals of the DEF heater relay vehicle-side connector (inside the cab) and the terminals of the DCU 53P connector.

| Measurement conditions | Tester connections | Standard values |
|---|---|---|
| **Starter switch: LOCK<br>Disconnect DEF heater relay<br>Disconnect DCU 53P connector** | **DEF heater relay vehicle-side connector – DCU 53P vehicle-side connector<br>S- – HHR-** | **Continue** |

**Do the measurements meet the standard value?**

**YES**

**Replace the DCU.**
**Perform "After-inspection work" of INFORMATION section.**

**NO**

**Repair or replace the harness.**
**Perform "After-inspection work" of INFORMATION section.**

# DTC: P21C3

EN01H16F02040F03001062

## DTC: P21C3 DEF heater relay failure (Low)

INFORMATION

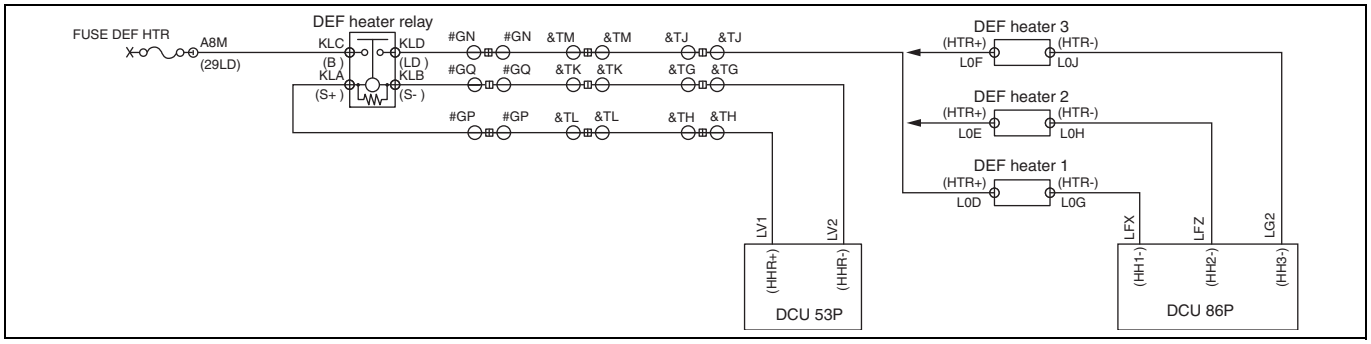


SAPH16F020400239

**1. Technical description**

- Electrify the DEF heater relay to prevent the freezing of DEF pipings.
- DCU detects DEF heater relay failure (low) based on the DEF heater circuit voltage.

**<Description of malfunction>**

- Malfunction of DEF heater relay is detected.

**2. DTC set condition**

(1) DTC detection condition
Starter switch ON.

(2) Judgement criteria
DEF heater relay circuit voltage is less than 0.66 V.

**3. Reset condition**

- After having restored to the normal conditions.

**4. Indication, warning or system control regulation when the DTC is set.**

- MIL: ON
- SCR malfunction light: ON

**5. Symptoms on the vehicle when the DTC is set**

**<Symptoms on the vehicle due to backup control (fail safe function)>**

- -

**<Symptoms on the vehicle due to malfunction>**

- Deterioration of the function to prevent the freezing of DEF pipings.

**6. Pre-inspection work**

- Check if the battery voltage is in the normal range.

**7. After-inspection work**

- Clear all past DTCs.
(Also clear DTC P204F (DEF SCR system failure) of the engine ECU side.)
- Check if no DTC is stored after test drive.

**8. Estimated failure factors**

- Harness short-circuit of GND
- DEF heater relay malfunction

## INSPECTION PROCEDURE: P21C3

| 1 | Inspect the DEF heater relay |
|---|---|

1. Check the connection of the DEF heater relay (inside cab) (Looseness or poor contact).

**Was any failure found?**

**YES**

**Connect securely, repair if needed.**
**Perform "After-inspection work" of INFORMATION section.**

**NO**

**Go to step 2.**

| 2 | Inspect the DEF heater relay unit |
|---|---|

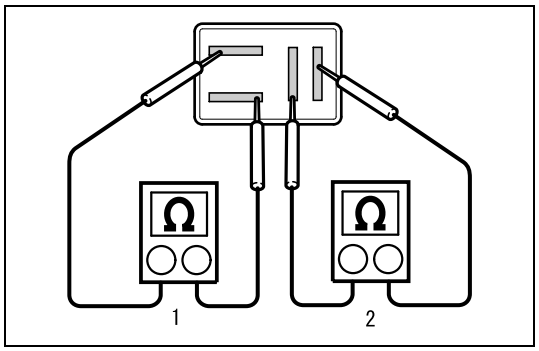


SAPH16F020400240

1. Set the starter switch to the "LOCK" position.
2. Disconnect the DEF heater relay.
3. Use the electrical tester to measure the resistance between the terminals of the DEF heater relay.

| Tester connections | Standard values |
|---|---|
| DEF heater relay terminals | 1 in the figure: 320 Ω<br>2 in the figure: ∞ Ω |

**Do the measurements meet the standard value?**

**YES**

**Go to step 3.**

**NO**

**Replace the DEF heater relay.**
**Perform "After-inspection work" of INFORMATION section.**

| 3 | Inspect the DEF heater relay power supply circuit |
|---|---|

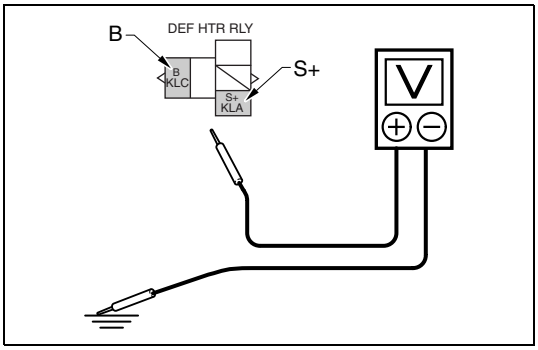


SAPH16F020400241

1. Set the starter switch to the "ON" position.

2. Use the electrical tester to measure the voltage between each terminal in the DEF heater relay vehicle-side connector (inside the cab) and ground.

| Measurement conditions | Tester connections | Standard values |
|---|---|---|
| **Starter switch: ON<br>Disconnect DEF heater relay** | **DEF heater relay vehicle-side connector<br>B – Ground<br>S+ – Ground** | **10 V or more** |

**Do the measurements meet the standard value?**

**YES**

**Go to step 4.**

**NO**

**Repair or replace the DEF heater relay power supply circuit.**
**Perform "After-inspection work" of INFORMATION section.**

| 4 | Check the harness between the DEF heater relay and the DCU |
|---|---|

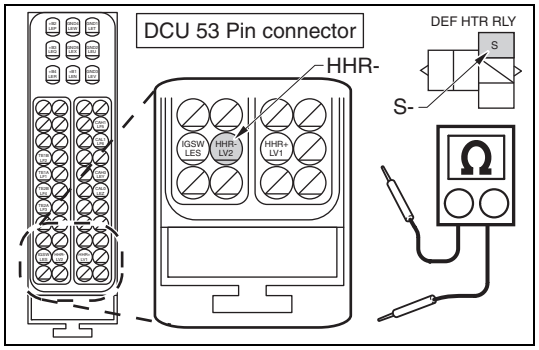


SAPH16F020400242

1. Set the starter switch to the "LOCK" position.
2. Disconnect the DEF heater relay.
3. Disconnect the DCU 53P connector.
4. Use the electrical tester to measure the continuity between the terminals of the DEF heater relay vehicle-side connector (inside the cab) and the terminals of the DCU 53P connector.

| Measurement conditions | Tester connections | Standard values |
|---|---|---|
| **Starter switch: LOCK<br>Disconnect DEF heater relay<br>Disconnect DCU 53P connector** | **DEF heater relay vehicle-side connector – DCU 53P vehicle-side connector<br>S- – HHR-** | **Continue** |

**Do the measurements meet the standard value?**

**YES**

**Replace the DCU.**
**Perform "After-inspection work" of INFORMATION section.**

**NO**

**Repair or replace the harness.**
**Perform "After-inspection work" of INFORMATION section.**

# DTC: P21C4

EN01H16F02040F03001063

## DTC: P21C4 DEF heater relay failure (High)

INFORMATION

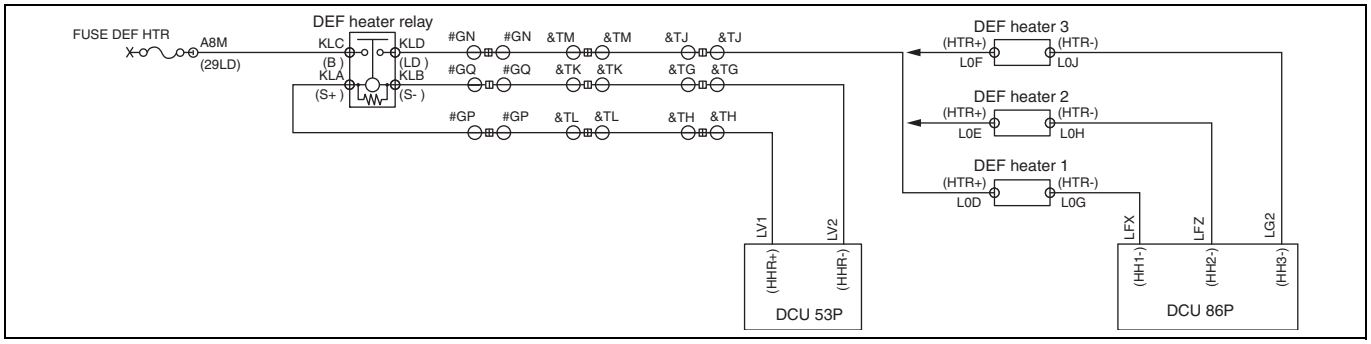


SAPH16F020400243

**1. Technical description**

- Electrify the DEF heater relay to prevent the freezing of DEF pipings.
- DCU detects +B short-circuit based on the DEF heater circuit voltage.

**<Description of malfunction>**

- Malfunction of DEF heater relay is detected.

**2. DTC set condition**

(1) DTC detection condition
Starter switch ON.

(2) Judgement criteria
DEF heater relay circuit voltage is less than 2.7 V.

**3. Reset condition**

- After having restored to the normal conditions.

**4. Indication, warning or system control regulation when the DTC is set.**

- MIL: ON
- SCR malfunction light: ON

**5. Symptoms on the vehicle when the DTC is set**

**<Symptoms on the vehicle due to backup control (fail safe function)>**

- -

**<Symptoms on the vehicle due to malfunction>**

- Deterioration of the function to prevent the freezing of DEF pipings.

**6. Pre-inspection work**

- Check if the battery voltage is in the normal range.

**7. After-inspection work**

- Clear all past DTCs.
(Also clear DTC P204F (DEF SCR system failure) of the engine ECU side.)
- Check if no DTC is stored after test drive.

**8. Estimated failure factors**

- Harness short-circuit
- DEF heater relay malfunction

## INSPECTION PROCEDURE: P21C4

| 1 | Inspect the DEF heater relay |
|---|---|

1. Check the connection of the DEF heater relay (inside cab) (Looseness or poor contact).

**Was any failure found?**

**YES**

**Connect securely, repair if needed.**
**Perform "After-inspection work" of INFORMATION section.**

**NO**

**Go to step 2.**

| 2 | Inspect the DEF heater relay unit |
|---|---|

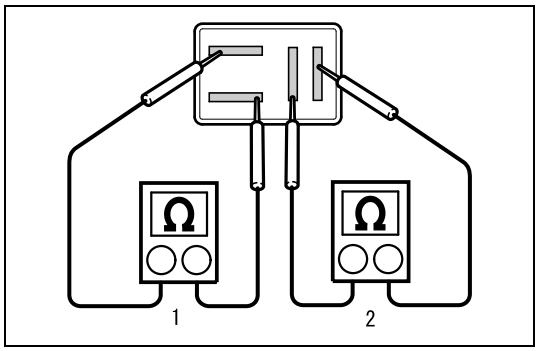


SAPH16F020400244

1. Set the starter switch to the "LOCK" position.
2. Disconnect the DEF heater relay.
3. Use the electrical tester to measure the resistance between the terminals of the DEF heater relay.

| Tester connections | Standard values |
|---|---|
| DEF heater relay terminals | 1 in the figure: 320 Ω<br>2 in the figure: ∞ Ω |

**Do the measurements meet the standard value?**

**YES**

**Go to step 3.**

**NO**

**Replace the DEF heater relay.**
**Perform "After-inspection work" of INFORMATION section.**

| 3 | Inspect the DEF heater relay power supply circuit |
|---|---|

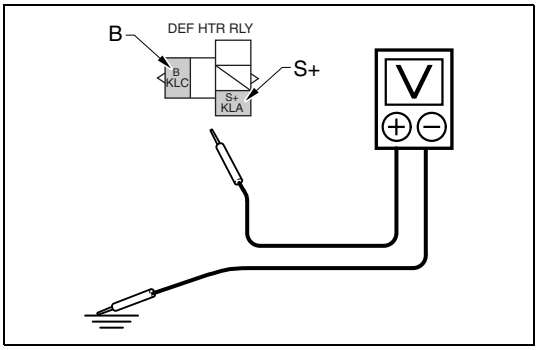


SAPH16F020400245

1. Set the starter switch to the "ON" position.

2. Use the electrical tester to measure the voltage between each terminal in the DEF heater relay vehicle-side connector (inside the cab) and ground.

| Measurement conditions | Tester connections | Standard values |
|---|---|---|
| **Starter switch: ON<br>Disconnect DEF heater relay** | **DEF heater relay vehicle-side connector<br>B – Ground<br>S+ – Ground** | **10 V or more** |

**Do the measurements meet the standard value?**

**YES**

**Go to step 4.**

**NO**

**Repair or replace the DEF heater relay power supply circuit.**
**Perform "After-inspection work" of INFORMATION section.**

| 4 | Check the harness between the DEF heater relay and the DCU |
|---|---|

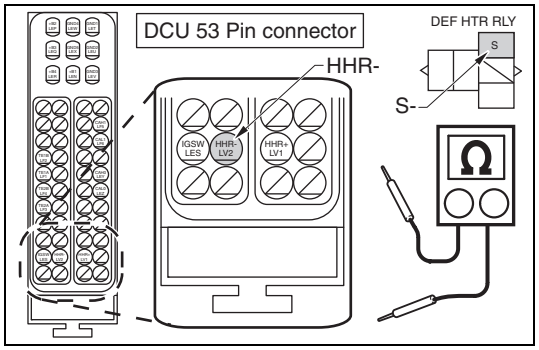


SAPH16F020400246

1. Set the starter switch to the "LOCK" position.
2. Disconnect the DEF heater relay.
3. Disconnect the DCU 53P connector.
4. Use the electrical tester to measure the continuity between the terminals of the DEF heater relay vehicle-side connector (inside the cab) and the terminals of the DCU 53P connector.

| Measurement conditions | Tester connections | Standard values |
|---|---|---|
| **Starter switch: LOCK<br>Disconnect DEF heater relay<br>Disconnect DCU 53P connector** | **DEF heater relay vehicle-side connector – DCU 53P vehicle-side connector<br>S- – HHR-** | **Continue** |

**Do the measurements meet the standard value?**

**YES**

**Replace the DCU.**
**Perform "After-inspection work" of INFORMATION section.**

**NO**

**Repair or replace the harness.**
**Perform "After-inspection work" of INFORMATION section.**

# DTC: P2201

EN01H16F02040F03001064

## DTC: P2201 NOx sensor (SCR upstream) - Performance

INFORMATION

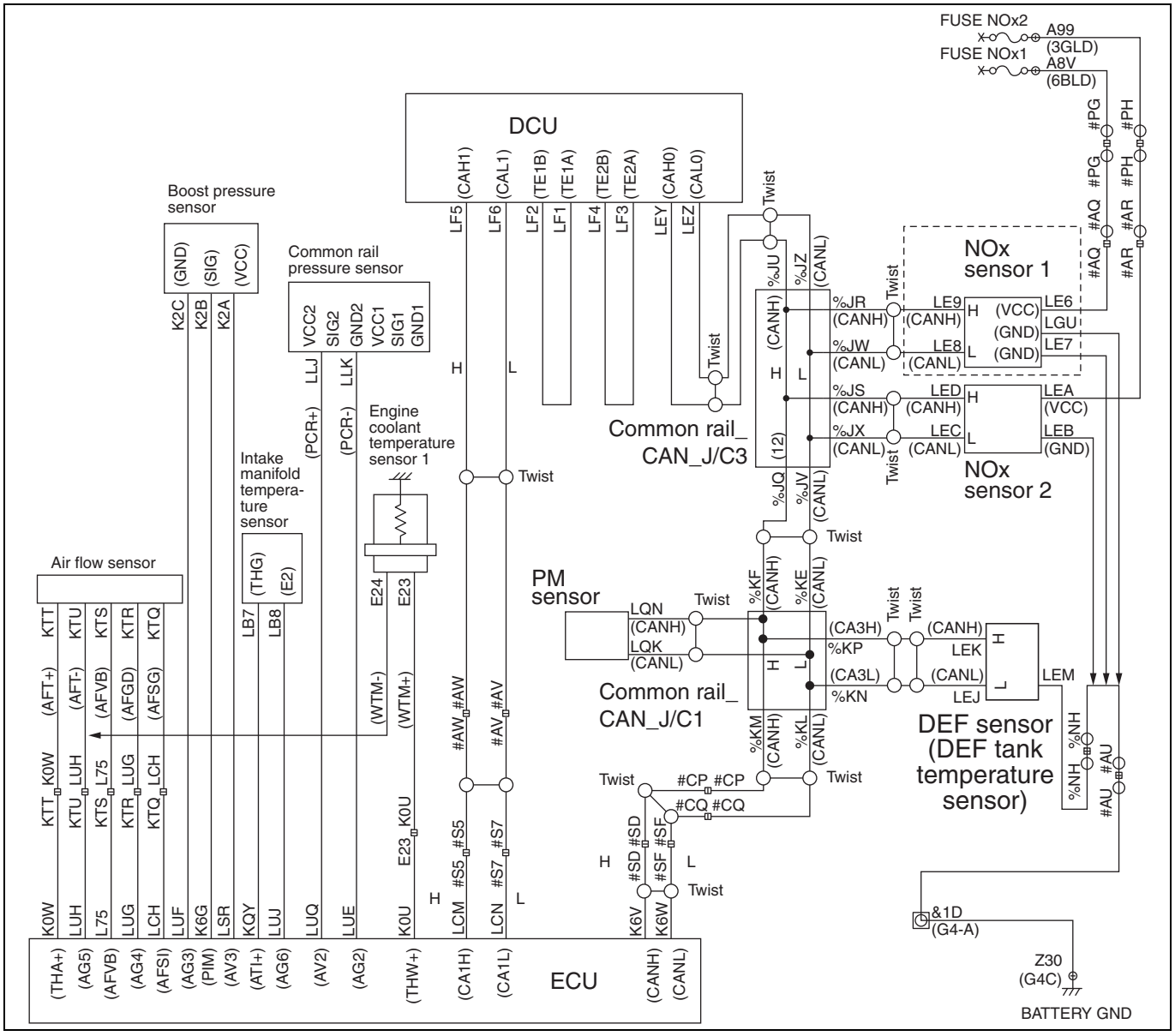


SAPH16F020400247

**1. Technical description**

- At low NOx concentration, NOx sensor 1 (SCR upstream) confirms correct value by comparing with the Judgement criteria.

**Description of malfunction**

- Characteristics failure of NOx sensor 1 (SCR upstream) is detected.

**2. DTC set condition**

(1) DTC detection condition
Conditions below continue for 10 sec.

- NOx sensor 1 (SCR upstream) is valid.
- 120°C {248°F} ≤ SCR catalyst temperature ≤ 170°C {338°F}
- DPR active regeneration not in process.
- (Estimated current $NH_3$ load in SCR - Nominal value of $NH_3$ load in SCR) ≤ 0 g
- 1000 r/min ≤ Engine speed ≤ 3000 r/min
- -0.5°C {32.9°F} ≤ΔSCR catalyst temperature ≤ 0.25°C {32.5°F}

Cumulative Exhaust gas mass flow from below condition set > 3000 g

- Fuel injection quantity ≤ 0 $mm^3$/st.

(2) Judgment criteria
When any of the following conditions is satisfied, and has continued for 5 seconds.

- Average actual NOx (from NOx sensor 1 (SCR upstream)) is above 40 ppm
- Average actual NOx (from NOx sensor 1 (SCR upstream)) is below -40 ppm

**3. Reset condition**

- After having restored to the normal conditions.

**4. Indication, warning or system control regulation when the DTC is set.**

- MIL: ON
- SVS Light: OFF
- DEF injection is stopped.
- NOx reduction quantity monitoring is aborted.

**5. Symptoms on the vehicle when the DTC is set**

**Symptoms on the vehicle due to backup control (fail safe function)**

- Exhaust gas purification function is declined.

**Symptoms on the vehicle due to malfunction**

- –

**6. Pre-inspection work**

- Check if the battery voltage is in the normal range.

**7. After-inspection work**

- Clear all past DTCs.
- After starting the DPR automatic regeneration, form the DTC detection condition.
- Check if no DTC is stored after test drive.

**8. Estimated failure factors**

- Harness disconnection or short-circuit
- Failure of NOx sensor 1 (SCR upstream)
- NOx sensor 2 (SCR downstream) failure
  - Sensor internal circuit failure
  - NOx sensor controller failure
- Failure of sensor used in calculating model value:
  - Air flow sensor
  - Boost pressure sensor
  - Intake manifold temperature sensor
  - Engine coolant temperature sensor
  - EGR failure

## INSPECTION PROCEDURE: P2201

Refer to the "ENGINE CONTROL SYSTEM (J08E)" in the chapter "ENGINE CONTROL SYSTEM".

# DTC: P2202

EN01H16F02040F03001065

## DTC: P2202 NOx sensor (SCR upstream) and Heater - Circuit

INFORMATION

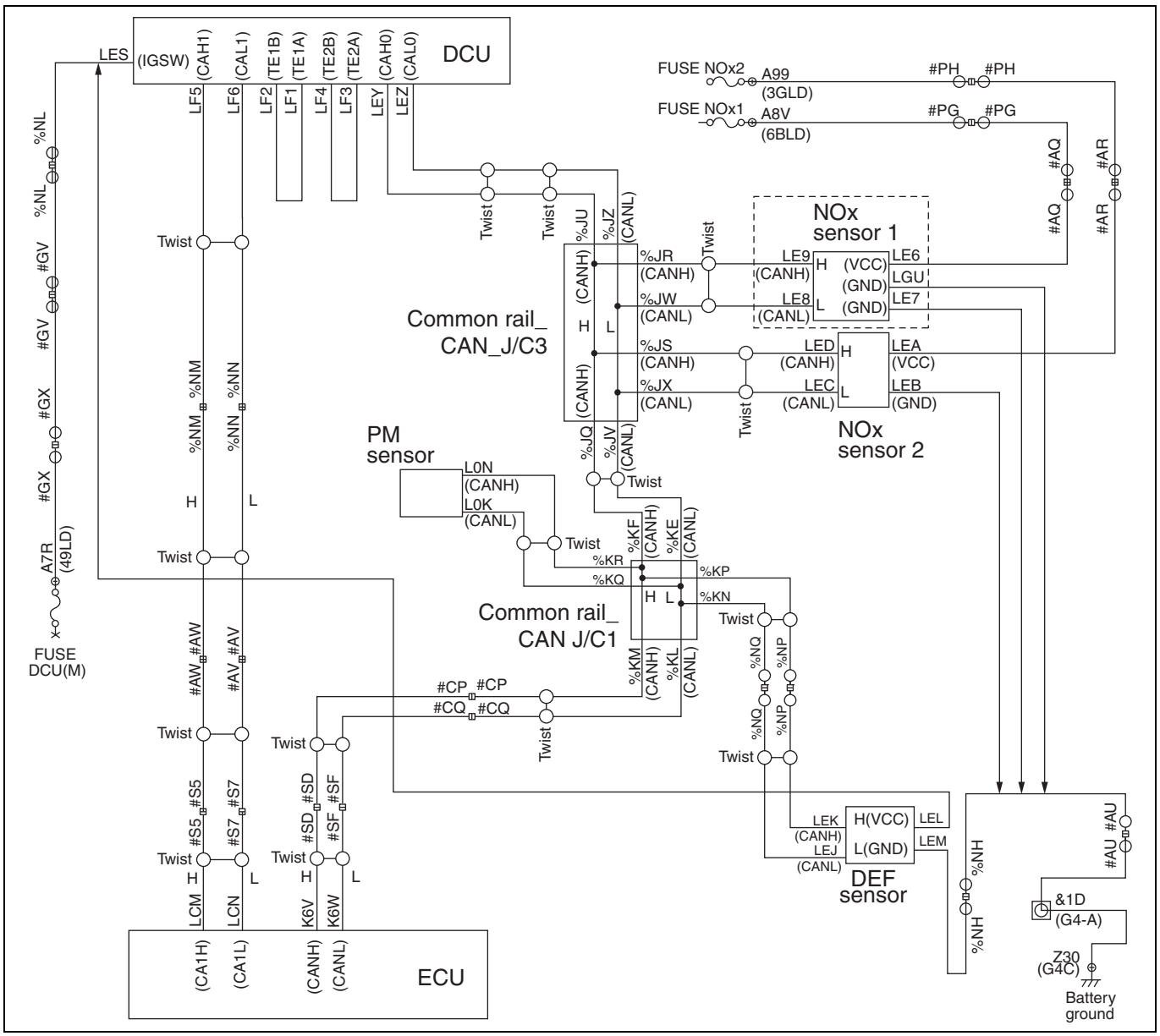


SAPH16F020400248

**1. Technical description**

- NOx sensor 1 (SCR upstream) is controlled by the NOx sensor controller.
- The NOx sensor controller is connected via the engine ECU and DCU through CAN communication, and it sends and receives data.

**<Description of malfunction>**

- Failure of circuit inside NOx sensor 1 (SCR upstream) is received from CAN data.

**2. DTC set condition**

(1) DTC detection condition
Starter switch ON.

(2) Judgement criteria
Failure of NOx sensor 1 (SCR upstream) internal circuit (Low failure flag) is received from CAN data.

**3. Reset condition**

- After having restored to the normal conditions.

**4. Indication, warning or system control regulation when the DTC is set.**

- MIL: ON
- DEF injection is stopped.
- NOx reduction quantity monitoring is aborted.

**5. Symptoms on the vehicle when the DTC is set**

**<Symptoms on the vehicle due to backup control (fail safe function)>**

- Exhaust gas purification function is declined.

**<Symptoms on the vehicle due to malfunction>**

- –

**6. Pre-inspection work**

- Check if the battery voltage is in the normal range.

**7. After-inspection work**

- Clear all past DTCs.
- Check if no DTC is stored after test drive.

**8. Estimated failure factors**

- Failure of NOx sensor 1 (SCR upstream)
  - Failure of circuit inside sensor
  - Failure of NOx sensor controller

## INSPECTION PROCEDURE: P2202

| 1 | Check the DTC detected (DCU) [HINO DX II ] |
|---|---|

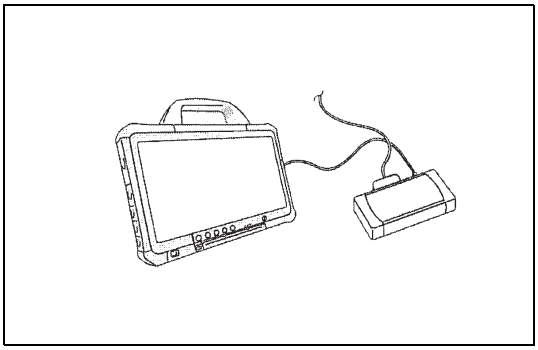

SAPH16F020400249

1. Connect the vehicle to HINO DX II .
2. Set the starter switch to the "ON" position.
3. Select [DCU] and check if a CAN communication system malfunction (U029D) has been detected.

**Has DTC U029D been detected?**

**YES**

**Go to the diagnostic procedure of a related DTC.**

**NO**

**Replace the NOx sensor 1 (SCR upstream). Perform "After-inspection work" of INFORMATION section.**

# DTC: P2203

EN01H16F02040F03001066

## DTC: P2203 SCR inlet NOx sensor failure (High)

INFORMATION

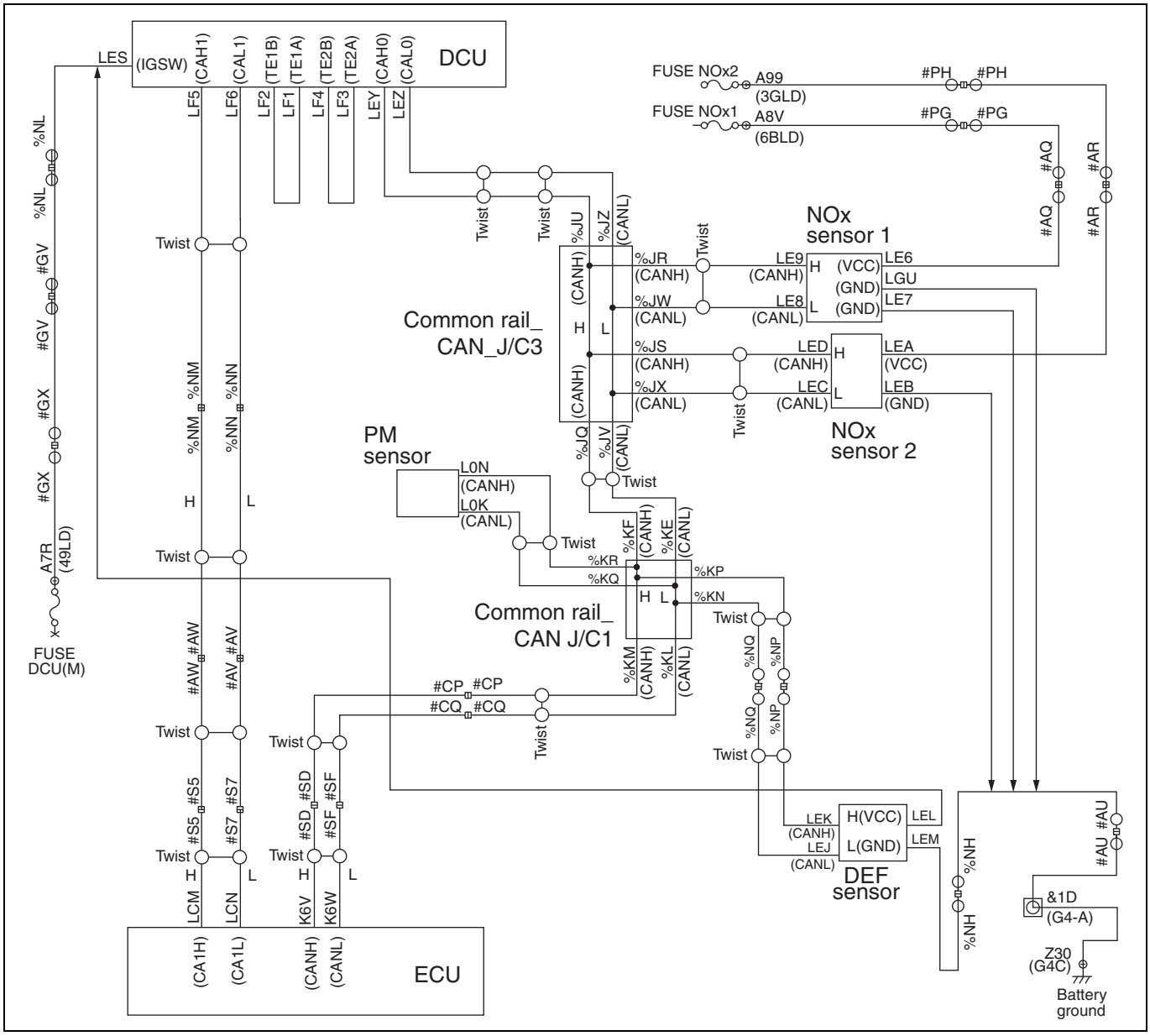


SAPH16F020400250

### 1. Technical description

- NOx sensor 1 (SCR upstream) is controlled by the NOx sensor controller.
- The NOx sensor controller is connected via the engine ECU and DCU through CAN communication, and it sends and receives data.

**<Description of malfunction>**

- Failure of NOx sensor 1 (SCR upstream) is received from CAN data.

### 2. DTC set condition

(1) DTC detection condition
Starter switch ON.

(2) Judgement criteria
Failure of NOx sensor 1 (SCR upstream) internal circuit (High failure flag) is received from CAN data.

**3. Reset condition**

- After having restored to the normal conditions.

**4. Indication, warning or system control regulation when the DTC is set.**

- MIL: ON
- DEF injection is stopped.
- NOx reduction quantity monitoring is aborted.

**5. Symptoms on the vehicle when the DTC is set**

**<Symptoms on the vehicle due to backup control (fail safe function)>**

- Exhaust gas purification function is declined.

**<Symptoms on the vehicle due to malfunction>**

- –

**6. Pre-inspection work**

- Check if the battery voltage is in the normal range.

**7. After-inspection work**

- Clear all past DTCs.
- Check if no DTC is stored after test drive.

**8. Estimated failure factors**

- Failure of NOx sensor 1 (SCR upstream)
  - Failure of circuit inside sensor
  - Failure of NOx sensor controller

## INSPECTION PROCEDURE: P2203

| 1 | Check the DTC detected (DCU) [HINO DX II ] |
|---|---|

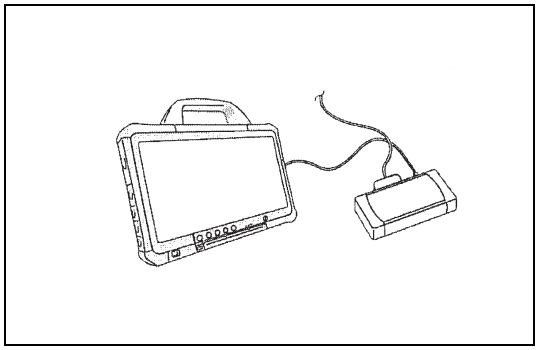

SAPH16F020400251

1. Connect the vehicle to HINO DX II .
2. Set the starter switch to the "ON" position.
3. Select [DCU] and check if a CAN communication system malfunction (U029D) has been detected.

**Has DTC U029D been detected?**

**YES**

**Go to the diagnostic procedure of a related DTC.**

**NO**

**Replace the NOx sensor 1 (SCR upstream). Perform "After-inspection work" of INFORMATION section.**

# DTC: P2204

EN01H16F02040F03001067

## DTC: P2204 SCR inlet NOx sensor abnormal

INFORMATION

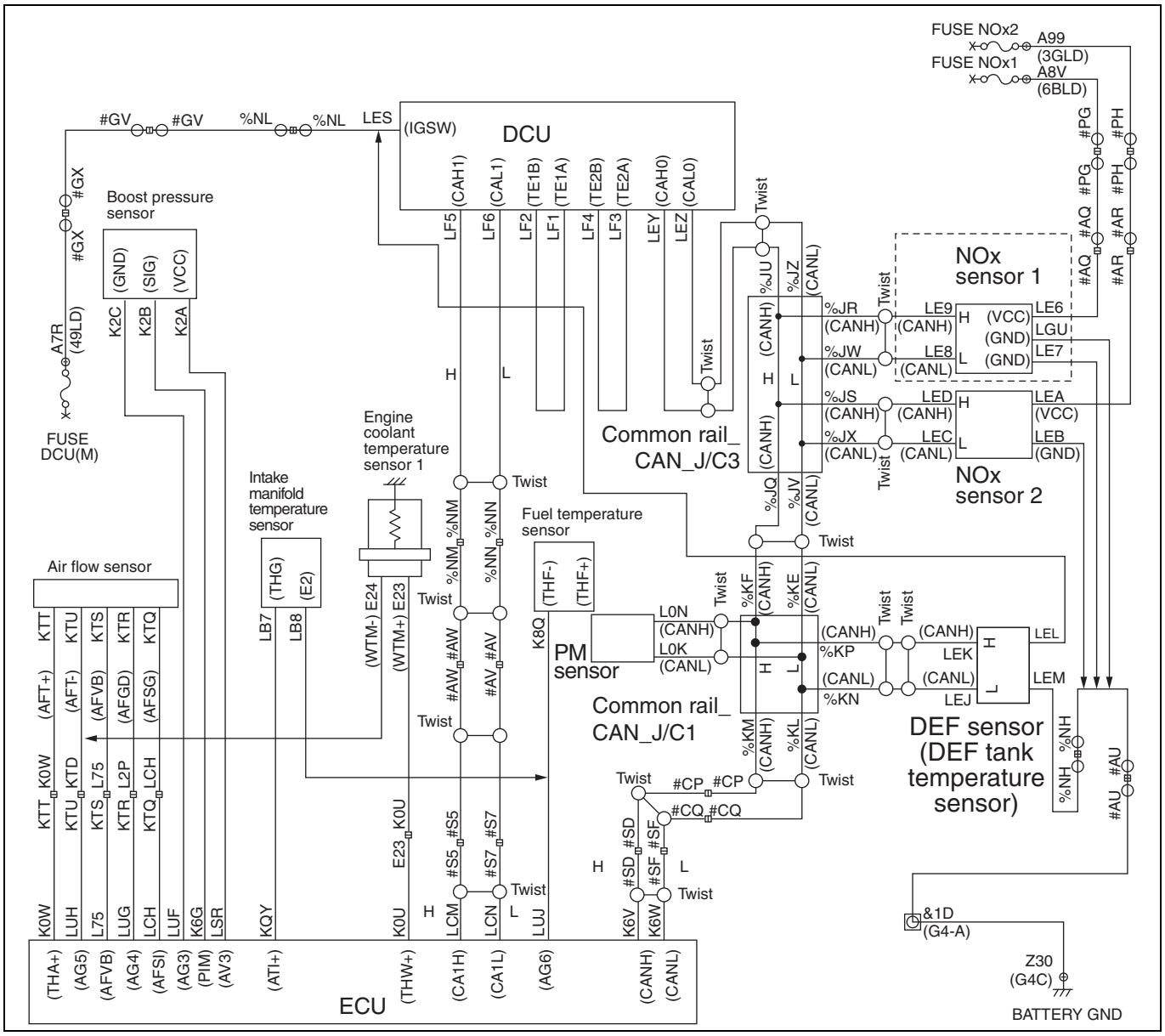


SAPH16F020400252

### 1. Technical description

- NOx sensor 1 (SCR upstream) is controlled by the NOx sensor controller.
- The NOx sensor controller is connected via the DCU and a harness, and it sends and receives data.

**<Description of malfunction>**

- Failure of NOx sensor 1 (SCR upstream) is detected.

**2. DTC set condition**

(1) DTC detection condition
Starter switch ON.
NOx sensor 1 (SCR upstream) is operating (after heat-up is completed).
Variation of fuel injection quantity (Engine) < 40 mg/cylinder.

(2) Judgement criteria
The NOx sensor status signal sent from the NOx sensor is invalid for at least 90 sec. in a 180 sec. interval.

**3. Reset condition**

- After having restored to the normal conditions.

**4. Indication, warning or system control regulation when the DTC is set.**

- MIL: ON
- DEF injection is stopped.
- NOx reduction quantity monitoring is aborted.

**5. Symptoms on the vehicle when the DTC is set**

**<Symptoms on the vehicle due to backup control (fail safe function)>**

- Exhaust gas purification function is declined.

**<Symptoms on the vehicle due to malfunction>**

- –

**6. Pre-inspection work**

- Check if the battery voltage is in the normal range.

**7. After-inspection work**

- Clear all past DTCs.
- Check if no DTC is stored after test drive.

**8. Estimated failure factors**

- Harness disconnection or short-circuit
- NOx sensor 1 (SCR upstream) malfunction

## INSPECTION PROCEDURE: P2204

| 1 | Check the DTC detected (DCU) [HINO DX II ] |
|---|---|

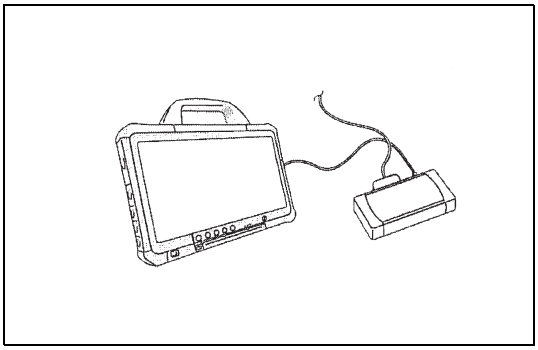

SAPH16F020400253

1. Set the starter switch to the "LOCK" position.
2. Connect the vehicle to HINO DX II .
3. Set the starter switch to the "ON" position.
4. Select [DCU] and check if any DTC other than P2204 (for example, P2202, P2203, P2209, U029D) has been detected.

**Has a DTC other than P2204 been detected?**

**YES**

**Go to diagnosis procedure of a related DTC.**

**NO**

**Go to step 2.**

| 2 | Inspect the NOx sensor 1 (SCR upstream) [HINO DX II ] |
|---|---|

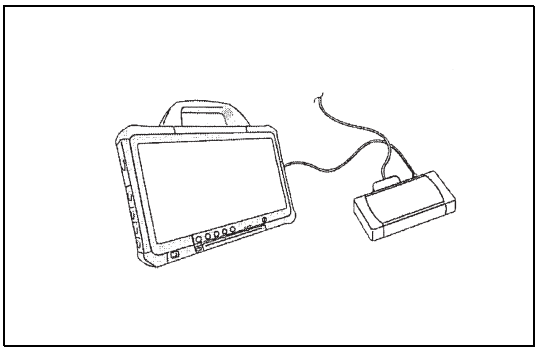

SAPH16F020400254

1. Set the starter switch to the "LOCK" position.
2. Disconnect the NOx sensor 1 (SCR upstream) and NOx sensor 2 (SCR downstream).
3. Install NOx sensors 1 and 2 in the vehicle, in their opposite location.
4. Set the starter switch to the "ON" position.
5. Erase the malfunction history using HINO DX II .
6. Perform the DPR forced regeneration.
7. Select [DCU] and check if P2204 has been detected.

**Has DTC P2204 been detected?**

**YES**

**Go to step 3.**

**NO**

**Replace the NOx sensor 1 (SCR upstream). Perform "After-inspection work" of INFORMATION section.**

| 3 | Inspect the engine coolant temperature sensor |
|---|---|

1. Check the installation of the engine coolant temperature sensor.
2. Make sure there is no dirt or damage to the engine coolant temperature sensor.

**Was any failure found?**

**YES**

**Clean the engine coolant temperature sensor and install it properly. If damaged, replace the engine coolant temperature sensor.**
**Perform "After-inspection work" of INFORMATION section.**

**NO**

**Go to step 4.**

| 4 | Check the engine coolant temperature sensor output signal [HINO DX II ] |
|---|---|

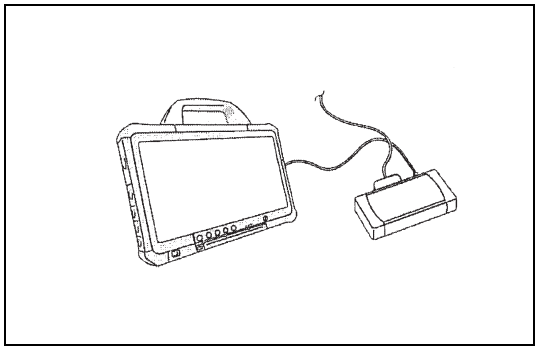

SAPH16F020400255

1. Set the starter switch to the "ON" position.
2. Select [Engine].
3. Select [Engine coolant temperature] from [Data monitor Setting] on the menu.
4. When the engine coolant temperature (actual measured value) is 50 °C {122 °F}, check if the temperature output by the engine coolant temperature sensor is 50 °C {122 °F}.

| Standard values |
|---|
| Coolant temperature sensor output value: 50 °C {122 °F} |

**Do the measurements meet the standard value?**

**YES**

**Go to step 5.**

**NO**

**Replace the engine coolant temperature sensor.**
**Perform "After-inspection work" of INFORMATION section.**

| 5 | Inspect the air flow sensor |
|---|---|

1. Check the installation of the air flow sensor.
2. Make sure there is no dirt or damage to the air flow sensor.

**Was any failure found?**

**YES**

**If dirt, clogging or damage in the sensing unit was found, replace the air flow sensor.**
**Perform "After-inspection work" of INFORMATION section.**

**NO**

**Go to step 6.**

| 6 | Inspect the boost pressure sensor |
|---|---|

1. Check the installation of the boost pressure sensor.
2. Make sure there is no dirt or damage to the boost pressure sensor.

**Was any failure found?**

**YES**

**If dirt, clogging or damage in the sensing unit was found, replace the boost pressure sensor.**
**Perform "After-inspection work" of INFORMATION section.**

**NO**

**Go to step 7.**

| 7 | Inspect the boost pressure sensor output signal [HINO DX II ] |
|---|---|

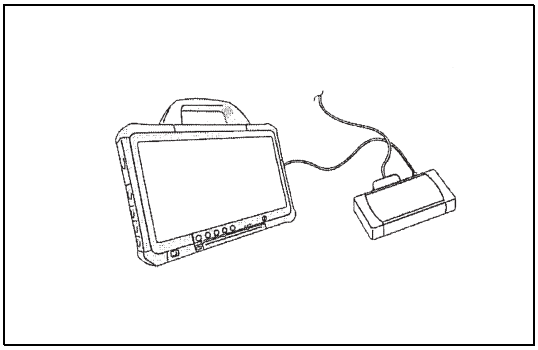

SAPH16F020400256

1. Start the engine.
2. Select [Engine] on the HINO DX II .
3. Select [Actual boost pressure] from [Data monitor Setting] on the menu.
4. Race the engine from idle to No-Load Maximum and check if the boost pressure output signal varies.

| Standard values |
|---|
| **Boost pressure sensor output value: There is no abnormal change in the sensor output signal. (The pressure sensor signal changes according to the engine speed)** |

**Do the measurements meet the standard value?**

YES

**Go to step 8.**

NO

**Replace the boost pressure sensor.**
**Perform "After-inspection work" of INFORMATION section.**

## 8 Inspect the Intake manifold temperature sensor

1. Check the installation of the intake manifold temperature sensor.
2. Make sure there is no dirt or damage to the intake manifold temperature sensor.

**Was any failure found?**

YES

**Clean the Intake manifold temperature sensor and install it properly. If damaged, replace the Intake manifold temperature sensor.**
**Perform "After-inspection work" of INFORMATION section.**

NO

**Go to step 9.**

## 9 Inspect the Intake manifold temperature sensor unit

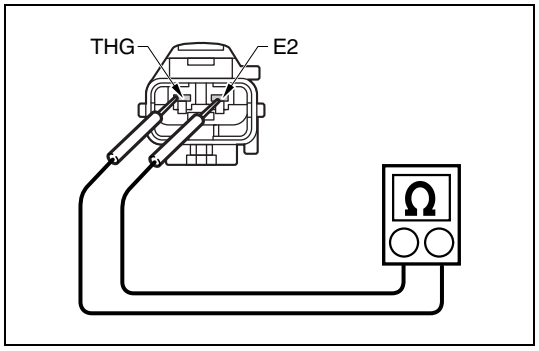

SAPH16F020400257

1. Set the starter switch to the "LOCK" position.
2. Disconnect the intake manifold temperature sensor connector.
3. Use the electrical tester to measure the resistance between the terminals of the intake manifold temperature sensor.

| Measurement conditions | Tester connections | Standard values |
|---|---|---|
| Starter switch: LOCK | Intake manifold temperature sensor THG – E2 | 20 °C {68 °F}: 7.336 – 5.794 kΩ<br>50 °C {122 °F}: 2.435 – 1.994 kΩ |

**Do the measurements meet the standard value?**

YES

**Go to step 10.**

NO

**Replace the intake manifold temperature sensor.**
**Perform "After-inspection work" of INFORMATION section.**

| 10 | Inspection of the NOx sensor 1 [HINO DX ll ] |
|---|---|

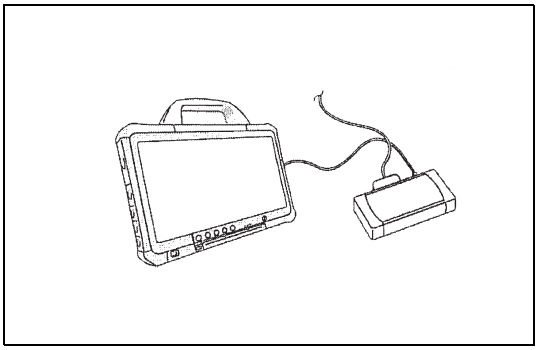

SAPH16F020400258

1. Replace NOx sensor 1 with a new sensor.
2. Set the starter switch to the "ON" position.
3. Select [DCU] and check if P2204 has been detected.

**Has DTC P2204 been detected?**

**YES**

**Replace the DCU.**
**Perform "After-inspection work" of INFORMATION section.**

**NO**

**NOx sensor 1 failure. Install a new NOx sensor 1.**
**Perform "After-inspection work" of INFORMATION section.**

# DTC: P2209

EN01H16F02040F03001068

## DTC: P2209 NOx sensor (SCR upstream) Heater Sense Circuit Range/Performance

INFORMATION

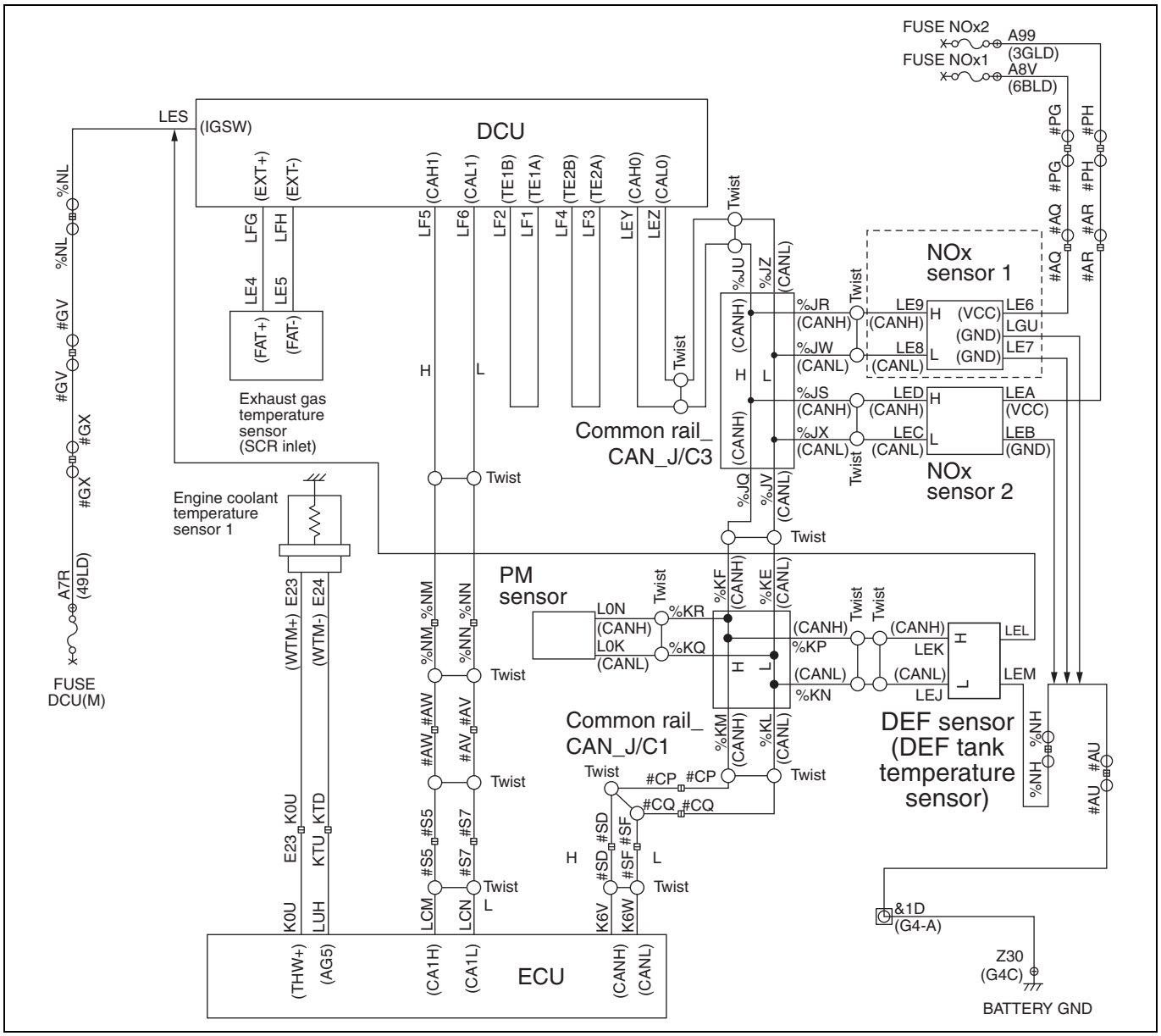


SAPH16F020400259

### 1. Technical description

- The NOx sensors are controlled by the NOx sensor controller.
- The NOx sensor controller is connected to the DCU via the harness for reception and transmission of information.

**<Description of malfunction>**

- Failure of NOx sensor 1 (SCR upstream) is detected.

**2. DTC set condition**

(1) DTC detection condition
Starter switch ON.
SCR catalyst downstream temperature (from exhaust gas temperature (SCR outlet)) ≥ 200 °C {392 °F}
Engine coolant temperature ≥ 70 °C {158 °F}

(2) Judgement criteria
A valid NOx reading cannot be taken by the NOx sensor when 180 sec. elapses after start of NOx sensor heater activation.

**3. Reset condition**

- After having restored to the normal conditions.

**4. Indication, warning or system control regulation when the DTC is set.**

- MIL: ON
- DEF injection is stopped.
- NOx reduction quantity monitoring is aborted.

**5. Symptoms on the vehicle when the DTC is set**

**<Symptoms on the vehicle due to backup control (fail safe function)>**

- Exhaust gas purification function is declined.

**6. Pre-inspection work**

- Check if the battery voltage is in the normal range.

**7. After-inspection work**

- Clear all past DTCs.
- Check if no DTC is stored after test drive.

**8. Estimated failure factors**

- Disconnection or short-circuit in sensor harness
- Malfunction of NOx sensor 1 (SCR upstream)
  - Malfunction of circuit in the sensor
  - Malfunction of NOx sensor controller

## INSPECTION PROCEDURE: P2209

| 1 | Inspect the NOx sensor 1 (SCR upstream) connector |
|---|---|

1. Check the connection of the NOx sensor (SCR upstream) connector (Looseness and poor contact).

**Was any failure found?**

**YES**

**Connect securely, repair if needed.**
**Perform "After-inspection work" of INFORMATION section.**

**NO**

**Go to step 2.**

| 2 | Inspect the NOx sensor 1 harness (CAN communication line) |
|---|---|

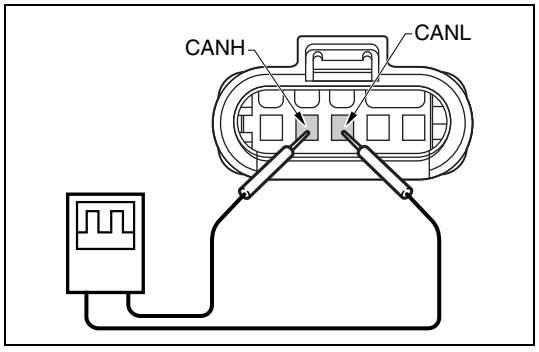


SAPH16F020400260

1. Set the starter switch to the "LOCK" position.
2. Disconnect the NOx sensor 1 connector.
3. Set the starter switch to the "ON" position.
4. Use the oscilloscope to measure the voltage between the terminals of the NOx sensor 1 vehicle-side connector.

| Measurement conditions | Tester connections | Standard values |
|---|---|---|
| Starter switch: ON | NOx sensor 1 vehicle-side connector<br>CANH – CANL | Pulse waveform<br>0 V to 5 V |

**Do the measurements meet the standard value?**

**YES**

**Go to step 3.**

**NO**

**Repair or replace the harness.**
**Perform "After-inspection work" of INFORMATION section.**

| 3 | Inspect the NOx sensor 1 harness (GND line) |
|---|---|

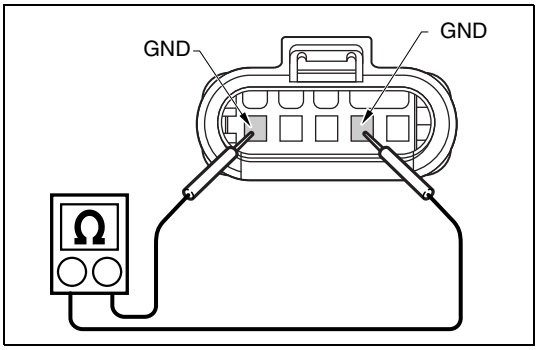

SAPH16F020400261

1. Set the starter switch to the "LOCK" position.
2. Use the electrical tester to measure the resistance between the terminals of the NOx sensor 1 vehicle-side connector.

| Measurement conditions | Tester connections | Standard values |
|---|---|---|
| Starter switch: LOCK | NOx sensor 1 vehicle-side connector<br>GND – GND | Continuity |

**Do the measurements meet the standard value?**

**YES**

**Go to step 4.**

**NO**

**Repair or replace the harness.**
**Perform "After-inspection work" of INFORMATION section.**

| 4 | Inspect the NOx sensor 1 harness (power supply line) |
|---|---|

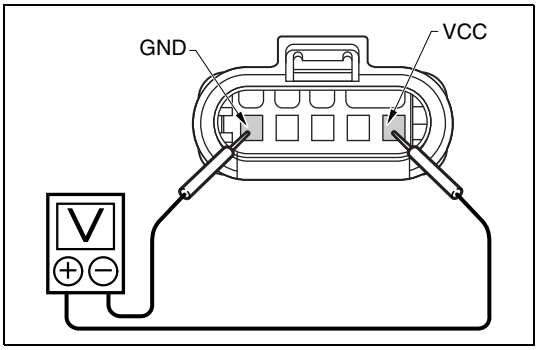

SAPH16F020400262

1. Set the starter switch to the "ON" position.
2. Use the electrical tester to measure the voltage between the terminals of the NOx sensor 1 vehicle-side connector.

| Measurement conditions | Tester connections | Standard values |
|---|---|---|
| Starter switch: ON | NOx sensor 1 vehicle-side connector<br>VCC – GND | 9 V to 16 V |

**Do the measurements meet the standard value?**

**YES**

**Go to step 5.**

**NO**

**Repair or replace the harness.**
**Perform "After-inspection work" of INFORMATION section.**

| 5 | Inspect the exhaust gas temperature sensor (SCR inlet) connector |
|---|---|

1. Check the connection of the exhaust gas temperature sensor (SCR inlet) connector (Looseness and poor contact).

**Was any failure found?**

**YES**

**Connect securely, repair if needed.**
**Perform "After-inspection work" of INFORMATION section.**

**NO**

**Go to step 6.**

| 6 | Inspect the exhaust gas temperature sensor (SCR inlet) |
|---|---|

1. Check the installation of the exhaust gas temperature sensor (SCR inlet).
2. Make sure there is no dirt or damage to the exhaust gas temperature sensor (SCR inlet).

**Was any failure found?**

**YES**

**Clean the exhaust gas temperature sensor (SCR inlet) and install it properly. If damaged, replace the exhaust gas temperature sensor (SCR inlet).**
**Perform "After-inspection work" of INFORMATION section.**

**NO**

**Go to step 7.**

| 7 | Inspect the exhaust gas temperature sensor (SCR inlet) unit |
|---|---|

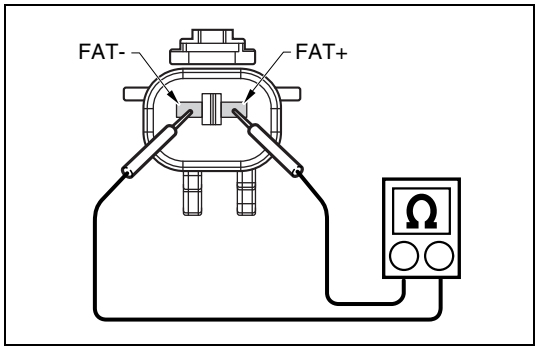


SAPH16F020400263

1. Set the starter switch to the "LOCK" position.
2. Disconnect the exhaust gas temperature sensor (SCR inlet) connector.
3. Use the electrical tester to measure the resistance between the terminals of the exhaust gas temperature sensor (SCR inlet).

| Measurement conditions | Tester connections | Standard values |
|---|---|---|
| **Starter switch: LOCK** | **Exhaust gas temperature sensor (SCR inlet) FAT+ – FAT-** | **20 °C {68 °F}: 220 Ω** |

**Do the measurements meet the standard value?**

| YES | NO |
|---|---|
| **Go to step 8.** | **Replace the exhaust gas temperature sensor (SCR inlet).**<br>**Perform "After-inspection work" of INFORMATION section.** |

## 8 Inspect the engine coolant temperature sensor connector

1. Check the connection of engine coolant temperature sensor connector (Looseness and poor contact).

**Was any failure found?**

| YES | NO |
|---|---|
| **Connect securely, repair if needed.**<br>**Perform "After-inspection work" of INFORMATION section.** | **Go to step 9.** |

## 9 Inspect the engine coolant temperature sensor

1. Check the installation of the engine coolant temperature sensor.
2. Make sure there is no dirt or damage to the engine coolant temperature sensor.

**Was any failure found?**

| YES | NO |
|---|---|
| **Clean the engine coolant temperature sensor and install it properly. If damaged, replace the engine coolant temperature sensor.**<br>**Perform "After-inspection work" of INFORMATION section.** | **Go to step 10.** |

| 10 | Inspect the engine coolant temperature sensor unit |
|---|---|

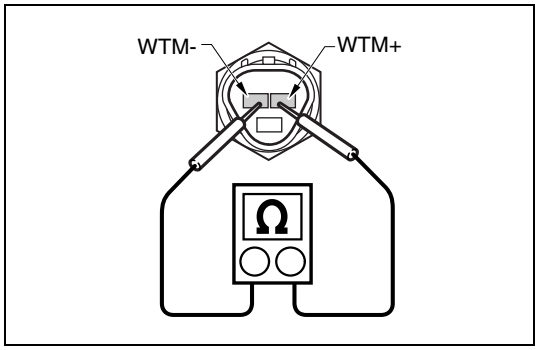

SAPH16F020400264

1. Disconnect the engine coolant temperature sensor connector.
2. Use the electrical tester to measure the resistance between the terminals of the engine coolant temperature sensor.

| Measurement conditions | Tester connections | Standard values |
|---|---|---|
| Starter switch: LOCK | Engine coolant temperature sensor WTM+ – WTM- | 20 °C {68 °F}: 2.32 – 2.59 kΩ<br>80 °C {176 °F}: 0.310 – 0.326 kΩ |

**Do the measurements meet the standard value?**

**YES**

**Go to step 11.**

**NO**

**Replace the engine coolant temperature sensor.**
**Perform "After-inspection work" of INFORMATION section.**

| 11 | Inspect the NOx sensor 1 [HINO DX II ] |
|---|---|

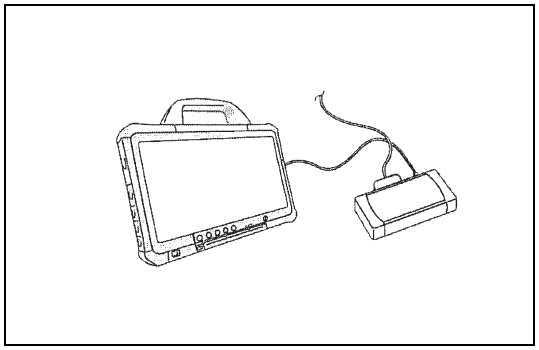
SAPH16F020400265

1. Set the starter switch to the "LOCK" position.
2. Replace a new NOx sensor 1.
3. Connect the vehicle to HINO DX II .
4. Set the starter switch to the "ON" position.
5. Erase the malfunction history and perform a DPR forced regeneration.
6. Select [DCU] and check if P2209 has been detected.

**Has DTC other than P2209 been detected?**

**YES**

**Replace the DCU.**
**Perform "After-inspection work" of INFORMATION section.**

**NO**

**Procedure completed.**
**Perform "After-inspection work" of INFORMATION section.**

# DTC: P229F

EN01H16F02040F03001069

## P229F: NOx sensor (SCR downstream) - Performance and Monitoring capability

INFORMATION

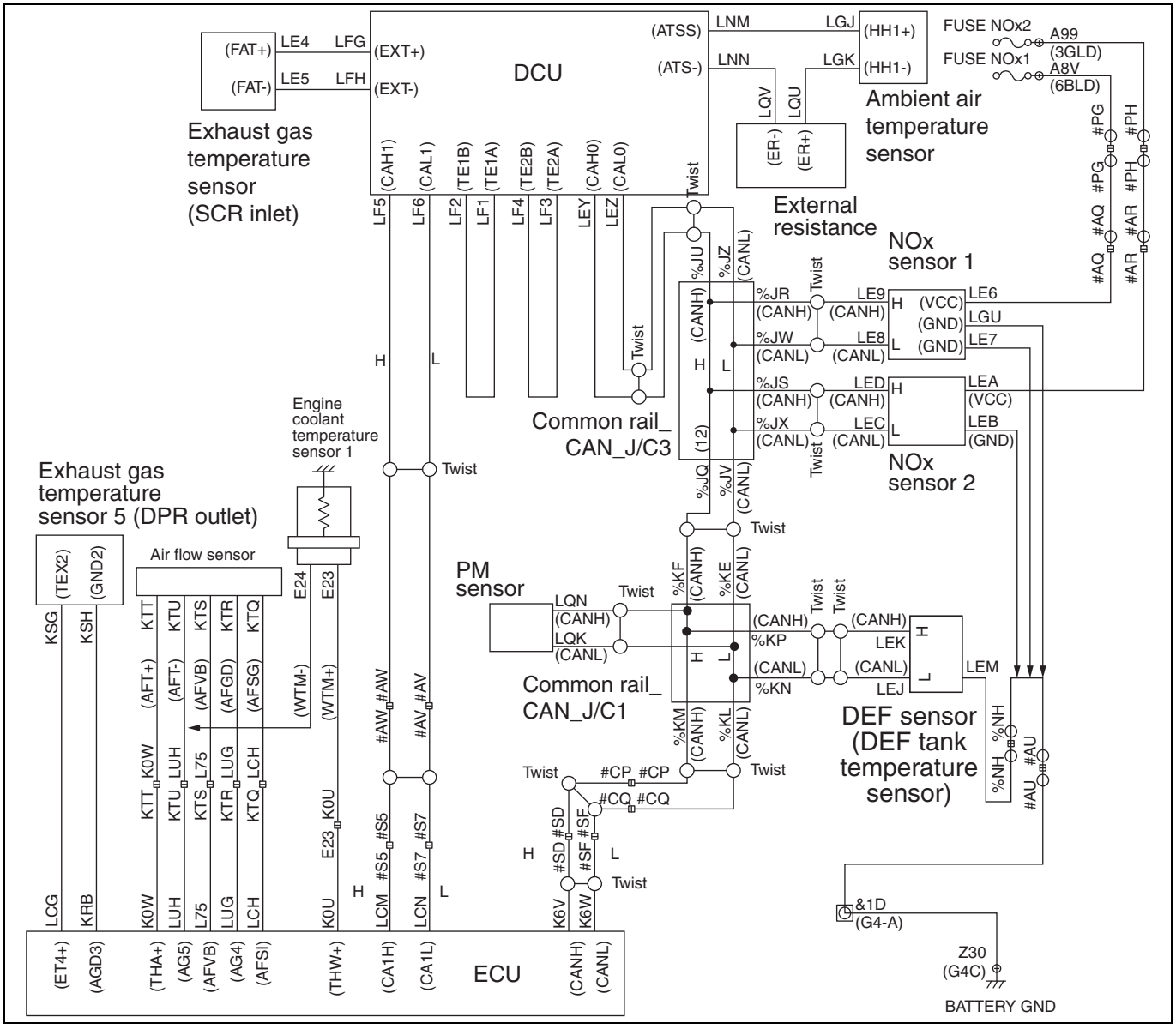


SAPH16F020400266

**1. Technical description**

- At low NOx concentration, NOx sensor 2 (SCR downstream) confirms correct value by comparing with the Judgement criteria.

**<Description of malfunction>**

- Characteristics failure of NOx sensor 2 (SCR downstream) is detected.

**2. DTC set condition**

(1) DTC detection condition

Conditions below continue for 10 sec

- NOx sensor 2 (SCR downstream) is valid.
- 120°C {248°F} ≤ SCR catalyst temperature ≤ 170°C {338°F}
- DPR active regeneration not in process.
- Estimated current $NH_3$ load in SCR – Normal value of $NH_3$ load in SCR ≤ 0 g
- 1,000 r/min ≤ Engine speed ≤ 3,000 r/min
- -0.5°C {32.9°F} ≤Δ SCR catalyst temperature ≤ 0.25°C {32.5°F}

Cumulative exhaust gas mass flow from below condition set > 3000 g

- Fuel injection quantity ≤ 0 $mm^3$/st.

(2) Judgment criteria

When any of the following conditions is satisfied, and has continued for 5 seconds.

- Average actual NOx (from NOx sensor 2 (SCR downstream)) is above 40 ppm
- Average actual NOx (from NOx sensor 2 (SCR downstream)) is below -40 ppm

**3. Reset condition**

- After normal operation is restored.

**4. Indication, warning or system control regulation when the DTC is set.**

- MIL: ON
- SVS light: OFF
- DEF injection is stopped.
- NOx purification function is stopped.

**5. Symptoms on the vehicle when the DTC is set**

**<Symptoms on the vehicle due to backup control (fail safe function)>**

- Exhaust gas purification function has deteriorated.

**<Symptoms on the vehicle due to malfunction>**

- –

**6. Pre-inspection work**

- Check that the battery voltage is in the normal range.

**7. After-inspection work**

- Clear all past DTCs.
- After starting the DPR automatic regeneration, form the DTC detection condition.
- Check that no DTC is detected after test drive.

**8. Estimated failure factors**

- Harness disconnection or short-circuit
- Failure of NOx sensor 1 (SCR upstream)
- NOx sensor 2 (SCR downstream) failure
  - Sensor internal circuit failure
  - NOx sensor controller failure
- Failure of sensor used in calculating model value:
  - Air flow sensor
  - Boost pressure sensor
  - Intake manifold temperature sensor
  - Engine coolant temperature sensor
  - EGR failure

## INSPECTION PROCEDURE: P229F

Refer to the "ENGINE CONTROL SYSTEM (J08E)" in the chapter "ENGINE CONTROL SYSTEM".

# DTC: P22A0

EN01H16F02040F03001070

## DTC: P22A0 NOx sensor (SCR downstream) and Heater - Circuit

INFORMATION

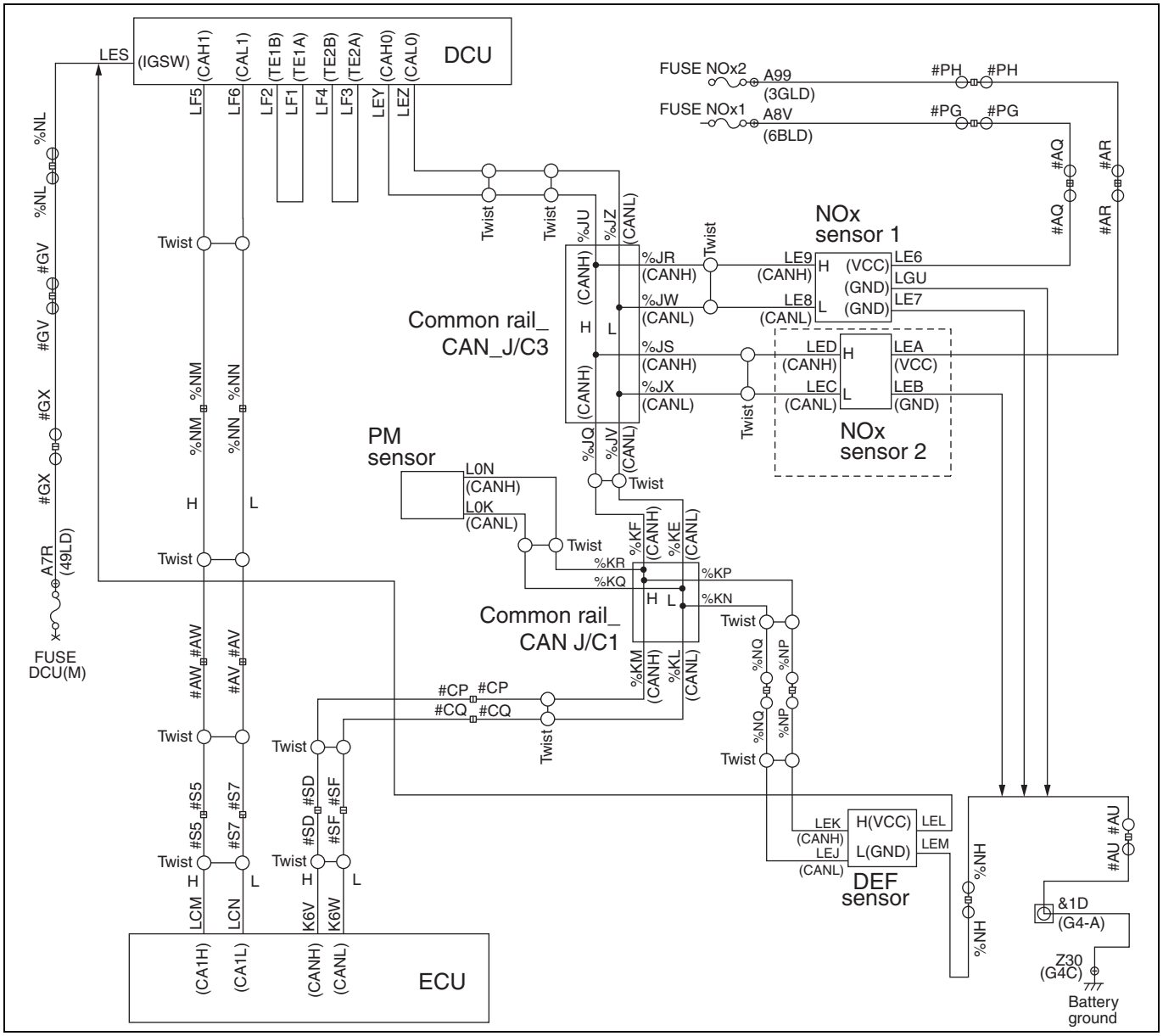


SAPH16F020400267

**1. Technical description**

- The NOx sensor 2 (SCR downstream) is controlled by the NOx sensor controller.
- The NOx sensor controller is connected via the engine ECU and DCU through CAN communication, and it sends and receives data.

**<Description of malfunction>**

- Failure of NOx sensor 2 (SCR downstream) is received from CAN data.

**2. DTC set condition**

(1) DTC detection condition
Starter switch ON.

(2) Judgement criteria
Failure of NOx sensor 2 (SCR downstream) internal circuit (Low failure flag) is received from CAN data.

**3. Reset condition**

- After having restored to the normal conditions.

**4. Indication, warning or system control regulation when the DTC is set.**

- MIL: ON
- DEF injection is stopped.
- NOx reduction quantity monitoring is aborted.

**5. Symptoms on the vehicle when the DTC is set**

**<Symptoms on the vehicle due to backup control (fail safe function)>**

- Exhaust gas purification function is declined.

**<Symptoms on the vehicle due to malfunction>**

- –

**6. Pre-inspection work**

- Check if the battery voltage is in the normal range.

**7. After-inspection work**

- Clear all past DTCs.
- Check if no DTC is stored after test drive.

**8. Estimated failure factors**

- Failure of NOx sensor 2 (SCR downstream)
  - Failure of circuit inside sensor
  - Failure of NOx sensor controller

## INSPECTION PROCEDURE: P22A0

| 1 | Check the DTC detected (DCU) [HINO DX II ] |
|---|---|

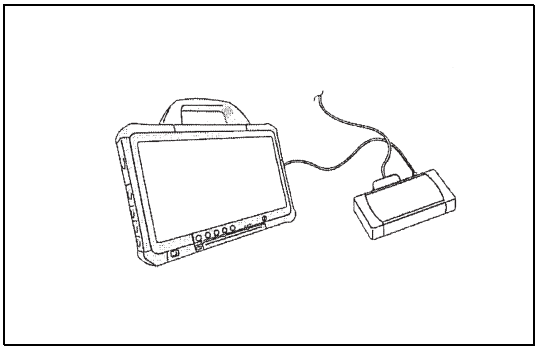

SAPH16F020400268

1. Connect the vehicle to HINO DX II .
2. Set the starter switch to the "ON" position.
3. Select [DCU] and check if a CAN communication system malfunction (U029E) has been detected.

**Has DTC U029E been detected?**

**YES**

**Go to the diagnostic procedure of a related DTC.**

**NO**

**Replace the NOx sensor 2 (SCR downstream).**
**Perform "After-inspection work" of INFORMATION section.**

# DTC: P22A1

EN01H16F02040F03001071

## DTC: P22A1 SCR outlet NOx sensor failure (High)

INFORMATION

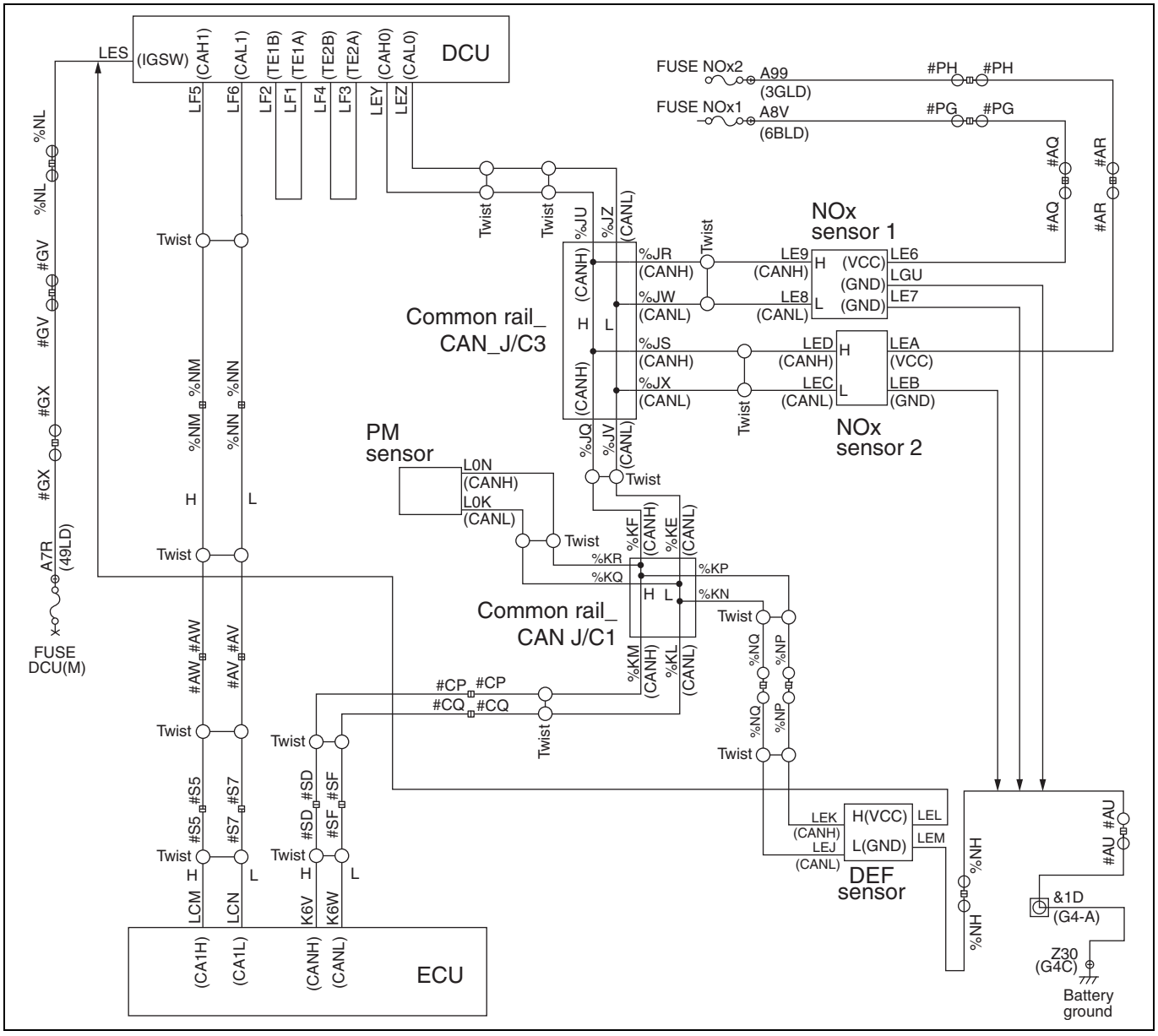


SAPH16F020400269

### 1. Technical description

- The NOx sensor 2 (SCR downstream) is controlled by the NOx sensor controller.
- The NOx sensor controller is connected via the engine ECU and DCU through CAN communication, and it sends and receives data.

**<Description of malfunction>**

- Failure of NOx sensor 2 (SCR downstream) is received from CAN data.

### 2. DTC set condition

(1) DTC detection condition
Starter switch ON.

(2) Judgement criteria
Failure of NOx sensor 2 (SCR downstream) (High failure flag) is received from CAN data.

**3. Reset condition**

- After having restored to the normal conditions.

**4. Indication, warning or system control regulation when the DTC is set.**

- MIL: ON
- DEF injection is stopped.
- NOx reduction quantity monitoring is aborted.

**5. Symptoms on the vehicle when the DTC is set**

**<Symptoms on the vehicle due to backup control (fail safe function)>**

- Exhaust gas purification function is declined.

**<Symptoms on the vehicle due to malfunction>**

- –

**6. Pre-inspection work**

- Check if the battery voltage is in the normal range.

**7. After-inspection work**

- Clear all past DTCs.
- Check if no DTC is stored after test drive.

**8. Estimated failure factors**

- Failure of NOx sensor 2 (SCR downstream)
  - Failure of circuit inside sensor
  - Failure of NOx sensor controller

## INSPECTION PROCEDURE: P22A1

| 1 | Check the DTC detected (DCU) [HINO DX II ] |
|---|---|

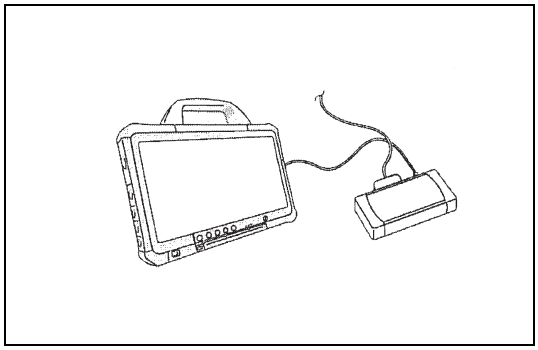

SAPH16F020400270

1. Connect the vehicle to HINO DX II .
2. Set the starter switch to the "ON" position.
3. Select [DCU] and check if a CAN communication system malfunction (U029E) has been detected.

**Has DTC U029E been detected?**

**YES**

**Go to the diagnostic procedure of a related DTC.**

**NO**

**Replace the NOx sensor 2 (SCR downstream).**
**Perform "After-inspection work" of INFORMATION section.**

# DTC: P22A2

EN01H16F02040F03001072

## DTC: P22A2 SCR outlet NOx sensor abnormal

INFORMATION

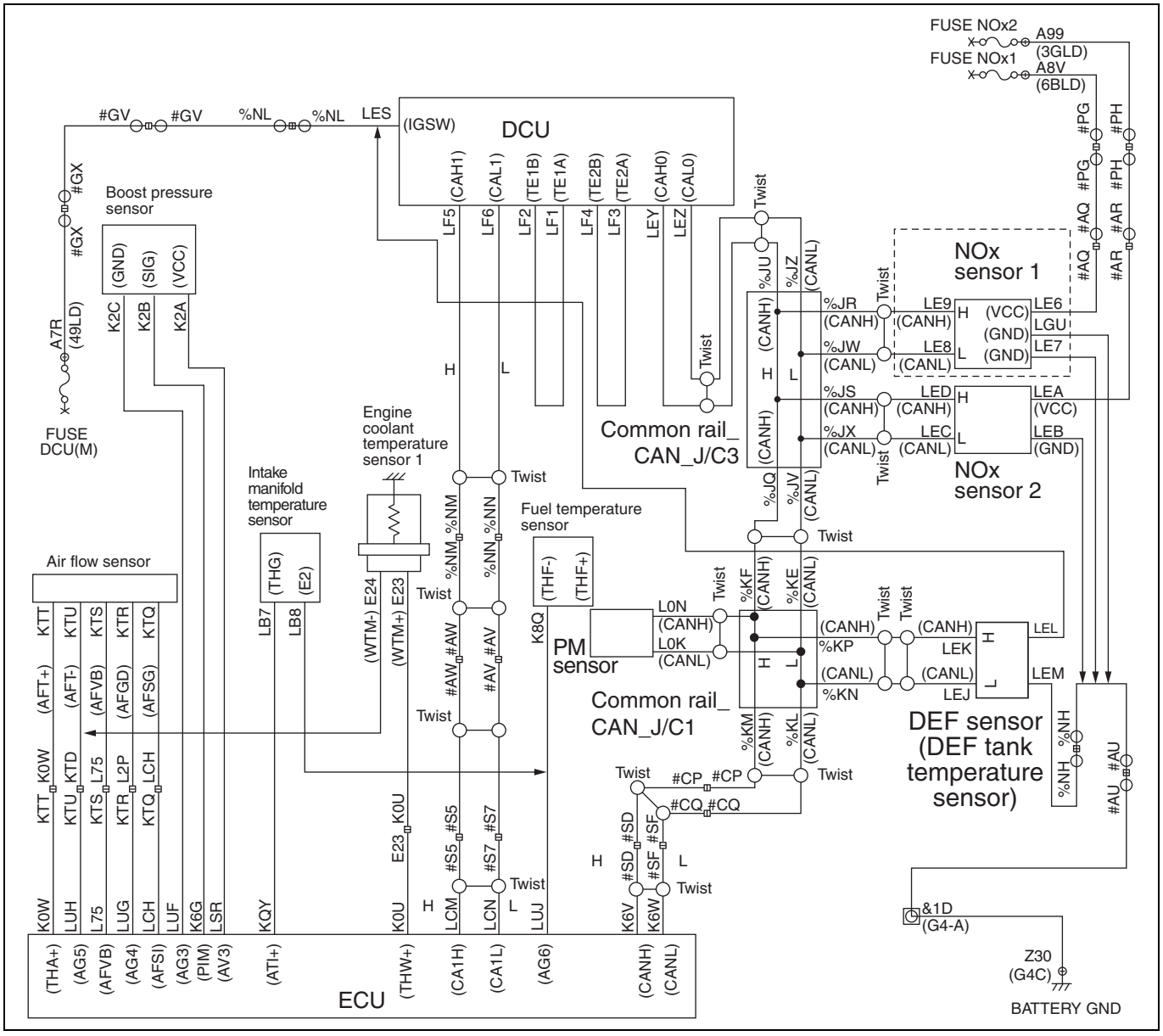


SAPH16F020400271

### 1. Technical description

- NOx is detected by a NOx sensor status signal sent from NOx sensor 2 (SCR downstream).

**<Description of malfunction>**

- Failure of NOx sensor 2 (SCR downstream) is detected.

### 2. DTC set condition

(1) DTC detection condition
NOx sensor is activated
|ΔFuel injection quantity (from ECM) |< 40 mg/cyl/sec.

(2) Judgement criteria
The NOx sensor status signal sent from NOx sensor 2 is invalid for at least 90 sec. in a 180 sec. interval.

**3. Reset condition**

- After having restored to the normal conditions.

**4. Indication, warning or system control regulation when the DTC is set.**

- MIL: ON
- DEF injection is stopped.
- NOx reduction quantity monitoring is aborted.

**5. Symptoms on the vehicle when the DTC is set**

**<Symptoms on the vehicle due to backup control (fail safe function)>**

- Exhaust gas purification function is declined.

**<Symptoms on the vehicle due to malfunction>**

- –

**6. Pre-inspection work**

- Check if the battery voltage is in the normal range.

**7. After-inspection work**

- Clear all past DTCs.
- Check if no DTC is stored after test drive.

**8. Estimated failure factors**

- Harness disconnection or short-circuit
- NOx sensor 2 (SCR downstream) malfunction

## INSPECTION PROCEDURE: P22A2

| 1 | Check the DTC detected (DCU) [HINO DX II ] |
|---|---|

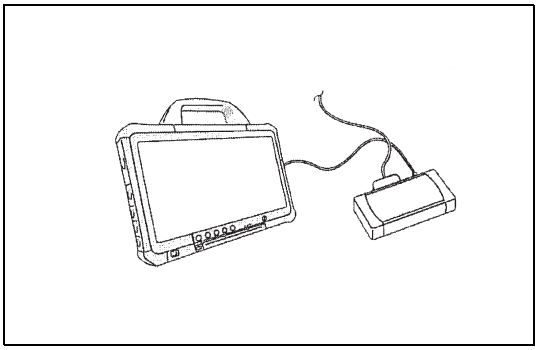

SAPH16F020400272

1. Set the starter switch to the "LOCK" position.
2. Connect the vehicle to HINO DX II .
3. Set the starter switch to the "ON" position.
4. Select [DCU] and check if any DTC other than P22A2 (for example, P22A0, P22A1, P22A7, U029E) has been detected.

**Has a DTC other than P22A2 been detected?**

**YES**

**Go to diagnosis procedure of a related DTC.**

**NO**

**Go to step 2.**

| 2 | Inspect the NOx sensor 2 (SCR downstream) [HINO DX II ] |
|---|---|

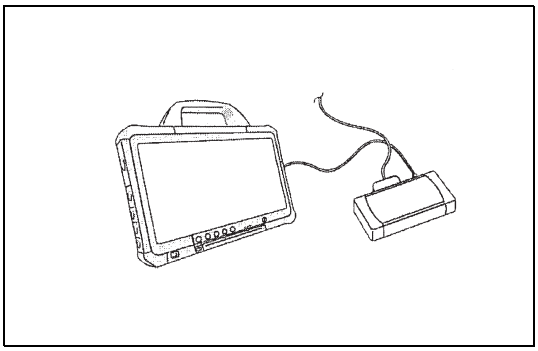

SAPH16F020400273

1. Set the starter switch to the "LOCK" position.
2. Disconnect the NOx sensor 1 (SCR upstream) and NOx sensor 2 (SCR downstream).
3. Install NOx sensors 1 and 2 in the vehicle, in their opposite location.
4. Set the starter switch to the "ON" position.
5. Erase the malfunction history using HINO DX II .
6. Perform a DPR forced regeneration.
7. Select [DCU] and check if P22A2 has been detected.

**Has DTC P22A2 been detected?**

**YES**

**Go to step 3.**

**NO**

**Replace the NOx sensor 2 (SCR downstream).**
**Perform "After-inspection work" of INFORMATION section.**

| 3 | Inspect the engine coolant temperature sensor |
|---|---|

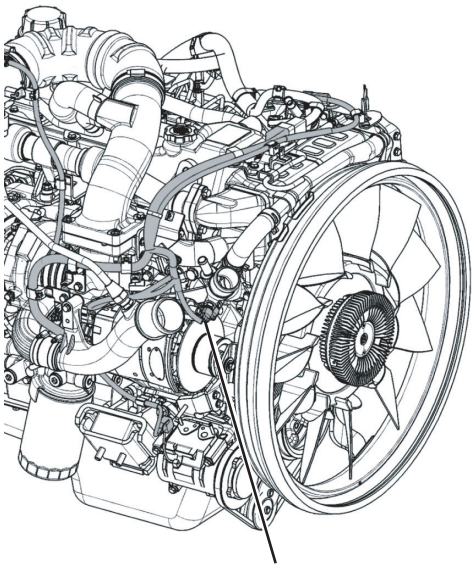
Engine coolant temperature sensor 1

SAPH16F020400274

1. Check the installation of the engine coolant temperature sensor is properly installed.
2. Make sure there is no dirt or damage to the engine coolant temperature sensor.

**Was any failure found?**

**YES**

**Clean the engine coolant temperature sensor and install it properly. If damaged, replace the engine coolant temperature sensor.**
**Perform "After-inspection work" of INFORMATION section.**

**NO**

**Go to step 4.**

| 4 | Check the engine coolant temperature sensor output signal [HINO DX II ] |
|---|---|

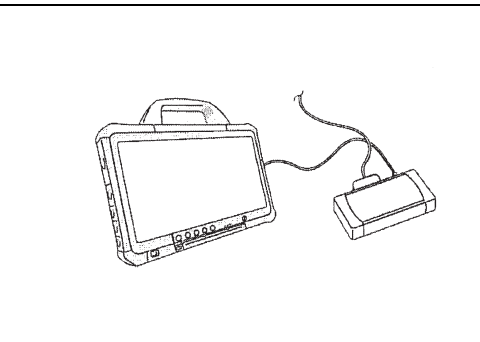

SAPH16F020400275

1. Set the starter switch to the "ON" position.
2. Select [Engine].
3. Select [Engine coolant temperature] from [Data monitor Setting] on the menu.
4. When the engine coolant temperature (actual measured value) is 50 °C {122 °F}, check if the temperature output by the coolant temperature sensor is 50 °C {122 °F}.

| Standard values |
|---|
| **Engine coolant temperature sensor output value: 50 °C {122 °F}** |

**Do the measurements meet the standard value?**

| YES | NO |
|---|---|
| **Go to step 5.** | **Replace the engine coolant temperature sensor.<br>Perform "After-inspection work" of INFORMATION section.** |

| 5 | Inspect the air flow sensor |
|---|---|

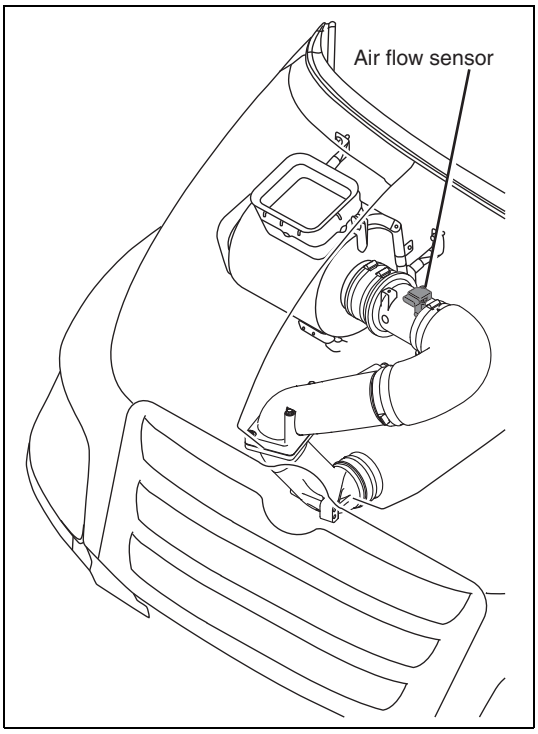

SAPH16F020400276

1. Check the installation of the air flow sensor.
2. Make sure there is no dirt or damage to the air flow sensor.

**Was any failure found?**

| YES | NO |
|---|---|
| **If dirt, clogging or damage in the sensing unit was found, replace the air flow sensor.<br>Perform "After-inspection work" of INFORMATION section.** | **Go to step 6.** |

| 6 | Inspect the boost pressure sensor |
|---|---|

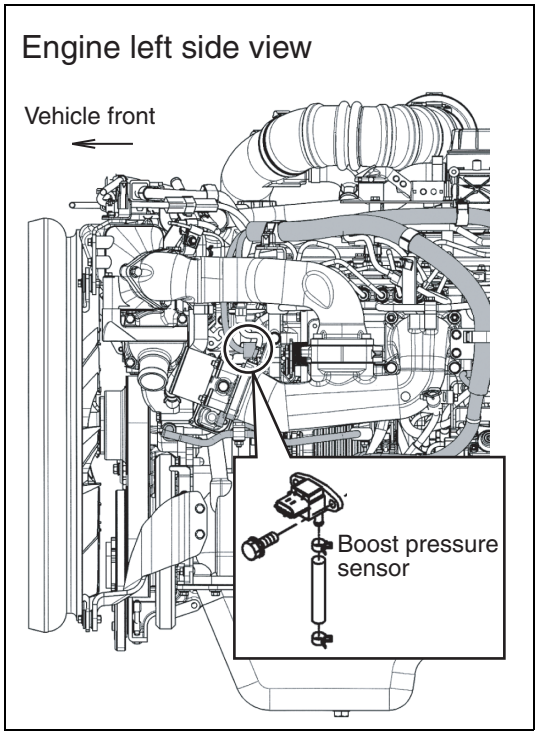


SAPH16F020400277

1. Check the installation of the boost pressure sensor.
2. Make sure there is no dirt or damage to the boost pressure sensor.

**Was any failure found?**

**YES**

**If dirt, clogging or damage in the sensing unit was found, replace the boost pressure sensor.**
**Perform "After-inspection work" of INFORMATION section.**

**NO**

**Go to step 7.**

| 7 | Check the boost pressure sensor output signal [HINO DX II ] |
|---|---|

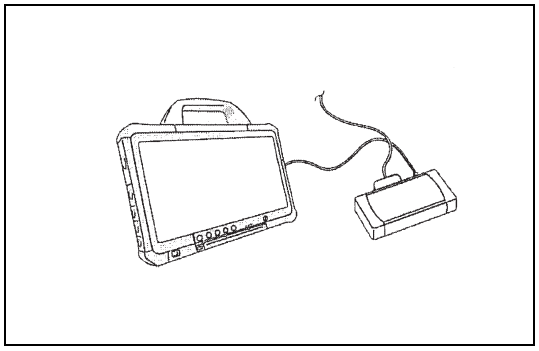

SAPH16F020400278

1. Start the engine.
2. Select [Engine] on the HINO DX II .
3. Select [Actual boost pressure] from [Data monitor Setting] on the menu.
4. Race the engine from idle to No-Load Maximum and check if the boost pressure output signal varies.

| Standard values |
|---|
| **Boost pressure sensor output value: There is no abnormal change in the sensor output signal. (The pressure sensor signal changes according to the engine speed)** |

**Do the measurements meet the standard value?**

**YES**

**Go to step 8.**

**NO**

**Replace the boost pressure sensor.**
**Perform "After-inspection work" of INFORMATION section.**

## 8 Inspect the intake manifold temperature sensor

1. Check the installation of the intake manifold temperature sensor.
2. Make sure there is no dirt or damage to the intake manifold temperature sensor.

**Was any failure found?**

**YES**

**Clean the intake manifold temperature sensor and install it properly. If damaged, replace the intake manifold temperature sensor.**
**Perform "After-inspection work" of INFORMATION section.**

**NO**

**Go to step 9.**

## 9 Inspect the Intake manifold temperature sensor unit

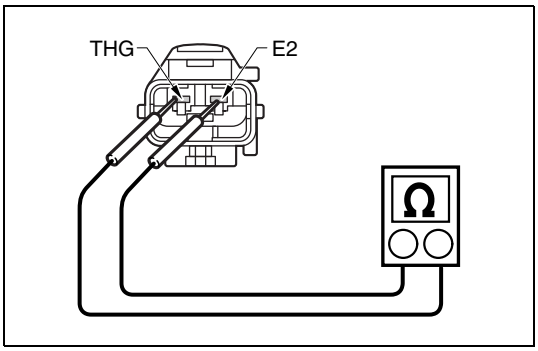


SAPH16F020400279

1. Set the starter switch to the "LOCK" position.
2. Disconnect the intake manifold temperature sensor connector.
3. Use the electrical tester to measure the resistance between the terminals of the intake manifold temperature sensor.

| Measurement conditions | Tester connections | Standard values |
|---|---|---|
| Starter switch: LOCK | Intake manifold temperature sensor THG – E2 | 20 °C {68 °F}: 7.336 – 5.794 kΩ<br>50 °C {122 °F}: 2.435 – 1.994 kΩ |

**Do the measurements meet the standard value?**

YES

**Go to step 10.**

NO

**Replace the Intake manifold temperature sensor.**
**Perform "After-inspection work" of INFORMATION section.**

| 10 | Inspection of the NOx sensor 2 [HINO DX ll ] |
|---|---|

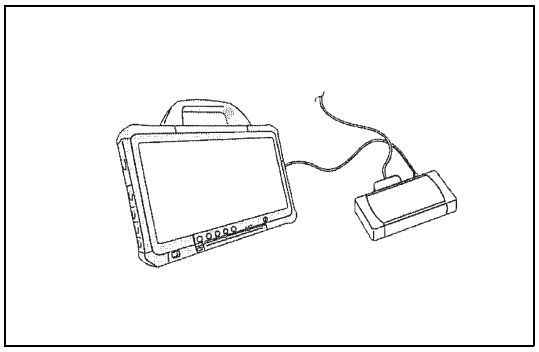

SAPH16F020400280

1. Replace NOx sensor 2 with a new sensor.
2. Set the starter switch to the "ON" position.
3. Select [DCU] and check if P22A2 has been detected.

**Has DTC P22A2 been detected?**

YES

**Replace the DCU.**
**Perform "After-inspection work" of INFORMATION section.**

NO

**NOx sensor 2 is faulty. Install a new NOx sensor 2.**
**Perform "After-inspection work" of INFORMATION section.**

# DTC: P22A7

EN01H16F02040F03001073

## DTC: P22A7 NOx sensor (SCR downstream) Heater Sense Circuit Range/Performance

INFORMATION

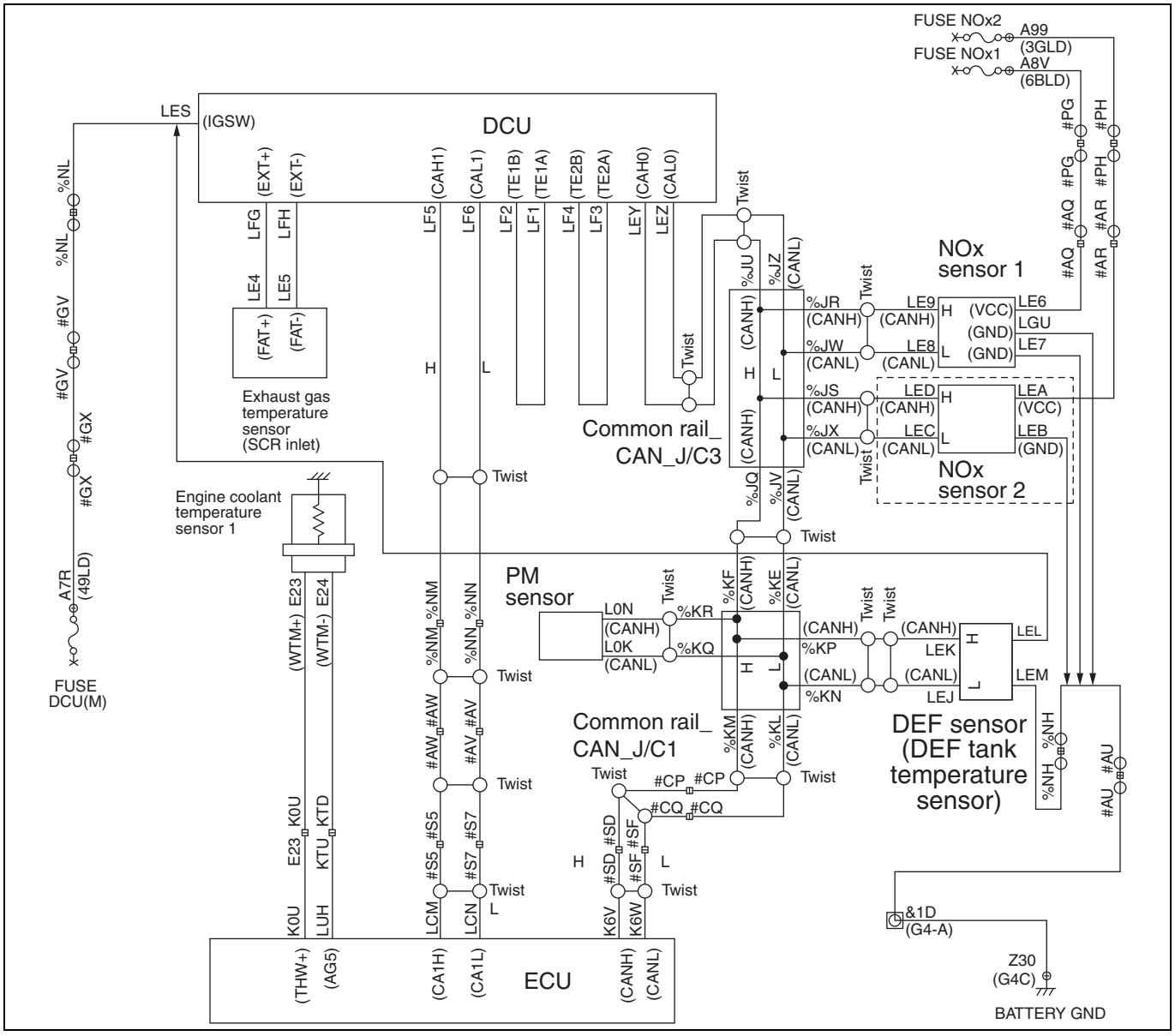


SAPH16F020400281

**1. Technical description**

- The NOx sensors (SCR downstream) are controlled by the NOx sensor controller.
- The NOx sensor controller is connected to the DCU via the harness for reception and transmission of information.

**<Description of malfunction>**

- NOx sensor 2 (SCR downstream) heater malfunction is detected.

**2. DTC set condition**

(1) DTC detection condition
Starter switch ON.
SCR catalyst upstream temperature (exhaust gas temperature (SCR downstream)) ≥ 200 °C {392 °F}
Engine coolant temperature ≥ 70 °C {158 °F}

(2) Judgement criteria
NOx sensor 2 does not detect appropriate NOx value even after 180 sec. after the NOx sensor 2 (SCR outlet) heater has started to operate.

**3. Reset condition**

- After having restored to the normal conditions.

**4. Indication, warning or system control regulation when the DTC is set.**

- MIL: ON
- DEF injection is stopped.
- NOx reduction quantity monitoring is aborted.

**5. Symptoms on the vehicle when the DTC is set**

**<Symptoms on the vehicle due to backup control (fail safe function)>**

- Exhaust gas purification function is declined.

**<Symptoms on the vehicle due to malfunction>**

- –

**6. Pre-inspection work**

- Check if the battery voltage is in the normal range.

**7. After-inspection work**

- Clear all past DTCs.
- Check if no DTC is stored after test drive.

**8. Estimated failure factors**

- Harness disconnection or short-circuit
- NOx sensor 2 (SCR downstream) malfunction
  - Sensor internal circuit malfunction
  - NOx sensor controller malfunction

## INSPECTION PROCEDURE: P22A7

| 1 | Inspect the NOx sensor 2 (SCR downstream) connector |
|---|---|

1. Check the connection of the NOx sensor 2 (SCR downstream) connector (Looseness and poor contact).

**Was any failure found?**

**YES**

**Connect securely, repair if needed.**
**Perform "After-inspection work" of INFORMATION section.**

**NO**

**Go to step 2.**

| 2 | Inspect the NOx sensor 2 harness (CAN communication line) |
|---|---|

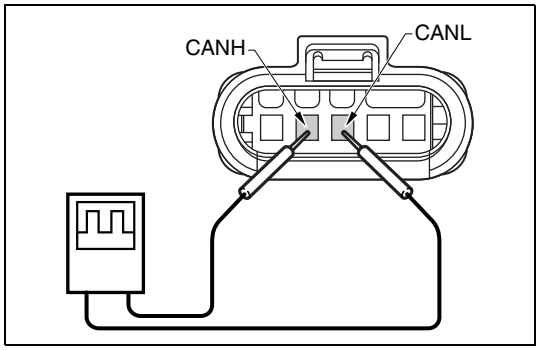


SAPH16F020400282

1. Set the starter switch to the "LOCK" position.
2. Disconnect the NOx sensor 2 connector.
3. Set the starter switch to the "ON" position.
4. Use the oscilloscope to measure the voltage between the terminals of the NOx sensor 2 vehicle-side connector.

| Measurement conditions | Tester connections | Standard values |
|---|---|---|
| Starter switch: ON | NOx sensor 2 vehicle-side connector<br>CANH – CANL | Pulse waves in the range of 0 V to 5 V. |

**Do the measurements meet the standard value?**

**YES**

**Go to step 3.**

**NO**

**Repair or replace the harness.**
**Perform "After-inspection work" of INFORMATION section.**

| 3 | Inspect the NOx sensor 2 harness (GND line) |
|---|---|

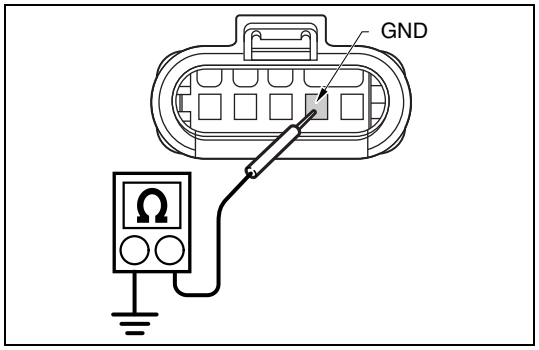

SAPH16F020400283

1. Set the starter switch to the "LOCK" position.
2. Use the electrical tester to measure the resistance between the GND terminal in the NOx sensor 2 vehicle-side connector and the ground.

| Measurement conditions | Tester connections | Standard values |
|---|---|---|
| Starter switch: LOCK | NOx sensor 2 vehicle-side connector<br>GND – Ground | 1 Ω or less |

**Do the measurements meet the standard value?**

**YES**

**Go to step 4.**

**NO**

**Repair or replace the harness.**
**Perform "After-inspection work" of INFORMATION section.**

| 4 | Inspect the NOx sensor 2 harness (Power supply line) |
|---|---|

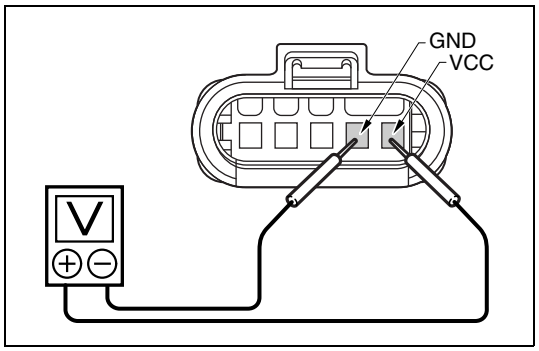

SAPH16F020400284

1. Set the starter switch to the "ON" position.
2. Use the electrical tester to measure the voltage between the terminals of the NOx sensor 2 vehicle-side connector.

| Measurement conditions | Tester connections | Standard values |
|---|---|---|
| Starter switch: ON | NOx sensor 2 vehicle-side connector<br>VCC – GND | 9 –16 V |

**Do the measurements meet the standard value?**

**YES**

**Go to step 5.**

**NO**

**Repair or replace the harness.**
**Perform "After-inspection work" of INFORMATION section.**

| 5 | Inspect exhaust gas temperature sensor (SCR inlet) connector |
|---|---|

1. Check the connection of the exhaust gas temperature sensor (SCR inlet) connector (Looseness and poor contact).

**Was any failure found?**

**YES**

**Connect securely, repair if needed.**
**Perform "After-inspection work" of INFORMATION section.**

**NO**

**Go to step 6.**

| 6 | Inspect the exhaust gas temperature sensor (SCR inlet) |
|---|---|

1. Check the installation of the exhaust gas temperature sensor (SCR inlet).
2. Make sure there is no dirt or damage to the exhaust gas temperature sensor (SCR inlet).

**Was any failure found?**

**YES**

**Clean the exhaust gas temperature sensor (SCR inlet) and install it properly. If damaged, replace the exhaust gas temperature sensor (SCR inlet).**
**Perform "After-inspection work" of INFORMATION section.**

**NO**

**Go to step 7.**

| 7 | Inspect the exhaust gas temperature sensor (SCR inlet) unit |
|---|---|

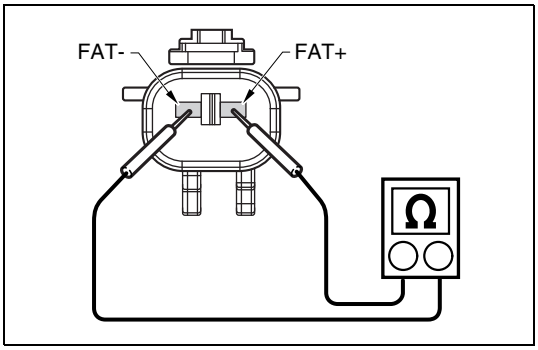


SAPH16F020400285

1. Set the starter switch to the "LOCK" position.
2. Disconnect the exhaust gas temperature sensor (SCR inlet) connector.
3. Use the electrical tester to measure the resistance between the terminals of the exhaust gas temperature sensor (SCR inlet).

| Measurement conditions | Tester connections | Standard values |
|---|---|---|
| **Starter switch: LOCK** | **Exhaust gas temperature sensor (SCR upstream) FAT+ – FAT-** | **20 °C {68 °F}: 220 Ω** |

**Do the measurements meet the standard value?**

| YES | NO |
|---|---|
| **Go to step 8.** | **Replace the exhaust gas temperature sensor (SCR inlet).**<br>**Perform "After-inspection work" of INFORMATION section.** |

| 8 | **Inspect the engine coolant temperature sensor connector** |
|---|---|

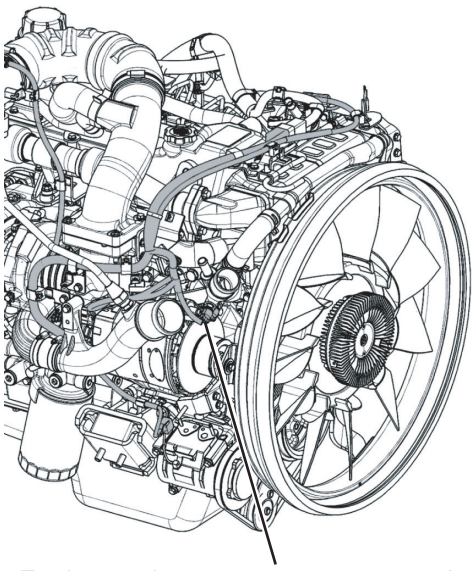


SAPH16F020400286

1. Check the connection of the engine coolant temperature sensor connector (Looseness and poor contact).

**Was any failure found?**

| YES | NO |
|---|---|
| **Connect securely, repair if needed.**<br>**Perform "After-inspection work" of INFORMATION section.** | **Go to step 9.** |

| 9 | Inspect the engine coolant temperature sensor |
|---|---|

1. Check the installation of the engine coolant temperature sensor.
2. Make sure there is no dirt or damage to the engine coolant temperature sensor.

**Was any failure found?**

**YES**

**Clean the engine coolant temperature sensor and install it properly. If damaged, replace the engine coolant temperature sensor.**
**Perform "After-inspection work" of INFORMATION section.**

**NO**

**Go to step 10.**

| 10 | Inspect the engine coolant temperature sensor unit |
|---|---|

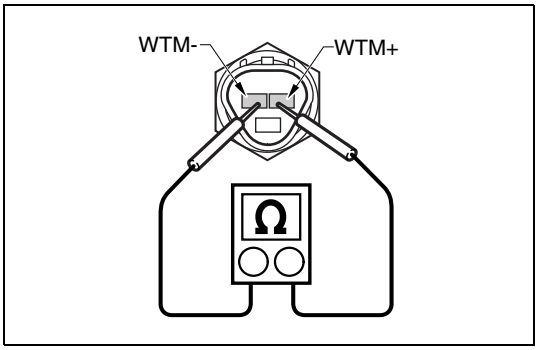

SAPH16F020400287

1. Disconnect the engine coolant temperature sensor connector.
2. Use the electrical tester to measure the resistance between the terminals of the engine coolant temperature sensor.

| Measurement conditions | Tester connections | Standard values |
|---|---|---|
| Starter switch: LOCK | Engine coolant temperature sensor WTM+ – WTM- | 20 °C {68 °F}: 2.32 – 2.59 kΩ<br>80 °C {176 °F}: 0.310 – 0.326 kΩ |

**Do the measurements meet the standard value?**

**YES**

**Go to step 11.**

**NO**

**Replace the engine coolant temperature sensor.**
**Perform "After-inspection work" of INFORMATION section.**

| 11 | Check the NOx sensor 2 [HINO DX II ] |
|---|---|

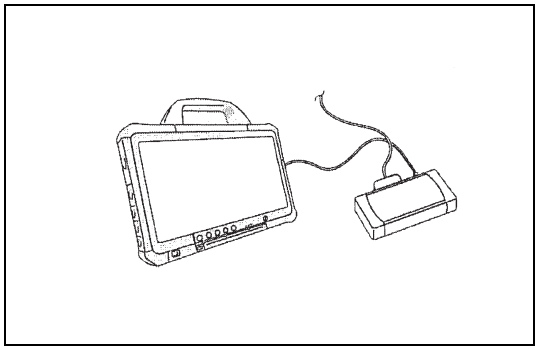

SAPH16F020400288

1. Set the starter switch to the "LOCK" position.
2. Replace with a new NOx sensor 2.
3. Connect the vehicle to HINO DX II .
4. Set the starter switch to the "ON" position.
5. Erase the malfunction history and perform a DPR forced regeneration.
6. Select [DCU] and check if P22A7has been detected.

**Has DTC P22A7 been detected?**

**YES**

**Replace the DCU. (After replacing, operate DPR forced regeneration.)**
**Perform "After-inspection work" of INFORMATION section.**

**NO**

**Procedure completed.**
**Perform "After-inspection work" of INFORMATION section.**

# DTC: P2510

EN01H16F02040F03001074

## DTC: P2510 DeNOx Power Relay Sense Circuit Range/Performance

INFORMATION

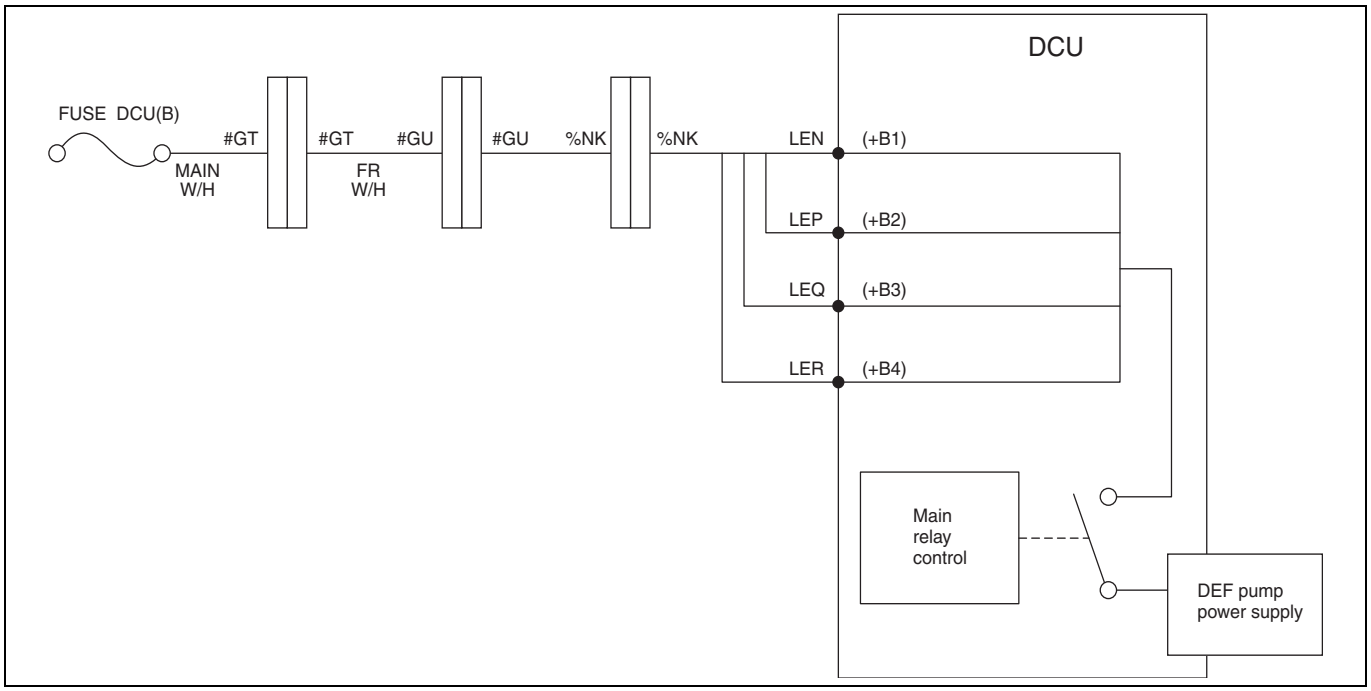


SAPH16F020400289

**1. Technical description**

- After turning off starter switch, DCU stays active for few minutes to evacuation DEF from lines to tank, then writes the data to the DCU ROM before shut-down.
- After completion of data writing to the ROM, the DCU switches the main relay (built-in in the DCU) off.
- The DCU confirms the ROM and checks that the preceding ROM data writing as being completed correctly.

**<Description of malfunction>**

- Failure detected in the main relay.

**2. DTC set condition**

(1) DTC detection condition
Engine operating.

(2) Judgement criteria
When the ROM data writing status was incomplete before the preceding DCU shut-down.

**3. Reset condition**

- Detects that the DCU was successfully finished during the previous operation.

**4. Indication, warning or system control regulation when the DTC is set.**

- MIL: ON
- DEF injection is stopped.
- NOx reduction quantity monitoring is aborted.

**5. Symptoms on the vehicle when the DTC is set**

**<Symptoms on the vehicle due to backup control (fail safe function)>**

- Exhaust gas purification function is declined.

**<Symptoms on the vehicle due to malfunction>**

- –

**6. Pre-inspection work**

- Check if the battery voltage is in the normal range.

**7. After-inspection work**

- Clear all past DTCs.
- Check if no DTC is stored after test drive.

**8. Estimated failure factors**

- Battery
  - Too high or low voltage
  - Battery replaced before the complete shut-down of the DCU was performed
  - When the battery voltage was cut before the complete DCU shut-down
- DCU malfunction

## INSPECTION PROCEDURE: P2510

| 1 | Check the DTC detected (DCU) [HINO DX II ] |
|---|---|

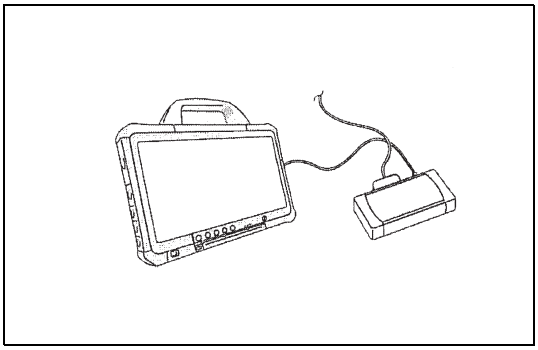

SAPH16F020400290

1. Connect the vehicle to HINO DX II .
2. Set the starter switch to the "ON" position.
3. Select [DCU] and check if any DTC other than P2510 (for example, P0562) has been detected.

**HINT**
**If the battery switch is turned OFF or the battery terminal is removed when the DCU is shut down, the present fault code (P2510) may be detected.**

**Has a DTC other than P2510 been detected?**

**YES** → **Go to diagnosis procedure of a related DTC.**

**NO** → **Go to step 2.**

| 2 | Inspect the DCU power supply circuit |
|---|---|

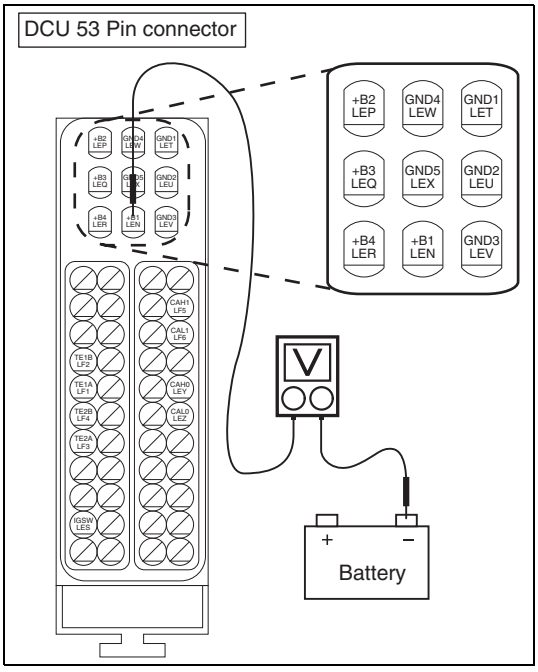


SAPH16F020400291

1. Set the starter switch to the "LOCK" position.
2. Disconnect the DCU 53P connector.
3. Set the starter switch to the "ON" position.
4. Connect the signal check harness and use the electrical tester to measure the voltage between the each terminal of DCU 53P vehicle-side connector and the battery minus (BAT-).

| Measurement conditions | Tester connections | Standard values |
|---|---|---|
| Starter switch: ON | DCU 53P vehicle-side connector – BAT-<br>+B1 – BAT-<br>+B2 – BAT-<br>+B3 – BAT-<br>+B4 – BAT- | 9 V – 16 V |

**Do the measurements meet the standard value?**

**YES** → **Go to step 3.**

**NO** → **Inspect or repair the power supply circuit (harness).**
**Perform "After-inspection work" of INFORMATION section.**

## 3 Inspect the DCU harness

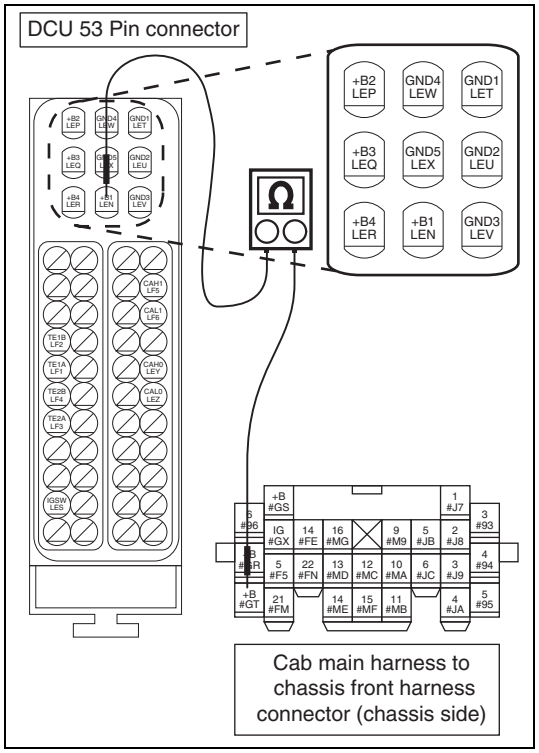


SAPH16F020400292

1. Set the starter switch to the "LOCK" position.
2. Disconnect the connector between the cab main harness and chassis front harness.
3. Connect the signal check harness and use the electrical tester to measure the resistance between the DCU 53P vehicle-side connector and each terminal of the chassis front harness connector (chassis side) of the cab main harness.

| Measurement conditions | Tester connections | Standard values |
|---|---|---|
| **Starter switch: LOCK** | **DCU 53P vehicle-side connector – chassis side connector**<br>**+B1 – #GT**<br>**+B2 – #GT**<br>**+B3 – #GT**<br>**+B4 – #GT** | **1 Ω or less** |

**Do the measurements meet the standard value?**

**YES**

**Go to step 4.**

**NO**

**Inspect or repair the power supply circuit (harness).**
**Perform "After-inspection work" of INFORMATION section.**

| 4 | Check the DTC detected (DCU) [HINO DX II ] |
|---|---|

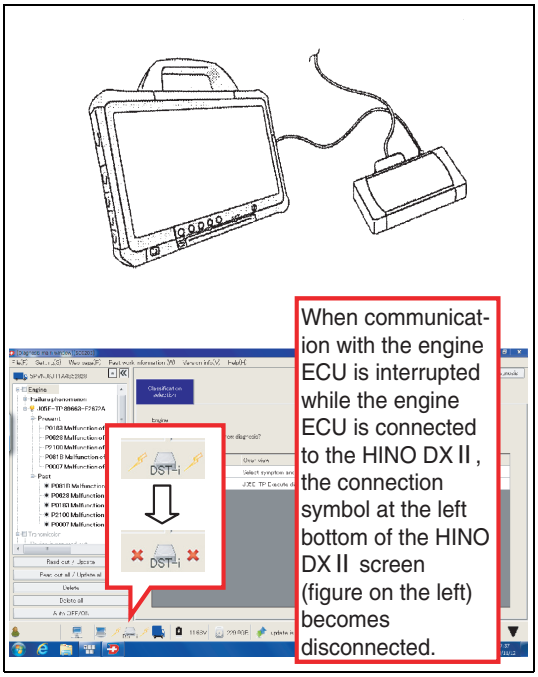


SAPH16F020400293

1. Set the starter switch to the "ON" position.
2. Select [DCU].
3. Erase the malfunction history using HINO DX II .
4. Start up the engine.
5. Keep the vehicle connecting to HINO DX II and set the starter switch to the "LOCK" position.
6. After checking that communication between HINO DX II and the DCU has been disconnected, set the starter switch to the "ON" position again.
7. Select [DCU] and check if P2510 has been detected.

**Has DTC P2510 detected?**

**YES**

**Replace the DCU.**
**Perform "After-inspection work" of INFORMATION section.**

**NO**

**Procedure completed.**
**Perform "After-inspection work" of INFORMATION section.**

# DTC: P2BAE

EN01H16F02040F03001075

## DTC: P2BAE Feedback control

INFORMATION

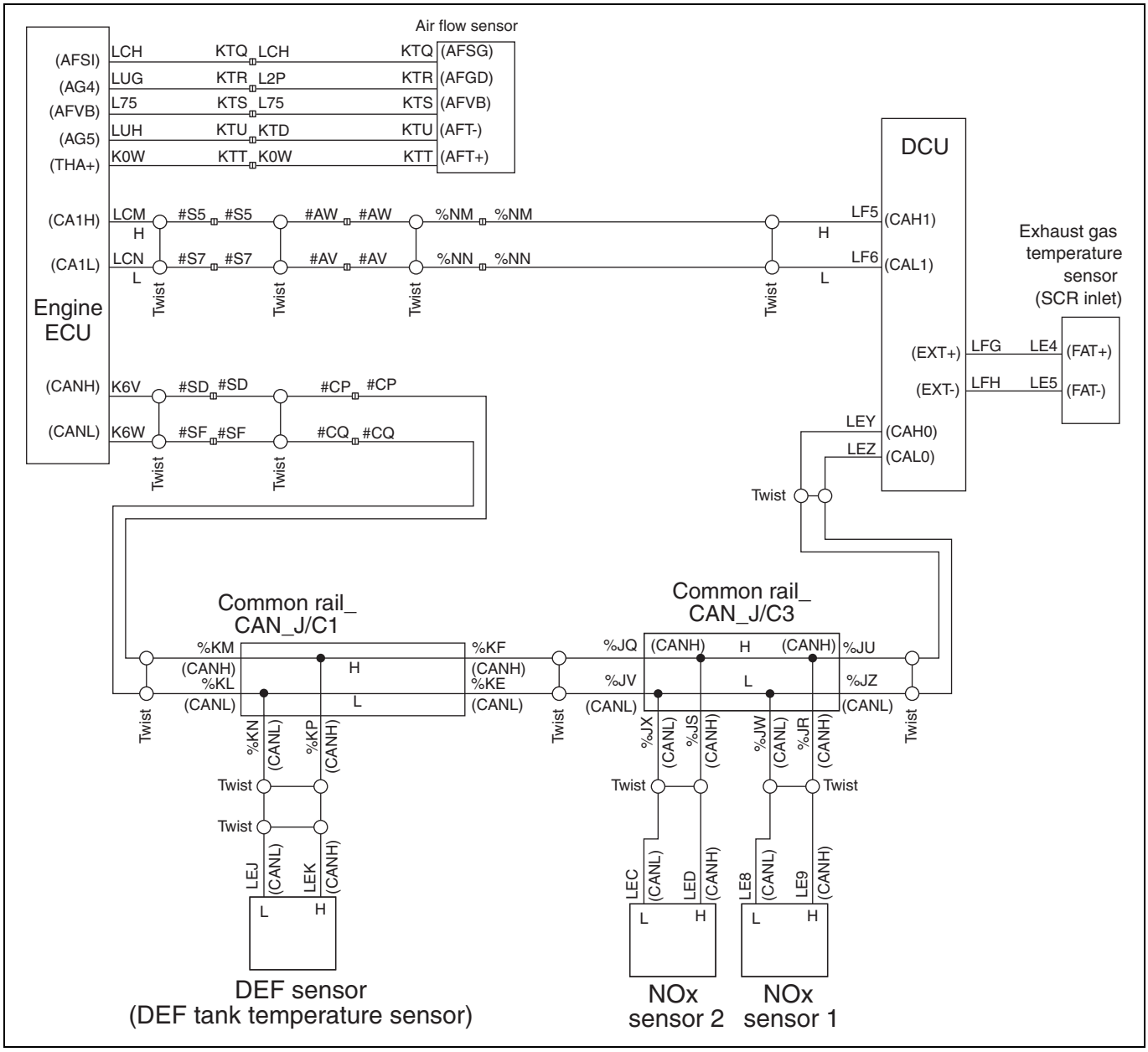


SAPH16F020400294

**1. Technical description**

- The DEF injection control feeds back DEF dose if a measured NOx purification quantity deviates from an estimated NOx purification rate.
- The NOx sensor measures NOx level and also counts $NH_3$ as NOx.

**<Description of malfunction>**

- Failure of DEF injection control is detected.
- Feedback is reset when the target purification quantity during feedback implementation is stuck at the maximum value. If reset is repeated, this DTC is detected.

**2. DTC set condition**

(1) DTC detection condition
The engine is ON.

(2) Judgement criteria
Dosing feedback is reset 3 times at an interval of 180 sec. or shorter.

**3. Reset condition**

- After having restored to the normal conditions.

**4. Indication, warning or system control regulation when the DTC is set.**

- MIL: ON
- DEF injection is stopped.
- NOx reduction quantity monitoring is aborted.

**5. Symptoms on the vehicle when the DTC is set**

**<Symptoms on the vehicle due to backup control (fail safe function)>**

- Exhaust gas purification function is declined.

**<Symptoms on the vehicle due to malfunction>**

- –

**6. Pre-inspection work**

- Check if the battery voltage is in the normal range.

**7. After-inspection work**

- Clear all past DTCs.
- Check if no DTC is stored after test drive.

**8. Estimated failure factors**

- It is likely that a NOx purification quantity has dropped or $NH_3$ slip has occurred.
(When the amount of NOx to be purified is small compared with the amount of DEF solution, $NH_3$-slip will occur. In the NOx sensor, $NH_3$ is functionally counted as NOx; when $NH_3$-slip occurs, therefore, the NOx sensor reading will be higher than the actual value.)
- NOx sensor 1 (SCR upstream)
  - If the NOx sensor 1 (SCR upstream) reads low or high NOx due to malfunction, the NOx sensor 2 (SCR downstream) reading may be high due to $NH_3$ slip.
- NOx sensor 2 (SCR downstream)
  - It is likely that the NOx sensor 2 (SCR downstream) reads high NOx.
- DEF: Low concentration
- DEF dose: Excessively low level of DEF dose
- SCR catalyst: When purification performance is degraded by deterioration of the catalyst, feedback control will be activated.

**NOTICE**

**If no trouble causes are found, it can be suspected that the respective DTC was issued because of a temporary fault condition caused by the freezing of the DEF.**

## INSPECTION PROCEDURE: P2BAE

Refer to the "INSPECTION PROCEDURE: P207F" in the chapter "ENGINE CONTROL SYSTEM (J08E)".

# DTC: U0029

EN01H16F02040F03001076

## DTC: U0029 Vehicle Communication Bus A Performance

INFORMATION

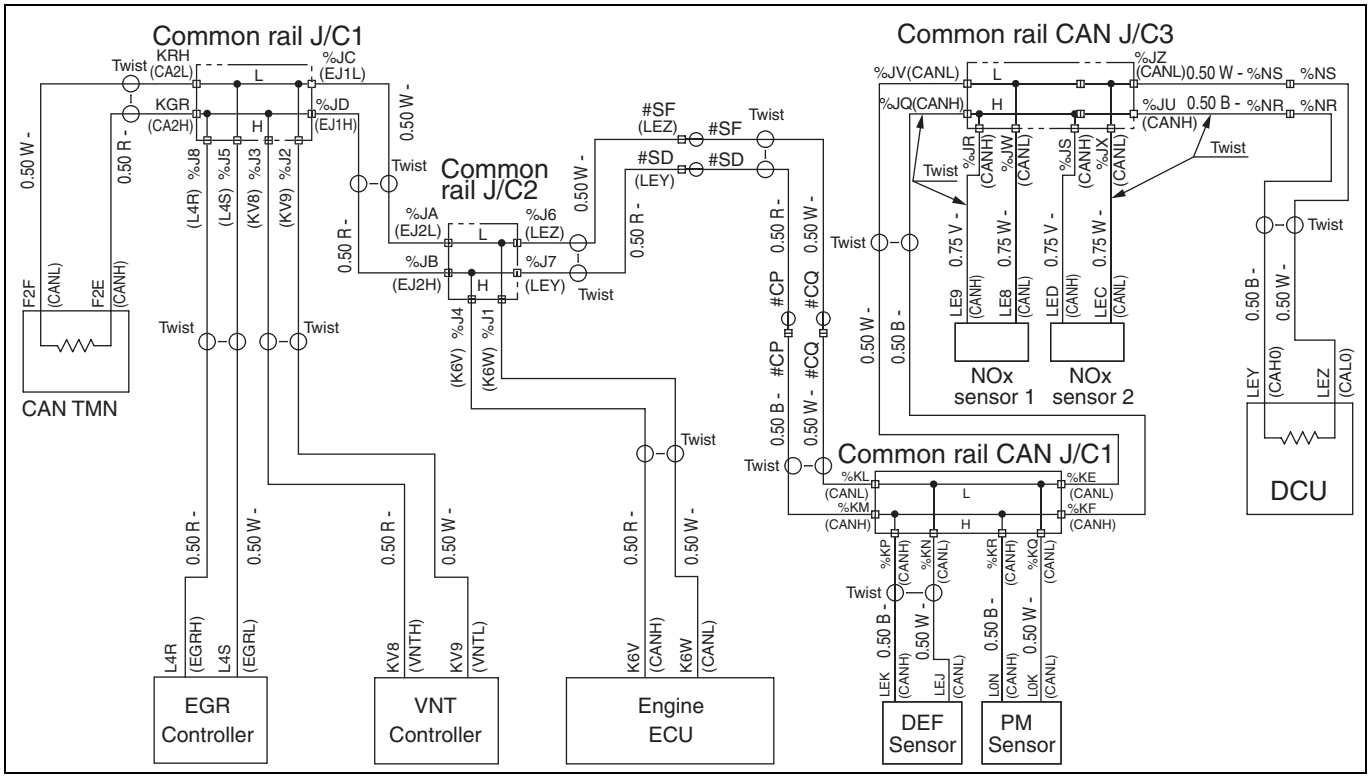


SAPH16F020400295

**1. Technical description**

- Vehicle communication bus (CAN) A (ENGINE CAN LINE) is connected to CAN terminator, Engine ECU, EGR, VNT, NOx sensor 1 (SCR upstream), NOx sensor 2 (SCR downstream), DEF sensor and DCU.

**<Description of malfunction>**

- Interruption in CAN communication is detected.

**2. DTC set condition**

(1) DTC detection condition
Starter switch ON.

(2) Judgement criteria
DCU cannot receive all message from CAN A (ENGINE CAN LINE).

**3. Reset condition**

- After having restored to the normal conditions.

**4. Indication, warning or system control regulation when the DTC is set.**

- DEF injection is stopped.
- NOx reduction quantity monitoring is aborted.

**5. Symptoms on the vehicle when the DTC is set**

**<Symptoms on the vehicle due to backup control (fail safe function)>**

- Exhaust gas purification function is declined.

**<Symptoms on the vehicle due to malfunction>**

- –

**6. Pre-inspection work**

- Check if the battery voltage is in the normal range.

**7. After-inspection work**

- Clear all past DTCs.
- Check if no DTC is stored after test drive.

**8. Estimated failure factors**

- Harness disconnection or short-circuit
- Looseness or poor contact of connector
- DCU malfunction

## INSPECTION PROCEDURE: U0029

Refer to the "ENGINE CAN COMMUNICATION LINE" in the chapter "CAN COMMUNICATION".

# DTC: U0038

EN01H16F02040F03001077

## DTC: U0038 Vehicle Communication Bus B Performance

INFORMATION

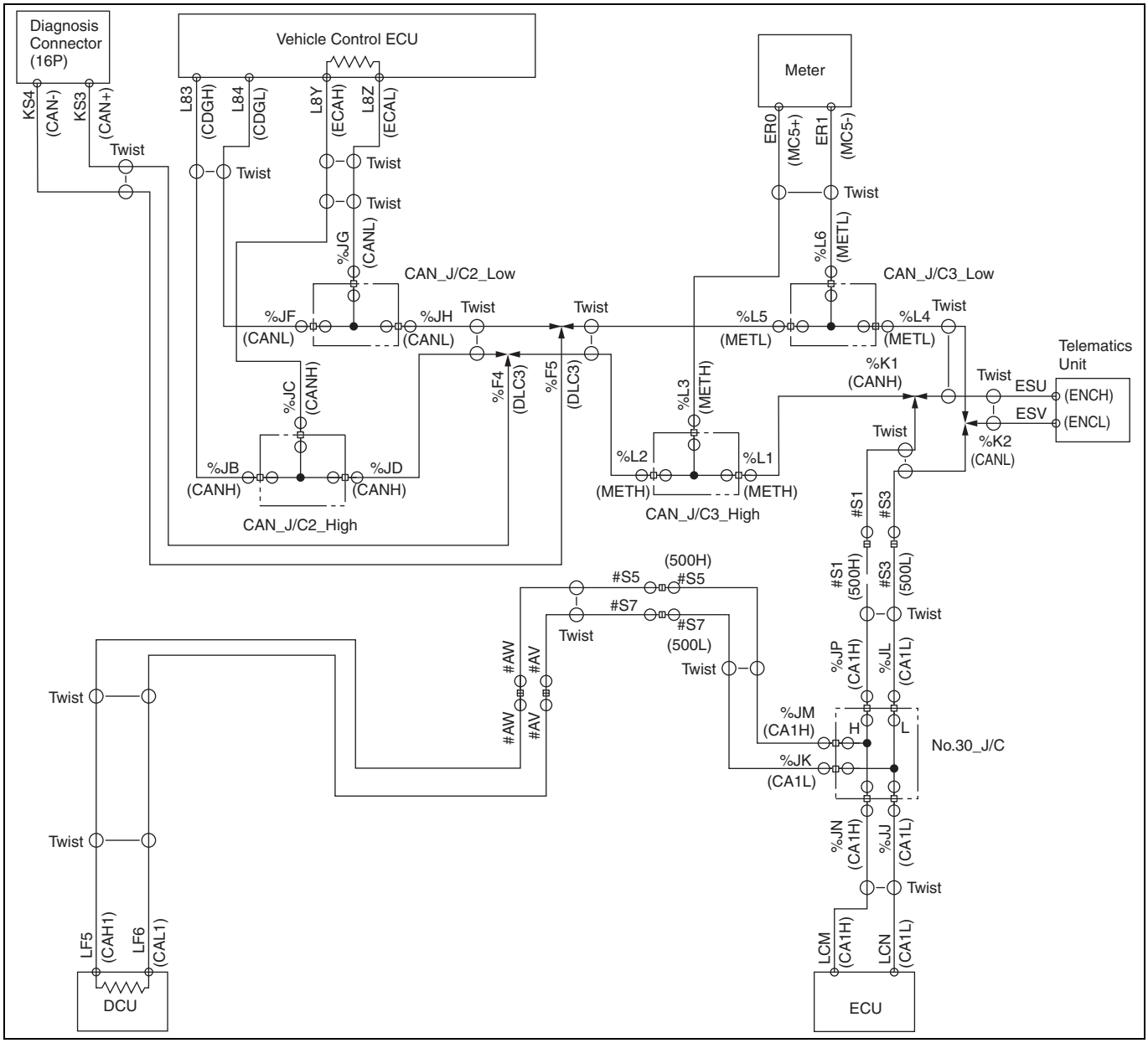


SAPH16F020400296

**1. Technical description**

- Vehicle communication bus B (Diagnosis CAN line) is connected to diagnosis connector for HINO DX II .

**<Description of malfunction>**

- Interruption in CAN communication is detected.

**2. DTC set condition**

(1) DTC detection condition
Starter switch ON.

(2) Judgement criteria
DCU cannot receive all massage from CAN B (Diagnosis CAN line).

**3. Reset condition**

- After having restored to the normal conditions.

**4. Indication, warning or system control regulation when the DTC is set.**

- –

**5. Symptoms on the vehicle when the DTC is set**

**<Symptoms on the vehicle due to backup control (fail safe function)>**

- –

**<Symptoms on the vehicle due to malfunction>**

- –

**6. Pre-inspection work**

- Check if the battery voltage is in the normal range.

**7. After-inspection work**

- Clear all past DTCs.
- Check if no DTC is stored after test drive.

**8. Estimated failure factors**

- Disconnection of CAN line.

## INSPECTION PROCEDURE: U0038

Refer to the "DIAGNOSIS CAN COMMUNICATION LINE" in the chapter "CAN COMMUNICATION".

# DTC: U0100

EN01H16F02040F03001078

## DTC: U0100 DeNOx ECU CAN communication (ECM)

INFORMATION

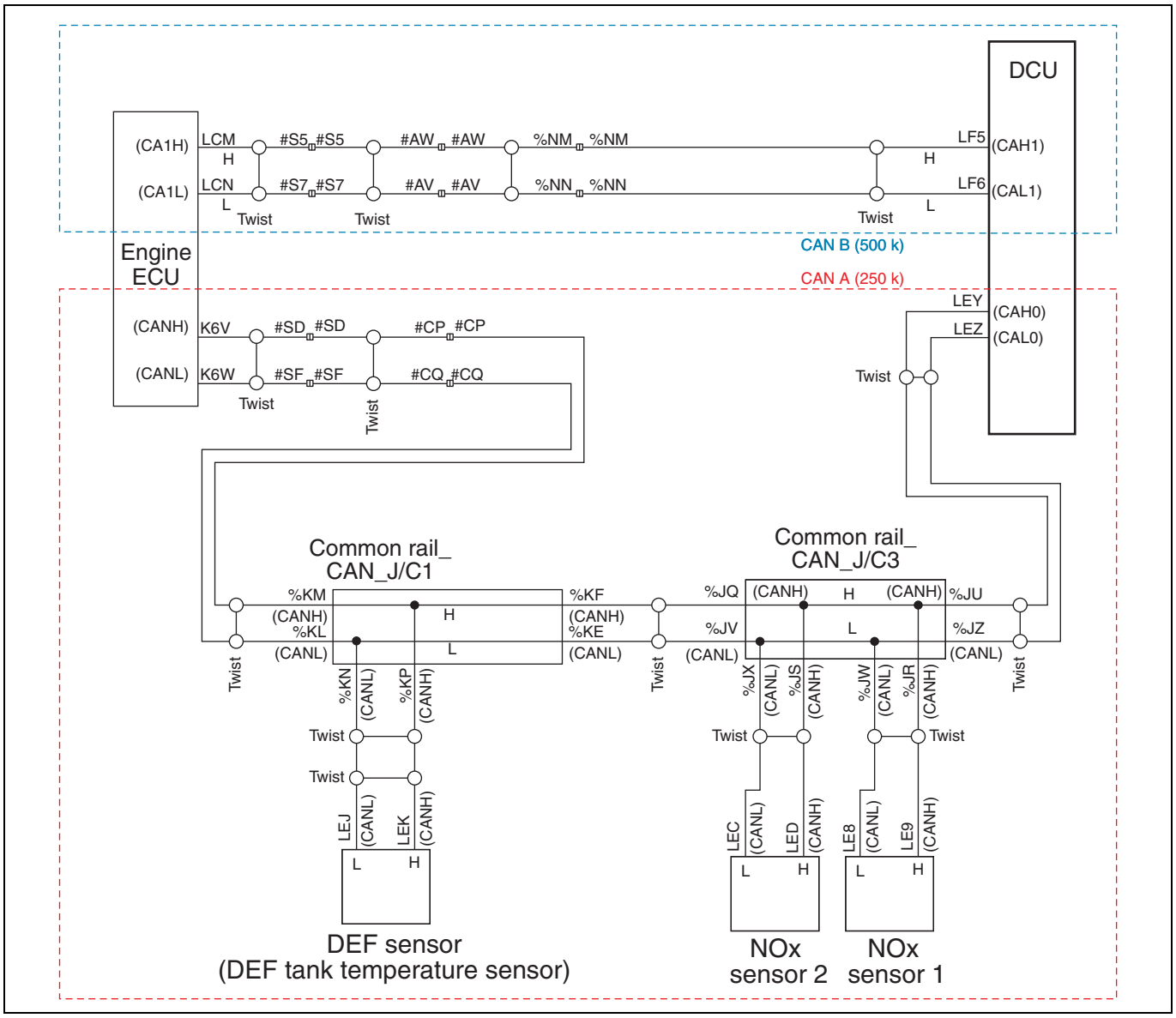


SAPH16F020400297

**1. Technical description**

- The DCU carries out CAN communication with the engine ECU via CAN circuit A (ENGINE CAN LINE/250 k) and CAN circuit B (DIAGNOSIS CAN LINE/500 k).

**<Description of malfunction>**

- CAN communication signal reception error is detected.

**2. DTC set condition**

(1) DTC detection condition
Starter switch ON.

(2) Judgement criteria
CAN communication signal from the engine ECU cannot be received.

**3. Reset condition**

- After having restored to the normal conditions.

**4. Indication, warning or system control regulation when the DTC is set.**

- DEF injection is restricted.
- NOx reduction quantity monitoring is aborted.

**5. Symptoms on the vehicle when the DTC is set**

**<Symptoms on the vehicle due to backup control (fail safe function)>**

- Exhaust gas purification function decline.

**<Symptoms on the vehicle due to malfunction>**

- –

**6. Pre-inspection work**

- Check if the battery voltage is in the normal range.

**7. After-inspection work**

- Clear all past DTCs.
- Check if no DTC is stored after test drive.

**8. Estimated failure factors**

- Looseness or poor contact of the connector
- DCU malfunction
- Engine ECU malfunction

## INSPECTION PROCEDURE: U0100

| 1 | Check the DTC detected (Engine) |
|---|---|

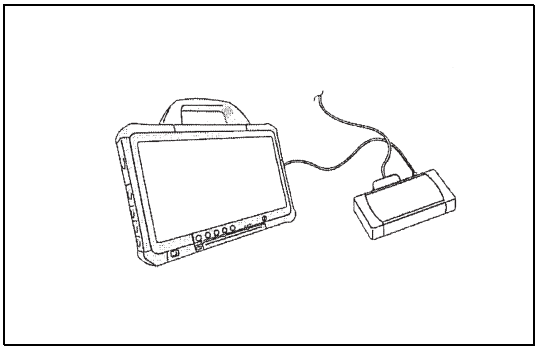

SAPH16F020400298

1. Connect the vehicle to HINO DX II .
2. Set the starter switch to the "ON" position.
3. Select [Engine] and check if the following CAN communication system DTCs have been detected.

   **CAN A LINE (ENGINE CAN LINE/250k)**
   **U010A, U010C, U029D, U029E, U0073, U010E, U02A2**

   **CAN B LINE (DIAGNOSIS CAN LINE/500k)**
   **U1001, U110A**

**Were the multiple CAN communication system DTCs detected?**

**YES**

**Considered failure of the main CAN communication line. Refer to "ENGINE CAN COMMINICATION LINE / CAN COMMUNICATION LINE MALFANCTION PART DETERMINATION TABLE" and "DIAGNOSIS CAN COMMINICATION LINE / CAN COMMUNICATION LINE MALFANCTION PART DETERMINATION TABLE" of CAN chapter, and inspect the diagnosed item of the detected DTC.**

**NO**

**Go to step 2.**

| 2 | Inspect the connector |
|---|---|

1. Check the connection of the joint connector No.30_J/C, Common rail_CAN_J/C3 and DCU connector (Looseness and poor contact).

**Was any failure found?**

**YES**

**Repair or replace the faulty part, and go to step 3.**

**NO**

**Connect securely, and go to step 3.**

| 3 | Check the DTC detected (DCU) |
|---|---|

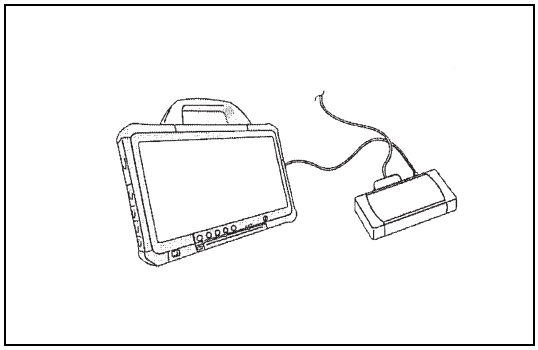

SAPH16F020400299

1. Set the starter switch to the "ON" position.
2. Select [DCU] and check if U0100 has been detected.

**Has DTC U0100 been detected?**

**YES**

**Replace the DCU.**
**Perform "After-inspection work" of INFORMATION section.**

**NO**

**Procedure completed.**
**Perform "After-inspection work" of INFORMATION section.**

# DTC: U029D

EN01H16F02040F03001079

## DTC: U029D DeNOx ECU CAN communication (NOx sensor (SCR upstream))

INFORMATION

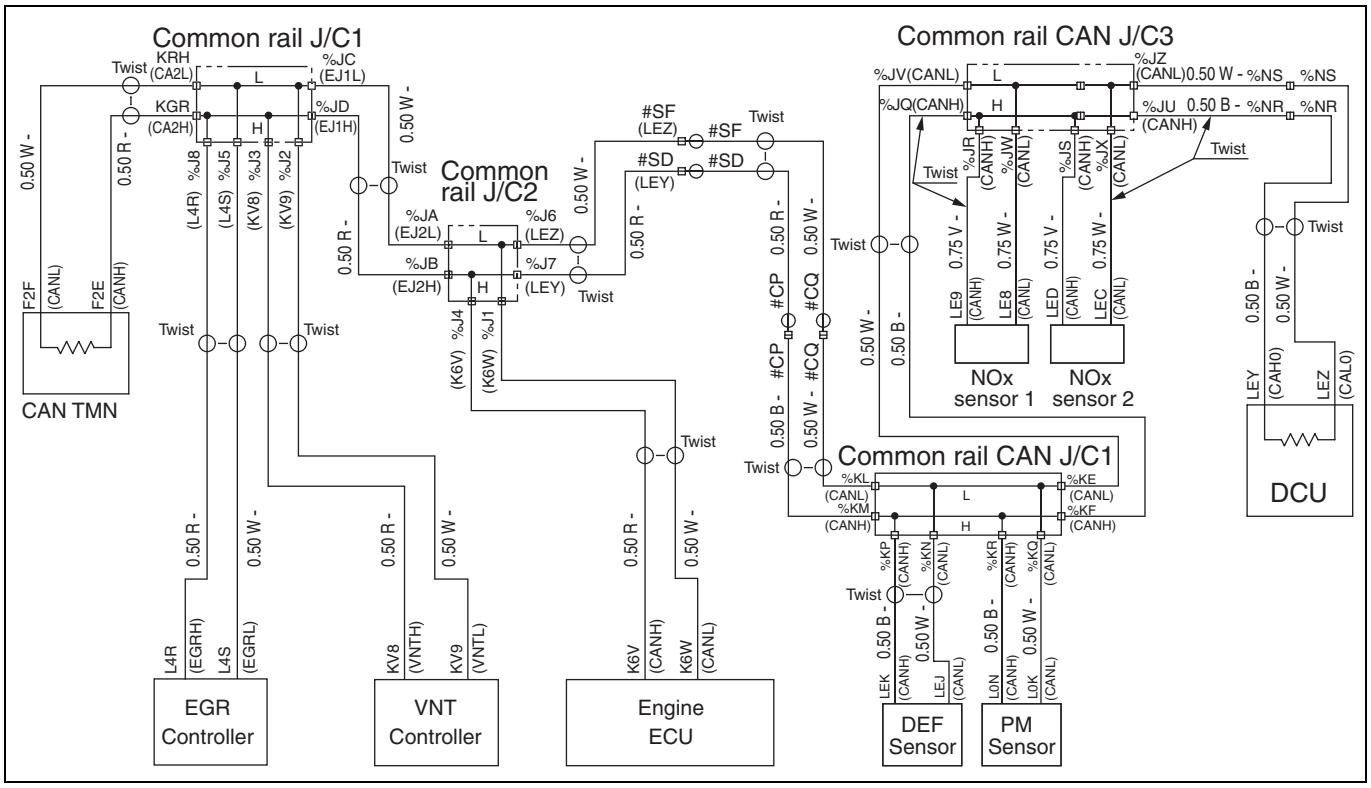


SAPH16F020400300

**1. Technical description**

- NOx sensor communicates with DCU via CAN.

**<Description of malfunction>**

- CAN message from NOx sensor 1 (SCR upstream) cannot be received.

**2. DTC set condition**

(1) DTC detection condition
Starter switch ON.
Continuously checked in the configured raster: [0] – 10
Continuously checked in the configured raster: [0] – 11
Continuously checked in the configured raster: [4] – 9
Continuously checked in the configured raster: [25] – 8
Continuously checked in the configured raster: [25] – 9

(2) Judgement criteria
CAN data from NOx sensor 1 (SCR upstream) is interrupted for 0.25 seconds

**3. Reset condition**

- After having restored to the normal conditions.

**4. Indication, warning or system control regulation when the DTC is set.**

- MIL: ON
- SCR malfunction light: ON
- If malfunction does not improve within 500 miles: Engine output is restricted.
- If malfunction does not improve within 2,000 miles: Vehicle speed is restricted.

**5. Symptoms on the vehicle when the DTC is set**

**<Symptoms on the vehicle due to backup control (fail safe function)>**

- Engine output is insufficient (when malfunction does not improve within 500 miles)
- Vehicle does not speed up (when malfunction does not improve within 2,000 miles)

**<Symptoms on the vehicle due to malfunction>**

- –

**6. Pre-inspection work**

- Check if the battery voltage is in the normal range.

**7. After-inspection work**

- Clear all past DTCs.
- Reset "Urea SCR related memory" by HINO DX II "Data monitor and Activation test".
- Check if no DTC is stored after test drive.

**8. Estimated failure factors**

- Poor connector contact or faulty connector fit
- Failure of NOx sensor 1 (SCR upstream)
- CAN line disconnection
- Crossed lines
- Abnormal external noise

## INSPECTION PROCEDURE: U029D

Refer to the "ENGINE CAN COMMUNICATION LINE" in the chapter "CAN COMMUNICATION".

# DTC: U029E

EN01H16F02040F03001080

## DTC: U029E DeNOx ECU CAN communication (NOx sensor (SCR downstream))

INFORMATION

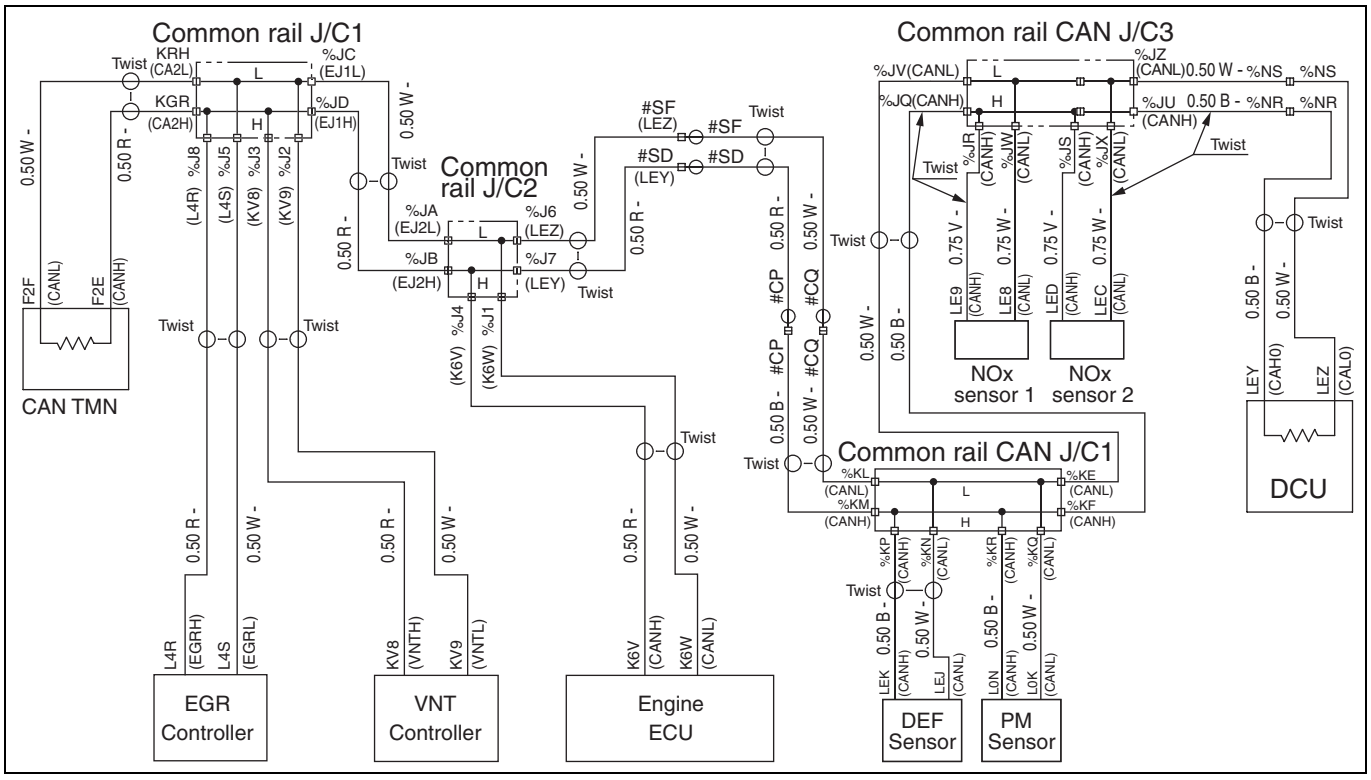


SAPH16F020400301

**1. Technical description**

- NOx sensor communicates with DCU via CAN.

**<Description of malfunction>**

- CAN message from NOx sensor 2 (SCR downstream) cannot be received.

**2. DTC set condition**

(1) DTC detection condition
Starter switch ON.
Continuously checked in the configured raster: [1] – 0
Continuously checked in the configured raster: [1] – 1

(2) Judgement criteria
CAN data from NOx sensor 2 (SCR downstream) is interrupted for 0.25 seconds

**3. Reset condition**

- After having restored to the normal conditions.

**4. Indication, warning or system control regulation when the DTC is set.**

- MIL: ON
- SCR malfunction light: ON
- DEF injection is restricted.
- NOx reduction quantity monitoring is aborted.
- If malfunction does not improve within 500 miles: engine output is restricted.
- If malfunction does not improve within 2,000 miles: vehicle speed is restricted.

**5. Symptoms on the vehicle when the DTC is set**

**<Symptoms on the vehicle due to backup control (fail safe function)>**

- NOx reduction function is prevented.
- Engine output is insufficient (when malfunction does not improve within 500 miles)
- Vehicle does not speed up (when malfunction does not improve within 2,000 miles)

**<Symptoms on the vehicle due to malfunction>**

- –

**6. Pre-inspection work**

- Check if the battery voltage is in the normal range.

**7. After-inspection work**

- Clear all past DTCs.
- Reset "Urea SCR related memory" by HINO DX II "Data monitor and Activation test".
- Check if no DTC is stored after test drive.

**8. Estimated failure factors**

- Poor connector contact or faulty connector fit
- Failure of NOx sensor 2 (SCR downstream)
- CAN line disconnection
- Abnormal external noise
- Crossed lines

## INSPECTION PROCEDURE: U029E

Refer to the "ENGINE CAN COMMUNICATION LINE" in the chapter "CAN COMMUNICATION".

# DTC: U02A2

EN01H16F02040F03001081

## DTC: U02A2 Communication disrupt (DEF tank sensor)

INFORMATION

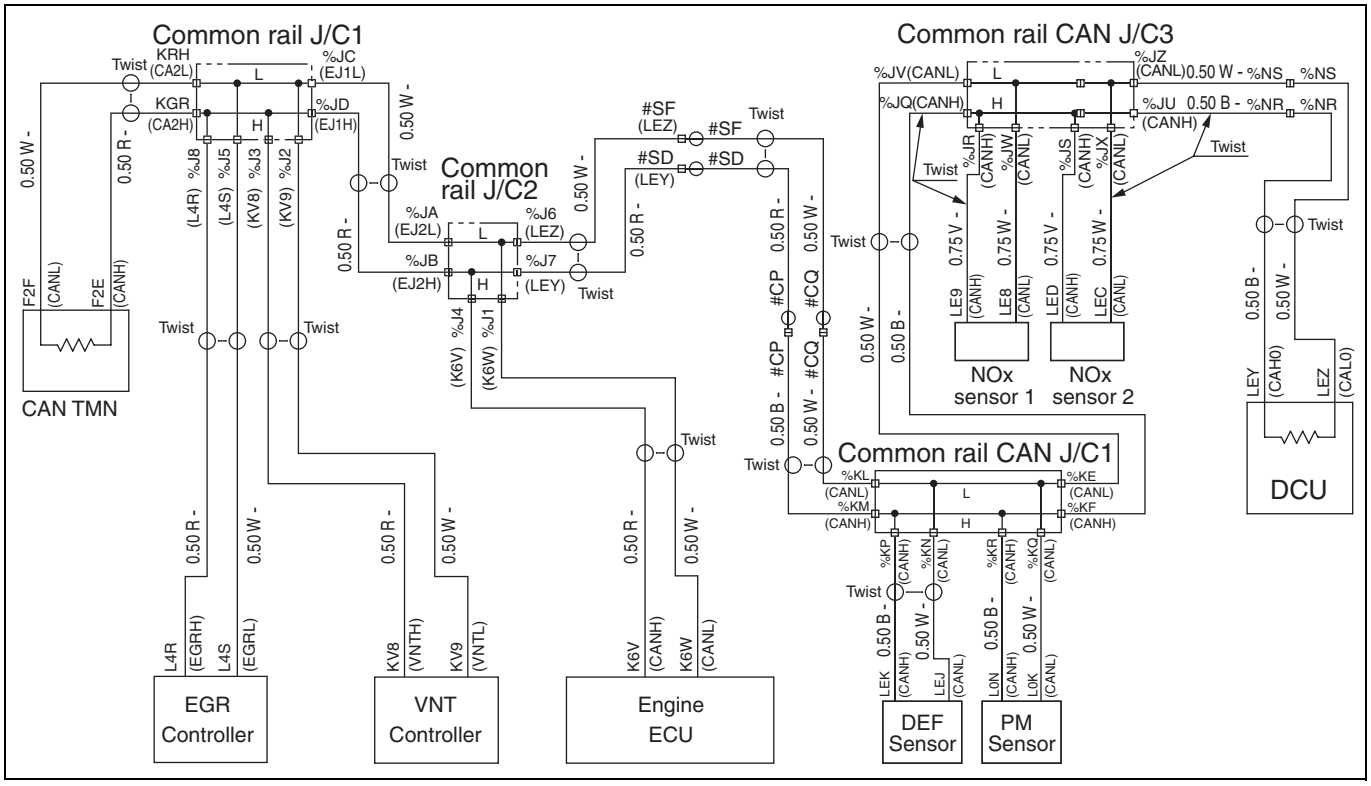


SAPH16F020400302

**1. Technical description**

- DEF tank sensor communicates with DCU via CAN.

**<Description of malfunction>**

- CAN communication with DEF sensor is interrupted.

**2. DTC set condition**

(1) DTC detection condition
Starter switch ON.
DCU power supply voltage is 11 V – 16 V.

(2) Judgement criteria
CAN data from DEF sensor are not received for at least 30 seconds.

**3. Reset condition**

- After normal operation is restored and the starter switch is turned OFF.

**4. Indication, warning or system control regulation when the DTC is set.**

- MIL: ON
- SCR malfunction light: ON
- If malfunction does not improve within 500 miles: engine output is restricted.
- If malfunction does not improve within 2,000 miles: vehicle speed is restricted.

**5. Symptoms on the vehicle when the DTC is set**

**<Symptoms on the vehicle due to backup control (fail safe function)>**

- Engine output is insufficient (when malfunction does not improve within 500 miles)
- Vehicle does not speed up (when malfunction does not improve within 2,000 miles)

**<Symptoms on the vehicle due to malfunction>**

- –

**6. Pre-inspection work**

- Check if the battery voltage is in the normal range.

**7. After-inspection work**

- Clear all past DTCs.
- Check if no DTC is stored after test drive.

**8. Estimated failure factors**

- CAN circuit failure (engine CAN)
- DEF sensor failure
- DEF sensor power supply/GND harness disconnection or short-circuit

## INSPECTION PROCEDURE: U02A2

Refer to the "ENGINE CAN COMMUNICATION LINE" in the chapter "CAN COMMUNICATION".

# BRAKE CONTROL SYSTEM (ABS:HYDRAULIC (E VERSION))

9-001

**ABS ..... 9-2**
TROUBLESHOTTING ..... 9-2

# ABS

## TROUBLESHOTTING

EN01H16F06080F03001001

### BEFORE YOU BEGIN

This manual provides maintenance and service instructions for Meritor WABCO's hydraulic ABS for medium-duty trucks, buses and motor home chassis. Before you begin procedures:

1. Read and understand all instructions and procedures before you begin to service components.
2. Read and observe all Caution and Warning safety alerts that precede instructions or procedures you will perform. These alerts help to avoid damage to components, serious personal injury, or both.
3. Follow your company's maintenance and service, installation, and diagnostics guidelines.
4. Use special tools when required to help avoid serious personal injury and damage to components.

#### 1. SAFETY ALERTS, TORQUE SYMBOL AND NOTES

| | |
|---|---|
| ⚠ **WARNING** | A Warning alerts you to an instruction or procedure that you must follow exactly to avoid serious personal injury and damage to components. |
| ⚠ **CAUTION** | A Caution alerts you to an instruction or procedure that you must follow exactly to avoid damage to components and possible serious injury. |
| **NOTICE** | A Note provides information or suggestions that help you correctly service a component. |

#### 2. ACCESS INFORMATION ON ARVINMERITOR'S WEB SITE

Additional maintenance and service information for ArvinMeritor's commercial vehicle systems component lineup is also available at www.arvinmeritor.com.

To access information, click on Products & Services/Tech Library Icon/ HVS Publications. The screen will display an index of publications by type.

## ASBESTOS FIBERS WARNING

***The following procedures for servicing brakes are recommended to reduce exposure to asbestos fiber dust, a cancer and lung disease hazard. Material Safety Data Sheets are available from ArvinMeritor.***

### Hazard Summary

Because some brake linings contain asbestos, workers who service brakes must understand the potential hazards of asbestos and precautions for reducing risks. Exposure to airborne asbestos dust can cause serious and possibly fatal diseases, including asbestosis (a chronic lung disease) and cancer, principally lung cancer and mesothelioma (a cancer of the lining of the chest or abdominal cavities). Some studies show that the risk of lung cancer among persons who smoke and who are exposed to asbestos is much greater than the risk for non-smokers. Symptoms of these diseases may not become apparent for 15, 20 or more years after the first exposure to asbestos.

Accordingly, workers must use caution to avoid creating and breathing dust when servicing brakes. Specific recommended work practices for reducing exposure to asbestos dust follow. Consult your employer for more details.

### Recommended Work Practices

1. Separate Work Areas. Whenever feasible, service brakes in a separate area away from other operations to reduce risks to unprotected persons. OSHA has set a maximum allowable level of exposure for asbestos of 0.1 f/cc as an 8-hour time-weighted average and 1.0 f/cc averaged over a 30-minute period. Scientists disagree, however, to what extent adherence to the maximum allowable exposure levels will eliminate the risk of disease that can result from inhaling asbestos dust. OSHA requires that the following sign be posted at the entrance to areas where exposures exceed either of the maximum allowable levels:

**DANGER: ASBESTOS**
**CANCER AND LUNG DISEASE HAZARD**
**AUTHORIZED PERSONNEL ONLY**
**RESPIRATORS AND PROTECTIVE CLOTHING**
**ARE REQUIRED IN THIS AREA.**

2. Respiratory Protection. Wear a respirator equipped with a high-efficiency (HEPA) filter approved by NIOSH or MSHA for use with asbestos at all times when servicing brakes, beginning with the removal of the wheels.

3. Procedures for Servicing Brakes.

a. Enclose the brake assembly within a negative pressure enclosure. The enclosure should be equipped with a HEPA vacuum and worker arm sleeves. With the enclosure in place, use the HEPA vacuum to loosen and vacuum residue from the brake parts.

b. As an alternative procedure, use a catch basin with water and a biodegradable, non-phosphate, water-based detergent to wash the brake drum or rotor and other brake parts. The solution should be applied with low pressure to prevent dust from becoming airborne. Allow the solution to flow between the brake drum and the brake support or the brake rotor and caliper. The wheel hub and brake assembly components should be thoroughly wetted to suppress dust before the brake shoes or brake pads are removed. Wipe the brake parts clean with a cloth.

c. If an enclosed vacuum system or brake washing equipment is not available, employers may adopt their own written procedures for servicing brakes, provided that the exposure levels associated with the employer's procedures do not exceed the levels associated with the enclosed vacuum system or brake washing equipment. Consult OSHA regulations for more details.

d. Wear a respirator equipped with a HEPA filter approved by NIOSH or MSHA for use with asbestos when grinding or machining brake linings. In addition, do such work in an area with a local exhaust ventilation system equipped with a HEPA filter.

e. **NEVER** use compressed air by itself, dry brushing, or a vacuum not equipped with a HEPA filter when cleaning brake parts or assemblies. **NEVER** use carcinogenic solvents, flammable solvents, or solvents that can damage brake components as wetting agents.

4. Cleaning Work Areas. Clean work areas with a vacuum equipped with a HEPA filter or by wet wiping. **NEVER** use compressed air or dry sweeping to clean work areas. When you empty vacuum cleaners and handle used rags, wear a respirator equipped with a HEPA filter approved by NIOSH or MSHA for use with asbestos. When you replace a HEPA filter, wet the filter with a fine mist of water and dispose of the used filter with care.

5. Worker Clean-Up. After servicing brakes, wash your hands before you eat, drink or smoke. Shower after work. Do not wear work clothes home. Use a vacuum equipped with a HEPA filter to vacuum work clothes after they are worn. Launder them separately. Do not shake or use compressed air to remove dust from work clothes.

6. Waste Disposal. Dispose of discarded linings, used rags, cloths and HEPA filters with care, such as in sealed plastic bags. Consult applicable EPA, state and local regulations on waste disposal.

### Regulatory Guidance

References to OSHA, NIOSH, MSHA, and EPA, which are regulatory agencies in the United States, are made to provide further guidance to employers and workers employed within the United States. Employers and workers employed outside of the United States should consult the regulations that apply to them for further guidance.

## NON-ASBESTOS FIBERS WARNING

***The following procedures for servicing brakes are recommended to reduce exposure to non-asbestos fiber dust, a cancer and lung disease hazard. Material Safety Data Sheets are available from ArvinMeritor.***

### Hazard Summary

Most recently manufactured brake linings do not contain asbestos fibers. These brake linings may contain one or more of a variety of ingredients, including glass fibers, mineral wool, aramid fibers, ceramic fibers and silica that can present health risks if inhaled. Scientists disagree on the extent of the risks from exposure to these substances. Nonetheless, exposure to silica dust can cause silicosis, a non-cancerous lung disease. Silicosis gradually reduces lung capacity and efficiency and can result in serious breathing difficulty. Some scientists believe other types of non-asbestos fibers, when inhaled, can cause similar diseases of the lung. In addition, silica dust and ceramic fiber dust are known to the State of California to cause lung cancer. U.S. and international agencies have also determined that dust from mineral wool, ceramic fibers and silica are potential causes of cancer.

Accordingly, workers must use caution to avoid creating and breathing dust when servicing brakes. Specific recommended work practices for reducing exposure to non-asbestos dust follow. Consult your employer for more details.

### Recommended Work Practices

1. Separate Work Areas. Whenever feasible, service brakes in a separate area away from other operations to reduce risks to unprotected persons.

2. Respiratory Protection. OSHA has set a maximum allowable level of exposure for silica of 0.1 mg/m$^3$ as an 8-hour time-weighted average. Some manufacturers of non-asbestos brake linings recommend that exposures to other ingredients found in non-asbestos brake linings be kept below 1.0 f/cc as an 8-hour time-weighted average. Scientists disagree, however, to what extent adherence to these maximum allowable exposure levels will eliminate the risk of disease that can result from inhaling non-asbestos dust.

Therefore, wear respiratory protection at all times during brake servicing, beginning with the removal of the wheels. Wear a respirator equipped with a high-efficiency (HEPA) filter approved by NIOSH or MSHA, if the exposure levels may exceed OSHA or manufacturer's recommended maximum levels. Even when exposures are expected to be within the maximum allowable levels, wearing such a respirator at all times during brake servicing will help minimize exposure.

3. Procedures for Servicing Brakes.

a. Enclose the brake assembly within a negative pressure enclosure. The enclosure should be equipped with a HEPA vacuum and worker arm sleeves. With the enclosure in place, use the HEPA vacuum to loosen and vacuum residue from the brake parts.

b. As an alternative procedure, use a catch basin with water and a biodegradable, non-phosphate, water-based detergent to wash the brake drum or rotor and other brake parts. The solution should be applied with low pressure to prevent dust from becoming airborne. Allow the solution to flow between the brake drum and the brake support or the brake rotor and caliper. The wheel hub and brake assembly components should be thoroughly wetted to suppress dust before the brake shoes or brake pads are removed. Wipe the brake parts clean with a cloth.

c. If an enclosed vacuum system or brake washing equipment is not available, carefully clean the brake parts in the open air. Wet the parts with a solution applied with a pump-spray bottle that creates a fine mist. Use a solution containing water, and, if available, a biodegradable, non-phosphate, water-based detergent. The wheel hub and brake assembly components should be thoroughly wetted to suppress dust before the brake shoes or brake pads are removed. Wipe the brake parts clean with a cloth.

d. Wear a respirator equipped with a HEPA filter approved by NIOSH or MSHA when grinding or machining brake linings. In addition, do such work in an area with a local exhaust ventilation system equipped with a HEPA filter.

e. **NEVER** use compressed air by itself, dry brushing, or a vacuum not equipped with a HEPA filter when cleaning brake parts or assemblies. **NEVER** use carcinogenic solvents, flammable solvents, or solvents that can damage brake components as wetting agents.

4. Cleaning Work Areas. Clean work areas with a vacuum equipped with a HEPA filter or by wet wiping. **NEVER** use compressed air or dry sweeping to clean work areas. When you empty vacuum cleaners and handle used rags, wear a respirator equipped with a HEPA filter approved by NIOSH or MSHA, to minimize exposure. When you replace a HEPA filter, wet the filter with a fine mist of water and dispose of the used filter with care.

5. Worker Clean-Up. After servicing brakes, wash your hands before you eat, drink or smoke. Shower after work. Do not wear work clothes home. Use a vacuum equipped with a HEPA filter to vacuum work clothes after they are worn. Launder them separately. Do not shake or use compressed air to remove dust from work clothes.

6. Waste Disposal. Dispose of discarded linings, used rags, cloths and HEPA filters with care, such as in sealed plastic bags. Consult applicable EPA, state and local regulations on waste disposal.

### Regulatory Guidance

References to OSHA, NIOSH, MSHA, and EPA, which are regulatory agencies in the United States, are made to provide further guidance to employers and workers employed within the United States. Employers and workers employed outside of the United States should consult the regulations that apply to them for further guidance.

## SYSTEM LAYOUT

A typical Meritor WABCO Hydraulic ABS is illustrated below.

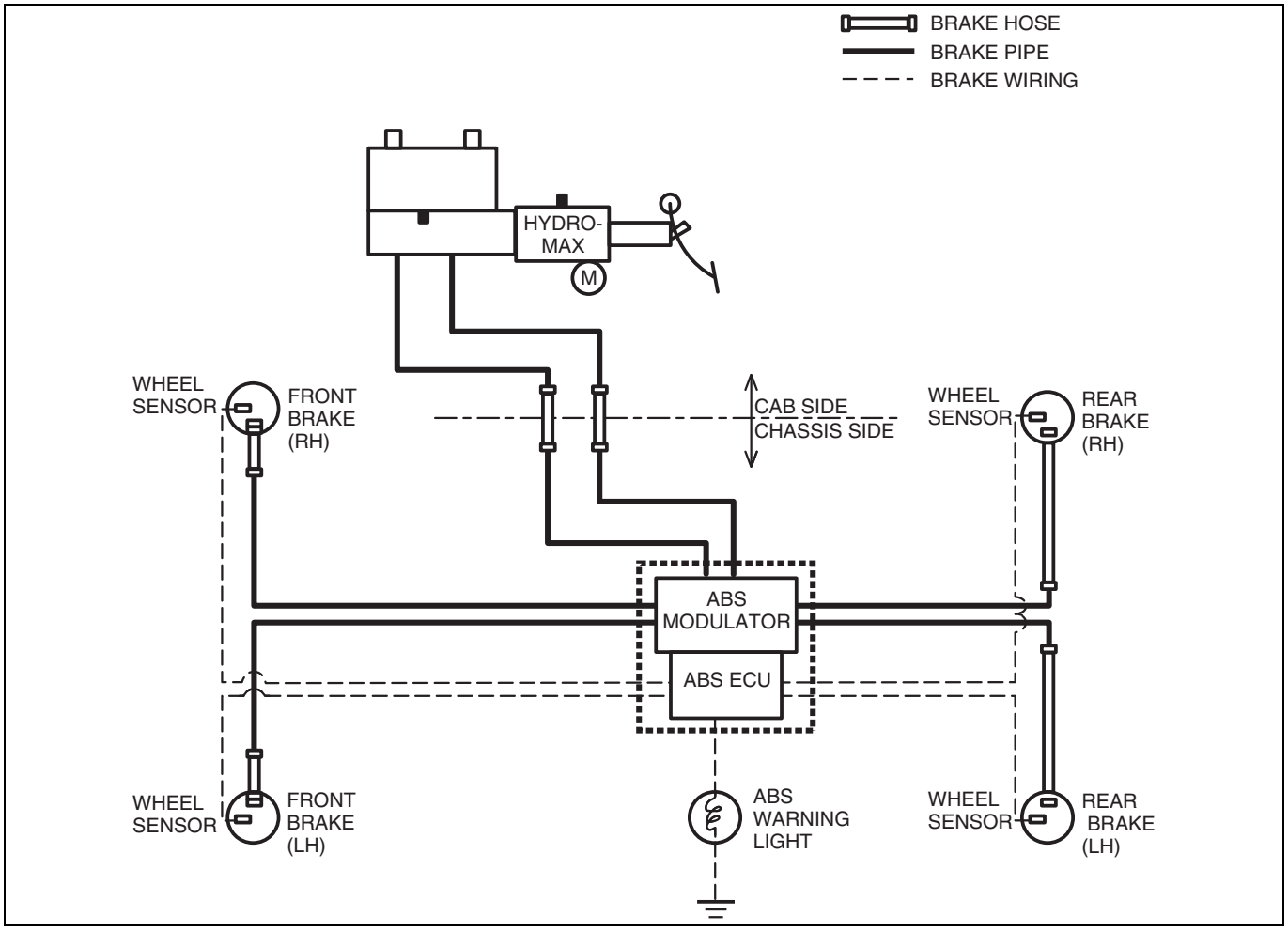


SAPH16F060800002

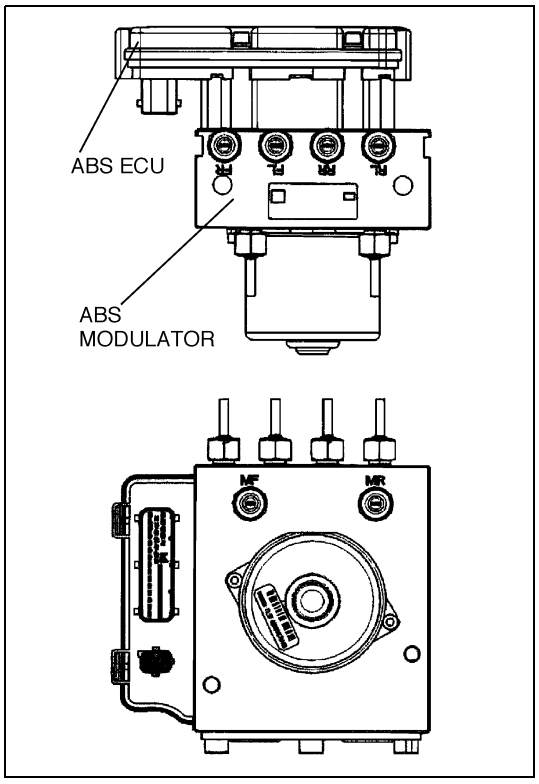


SAPH16F060800003

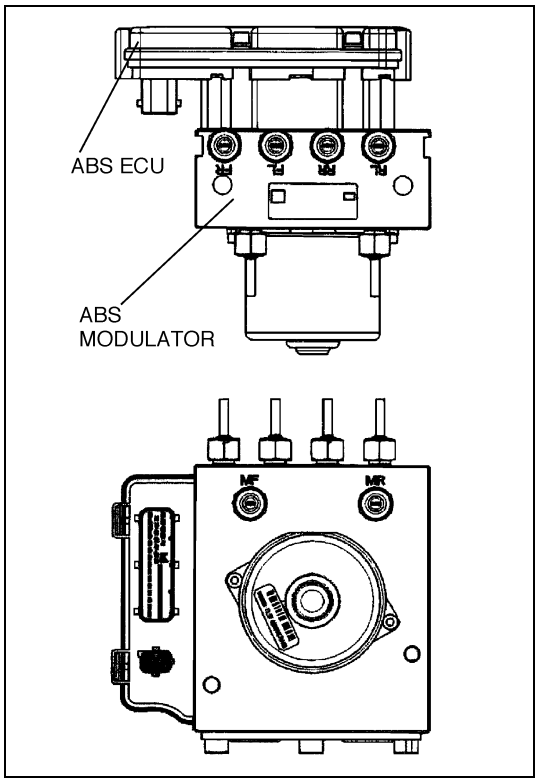


SAPH16F060800004

## SYSTEM COMPONENTS

The following components make up the Meritor WABCO Hydraulic ABS.

### ELECTRONIC CONTROL UNIT (ECU)

- Processes sensor signals and generates solenoid valve commands to reduce, maintain or reapply brake pressure.
- This ECU is integrated with the ABS modulator.

### MODULATOR ASSEMBLY

- Houses the ABS solenoid control valves (one inlet valve and one outlet valve per wheel), a pump motor and two accumulators.
- Contains brake fluid and must be handled with appropriate care. It should not be exposed to impact loads, excessive vibrations or compressed air blown into the hydraulic ports.

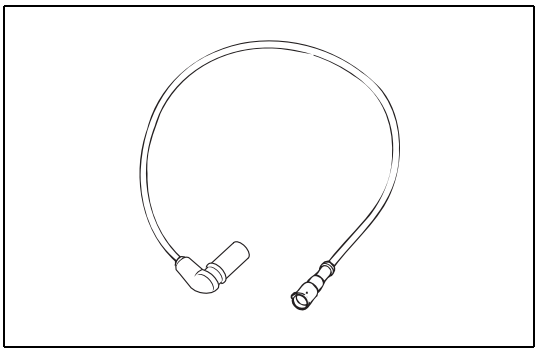

SAPH16F060800005

**SENSOR WITH MOLDED SOCKET**

- Measures the speed of a tooth wheel rotating with the vehicle wheel.
- Produces an output voltage proportional to wheel speed.

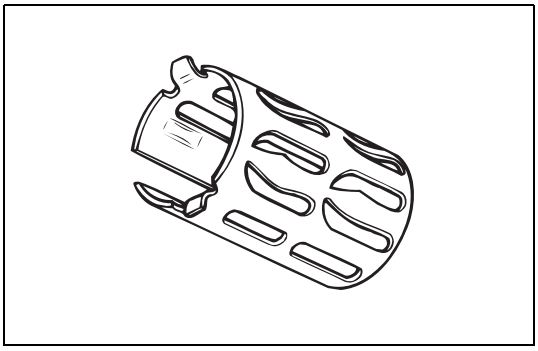

SAPH16F060800006

**SENSOR SPRING CLIP**

- Holds the wheel speed sensor in close proximity to the tooth wheel.

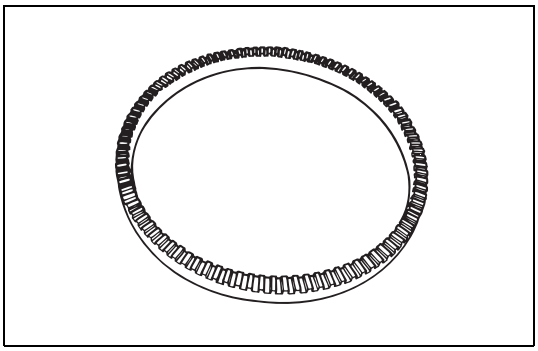

SAPH16F060800007

**TOOTH WHEEL**

- A machined or stamped ring mounted to a machined surface on the hub of each ABS-monitored wheel.

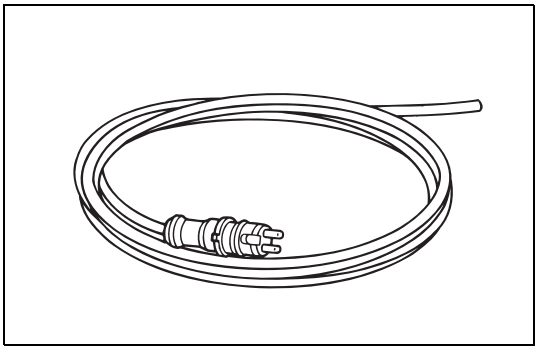

SAPH16F060800008

**SENSOR EXTENSION CABLES**

- Two-wire cable with molded-on connector.
- Connects the wheel speed sensor to the ECU.

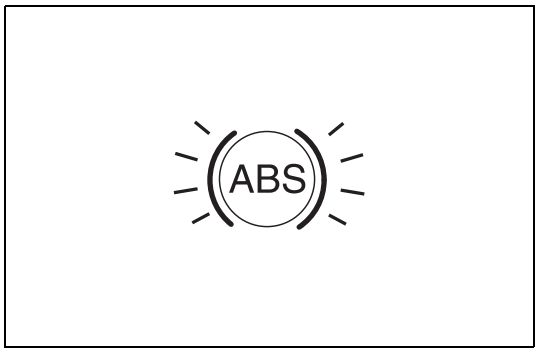


SAPH16F060800009

**ABS INDICATOR LIGHT**

- Located on vehicle dash.
- Alerts drivers to a possible system fault.
- ABS indicator light is not provided by Meritor WABCO.

## GENERAL INFORMATION

There is no regularly scheduled maintenance required for Meritor WABCO E Version Hydraulic ABS. However, ABS does not change current vehicle maintenance requirements. For example, it is important that the vehicle brake fluid level be correctly maintained.

## SYSTEM WIRING INFORMATION

**NOTICE**

**Wiring may vary, according to the vehicle. Refer to the vehicle specifications for specific wiring diagrams. A typical Meritor WABCO 4S/4M Hydraulic ABS wiring diagram.**

**1. PIN NUMBERS AND LOCATIONS**

(1) PIN IDENTIFICATION FOR WIRE HARNESS CONNECTORS TO THE ECU

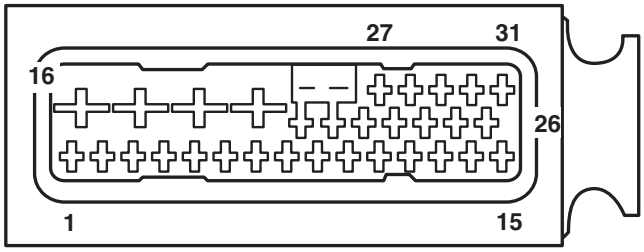


**(9511)**

**Count from the pin number at the end of each row, identify pin assembly to measure. Connector view shows the back of the connector.**

| Pin # | Circuit Label |
|---|---|
| 1 | Ignition 12v |
| 2 | 3rd Brake Relay (optional) |
| 3 | Not Used |
| 4 | Not Used |
| 5 | Not Used |
| 6 | Reference Ground |
| 7 | Not Used |
| 8 | Not Used |
| 9 | Not Used |
| 10 | Not Used |
| 11 | Not Used |
| 12 | Not Used |
| 13 | Not Used |
| 14 | J1939 + High - (optional) |
| 15 | J1939 - Low - (optional) |

| Pin # | Circuit Label |
|---|---|
| 16 | Pump Motor Supply 12v+ |
| 17 | Solenoid Valve Supply 12v+ |
| 18 | Pump Motor Ground -Gnd |
| 19 | Solenoid Valve Ground -Gnd |
| 20 | Not used |
| 21 | ABS Warning Light Relay |
| 22 | Rear Right Wheel Speed Sensor |
| 23 | Rear Left Wheel Speed Sensor |
| 24 | Front Left Wheel Speed Sensor |
| 25 | Front Right Wheel Speed Sensor |
| 26 | J1587 Diag. B + LOW |
| 27 | Rear Right Wheel Speed Sensor |
| 28 | Rear Left Wheel Speed Sensor |
| 29 | Front Left Wheel Speed Sensor |
| 30 | Front Right Wheel Speed Sensor |
| 31 | J1587 Diag. A + High |

SAPH16F060800010

## 2. E VERSION HYDRAULIC ABS WIRING DIAGRAM

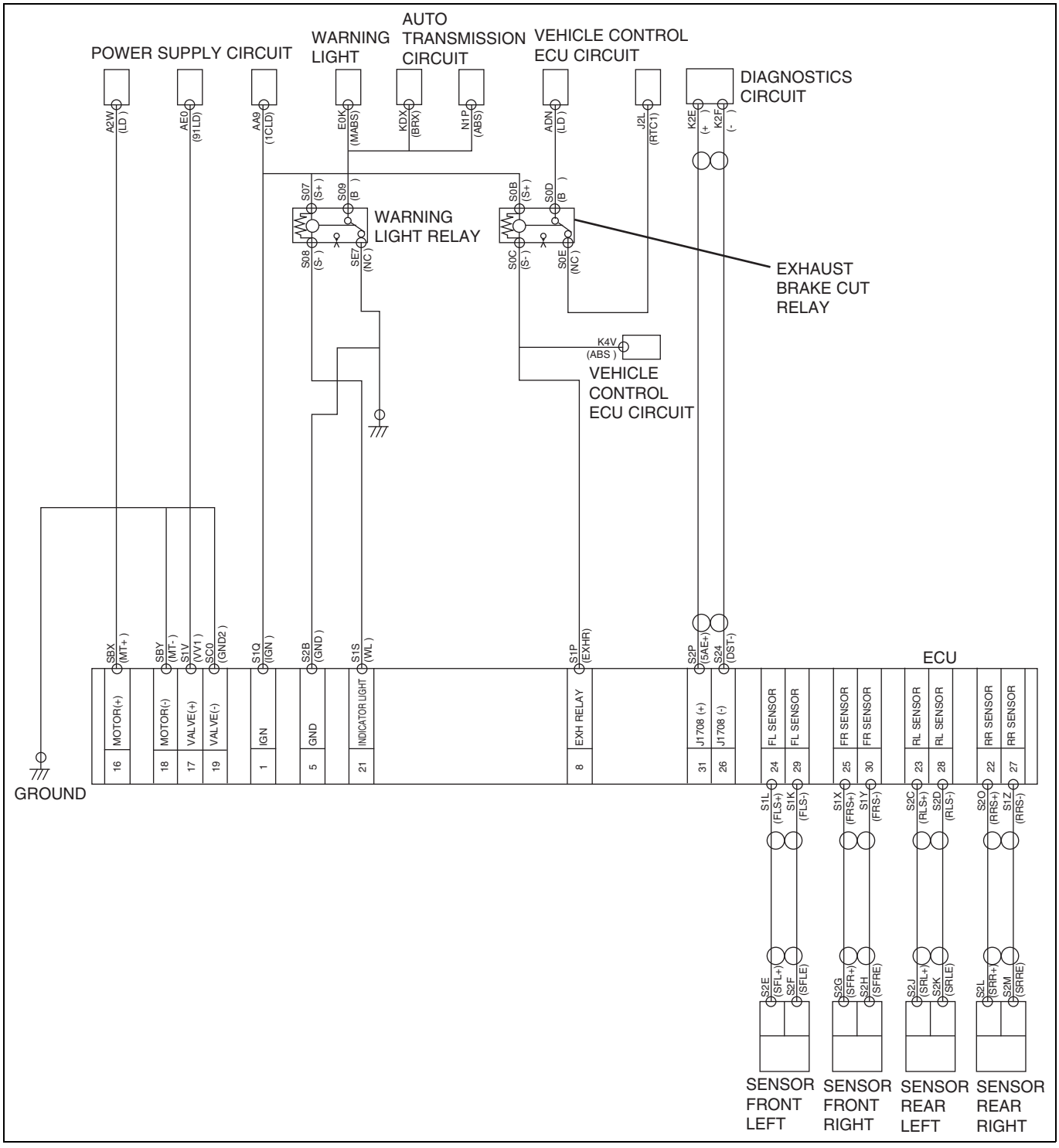


SAPH16F060800011

## SYSTEM DIAGNOSTICS

Use Meritor WABCO's PC-based diagnostic program, TOOLBOX Software.

### 1. TOOLBOX SOFTWARE

**NOTICE**

**For complete instructions for using this program, refer to the User's Manual, TP-99102. Contact Meritor WABCO at 800-535-5560 for information about TOOLBOX Software.**

**If you have TOOLBOX Software installed on your computer, use it to identify system faults. Then, follow the on-screen repair information to make the necessary repairs or replacements.**

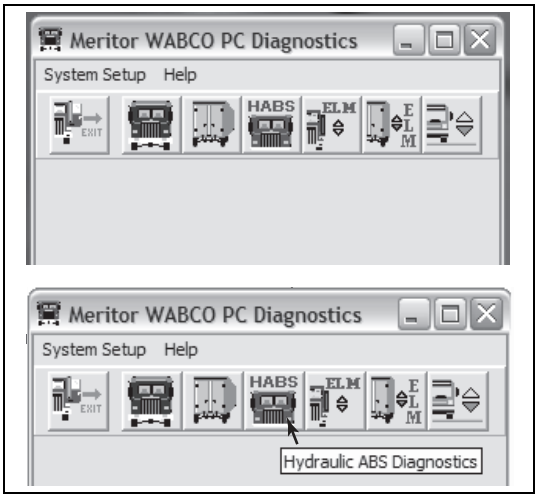


SAPH16F060800012

**To display Hydraulic ABS faults, use the pull-down menu or the HABS (Hydraulic ABS) icon to select HABS from the Main Menu. The HABS Main Menu will appear.**

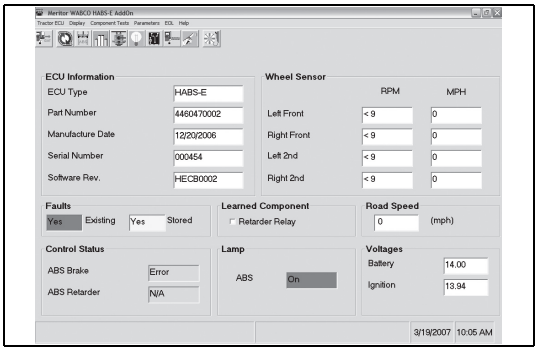


SAPH16F060800013

Select the View ECU Faults icon or select Display Faults to use the pull-down menu.

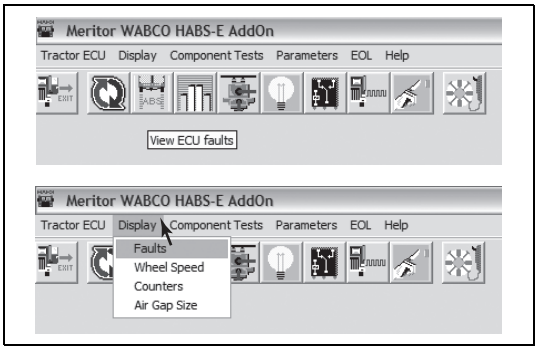


SAPH16F060800014

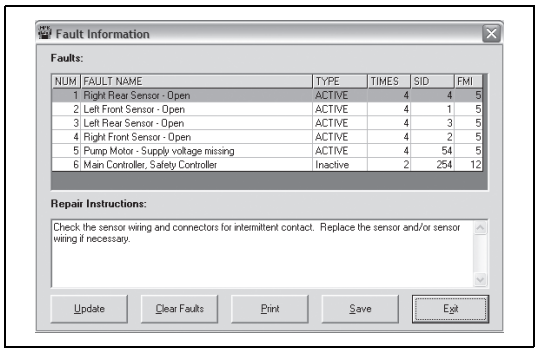


SAPH16F060800015

This will display the **Fault Information** screen.

The **Fault Information** Screen contains a description of the fault. Repair instructions for each fault appear at the bottom of the screen.

Faults that occur after the screen is displayed will not appear until a screen update is requested. Use the UPDATE button to refresh the fault information table.

After making the necessary repairs, use the CLEAR FAULTS button to clear the fault. Use the update button to refresh the fault information table and display the new list of faults.

**2. TESTING THE SYSTEM**

This section of the manual contains information for testing the hydraulic ABS with TOOLBOX Software, as well as procedures for conducting standard air and electrical tests.

**⚠ WARNING**

**To prevent serious eye injury, always wear safe eye protection when you perform vehicle maintenance or service.**

**Exhaust gas contains poison. When testing a vehicle with the engine running, test in a well-ventilated area or route the exhaust hose outside.**

**To avoid serious personal injury, keep away, and keep test equipment away, from all moving or hot engine parts.**

Refer to, and follow, the vehicle manufacturer's Warnings, Cautions and Service Procedures.

When testing, set the parking brake and place the gear selector in NEUTRAL (manual transmission) or PARK (automatic transmission) unless otherwise directed.

(1) Meritor WABCO TOOLBOX™ Software

Use TOOLBOX™ Software to verify the activation of various system components:

- Turn valves, pump and retarder relay on and off (Valve Activation Menu).
- Turn ABS warning light on and off (Miscellaneous Output Activation Menu).

**NOTICE**

- **TOOLBOX™ Software must be connected to the vehicle and the vehicle ignition must be ON in order to display information.**
- **For complete instructions for using this program, refer to the User's Manual, TP-99102. Contact Meritor WABCO at 800-535-5560 for information about TOOLBOX™ Software.**

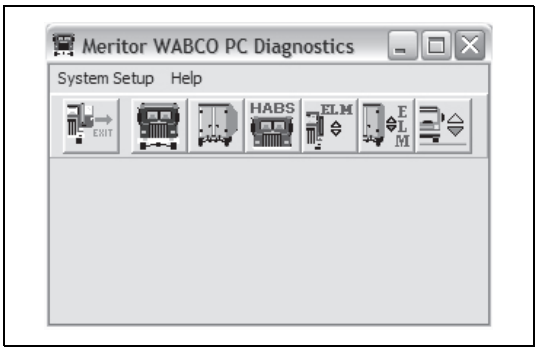


SAPH16F060800016

(2) E Version Hydraulic ABS Menus and Toolbars
Select Hydraulic ABS from the TOOLBOX™ **Main Menu**. TOOLBOX™ senses the type of ECU being used and displays the **HABS Main Screen**.

(3) Main Screen
This screen provides icons and pull-down menu task selections. It also provides information about the current status of Meritor WABCO HABS.
ECU information is read once from the ECU and does not change. All other information (e.g., wheel sensors, voltages and fault information) is read and updated continuously.

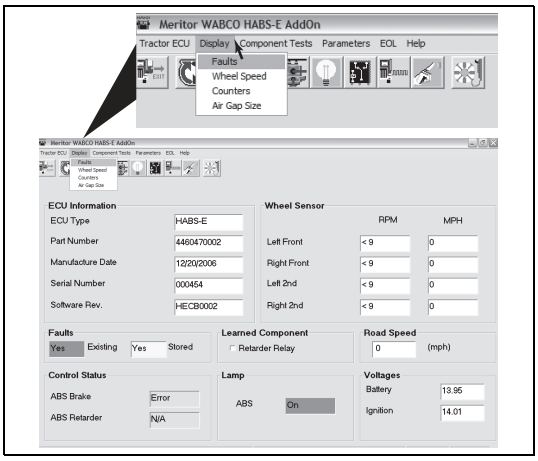


SAPH16F060800017

(4) Display
Select **Display** from the HABS **Main Screen**. A pull-down menu will appear.

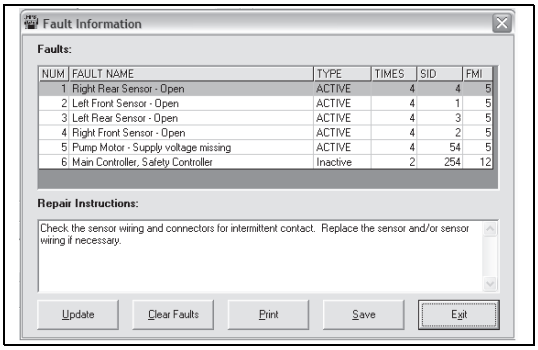


SAPH16F060800018

(5) Faults
Select **Faults** to display the **Fault Information** screen.
The **Fault Information** screen contains a description of each fault, including the type of fault (Active or Stored), number of occurrences, SID and FMI number. Repair instructions for the fault appear at the bottom of the screen.

Faults that occur after the screen is displayed will not appear until a screen update is requested. Use the **Update** button at the bottom of the screen to refresh the fault information table and display a new list of faults.

After making any required repairs, use the **Clear Faults** button to clear the fault. Clear each fault as it is repaired. Cycle the ignition after clearing the faults.

Use the **Save** or **Print** button to save or print the fault information data. Select **Exit** to close this section.

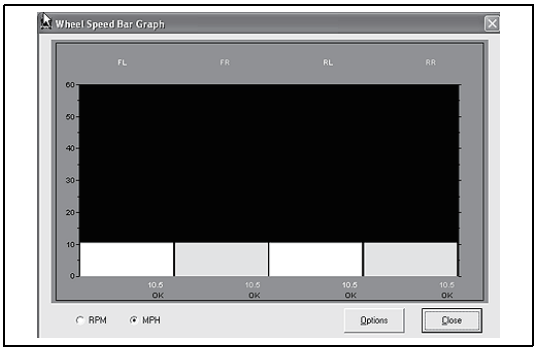


SAPH16F060800019

(6) Wheel Speed
Select **Wheel Speed** to display the **Wheel Speed** screen.
Use the **Wheel Speed** screen to verify that sensors are connected at each wheel. Speed at a sensed wheel (FL, FR, RL, RR) indicates sensors are installed, but does not verify correct sensor installation.

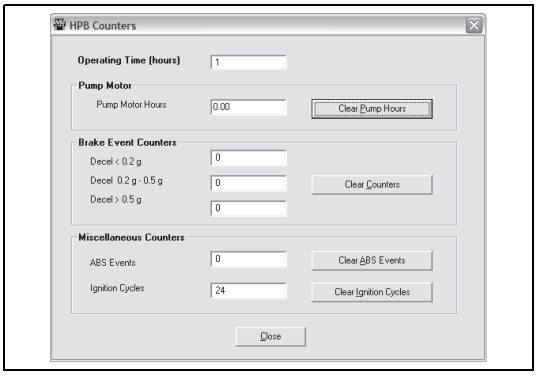


SAPH16F060800020

(7) Counters
Select **Counters** to display the **Counters** screen.
The **Counters** screen provides an overview of HABS component performance (pump hours, brake events, etc.) as well as general vehicle activity such as ignition cycles. Occurrences displayed on this screen accumulate until the **Clear** button is selected.

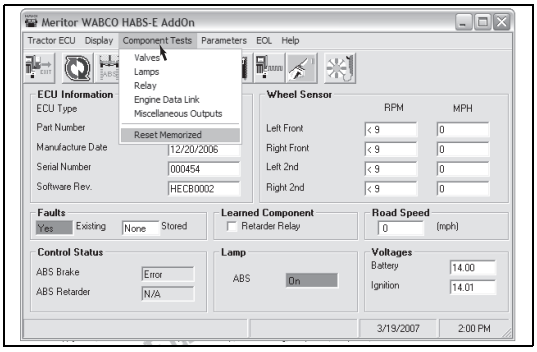


SAPH16F060800021

(8) Component Tests
Select **Component Tests** from the HABS **Main Screen**. A pull-down menu will appear.

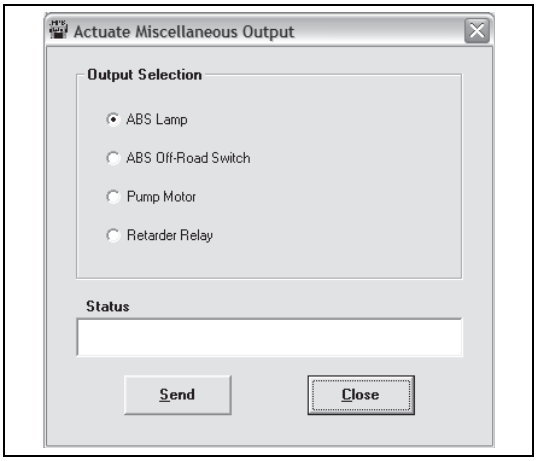


SAPH16F060800022

(9) Miscellaneous Outputs
Select **Miscellaneous Outputs** to display the **Actuate Miscellaneous Outputs** test screen.

**NOTICE**
**Use TOOLBOX™ Software to test the following components: Retarder Relay, Brake Light Relay, Supply Valve, Cut-Off Valve, ABS Light, Traction Light, Brake Warning, Pump Front, Pump Rear, Buzzer.**

This screen provides a check of several HABS components, as well as a way to check either inlet or outlet activity of the valves, pump or retarder relay.

Highlight the component you wish to test, then select the **Send** button to actuate the component. Component activation status appears in the **Status Box** field. Select **Close** to exit this screen.

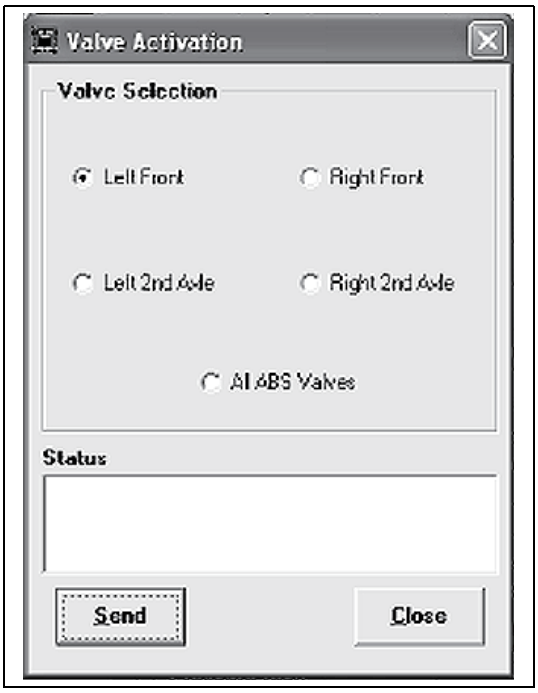


SAPH16F060800023

(10) Valves
Select **Valves** to display the **Valve Activation** test screen.
The **Valve Activation** test screen lets you activate the HABS valves to check for correct activation and to verify correct brake line installation.

Click on the valve you wish to test, then click the **Send** button to actuate the component. Component activation status appears in the **Status** box field. Select **Close** to exit this screen.

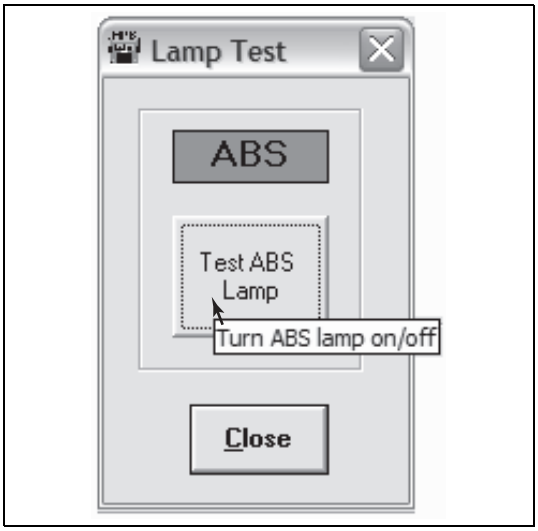


SAPH16F060800024

(11) Lamps
Select **Lamps** to display the **Light Test** screen.
As each light is tested, check the actual light to verify correct operation. Select **Close** to exit this screen.




SAPH16F060800025

(12) Relay
Select **Relay** to display the **Activate Relay** test screen.
This screen allows you to turn the retarder relay on or off. This is helpful in verifying correct operation, installation and wiring of the unit under test. Select **Close** to exit this screen.

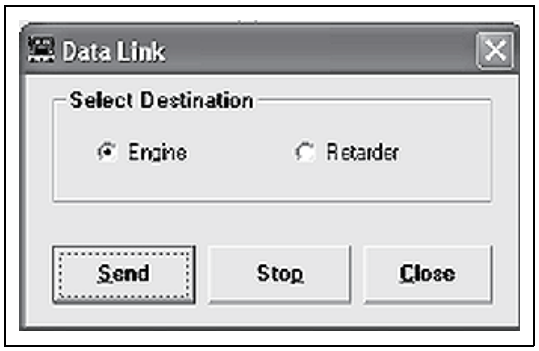


SAPH16F060800026

(13) Engine Data Link
Select **Engine Data Link** to display the **Data Link** test screen.
This screen allows you to send a "limit engine torque" command to the engine or a "disable retarder" command to the retarder.

Select the data link destination (engine or retarder), then select **Send** to test. Use the **Stop** button to end testing. Select **Close** to exit this screen.

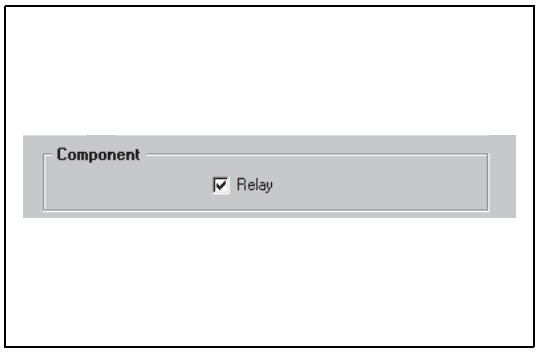


SAPH16F060800027

(14) Reset Memorized
This is an automatic default and cannot be de-selected. It indicates the ECU has memorized the installed retarder relay. Once the ECU has seen a retarder, it expects to see it every time the vehicle is powered up.

Because there are times when an ECU is moved to another vehicle - or during diagnostic testing - you may want the ECU to disregard this learned component. Use the **Reset Memorized** command for this purpose.

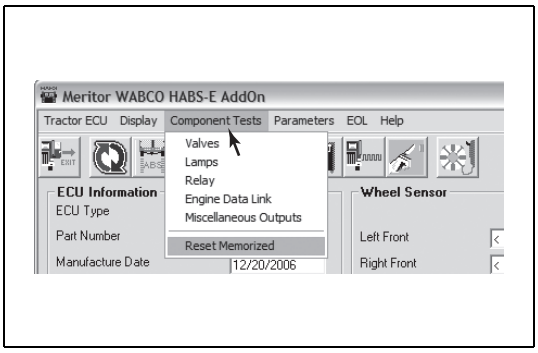


SAPH16F060800028

Select **Component Tests** from the Hydraulic ABS **Main Menu**. Then, select **Reset Memorized** from the pull-down menu to reset the **Learned Component** screen.

(15) Standard Testing

a. Test Equipment: Volt-Ohm Meter (VOM)
Use of a VOM with automatic polarity sensing is recommended. This eliminates the concern of the polarity of the meter leads during voltage measurements.

(16) System Requirements and Component Tests

a. Tire Size Range
For correct hydraulic ABS operation, front and rear tire sizes must be within 16% of each other.

Contact the Meritor WABCO Customer Support Center at 800-535-5560 if you plan a tire size difference greater than 8%.

Calculate the tire size with the following equation:
% Difference = (RPM Steer/RPM Drive)-1 x 100
RPM = tire revolutions per mile

**⚠ CAUTION**
**When troubleshooting or testing the ABS system, do not damage the connector terminals. Damaged connector terminals may cause system malfunction.**

b. Voltage Check
Voltage must be between 9.5 and 14 volts for the 12-volt hydraulic ABS to function correctly.

Check voltage as follows.

- Turn ignition ON.
- Check for the correct voltage.
- Pins 16 to 18
- Pins 17 to 19
- Pins 1 to 6

(17) Standard Component Testing

a. ABS Warning Light
If the ABS warning light does not come on after the ignition is turned on, or it comes on but does not go out after three seconds, check all ABS fuses or circuit breakers and replace if necessary.
Check the wiring to the warning light and repair or replace the wiring as required. When checking the warning light, follow these steps:

b. Check voltage potential at the light socket.

c. Check continuity of the wires to the socket.

d. Replace the bulb.

(18) Sensor Adjustment
On steering axles, the sensor is typically accessible on the in-board side of the steering knuckle.
On drive axles, the sensor is typically accessible on the in-board side of the rear axle spindle.
To adjust the sensor, push the sensor in until it contacts the tooth wheel.

- Do not pry or push sensors with sharp objects.
- Sensors will self-adjust during wheel rotation.

**NOTICE**
**No gap is allowable at installation. During normal operation, a gap not to exceed 0.04 inch is allowable.**

(19) Sensor Output Voltage Test
Sensor output voltage must be at least 0.2 volt AC at 30rpm. Test the sensor output voltage as follows:

a. Turn ignition OFF.
b. Disconnect the ECU to measure voltage at the pins on the ECU connector. Refer to Table D.

**⚠ WARNING**
**Park the vehicle on a level surface. Block the wheels to prevent the vehicle from moving. Support the vehicle with safety stands. Do not work under a vehicle supported only by jacks. Jacks can slip and fall over. Serious personal injury and damage to components can result.**

c. Place blocks under the front and rear tires to stop the vehicle from moving.
d. Raise the vehicle off the ground. Place safety stands under the axle.
e. Rotate the wheel by hand at 30 rpm (1/2 revolution per second).
f. Measure the voltage at the pins indicated in Table D. Voltage tolerance is ≥0.2 volts alternating current (VAC).

**Table D: Sensor Check Pins**

| Sensor | HABS E Version ECU |
|---|---|
| | 31-Pin Harness |
| Left Front | 24 and 29 |
| Right Front | 25 and 30 |
| Left Rear | 23 and 28 |
| Right Rear | 22 and 27 |

(20) Sensor Resistance
The sensor circuit resistance must be between 900 and 2000 Ω. Measure resistance at the sensor connector, or at the pins on the ECU connector, as follows.

a. Turn ignition OFF.
b. To measure resistance at the pins on ECU connector, disconnect the ECU connector from the ECU.
To measure resistance at the sensor connector, disconnect the sensor from the sensor extension cable.
c. Measure output at the pins indicated in Table D.
If measurement is not between 900 and 2000 Ω, replace the sensor.

## COMPONENT REMOVAL AND INSTALLATION

**1. SENSORS: WHEEL SPEED SENSOR REPLACEMENT — FRONT AXLE**

Meritor WABCO specifications call for a sensor lubricant with the following characteristics:

Lube must be mineral oil-based and contain molydisulfide. It should have excellent anti-corrosion and adhesion characteristics and be capable of continuous function in a temperature range of -40°C to 300°F (-40° to 150°C).

(1) Removal

**⚠ WARNING**

**To prevent serious eye injury, always wear safe eye protection when you perform vehicle maintenance or service.**

**Block the wheels to prevent the vehicle from moving. Support the vehicle with safety stands. Do not work under a vehicle supported only by jacks. Jacks can slip and fall over. Serious personal injury can result.**

**To avoid damage to the electrical system or ABS components, when welding on an ABS-equipped vehicle disconnect the power connector from the ECU.**

a. Apply the parking brakes. Chock the rear tires to prevent vehicle movement.

   If necessary, raise the front tires off the ground. Put safety stands under the axle.

b. Disconnect the fasteners that hold the sensor cable to other components.
c. Disconnect the sensor cable from the chassis harness.
d. Remove the sensor from the sensor holder. Twist and pull the sensor to remove it from the sensor bracket. **Do not pull on the cable.**

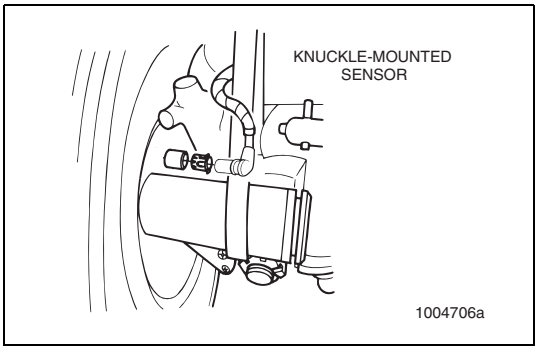


SAPH16F060800029

(2) Installation
a. Connect the sensor cable to the chassis harness.
b. Install the fasteners used to hold the sensor cable in place.
c. Apply a Meritor WABCO-recommended lubricant to the sensor spring clip and sensor.
d. Install the sensor spring clip. Make sure the spring clip tabs are on the inboard side of the vehicle.
e. With the tabs on the inboard side, push the sensor spring clip into the bushing in the steering knuckle until the clip stops.
f. Push the sensor completely into the sensor spring clip until it contacts the tooth wheel.
g. Fasten the sensor cable with tie wraps every 12 inches. Properly bundle and store excess cable in the sub frame.
h. Remove the blocks and safety stands.
i. Perform a voltage output check to ensure proper installation. Refer to "Voltage Check" in page 9-16.

**2. WHEEL SPEED SENSOR REPLACEMENT REAR AXLE**

(1) Removal
a. Apply the parking brake. Chock the front tires to prevent vehicle movement.
b. Raise the rear tires off of the ground. Put safety stands under the axle.
c. If the rear tire must be removed to gain access to the sensor, release the parking brake to release the brake shoe.

Remove the wheel and tire assembly from the axle.

Remove the sensor from the mounting block in the axle housing. Use a twisting motion if necessary. **Do not pull on the cable.**
d. Disconnect the sensor cable from the chassis harness.
e. Remove the sensor cable from any cable clamps or clips.
f. Remove the sensor spring clip from the sensor bracket.

(2) Installation
a. Connect the new sensor cable to the chassis harness.
b. Press the sensor spring clip into the sensor bracket, located on the rear axle, until it stops. Make sure the tabs are on the inboard side.
c. Apply a Meritor WABCO-recommended lubricant to the sensor.
d. Push the sensor completely into the spring clip until it contacts the tooth wheel.
e. Reattach the sensor cable to the cable clamps or clips.
f. Replace the tire, remove the safety stands, lower the vehicle and remove the chocks from the front tires.
g. Perform a voltage output check to ensure proper installation.

**3. MODULATOR ASSEMBLY**

(1) Modulator Assembly Removal

**⚠ CAUTION**

**The modulator assembly contains hydraulic brake fluid, a caustic substance. Remove the valve carefully so that fluid does not leak and cause skin irritation or damage to components.**

a. Apply the parking brakes. Chock the front and rear tires to prevent vehicle movement.
b. Place a container under the modulator assembly to catch leaking brake fluid.
c. Disconnect the electrical harness connectors from the modulator assembly.
d. Mark the six brake lines for ease of installation. Disconnect the lines from the modulator assembly.
e. Remove the three mounting capscrews, washers and nuts that attach the modulator assembly and bracket assembly to vehicle.

**NOTICE**

**Whenever any hydraulic system fitting is loosened or disconnected, the entire system must be bled to remove any air that may have entered.**

f. Remove the modulator assembly and bracket.

(2) Modulator Assembly Installation

a. Position the modulator assembly and bracket in place on the vehicle.
b. Tighten the three mounting nuts.
Tightening torque
27-33 N·m (275-336 kgf.cm, 239-295 lbf-in)
c. Connect and tighten brake line connections as follows:
   - Two small (MI0XI) adapters:
     12N·m (122kgf.cm,108 lbf-in)
   - Four large (MI2XI) adapters:
     15N·m (153kgf.cm,132 lbf-in)
d. Bleed the brake system, per the following instructions.
e. Connect the electrical harnesses to the modulator assembly.

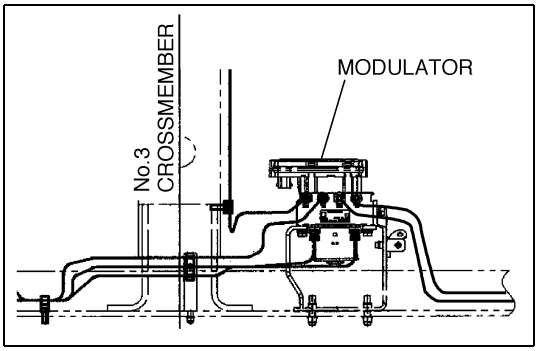


SAPH16F060800030

**4. BRAKE BLEEDING PROCEDURES**

(1) General

The following brake bleeding methods explain how to bleed the hydraulic ABS modulator assembly during installation, or in the event of air in the brake system. There are instructions for both pressure and manual bleeding procedures.

These instructions include the procedure for bleeding both the master cylinder and the brake system. In some cases, for example, if you are replacing only the modulator assembly, it may not be necessary to bleed the master cylinder. If you have any questions, please contact the Meritor Service Center at 800-535-5560.

**NOTICE**

**The modulator assembly must be handled with appropriate care and should not be exposed to excessive impact or compressed air at the hydraulic ports prior to assembly.**

**⚠ WARNING**

**Failure to bleed the system whenever any hydraulic system fitting is loosened or disconnected will allow air to remain in the system. This will prevent the hydraulic pressure in the brake system from rising enough to apply the brakes properly. This will cause the stopping distance to increase and can result in serious personal injury.**

**Properly discard hydraulic brake fluid that is removed from the brake system. Hydraulic brake fluid that is removed can be contaminated and can cause damage, loss of braking and serious personal injury.**

**Use only the type of hydraulic brake fluid specified by the equipment manufacturer. Do not use or mix different types of hydraulic brake fluid. The wrong hydraulic brake fluid will damage the rubber parts of the brake caliper and can cause damage, loss of braking and serious personal injury.**

**NOTICE**

**Use DOT 3 or DOT 4 hydraulic brake fluid. Refer to the vehicle specifications to determine which fluid to use.**

**⚠ CAUTION**

**Hydraulic brake fluid is a caustic substance. Contact with hydraulic brake fluid can cause skin irritation. Do not let hydraulic brake fluid touch any painted surfaces, as it will remove the paint. Hydraulic brake fluid may also damage certain non-metal surfaces. Do not let fluid get on brake pads, shoes, rotors or disks.**

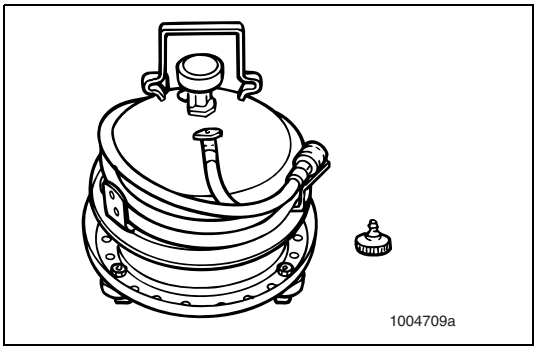


SAPH16F060800031

(2) Pressure Fill and Bleed
**Pressure fill and bleeding** is the preferred method for bleeding the service brake system. It requires the use of a special pressure bleeder kit, consisting of a tank, pressure pump and valve, gauge, tubing and adapter. These kits are available from a number of manufacturers and include instructions for use.

(3) Pressure Fill and Bleed Procedure:

a. Apply the parking brake and chock the tires. Turn the ignition OFF and disconnect the battery terminals.

**NOTICE**
**The ignition must remain off for the entire bleeding procedure; energizing the unit during bleeding must be impossible.**

b. Fill the pressure bleeder with new DOT 3 or DOT 4 hydraulic brake fluid. Refer to the vehicle specifications to determine which fluid to use.
c. Follow the manufacturer's instructions to connect the pressure bleeder to the brake master cylinder reservoir.
d. Set filling pressure to 20 to 30 psi (1.5 to 2.0 bar).
e. Turn on bleeding equipment until fluid level in reservoir reaches approximately 0.875-inches (20 mm).
f. Release pressure for 3 to 5 seconds. Apply pressure for 5 to 10 seconds.
g. Repeat Steps 5 and 6 approximately 10 times. After releasing the pressure, air bubbles should rise up into the reservoir.

**⚠ WARNING**
**Do not let the brake master cylinder fluid get below the minimum level during the bleeding operation. Keep the master cylinder reservoir filled with new DOT-approved brake fluid, as specified by the original equipment manufacturer. Failure to keep the brake reservoir level above minimum could result in more air entering system, making it impossible to effectively bleed the system.**

h. Bleed the brake system:
- Set filling pressure to 20 to 30 psi (1.5 to 2.0 bar).
- Put a wrench on the brake actuator bleeder fitting. Start with the farthest from the modulator, (typically the right rear), then attach a length of clear plastic tubing to the bleeder fitting. Make sure the tube fits snugly.

i. Submerge the tubing in a container of clean hydraulic brake fluid.

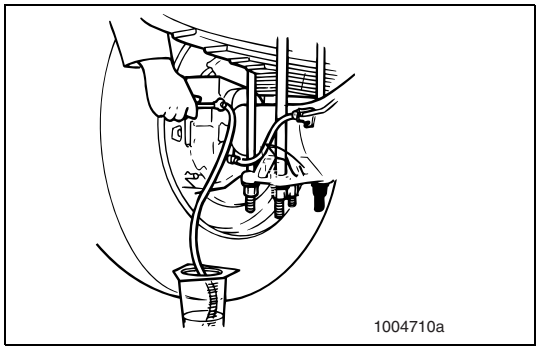

SAPH16F060800032

**NOTICE**
**Both the tubing and container must be able to withstand the effects of hydraulic brake fluid.**

Loosen the bleeder fitting until the fluid begins to flow (about 3/4 turn). Let the hydraulic fluid flow out of the fitting until it is free of air bubbles.

j. Tighten firmly to secure the fitting.
k. Repeat Steps 5 through 8 to bleed the remaining three brake actuators. Bleed in sequence of the longest to shortest circuit from the modulator assembly.
l. Turn off bleeding equipment and remove pressure. Remove bleeding device and check fluid level in reservoir. Fill if required. Replace reservoir cap and dispose of used brake fluid.
m. Remove wheel chocks.

(4) Manual Bleeding Procedure:

a. Apply the parking brake and chock the tires. Turn the ignition OFF and disconnect the battery terminals.

**NOTICE**

**The ignition must remain off for the entire bleeding procedure; energizing the unit during bleeding must be impossible.**

b. Fill the reservoir with DOT 3 or DOT 4 hydraulic brake fluid. Refer to the vehicle specifications to determine which fluid to use.
c. Depress the brake pedal five times using the stroke between 1/3 travel and maximum travel in 5 seconds.
d. Release the pedal for 5 to 10 seconds. Air bubbles will rise into the reservoir while depressing and releasing pedal.
e. Repeat Steps 3 and 4 another three times, or until sufficient pedal resistance is felt.

**⚠ WARNING**

**Do not let the brake master cylinder fluid get below the minimum level during the bleeding operation. Keep the master cylinder reservoir filled with new DOT-approved brake fluid as specified by the original equipment manufacturer. Failure to keep the brake reservoir level above minimum could result in more air entering system, making it impossible to effectively bleed the system.**

f. Bleed the brake system. Put a wrench on the brake actuator bleeder fitting. Start with the farthest from the modulator, (typically the right rear), then attach a length of clear plastic tubing to the bleeder fitting. Make sure the tube fits snugly.
g. Submerge the tubing in a container of clean brake fluid.

**NOTICE**

**Both the tubing and container must be able to withstand the effects of brake fluid.**

h. Depress the brake pedal 10 to 15 times, using the maximum available stroke.
i. Loosen the bleeder fitting until the fluid begins to flow, (about 3/4 turn), while depressing the brake pedal through its maximum available stroke.
j. Tighten the fitting firmly prior to releasing the brake pedal.
k. Repeat Steps 6 through 8 several times until the discharged fluid is free of air bubbles.
l. Repeat Steps 3 through 9 to bleed the remaining three brake actuators. Bleed in sequence of the longest to the shortest circuit from the modulator.
m. Check the travel of the brake pedal. If a firm resistance is felt the manual bleeding procedure is complete.
n. Check the fluid level in reservoir and fill if required. Replace reservoir cap and dispose of used brake fluid.
o. Remove wheel chocks.

# BRAKE CONTROL SYSTEM (ABS:FULL AIR)

9-002

**ABS ..... 9-2**
TROUBLESHOTTING ..... 9-2

# ABS

## TROUBLESHOTTING

EN01H16F07080F03001001

### BEFORE YOU BEGIN

This manual provides instructions for Meritor WABCO's anti-lock braking system for trucks, tractors and buses. Before you begin procedures:

1. Read and understand all instructions and procedures before you begin to service components.
2. Read and observe all Caution and Warning safety alerts that precede instructions or procedures you will perform. These alerts help to avoid damage to components, serious personal injury, or both.
3. Follow your company's maintenance and service, installation, and diagnostics guidelines.
4. Use special tools when required to help avoid serious personal injury and damage to components.

#### 1. SAFETY ALERTS, TORQUE SYMBOL AND NOTES

| | |
|---|---|
| ⚠ **WARNING** | A Warning alerts you to an instruction or procedure that you must follow exactly to avoid serious personal injury and damage to components. |
| ⚠ **CAUTION** | A Caution alerts you to an instruction or procedure that you must follow exactly to avoid damage to components and possible serious injury. |
| **NOTICE** | A Note provides information or suggestions that help you correctly service a component. |

#### 2. ACCESS INFORMATION ON ARVINMERITOR'S WEB SITE

Additional maintenance and service information for ArvinMeritor's commercial vehicle systems component lineup is also available at www.arvinmeritor.com.

To access information, click on Products & Services/Tech Library Icon/HVS Publications. The screen will display an index of publications by type.

#### 3. ADDITIONAL INFORMATION

Call ArvinMeritor's Customer Service Center at 800-535-5560 to order the following item.

- Drivetrain Plus™ by ArvinMeritor Technical Electronic Library on CD. Features product and service information on most Meritor, ZF Meritor and Meritor WABCO products. $20. Order TP-9853.

## ASBESTOS FIBERS WARNING

***The following procedures for servicing brakes are recommended to reduce exposure to asbestos fiber dust, a cancer and lung disease hazard. Material Safety Data Sheets are available from ArvinMeritor.***

### Hazard Summary

Because some brake linings contain asbestos, workers who service brakes must understand the potential hazards of asbestos and precautions for reducing risks. Exposure to airborne asbestos dust can cause serious and possibly fatal diseases, including asbestosis (a chronic lung disease) and cancer, principally lung cancer and mesothelioma (a cancer of the lining of the chest or abdominal cavities). Some studies show that the risk of lung cancer among persons who smoke and who are exposed to asbestos is much greater than the risk for non-smokers. Symptoms of these diseases may not become apparent for 15, 20 or more years after the first exposure to asbestos.

Accordingly, workers must use caution to avoid creating and breathing dust when servicing brakes. Specific recommended work practices for reducing exposure to asbestos dust follow. Consult your employer for more details.

### Recommended Work Practices

1. Separate Work Areas. Whenever feasible, service brakes in a separate area away from other operations to reduce risks to unprotected persons. OSHA has set a maximum allowable level of exposure for asbestos of 0.1 f/cc as an 8-hour time-weighted average and 1.0 f/cc averaged over a 30-minute period. Scientists disagree, however, to what extent adherence to the maximum allowable exposure levels will eliminate the risk of disease that can result from inhaling asbestos dust. OSHA requires that the following sign be posted at the entrance to areas where exposures exceed either of the maximum allowable levels:

**DANGER: ASBESTOS**
**CANCER AND LUNG DISEASE HAZARD**
**AUTHORIZED PERSONNEL ONLY**
**RESPIRATORS AND PROTECTIVE CLOTHING**
**ARE REQUIRED IN THIS AREA.**

2. Respiratory Protection. Wear a respirator equipped with a high-efficiency (HEPA) filter approved by NIOSH or MSHA for use with asbestos at all times when servicing brakes, beginning with the removal of the wheels.

3. Procedures for Servicing Brakes.

a. Enclose the brake assembly within a negative pressure enclosure. The enclosure should be equipped with a HEPA vacuum and worker arm sleeves. With the enclosure in place, use the HEPA vacuum to loosen and vacuum residue from the brake parts.

b. As an alternative procedure, use a catch basin with water and a biodegradable, non-phosphate, water-based detergent to wash the brake drum or rotor and other brake parts. The solution should be applied with low pressure to prevent dust from becoming airborne. Allow the solution to flow between the brake drum and the brake support or the brake rotor and caliper. The wheel hub and brake assembly components should be thoroughly wetted to suppress dust before the brake shoes or brake pads are removed. Wipe the brake parts clean with a cloth.

c. If an enclosed vacuum system or brake washing equipment is not available, employers may adopt their own written procedures for servicing brakes, provided that the exposure levels associated with the employer's procedures do not exceed the levels associated with the enclosed vacuum system or brake washing equipment. Consult OSHA regulations for more details.

d. Wear a respirator equipped with a HEPA filter approved by NIOSH or MSHA for use with asbestos when grinding or machining brake linings. In addition, do such work in an area with a local exhaust ventilation system equipped with a HEPA filter.

e. **NEVER** use compressed air by itself, dry brushing, or a vacuum not equipped with a HEPA filter when cleaning brake parts or assemblies. **NEVER** use carcinogenic solvents, flammable solvents, or solvents that can damage brake components as wetting agents.

4. Cleaning Work Areas. Clean work areas with a vacuum equipped with a HEPA filter or by wet wiping. **NEVER** use compressed air or dry sweeping to clean work areas. When you empty vacuum cleaners and handle used rags, wear a respirator equipped with a HEPA filter approved by NIOSH or MSHA for use with asbestos. When you replace a HEPA filter, wet the filter with a fine mist of water and dispose of the used filter with care.

5. Worker Clean-Up**.** After servicing brakes, wash your hands before you eat, drink or smoke. Shower after work. Do not wear work clothes home. Use a vacuum equipped with a HEPA filter to vacuum work clothes after they are worn. Launder them separately. Do not shake or use compressed air to remove dust from work clothes.

6. Waste Disposal**.** Dispose of discarded linings, used rags, cloths and HEPA filters with care, such as in sealed plastic bags. Consult applicable EPA, state and local regulations on waste disposal.

### Regulatory Guidance

References to OSHA, NIOSH, MSHA, and EPA, which are regulatory agencies in the United States, are made to provide further guidance to employers and workers employed within the United States. Employers and workers employed outside of the United States should consult the regulations that apply to them for further guidance.

## NON-ASBESTOS FIBERS WARNING

***The following procedures for servicing brakes are recommended to reduce exposure to non-asbestos fiber dust, a cancer and lung disease hazard. Material Safety Data Sheets are available from ArvinMeritor.***

### Hazard Summary

Most recently manufactured brake linings do not contain asbestos fibers. These brake linings may contain one or more of a variety of ingredients, including glass fibers, mineral wool, aramid fibers, ceramic fibers and silica that can present health risks if inhaled. Scientists disagree on the extent of the risks from exposure to these substances. Nonetheless, exposure to silica dust can cause silicosis, a non-cancerous lung disease. Silicosis gradually reduces lung capacity and efficiency and can result in serious breathing difficulty. Some scientists believe other types of non-asbestos fibers, when inhaled, can cause similar diseases of the lung. In addition, silica dust and ceramic fiber dust are known to the State of California to cause lung cancer. U.S. and international agencies have also determined that dust from mineral wool, ceramic fibers and silica are potential causes of cancer.

Accordingly, workers must use caution to avoid creating and breathing dust when servicing brakes. Specific recommended work practices for reducing exposure to non-asbestos dust follow. Consult your employer for more details.

### Recommended Work Practices

1. Separate Work Areas. Whenever feasible, service brakes in a separate area away from other operations to reduce risks to unprotected persons.

2. Respiratory Protection. OSHA has set a maximum allowable level of exposure for silica of 0.1 mg/m$^3$ as an 8-hour time-weighted average. Some manufacturers of non-asbestos brake linings recommend that exposures to other ingredients found in non-asbestos brake linings be kept below 1.0 f/cc as an 8-hour time-weighted average. Scientists disagree, however, to what extent adherence to these maximum allowable exposure levels will eliminate the risk of disease that can result from inhaling non-asbestos dust.

Therefore, wear respiratory protection at all times during brake servicing, beginning with the removal of the wheels. Wear a respirator equipped with a high-efficiency (HEPA) filter approved by NIOSH or MSHA, if the exposure levels may exceed OSHA or manufacturer's recommended maximum levels. Even when exposures are expected to be within the maximum allowable levels, wearing such a respirator at all times during brake servicing will help minimize exposure.

3. Procedures for Servicing Brakes.

a. Enclose the brake assembly within a negative pressure enclosure. The enclosure should be equipped with a HEPA vacuum and worker arm sleeves. With the enclosure in place, use the HEPA vacuum to loosen and vacuum residue from the brake parts.

b. As an alternative procedure, use a catch basin with water and a biodegradable, non-phosphate, water-based detergent to wash the brake drum or rotor and other brake parts. The solution should be applied with low pressure to prevent dust from becoming airborne. Allow the solution to flow between the brake drum and the brake support or the brake rotor and caliper. The wheel hub and brake assembly components should be thoroughly wetted to suppress dust before the brake shoes or brake pads are removed. Wipe the brake parts clean with a cloth.

c. If an enclosed vacuum system or brake washing equipment is not available, carefully clean the brake parts in the open air. Wet the parts with a solution applied with a pump-spray bottle that creates a fine mist. Use a solution containing water, and, if available, a biodegradable, non-phosphate, water-based detergent. The wheel hub and brake assembly components should be thoroughly wetted to suppress dust before the brake shoes or brake pads are removed. Wipe the brake parts clean with a cloth.

d. Wear a respirator equipped with a HEPA filter approved by NIOSH or MSHA when grinding or machining brake linings. In addition, do such work in an area with a local exhaust ventilation system equipped with a HEPA filter.

e. **NEVER** use compressed air by itself, dry brushing, or a vacuum not equipped with a HEPA filter when cleaning brake parts or assemblies. **NEVER** use carcinogenic solvents, flammable solvents, or solvents that can damage brake components as wetting agents.

4. Cleaning Work Areas. Clean work areas with a vacuum equipped with a HEPA filter or by wet wiping. **NEVER** use compressed air or dry sweeping to clean work areas. When you empty vacuum cleaners and handle used rags, wear a respirator equipped with a HEPA filter approved by NIOSH or MSHA, to minimize exposure. When you replace a HEPA filter, wet the filter with a fine mist of water and dispose of the used filter with care.

5. Worker Clean-Up. After servicing brakes, wash your hands before you eat, drink or smoke. Shower after work. Do not wear work clothes home. Use a vacuum equipped with a HEPA filter to vacuum work clothes after they are worn. Launder them separately. Do not shake or use compressed air to remove dust from work clothes.

6. Waste Disposal**.** Dispose of discarded linings, used rags, cloths and HEPA filters with care, such as in sealed plastic bags. Consult applicable EPA, state and local regulations on waste disposal.

### Regulatory Guidance

References to OSHA, NIOSH, MSHA, and EPA, which are regulatory agencies in the United States, are made to provide further guidance to employers and workers employed within the United States. Employers and workers employed outside of the United States should consult the regulations that apply to them for further guidance.

## ABS CONFIGURATION

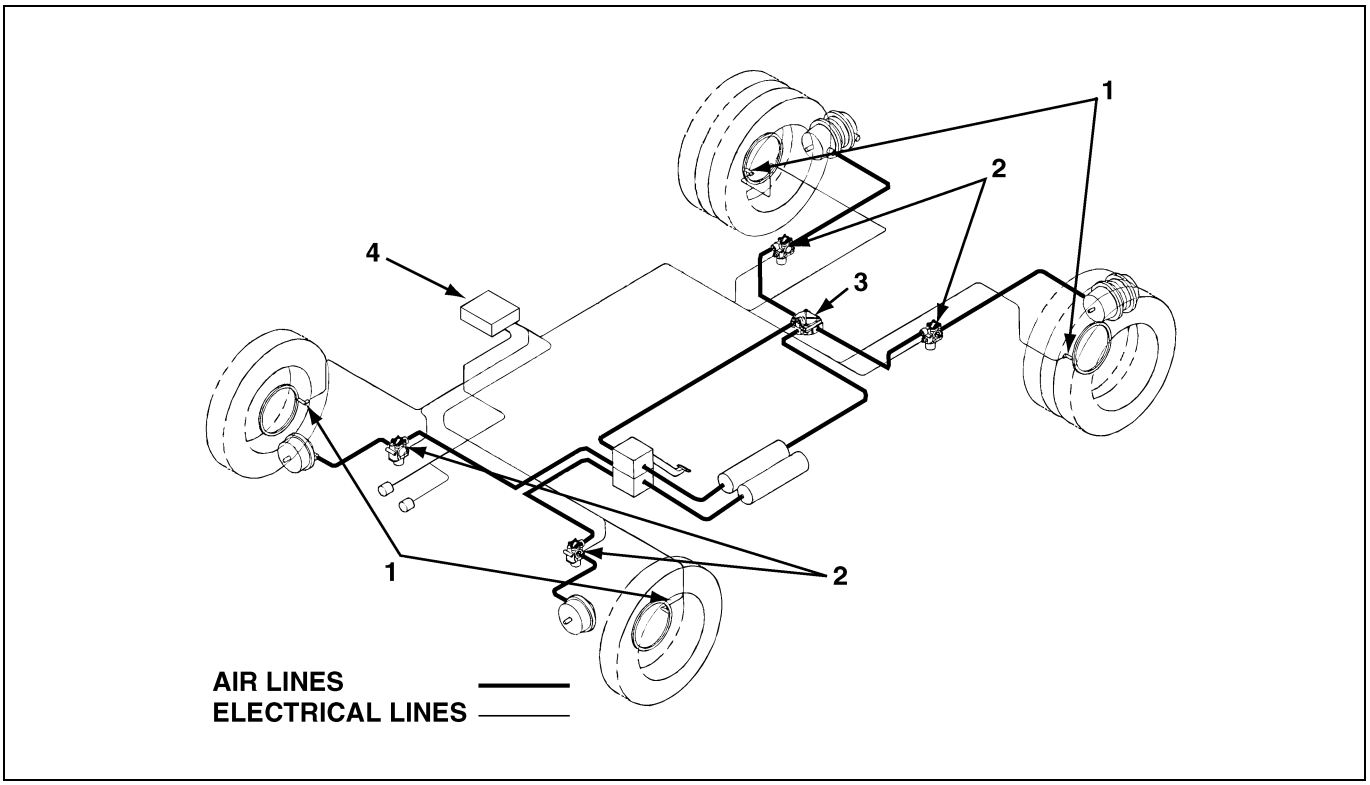


SAPH16F070800002

| | | | |
|---|---|---|---|
| 1 | Wheel sensors | 3 | Relay valve |
| 2 | ABS control valve | 4 | ABS ECU |

## SYSTEM COMPONENTS

The ECU is the brain of the ABS system. It receives information from the sensors and sends signals to the ABS valves. The ECU is cab-mounted.

**NOTICE**

**Do not open the ECU. Opening the ECU to gain access to the internal components will void the warranty.**

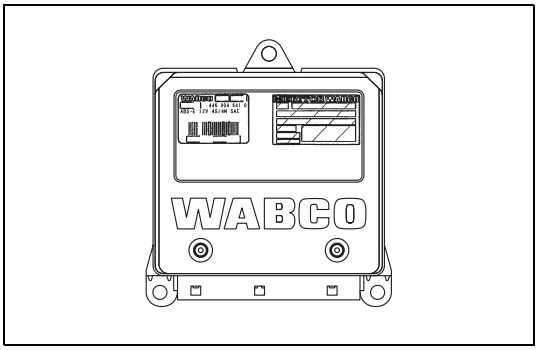


SAPH16F070800003

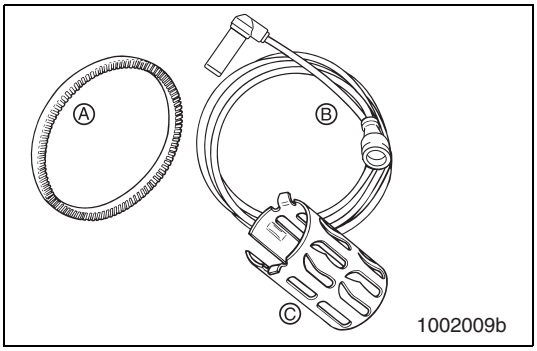


SAPH16F070800004

A tooth wheel (A) is mounted at, or cast in, the hub of each sensed wheel, with a sensor (B) installed so that its end is against the tooth wheel. A sensor clip (C) holds the sensor in place at the tooth wheel.

**NOTICE**

**The sensor and clip must be greased with Meritor WABCO-recommended lubricant. Refer to "Sensor Lube Specification" page 9-23 for lube specification.**

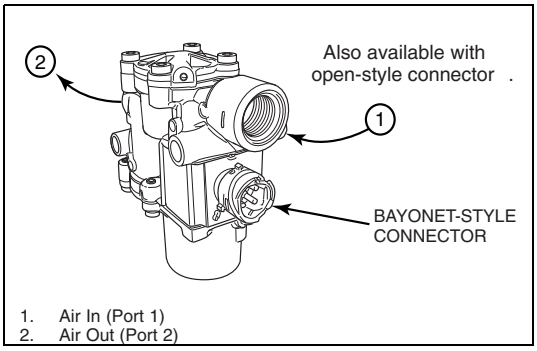


SAPH16F070800005

An **ABS modulator valve** controls air pressure to each affected brake during an ABS event. The modulator valve is usually located on a frame rail or cross member near the brake chamber. The modulator valve is available in bayonet-style or open-style connector.

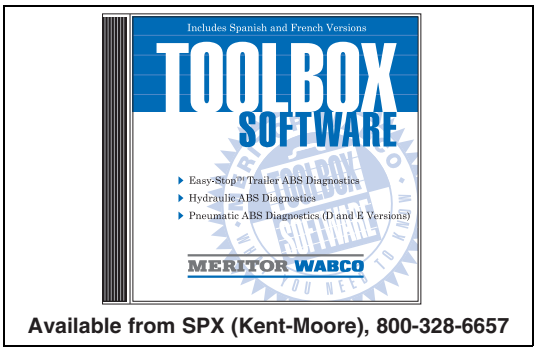


SAPH16F070800006

**TOOLBOX Software** is a PC-based diagnostics program that can display wheel speed data, test individual components, verify installation wiring and more. Runs in Windows® 95, 98 and NT. An RS232 to J1708 convertor box is required. Versions 3.2 and higher support E version ABS.

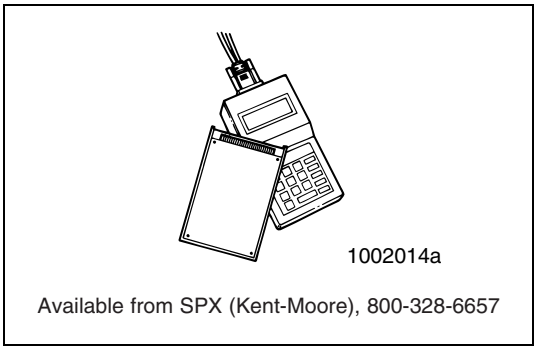


SAPH16F070800007

The **MPSI Pro-Link® 9000** with a multiple protocol cartridge (MPC) and Meritor WABCO applications card, version 2.0 or higher, provides diagnostic and testing capabilities for the E version ABS.

**NOTICE**

**The Power Line Carrier Communication (PLC) functions of E version ABS cannot be tested with the Pro-Link.**

## System Diagnostics

Use any of the following methods to diagnose E version ABS:

- TOOLBOX Software, version 3.2 or higher, a PC-based ABS diagnostic and testing program that runs in Windows 95, 98 or NT
- Blink Codes — Tractor ABS only
- MPSI Pro-Link with MPC and Meritor WABCO applications card, version 2.0 or higher
- OEM Diagnostic Displays (Refer to the Vehicle Operator's Manual)

Information about TOOLBOX Software, MPSI Pro-Link and Blink Codes follows. If you have any questions about system diagnostics, please contact ArvinMeritor's Customer Service Center at 800-535-5560.

## 1. TOOLBOX SOFTWARE

**NOTICE**

**For complete instructions for using TOOLBOX Software, refer to the User's Manual.**

If you have TOOLBOX Software installed on your computer, use it to identify system faults. Then, follow the on-screen repair information to make the necessary repairs or replacements.

To display E version ABS faults:

(1) Connect the computer to the vehicle:

- Attach the cable from your computer to the J1708 to RS232 converter box.
- Attach the diagnostic cable (Deutsch) to the vehicle.

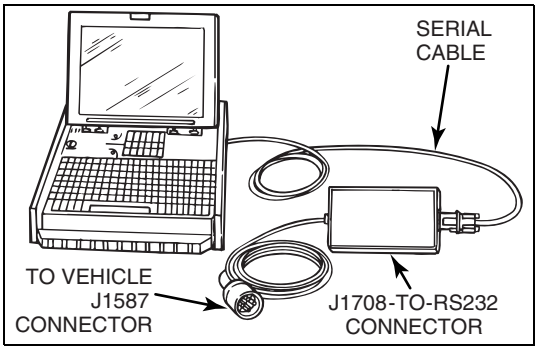


SAPH16F070800008

(2) Select TOOLBOX Software from Desktop or from the Windows Start Menu to display the TOOLBOX Main Menu.

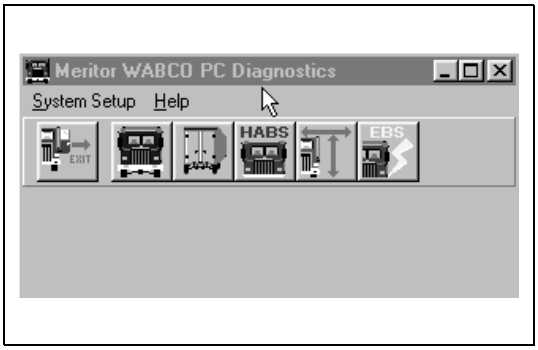


SAPH16F070800009

(3) From the **Main Menu**, select **Tractor ABS** Diagnostics, or use the pull down menu to make your selection. The **ABS Main** Screen will appear.

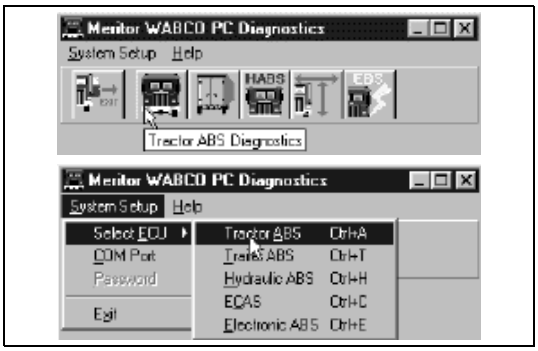


SAPH16F070800010

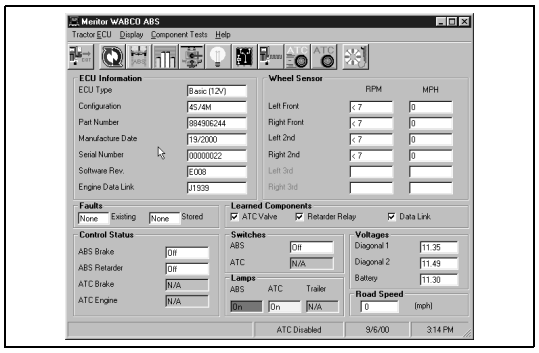


SAPH16F070800011

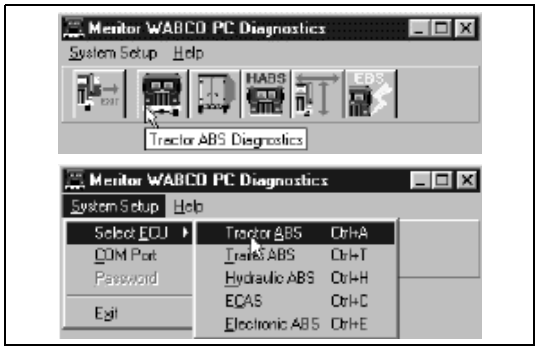


SAPH16F070800012

(4) From the **ABS Main Screen**, select the **Faults** icon, or use the pull down menu to display the faults from the ECU.

**NOTICE**

**If there are Faults in the system (YES in existing or stores fields) double-click on the YES to display Fault Information.**

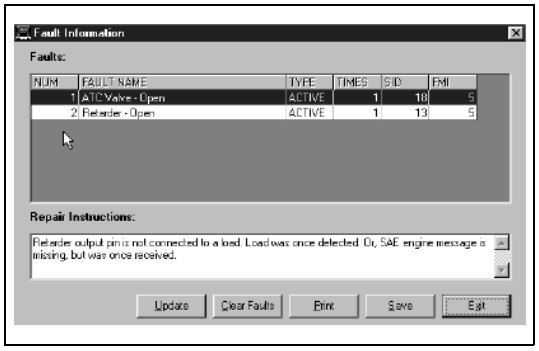


SAPH16F070800013

(5) The **Fault Information Screen** contains a description of the fault. Repair instructions for each fault appear at the bottom of the screen.

**NOTICE**

**Faults that occur after the screen is displayed will not appear until a screen update is requested. Use the Update button at the bottom of the screen to refresh the fault information table.**

(6) After making the necessary repairs, use the **Clear Faults** button at the bottom of the screen to clear the fault. Use the **Update** button to refresh the fault information table and display the new list of faults.

**2. BLINK CODE DIAGNOSTICS (TRACTOR ABS ONLY)**

(1) Definitions

Before using blink code diagnostics, you should be familiar with a few basic terms. If you used previous versions of Meritor WABCO's blink code diagnostics, review these definitions to identify major changes.

**ABS Indicator Light:** This light serves two purposes: it alerts drivers to an ABS tractor fault and it is used during diagnostics to display the blink code.

**Blink Code:** A series of blinks or flashes that describe a particular ABS system fault or condition.

**Blink Code Cycle:** Two sets of flashes with each set separated by a one-and-one-half second pause. Blink codes are defined in Blink Code Identification in this section.

**Blink Code Switch:** A momentary switch that activates blink code diagnostic capabilities. Switch types and locations vary, depending on the make and model of the vehicle.

**Clear:** The process of erasing faults from the ECU.

**Diagnostics:** The process of using blink codes to determine ABS system faults.

**Fault:** An ABS malfunction detected and stored in memory by the Meritor WABCO ECU. System faults may be Active or Stored.

**Active Fault:** A condition that currently exists in the ABS system; for example, a sensor circuit malfunction on the left front steering axle. An active fault must be repaired before it can be cleared from memory — and before you can display additional blink code faults.

**Stored Fault:** There are two types of stored faults:

a. A repaired active fault that **has not been cleared** from the ECU.
b. A fault that occurred but **no longer exists.** For example, a loose wire that makes intermittent contact. Because stored faults are not currently active they do not have to be repaired before they can be cleared from memory.

Meritor WABCO recommends you keep a record of these faults for future reference.

**System Configuration Code:** One digit code displayed during the clear mode. Blink codes for common ABS system configurations are shown in figure.

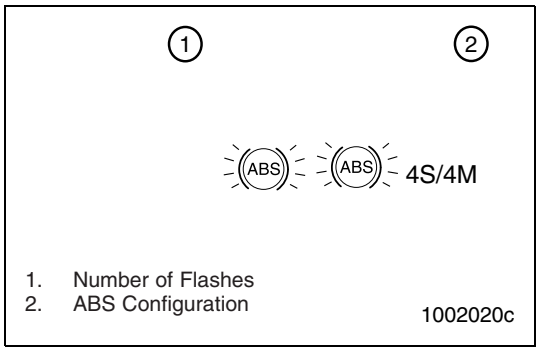


SAPH16F070800014

**3. DIAGNOSTIC MODE**

To enter the diagnostic mode, press and hold the blink code switch for one second, then release.

**4. CLEAR MODE**

To erase faults from the ECU, you must be in the clear mode. To enter the clear mode, press and hold the blink code switch for at least three seconds, then release.

If the system displays eight quick flashes followed by a system configuration code, the clear was successful. Stored ABS faults have been cleared from memory.

If you do not receive eight flashes, there are still active faults that must be repaired before they can be cleared.

**5. BLINK CODE DIAGNOSTICS**

**Troubleshooting with Blink Code Diagnostics**

| Mode | Procedure | System Response | Action |
|---|---|---|---|
| DIAGNOSTICS | **Step I.**<br>Turn Ignition ON | Possible responses:<br>A. ABS indicator light comes on momentarily then goes out, indicating System O.K.<br>B. ABS indicator light does not light, indicating possible wiring fault or burned-out bulb.<br>C. ABS indicator light stays on, indicating:<br>• Fault, or faults, in the system.<br>• Sensor fault during last operation.<br>• Faults cleared from ECU, but vehicle not driven.<br>• ECU disconnected. | <br>No recognizable active faults in the ABS. No action required.<br>Inspect wiring. Inspect bulb. Make necessary repairs.<br><br>Continue with blink code diagnostics. **(Go to Step II.)**<br>Continue with blink code diagnostics. **(Go to Step II.)**<br>Drive vehicle—light will go out when vehicle reaches 4 mph (6 km/h).<br>Connect ECU. |
| | **Step II.**<br>Press and hold Blink Code Switch for one second, then release. | ABS indicator light begins flashing two-digit blink code(s). | Determine if fault is active or stored:<br>**Active Fault:** Light will repeatedly display one code.<br>Stored Fault: Light will display code for each stored fault then stop blinking. Faults will be displayed **one time only**. |
| | **Step III.**<br>Count the flashes to determine the blink code. | First Digit: 1 - 8 flashes, Pause (1-1/2 seconds).<br>Second Digit: 1 - 6 flashes, Pause (4 seconds). | Find definition for blink code on blink code chart. |
| | **Step IV**.<br>Turn Ignition OFF .<br>Repair and Record faults. | Active Fault.<br>Stored Faults. | Make the necessary repairs. Repeat Steps I, II, and III until System O.K. code (1-1) received.<br>Record for future reference.<br>**NOTE:** Last fault stored is first fault displayed. |
| CLEAR | **Step V**.<br>Turn Ignition ON.<br>Clear Faults from memory: **Press and hold** blink code switch for at least three seconds, then release. | ABS Indicator Light flashes eight times.<br>Eight ßashes not received. | All stored faults successfully cleared. Turn ignition OFF.<br>Active faults still exist, repeat Steps I through V. |

SAPH16F070800015

## 6. BLINK CODES ILLUSTRATED

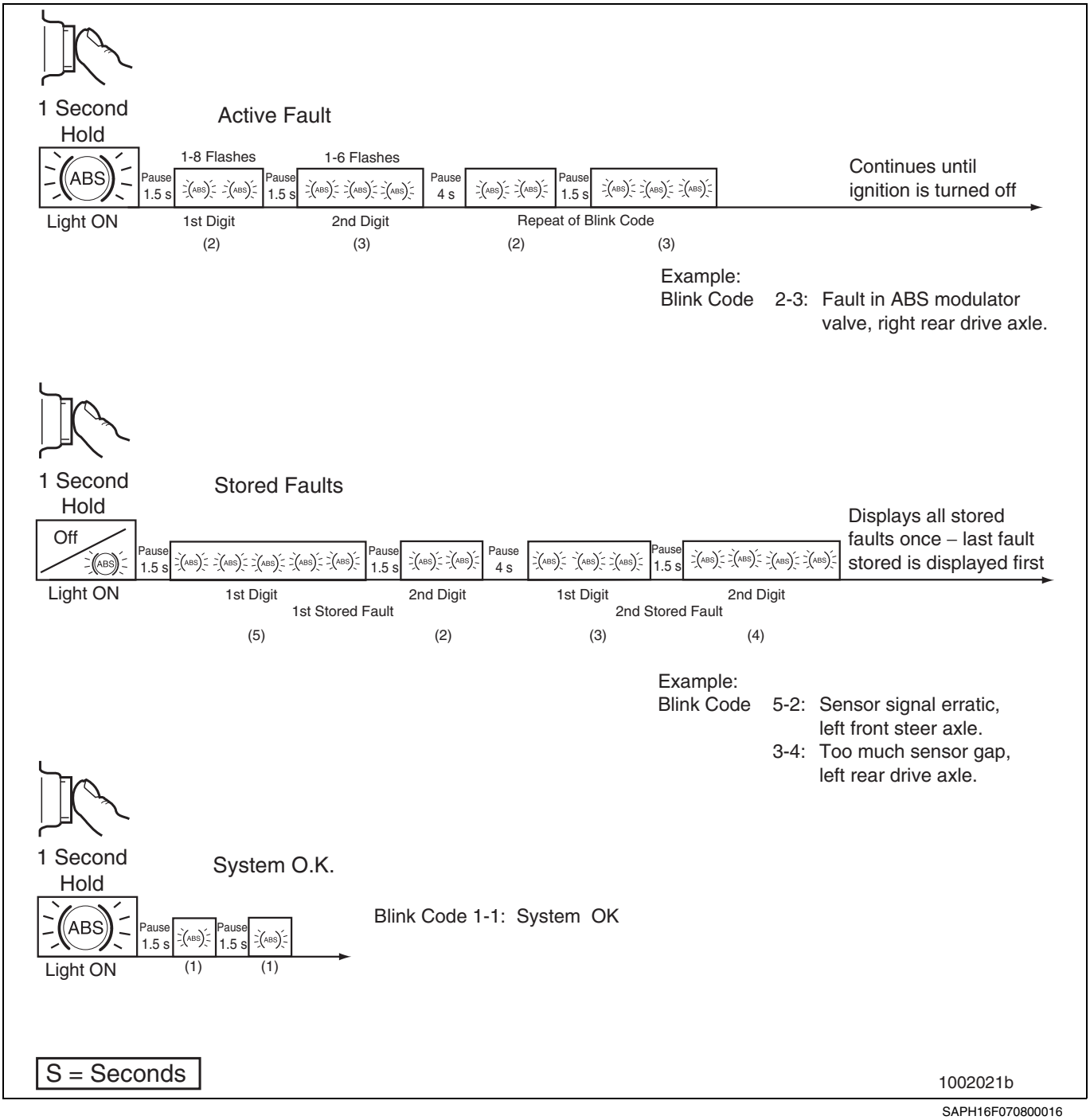


SAPH16F070800016

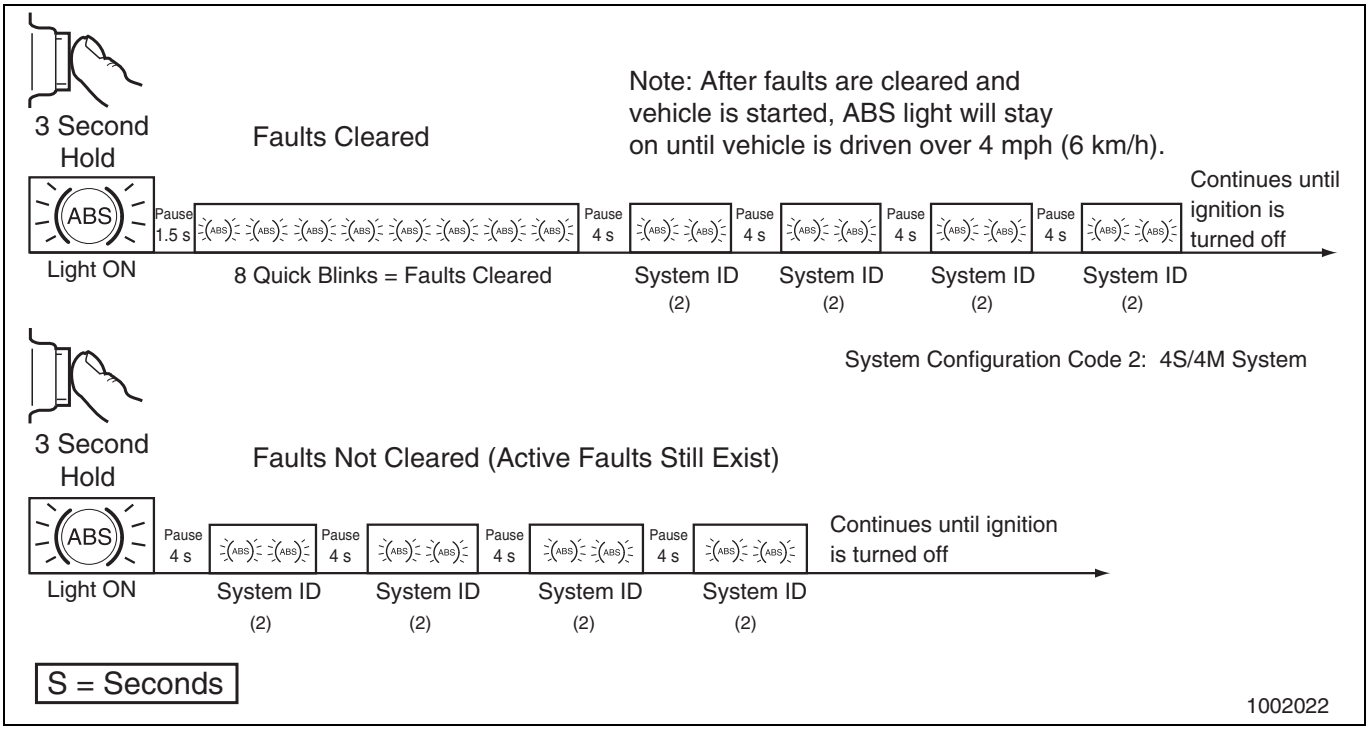


SAPH16F070800017

## WORKING WITH BLINK CODES

**1. BLINK CODE CONDITIONS**

When using blink code diagnostics, the following conditions could occur:

| Blink Code Conditions | | |
|---|---|---|
| Condition | Reason | Action |
| ABS indicator light does not come on at ignition. | Loose or burned-out bulb. | Check bulb.<br>Check connections.<br>Make necessary repairs. |
| | Voltage not within acceptable range (9.5-14.0 volts). | Check connections.<br>Measure voltage.<br>Make necessary repairs. |
| Can't use blink code diagnostics; ABS indicator light will not go off when blink code is activated. | Switch not held for proper length of time:<br>1 Second — Diagnostics Mode<br>3 Seconds — Clear All Mode | Repeat procedure, hold switch for proper length of time. |
| | Improper or faulty wiring. | Inspect and repair wiring. |
| Eight Flashes not received after blink code switch pressed for **at least** three seconds, then released. | Active Faults still exist. | Identify active faults, then make necessary repairs. Turn ignition OFF, then repeat Blink Code Diagnostics. |

**2. BLINK CODE IDENTIFICATION**

Use the following information to identify the blink code:

| **Blink Code Identification** | |
|---|---|
| **First Digit (Type of Fault)** | Second Digit — Specific Location of Fault |
| 1 No faults | 1 No faults |
| 2 ABS modulator valve<br>3 Too much sensor gap<br>4 Sensor short or open<br>5 Sensor signal erratic/tire size<br>6 Tooth wheel | 1 Right front steer axle (curb side)<br>2 Left front steer axle (driver's side)<br>3 Right rear drive axle (curb side)<br>4 Left rear drive axle (driver's side) |
| 7 System function** | 1 J1939 datalink<br>2 ATC valve<br>3 Retarder relay (third brake)<br>4 ABS indicator light<br>5 ATC configuration<br>6 ATC prop./dif lock/stop valve |
| 8 ECU | 1 Low power supply<br>2 High power supply<br>3 Internal fault<br>4 System configuration error<br>5 Ground |

*** Tandem, lift, tag or pusher axle depending upon the type of suspension.**

**** If this code continues after all repairs have been made — or if you receive a code for a component that is not installed on the vehicle — it may be necessary to reconfigure the ECU. Refer to the Reconfiguration Procedure described in page 9-28. TOOLBOX Software may also be used to reconfigure the ECU (refer to page 9-28). Contact ArvinMeritor's Customer Service Center at 800-535-5560 for reconfiguration information.**

**3. BLINK CODE TROUBLESHOOTING AND REPAIR**

| Blink Code | Action Required | Reference |
|---|---|---|
| 2-1 2-4<br>2-2 2-5<br>2-3 2-6 | Check ABS modulator valve, valve cable, and connectors.<br>Verify 4.0-9.0 ohms resistance (ABS modulator valve). | Refer to "Valve Tests," page 9-23. |
| 3-1 3-4<br>3-2 3-5<br>3-3 3-6 | Adjust wheel sensor to touch tooth wheel.<br>Check sensor gap.<br>Check for loose wheel bearings or excessive hub runout.<br>Verify minimum 0.2 volts AC output @ 30 rpm. | Refer to "Sensor Adjustment," page 9-22, "Sensor Output Voltage Test," page 9-22, and "Component Tests and Functions," page 9-17. |
| 4-1 4-4<br>4-2 4-5<br>4-3 4-6 | Check sensor, sensor cable, and connectors.<br>Verify 900-2000 ohms resistance. | Repair or replace as needed. |
| 5-1 5-5<br>5-2 5-6<br>5-3 5-7 | Check for tire size mismatch or tooth wheel difference.<br>Check sensor, sensor cable, and connector for intermittent contact. | Refer to "Tire Size Range," page 9-21. |

| | | |
|---|---|---|
| 6-1 6-4<br>6-2 6-5<br>6-3 6-6 | Check for damaged tooth wheel. | Repair or replace as needed. |
| 7-1* | Check for proper J1939 data link connection.<br>Verify wheel spin on each axle. | Refer to wiring diagram in page 9-27. |
| 7-2* | Check ATC Valve, valve cables, and connectors.<br>Verify 7.0-14.0 ohms resistance. | Refer to "Valve Tests," page 9-23. |
| 7-3* | Check retarder (third brake) connections. | Refer to wiring diagram in page 9-27. |
| 7-4* | Check ABS indicator light connections.<br>Verify blink code switch was activated longer than 16 seconds. | |
| 7-5* | Verify proper ATC set-up. | |
| 7-6* | Verify accuracy of blink code and clear from ECU memory. | Refer to "Blink Code Diagnostics (Tractor ABS only)," page 9-9. |
| 8-1 | Check for low voltage.<br>Check vehicle voltage, fuse, and supply to ECU (9.5-14.0 volts). | Refer to wiring diagram in page 9-27 and "Voltage Check," page 9-21. |
| 8-2 | Check for high voltage.<br>Check vehicle voltage (9.5-14.0 volts).<br>Verify accuracy of blink code and clear from ECU memory. | Refer to "Voltage Check," page 9-21, and "Blink Code Diagnostics (Tractor ABS only)," page 9-9. |
| 8-3 | Verify accuracy of blink code and clear from ECU memory. | Refer to "Blink Code Diagnostics (Tractor ABS only)" and "Clear Mode," page 9-9. |
| 8-4 | Verify all ECU connectors are in place.<br>Verify accuracy of blink code and clear from ECU memory.<br>If code does not clear, it may be necessary to replace the ECU. | Contact ArvinMeritor's Customer Service Center at 800-535-5560. |
| 8-5 | Check all ABS, ECU and ATC valve grounds. | Refer to wiring diagram in page 9-27. |

*** If this code continues after all repairs have been made — or if you receive a code for a component that is not installed on the vehicle — it may be necessary to reconfigure the ECU. Refer to the Reconfiguration Procedure described in page 9-28. TOOLBOX Software may also be used to reconfigure the ECU (refer to page 9-28). Contact ArvinMeritor's Customer Service Center at 800-535-5560 for reconfiguration information.**

## PRO-LINK® DIAGNOSTICS

**NOTICE**

**You must use Multiple Protocol Cartridge (MPC) and Meritor WABCO application card, version 2.0 or higher, with E version ECUs. The PLC functions of E version ABS cannot be tested with the Pro-Link.**

The Pro-Link® 9000 may be used in place of blink code diagnostic procedures.

The following Pro-Link information applies to E version ECUs. Refer to Maintenance Manual 28 if you are using the Pro-Link with C version ECUs or Maintenance Manual 30 if you are using the Pro-Link with D version ABS.

**1. DIAGNOSTIC PROCEDURE**

(1) Slide the MPC into the Pro-Link keypad until the connection is tight. Then, insert the Meritor WABCO applications card into the cartridge.

(2) Chock the wheels, apply the parking brake, and make sure ignition power is off.

(3) Locate the 6-pin diagnostic receptacle in the vehicle cab. Insert the 6-pin connector from the Pro-Link into the receptacle.

(4) Turn the ignition to the ON/RUN position. The Pro-Link screen should power up. If the Pro-Link does not power up, or if the screen indicates NO DATA RECEIVED:

- Check connections.
- Make sure the cartridge is properly connected to the Pro-Link keypad.
- Verify 9.5-14.0 volts DC power and ground at the connector and ABS ECU.
- Check the fuse panel for a blown fuse.
- Check for proper wiring in the diagnostic connector.

(5) Refer to the Pro-Link manual for complete diagnostic instructions.

**The Pro-Link® 9000 is available from Kent-Moore, 800-328-6657.**

**2. PRO-LINK SCREENS**

This information provides basic screen explanations for the Pro-Link® 9000 with an MPC and Meritor WABCO application card. For complete operating instructions and test information, refer to the Pro-Link manual.

(1) **Fault Information Screens:**

Existing Faults: Use these screens to identify existing faults. The Pro-Link screen displays a written description of the fault, including the location on the vehicle where each exists. As long as there is an active (existing) fault in the system, the Pro-Link will not let you clear faults.

**Stored Faults:** Use these screens to identify faults stored in the ECU memory. Stored faults may be existing faults that have been repaired, or faults that existed for a short time, then corrected themselves. After displaying the stored faults, the Pro-Link lets you erase them from memory. All stored faults are cleared at one time.

## J1939 DATALINK VERIFICATION — PRO-LINK 9000

The Pro-Link diagnostic tool may be used to verify J1939 datalink connection. If you do not have a Pro-Link, you can use the blink code switch to verify this connection.

1. Turn ignition ON. Press blink code switch — hold for 3 seconds.

   A. ATC indicator light will come on and stay on for the entire test.

   *If vehicle is not equipped with ATC, the ATC indicator light will not come on.*

   B. ABS indicator light will come on and blink 8 times.

   *If the light does not blink 8 times, there are faults that must be cleared before you continue with this test.*

   C. The eight quick flashes will be followed by the system configuration code. A 4S/4M (2 blinks) system is identified here.

   *The system configuration code will continue during the entire test.*

2. Activate the J1939 engine torque reduction code, as follows:

   A. Step on the accelerator. Bring the engine to 1000 rpm.

   *Leave your foot on the accelerator during the entire test.*

   B. While engine is at 1000 rpm, press the blink code switch twice, as follows:

   Press for one second

   Release for one second

   Press for one second

   Release for one second

   C. The engine will go to idle for approximately 10 seconds and then return to 1000 rpm.

3. Turn ignition OFF.

   **Test complete, engine torque reduction command verified.**

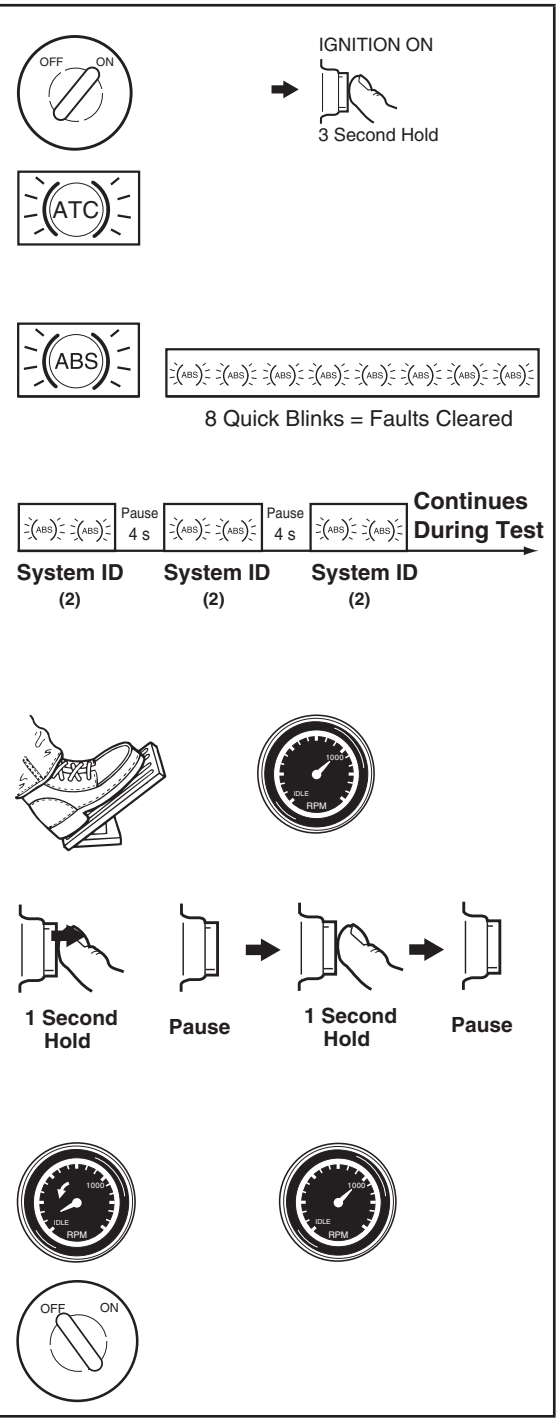


SAPH16F070800018

**1. COMPONENT TEST SCREENS**

These screens help you test ABS components. Select this function from the Tractor ABS/ATC menu.

ABS VALVES
ATC
ABS INDICATOR LIGHT
ABS TRAILER INDICATOR LIGHT
ATC INDICATOR LIGHT
ABS/ATC SWITCHES
SENSORS
ENGINE DATALINK
RETARDER RELAY
RETARDER DATALINK
VEHICLE VOLTAGES

**Select the appropriate function. Each screen has instructions to guide you through the test. Refer to the Pro-Link Manual for complete instructions.**

**2. PRO-LINK 9000 DISPLAY**

With some ECUs, the Pro-Link will display system information — components or options supported by the ECU. Access these screens through System Setup (main ABS menu).

The following screens illustrate:

- A 4S/4M ABS/ATC system
- Where the ECU has not recognized a retarder relay
- Where the ECU has recognized a J1939 datalink
- The ECU is capable of supporting ABS and ATC switches.

**NOTICE**
**Yes indicates the ECU is capable of supporting these options. These may or may not be installed on the vehicle.**

| **TRACTOR ABS/ATC SYSTEM INFORMATION** | |
|---|---|
| **SENSORS** | **4** |
| **MODULATORS** | **4** |

| | |
|---|---|
| ATC VALVE | YES |
| RETARDER RELAY | NO |
| J1939 | YES |
| DIFF LOCK | NO |
| ABS SWITCH | YES |
| ATC SWITCH | YES |

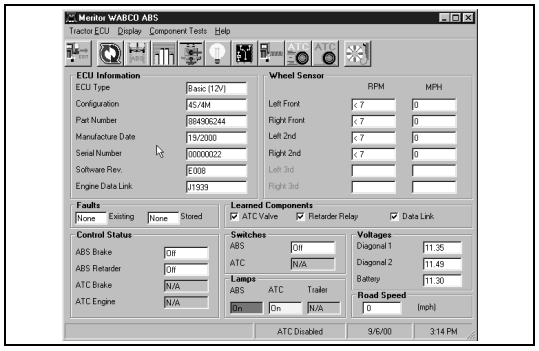


SAPH16F070800019

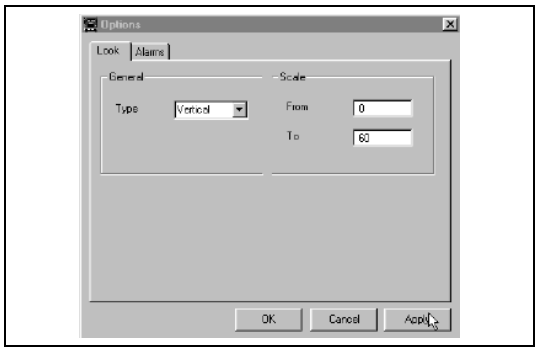


SAPH16F070800020

### 3. SYSTEM INFORMATION

(1) TOOLBOX Software Display

**NOTICE**

**Refer to page 15 of this manual for instructions for running TOOLBOX Software, or refer to the Software Owner's Manual, TP-99102, for complete instructions.**

The quickest method of verifying system information is the TOOLBOX Software ABS Main Screen.

This screen provides information about the current state of Meritor WABCO ABS. ECU information is read once from the ECU and does not change. All other information (e.g., wheel sensors, control status, voltages, faults and road speed) is read and updated continuously.

The status of ABS switches and lights, as well as other data, may also be observed from this screen.

### 4. COMPONENT TESTS AND FUNCTIONS

(1) TOOLBOX Software

**NOTICE**

**Refer to page 15 of this manual for instructions for running TOOLBOX Software, or refer to the Software Owner's Manual, TP-99102, for complete instructions.**

Use TOOLBOX Software to display wheel speeds, cycle ABS valves, activate ABS and ATC lights, including the trailer ABS light, and turn the retarder relay on or off. In addition, the J1939 engine datalink connection may be quickly verified by using TOOLBOX Software.

(2) Wheel Speed

Select the wheel speed icon or use the pull down menu from the ABS Main Screen to display wheel speed data in both numeric and graphical form. This data may be shown in RPM or MPH format and in vertical or horizontal graphs. Select the appearance and style from the options menu.

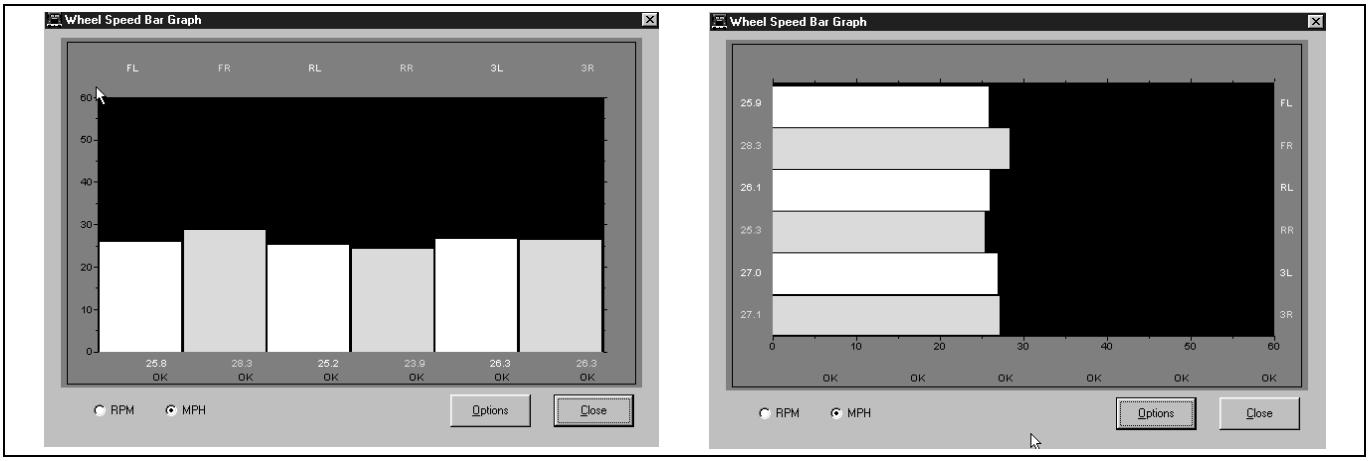


SAPH16F070800021

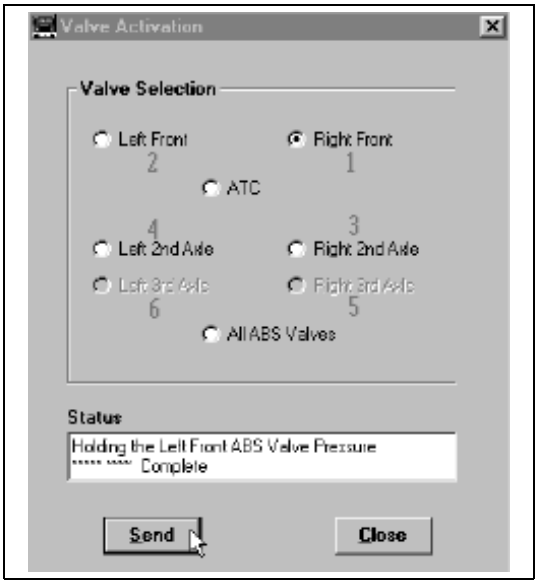


SAPH16F070800022

(3) Valve Activation

Select the valve icon or use the pull down menu to select and cycle individual ABS valves. Then listen to ensure the correct valve is cycling. This is helpful when verifying proper operation, installation and wiring.

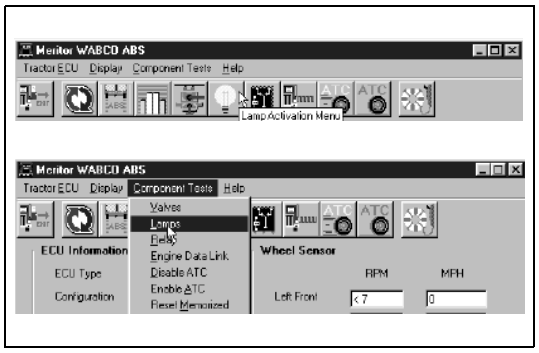


SAPH16F070800023

(4) Light Activation
Select the light icon or use the pull down menu to turn the tractor and trailer ABS and/or the ATC (wheel spin) lights on or off. This is helpful when verifying proper operation, installation and wiring of the lights to the ECU.

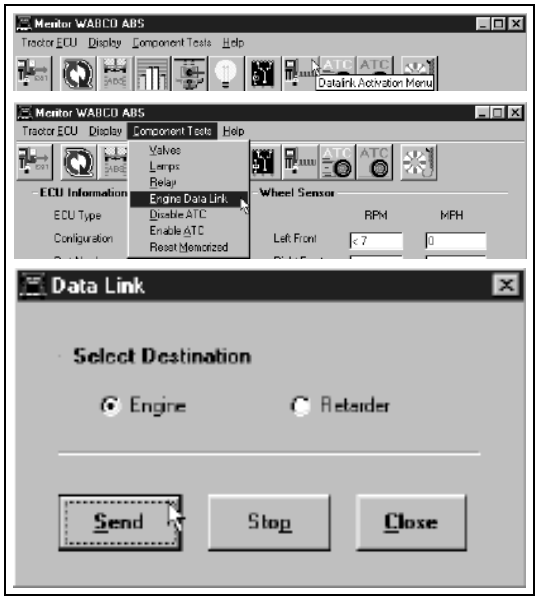


SAPH16F070800024

(5) Data Link Activation
Select the **Engine Data Link** icon from the Main ABS Screen or use the pull down menu to send a "limit engine torque" command to the engine or a "disable retarder" command to the retarder.

(6) Component Tests and Functions (Pro-Link)
These screens help you test ABS components. Select this function from the Tractor ABS/ATC menu.

**TRACTOR COMP TESTS**
**— SELECTIONS —**
**↑ VEHICLE VOLTAGES ↓**

Select the appropriate function. Each screen has instructions to guide you through the test. Refer to the Pro-Link Manual for complete instructions.

The following definitions explain the function of each test.

| Component Test | Function |
|---|---|
| Vehicle Voltages | Monitors the voltage signals powering the ECU. |
| ABS Valves | Cycles the valves, one at a time. With brake pedal applied, you should hear four short air exhausts, then one long air pressure hold. A menu selection lets you choose from four or six valves. This test is used to verify valve locations and proper wiring.<br>**NOTICE**<br>**The treadle must be applied to pressurize the brake chambers.** |
| ATC | Checks the ATC valve. You will hear a click as the valve cycles.<br>**NOTICE**<br>**TOOLBOX Software or the Pro-Link may be used to shut off ATC for dynamometer testing.** |
| ABS Tractor Light | Monitors the commanded (on/off) states of the ABS tractor light. Follow the screen prompts (1 On, 2 Off) to change the status of the light on the instrument panel. |
| ABS Trailer Light | Monitors the commanded (on/off) states of the ABS trailer light. Follow the screen prompts (1 On, 2 Off) to change the status of the light on the instrument panel. |
| ATC Tractor Light | Monitors the commanded (on/off) states of the ATC tractor light. Follow the screen prompts (1 On, 2 Off) to change the status of the light on the instrument panel. |
| ABS/ATC Switches | Checks the status of ABS and ATC/Deep Snow and Mud switches on the instrument panel. |
| Sensors | Monitors the input to the ECU from the wheel. Vehicle must be stationary and wheels must be rotated during this test. |
| Engine Datalink | Checks wiring connections and response between the engine and the ECU. |
| Retarder Relay | Activates the relay to verify function (a click will be heard). This test also checks wiring connections. |
| Retarder Datalink | Checks wiring connections and retarder response between the retarder and the ECU. |

a. Tire Size Range
For proper ABS/ATC operation with the standard ECU, front and rear tire sizes must be within ± 14% of each other. When this tire size range is exceeded without electronically modifying the ECU, the system performance can be affected and the indicator light can illuminate.

Call Meritor WABCO at 800-535-5560 if you plan a tire size difference greater than 14%.

Calculate the tire size with the following equation:

$$\% \text{ Difference} = \left\{ \frac{\text{RPM Steer}}{\text{RPM Drive}} - 1 \right\} \times 100$$

***RPM — tire revolutions per mile***

## 5. TESTING COMPONENTS

**⚠ CAUTION**
**When troubleshooting and testing the ABS system, do not damage the connector terminals.**

(1) Voltage Check
Measure voltage at the pins indicated in **Table C.**

- Voltage must be between 9.5 and 14.0 volts.
- The ignition must be turned ON for this test.

**Table C: Voltage check pins**

| ECU | Connector | Pins |
|---|---|---|
| Universal | 14-Pin | 4 and 9<br>9 and 4 |
| Basic | 14-Pin | 7 and 4<br>8 and 9 |
| Frame-mounted | X1-Grey | 1 and 12<br>2 and 11 |

**NOTICE**
**Pin locations are illustrated in figure (Frame) and figure (Basic and Universal).**

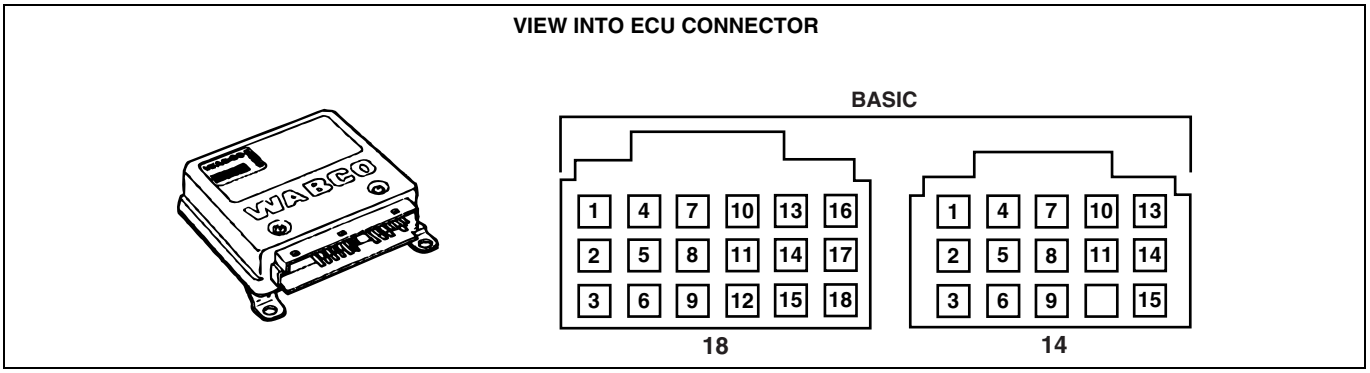


SAPH16F070800026

(2) Location of Sensors
On steering axles, the sensor is accessible on the in-board side of the steering knuckle.

On drive axles, the drum assembly may have to be pulled to gain access to the sensor.

(3) Sensor Adjustment
- Push the sensor in until it contacts the tooth wheel.
- Do not pry or push sensors with sharp objects.
- Sensors will self-adjust during wheel rotation.

(4) Sensor Output Voltage Test
Voltage must be at least 0.2 volts AC at 30 rpm.
a. Turn ignition OFF.
b. Disconnect the appropriate connector from the ECU (refer to wiring diagram).
c. Rotate wheel by hand at 30 rpm (1/2 revolution per second).
d. Measure voltage at the pins indicated in **Table D**.
- If the minimum output voltage is less than 0.2, push the corresponding sensor toward the tooth wheel, then repeat the measurement.

**Table D: Sensor Check Pins**

| ECU | Sensor | Connector | Pins |
|---|---|---|---|
| Basic | LF<br>RF<br>LR<br>RR | 18-Pin<br>18-Pin<br>18-Pin<br>18-Pin | 12 and 15<br>10 and 13<br>11 and 14<br>17 and 18 |

(5) Sensor Resistance
The sensor circuit resistance must be between 900 and 2000 ohms. Resistance can be measured at the sensor connector, or at the pins on the ECU connector. To measure resistance:
a. Turn ignition OFF.
b. To measure resistance at the sensor connector, disconnect the ECU connector from the ECU. To measure resistance at the sensor connector, disconnect the sensor from the sensor extension cable.
c. Measure output at the pins indicated in **Table D**.

## VALVE TESTS

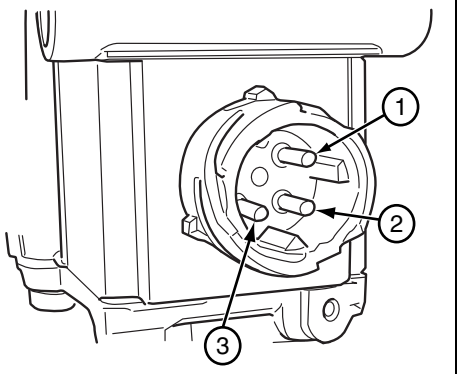


1. Exhaust Solenoid (blue wire)
2. Inlet Solenoid (brown wire)
3. Ground Terminal

SAPH16F070800027

**1. ABS MODULATOR VALVE**

Measure resistance across each valve solenoid coil terminal and ground on the ABS valve to ensure 4.0 to 9.0 ohms.

- If the resistance is greater than 9.0 ohms, clean the electrical contacts in the solenoid. Check the resistance again.
- To check the cable and the ABS valve as one unit, measure resistance across the pins on the ECU connector of the harness. Check the diagram of the system you are testing for pin numbers. (Refer to page 9-27.)

## COMPONENT REMOVAL AND INSTALLATION

**1. VALVES**

- ABS Modulator Valves

**2. SENSOR LUBE SPECIFICATION**

Meritor WABCO specifications call for a sensor lubricant with the following characteristics:

Lube must be mineral oil-based and contain molydisulfide. It should have excellent anti-corrosion and adhesion characteristics, and be capable of continuous function in a temperature range of -40° to 300°F (-40° to 150°C).

**⚠ WARNING**

**To prevent serious eye injury, always wear safe eye protection when you perform vehicle maintenance or service.**

**Release all air from the air systems before you remove any components. Pressurized air can cause serious personal injury.**

**⚠ CAUTION**

**Use the following procedures to avoid damage to the electrical system and ABS/ATC components.**

**When welding on an ABS- or ABS/ATC-equipped vehicle is necessary, disconnect the power connector from the ECU.**

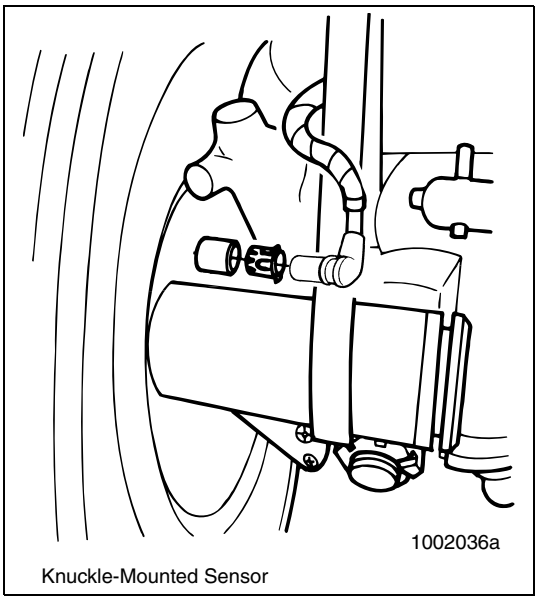


Knuckle-Mounted Sensor

SAPH16F070800028

**3. WHEEL SPEED SENSOR REMOVAL — FRONT AXLE**

To remove the sensor from the front axle:

**⚠ WARNING**

**Park the vehicle on a level surface. Block the wheels to prevent the vehicle from moving. Support the vehicle with safety stands. Do not work under a vehicle supported only by jacks. Jacks can slip and fall over. Serious personal injury can result.**

(1) Put blocks under the rear tires to stop the vehicle from moving. Apply the parking brake.
(2) If necessary, raise the front tires off the ground. Put safety stands under the axle.
(3) Disconnect the fasteners that hold the sensor cable to other components.
(4) Disconnect the sensor cable from the chassis harness.
(5) Remove the sensor from the sensor holder. Use a twisting motion if necessary. **Do not pull on the cable.**

**4. WHEEL SPEED SENSOR INSTALLATION — FRONT AXLE**

To replace the sensor in the front axle:

(1) Connect the sensor cable to the chassis harness.
(2) Install the fasteners used to hold the sensor cable in place.
(3) Apply a Meritor WABCO recommended lubricant to the sensor spring clip and sensor.
(4) Install the sensor spring clip. Make sure the spring clip tabs are on the inboard side of the vehicle.
(5) Push the sensor spring clip into the bushing in the steering knuckle until the clip stops.
(6) Push the sensor completely into the sensor spring clip until it contacts the tooth wheel.

**NOTICE**

**After installation, there should be no gap between the sensor and the tooth wheel. During normal operation, a gap of up to 0.04-inch is allowable.**

(7) Remove the blocks and safety stands.

**5. WHEEL SPEED SENSOR REMOVAL— REAR AXLE**

To remove the sensor in the rear axle:

**⚠ WARNING**

**Park the vehicle on a level surface. Block the wheels to prevent the vehicle from moving. Support the vehicle with safety stands. Do not work under a vehicle supported only by jacks. Jacks can slip and fall over. Serious personal injury can result.**

(1) Put blocks under the front tires to stop the vehicle from moving.
(2) Raise the rear tire off the ground. Put safety stands under the axle.
(3) Release the parking brake and back off the slack adjuster to release the brake shoes.
(4) Remove the wheel and tire assembly from the axle.
(5) Remove the brake drum.
(6) Remove the sensor from the mounting block in the axle housing. Use a twisting motion if necessary. Do not pull on the cable.
(7) Remove the sensor spring clip from the mounting block.

(8) Disconnect the fasteners that hold the sensor cable and the hose clamp to other components.
(9) Disconnect the sensor cable from the chassis harness.

**6. WHEEL SPEED SENSOR INSTALLATION—REAR AXLE**

(1) Apply a Meritor WABCO recommended lubricant to the sensor spring clip and sensor.
(2) Install the sensor spring clip. Make sure the spring clip tabs are on the inboard side of the vehicle.
(3) Push the sensor spring clip into the mounting block until it stops.

**NOTICE**

**After installation, there should be no gap between the sensor and the tooth wheel. During normal operation, a gap of up to 0.04-inch is allowable.**

(4) Push the sensor completely into the sensor spring clip until it contacts the tooth wheel.
(5) Insert the sensor cable through the hole in the spider and axle housing flange. Route the cable to the frame rail. Be sure to route the cable in a way that will prevent pinching or chafing and will allow sufficient movement for suspension travel.
(6) Connect the sensor cable to the chassis harness.
(7) Install the fasteners that hold the sensor cable in place.
(8) Install the brake drum on the wheel hub.
(9) Complete the installation per vehicle manufacturer's manual.

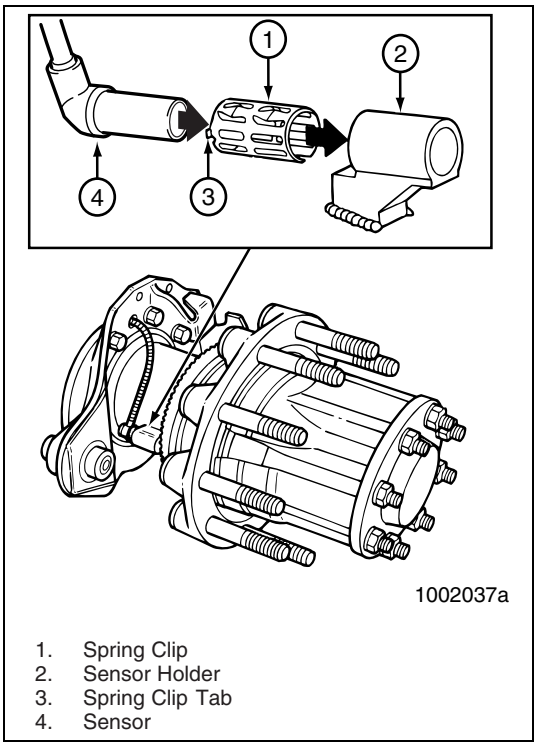


1. Spring Clip
2. Sensor Holder
3. Spring Clip Tab
4. Sensor

SAPH16F070800029

**7. ABS MODULATOR VALVE**

(1) Removal
a. Turn ignition switch to the OFF position, apply parking brake.

**⚠ WARNING**

**Park the vehicle on a level surface. Block the wheels to prevent the vehicle from moving. Support the vehicle with safety stands. Do not work under a vehicle supported only by jacks. Jacks can slip and fall over. Serious personal injury can result.**

b. Put blocks under the front and rear tires to stop the vehicle from moving.
c. If necessary, raise the vehicle off the ground and put safety stands under the axle.
d. Disconnect the wiring connector from the ABS valve.
e. Disconnect the air lines from Ports 1 (air supply) and 2 (air discharge) of the ABS valve.
f. Remove the two mounting capscrews and nuts.
g. Remove the ABS valve.

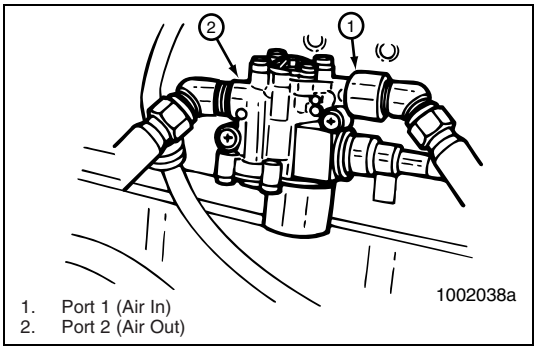


1. Port 1 (Air In)
2. Port 2 (Air Out)

SAPH16F070800030

(2) Installation

**⚠ CAUTION**

**Moisture can affect the performance of all ABS/ATC systems, as well as the standard braking system. Moisture in air lines can cause air lines to freeze in cold weather.**

**To install the ABS modulator valve:**

a. Install the ABS valve with two mounting capscrews and nuts. Tighten the capscrews per the manufacturer's recommendation.

b. Connect the line to the brake chambers to Port 2 of the ABS valve. Connect the air supply line to Port 1 of the ABS valve.

c. Connect the wiring connector to the ABS valve. Hand tighten only.

d. Remove the blocks and stands.

e. Test the installation. (Refer to below.)

f. Checking the installation

**To test the modulator valve:**

a. Apply the brakes. Listen for leaks at the modulator valve.

b. Turn the ignition on and listen to the modulator valve cycle. If the valve fails to cycle, check the electrical cable connection. Make repairs as needed.

c. Drive the vehicle. Verify that the ABS indicator light operates properly.

# WIRING DIAGRAM

## 1. BASIC ECU (CAB-MOUNTED)

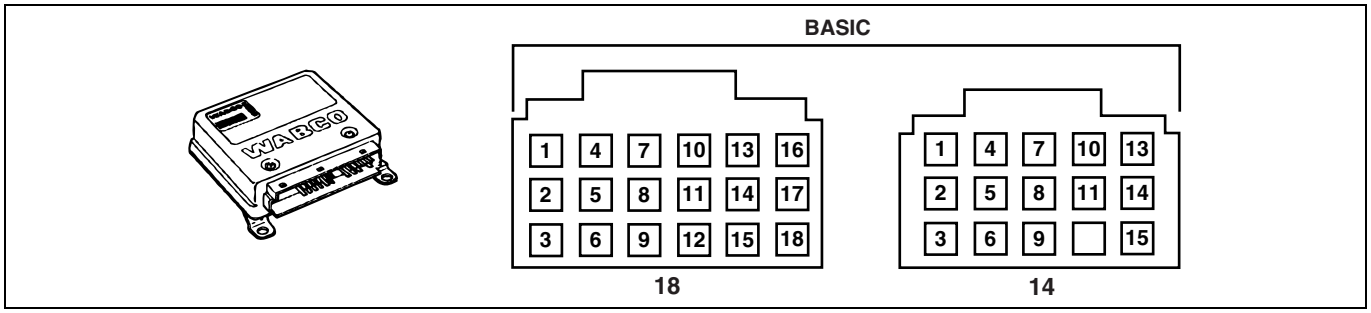


SAPH16F070800031

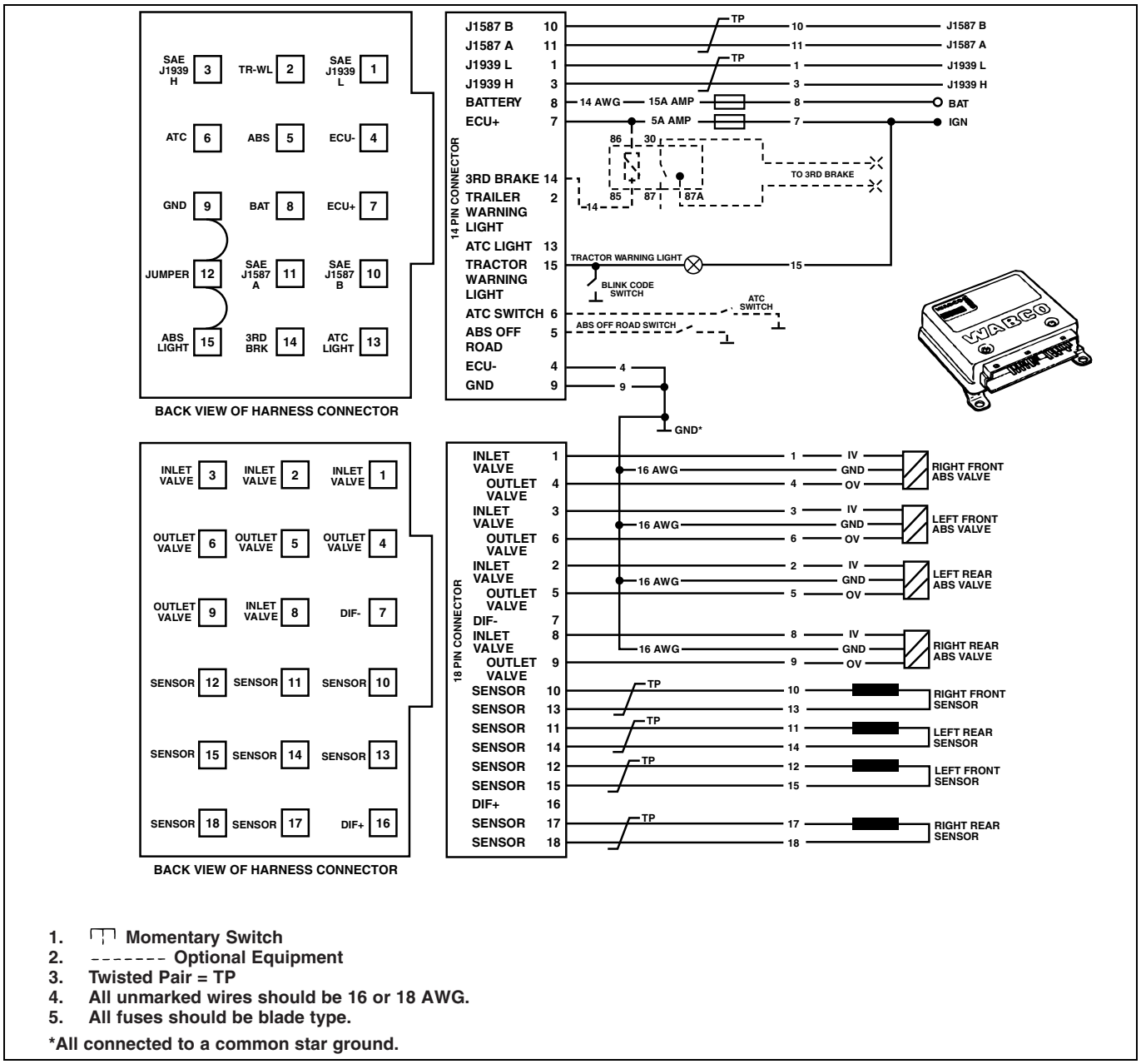


1. ⊓ Momentary Switch
2. - - - - - - - Optional Equipment
3. Twisted Pair = TP
4. All unmarked wires should be 16 or 18 AWG.
5. All fuses should be blade type.

*All connected to a common star ground.

SAPH16F070800032

## RECONFIGURATION PROCEDURE

**1. HOW TO RECONFIGURE AN ECU (E VERSION)**
**Before reconfiguring the ECU, contact ArvinMeritor's Customer Service Center at 800-535-5560 for additional information.**

**E version ECUs memorize the following components if they are connected at power-up:**

- ATC valve
- Retarder relay
- Datalink SAE J1939

Once these components have been memorized, the ECU will look for them at each power-up. If memorized component is not present, the ECU will record a fault. For example, if an ATC valve memorized, but is not present at the next power-up, the ECU records a fault. This can occur if an ECU is moved from one truck to another and one or more of the memorized components are not available on the new truck. If this occurs, use TOOLBOX Software to reconfigure the ECU. If you do not have TOOLBOX Software, follow the Manual Reconfiguration instructions listed on 9-29.

**2. TOOLBOX SOFTWARE**

**NOTICE**
**For complete instructions for using TOOLBOX Software, refer to the TOOLBOX User's Manual, TP-99102.**

To reconfigure the ECU with TOOLBOX Software, use the **Reset Memorized** command.

Select **Reset Memorized** from the pull down menu to tell the ECU to reset the memorized or "learned" components.

**3. MANUAL RECONFIGURATION**

| Action | Result | Reason |
|---|---|---|
| 1. Turn ignition ON.<br>2. Press and hold blink switch for at least three seconds.<br>NOTE: Do not hold this switch longer than seven seconds. | ABS light displays the ABS system configuration code*:<br>O Two blinks: 4S/4M<br>* The ABS light may display eight quick flashes before the system configuration code begins. | Stored faults cleared, no active faults present. Continue with reconfiguration.<br>NOTE: The reconfiguration procedure can not be conducted if there are active faults present. These must be repaired before proceeding with the reconfiguration. |
| Observe the ABS and A TC lights. | ATC light comes on and stays on. | A complete A TC system — including an ATC light — is installed. If not, the A TC light will not come on. |
| | ABS light will continuously blink the system configuration code. | ECU reconfiguring the system.<br>The ECU checks the following components and reprograms itself based on the new system:<br>O Retarder relay<br>AND/OR |
| While the configuration code is flashing, press the blink code switch three times (one second each, with a one second pause between each).<br>Turn ignition OFF. | ABS light displays four quick flashes , followed by a continuous display of the system configuration code.<br>NOTE: System configuration code continues until ignition is turned OFF. | Successfully reconfigured. |

SAPH16F070800033

A system reconfiguration is illustrated below:

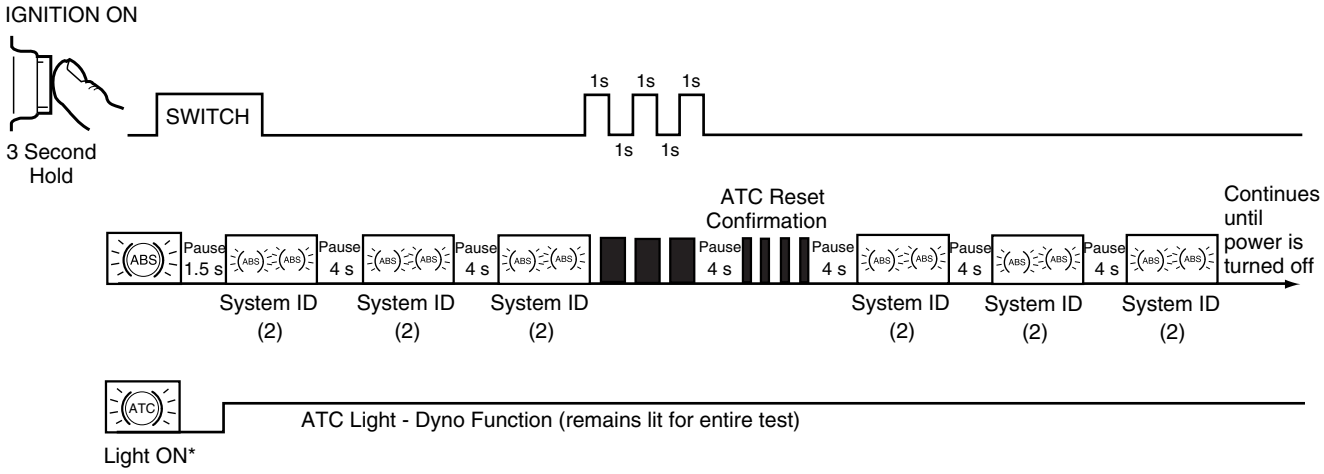


*ATC Light will light only if ATC is connected.

SAPH16F070800034

## TROUBLESHOOTING GUIDE - MERITOR WABCO ABS VALVE PACKAGE

This Troubleshooting Guide is a reference tool to help identify possible malfunctions of the ABS modulator or relay valves. It does not take the place of diagnostic tests or other service instructions.

| **ABS Valve Package Troubleshooting Guide** | | |
|---|---|---|
| **Condition** | **Possible Cause** | **Recommended Action** |
| Air constantly leaks from exhaust port of relay valve. | Internal relay valve problem. | • Replace the relay valve. |
| Air leaks from exhaust port of ABS modulator valve or relay valve when parking brake is released. | Parking brake problem.<br>OR<br>Anti-compound 2-way check valve problem. | • Service appropriate component.<br>- Refer to manufacturer's service manual for instructions. |
| Rear service brakes releasing slowly (brakes dragging) | Kinked air line.<br>Dirt buildup inside relay valve. | • Inspect/repair lines, brakes.<br>***If condition is not corrected:***<br>• Replace relay valve. |

| ABS Valve Package Troubleshooting Guide | | |
|---|---|---|
| **Condition** | **Possible Cause** | **Recommended Action** |
| valves don't cycle at power-up.<br>OR<br>Indicator light comes on (blink code or diagnostic tool indicates electrical problem with ABS valve). | Broken wire.<br>OR<br>Loose or broken terminal connection.<br>Corroded connector pins.<br>OR<br>Problem with solenoid.<br><br>Open-Style Connector<br> 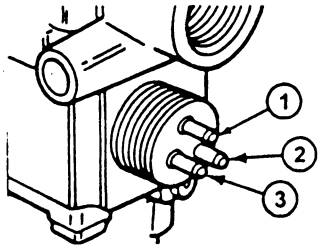 <br><br>1. Ground Terminal<br>2. Exhaust Solenoid (blue wire)<br>3. Inlet Solenoid (Brown wire)<br><br>Bayonet-Style Connector<br> 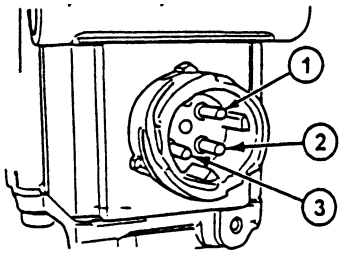 <br><br>1. Exhaust Solenoid (blue wire)<br>2. Inlet Solenoid (Brown wire)<br>3. Ground Terminal | • Check wires and connectors.<br>- Make repairs as needed.<br><br>***If condition is not corrected:***<br>• Measure resistance across each valve solenoid coil terminal and ground on the ABS modulator valve to ensure 4.0 to 8.0 ohms.<br>- If greater than 8.0 ohms, clean valve and repeat measurement.<br>- If cleaning does not solve problem, replace the ABS modulator valve.<br>- If less than 4.0 ohms, replace ABS modulator valve. |
| ABS valve package damaged. | • Road Hazards.<br>OR<br>• Vehicle Damage. | • Replace complete ABS valve package or individual component as required. |

# VEHICLE CONTROL SYSTEM (VCS)

11-001

**VEHICLE CONTROL SYSTEM.....11-2**
PRECAUTIONS FOR DIAGNOSIS.....11-2
SYSTEM BLOCK DIAGRAM.....11-4
SIGNAL CHECK HARNESS.....11-5
DIAGNOSIS USING THE PC DIAGNOSIS TOOL.....11-13
VEHICLE CONTROL ECU INSPECTION.....11-14
DIAGNOSIS MONITOR CODE AND DIAGNOSIS TROUBLE CODE TABLE.....11-20
DTC: P0500 .....11-21
DTC: P0501 .....11-25
DTC: P0562 .....11-29
DTC: P0563 .....11-32
DTC: P0617 .....11-35
DTC: P0704 .....11-38
DTC: P0850 .....11-44
DTC: P1565 .....11-50
DTC: U0101 .....11-56
DTC: U0105 .....11-59
DTC: U0155 .....11-62
NO ACTIVATION OF AUXILIARY BRAKE .....11-64
NO ACTIVATION/RELEASE OF ENGINE REVOLUTION CONTROL .....11-70
NO ACTIVATION/RELEASE OF CRUISE FUNCTION .....11-75
NO ACTIVATION/RELEASE OF ECO MODE .....11-83

# VEHICLE CONTROL SYSTEM

## PRECAUTIONS FOR DIAGNOSIS

EN01H16F04100F03001001

- Verify that connectors are properly connected before starting operations.
- Make sure to set the starter switch to the "LOCK" position before disconnecting a connector.
- Replace the part or the component that have a failure or trouble. Do not fix and reuse it.
- Delete the past malfunction code after recording. Then conduct a diagnosis again to check for present failures.
- Delete the past failure memory after completion of a diagnostic analysis.

## 1. ILLUSTRATION OF CONNECTOR AND MEASUREMENT ON TERMINAL

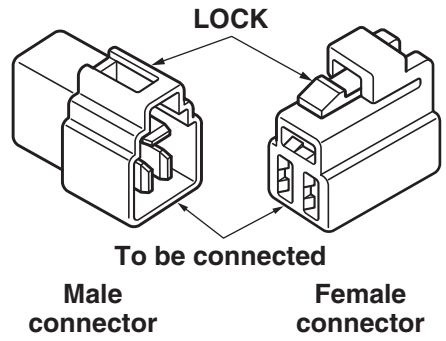


### ILLUSTRATION OF CONNECTOR

**The illustration of a connector contained in this document represents an image of a connector with its lock positioned on top as viewed from the connecting face.**

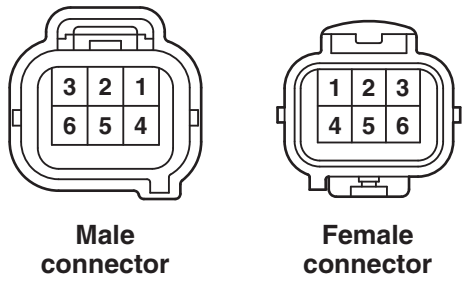


### NUMBERING OF CONNECTOR TERMINALS

**The terminals are symmetrically numbered (symmetrically reversed numbering) as viewed on the connecting faces of a pair of connectors.**
**The terminal #1 is located at the top right corner of a male connector and at the top left corner of a female connector respectively in this document.**

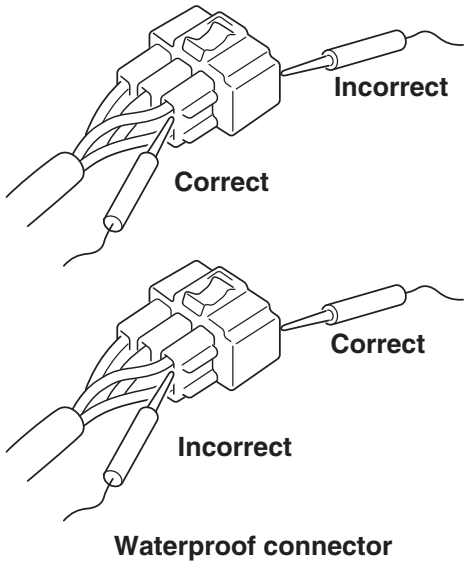


### PRECAUTIONS FOR TERMINAL MEASUREMENT

**Unless otherwise specified in this document, the illustration of a connector represents an image of a connector as viewed from the connecting face. A test probe must access the back face of a connector.**
**However, some types of connector do not allow a test probe to contact with the back face such as a waterproof connector. In such case, a test probe may be allowed to access the front face of a connector but a special care must be used to avoid a risk of damage in terminals.**

**As to a connector that is designed to use the signal check harness for terminal measurement, do not place a test probe directly onto the front or back face. Use a contact box of the connected signal check harness to take measurement on terminals.**

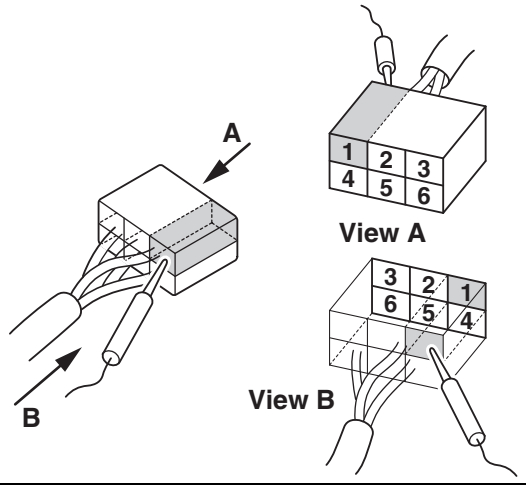


### ILLUSTRATION OF CONNECTOR AND MEASUREMENT SURFACE

**The illustration of a connector contained in this document represents an image of a connector as viewed from the connecting face. For example, the terminal #1 of a female connector is located at the top left corner of a connector as viewed from the connecting face.**
**In actual measurement on the terminal #1 of a female connector, a test probe must be placed onto the top right corner on the back face of a connector.**

SAPH16F041000001

# SYSTEM BLOCK DIAGRAM

EN01H16F04100F03001002

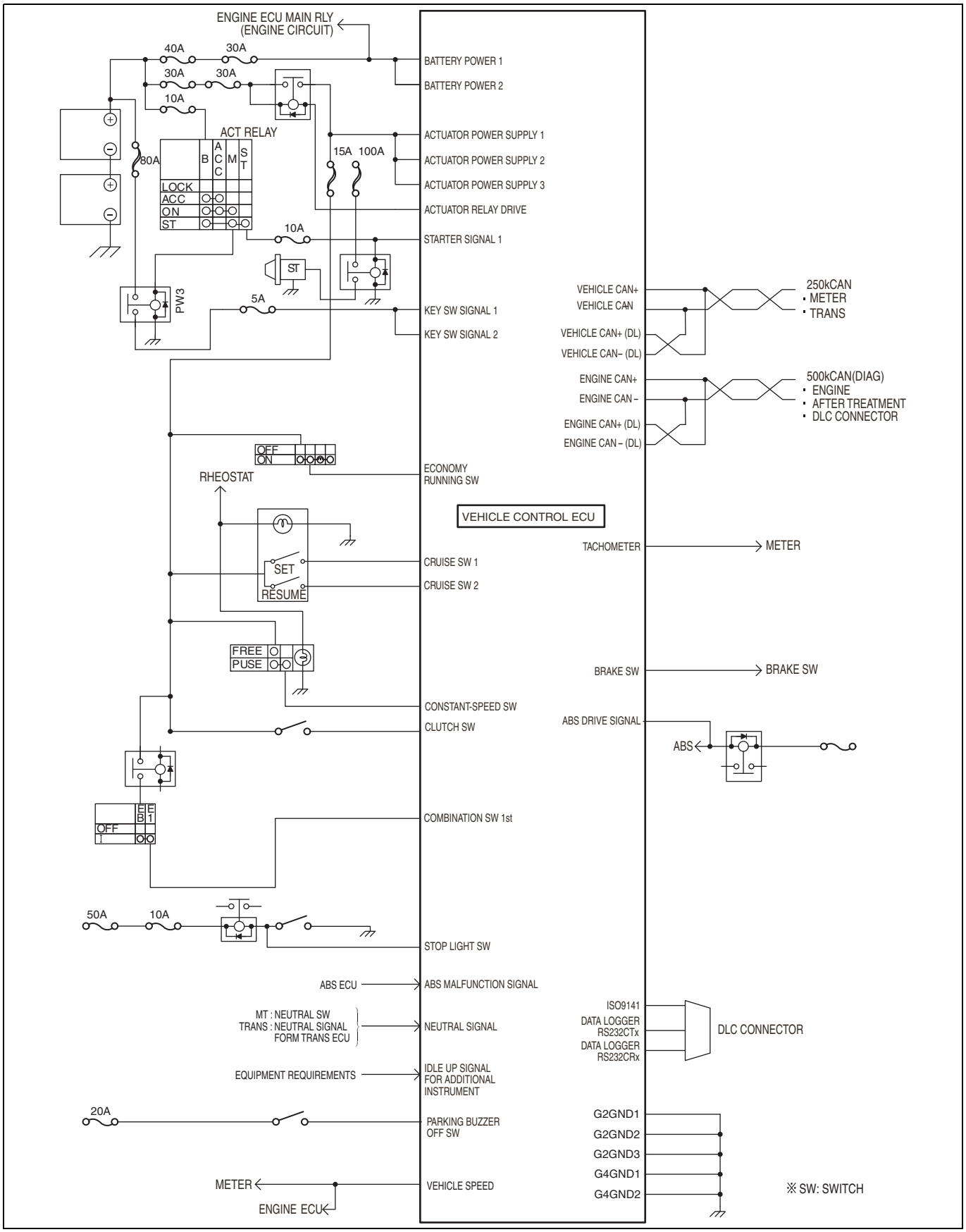


SAPH16F041000002

# SIGNAL CHECK HARNESS

EN01H16F04100F03001003

**1. MENTION OF THE SIGNAL CHECK HARNESS**

(1) HINO provides a signal check harness to check the ECU.

**⚠ CAUTION**

**To prevent damage of the ECU connector, connect the signal check harness and perform measuring by bringing the test probe into contact with the signal check harness side (Contact box).**

**HINT**

**The terminal numbers referred in text or illustrations in this document correspond to the numbering in the next section "COMPUTER (ECU) PIN ASSIGNMENT" as shown in the figure below.**

Computer (ECU) terminal signal

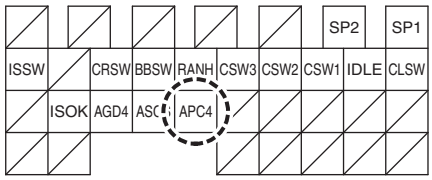


Computer (ECU) terminal No.

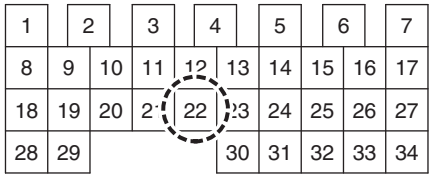


Example: A22 terminal

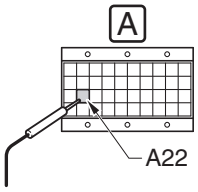


Signal check harness (contact box)

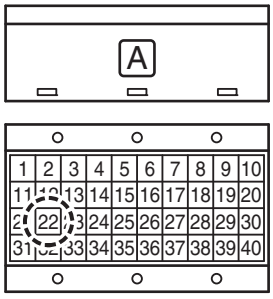


SAPH16F041000003

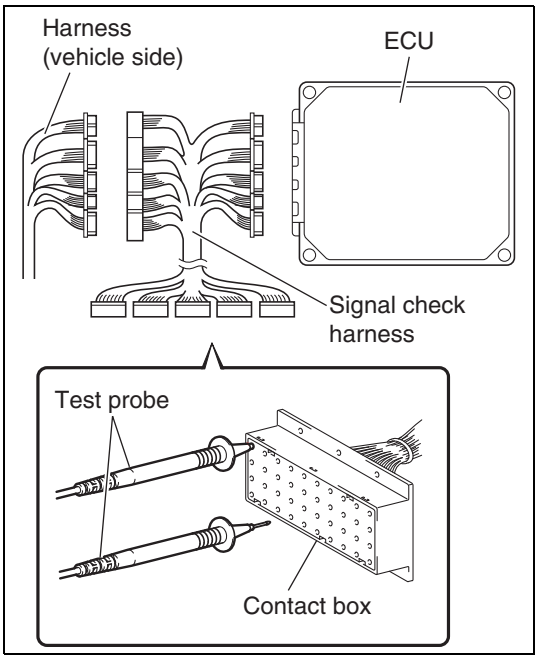


SAPH16F041000004

**2. CONNECT THE SIGNAL CHECK HARNESS.**

(1) Turn the starter switch to the "LOCK" position and disconnect the connectors from the vehicle control ECU.

(2) Connect a signal check harness to the vehicle harness and the vehicle control ECU.
**SST: Signal check harness (S0904-91080)**

## COMPUTER (ECU) PIN ASSIGNMENT

Computer (ECU) terminal signal

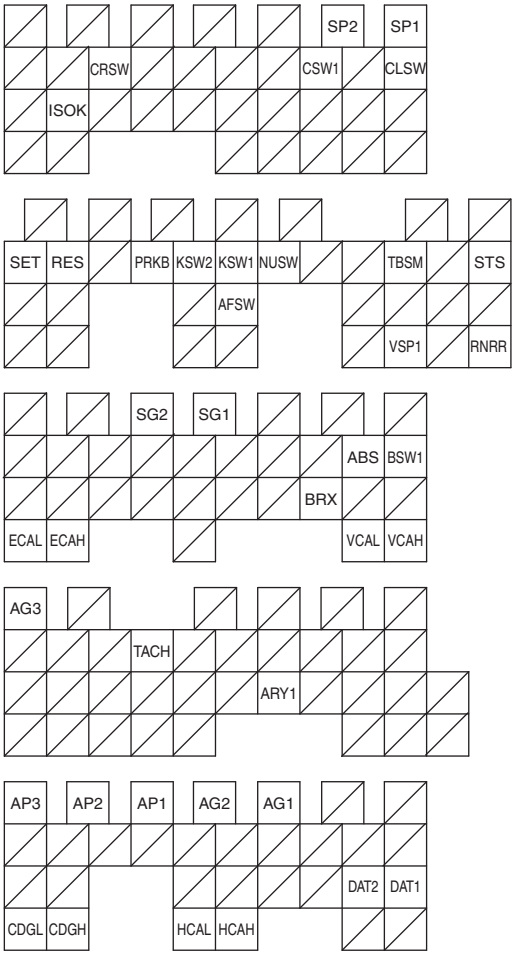


Computer (ECU) terminal No.

A

| | | | | | | | | | | |
|---|---|---|---|---|---|---|---|---|---|---|
| 1 | 2 | 3 | 4 | 5 | 6 | 7 | | | | |
| 8 | 9 | 10 | 11 | 12 | 13 | 14 | 15 | 16 | 17 | |
| 18 | 19 | 20 | 21 | 22 | 23 | 24 | 25 | 26 | 27 | |
| 28 | 29 | | | | 30 | 31 | 32 | 33 | 34 | |

B

| | | | | | | | | | | | | |
|---|---|---|---|---|---|---|---|---|---|---|---|---|
| 1 | 2 | 3 | 4 | 5 | | 6 | 7 | | | | | |
| 8 | 9 | 10 | 11 | 12 | 13 | 14 | 15 | 16 | 17 | 18 | 19 | |
| 20 | 21 | | | 22 | 23 | | | 24 | 25 | 26 | 27 | |
| 28 | 29 | | | 30 | 31 | | | 32 | 33 | 34 | 35 | |

C

| | | | | | | | | | | |
|---|---|---|---|---|---|---|---|---|---|---|
| 1 | 2 | 3 | 4 | 5 | 6 | 7 | | | | |
| 8 | 9 | 10 | 11 | 12 | 13 | 14 | 15 | 16 | 17 | |
| 18 | 19 | 20 | 21 | 22 | 23 | 24 | 25 | 26 | 27 | |
| 28 | 29 | | | 30 | | | | 31 | 32 | |

D

| | | | | | | | | | | |
|---|---|---|---|---|---|---|---|---|---|---|
| 1 | 2 | | 3 | 4 | 5 | 6 | | | | |
| 7 | 8 | 9 | 10 | 11 | 12 | 13 | 14 | 15 | 16 | |
| 17 | 18 | 19 | 20 | 21 | 22 | 23 | 24 | 25 | 26 | 27 |
| 28 | 29 | 30 | 31 | 32 | | | | 33 | 34 | 35 |

E

| | | | | | | | | | | |
|---|---|---|---|---|---|---|---|---|---|---|
| 1 | 2 | 3 | 4 | 5 | 6 | 7 | | | | |
| 8 | 9 | 10 | 11 | 12 | 13 | 14 | 15 | 16 | 17 | |
| 18 | 19 | | | 20 | 21 | 22 | 23 | 24 | 25 | |
| 26 | 27 | | | 28 | 29 | | | 30 | 31 | |

Signal check harness (CONTACT BOX) terminal No.

A

| | | | | | | | | | |
|---|---|---|---|---|---|---|---|---|---|
| 1 | 2 | 3 | 4 | 5 | 6 | 7 | 8 | 9 | 10 |
| 11 | 12 | 13 | 14 | 15 | 16 | 17 | 18 | 19 | 20 |
| 21 | 22 | 23 | 24 | 25 | 26 | 27 | 28 | 29 | 30 |
| 31 | 32 | 33 | 34 | 35 | 36 | 37 | 38 | 39 | 40 |

B

| | | | | | | | | | |
|---|---|---|---|---|---|---|---|---|---|
| 1 | 2 | 3 | 4 | 5 | 6 | 7 | 8 | 9 | 10 |
| 11 | 12 | 13 | 14 | 15 | 16 | 17 | 18 | 19 | 20 |
| 21 | 22 | 23 | 24 | 25 | 26 | 27 | 28 | 29 | 30 |
| 31 | 32 | 33 | 34 | 35 | 36 | 37 | 38 | 39 | 40 |

C

| | | | | | | | | | |
|---|---|---|---|---|---|---|---|---|---|
| 1 | 2 | 3 | 4 | 5 | 6 | 7 | 8 | 9 | 10 |
| 11 | 12 | 13 | 14 | 15 | 16 | 17 | 18 | 19 | 20 |
| 21 | 22 | 23 | 24 | 25 | 26 | 27 | 28 | 29 | 30 |
| 31 | 32 | 33 | 34 | 35 | 36 | 37 | 38 | 39 | 40 |

D

| | | | | | | | | | |
|---|---|---|---|---|---|---|---|---|---|
| 1 | 2 | 3 | 4 | 5 | 6 | 7 | 8 | 9 | 10 |
| 11 | 12 | 13 | 14 | 15 | 16 | 17 | 18 | 19 | 20 |
| 21 | 22 | 23 | 24 | 25 | 26 | 27 | 28 | 29 | 30 |
| 31 | 32 | 33 | 34 | 35 | 36 | 37 | 38 | 39 | 40 |

E

| | | | | | | | | | |
|---|---|---|---|---|---|---|---|---|---|
| 1 | 2 | 3 | 4 | 5 | 6 | 7 | 8 | 9 | 10 |
| 11 | 12 | 13 | 14 | 15 | 16 | 17 | 18 | 19 | 20 |
| 21 | 22 | 23 | 24 | 25 | 26 | 27 | 28 | 29 | 30 |
| 31 | 32 | 33 | 34 | 35 | 36 | 37 | 38 | 39 | 40 |

SAPH16F041000005

## COMPUTER (ECU) PIN CONNECTION

- The terminal number in the table correspond with the contact box of signal check harness.

| CONTACT BOX (A) | | | | | |
|---|---|---|---|---|---|
| **No.** | **Signal** | **Connection destination** | **No.** | **Signal** | **Connection destination** |
| 1 | – | | 18 | – | |
| 2 | – | | 19 | ISOK | Diagnosis connector |
| 3 | – | | 20 | – | |
| 4 | – | | 21 | – | |
| 5 | – | | 22 | – | |
| 6 | SP2 | Fuse 7B | 23 | – | |
| 7 | SP1 | Fuse 7B | 24 | – | |
| 8 | – | | 25 | – | |
| 9 | – | | 26 | – | |
| 10 | CRSW | Auto cruising switch | 27 | – | |
| 11 | – | | 28 | – | |
| 12 | – | | 29 | – | |
| 13 | – | | 30 | – | |
| 14 | – | | 31 | – | |
| 15 | CSW1 | Combination switch | 32 | – | |
| 16 | – | | 33 | – | |
| 17 | CLSW | Clutch switch | 34 | – | |

| CONTACT BOX (B) | | | | | |
|---|---|---|---|---|---|
| **No.** | **Signal** | **Connection destination** | **No.** | **Signal** | **Connection destination** |
| 1 | – | | 19 | STS | Starter switch signal |
| 2 | – | | 20 | – | |
| 3 | – | | 21 | – | |
| 4 | – | | 22 | – | |
| 5 | – | | 23 | AFSW | Economy running switch |
| 6 | – | | 24 | – | |
| 7 | – | | 25 | – | |
| 8 | SET | Auto cruising switch 1 | 26 | – | |
| 9 | RES | Auto cruising switch 2 | 27 | – | |
| 10 | – | | 28 | – | |
| 11 | PRKB | Parking buzzer off switch | 29 | – | |
| 12 | KSW2 | Key switch 2 | 30 | – | |
| 13 | KSW1 | Key switch 1 | 31 | – | |
| 14 | NUSW | Neutral switch | 32 | – | |
| 15 | – | | 33 | VSP1 | Speed sensor |
| 16 | – | | 34 | – | |
| 17 | TBSW | Brake switch | 35 | RNRR | Idle up signal |
| 18 | – | | | | |

| CONTACT BOX (C) | | | | | |
|---|---|---|---|---|---|
| **No.** | **Signal** | **Connection destination** | **No.** | **Signal** | **Connection destination** |
| 1 | – | | 17 | BSW1 | Stop light switch |
| 2 | – | | 18 | – | |
| 3 | SG2 | Ground | 19 | – | |
| 4 | SG1 | Ground | 20 | – | |
| 5 | – | | 21 | – | |
| 6 | – | | 22 | – | |
| 7 | – | | 23 | – | |
| 8 | – | | 24 | – | |
| 9 | – | | 25 | BRX | ABS light |
| 10 | – | | 26 | – | |
| 11 | – | | 27 | – | |
| 12 | – | | 28 | ECAL | Junction CAN |
| 13 | – | | 29 | ECAH | Junction CAN |
| 14 | – | | 30 | – | |
| 15 | – | | 31 | VCAL | Junction CAN |
| 16 | ABS | ABS cut relay | 32 | VCAH | Junction CAN |

| CONTACT BOX (D) | | | | | |
|---|---|---|---|---|---|
| **No.** | **Signal** | **Connection destination** | **No.** | **Signal** | **Connection destination** |
| 1 | AG3 | Ground | 19 | – | |
| 2 | – | | 20 | – | |
| 3 | – | | 21 | – | |
| 4 | – | | 22 | – | |
| 5 | – | | 23 | ARY1 | Actuator relay |
| 6 | – | | 24 | – | |
| 7 | – | | 25 | – | |
| 8 | – | | 26 | – | |
| 9 | – | | 27 | – | |
| 10 | TACH | Tachometer | 28 | – | |
| 11 | – | | 29 | – | |
| 12 | – | | 30 | – | |
| 13 | – | | 31 | – | |
| 14 | – | | 32 | – | |
| 15 | – | | 33 | – | |
| 16 | – | | 34 | – | |
| 17 | – | | 35 | – | |
| 18 | – | | | | |

| CONTACT BOX (E) | | | | | |
|---|---|---|---|---|---|
| **No.** | **Signal** | **Connection destination** | **No.** | **Signal** | **Connection destination** |
| 1 | AP3 | Fuse7B | 17 | – | |
| 2 | AP2 | Fuse7B | 18 | – | |
| 3 | AP1 | Fuse7B | 19 | – | |
| 4 | AG2 | Fuse7B | 20 | – | |
| 5 | AG1 | Fuse7B | 21 | – | |
| 6 | – | | 22 | – | |
| 7 | – | | 23 | – | |
| 8 | – | | 24 | DAT2 | Data logger RxD |
| 9 | – | | 25 | DAT1 | Data logger TxD |
| 10 | – | | 26 | CDGL | Junction CAN |
| 11 | – | | 27 | CDGH | Junction CAN |
| 12 | – | | 28 | HCAL | Junction CAN |
| 13 | – | | 29 | HCAH | Junction CAN |
| 14 | – | | 30 | – | |
| 15 | – | | 31 | – | |
| 16 | – | | | | |

# DIAGNOSIS USING THE PC DIAGNOSIS TOOL

EN01H16F04100F03001004

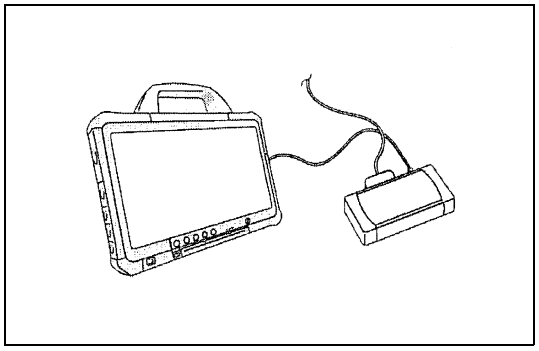

SAPH16F041000006

## 1. DIAGNOSIS TOOL

(1) Trouble diagnosis can be performed using the PC diagnosis tool. By connection to the trouble diagnosis connector, the trouble location is indicated.

**PC:**
**Laptop computer**
**Complete function of HINO DX II is conformed on "Panasonic CF-D1".**

**SST:**
**Computer interface**
**(DENSO DST-i set without LCD)**
**Without Bluetooth® (95171-01021)**
**With Bluetooth® (95171-01041)**
**(DENSO DST-i set with LCD)**
**Without Bluetooth® (95171-01031)**
**With Bluetooth® (95171-01051)**
**Diagnosis software: Hino Diagnostic explorer II (HINO DX II )**

**NOTICE**
**Only ECU reprogramming can be performed by authorized HINO dealer.**

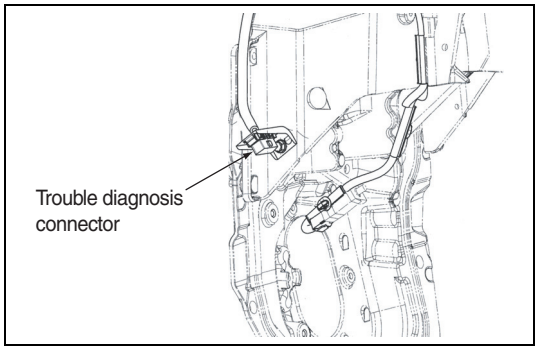


SAPH16F041000007

## 2. CONNECT THE PC DIAGNOSIS TOOL

(1) Turn the starter switch to the "LOCK" position.
(2) Connect the PC diagnosis tool to the trouble diagnosis connector on the left side of steering column.

# VEHICLE CONTROL ECU INSPECTION

EN01H16F04100F03001005

## INFORMATION: VEHICLE CONTROL ECU INSPECTION

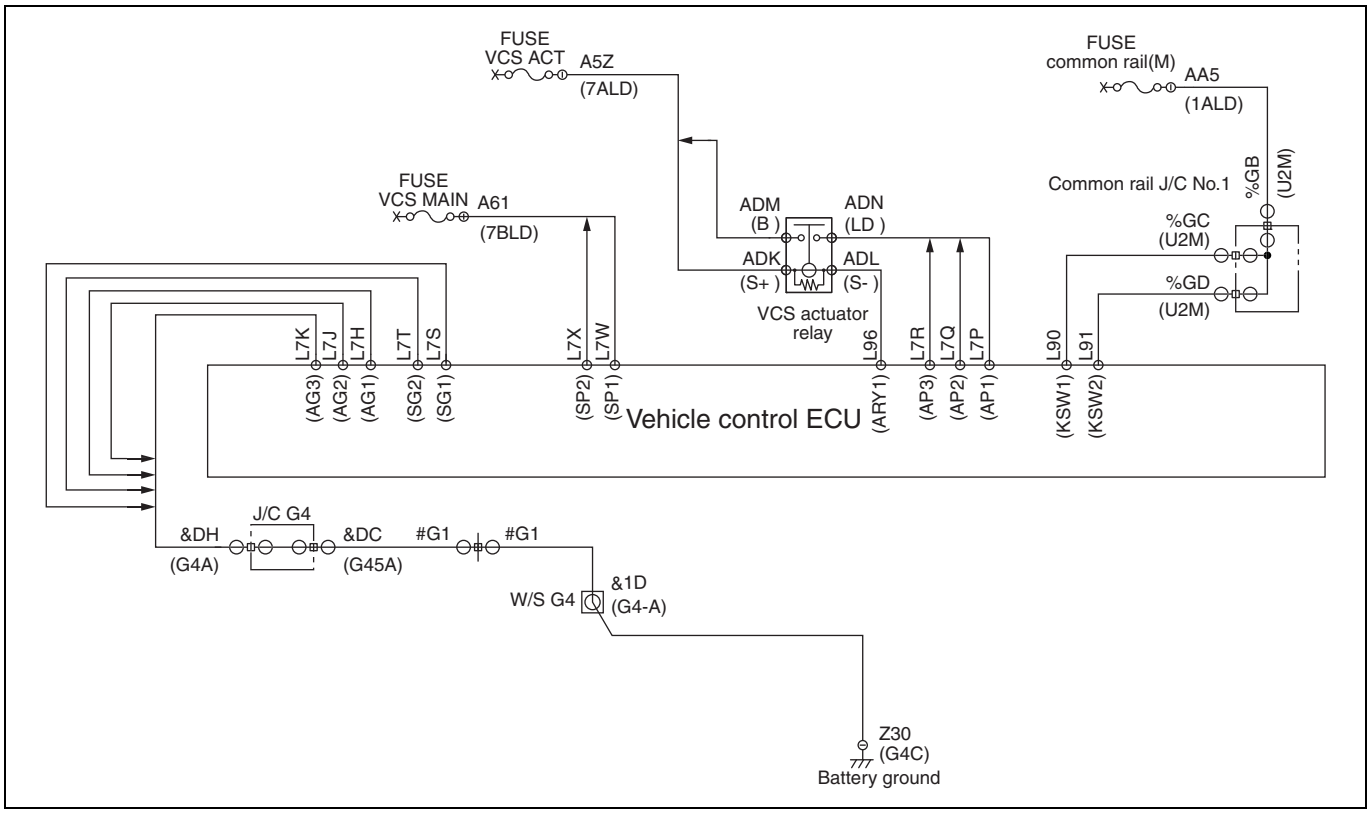


SAPH16F041000008

## INSPECTION PROCEDURE: VEHICLE CONTROL ECU INSPECTION

| 1 | Inspect the voltage of power supply [HINO DX II ] |
|---|---|

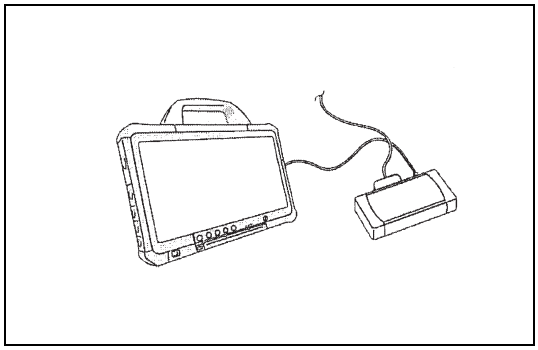

SAPH16F041000009

1. Set the starter switch to the "LOCK" position.
2. Connect the vehicle to HINO DX II .
3. Set the starter switch to the "ON" position.
4. Select [Vehicle control ECU] on HINO DX II .
5. Select following items from the [Data monitor Setting] menu, and measure them.

| Measurement conditions | Monitoring items | Standard values |
|---|---|---|
| Starter switch: ON | Voltage | 10 – 16 V |

**Do the measurements meet the standard value?**

**YES** → **Go to step 4.**

**NO** → **Go to step 2.**

| 2 | Inspect the ground circuit of the vehicle control ECU |
|---|---|

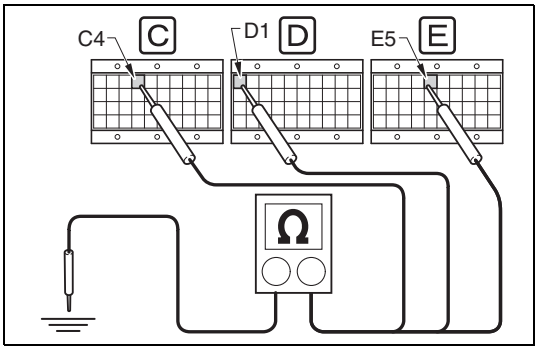


SAPH16F041000010

1. Set the starter switch to the "LOCK" position.
2. Connect the signal check harness to the vehicle control ECU. (Do not connect the harness to the ECU.)
3. Use the electrical tester to measure the resistance between the terminals of the vehicle control ECU (signal check harness) and the ground.

| Measurement conditions | Tester connections | Standard values |
|---|---|---|
| **Starter switch: LOCK** | **Vehicle control ECU (signal check harness) SG1(C4) – Ground AG3(D1) – Ground AG1(E5) – Ground** | **Below 1 Ω** |

**Do the measurements meet the standard value?**

**YES**

**Go to step 3.**

**NO**

**Repair or replace the ground circuit. Perform After-inspection work. (Clear all past DTC. Check no DTC is stored after test drive.)**

| 3 | Inspect the power supply circuit of the vehicle control ECU (Power supply of battery) |
|---|---|

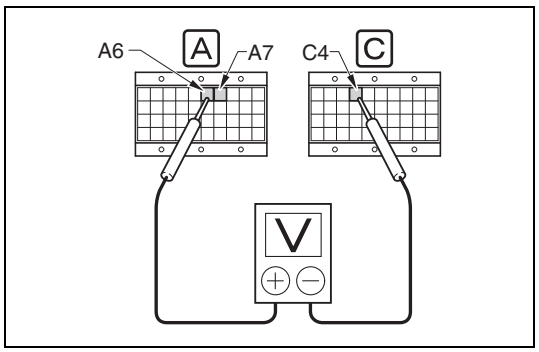


SAPH16F041000011

1. Use the electrical tester to measure the voltage between the terminals of the vehicle control ECU (signal check harness).

| Measurement conditions | Tester connections | Standard values |
|---|---|---|
| Starter switch: LOCK | Vehicle control ECU (signal check harness) SP1(A7) – SG1(C4) SP2(A6) – SG1(C4) | 10 – 16 V |

**Do the measurements meet the standard value?**

**YES**

**Replace the vehicle control ECU.**
**Perform After-inspection work. (Clear all past DTC. Check no DTC is stored after test drive.)**

**NO**

**Repair or replace the power supply circuit between fuse and the vehicle control ECU.**
**Perform After-inspection work. (Clear all past DTC. Check no DTC is stored after test drive.)**

| 4 | Inspect the starter switch [HINO DX II ] |
|---|---|

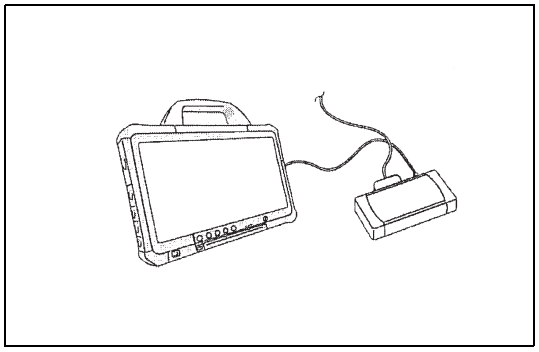

SAPH16F041000012

1. Set the starter switch to the "ON" position.
2. Select [Vehicle control ECU] on HINO DX II .
3. Select following items from the [Data monitor Setting] menu, and measure them.

| Measurement conditions | Monitoring items | Standard values |
|---|---|---|
| Starter switch: ON | Starter switch | ON |

**Do the measurements meet the standard value?**

**YES**

**Go to step 6.**

**NO**

**Go to step 5.**

| 5 | Inspect the power supply circuit of the vehicle control ECU (Power supply of starter switch) |
|---|---|

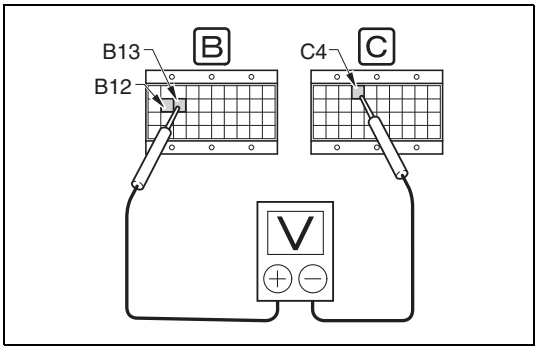


SAPH16F041000013

1. Use the electrical tester to measure the voltage between the terminals of the vehicle control ECU (signal check harness).

| Measurement conditions | Tester connections | Standard values |
|---|---|---|
| Starter switch: ON | Vehicle control ECU (signal check harness) KSW1(B13) – SG1(C4) KSW2(B12) – SG1(C4) | 10 – 16 V |

**Do the measurements meet the standard value?**

**YES**

**Replace the vehicle control ECU.**
**Perform After-inspection work. (Clear all past DTC. Check no DTC is stored after test drive.)**

**NO**

**Repair or replace the power supply circuit between Common rail J/C No.1 and the vehicle control ECU.**
**Perform After-inspection work. (Clear all past DTC. Check no DTC is stored after test drive.)**

| 6 | Inspect the VCS actuator relay [HINO DX II ] |
|---|---|

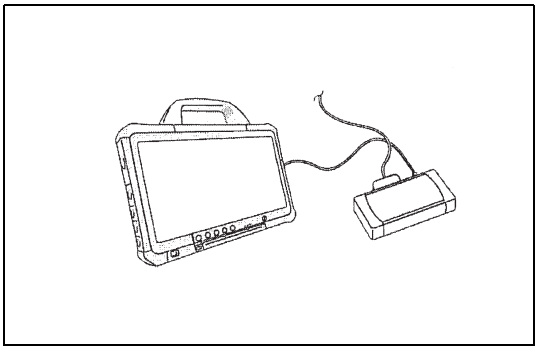

SAPH16F041000014

1. Select [Vehicle control ECU] and on HINO DX II .
2. Select following items from the [Data monitor Setting] menu, and measure them.

| Measurement conditions | Monitoring items | Standard values |
|---|---|---|
| Starter switch: ON | Actuator relay | ON |

**Do the measurements meet the standard value?**

**YES**

**Procedure completed.**
**Perform After-inspection work. (Clear all past DTC. Check no DTC is stored after test drive.)**

**NO**

**Go to step 7.**

| 7 | **Inspect the power supply circuit of the vehicle control ECU (Power supply of the VCS actuator relay activation)** |
|---|---|

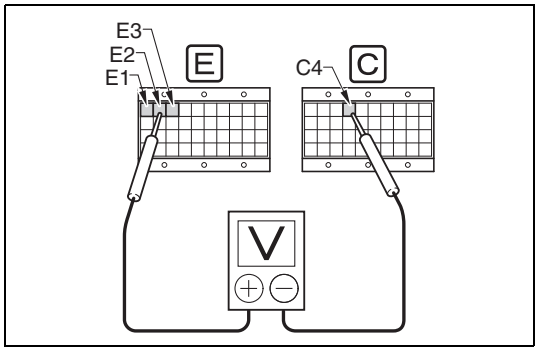


SAPH16F041000015

1. Use the electrical tester to measure the voltage between the terminals of the vehicle control ECU (signal check harness).

| Measurement conditions | Tester connections | Standard values |
|---|---|---|
| **Starter switch: ON** | **Vehicle control ECU (signal check harness)**<br>**AP3(E1) –SG1 (C4)**<br>**AP2(E2) –SG1 (C4)**<br>**AP2(E2) –SG1 (C4)** | **10 – 16 V** |

**Do the measurements meet the standard value?**

**YES**

**Replace the vehicle control ECU.**
**Perform After-inspection work. (Clear all past DTC. Check no DTC is stored after test drive.)**

**NO**

**Repair or replace the VCS actuator relay and the VCS actuator relay circuit.**
**Perform After-inspection work. (Clear all past DTC. Check no DTC is stored after test drive.)**

# DIAGNOSIS MONITOR CODE AND DIAGNOSIS TROUBLE CODE TABLE

EN01H16F04100F03001006

**NOTICE**
**DTC No.: Diagnosis Trouble Code (Using the PC diagnosis tool)**

| DTC No. | DIAGNOSIS ITEM |
|---|---|
| P0704 | Clutch switch malfunction |
| P1565 | Cruise switch malfunction |
| P0850 | Neutral switch malfunction |
| P0501 | Vehicle speed sensor signal error |
| P0500 | Vehicle speed sensor input open/short |
| P0617 | Starter switch battery short |
| P0563 | VBB fail trouble (High range) |
| P0562 | VBB fail trouble (Low range) |
| U0101 | Disconnection of bus line between Automatic transmission controller and vehicle control |
| U0155 | Disconnection of bus line between meter and vehicle control |
| U0105 | Blackout in the engine CAN |

# DTC: P0500

EN01H16F04100F03001007

## DTC: P0500 Vehicle speed sensor input open/short

INFORMATION




SAPH16F041000016

**1. Technical description**

- The vehicle control ECU consistently measures pulses from the vehicle speed sensor through the combination meter.

**<Description of malfunction>**

- Abnormal pulses from the vehicle speed sensor through the combination meter cannot.

**2. DTC set condition**

(1) Check conditions
Starter switch ON. Engine speed is 800 r/min or more. Gears are engaged. The fuel injection quantity meet the specified value or more. Engine coolant temperature is 50 °C {122 °F} or higher. Battery voltage is in the range of 10 V to 16 V.

(2) Judgement criteria
Vehicle speed that is recognized in the vehicle control ECU remains at a vehicle speed of 0 km/h {0 mph} for 1 seconds or longer.

**3. Reset condition**

- Immediately after normal operation is restored.

**4. Indication, warning or system control regulation when the DTC is set.**

- SVS light: ON

**5. Symptoms on the vehicle when the DTC is set**

**<Symptoms on the vehicle due to backup control (fail safe) - Action arising from backup control>**

- –

**<Symptoms on the vehicle due to malfunction>**

- Economy run is not available.
- Exhaust brake is not available.
- Cruise control is not available.

**6. Pre-inspection work**

- Check that the battery voltage is in the normal range.

**7. After-inspection work**

- Clear all past DTCs.
- Check that no DTC is detected after test drive.

**8. Estimated failure factors**

- Vehicle speed sensor abnormal
- Malfunction of pulse modulator (in combination meter)
- Harness disconnection or short-circuit
- Irregular contact (disconnection or poor fit of connector)
- Malfunction of vehicle control ECU

## INSPECTION PROCEDURE: P0500

| 1 | Read the DTC [HINO DX II ] |
|---|---|

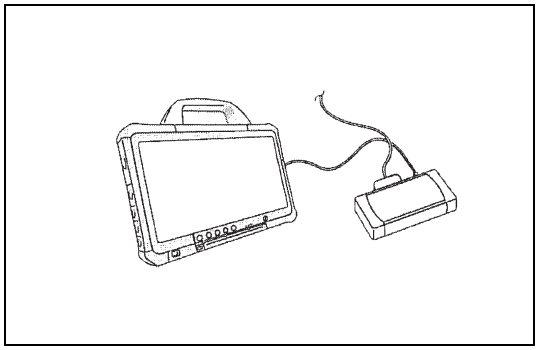

SAPH16F041000017

1. Set the starter switch to the "LOCK" position.
2. Connect the vehicle to HINO DX II .
3. Set the starter switch to the "ON" position.
4. Select [Engine] and check if the DTC (P0500) has been detected.

**Has DTC (P0500) been detected in the engine ECU?**

| YES | NO |
|---|---|
| Go to diagnosis procedure of DTCs in the engine ECU. | Go to step 2. |

| 2 | Inspect the vehicle control ECU |
|---|---|

1. Perform "VEHICLE CONTROL ECU INSPECTION", ensure that there is no other abnormality.

**Was any failure found?**

| YES | NO |
|---|---|
| Repair or replace the failure part.<br>Perform "After-inspection work" of INFORMATION section. | Go to step 3. |

| 3 | Inspect for open-circuits in the wire harness of the vehicle speed signal circuit |
|---|---|

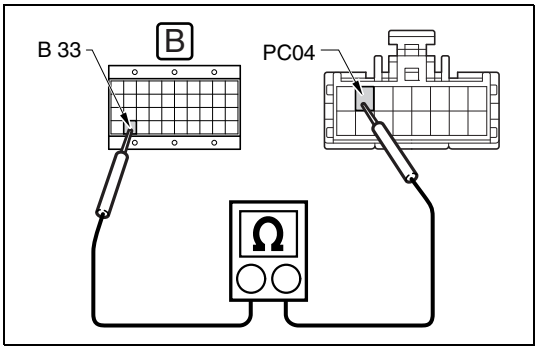

SAPH16F041000018

1. Set the starter switch to the "LOCK" position.
2. Disconnect the combination meter connector.
3. Connect the signal check harness to the engine ECU vehicle-side harness. (Do not connect the harness to the ECU.)
4. Use the electrical tester to measure the resistance between the terminals of the combination meter vehicle-side connector and vehicle control ECU (signal check harness).

| Measurement conditions | Tester connections | Standard values |
|---|---|---|
| **Starter switch: LOCK** | **Combination meter vehicle-side connector – Vehicle control ECU (signal check harness) PC04 – VSP1(B33)** | **Less than 1 Ω** |

**Do the measurements meet the standard value?**

**YES**

**Replace the vehicle control ECU.**
**Perform "After-inspection work" of INFORMATION section.**

**NO**

**Repair or replace the wire harness.**
**Perform "After-inspection work" of INFORMATION section.**

# DTC: P0501

EN01H16F04100F03001008

## DTC: P0501 Vehicle speed sensor signal error

INFORMATION




SAPH16F041000019

**1. Technical description**

- The vehicle control ECU consistently measures pulses from the vehicle speed sensor through the combination meter.

**<Description of malfunction>**

- Abnormal pulses from the vehicle speed sensor through the combination meter.

**2. DTC set condition**

(1) Check conditions
Starter switch ON.
The fuel injection quantity meet the specified value or more.
Battery voltage is in the range of 10 V to 16 V.

(2) Judgement criteria
Output of the vehicle speed sensor remains at a vehicle speed of 200 km/h {125 mph} for 5 seconds or longer.

**3. Reset condition**

- Immediately after normal operation is restored.

**4. Indication, warning or system control regulation when the DTC is set.**

- SVS light: ON

**5. Symptoms on the vehicle when the DTC is set**

**<Symptoms on the vehicle due to backup control (fail safe) - Action arising from backup control>**

- –

**<Symptoms on the vehicle due to malfunction>**

- Economy run is abnormal.
- Exhaust brake is abnormal.
- Cruise control is abnormal.

**6. Pre-inspection work**

- Check that the battery voltage is in the normal range.

**7. After-inspection work**

- Clear all past DTCs.
- Check that no DTC is detected after test drive.

**8. Estimated failure factors**

- Vehicle speed sensor abnormal
- Malfunction of pulse modulator (in combination meter)
- Irregular contact (disconnection or poor fit of connector)
- Malfunction of vehicle control ECU
- Harness disconnection or short-circuit

## INSPECTION PROCEDURE: P0501

| 1 | Read the DTC [HINO DX II ] |
|---|---|

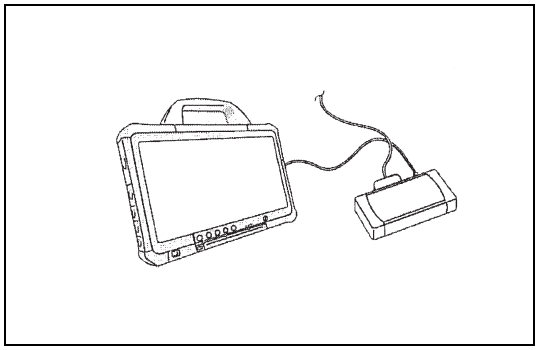

SAPH16F041000020

1. Set the starter switch to the "LOCK" position.
2. Connect the vehicle to HINO DX II .
3. Set the starter switch to the "ON" position.
4. Select [Engine] and check if the DTC (P0501) has been detected.

**Has DTC (P0501) been detected in the engine ECU?**

**YES**

**Go to diagnosis procedure of DTCs in the engine ECU.**

**NO**

**Go to step 2.**

| 2 | Inspect the vehicle control ECU |
|---|---|

1. Perform "VEHICLE CONTROL ECU INSPECTION", ensure that there is no other abnormality.

**Was any failure found?**

**YES**

**Repair or replace the failure part.**
**Perform "After-inspection work" of INFORMATION section.**

**NO**

**Go to step 3.**

| 3 | Inspect for open-circuits in the wire harness of the vehicle speed signal circuit |
|---|---|

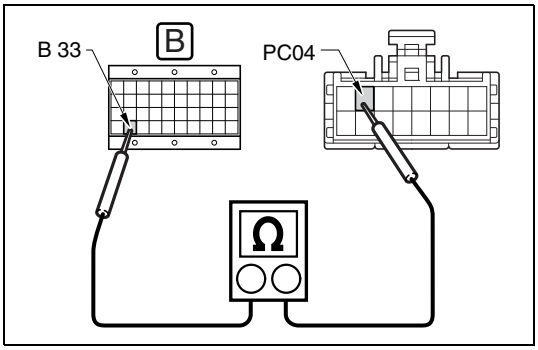


SAPH16F041000021

1. Set the starter switch to the "LOCK" position.
2. Disconnect the combination meter connector.
3. Connect the signal check harness to the engine ECU vehicle-side harness. (Do not connect the harness to the ECU.)
4. Use the electrical tester to measure the resistance between the terminals of the combination meter vehicle-side connector and vehicle control ECU (signal check harness).

| Measurement conditions | Tester connections | Standard values |
|---|---|---|
| **Starter switch: LOCK** | **Combination meter vehicle-side connector – Vehicle control ECU (signal check harness) PC04 – VSP1(B33)** | **Less than 1 Ω** |

**Do the measurements meet the standard value?**

**YES**

**Replace the vehicle control ECU.**
**Perform "After-inspection work" of INFORMATION section.**

**NO**

**Repair or replace the wire harness.**
**Perform "After-inspection work" of INFORMATION section.**

# DTC: P0562

EN01H16F04100F03001009

## DTC: P0562 VBB fail trouble (High range)

INFORMATION

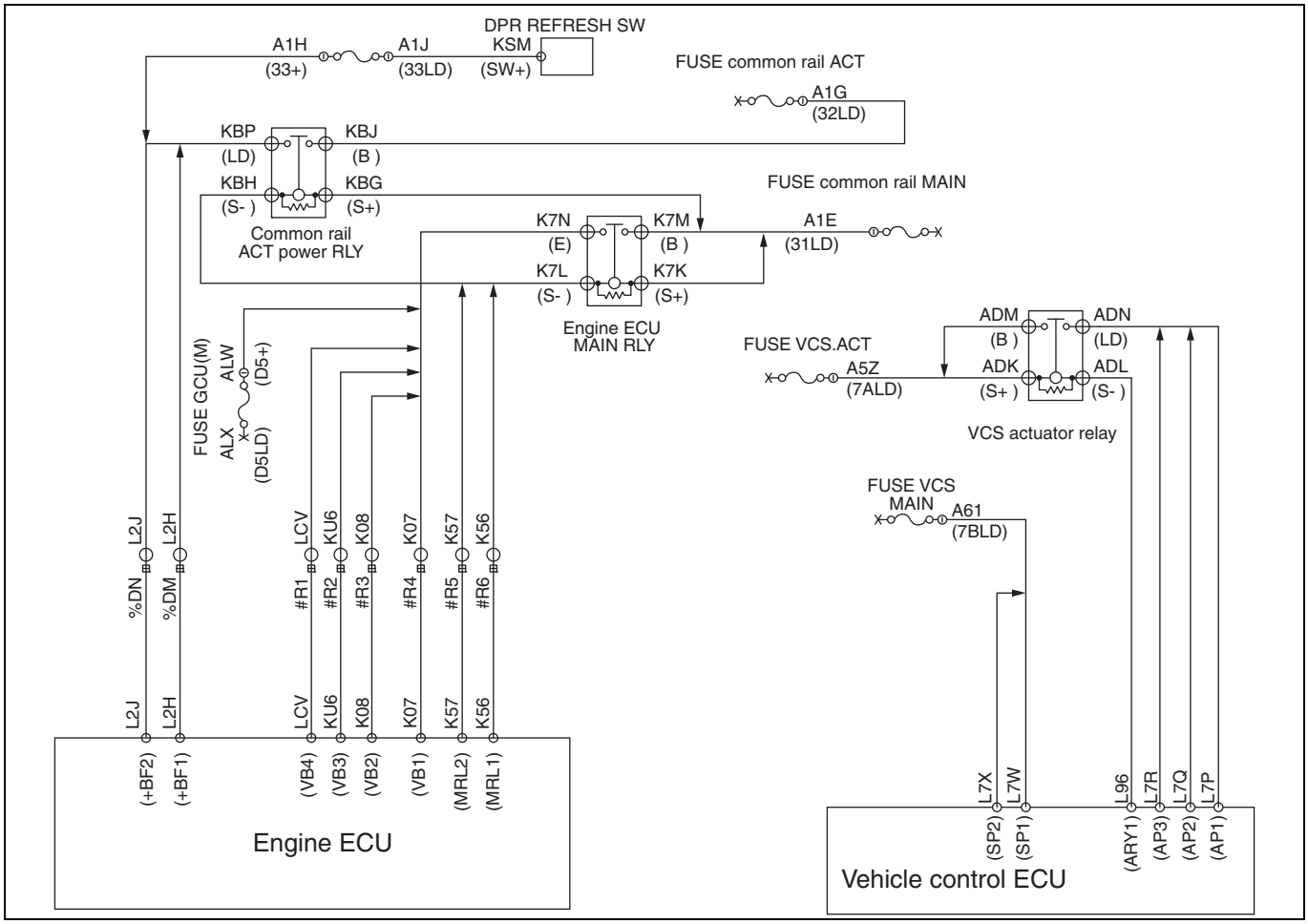


SAPH16F041000022

**1. Technical description**

**<Description of malfunction>**

- Abnormally low battery voltage (vehicle control ECU power supply circuit).

**2. DTC set condition**

(1) DTC detection condition
Starter switch ON.

(2) Judgement criteria
Battery voltage (Vehicle control ECU): 0 V.

**3. Reset condition**

- After restoration to normal condition

**4. Indication, warning or system control regulation when the DTC is set.**

- SVS light: OFF

**5. Symptoms on the vehicle when the DTC is set**

**<Symptoms on the vehicle due to backup control (fail safe) - Action arising from backup control>**

- –

**<Symptoms on the vehicle due to malfunction>**

- Economy run is not available.
- Exhaust brake is not available.
- Cruise control is not available.
- Engine revolution control is not available.

**6. Pre-inspection work**

- Check that the battery voltage is in the normal range.

**7. After-inspection work**

- Clear all past DTCs.
- Check that no DTC is detected after test drive.

**8. Estimated failure factors**

- Battery terminals: Disconnection
- Battery: Discharged
- Harnesses and terminals: Disconnection, short circuit, irregular contact, looseness
- Connectors, harnesses and terminals: Disconnection, irregular contact, looseness
- Vehicle control ECU: Malfunction

## INSPECTION PROCEDURE: P0562

| 1 | Read the DTC [HINO DX II ] |
|---|---|

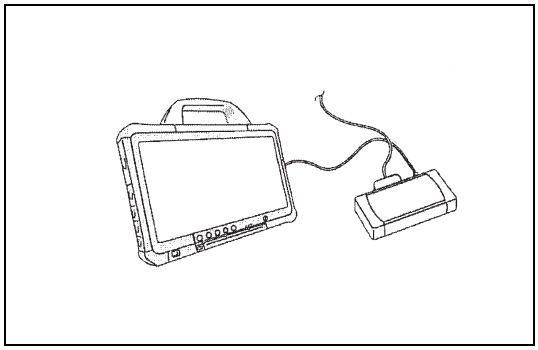

SAPH16F041000023

1. Set the starter switch to the "LOCK" position.
2. Connect the vehicle to HINO DX II .
3. Set the starter switch to the "ON" position.
4. Select [Engine] and check if the DTC (P0562) has been detected.

**Has DTC (P0562) been detected in the engine ECU?**

**YES**

**Go to diagnosis procedure of DTCs in the engine ECU.**

**NO**

**Go to step 2.**

| 2 | Inspect the vehicle control ECU |
|---|---|

1. Perform "VEHICLE CONTROL ECU INSPECTION", ensure that there is no other abnormality.

**Was any failure found?**

**YES**

**Repair or replace the failure part.**
**Perform "After-inspection work" of INFORMATION section.**

**NO**

**Replace the vehicle control ECU.**
**Perform "After-inspection work" of INFORMATION section.**

# DTC: P0563

EN01H16F04100F03001010

## DTC: P0563 VBB fail trouble (High range)

INFORMATION

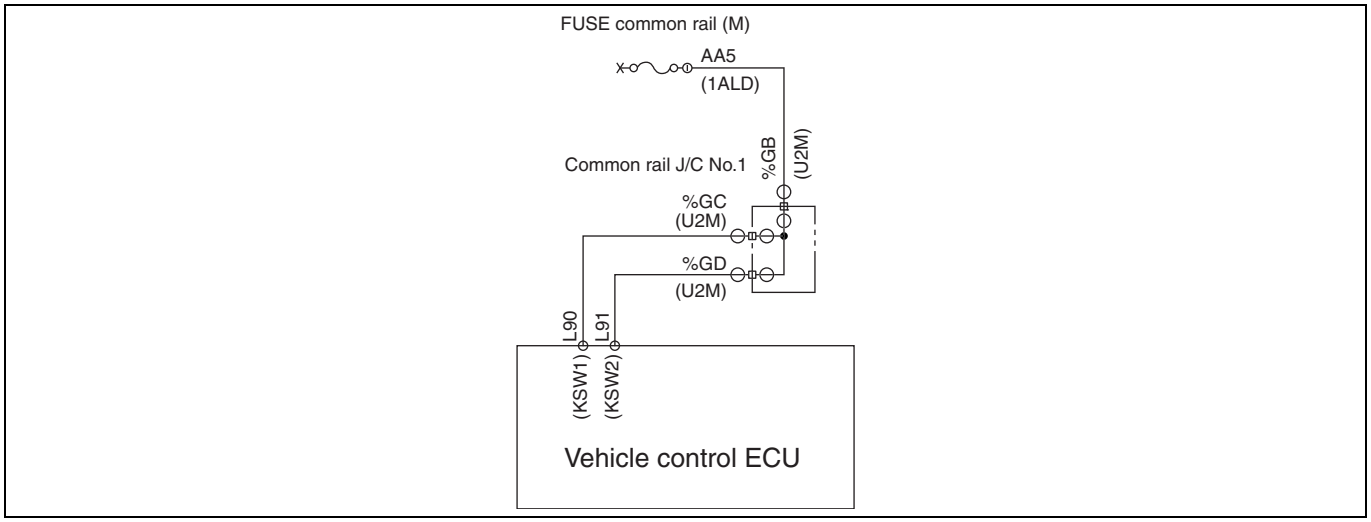


SAPH16F041000024

**1. Technical description**

**<Description of malfunction>**

- Abnormally high battery voltage (vehicle control ECU power supply circuit).

**2. DTC set condition**

(1) DTC detection condition
Starter switch ON.

(2) Judgement criteria
Vehicle control ECU power supply voltage is 16 V or more.

**3. Reset condition**

- After restoration to normal condition

**4. Indication, warning or system control regulation when the DTC is set.**

- SVS light: OFF

**5. Symptoms on the vehicle when the DTC is set**

**<Symptoms on the vehicle due to backup control (fail safe) - Action arising from backup control>**

- –

**<Symptoms on the vehicle due to malfunction>**

- –

**6. Pre-inspection work**

- Check that the battery voltage is in the normal range.

**7. After-inspection work**

- Clear all past DTCs.
- Check that no DTC is detected after test drive.

**8. Estimated failure factors**

- Fusible Link, FUSE: Fusing, irregular contact, partial engagement
- Alternator failure (abnormal voltage or requires adjustment)
- Vehicle control ECU: Malfunction

## INSPECTION PROCEDURE: P0563

| 1 | Read the DTC [HINO DX II ] |
|---|---|

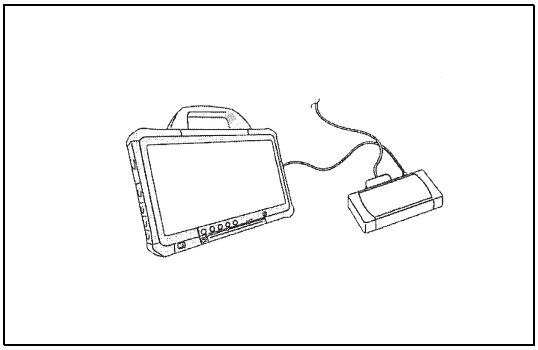

SAPH16F041000025

1. Set the starter switch to the "LOCK" position.
2. Connect the vehicle to HINO DX II .
3. Set the starter switch to the "ON" position.
4. Select [Engine ECU] and check if the DTC P0563 has been detected.

**Has DTC (P0563) been detected?**

**YES**

**Go to diagnosis procedure of DTCs in the engine ECU.**

**NO**

**Go to step 2.**

| 2 | Inspect the vehicle control ECU |
|---|---|

1. Perform "VEHICLE CONTROL ECU INSPECTION", ensure that there is no other abnormality.

**Was any failure found?**

**YES**

**Repair or replace the failure part.**
**Perform "After-inspection work" of INFORMATION section.**

**NO**

**Replace the vehicle control ECU.**
**Perform "After-inspection work" of INFORMATION section.**

# DTC: P0617

EN01H16F04100F03001011

## DTC: P0617 Starter switch battery short

INFORMATION

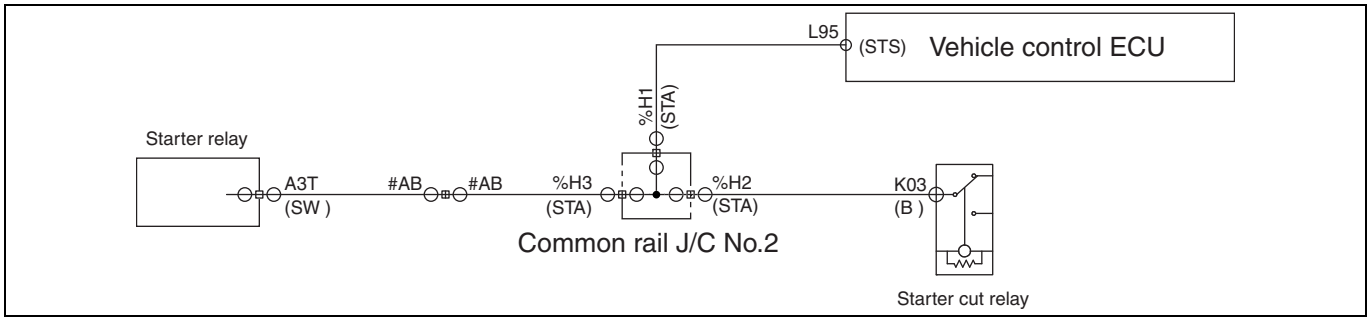


SAPH16F041000026

**1. Technical description**

- The vehicle control ECU evaluates the starting condition based on the starter signal.

**<Description of malfunction>**

- Detection of a high fixed value for the starter signal.

**2. DTC set condition**

(1) DTC detection condition
Starter switch ON. Battery voltage is in the range of 10 V to 16 V. Engine speed is 1,000 r/min or more.

(2) Judgement criteria
Starter signal (START) "ON" is detected with in the above DTC detection condition.

**3. Reset condition**

- After normal operation is restored and engine is restarted after engine stall.

**4. Indication, warning or system control regulation when the DTC is set.**

- SVS light: OFF

**5. Symptoms on the vehicle when the DTC is set**

**<Symptoms on the vehicle due to backup control (fail safe) - Action arising from backup control>**

- –

**<Symptoms on the vehicle due to malfunction>**

- –

**6. Pre-inspection work**

- Check that the battery voltage is in the normal range.

**7. After-inspection work**

- Clear all past DTCs.
- Check that no DTC is detected after test drive.

**8. Estimated failure factors**

- Malfunction of starter switch.
- Harness disconnection or short-circuit.
- Malfunction of vehicle control ECU.

## INSPECTION PROCEDURE: P0617

| 1 | Read the DTC [HINO DX II ] |
|---|---|

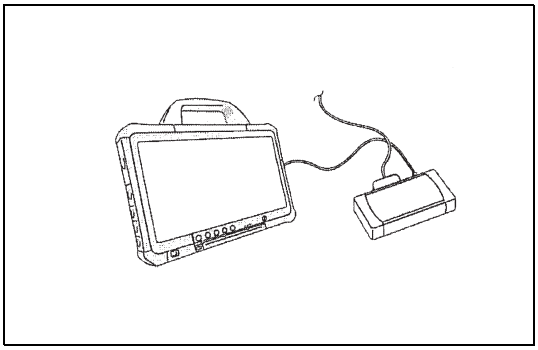

SAPH16F041000027

1. Set the starter switch to the "LOCK" position.
2. Connect the vehicle to HINO DX II .
3. Set the starter switch to the "ON" position.
4. Select [Engine] and check if the DTC (P0617) has been detected.

**Has DTC (P0617) been detected in the engine ECU?**

**YES**

**Go to diagnosis procedure of DTCs in the engine ECU.**

**NO**

**Go to step 2.**

| 2 | Inspect the vehicle control ECU |
|---|---|

1. Perform "VEHICLE CONTROL ECU INSPECTION", ensure that there is no other abnormality.

**Was any failure found?**

**YES**

**Repair or replace the failure part.**
**Perform "After-inspection work" of INFORMATION section.**

**NO**

**Go to step 3.**

## 3 Inspect for starter signal [HINO DX II ]

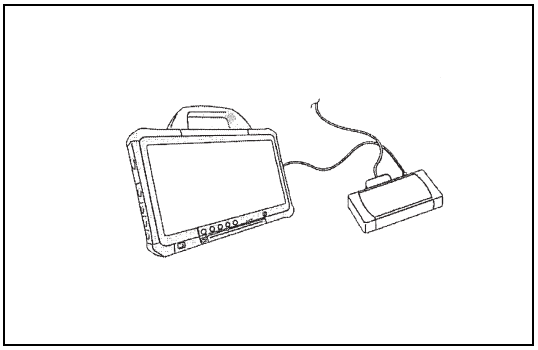

SAPH16F041000028

1. Set the starter switch to the "ON" position.
2. Select [Vehicle control ECU] on HINO DX II .
3. Select following items from the [Data monitor Setting] menu, and measure them.

| Measurement conditions | Monitoring items | Standard values |
|---|---|---|
| **Starter switch: LOCK/START** | **ST switch** | **Starter switch [LOCK]: OFF Starter switch [START]: ON** |

**Do the measurements meet the standard value?**

**YES**

**Procedure completed.**
**Perform "After-inspection work" of INFORMATION section.**

**NO**

**Go to step 4.**

## 4 Inspect the starter signal circuit

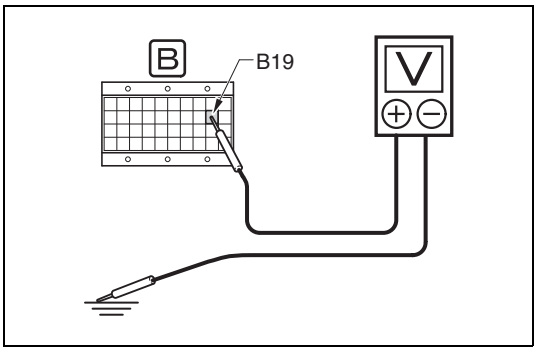


SAPH16F041000029

1. Set the starter switch to the "LOCK" position.
2. Connect the signal check harness to the vehicle-side connector of the vehicle control ECU. (Do not connect the harness to the ECU.)
3. Use the electrical tester to measure the voltage between the terminals of the vehicle control ECU (signal check harness) and the ground.

| Measurement conditions | Tester connections | Standard values |
|---|---|---|
| **Starter switch: LOCK/START** | **Vehicle control ECU (signal check harness) STS(B19) – Ground** | **Starter switch [LOCK]: 0 V Starter switch [START]: 9 V or more** |

**Do the measurements meet the standard value?**

**YES**

**Replace the vehicle control ECU**
**Perform "After-inspection work" of INFORMATION section.**

**NO**

**Repair or replace the starter signal circuit.**
**Perform "After-inspection work" of INFORMATION section.**

# DTC: P0704

EN01H16F04100F03001012

## DTC: P0704 Clutch switch malfunction

INFORMATION

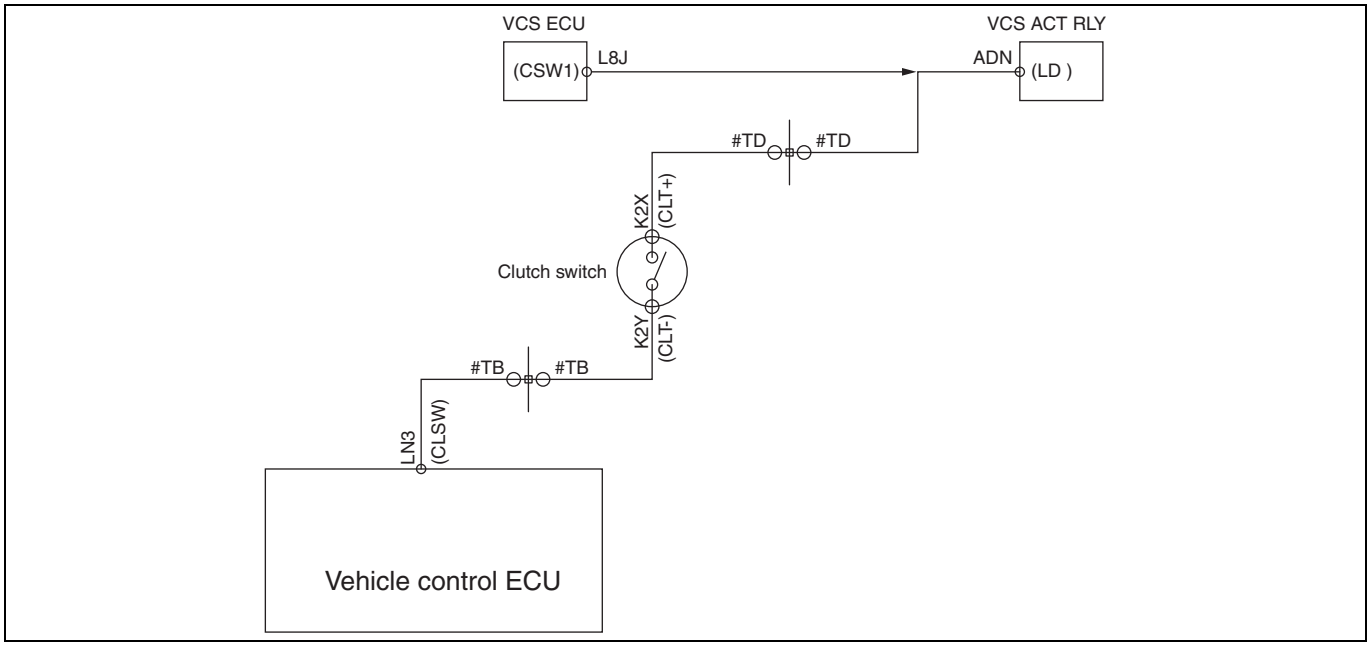


SAPH16F041000030

**1. Technical description**

- The vehicle control ECU recognizes clutch operation based on the clutch switch signal.

**<Description of malfunction>**

- The clutch switch cannot be correctly sensed.

**2. DTC set condition**

(1) Check conditions
Vehicle with manual transmission.

(2) Judgement criteria
This will be detected if presence or absence of input of clutch switch signals cannot be sensed after 5 or more cycles of vehicle stop (vehicle speed = 0 km/h {0 mph}) → 80 km/h {50 mph} (run) → stop.

**3. Reset condition**

- Immediately after normal operation is restored.

**4. Indication, warning or system control regulation when the DTC is set.**

- SVS light: OFF

**5. Symptoms on the vehicle when the DTC is set**

**<Symptoms on the vehicle due to backup control (fail safe) - Action arising from backup control>**

- –

**<Symptoms on the vehicle due to malfunction>**

- Economy run is not available.
- Exhaust brake is abnormal.
- Cruise control is abnormal.

**6. Pre-inspection work**

- Check that the battery voltage is in the normal range.

**7. After-inspection work**

- Clear all past DTCs.
- Check that no DTC is detected after test drive.

**8. Estimated failure factors**

- Improperly adjusted clutch switch (does not turn ON when pedal is released)
- Clutch switch OFF failure, circuit disconnection, faulty contact
- Malfunction of vehicle control ECU
- Irregular contact (disconnection or poor fit of connector)
- Harness disconnection or short-circuit

## INSPECTION PROCEDURE: P0704

| 1 | Inspect the vehicle control ECU |
|---|---|

1. Perform "VEHICLE CONTROL ECU INSPECTION", ensure that there is no other abnormality.

**Was any failure found?**

**YES**

**Repair or replace the failure part.**
**Perform "After-inspection work" of INFORMATION section.**

**NO**

**Go to step 2.**

| 2 | Inspect the clutch switch [HINO DX II ] |
|---|---|

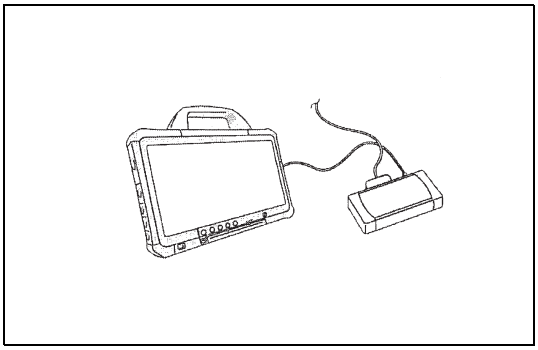

SAPH16F041000031

1. Set the starter switch to the "LOCK" position.
2. Connect the vehicle to HINO DX II .
3. Set the starter switch to the "ON" position.
4. Select [Vehicle control ECU] on HINO DX II .
5. Select following items from the [Data monitor Setting] menu, and measure them.

| Measurement conditions | Monitoring items | Standard values |
|---|---|---|
| Starter switch: ON | Clutch pedal switch | Depress the clutch pedal: OFF<br>Release the clutch pedal: ON |

**Do the measurements meet the standard value?**

**YES**

**Procedure completed.**
**Perform "After-inspection work" of INFORMATION section.**

**NO**

**Go to step 3.**

| 3 | Inspect the clutch switch signal circuit |
|---|---|

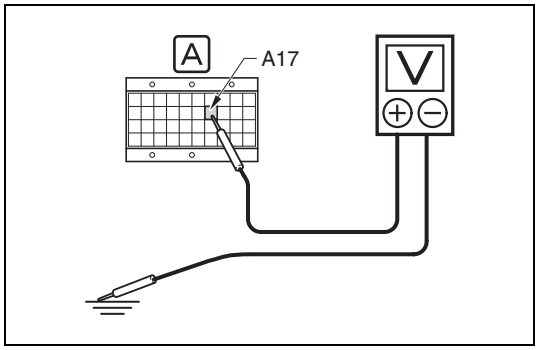


SAPH16F041000032

1. Set the starter switch to the "LOCK" position.
2. Connect the signal check harness to the vehicle-side connector of the vehicle control ECU. (Do not connect the harness to the ECU).
3. Set the starter switch to the "ON" position.
4. Use the electrical tester to measure the voltage between the terminals of the vehicle control ECU (signal check harness) and the ground.

| Measurement conditions | Tester connections | Standard values |
|---|---|---|
| Starter switch: ON | Vehicle control ECU (signal check harness) CLSW(A17) – Ground | Depress the clutch pedal: 0 V<br>Release the clutch pedal: 10 – 16 V |

**Do the measurements meet the standard value?**

**YES**

**Replace the vehicle control ECU**
**Perform "After-inspection work" of INFORMATION section.**

**NO**

**Go to step 4.**

| 4 | Inspect the clutch switch |
|---|---|

1. Check if the clutch switch is properly adjusted.

**Was any failure found?**

**YES**

**Adjust the clutch switch.**
**Perform "After-inspection work" of INFORMATION section.**

**NO**

**Go to step 5.**

| 5 | Inspect the clutch switch connector |
|---|---|

1. Check the connection of the clutch switch connector (Looseness and poor contact).

**Was any failure found?**

**YES**

**Connect securely, repair if needed.**
**Perform "After-inspection work" of INFORMATION section.**

**NO**

**Go to step 6.**

| 6 | Inspect the clutch switch unit |
|---|---|

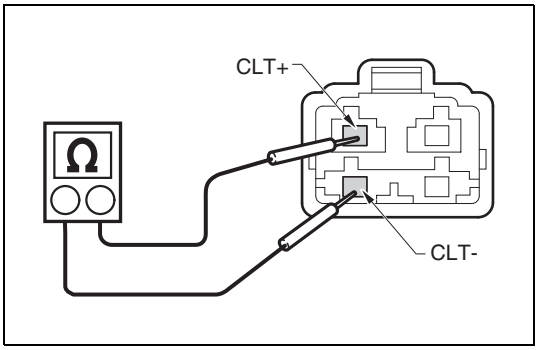


SAPH16F041000033

1. Set the starter switch to the "LOCK" position.
2. Disconnect the clutch switch connector.
3. Use the electrical tester to measure the resistance between the terminals of the clutch switch.

| Tester connections | Standard values |
|---|---|
| **Clutch switch**<br>**CLT+ – CLT-** | **With switch depressed (ON):**<br>**< 1 Ω**<br>**With switch released (OFF):**<br>**∞ Ω** |

**Do the measurements meet the standard value?**

**YES**

**Go to step 7.**

**NO**

**Replace the clutch switch.**
**Perform "After-inspection work" of INFORMATION section.**

| 7 | Inspect the power supply of the clutch switch |
|---|---|

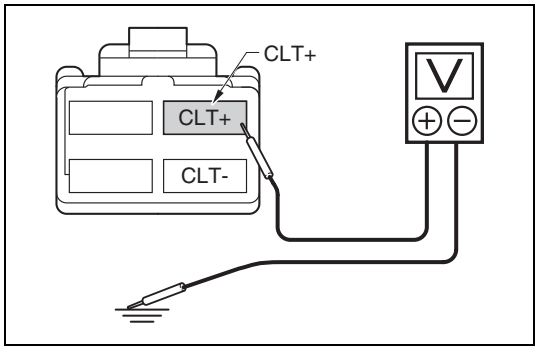


SAPH16F041000034

1. Set the starter switch to the "ON" position.
2. Use the electrical tester to measure the voltage between the CL2+ terminal in the clutch switch vehicle-side connector and the ground.

| Measurement conditions | Tester connections | Standard values |
|---|---|---|
| Starter switch: ON | Clutch switch vehicle-side connector<br>CL2+ – Ground | 10 – 16 V |

**Do the measurements meet the standard value?**

**YES**

**Repair or replace the wire harness between the clutch switch and the vehicle control ECU.**
**Perform "After-inspection work" of INFORMATION section.**

**NO**

**Repair or replace the power supply circuit of the clutch switch.**
**Perform "After-inspection work" of INFORMATION section.**

# DTC: P0850

EN01H16F04100F03001013

## DTC: P0850 Neutral switch malfunction

INFORMATION

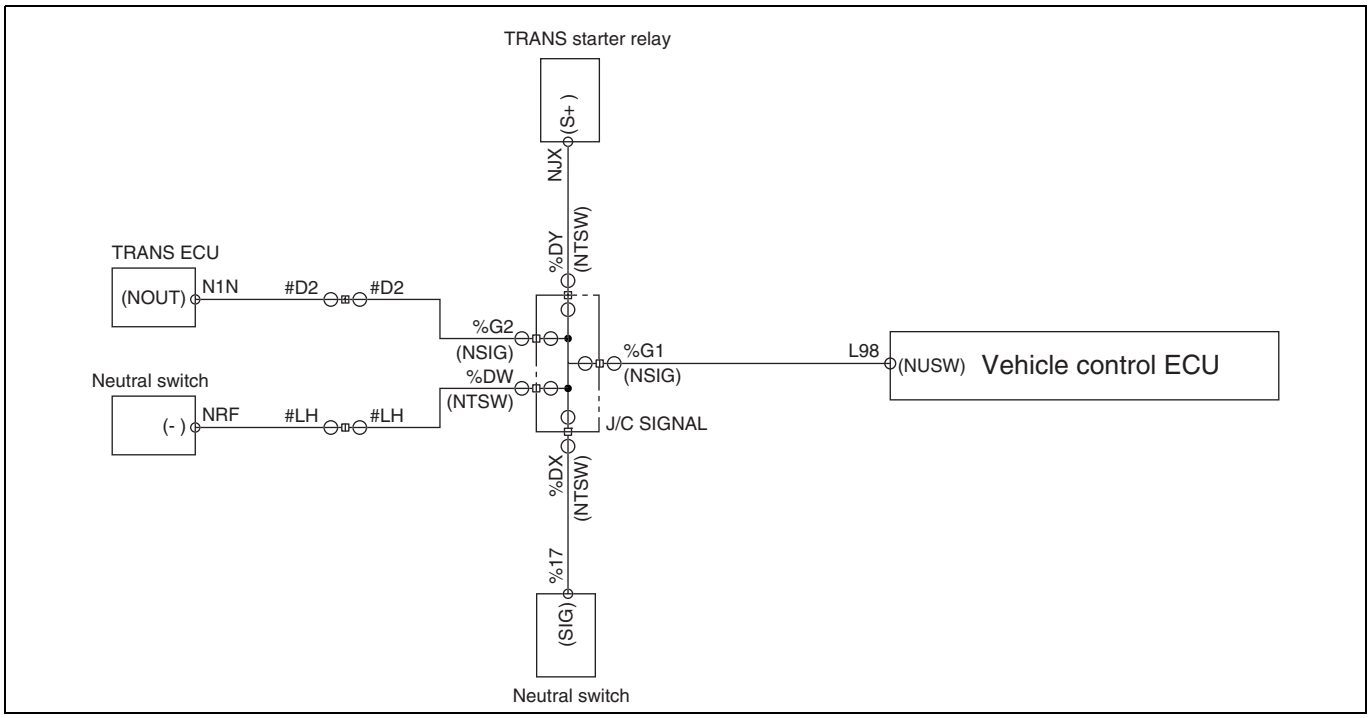


SAPH16F041000035

**1. Technical description**

- The vehicle control ECU recognizes the gear neutral position based on the neutral switch signal.

**<Description of malfunction>**

- The neutral switch signal cannot be recognized normally.

**2. DTC set condition**

(1) Check conditions
Vehicle with manual transmission.

(2) Judgement criteria
Even when the vehicle speed changes from 0 km/h {0 mph} (stop) → 80 km/h {50 mph} (drive) → 0 km/h {0 mph} (stop), there is no input change (ON/OFF) of the neutral switch signal.

**3. Reset condition**

- Immediately after normal operation is restored.

**4. Indication, warning or system control regulation when the DTC is set.**

- SVS light: OFF

**5. Symptoms on the vehicle when the DTC is set**

**<Symptoms on the vehicle due to backup control (fail safe) - Action arising from backup control>**

- –

**<Symptoms on the vehicle due to malfunction>**

- Economy run is abnormal.
- Exhaust brake is abnormal.
- Cruise control is abnormal.
- Engine speed control is abnormal.

**6. Pre-inspection work**

- Check that the battery voltage is in the normal range.

**7. After-inspection work**

- Clear all past DTCs.
- Check that no DTC is detected after test drive.

**8. Estimated failure factors**

- Malfunction of Neutral switch (sticking)
- Open circuit or short circuit of wire harness
- Malfunction of vehicle control ECU
- Irregular contact (disconnection or poor fit of connector)

## INSPECTION PROCEDURE: P0850

| 1 | Inspect the vehicle control ECU |
|---|---|

1. Perform "VEHICLE CONTROL ECU INSPECTION", ensure that there is no other abnormality.

**Was any failure found?**

**YES**

**Repair or replace the failure part.**
**Perform "After-inspection work" of INFORMATION section.**

**NO**

**Go to step 2.**

| 2 | Inspect the neutral switch [HINO DX II ] |
|---|---|

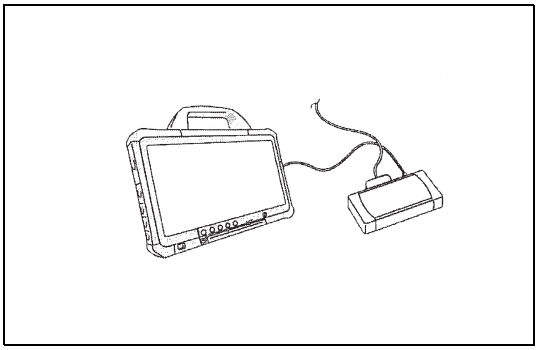

SAPH16F041000036

1. Set the starter switch to the "LOCK" position.
2. Connect the vehicle to HINO DX II .
3. Set the starter switch to the "ON" position.
4. Select [Vehicle control ECU] on HINO DX II .
5. Select following items from the [Data monitor Setting] menu, and measure them.

| Measurement conditions | Monitoring items | Standard values |
|---|---|---|
| Starter switch: ON | Neutral switch | Neutral: ON<br>Without neutral: OFF |

**Do the measurements meet the standard value?**

**YES**

**Procedure completed.**
**Perform "After-inspection work" of INFORMATION section.**

**NO**

**Go to step 3.**

| 3 | Inspect the neutral switch signal circuit |
|---|---|

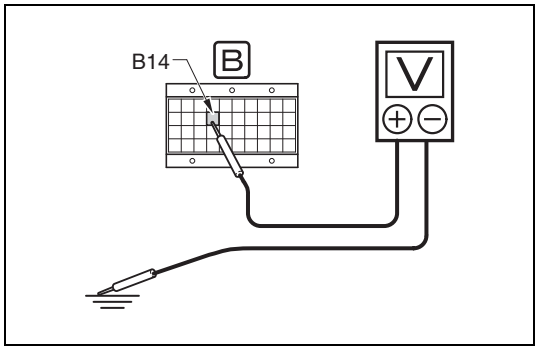

SAPH16F041000037

1. Set the starter switch to the "LOCK" position.
2. Connect the signal check harness to the vehicle-side connector of the vehicle control ECU. (Do not connect the harness to the ECU.)
3. Set the starter switch to the "ON" position.
4. Use the electrical tester to measure the voltage between the terminals of the vehicle control ECU (signal check harness) and the ground.

| Measurement conditions | Tester connections | Standard values |
|---|---|---|
| Starter switch: ON | Vehicle control ECU (signal check harness) NUSW(B14) – Ground | Neutral: 10 – 16 V<br>Without neutral: 0 V |

**Do the measurements meet the standard value?**

**YES**

**Replace the vehicle control ECU.**
**Perform "After-inspection work" of INFORMATION section.**

**NO**

**Go to step 4.**

| 4 | Inspect the neutral switch |
|---|---|

1. Check if the neutral switch is properly adjusted.

**Was any failure found?**

**YES**

**Adjust the neutral switch.**
**Perform "After-inspection work" of INFORMATION section.**

**NO**

**Go to step 5.**

| 5 | Inspect the neutral switch connector |
|---|---|

1. Check the connection of the neutral switch connector (Looseness and poor contact).

**Was any failure found?**

**YES**

**Connect securely, repair if needed.**
**Perform "After-inspection work" of INFORMATION section.**

**NO**

**Go to step 6.**

| 6 | Inspect the neutral switch unit |
|---|---|

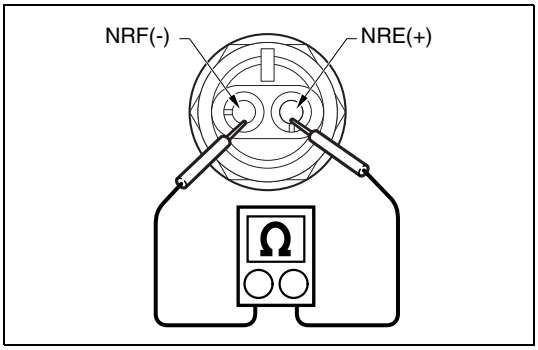

SAPH16F041000038

1. Set the starter switch to the "LOCK" position.
2. Disconnect the neutral switch connector.
3. Use the electrical tester to measure the resistance between the terminals of the neutral switch.

| Measurement conditions | Tester connections | Standard values |
|---|---|---|
| Starter switch: LOCK | Neutral switch NRE – NRF | Neutral: < 1 Ω<br>Without neutral: ∞ Ω |

**Do the measurements meet the standard value?**

**YES**

**Go to step 7.**

**NO**

**Replace the neutral switch.**
**Perform "After-inspection work" of INFORMATION section.**

| 7 | Inspect the neutral switch power supply |
|---|---|

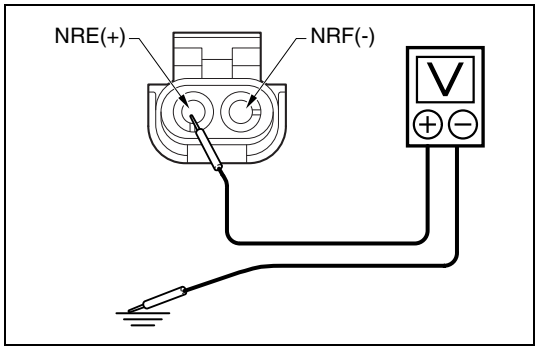


SAPH16F041000039

1. Set the starter switch to the "ON" position.
2. Use the electrical tester to measure the voltage between the NRE terminal in the neutral switch vehicle-side connector and the ground.

| Measurement conditions | Tester connections | Standard values |
|---|---|---|
| **Starter switch: ON** | **Neutral switch vehicle-side connector<br>NRE – Ground** | **10 – 16 V** |

**Do the measurements meet the standard value?**

**YES**

**Repair or replace the wire harness between the neutral switch and the vehicle control ECU.**
**Perform "After-inspection work" of INFORMATION section.**

**NO**

**Repair or replace the power supply circuit of the neutral switch.**
**Perform "After-inspection work" of INFORMATION section.**

# DTC: P1565

EN01H16F04100F03001014

## DTC: P1565 Cruise switch malfunction

INFORMATION

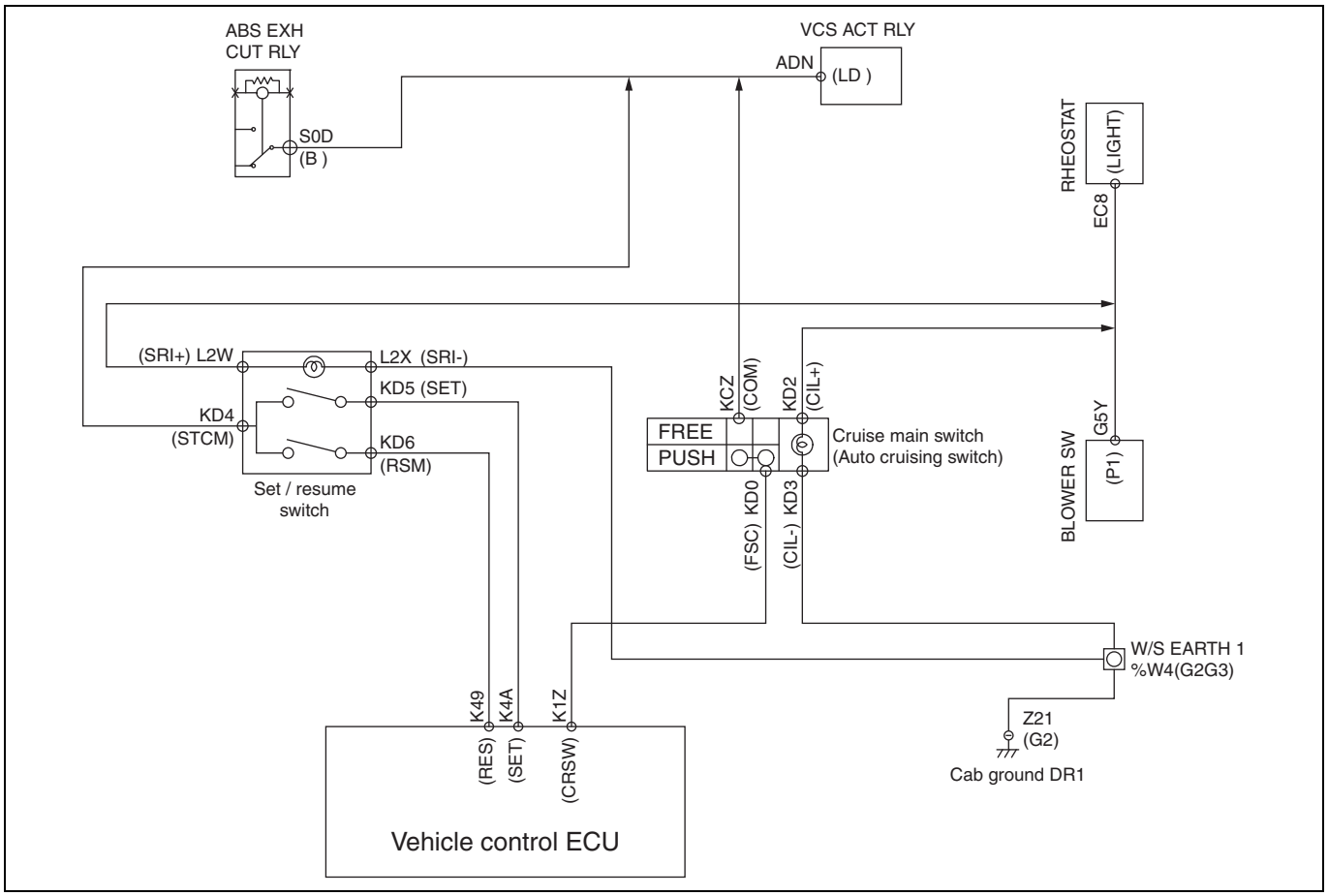


SAPH16F041000040

**1. Technical description**

- The vehicle control ECU recognizes auto cruise operation, based on the cruise main switch signal and the Set/Resume switch signal.

**<Description of malfunction>**

- Malfunction of the Set/Resume switch (Sticking in the "ON" position) is detected.

**2. DTC set condition**

(1) Check conditions
Starter switch ON.

(2) Judgement criteria
ON status (switch operated) of the Set/Resume switch has been recognized when the starter is running.

**3. Reset condition**

- After the engine stops, the OFF status (switch not operated) of the Set/Resume switch is recognized when performing an engine restart.

**4. Indication, warning or system control regulation when the DTC is set.**

- SVS light: OFF

**5. Symptoms on the vehicle when the DTC is set**

**<Symptoms on the vehicle due to backup control (fail safe) - Action arising from backup control>**

- –

**<Symptoms on the vehicle due to malfunction>**

- Cruise control is not available.

**6. Pre-inspection work**

- Check that the battery voltage is in the normal range.

**7. After-inspection work**

- Clear all past DTCs.
- Check that no DTC is detected after test drive.

**8. Estimated failure factors**

- Malfunction of Set/Resume switch.
- Harness disconnection or short-circuit.
- Malfunction of ECU.
- Irregular contact (disconnection or poor fit of connector).

## INSPECTION PROCEDURE: P1565

| 1 | Inspect the vehicle control ECU |
|---|---|

1. Perform "VEHICLE CONTROL ECU INSPECTION", ensure that there is no other abnormality.

**Was any failure found?**

**YES**

**Repair or replace the failure part.**
**Perform "After-inspection work" of INFORMATION section.**

**NO**

**Go to step 2.**

| 2 | Inspect the set/resume switch 1 [HINO DX II ] |
|---|---|

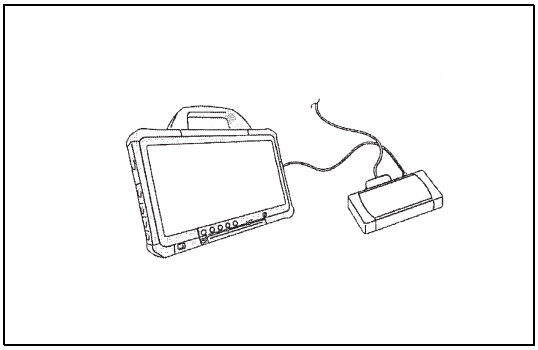

SAPH16F041000041

1. Set the starter switch to the "LOCK" position.
2. Connect the vehicle to HINO DX II .
3. Set the starter switch to the "ON" position.
4. Select [Vehicle control ECU] on HINO DX II .
5. Select following items from the [Data monitor Setting] menu, and measure them.

| Measurement conditions | Monitoring items | Standard values |
|---|---|---|
| Starter switch: ON | Cruise control switch 1 | Set position: ON<br>Free position: OFF |

**Do the measurements meet the standard value?**

**YES**

**Go to step 3.**

**NO**

**Go to step 4.**

## 3 Inspect the set/resume switch 2 [HINO DX II ]

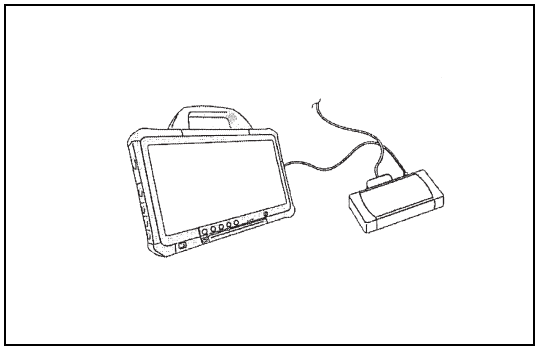

SAPH16F041000042

1. Select following items from the [Data monitor Setting] menu, and measure them.

| Measurement conditions | Monitoring items | Standard values |
|---|---|---|
| Starter switch: ON | Cruise control switch 2 | Resume position: ON<br>Free position: OFF |

**Do the measurements meet the standard value?**

**YES**

**Procedure completed.**
**Perform "After-inspection work" of INFORMATION section.**

**NO**

**Go to step 4.**

## 4 Inspect the set/resume switch signal circuit

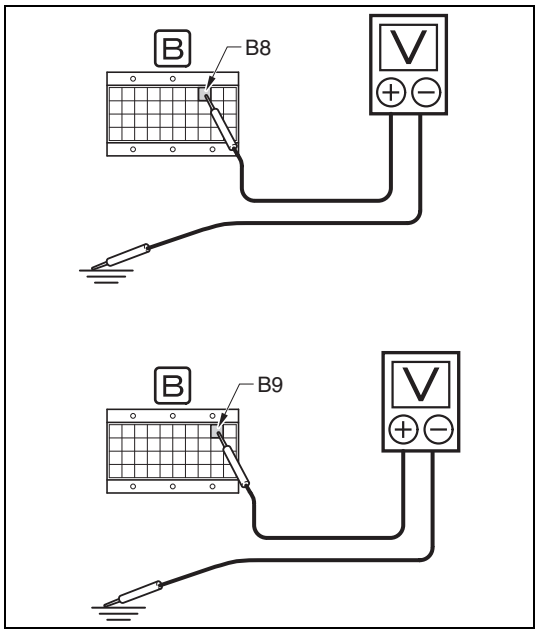


SAPH16F041000043

1. Set the starter switch to the "LOCK" position.
2. Connect the signal check harness to the vehicle-side connector of the vehicle control ECU. (Do not connect the harness to the ECU.)
3. Set the starter switch to the "ON" position.
4. Use the electrical tester to measure the voltage between the terminals of the vehicle control ECU (signal check harness) and the ground.

| Measurement conditions | Tester connections | Standard values |
|---|---|---|
| Starter switch: ON | Vehicle control ECU (signal check harness)<br>SET(B8) – Ground<br>RES(B9) – Ground | Set switch<br>Resume switch<br>- ON: 10 – 16 V<br>- OFF: 0 V |

**Do the measurements meet the standard value?**

**YES**

**Replace the vehicle control ECU.**
**Perform "After-inspection work" of INFORMATION section.**

**NO**

**Go to step 5.**

| 5 | Inspect the set/resume switch connector |
|---|---|

1. Check the connection of the set/resume switch connector (Looseness and poor contact).

**Was any failure found?**

**YES**

**Connect securely, repair if needed.**
**Perform "After-inspection work" of INFORMATION section.**

**NO**

**Go to step 6.**

| 6 | Inspect the set/resume switch unit |
|---|---|

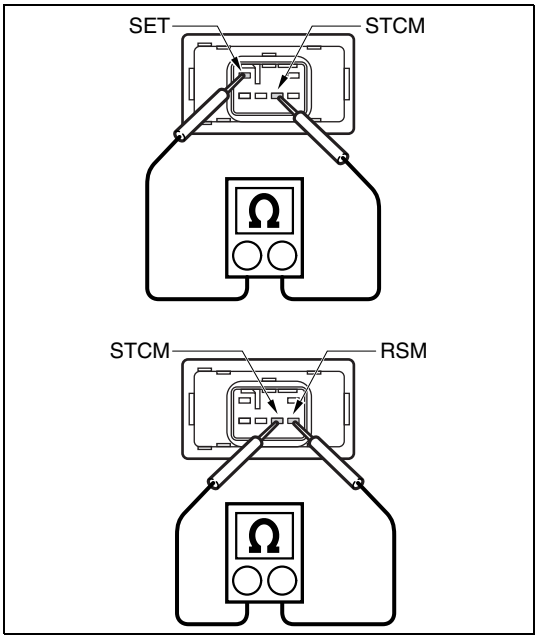


SAPH16F041000044

1. Set the starter switch to the "LOCK" position.
2. Disconnect the set/resume switch connector.
3. Use the electrical tester to measure the resistance between the terminals of the set/resume switch.

| Tester connections | Standard values |
|---|---|
| **Set/resume switch**<br>**STCM – SET**<br>**STCM – RSM** | **Set switch**<br>**Resume switch**<br>**- ON: < 1 Ω**<br>**- OFF: ∞ Ω** |

**Do the measurements meet the standard value?**

**YES**

**Go to step 7.**

**NO**

**Replace the set/resume switch.**
**Perform "After-inspection work" of INFORMATION section.**

| 7 | Inspect the power supply of the set/resume switch |
|---|---|

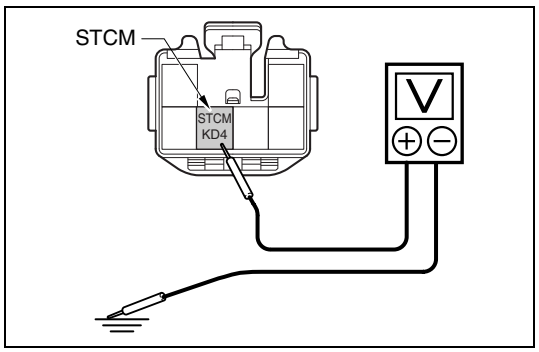


SAPH16F041000045

1. Set the starter switch to the "ON" position.
2. Use the electrical tester to measure the voltage between the STCM terminal in the set/resume switch vehicle-side connector and the ground.

| Measurement conditions | Tester connections | Standard values |
|---|---|---|
| **Starter switch: ON** | **Set/resume switch vehicle-side connector STCM – Ground** | **10 – 16 V** |

**Do the measurements meet the standard value?**

**YES**

**Repair or replace the wire harness between the set/resume switch and the vehicle control ECU.**
**Perform "After-inspection work" of INFORMATION section.**

**NO**

**Repair or replace the power supply circuit of the set/resume switch.**
**Perform "After-inspection work" of INFORMATION section.**

# DTC: U0101

EN01H16F04100F03001015

## DTC: U0101 Disconnection of bus line between Automatic transmission controller and vehicle control

INFORMATION

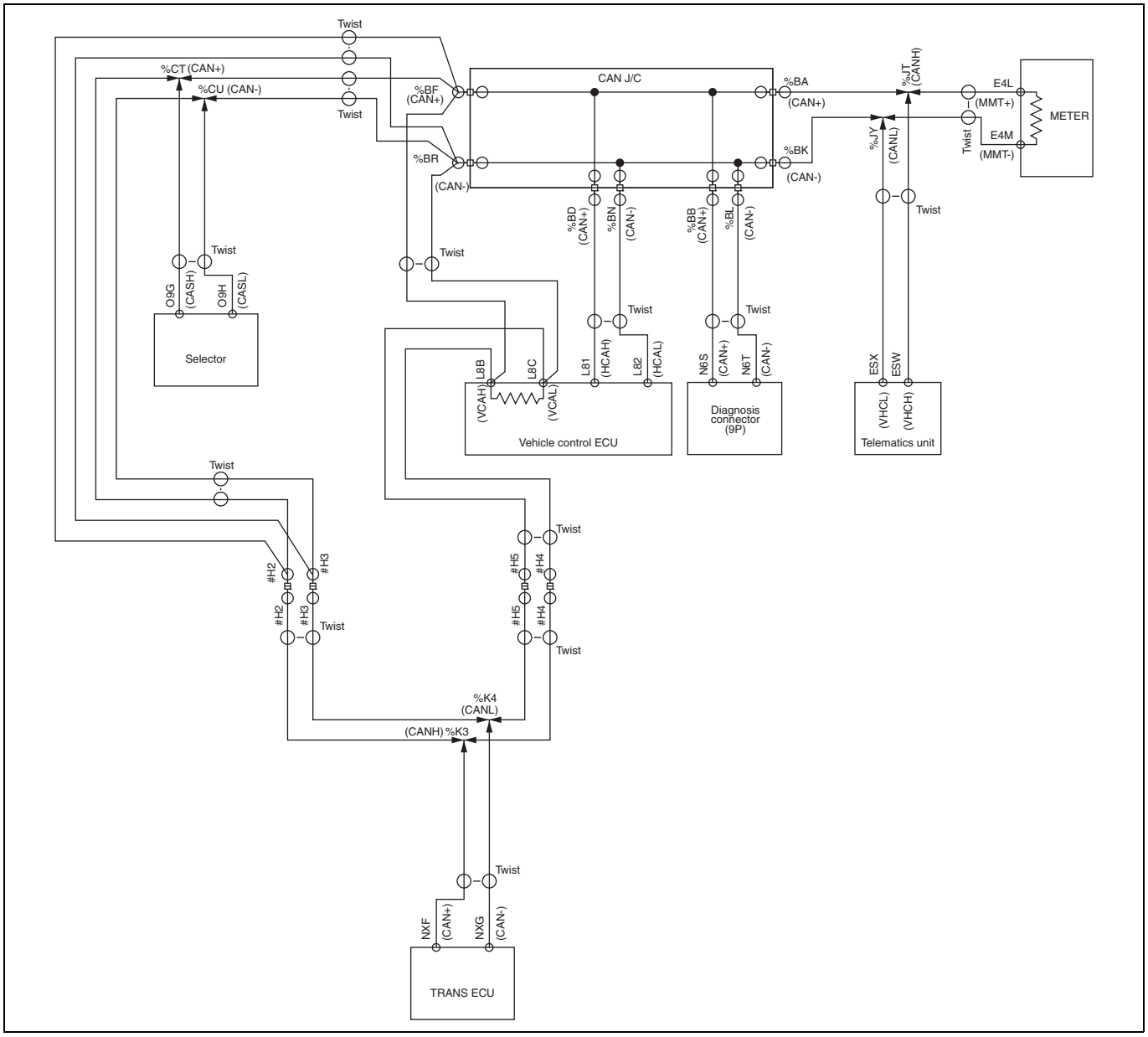


SAPH16F041000046

### 1. Technical description

- –

**<Description of malfunction>**

- The vehicle control ECU detected interruption of CAN communication with the TRANS-ECU.

### 2. DTC set condition

(1) DTC detection condition
Starter switch ON.
Vehicle control ECU power supply voltage is in the range of 10 V to 16 V.

(2) Judgement criteria
CAN data from the TRANS-ECU to the vehicle control ECU is interrupted.

**3. Reset condition**

- After restoration to normal condition.

**4. Indication, warning or system control regulation when the DTC is set.**

- SVS light: OFF

**5. Symptoms on the vehicle when the DTC is set**

**<Symptoms on the vehicle due to backup control (fail safe) - Action arising from backup control>**

- –

**<Symptoms on the vehicle due to malfunction>**

- –

**6. Pre-inspection work**

- Check that the battery voltage is in the normal range.

**7. After-inspection work**

- Clear all past DTCs.
- Check that no DTC is detected after test drive.

**8. Estimated failure factors**

- CAN circuit failure
- TRANS-ECU failure
- Harness disconnection or short-circuit

## INSPECTION PROCEDURE: U0101

Refer to the "CONTROL CAN COMMUNICATION LINE" in the chapter "CAN COMMUNICATION".

# DTC: U0105

EN01H16F04100F03001016

## DTC: U0105 Blackout in the engine CAN

INFORMATION

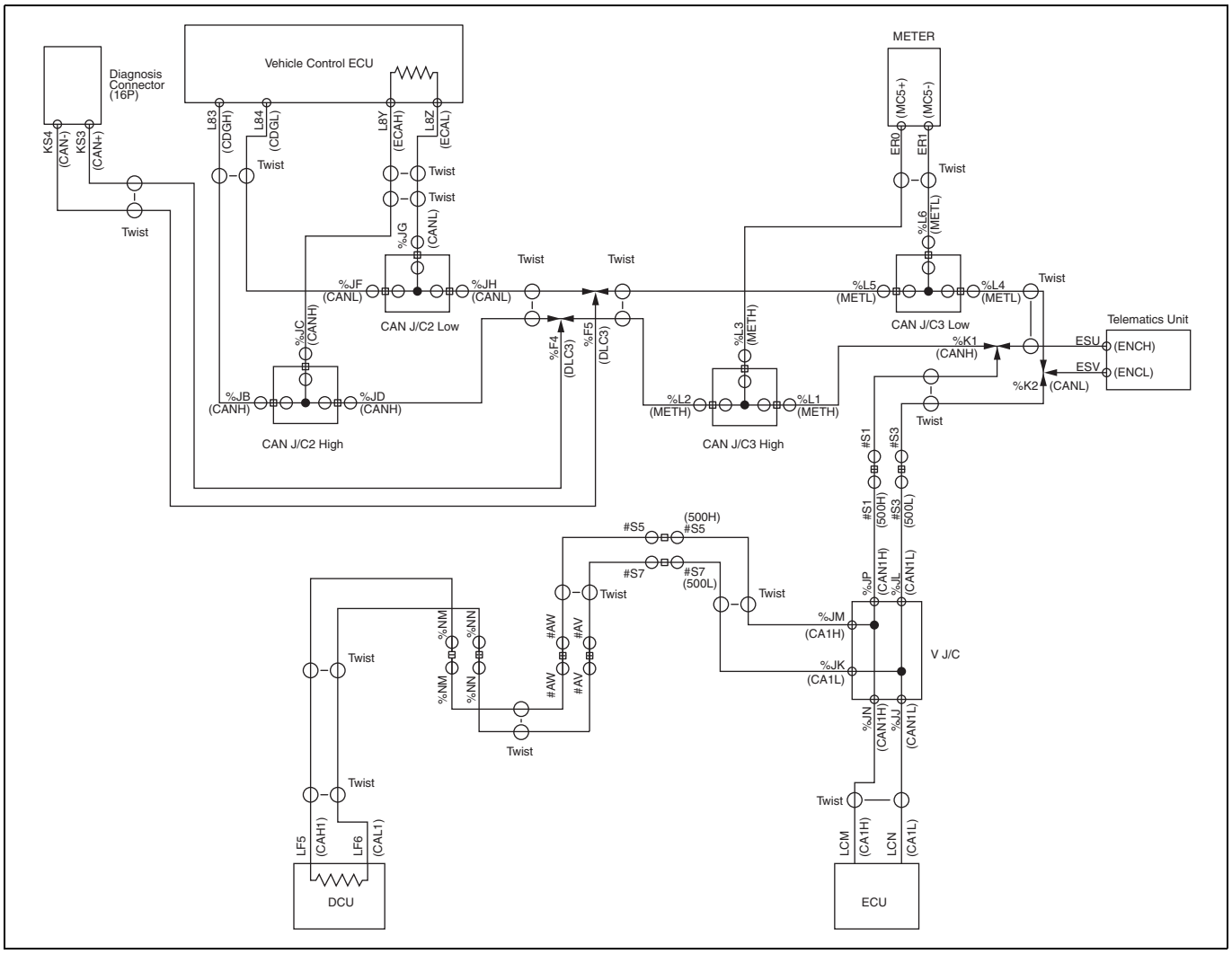


SAPH16F041000047

### 1. Technical description

- –

**<Description of malfunction>**

- The vehicle control ECU detected interruption of CAN communication with the engine ECU.

### 2. DTC set condition

(1) DTC detection condition
Starter switch ON.
Vehicle control ECU power supply voltage is in the range of 10 V to 16 V.

(2) Judgement criteria
CAN data from the engine ECU to the vehicle control ECU is interrupted.

### 3. Reset condition

- After restoration to normal condition.

### 4. Indication, warning or system control regulation when the DTC is set.

- SVS light: OFF

**5. Symptoms on the vehicle when the DTC is set**

**<Symptoms on the vehicle due to backup control (fail safe) - Action arising from backup control>**

- –

**<Symptoms on the vehicle due to malfunction>**

- –

**6. Pre-inspection work**

- Check that the battery voltage is in the normal range.

**7. After-inspection work**

- Clear all past DTCs.
- Check that no DTC is detected after test drive.

**8. Estimated failure factors**

- CAN circuit failure (Engine / diagnosis CAN)
- Vehicle control ECU failure
- Harness disconnection or short-circuit

## INSPECTION PROCEDURE: U0105

Refer to the "DIAGNOSIS CAN COMMUNICATION LINE" in the chapter "CAN COMMUNICATION".

# DTC: U0155

EN01H16F04100F03001017

## DTC: U0155 Disconnection of bus line between meter and vehicle control

INFORMATION

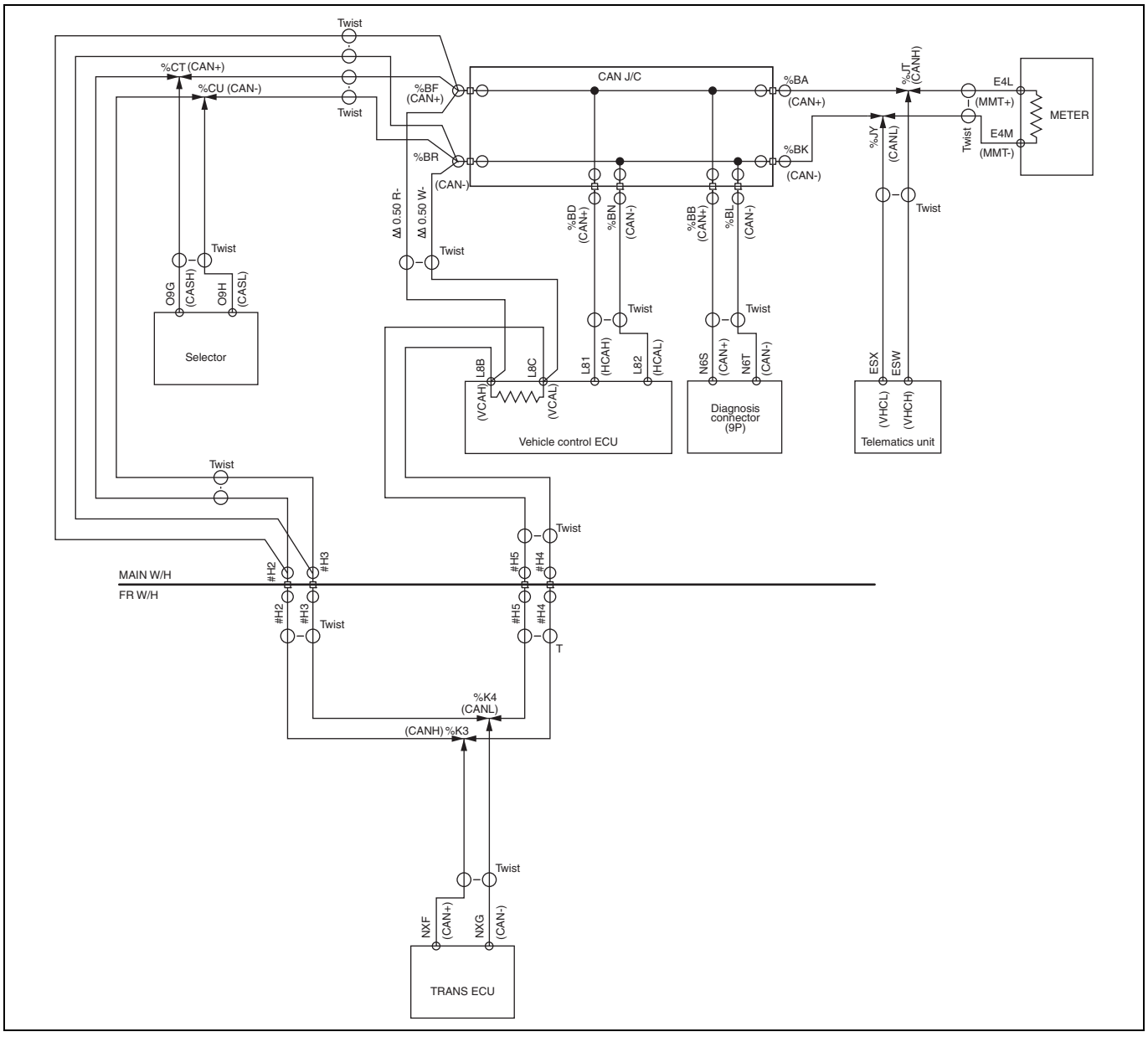


SAPH16F041000048

### 1. Technical description

- –

**<Description of malfunction>**

- The vehicle control ECU detected interruption of CAN communication with the combination meter.

### 2. DTC set condition

(1) DTC detection condition
Starter switch ON.
Vehicle control ECU power supply voltage is in the range of 10 V to 16 V.

(2) Judgement criteria
CAN data (ID) from the combination meter to the vehicle control ECU is interrupted.

**3. Reset condition**

- After restoration to normal condition.

**4. Indication, warning or system control regulation when the DTC is set.**

- SVS light: OFF

**5. Symptoms on the vehicle when the DTC is set**

**<Symptoms on the vehicle due to backup control (fail safe) - Action arising from backup control>**

- –

**<Symptoms on the vehicle due to malfunction>**

- –

**6. Pre-inspection work**

- Check that the battery voltage is in the normal range.

**7. After-inspection work**

- Clear all past DTCs.
- Check that no DTC is detected after test drive.

**8. Estimated failure factors**

- CAN circuit failure
- Combination meter failure
- Harness disconnection or short-circuit

# NO ACTIVATION OF AUXILIARY BRAKE

EN01H16F04100F03001018

## INSPECTION PROCEDURE

| 1 | Inspect the vehicle control ECU |
|---|---|

1. Perform "VEHICLE CONTROL ECU INSPECTION", ensure that there is no other abnormality.

**Was any failure found?**

**YES**

**Repair or replace the failure part.**
**Perform After-inspection work. (Clear all past DTC. Check no DTC is stored after test drive.)**

**NO**

**Go to step 2.**

| 2 | Read the DTC [HINO DX II ] |
|---|---|

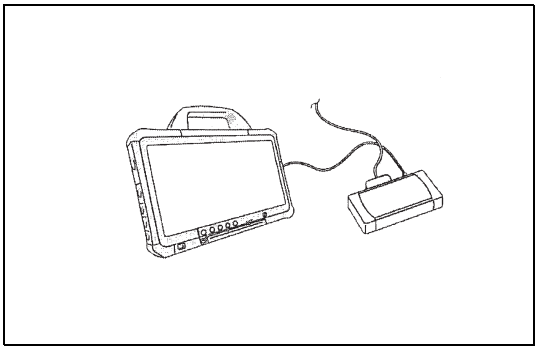

SAPH16F041000049

1. Set the starter switch to the "LOCK" position.
2. Connect the vehicle to HINO DX II .
3. Set the starter switch to the "ON" position.
4. Select [Vehicle control ECU] and check if any of the DTCs have been detected.

**Has DTC been detected?**

**YES**

**Go to diagnosis procedure of a related DTC.**

**NO**

**Go to step 3.**

| 3 | Inspect the exhaust brake switch (Wiper and retarder switch) [HINO DX ll ] |
|---|---|

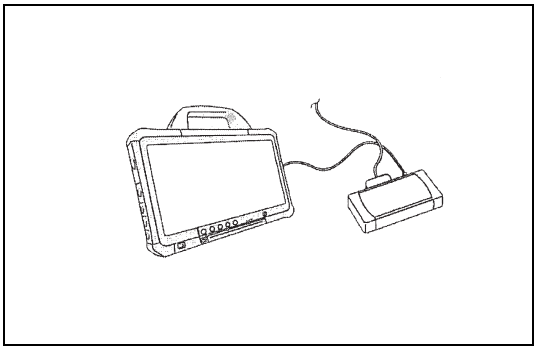

SAPH16F041000050

1. Select [Vehicle control ECU] on HINO DX II .
2. Select following items from the [Data monitor Setting] menu, and measure them.

| Measurement conditions | Tester connections | Standard values |
|---|---|---|
| Starter switch: ON<br>Exhaust brake switch: ON | Exhaust brake switch | ON |

**Do the measurements meet the standard value?**

**YES**

**Go to step 10.**

**NO**

**Go to step 4.**

| 4 | Inspect the exhaust brake switch (Wiper and retarder switch) signal circuit 1 |
|---|---|

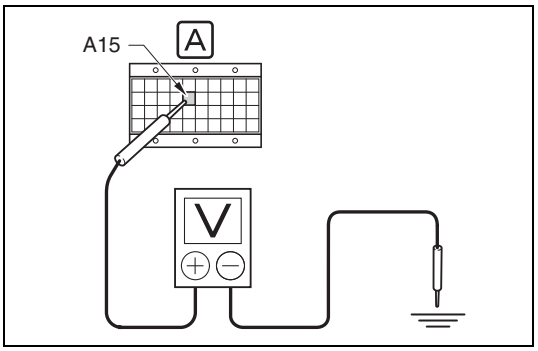


SAPH16F041000051

1. Set the starter switch to the "LOCK" position.
2. Connect the signal check harness to the vehicle-side connector of the vehicle control ECU. (Do not connect the harness to the ECU).
3. Set the starter switch to the "ON" position.
4. Use the electrical tester to measure the voltage between the terminals of the vehicle control ECU (signal check harness) and the ground

| Measurement conditions | Tester connections | Standard values |
|---|---|---|
| Starter switch: ON | Vehicle control ECU (signal check harness) CSW1(A15) – Ground | Exhaust brake switch<br>- ON: 10 – 16 V<br>- OFF: 0 V |

**Do the measurements meet the standard value?**

**YES**

**Replace the vehicle control ECU.**
**Perform After-inspection work. (Clear all past DTC. Check no DTC is stored after test drive.)**

**NO**

**Go to step 5.**

| 5 | Inspect the exhaust brake switch (wiper and retarder switch) signal circuit 2 |
|---|---|

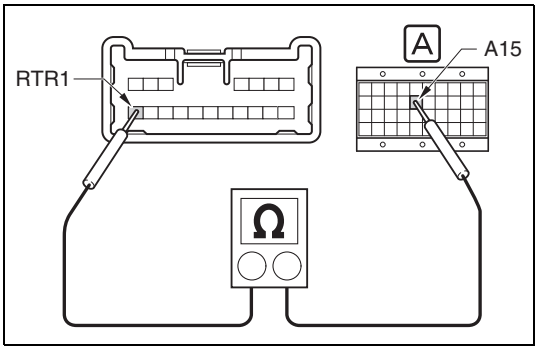

SAPH16F041000052

1. Set the starter switch to the "LOCK" position.
2. Disconnect the brake switch (wiper and retarder switch) connector.
3. Use the electrical tester to measure the resistance between the terminals of the vehicle control ECU (signal check harness) and the exhaust brake switch vehicle-side connector.

| Measurement conditions | Tester connections | Standard values |
|---|---|---|
| Starter switch: ON | Vehicle control ECU (signal check harness) – Exhaust brake vehicle-side connector CSW (A15) – RTR1 | Less than 1 Ω |

**Do the measurements meet the standard value?**

**YES**

**Go to step 6.**

**NO**

**Repair or replace the wire harness between the exhaust brake switch and the vehicle control ECU.**
**Perform After-inspection work. (Clear all past DTC. Check no DTC is stored after test drive.)**

| 6 | Inspect the exhaust brake switch (wiper and retarder switch) connector |
|---|---|

1. Check the connection of the brake switch connector (Looseness and poor contact).

**Was any failure found?**

**YES**

**Connect securely, repair if needed.**
**Perform After-inspection work. (Clear all past DTC. Check no DTC is stored after test drive.)**

**NO**

**Go to step 7.**

## 7 Inspect the exhaust brake switch (Wiper and retarder switch) unit

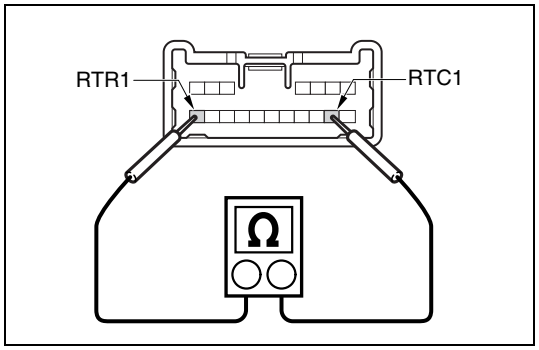


SAPH16F041000053

1. Disconnect the exhaust brake switch (Wiper and retarder switch) connector.
2. Use the electrical tester to measure the resistance between the terminals of the exhaust brake switch (Wiper and retarder switch) unit side.

| Tester connections | Standard values |
|---|---|
| **Exhaust brake switch RTC1 – RTR1** | **Exhaust brake switch**<br>**- ON: Less than 1 Ω**<br>**- OFF: ∞ Ω** |

**Do the measurements meet the standard value?**

**YES**

**Go to step 8.**

**NO**

**Replace the exhaust brake switch (Wiper and retarder switch).**
**Perform After-inspection work. (Clear all past DTC. Check no DTC is stored after test drive.)**

## 8 Inspect the exhaust brake switch (Wiper and retarder switch) power supply circuit 1

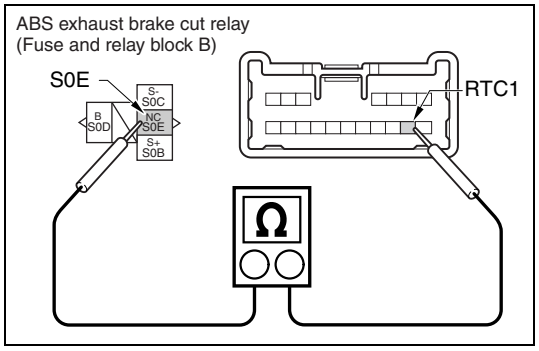


SAPH16F041000054

1. Disconnect the ABS exhaust brake cut relay.
2. Use the electrical tester to measure the resistance between the terminals of the exhaust brake switch (Wiper and retarder switch) unit side and the ABS exhaust brake cut relay connector.

| Tester connections | Standard values |
|---|---|
| **Exhaust brake switch vehicle -side connector – ABS exhaust brake cut relay connector RTC1 – SOE** | **Less than 1 Ω** |

**Do the measurements meet the standard value?**

**YES**

**Go to step 9.**

**NO**

**Repair or replace the wire harness between the exhaust brake switch and the ABS exhaust brake cut relay.**
**Perform After-inspection work. (Clear all past DTC. Check no DTC is stored after test drive.)**

| 9 | Inspect the brake switch (wiper and retarder switch) power supply circuit 2 |
|---|---|

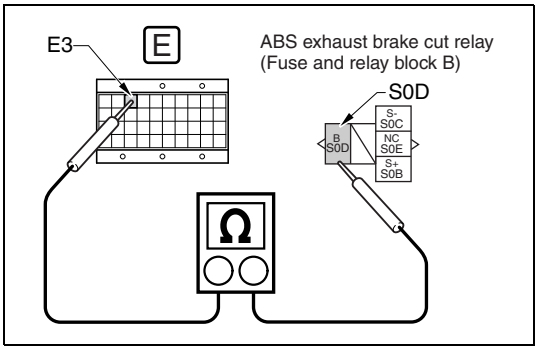


SAPH16F041000055

1. Use the electrical tester to measure the resistance between the terminal S0D of the ABS exhaust brake cut relay connector and the vehicle control ECU (signal check harness).

| Tester connections | Standard values |
|---|---|
| **ABS exhaust brake cut relay connector – Vehicle control ECU (signal check harness) S0D – AP1 (E3)** | **Less than 1 Ω** |

**Do the measurements meet the standard value?**

**YES**

**Replace the ABS exhaust brake cut relay.**
**Perform After-inspection work. (Clear all past DTC. Check no DTC is stored after test drive.)**

**NO**

- **Check the fuse VCS_ACT2 (Fusing and irregular contact).**
- **Repair or replace the wire harness between the ABS exhaust brake cut relay and the terminal AP1 of the vehicle control ECU.**

**Perform After-inspection work. (Clear all past DTC. Check no DTC is stored after test drive.)**

| 10 | CHECK THE AUXILIARY BRAKE ACTIVATION CONDITION. |
|---|---|

1. Check whether under condition of the auxiliary brake activation.

- Engine retarder activation conditions (Under all of the conditions 1 to 9.)
- One of the requests listed below:
  - Driver's request for engine retarder (1st or 2nd lever position)
  - Engine retardation by auxiliary brake interlock function
  - Engine retardation by cruise interlock
  - Engine retardation by external request
- No engine stall
- P.T.O. inactive
- Engine retarder setting selected
- Engine speed predetermined for engine retarder activation (850 r/min or more)
- Water temperature predetermined for engine retarder activation (40 °C {104 °F} or more)
- Injection flow predetermined for engine retarder activation
- No cut in engine retarder (clutch pedal not depressed; accelerator opening of 0%; ABS not activated)
- No auxiliary brake control stop
- Exhaust braking is requested when a vehicle stops.

**Was any failure found?**

**YES**

**Repair or replace the failure part.**
**Perform After-inspection work. (Clear all past DTC. Check no DTC is stored after test drive.)**

**NO**

**Procedure completed.**
**Perform After-inspection work. (Clear all past DTC. Check no DTC is stored after test drive.)**

# NO ACTIVATION/RELEASE OF ENGINE REVOLUTION CONTROL

EN01H16F04100F03001019

## INSPECTION PROCEDURE

| 1 | Inspect the vehicle control ECU |
|---|---|

1. Perform "VEHICLE CONTROL ECU INSPECTION", ensure that there is no other abnormality.

**Was any failure found?**

| YES | NO |
|---|---|
| **Repair or replace the failure part. Perform After-inspection work. (Clear all past DTC. Check no DTC is stored after test drive.)** | **Go to step 2.** |

| 2 | Read the DTC [HINO DX II ] |
|---|---|

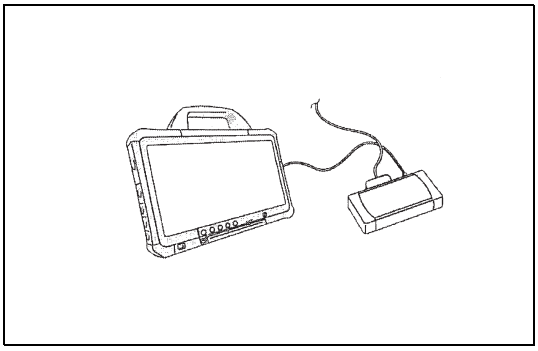

SAPH16F041000056

1. Set the starter switch to the "LOCK" position.
2. Connect the vehicle to HINO DX II .
3. Set the starter switch to the "ON" position.
4. Select [Vehicle control ECU] and check if any DTC has been detected.

**Has any DTC been detected in the vehicle control ECU?**

| YES | NO |
|---|---|
| **Go to diagnosis procedure of a related DTC.** | **Go to step 3.** |

## 3 Inspect the brake switch [HINO DX II ]

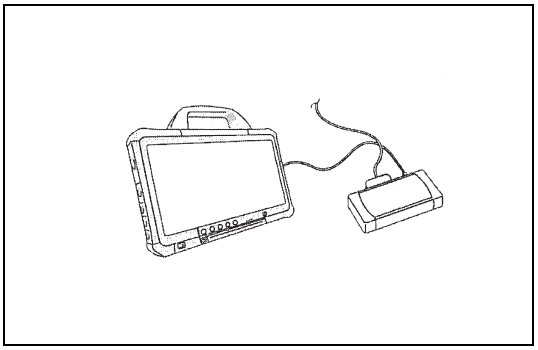

SAPH16F041000057

1. Set the starter switch to the "ON" position.
2. Select [Vehicle control ECU] on HINO DX II .
3. Select following items from the [Data monitor Setting] menu, and measure them.

| Measurement conditions | Monitoring items | Standard values |
|---|---|---|
| **Starter switch: ON** | **Brake switch** | **Depress the brake pedal: ON<br>Release the brake pedal: OFF** |

**Do the measurements meet the standard value?**

**YES**

**Procedure completed.**
**Perform After-inspection work. (Clear all past DTC. Check no DTC is stored after test drive.)**

**NO**

**Go to step 4.**

## 4 Inspect the brake switch signal circuit

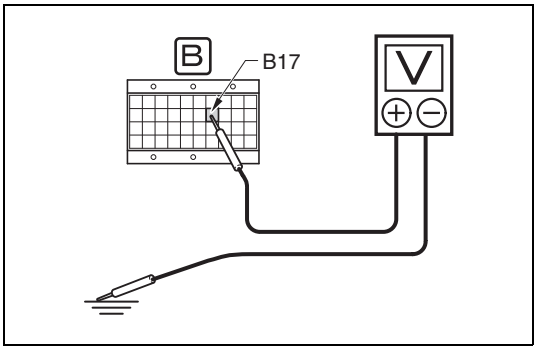


SAPH16F041000058

1. Set the starter switch to the "LOCK" position.
2. Connect the signal check harness to the vehicle-side connector of the vehicle control ECU. (Do not connect the harness to the ECU).
3. Set the starter switch to the "ON" position.
4. Use the electrical tester to measure the voltage between the terminals of the vehicle control ECU (signal check harness) and the ground.

| Measurement conditions | Tester connections | Standard values |
|---|---|---|
| **Starter switch: ON** | **Vehicle control ECU (signal check harness) TBSW(B17) – Ground** | **Depress the brake pedal: 0 V<br>Release the brake pedal: 10 – 16 V** |

**Do the measurements meet the standard value?**

| YES | NO |
|---|---|
| **Replace the vehicle control ECU. Perform After-inspection work. (Clear all past DTC. Check no DTC is stored after test drive.)** | **Go to step 5.** |

| 5 | Inspect the brake switch connector |
|---|---|

1. Check the connection of the brake switch connector (Looseness and poor contact).

**Was any failure found?**

| YES | NO |
|---|---|
| **Connect securely, repair if needed. Perform After-inspection work. (Clear all past DTC. Check no DTC is stored after test drive.)** | **Go to step 6.** |

| 6 | Inspect the brake switch |
|---|---|

1. Check the installation of the brake switch.
2. Check if the brake switch is properly adjusted.

**Was any failure found?**

| YES | NO |
|---|---|
| **Adjust the brake switch so that it is correctly installed. Perform After-inspection work. (Clear all past DTC. Check no DTC is stored after test drive.)** | **Go to step 7.** |

| 7 | Inspect the brake switch unit |
|---|---|

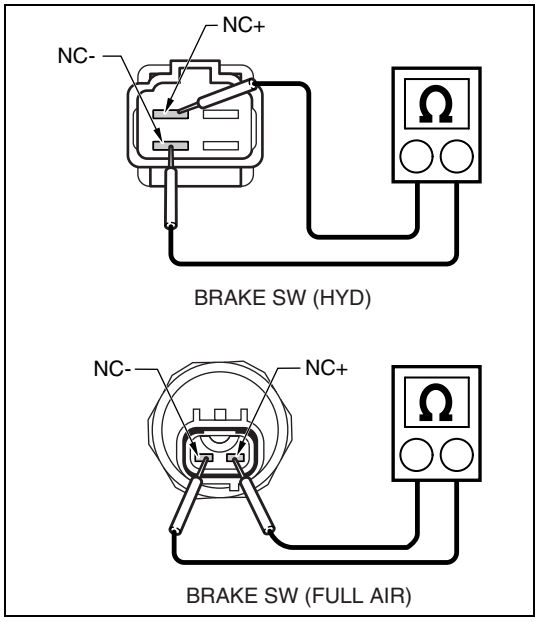


SAPH16F041000059

1. Set the starter switch to the "LOCK" position.
2. Disconnect the brake switch connector.
3. Use the electrical tester to measure the resistance between the terminals of the brake switch.

| Measurement conditions | Tester connections | Standard values |
|---|---|---|
| **Starter switch: LOCK** | **Brake switch NC+ – NC-** | **Depress the brake pedal: ∞ Ω Release the brake pedal: 2 Ω or less** |

**Do the measurements meet the standard value?**

**YES**

**Go to step 8.**

**NO**

**Replace the brake switch.**
**Perform After-inspection work. (Clear all past DTC. Check no DTC is stored after test drive.)**

| 8 | Inspect the brake switch power supply |
|---|---|

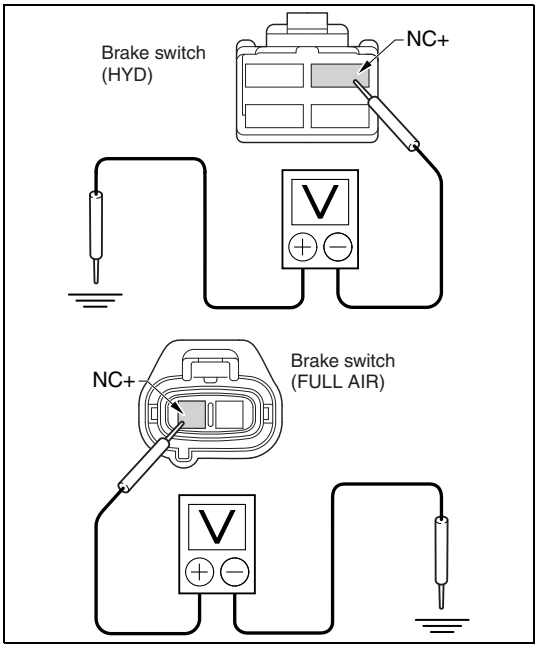


SAPH16F041000060

1. Set the starter switch to the "ON" position.

2. Use the electrical tester to measure the voltage between the terminal NC+ of the brake switch vehicle-side connector and the ground.

| Measurement conditions | Tester connections | Standard values |
|---|---|---|
| **Starter switch: ON** | **Brake switch vehicle-side connector NC+ – Ground** | **10 – 16 V** |

**Do the measurements meet the standard value?**

**YES**

**Repair or replace the wire harness between the brake switch and the vehicle control ECU. Perform After-inspection work. (Clear all past DTC. Check no DTC is stored after test drive.)**

**NO**

**Repair or replace the brake switch power supply circuit (Fuse, wire harness). Perform After-inspection work. (Clear all past DTC. Check no DTC is stored after test drive.)**

# NO ACTIVATION/RELEASE OF CRUISE FUNCTION

EN01H16F04100F03001020

## INSPECTION PROCEDURE

| 1 | Inspect the vehicle control ECU |
|---|---|

1. Perform "VEHICLE CONTROL ECU INSPECTION", ensure that there is no other abnormality.

**Was any failure found?**

| YES | NO |
|---|---|
| **Repair or replace the failure part. Perform After-inspection work. (Clear all past DTC. Check no DTC is stored after test drive.)** | **Go to step 2.** |

| 2 | Read the DTC [HINO DX II ] |
|---|---|

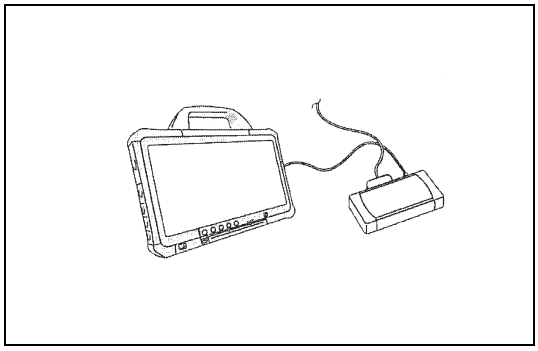

SAPH16F041000061

1. Set the starter switch to the "LOCK" position.
2. Connect the vehicle to HINO DX II .
3. Set the starter switch to the "ON" position.
4. Select [Vehicle control ECU] and [Engine ECU], and check if any DTC has been detected.

**Has any DTC been detected in the vehicle control ECU and in the engine ECU?**

| YES | NO |
|---|---|
| **Go to diagnosis procedure of a related DTC.** | **Go to step 3.** |

| 3 | Inspect the cruise main switch [HINO DX II ] |
|---|---|

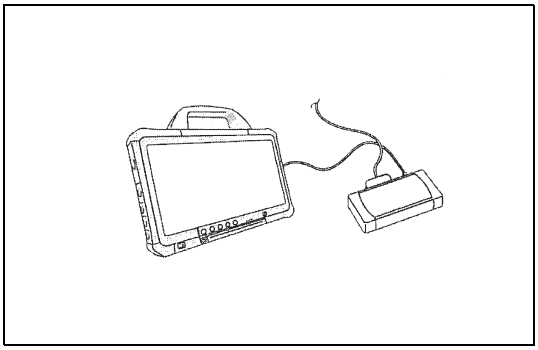

SAPH16F041000062

1. Set the starter switch to the "ON" position.
2. Select [Vehicle control ECU] on HINO DX II .
3. Select following items from the [Data monitor Setting] menu, and measure them.

| Measurement conditions | Monitoring items | Standard values |
|---|---|---|
| Starter switch: ON<br>Cruise main switch: ON | Cruise main switch | ON |

**Do the measurements meet the standard value?**

**YES**

**Go to step 8.**

**NO**

**Go to step 4.**

| 4 | Inspect the cruise main switch signal circuit |
|---|---|

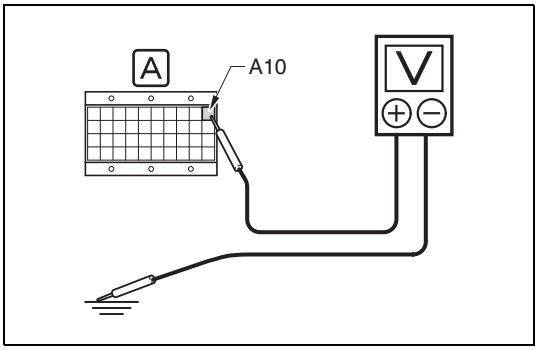


SAPH16F041000063

1. Set the starter switch to the "LOCK" position.
2. Connect the signal check harness to the vehicle-side connector of the vehicle control ECU. (Do not connect the harness to the ECU).
3. Set the starter switch to the "ON" position.
4. Use the electrical tester to measure the voltage between the terminals of the vehicle control ECU (signal check harness) and the ground.

| Measurement conditions | Tester connections | Standard values |
|---|---|---|
| Starter switch: ON | Vehicle control ECU (signal check harness) CRSW(A10) – Ground | Cruise main switch<br>- ON: 10 – 16 V<br>- OFF: 0 V |

**Do the measurements meet the standard value?**

**YES**

**Replace the vehicle control ECU.**
**Perform After-inspection work. (Clear all past DTC. Check no DTC is stored after test drive.)**

**NO**

**Go to step 5.**

| 5 | Inspect the cruise main switch connector |
|---|---|

1. Check the connection of the cruise main switch connector (Looseness and poor contact).

**Was any failure found?**

**YES**

**Connect securely, repair if needed.**
**Perform After-inspection work. (Clear all past DTC. Check no DTC is stored after test drive.)**

**NO**

**Go to step 6.**

| 6 | Inspect the cruise main switch unit |
|---|---|

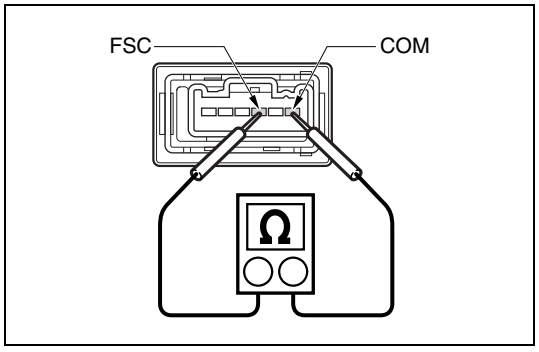

SAPH16F041000064

1. Set the starter switch to the "LOCK" position.
2. Disconnect the cruise main switch connector.
3. Use the electrical tester to measure the resistance between the terminals of the cruise main switch.

| Tester connections | Standard values |
|---|---|
| **Cruise main switch**<br>**COM – FSC** | **Cruise main switch**<br>**- ON: Less than 1 Ω**<br>**- OFF: ∞ Ω** |

**Do the measurements meet the standard value?**

**YES**

**Go to step 7.**

**NO**

**Replace the cruise main switch**
**Perform After-inspection work. (Clear all past DTC. Check no DTC is stored after test drive.)**

| 7 | Inspect the cruise main switch power supply |
|---|---|

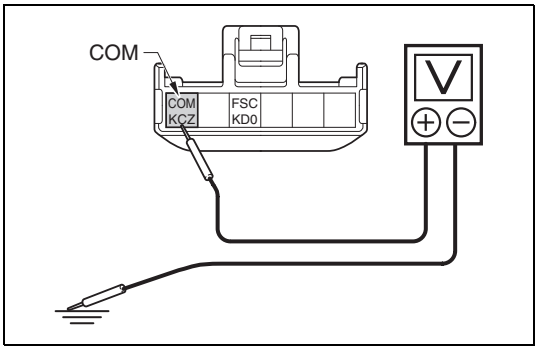


SAPH16F041000065

1. Set the starter switch to the "ON" position.
2. Use the electrical tester to measure the voltage between the terminal COM of the cruise main switch vehicle-side connector and the ground.

| Measurement conditions | Tester connections | Standard values |
|---|---|---|
| **Starter switch: ON** | **Cruise main switch vehicle-side connector COM – Ground** | **10 – 16 V** |

**Do the measurements meet the standard value?**

**YES**

**Go to step 8.**

**NO**

- **Check the fuse VCS_ACT2 (Fusing and irregular contact).**
- **Repair or replace the wire harness between the cruise main switch and the vehicle control ECU.**

**Perform After-inspection work. (Clear all past DTC. Check no DTC is stored after test drive.)**

| 8 | Inspect the brake switch [HINO DX II ] |
|---|---|

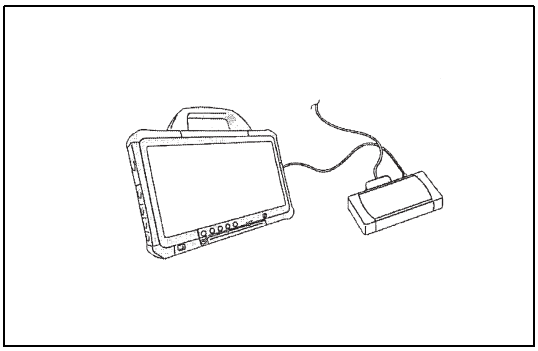

SAPH16F041000066

1. Set the starter switch to the "ON" position.
2. Select [Vehicle control ECU] on HINO DX II .
3. Select following items from the [Data monitor Setting] menu, and measure them.

| Measurement conditions | Monitoring items | Standard values |
|---|---|---|
| **Starter switch: ON** | **Brake switch** | **Depress the brake pedal: ON**<br>**Release the brake pedal: OFF** |

**Do the measurements meet the standard value?**

YES

**Procedure completed.**
**Perform After-inspection work. (Clear all past DTC. Check no DTC is stored after test drive.)**

NO

**Go to step 9.**

| 9 | Inspect the brake switch signal circuit |
|---|---|

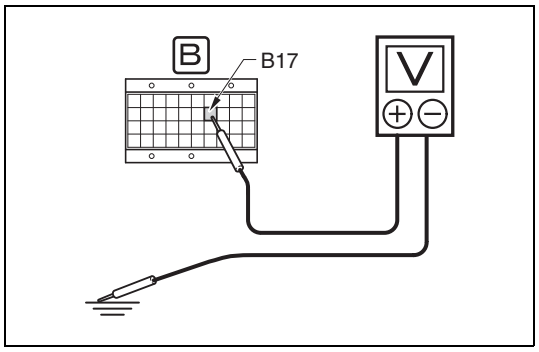


SAPH16F041000067

1. Set the starter switch to the "LOCK" position.
2. Connect the signal check harness to the vehicle-side connector of the vehicle control ECU. (Do not connect the harness to the ECU).
3. Set the starter switch to the "ON" position.
4. Use the electrical tester to measure the voltage between the terminals of the vehicle control ECU (signal check harness) and the ground.

| Measurement conditions | Tester connections | Standard values |
|---|---|---|
| Starter switch: ON | Vehicle control ECU (signal check harness) TBSW(B17) – Ground | Depress the brake pedal: 0 V<br>Release the brake pedal: 10 – 16 V |

**Do the measurements meet the standard value?**

YES

**Replace the vehicle control ECU**
**Perform After-inspection work. (Clear all past DTC. Check no DTC is stored after test drive.)**

NO

**Go to step 10.**

| 10 | Inspect the brake switch connector |
|---|---|

1. Check the connection of the brake switch connector (Looseness and poor contact).

**Was any failure found?**

**YES**

**Connect securely, repair if needed.**
**Perform After-inspection work. (Clear all past DTC. Check no DTC is stored after test drive.)**

**NO**

**Go to step 11.**

| 11 | Inspect the brake switch |
|---|---|

1. Check the installation of the brake switch.
2. Check if the brake switch is properly adjusted.

**Was any failure found?**

**YES**

**Adjust the brake switch so that it is correctly installed.**
**Perform After-inspection work. (Clear all past DTC. Check no DTC is stored after test drive.)**

**NO**

**Go to step 12.**

| 12 | Inspect the brake switch unit |
|---|---|

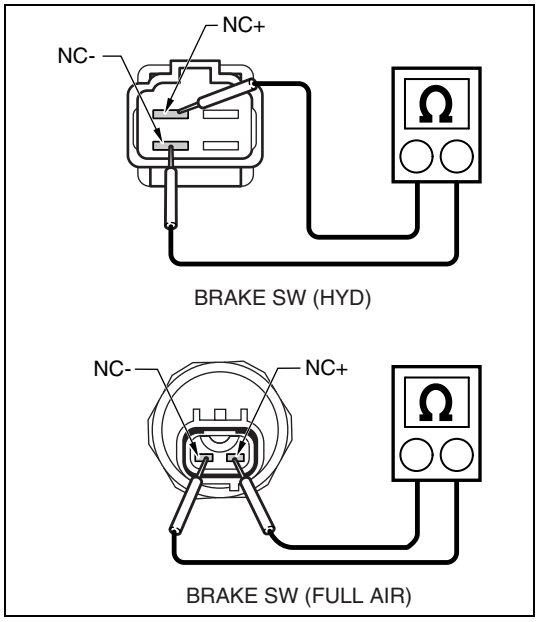


SAPH16F041000068

1. Set the starter switch to the "LOCK" position.
2. Disconnect the brake switch connector.
3. Use the electrical tester to measure the resistance between the terminals of the brake switch.

| Measurement conditions | Tester connections | Standard values |
|---|---|---|
| **Starter switch: LOCK** | **Brake switch NC+ – NC-** | **Depress the brake pedal: ∞ Ω Release the brake pedal: 2 Ω or less** |

**Do the measurements meet the standard value?**

**YES**

**Go to step 13.**

**NO**

**Replace the brake switch.**
**Perform After-inspection work. (Clear all past DTC. Check no DTC is stored after test drive.)**

| 13 | Inspect the brake switch power supply |
|---|---|

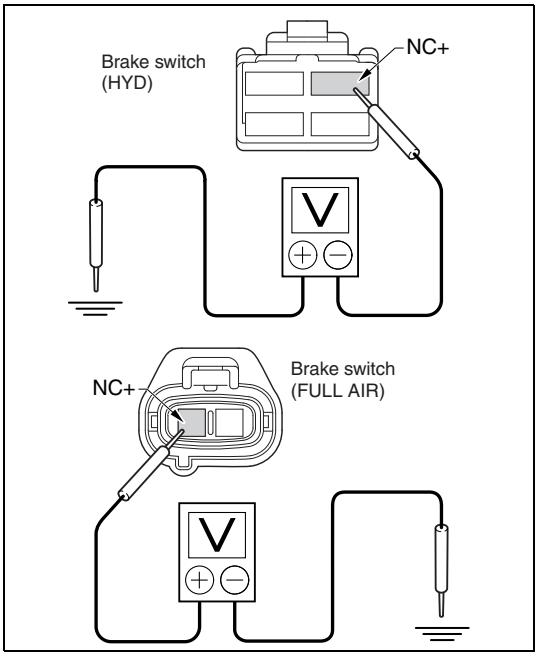


SAPH16F041000069

1. Set the starter switch to the "ON" position.

2. Use the electrical tester to measure the voltage between the terminal NC+ of the brake switch vehicle-side connector and the ground.

| Measurement conditions | Tester connections | Standard values |
|---|---|---|
| **Starter switch: ON** | **Brake switch vehicle-side connector NC+ – Ground** | **10 – 16 V** |

**Do the measurements meet the standard value?**

**YES**

**Repair or replace the wire harness between the brake switch and the vehicle control ECU. Perform After-inspection work. (Clear all past DTC. Check no DTC is stored after test drive.)**

**NO**

**Repair or replace the brake switch power supply circuit (Fuse, wire harness). Perform After-inspection work. (Clear all past DTC. Check no DTC is stored after test drive.)**

# NO ACTIVATION/RELEASE OF ECO MODE

EN01H16F04100F03001021

## INSPECTION PROCEDURE

| 1 | Inspect the vehicle control ECU |
|---|---|

1. Perform "VEHICLE CONTROL ECU INSPECTION", ensure that there is no other abnormality.

**Was any failure found?**

| YES | NO |
|---|---|
| **Repair or replace the failure part. Perform After-inspection work. (Clear all past DTC. Check no DTC is stored after test drive.)** | **Go to step 2.** |

| 2 | Read the DTC [HINO DX II ] |
|---|---|

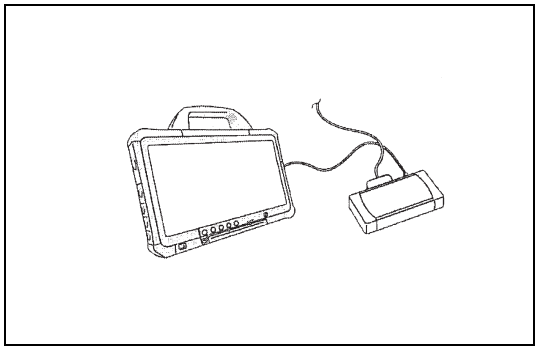

SAPH16F041000070

1. Set the starter switch to the "LOCK" position.
2. Connect the vehicle to HINO DX II .
3. Set the starter switch to the "ON" position.
4. Select [Vehicle control ECU] and check if any of the DTCs have been detected.

**Has DTC been detected?**

| YES | NO |
|---|---|
| **Go to diagnosis procedure of a related DTC.** | **Go to step 3.** |

## 3 Inspect the economy running switch [HINO DX II ]

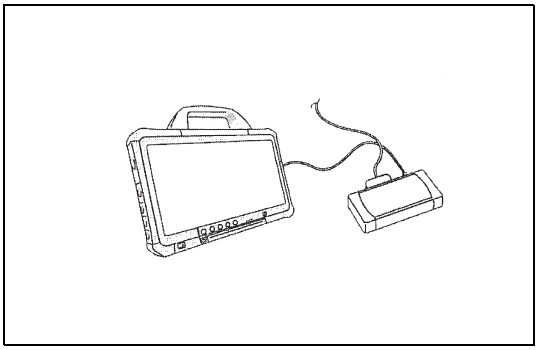

SAPH16F041000071

1. Select [Vehicle control ECU] on HINO DX II .
2. Select following items from the [Data monitor Setting] menu, and measure them.

| Measurement conditions | Tester connections | Standard values |
|---|---|---|
| Starter switch: ON | Economy running switch | ON |

**Was any failure found?**

**YES**

**Procedure completed.**
**Perform After-inspection work. (Clear all past DTC. Check no DTC is stored after test drive.)**

**NO**

**Go to step 4.**

## 4 Inspect the economy running switch signal circuit

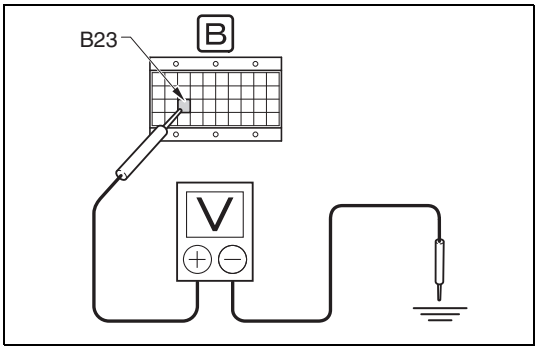


SAPH16F041000072

1. Set the starter switch to the "LOCK" position.
2. Connect the signal check harness to the vehicle-side connector of the vehicle control ECU. (Do not connect the harness to the ECU).
3. Set the starter switch to the "ON" position.
4. Use the electrical tester to measure the voltage between the terminals of the vehicle control ECU (signal check harness) and the ground.

| Measurement conditions | Tester connections | Standard values |
|---|---|---|
| Starter switch: ON | Vehicle control ECU (signal check harness) AFSW(B23) – Ground | Economy running switch<br>- ON: 10 – 16 V<br>- OFF: 0 V |

**Do the measurements meet the standard value?**

**YES**

**Replace the vehicle control ECU.**
**Perform After-inspection work. (Clear all past DTC. Check no DTC is stored after test drive.)**

**NO**

**Go to step 5.**

## 5 Inspect the economy running switch connector

1. Check the connection of the economy running switch connector (Looseness and poor contact).

**Was any failure found?**

**YES**

**Connect securely, repair if needed.**
**Perform After-inspection work. (Clear all past DTC. Check no DTC is stored after test drive.)**

**NO**

**Go to step 6.**

## 6 Inspect the economy running switch unit

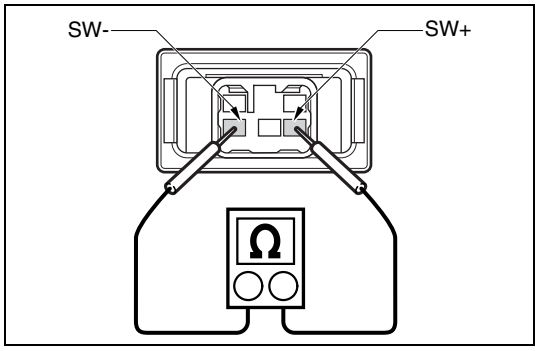

SAPH16F041000073

1. Set the starter switch to the "LOCK" position.
2. Disconnect the economy running switch connector.
3. Use the electrical tester to measure the resistance between the terminals of the economy running switch.

| Tester connections | Standard values |
|---|---|
| **Economy running switch SW+ – SW-** | **Economy running switch**<br>**- ON: Less than 1 Ω**<br>**- OFF: ∞ Ω** |

**Do the measurements meet the standard value?**

**YES**

**Go to step 7.**

**NO**

**Replace the economy running switch.**
**Perform After-inspection work. (Clear all past DTC. Check no DTC is stored after test drive.)**

| 7 | Inspect the economy running switch power supply |
|---|---|

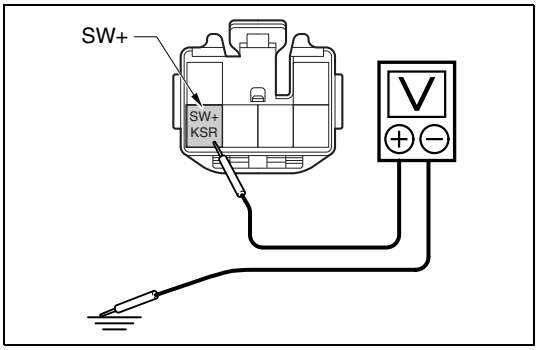


SAPH16F041000074

1. Set the starter switch to the "ON" position.
2. Use the electrical tester to measure the voltage between the terminal SW+ of the economy running switch vehicle-side connector and the ground.

| Measurement conditions | Tester connections | Standard values |
|---|---|---|
| **Starter switch: ON** | **Economy running switch vehicle-side connector SW+ – Ground** | **10 – 16 V** |

**Do the measurements meet the standard value?**

**YES**

**Repair or replace the wire harness between the economy running switch and the vehicle control ECU.**
**Perform After-inspection work. (Clear all past DTC. Check no DTC is stored after test drive.)**

**NO**

- **Check the fuse VCS_ACT2 (Fusing and irregular contact).**
- **Repair or replace the wire harness between the cruise main switch and the terminal AP1 of the vehicle control ECU.**

**Perform After-inspection work. (Clear all past DTC. Check no DTC is stored after test drive.)**

# CAN COMMUNICATION

12-001

**CAN COMMUNICATION TROUBLESHOOTING.....12-2**
Outline.....12-2
Definition of Terms.....12-2
Troubleshooting Procedure.....12-3
Work Flow.....12-3
ECU individual code list.....12-4
CAN communication circuit diagram.....12-5
CAN communication relation connector location..12-8
**ENGINE CAN COMMUNICATION LINE.....12-12**
ABNORMAL CAN COMMUNICATION DTC DETECTED.....12-12
CONNECTION DIAGRAM.....12-12
CAN COMMUNICATION LINE MALFUNCTION PART DETERMINATION TABLE.....12-12
PRE-INSPECTION FOR ENGINE CAN COMMUNICATION LINE.....12-14
DISCONNECTION INSPECTION FOR ENGINE CAN_H/L_COMMUNICATION LINE.....12-17
INSPECTION FOR SHORT-CIRCUIT IN CAN H-LINE.....12-23
INSPECTION FOR SHORT-CIRCUIT IN CAN L-LINE.....12-32
INSPECTION FOR EGR CONTROLLER CAN COMMUNICATION LINE.....12-41
INSPECTION FOR VNT CONTROLLER CAN COMMUNICATION LINE.....12-46
INSPECTION FOR DCU CAN COMMUNICATION LINE (ENGINE CAN COMMUNICATION LINE).....12-51
INSPECTION FOR NOx sensor 1 CAN COMMUNICATION LINE.....12-56
INSPECTION FOR NOx sensor 2 CAN COMMUNICATION LINE.....12-62
INSPECTION FOR DEF SENSOR CAN COMMUNICATION LINE.....12-68
INSPECTION FOR PM SENSOR CAN COMMUNICATION LINE.....12-74
**DIAGNOSIS CAN COMMUNICATION LINE.....12-80**
ABNORMAL CAN COMMUNICATION DTC DETECTED.....12-80
CONNECTION DIAGRAM.....12-80
CAN COMMUNICATION LINE MALFUNCTION PART DETERMINATION TABLE.....12-80
PRE-INSPECTION FOR DIAGNOSIS CAN COMMUNICATION LINE.....12-82
DISCONNECTION INSPECTION FOR DIAGNOSIS CAN_H/L_COMMUNICATION LINE.....12-85
INSPECTION FOR SHORT-CIRCUIT IN DIAGNOSIS CAN H-LINE.....12-89
INSPECTION FOR SHORT-CIRCUIT IN DIAGNOSIS CAN L-LINE.....12-93
INSPECTION FOR DCU CAN COMMUNICATION LINE (DIAGNOSIS CAN COMMUNICATION LINE).....12-98
INSPECTION FOR ENGINE ECU CAN COMMUNICATION LINE.....12-102
**CONTROL CAN COMMUNICATION LINE.....12-107**
ABNORMAL CAN COMMUNICATION DTC DETECTED.....12-107
CONNECTION DIAGRAM (ALLISON AUTOMATIC TRANSMISSION).....12-107
CAN COMMUNICATION LINE MALFUNCTION PART DETERMINATION TABLE (ALLISON AUTOMATIC TRANSMISSION).....12-107
CONNECTION DIAGRAM (MANUAL TRANSMISSION).....12-108
CAN COMMUNICATION LINE MALFUNCTION PART DETERMINATION TABLE (MANUAL TRANSMISSION).....12-108
PRE-INSPECTION FOR CAN COMMUNICATION LINE.....12-109
DISCONNECTION INSPECTION FOR CAN_H/L_COMMUNICATION LINE.....12-113
INSPECTION FOR SHORT-CIRCUIT IN CAN H-LINE.....12-116
INSPECTION FOR SHORT-CIRCUIT IN CAN L-LINE.....12-118
INSPECTION FOR AUTOMATIC TRANSMISSION ECU CAN COMMUNICATION LINE.....12-120

# CAN COMMUNICATION TROUBLESHOOTING

## Outline

EN01H16ZZZ110F03002001

- A CAN (Controller Area Network) is a multiplex communication device for mounting on vehicles, using serial communication for real-time applications, and offering an excellent data communication speed (250 kbps/500 kbps), coupled with an error detection function.
- For CAN communication, a twisted cable pair is used, consisting of a CAN H-line and a CAN L-line; communication is performed using differential voltage.
- This vehicle uses the following 3 systems of CAN communication (lines).
  Engine CAN communication: For controlling the engine and the after treatment system.
  Diagnosis CAN communication: For communication between the diagnosis unit and the ECU, performing trouble code output via the CAN communication system.
  Control CAN communication: Control of combination meter, AT, and other vehicle-related items.

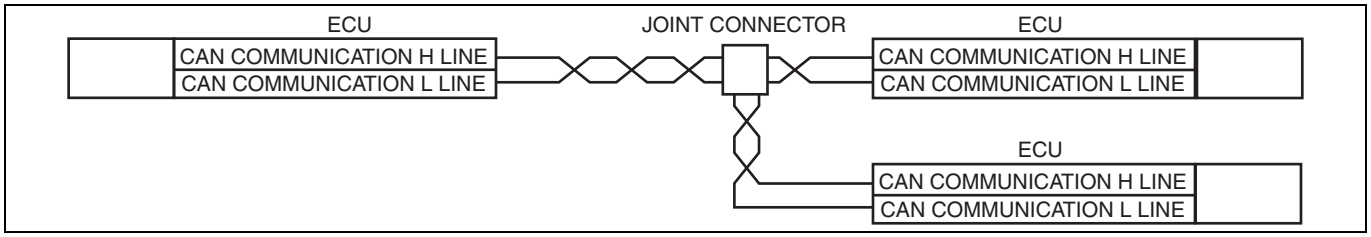


SAPH16ZZZ1100001

## Definition of Terms

EN01H16ZZZ110F03002002

**<Main line>**

- The harness between two termination circuits on a CAN bus (communication line) is defined as the main line. It becomes the trunk bus for CAN communication.

**<Branch line>**

- Lines branching from the main line - such as the trunk bus of the CAN bus to an ECU or a sensor - are defined as branch lines.

**<Termination circuit>**

- Circuits consisting of resistors and capacitors, serving to convert the communication circuit of a CAN communication to a bus voltage, are called termination circuits.
- Two termination circuits must be provided on a bus.

## Troubleshooting Procedure

EN01H16ZZZ110F03002003

- As a CAN communication trouble code is put out when there is an internal fault in an ECU of a system using CAN communication - or in case of power supply interruption -, attention must be paid to the simultaneous detection of an internal fault in the respective ECU, even when there is no malfunction in the CAN communication line. If a power supply trouble code is detected at the same time, the power supply trouble code must be checked first.
- When a CAN communication malfunction has been confirmed, first perform the "Pre-inspection for the CAN communication line" and confirm that there is no abnormality of the CAN bus main line circuit.
- When there is no response from an ECU performing CAN communication to the diagnosis unit (HINO DX II ), make sure that there are no abnormalities of the diagnosis connector (DLC) line of the diagnosis CAN communication line and the CAN bus main line.
- When a CAN communication malfunction has been confirmed, make sure that no abnormalities (poor contact or looseness, pulled) of related connectors exist. When a connector has been disengaged, confirm that connector terminals and connector case are free of breakage, deformation, corrosion, etc.

## Work Flow

EN01H16ZZZ110F03002004

1 Entry of the vehicle into the workshop

↓

2 Inquiry and Malfunction Confirmation

↓

3 Confirmation of the Vehicle Equipment Specifications
- Confirm the vehicle equipment specifications.

4 Confirmation of the Trouble Code (DTC)
- Use the diagnosis unit (Hino-DX) and confirm the DTC.

↓
- When P**** or C**** are detected in addition to a CAN communication fault U****, first perform the fault diagnosis for the related DTC.

5 Pre-inspection for the CAN Communication Line
- Refer to the "Pre-inspection for the CAN communication line" and confirm that the main line of the CAN communication line is free of disconnections/short-circuits, termination resistor faults, etc.

↓
- In case of faults, go to step 7.

6 Inspection for Branch Lines of the CAN Communication Line
- If the pre-inspection has shown no abnormalities, refer to the "CAN COMMUNICATION LINE MALFUNCTION PART DETERMINATION TABLE" and perform the diagnosis items for the detected trouble codes.

↓

7 Repair or Replacement

↓

8 Confirmation after Inspection (DTC confirmation)
- Clear all past DTC and perform a test drive.

↓
- Use the diagnosis unit (Hino-DX) and confirm that no DTC is detected. In case of detection, go to step 4.

Procedure completed

SAPH16ZZZ1100002

## ECU individual code list

EN01H16ZZZ110F03002005

1. Engine ECU

| DTC No | DIAGNOSIS ITEM | CAN COMMUNICATION LINE |
|---|---|---|
| U0073 | ENGINE POST-PROCESSING CAN COMMUNICATION LINE MALFUNCTION (BUS OFF) | ENGINE |
| U010A | EGR CONTROLLER CAN COMMUNICATION LINE MALFUNCTION | ENGINE |
| U010C | VNT CONTROLLER CAN COMMUNICATION LINE MALFUNCTION | ENGINE |
| U010E | DCU CAN COMMUNICATION LINE MALFUNCTION | ENGINE |
| U029D | NOx SENSOR1 CAN COMMUNICATION LINE MALFUNCTION | ENGINE |
| U029E | NOx SENSOR2 CAN COMMUNICATION LINE MALFUNCTION | ENGINE |
| U02A2 | DISCONNECTION OF CAN COMMUNICATION LINE(DEF SENSOR) | ENGINE |
| U02A3 | PM SENSOR CAN COMMUNICATION LINE MALFUNCTION | ENGINE |
| U0301 | SOFTWARE INCOMPATIBILITY WITH DeNOx ECU | ENGINE |
| U1001 | CAN COMMUNICATION LINE MALFUNCTION(VEHICLES) | DIAGNOSIS |
| U110A | CAN COMMUNICATION LINE MALFUNCTION(VEHICLES) | DIAGNOSIS |

2. DCU

| DTC No | DIAGNOSIS ITEM | CAN COMMUNICATION LINE |
|---|---|---|
| U0029 | CAN COMMUNICATION LINE MALFUNCTION(ENGINE) | ENGINE |
| U0038 | CAN COMMUNICATION LINE MALFUNCTION(VEHICLES) | DIAGNOSIS |
| U0100 | CAN COMMUNICATION LINE MALFUNCTION(ENGINE) | ENGINE/DIAGNOSIS |
| U029D | NOx SENSOR1 CAN COMMUNICATION LINE MALFUNCTION | ENGINE |
| U029E | NOx SENSOR2 CAN COMMUNICATION LINE MALFUNCTION | ENGINE |
| U02A2 | DISCONNECTION OF CAN COMMUNICATION LINE(DEF SENSOR) | ENGINE |

3. VCS

| DTC No | DIAGNOSIS ITEM | CAN COMMUNICATION LINE |
|---|---|---|
| U0101 | DISCONNECTION OF CAN COMMUNICATION LINE(TRANSMISSION) | CONTROL |
| U0105 | DISCONNECTION OF CAN COMMUNICATION LINE(METER) | DIAGNOSIS |
| U0155 | DISCONNECTION OF CAN COMMUNICATION LINE(ENGINE) | CONTROL |

# CAN communication circuit diagram

EN01H16ZZZ110F03002006

1. Engine CAN communication line

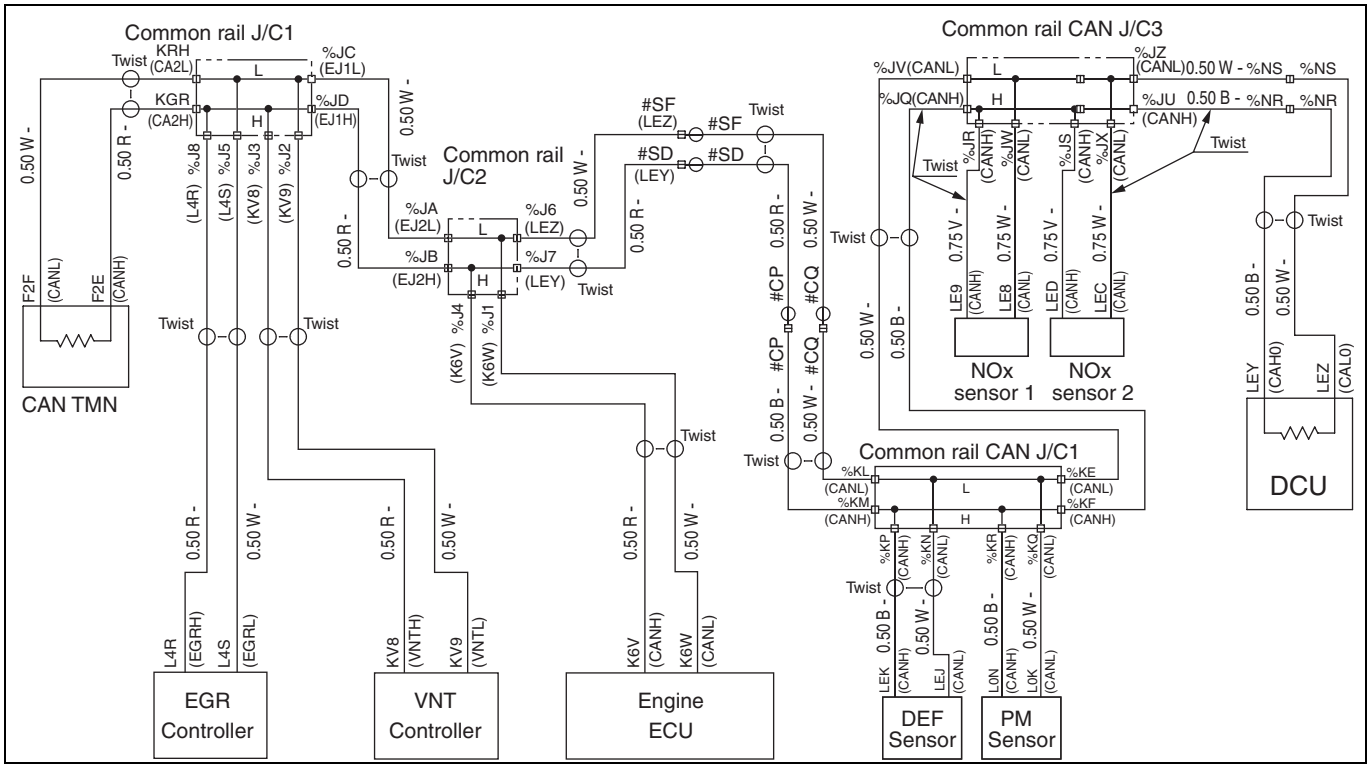


SAPH16ZZZ1100003

2. Diagnosis CAN communication line

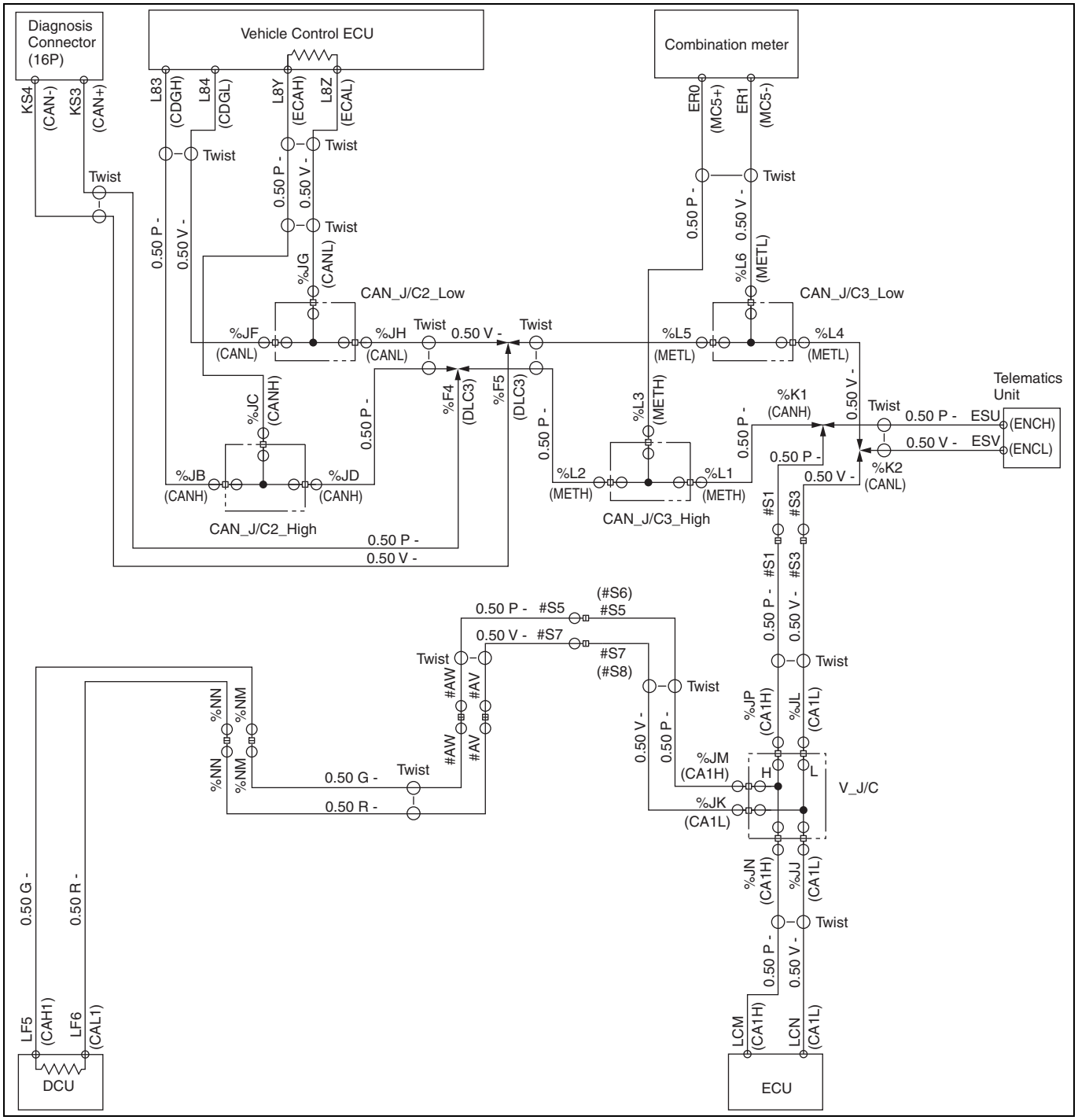


SAPH16ZZZ1100004

3. Control CAN communication

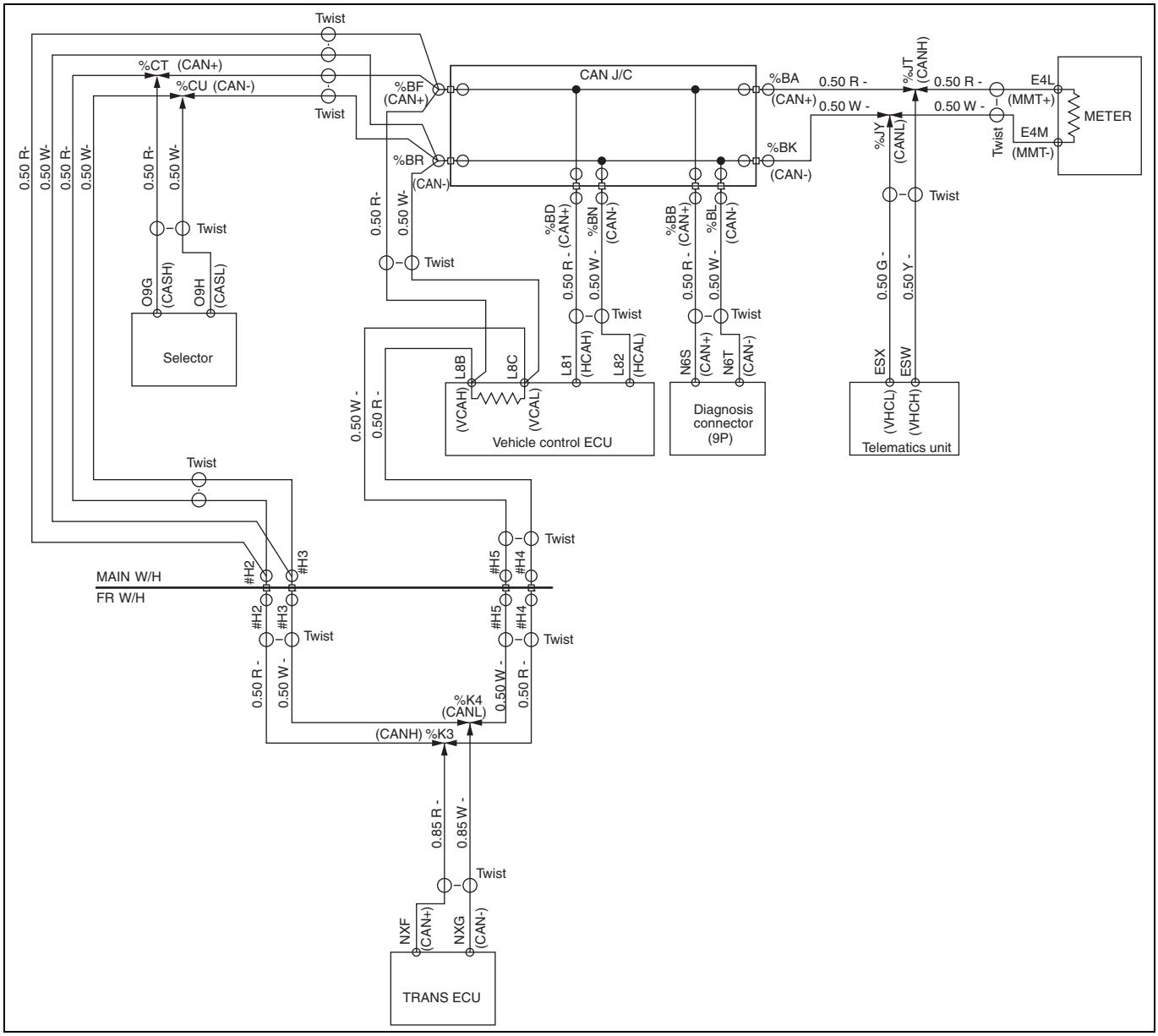


SAPH16ZZZ1100005

## CAN communication relation connector location

EN01H16ZZZ110F03002007

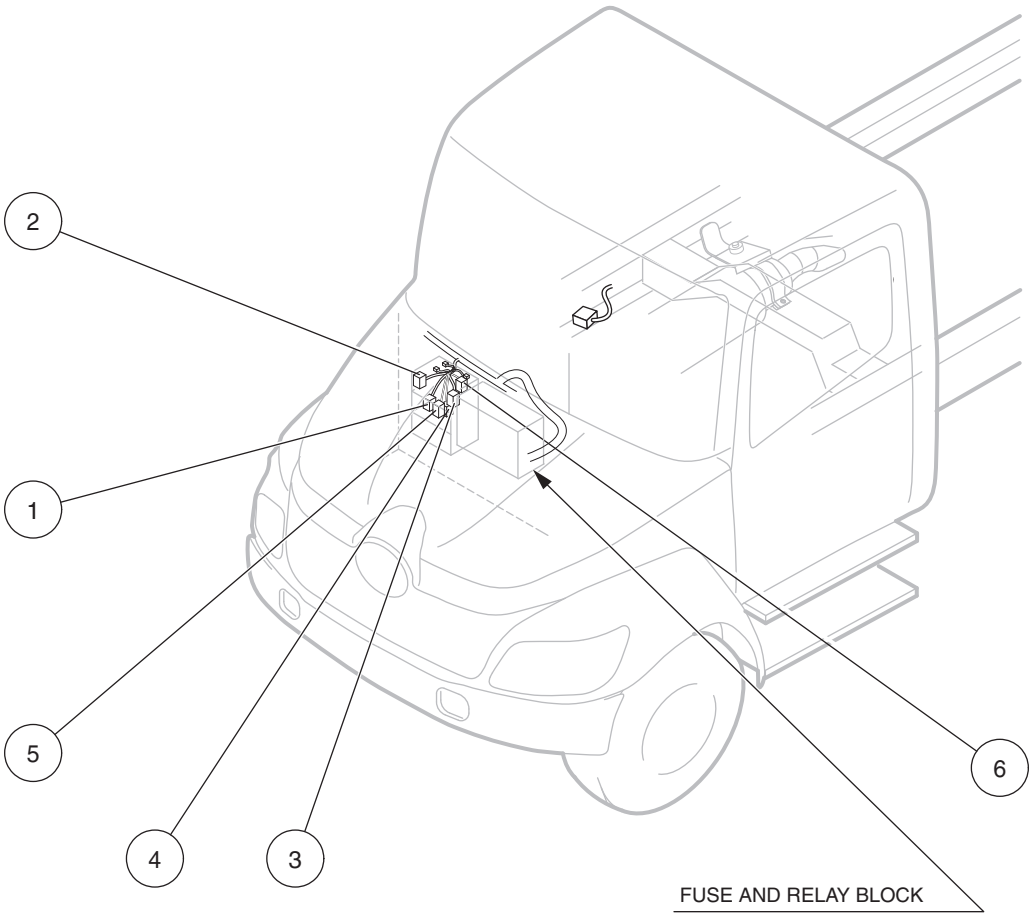


1: J/C SIGNAL
2: Common rail J/C No.1
3: Common rail J/C No.2
4: CAN J/C 2 High
5: CAN J/C 2 Low
6: CAN TMN6

SAPH16ZZZ1100006

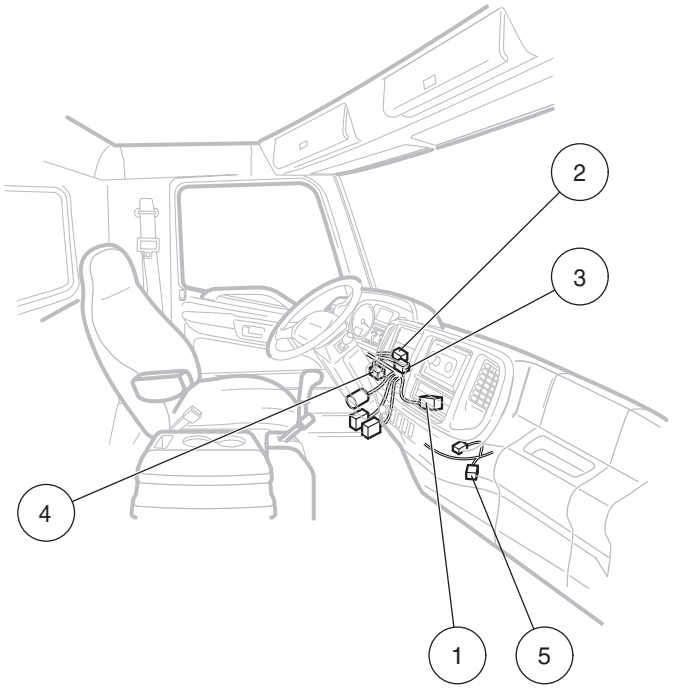


1: J/C EARTH
2: J/C EARTH 4P
3: CAN J/C 3 High
4: CAN J/C 3 Low
5: CAN J/C

SAPH16ZZZ1100007

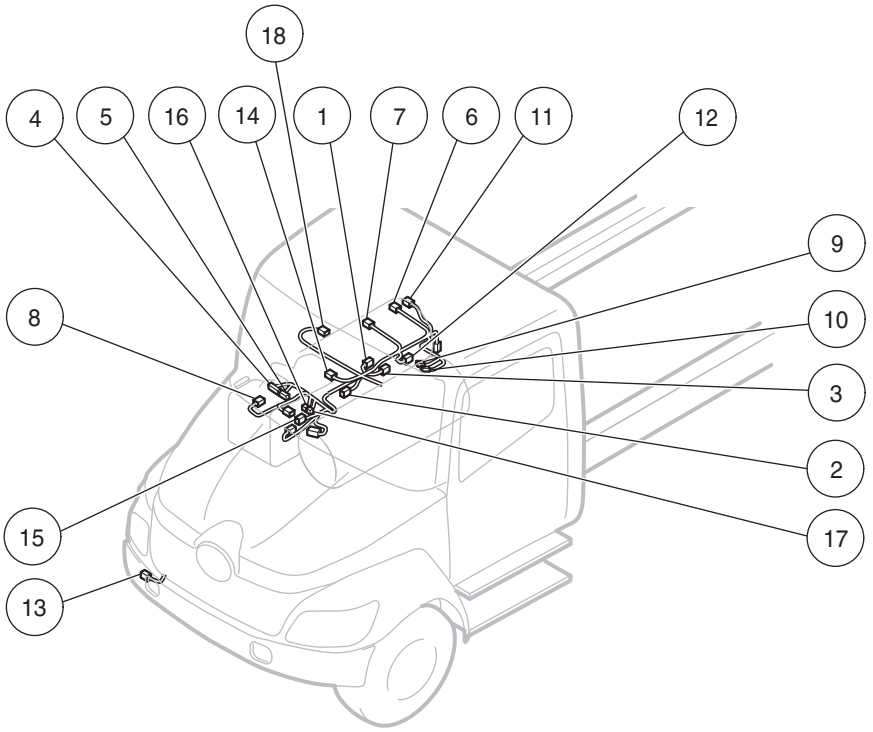


1: Common rail CAN J/C No.1
2: Common rail CAN J/C No.2
3: Common rail CAN J/C No.3
4: DCU 53P
5: DCU 86P
6: NOx sensor 1
7: NOx sensor 2
8: DEF sensor
9: Exhaust gas temperature sensor 3 (DOC inlet)
10: Exhaust gas temperature sensor 4 (DPR inlet)
11: Exhaust gas temperature sensor 5 (DPR outlet)
12: Differential gas pressure sensor
13: Ambient temperature sensor
14: SCR front temperature sensor
15: DEF heater 1
16: DEF heater 2
17: DEF heater 3
18: PM sensor

SAPH16ZZZ1100008

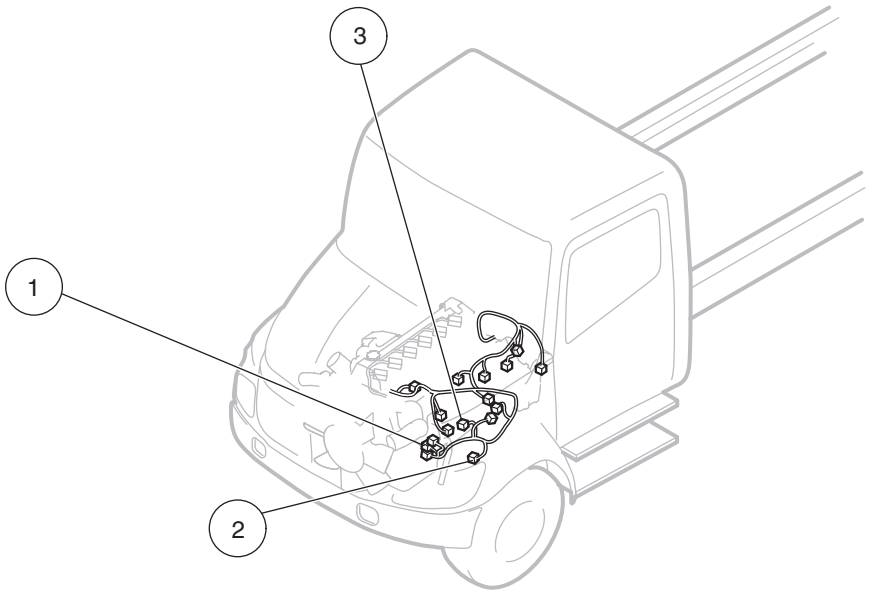


1: No.30 J/C
2: VNT controller
3: EGR controller

SAPH16ZZZ1100009

# ENGINE CAN COMMUNICATION LINE

## ABNORMAL CAN COMMUNICATION DTC DETECTED

EN01H16ZZZ110F03003001

If any DTC of "CAN communication abnormal" is detected, carry out "PRE-INSPECTION FOR ENGINE CAN COMMUNICATION LINE" first.

## CONNECTION DIAGRAM

EN01H16ZZZ110F03003002

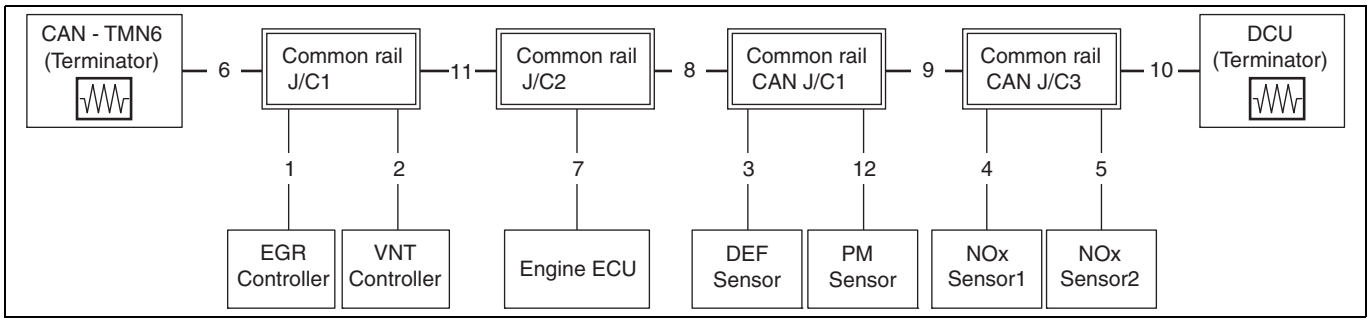


SAPH16ZZZ1100010

## CAN COMMUNICATION LINE MALFUNCTION PART DETERMINATION TABLE

EN01H16ZZZ110F03003003

1. Engine ECU

| Detected DTC | Estimated malfunction part | DTC diagnosis/inspection item |
|---|---|---|
| U010A | 1 | • Pre-inspection for Engine CAN communication line<br>• Inspection for EGR controller CAN communication line |
| U010C | 2 | • Pre-inspection for Engine CAN communication line<br>• Inspection for VNT controller CAN communication line |
| U02A2 | 3 | • Pre-inspection for Engine CAN communication line<br>• Inspection for DEF sensor CAN communication line |
| U02A3 | 12 | • Prior inspection of CAN communication line<br>• Inspecting the PM sensor CAN communication line |
| U029D | 4 | • Pre-inspection for Engine CAN communication line<br>• Inspection for NOx sensor1 CAN communication line |
| U029E | 5 | • Pre-inspection for Engine CAN communication line<br>• Inspection for NOx sensor2 CAN communication line |
| U010E | 10 | • Pre-inspection for Engine CAN communication line<br>• Inspection for DCU CAN communication line (Engine CAN communication line) |
| U010A, U010C, U029D, U029E, U0073, U010E, U02A2, U0301 | 6, 7, 8, 9, 10, 12 | • Pre-inspection for Engine CAN communication line<br>• Disconnection inspection for Engine CAN H/L communication line |

2. DCU

| Detected DTC | Estimated malfunction part | DTC diagnosis/inspection item |
|---|---|---|
| U02A2 | 3 | • Pre-inspection for Engine CAN communication line<br>• Inspection for DEF sensor CAN communication line |
| U029D | 4 | • Pre-inspection for Engine CAN communication line<br>• Inspection for NOx sensor1 CAN communication line |
| U029E | 5 | • Pre-inspection for Engine CAN communication line<br>• Inspection for NOx sensor2 CAN communication line |
| U0029 | 10 | • Pre-inspection for Engine CAN communication line<br>• Inspection for DCU CAN communication line (Engine CAN communication line) |
| U0029, U0100, U029D, U029E, U02A2 | 6, 7, 8, 9, 10, 11 | Pre-inspection for Engine CAN communication line |

# PRE-INSPECTION FOR ENGINE CAN COMMUNICATION LINE

EN01H16ZZZ110F03003004

| 1 | Inspect for +B/GND short-circuit in CAN H-line |
|---|---|

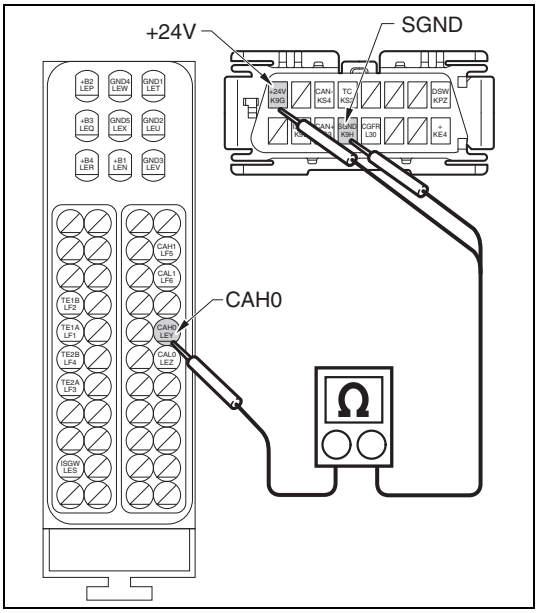


SAPH16ZZZ1100011

1. Set the starter switch to the "LOCK" position.
2. Disconnect the following sensors and controllers connected to the Engine CAN line.
- DCU(53P)
- EGR controller, VNT controller
- NOx sensors 1 & 2, DEF sensor
- CAN-TMN6 (terminating resistance)
- PM sensor
3. Use the electrical tester to check the continuity between the following terminals.
   (1) Between the CAH0 terminal in the DCU(53P) vehicle-side connector and the +24V(K9G) terminal in the DLC(16P) connector.
   (2) Between the CAH0 terminal in the DCU(53P) vehicle-side connector and the SGND(K9H) terminal in the DLC(16P) connector.

| Measurement conditions | Tester connections | Standard values |
|---|---|---|
| **Starter switch: LOCK** | **DCU vehicle-side connector – DLC(16P) connector CAH0 – +24V(K9G) CAH0 – SGND(K9H)** | **No Continuity** |

**Do the measurements meet the standard value?**

**YES**

**Go to step 2.**

**NO**

**Refer to "INSPECTION FOR SHORT-CIRCUIT IN CAN H-line" and check the CAN bus line.**

| 2 | Inspect for +B/GND short-circuit in CAN L-line |
|---|---|

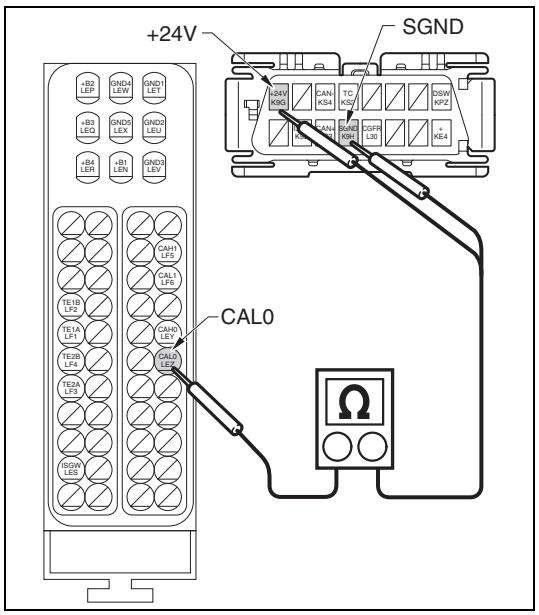


SAPH16ZZZ1100012

1. Use the electrical tester to check the continuity between the following terminals.
   (1) Between the CAL0 terminal in the DCU(53P) vehicle-side connector and the +24V(K9G) terminal in the DLC(16P) connector.
   (2) Between the CAL0 terminal in the DCU(53P) vehicle-side connector and the SGND(K9H) terminal in the DLC(16P) connector.

| Measurement conditions | Tester connections | Standard values |
|---|---|---|
| **Starter switch: LOCK** | **DCU vehicle-side connector – DLC(16P) connector CAL0 – +24V(K9G) CAL0 – SGND(K9H)** | **No Continuity** |

**Do the measurements meet the standard value?**

**YES**

**Go to step 3.**

**NO**

**Refer to "INSPECTION FOR SHORT-CIRCUIT IN CAN L-LINE" and check the CAN bus line.**

| 3 | Inspect the terminating resistance |
|---|---|

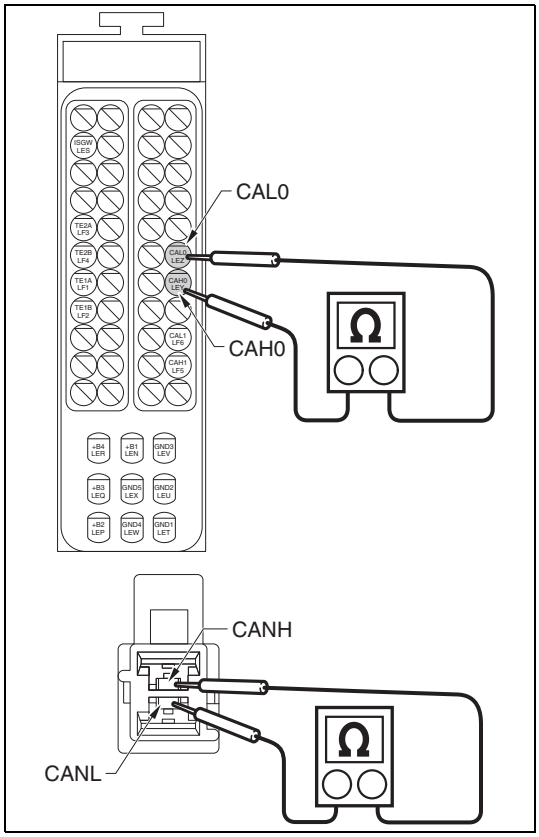


SAPH16ZZZ1100013

1. Use the electrical tester to check the continuity between the following terminals.
   (1) Between the CAH0 terminal and CAL0 terminal in the DCU (53P).
   (2) Between CANL terminal and CANH terminal in CAN-TMN6.

| Measurement conditions | Tester connections | Standard values |
|---|---|---|
| **Starter switch: LOCK** | **DCU(53P): CAH0 – CAL0 CAN-TMN6: CANL – CANH** | **120 Ω ± 10 Ω** |

**Do the measurements meet the standard value?**

**YES**

**Check if the terminals of each connector of the vehicle-side harness, DCU and CAN-TMN6 are no abnormality, then connect each connector properly, and procedure completed.**
**Refer to "CAN COMMUNICATION LINE MALFUNCTION PART DETERMINATION TABLE", and inspect the detected DTC.**

**NO**

**Replace the faulty part.**
**After replacing the part, confirm that no CAN communication system DTC is detected.**
**Perform After-inspection work. (Clear all past DTC. Check no DTC is stored after test drive.)**

# DISCONNECTION INSPECTION FOR ENGINE CAN_H/L_COMMUNICATION LINE

EN01H16ZZZ110F03003005

| 1 | Check for disconnection in CAN bus line between Common rail_CAN_J/C3 and DCU (malfunction part 10) |
|---|---|

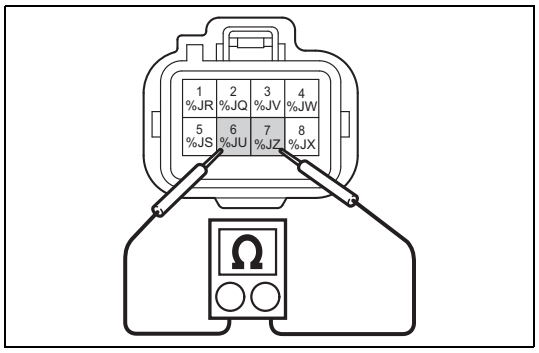


SAPH16ZZZ1100014

1. Set the starter switch to the "LOCK" position.
2. Disconnect the following sensors and controllers connected to the Engine CAN line. (Leave the DCU, engine ECU, and CAN-TMN6 connected.)
- EGR controller, VNT controller
- NOx sensor 1·2, DEF sensor
3. Disconnect the Common rail_CAN_J/C3 connector.
4. Use the electrical tester to measure the resistance between No.6(CANH) terminal and No.7(CANL) terminal at the Common rail_CAN_J/C3 connector. (DCU side)

| Measurement conditions | Tester connections | Standard values |
|---|---|---|
| Starter switch: LOCK | Common rail_CAN_J/C3 connector (DCU side) No.6(CANH) – No.7(CANL) | 110 Ω – 130 Ω |

**Do the measurements meet the standard value?**

**YES**

**Connect the Common rail_CAN_J/C3 connector, and go to step 2.**

**NO**

**CAN bus line disconnection or poor continuity between Common rail_CAN_J/C3 and the DCU**
**Repair or replace the harness.**
**Perform After-inspection work. (Clear all past DTC. Check no DTC is stored after test drive.)**

| 2 | Check for disconnection in CAN bus line between Common rail_CAN_J/C1 and Common rail_CAN_J/C3 (malfunction part 9) |
|---|---|

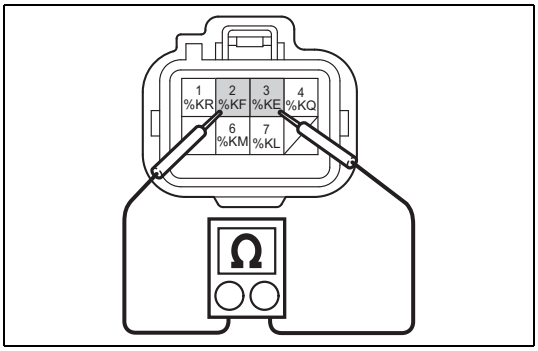


SAPH16ZZZ1100015

1. Disconnect the Common rail_CAN_J/C1 connector.
2. Use the electrical tester to measure the resistance between No.2(CANH) terminal and No.3(CANL) terminal at the Common rail_CAN_J/C1 connector. (Common rail_CAN_J/C3 side)

| Measurement conditions | Tester connections | Standard values |
|---|---|---|
| Starter switch: LOCK | Common rail_CAN_J/C1 connector (Common rail_CAN_J/C3 side) No.2(CANH) – No.3(CANL) | 110 Ω – 130 Ω |

**Do the measurements meet the standard value?**

**YES**

**Connect the Common rail_CAN_J/C1 connector, and go to step 3.**

**NO**

**CAN bus line disconnection or poor continuity between Common rail_CAN_J/C1 and the Common rail_CAN_J/C3**
**Repair or replace the harness.**
**Perform After-inspection work. (Clear all past DTC. Check no DTC is stored after test drive.)**

| 3 | Check for disconnection in CAN bus line between Common rail_J/C2 and Common rail_CAN_J/C1 (malfunction part 8) |
|---|---|

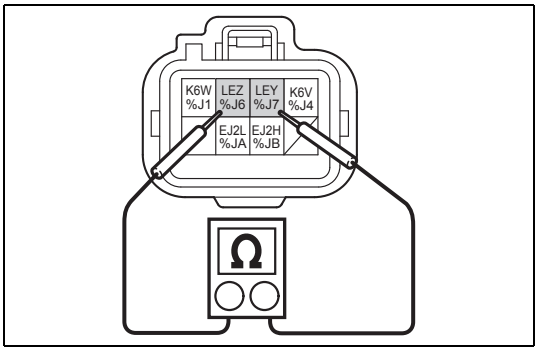


SAPH16ZZZ1100016

1. Disconnect the Common rail_J/C2 connector.
2. Use the electrical tester to measure the resistance between (LEY) terminal and (LEZ) terminal at the Common rail_J/C2 connector. (Common rail_CAN_J/C1 side)

| Measurement conditions | Tester connections | Standard values |
|---|---|---|
| Starter switch: LOCK | Common rail_J/C2 connector (Common rail_CAN_J/C1 side) LEY terminal (CANH) – LEZ terminal (CANL) | 110 Ω – 130 Ω |

**Do the measurements meet the standard value?**

**YES**

**Connect the Common rail_J/C2 connector, and go to step 4.**

**NO**

**CAN bus line disconnection or poor continuity between Common rail_J/C2 and the Common rail_CAN_J/C1.**
**Repair or replace the harness.**
**Perform After-inspection work. (Clear all past DTC. Check no DTC is stored after test drive.)**

| 4 | **Check for disconnection in CAN bus line between Common rail_J/C1 and Common rail_J/C2 (malfunction part 11)** |
|---|---|

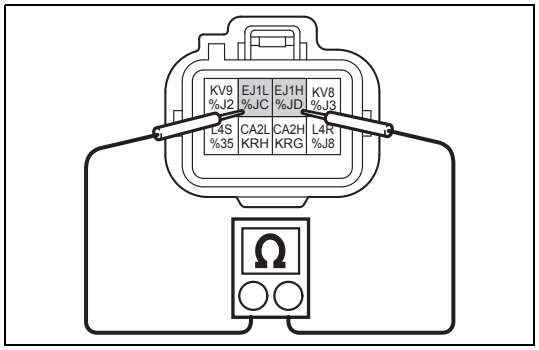

SAPH16ZZZ1100017

1. Disconnect the Common rail_J/C1 connector.

2. Use the electrical tester to measure the resistance between (EJ1H) terminal and (EJ1L) terminal at the Common rail_J/C1 connector. (Common rail_J/C2 side)

| Measurement conditions | Tester connections | Standard values |
|---|---|---|
| **Starter switch: LOCK** | **Common rail_J/C1 connector (Common rail_J/C2 side) EJ1H(CANH) – EJ1L(CANL)** | **110 Ω – 130 Ω** |

**Do the measurements meet the standard value?**

**YES**

**Connect the Common rail_J/C1 connector, and go to step 5.**

**NO**

**CAN bus line disconnection or poor continuity between Common rail_J/C1 and the Common rail_J/C2**
**Repair or replace the harness.**
**Perform After-inspection work. (Clear all past DTC. Check no DTC is stored after test drive.)**

| 5 | **Check for disconnection in CAN bus line between CAN-TMN6(terminating resistance) and Common rail_J/C1 (malfunction part 6)** |
|---|---|

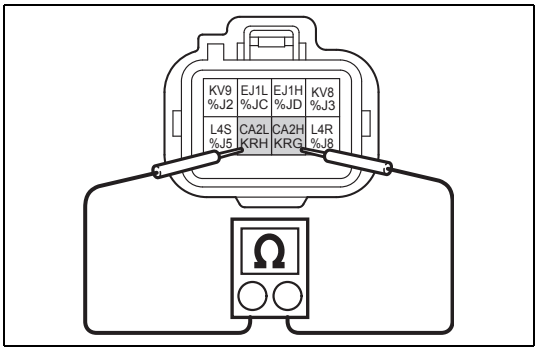


SAPH16ZZZ1100018

1. Disconnect the Common rail_J/C1 connector.
2. Use the electrical tester to measure the resistance between (CA2H) terminal and (CA2L) terminal at the Common rail_J/C1 connector. (Common rail_J/C2 side)

| Measurement conditions | Tester connections | Standard values |
|---|---|---|
| **Starter switch: LOCK** | **Common rail_J/C1 connector (Common rail_J/C2 side) CA2H(CANH) – CA2L(CANL)** | **110 Ω – 130 Ω** |

**Do the measurements meet the standard value?**

**YES**

**Connect the Common rail_J/C1 connector.**
**Procedure completed.**
**If another CAN communication system DTC is detected, refer to "CAN COMMUNICATION LINE MALFUNCTION PART DETERMINATION TABLE" , and inspect the detected DTC.**
**Perform After-inspection work. (Clear all past DTC. Check no DTC is stored after test drive.)**

**NO**

**CAN bus line disconnection or poor continuity between CAN-TMN6(terminating resistance) and the Common rail_J/C1**
**Repair or replace the harness.**
**Perform After-inspection work. (Clear all past DTC. Check no DTC is stored after test drive.)**

| 6 | Check for disconnection in CAN bus line between engine ECU and Common rail_J/C1 (malfunction part 7) |
|---|---|

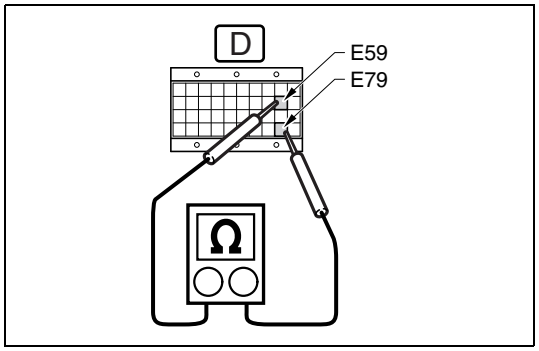


SAPH16ZZZ1100019

1. Disconnect the engine ECU connector (both 2 connectors).

2. Connect the signal check harness to the engine ECU vehicle-side connector. (Do not connect harness to the ECU)

**HINT**
**Refer to "PRECAUTIONS" in the chapter "ENGINE CONTROL SYSTEM (J08E)".**

3. Use the electrical tester to measure the resistance between (CANH) terminal and (CANL) terminal at the signal check harness. These circuits are identified as terminal E79 and terminal E59 on the signal check harness D.

| Measurement conditions | Tester connections | Standard values |
|---|---|---|
| Starter switch: LOCK | Signal check harness (Engine ECU) E59(CANH) – E79(CANL) | 110 Ω – 130 Ω |

**Do the measurements meet the standard value?**

**YES**

**Go to step 5.**

**NO**

**CAN bus line disconnection or poor continuity between engine ECU and Common rail_J/C1.**
**Repair or replace the harness.**
**Perform After-inspection work. (Clear all past DTC. Check no DTC is stored after test drive.)**

| 7 | **Check for disconnection in CAN bus line between engine ECU and CAN-TMN6 (terminating resistance) (malfunction part 6)** |
|---|---|

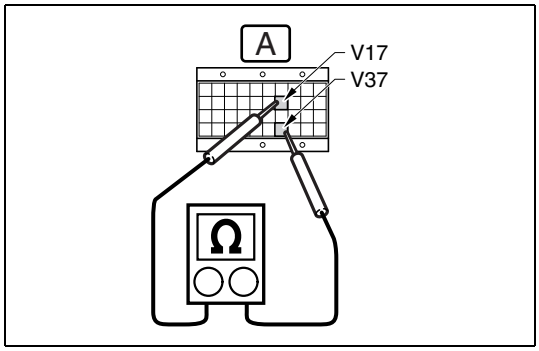


SAPH16ZZZ1100020

1. Use electrical tester to measure the resistance between (CA2L) terminal and (CA2H) terminal at the signal check harness. These circuits are identified as terminal V17 and terminal V37 on the signal check harness A.

| Measurement conditions | Tester connections | Standard values |
|---|---|---|
| **Starter switch: LOCK** | **Signal check harness (Engine ECU) V37(CA2H) – V17(CA2L)** | **110 Ω – 130 Ω** |

**Do the measurements meet the standard value?**

**YES**

**Procedure completed.**
**If another CAN communication system DTC is detected, refer to "CAN COMMUNICATION LINE MALFUNCTION PART DETERMINATION TABLE" , and inspect the detected DTC.**
**Perform After-inspection work. (Clear all past DTC. Check no DTC is stored after test drive.)**

**NO**

**CAN bus line disconnection or poor continuity between engine ECU and CAN-TMN6 (terminating resistance).**
**Repair or replace the harness.**
**Perform After-inspection work. (Clear all past DTC. Check no DTC is stored after test drive.)**

# INSPECTION FOR SHORT-CIRCUIT IN CAN H-LINE

EN01H16ZZZ110F03003006

| 1 | Check for short-circuit in CAN H-line between Common rail_CAN_J/C3 to DCU (malfunction part 10) |
|---|---|

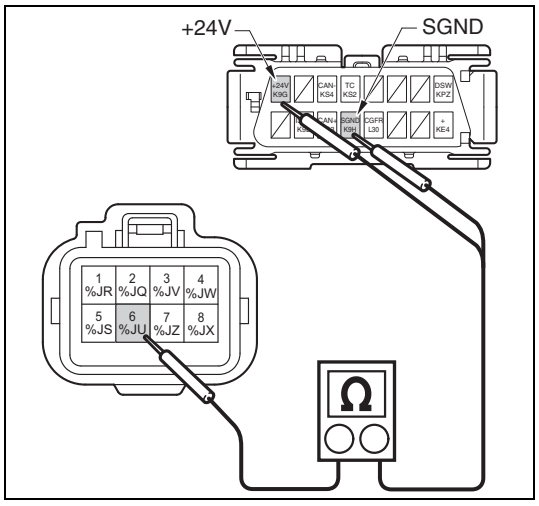


SAPH16ZZZ1100021

1. Set the starter switch to the "LOCK" position.
2. Disconnect the following sensors and controllers connected to the engine CAN line.
- DCU(53P)
- EGR controller, VNT controller
- NOx sensors 1 & 2, DEF sensor
- CAN-TMN6 (terminating resistance)
- PM sensor

3. Disconnect the Common rail_CAN_J/C3 connector.
4. Use the electrical tester to check the continuity between the following terminals.
   (1) Between the CAN H-line #6 terminal in the Common rail_CAN_J/C3, DCU side connector and the +24V(K9G) terminal in the DLC(16P) connector.
   (2) Between the CAN H-line #6 terminal in the Common rail_CAN_J/C3, DCU side connector and the SGND(K9H) terminal in the DLC(16P) connector.

| Measurement conditions | Tester connections | Standard values |
|---|---|---|
| Starter switch: LOCK | Common rail_CAN_J/C3 connector (DCU-side) – DLC(16P) connector #6(CANH) – +24V(K9G) #6(CANH) – SGND(K9H) | No Continuity |

**Do the measurements meet the standard value?**

**YES**

**Connect the Common rail_CAN_J/C3 and go to step 2.**

**NO**

**Short-circuit in CAN H-line +B/GND between Common rail_CAN_J/C3 and DCU.**
**Repair or replace the wire harness.**
**Perform After-inspection work. (Clear all past DTC. Check no DTC is stored after test drive.)**

| 2 | **Check for short-circuit in CAN H-line between Common rail_CAN_J/C1 and Common rail_CAN_J/C3 (malfunction part 9)** |
|---|---|

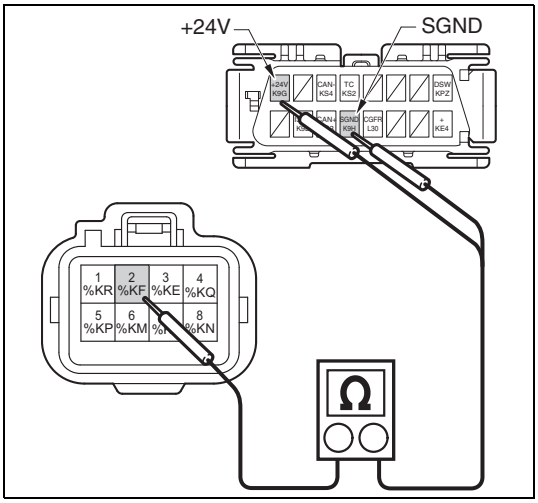

SAPH16ZZZ1100022

1. Disconnect the Common rail_CAN_J/C1 connector.

2. Use the electrical tester to check the continuity between the following terminals.
   (1) Between the CAN H-line #2 terminal in the Common rail_CAN_J/C1, Common rail_CAN_J/C3 side connector and the +24V(K9G) terminal in the DLC(16P) connector.
   (2) Between the CAN H-line #2 terminal in the Common rail_CAN_J/C1, Common rail_CAN_J/C3 side connector and the SGND(K9H) terminal in the DLC(16P) connector.

| Measurement conditions | Tester connections | Standard values |
|---|---|---|
| **Starter switch: LOCK** | **Common rail_CAN_J/C1 connector (Common rail_CAN_J/C3 side) – DLC(16P) connector #2(CANH) – +24V(K9G) #2(CANH) – SGND(K9H)** | **No Continuity** |

**Do the measurements meet the standard value?**

**YES**

**Connect the Common rail_CAN_J/C1 and go to step 3.**

**NO**

**Short-circuit in CAN L-line +B/GND between Common rail_CAN_J/C1 and Common rail_CAN_J/C3.**
**Repair or replace the wire harness.**
**Perform After-inspection work. (Clear all past DTC. Check no DTC is stored after test drive.)**

| 3 | Check for short-circuit in CAN H-line between Common rail_J/C2 and Common rail_CAN_J/C1 (malfunction part 8) |
|---|---|

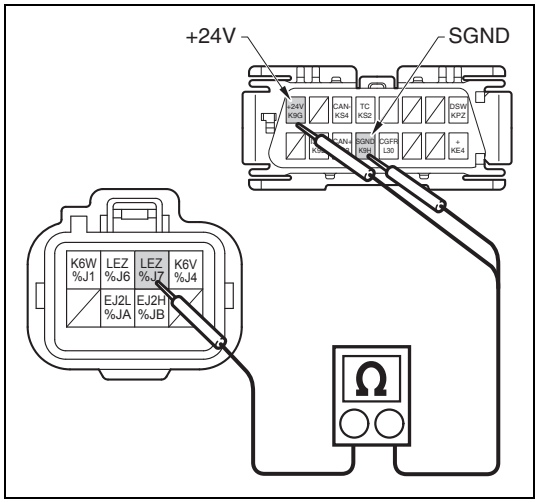

SAPH16ZZZ1100023

1. Disconnect the Common rail_J/C2 connector.
2. Use the electrical tester to check the continuity between the following terminals.
   (1) Between the CAN H-line LEY(CANH) terminal in the Common rail_J/C2, Common rail_CAN_J/C1 side connector and the +24V(K9G) terminal in the DLC(16P) connector.
   (2) Between the CAN H-line LEY(CANH) terminal in the Common rail_J/C2, Common rail_CAN_J/C1 side connector and the SGND(K9H) terminal in the DLC(16P) connector.

| Measurement conditions | Tester connections | Standard values |
|---|---|---|
| **Starter switch: LOCK** | **Common rail_J/C2 connector (Common rail_CAN_J/C1 side) – DLC(16P) connector<br>LEY(CANH) – +24V(K9G)<br>LEY(CANH) – SGND(K9H)** | **No Continuity** |

**Do the measurements meet the standard value?**

**YES**

**Connect the Common rail_J/C2 and go to step 4.**

**NO**

**Short-circuit in CAN H-line +B/GND between Common rail_J/C2 and Common rail_CAN_J/C1.**
**Repair or replace the wire harness.**
**Perform After-inspection work. (Clear all past DTC. Check no DTC is stored after test drive.)**

| 4 | **Check for short-circuit in CAN H-line between Common rail_J/C1 and Common rail_J/C2 (malfunction part 11)** |
|---|---|

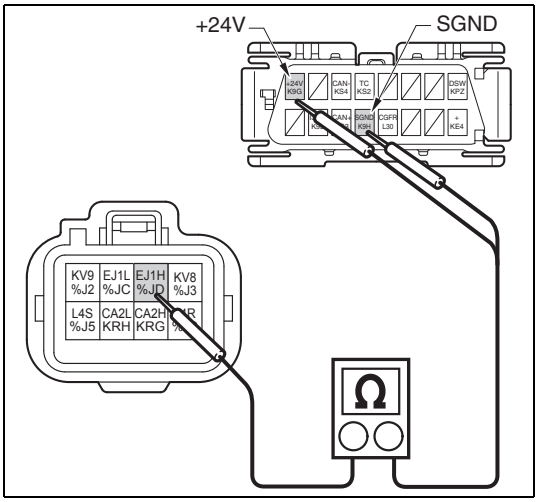

SAPH16ZZZ1100024

1. Disconnect the Common rail_J/C1 connector.

2. Use the electrical tester to check the continuity between the following terminals.
   (1) Between the CAN H-line EJ1H(CANH) terminal in the Common rail_J/C1, Common rail_J/C2 side connector and the +24V(K9G) terminal in the DLC(16P) connector.
   (2) Between the CAN H-line EJ1H(CANH) terminal in the Common rail_J/C1, Common rail_J/C2 side connector and the SGND(K9H) terminal in the DLC(16P) connector.

| Measurement conditions | Tester connections | Standard values |
|---|---|---|
| **Starter switch: LOCK** | **Common rail_J/C1 connector (Common rail_J/C2 side) – DLC(16P) connector EJ1H(CANH) – +24V(K9G) EJ1H(CANH) – SGND(K9H)** | **No Continuity** |

**Do the measurements meet the standard value?**

**YES**

**Connect the Common rail_J/C1 and go to step 5.**

**NO**

**Short-circuit in CAN H-line +B/GND between Common rail_J/C1 and Common rail_J/C2.**
**Repair or replace the wire harness.**
**Perform After-inspection work. (Clear all past DTC. Check no DTC is stored after test drive.)**

| 5 | Check for short-circuit in CAN H-line between engine ECU and Common rail_J/C1 (malfunction part 7) |
|---|---|

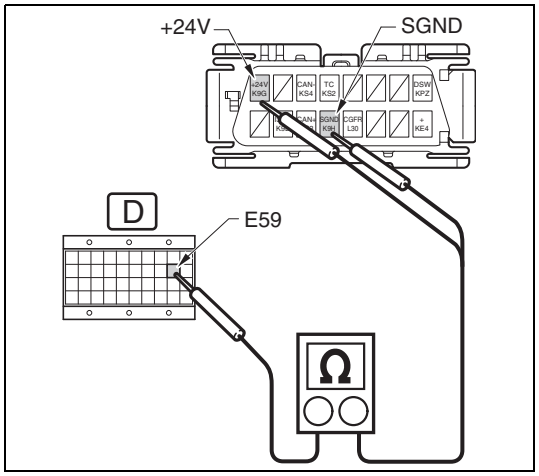

SAPH16ZZZ1100025

1. Disconnect the engine ECU.
2. Connect the signal check harness to the engine ECU vehicle-side connector (Do not connect harness to the ECU.)
3. Use the electrical tester to check the continuity between the following terminals.
   (1) Between the E59(CANH) terminal in the signal check harness and the +24V(K9G) terminal in the DLC(16P) connector.
   (2) Between the E59(CANH) terminal in the signal check harness and the SGND(K9H) terminal in the DLC(16P) connector.

| Measurement conditions | Tester connections | Standard values |
|---|---|---|
| **Starter switch: LOCK** | **Signal check harness (Engine ECU) – DLC(16P) connector E59(CANH) – +24V(K9G) E59(CANH) – SGND(K9H)** | **No Continuity** |

**Do the measurements meet the standard value?**

**YES**

**Go to step 5.**

**NO**

**Short-circuit in CAN H-line +B/GND between engine ECU and Common rail_J/C1.**
**Repair or replace the wire harness.**
**Perform After-inspection work. (Clear all past DTC. Check no DTC is stored after test drive.)**

| 6 | Check for short-circuit in CAN H-line between engine ECU and CAN-TMN6 (terminal resistance) (malfunction part 6) |
|---|---|

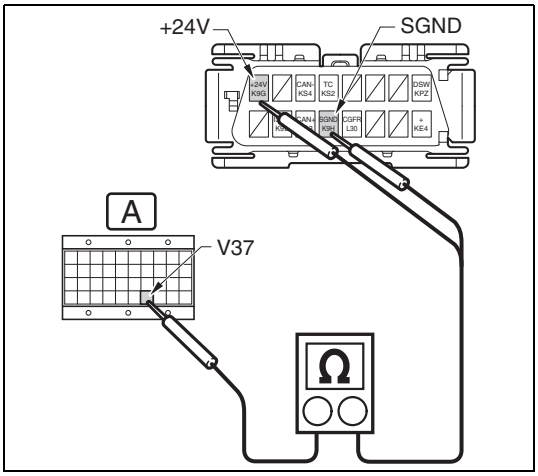

SAPH16ZZZ1100026

1. Use the electrical tester to check the continuity between the following terminals.
   (1) Between the V37(CA2H) terminal in the signal check harness and the +24V(K9G) terminal in the DLC(16P) connector.
   (2) Between the V37(CA2H) terminal in the signal check harness and the SGND(K9H) terminal in the DLC(16P) connector.

| Measurement conditions | Tester connections | Standard values |
|---|---|---|
| **Starter switch: LOCK** | **Signal check harness (Engine ECU) – DLC(16P) connector V37(CA2H) – +24V(K9G) V37(CA2H) – SGND(K9H)** | **No Continuity** |

**Do the measurements meet the standard value?**

**YES**

**Go to step 6.**

**NO**

**Short-circuit in CAN H-line +B/GND between engine ECU and CAN-TMN6 (terminal resistance).**
**Repair or replace the wire harness.**
**Perform After-inspection work. (Clear all past DTC. Check no DTC is stored after test drive.)**

| 7 | Inspect the EGR controller [HINO DX II ] |
|---|---|

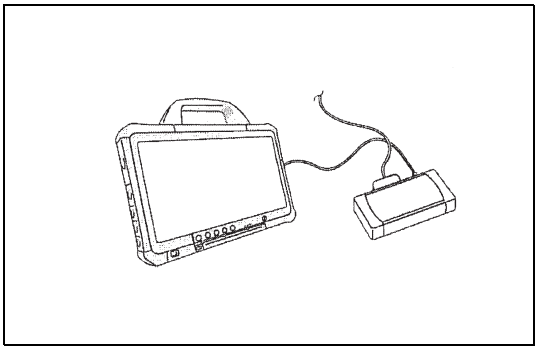
SAPH16ZZZ1100027

1. Set the starter switch to the "LOCK" position.
2. Connect the connector of the engine ECU.
3. Connect the vehicle to HINO DX II .
4. Set the starter switch to the "ON" position.
5. Erase the malfunction history and set the starter switch to the "LOCK" position.
6. Connect the EGR controller connector.
7. Set the starter switch to the "ON" position.
8. Check that the EGR controller communication failure (U010A) is not detected in HINO DX II menu.

**Did the EGR controller communication failure (U010A) disappear?**

**YES**

**Go to step 7.**

**NO**

**Inspect the EGR controller CAN communication line.**

| 8 | Inspect the VNT controller [HINO DX II ] |
|---|---|

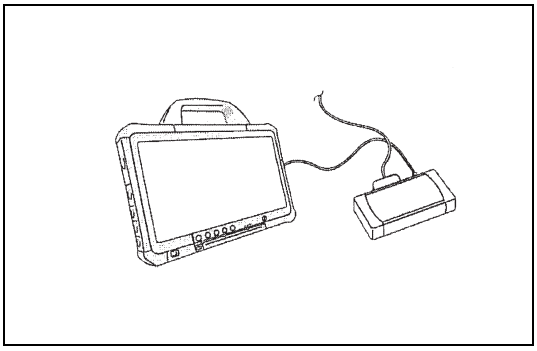

SAPH16ZZZ1100028

1. Erase the trouble history and set the starter switch to the "LOCK" position.
2. Connect the VNT controller connector.
3. Set the starter switch to the "ON" position.
4. Check that the VNT controller communication failure (U010C) is not detected in HINO DX II menu.

**Did the VNT controller communication failure (U010C) disappear?**

**YES**

**Go to step 8.**

**NO**

**Inspect the VNT controller CAN communication line.**

| 9 | NOx sensor 1 [HINO DX II ] |
|---|---|

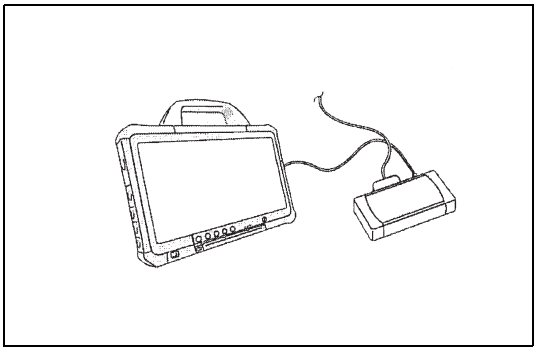

SAPH16ZZZ1100029

1. Erase the trouble history and set the starter switch to the "LOCK" position.
2. Connect the NOx sensor 1 connector.
3. Set the starter switch to the "ON" position.
4. Check that the NOx sensor 1 communication failure (U029D) is not detected in HINO DX II menu.

**Did the NOx sensor 1 communication failure (U029D) disappear?**

**YES**

**Go to step 9.**

**NO**

**Inspect the NOx sensor 1 CAN communication line.**

| 10 | Inspect the NOx sensor 2 [HINO DX II ] |
|---|---|

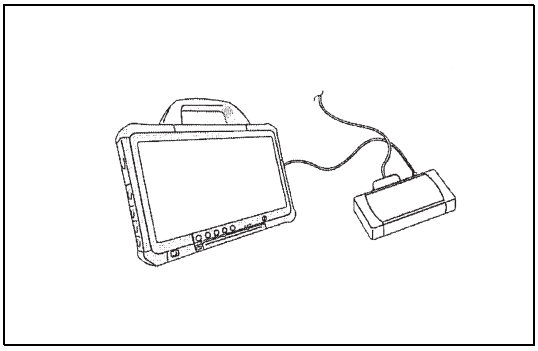

SAPH16ZZZ1100030

1. Erase the trouble history and set the starter switch to the "LOCK" position.
2. Connect the NOx sensor 2 connector.
3. Set the starter switch to the "ON" position.
4. Check that the NOx sensor 2 communication failure (U029E) is not detected in HINO DX II menu.

**Did the NOx sensor 2 communication failure (U029E) disappear?**

**YES**

**Go to step 10.**

**NO**

**Inspect the NOx sensor 2 CAN communication line.**

| 11 | Check the DEF sensor [HINO DX II ] |
|---|---|

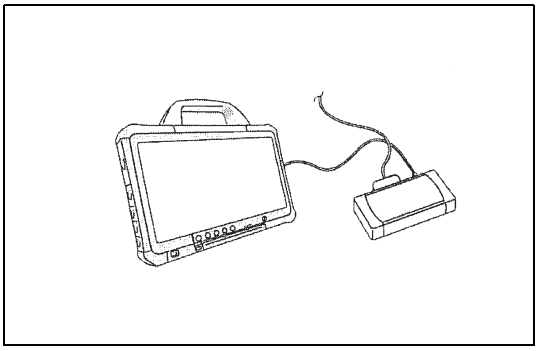

SAPH16ZZZ1100031

1. Erase the trouble history and set the starter switch to the "LOCK" position.
2. Disconnect the DEF sensor connector.
3. Set the starter switch to the "ON" position.
4. Check that the DEF sensor communication failure (U02A2) is not detected in HINO DX II menu.

**Did the DEF sensor communication failure (U02A2) disappear?**

**YES**

**Go to step 12.**

**NO**

**Inspect the DEF sensor CAN communication line**

| 12 | Check the PM sensor [HINO DX ll ] |
|---|---|

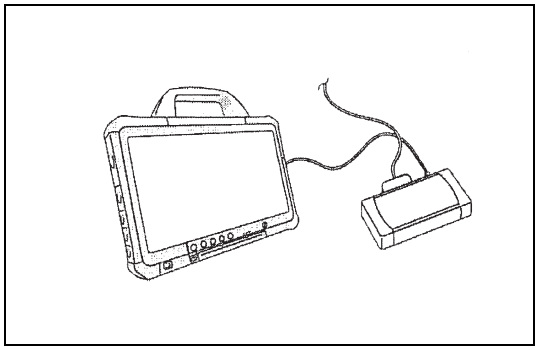

SAPH16ZZZ1100032

1. Erase the trouble history and set the starter switch to the "LOCK" position.
2. Disconnect the PM sensor connector.
3. Set the starter switch to the "ON" position.
4. Check that the PM sensor communication failure (U02A3) is not detected in HINO DX II menu.

**Did the PM sensor communication failure (U02A3) disappear?**

**YES**

**Procedure completed.**
**If another CAN communication system DTC is detected, refer to "CAN COMMUNICATION LINE MALFUNCTION PART DETERMINATION TABLE" , and inspect the detected DTC.**
**Perform After-inspection work. (Clear all past DTC. Check no DTC is stored after test drive.)**

**NO**

**Inspect the PM sensor CAN communication line**

# INSPECTION FOR SHORT-CIRCUIT IN CAN L-LINE

EN01H16ZZZ110F03003007

| 1 | Check for short-circuit in CAN L-line between Common rail_CAN_J/C3 to DCU (malfunction part 10) |
|---|---|

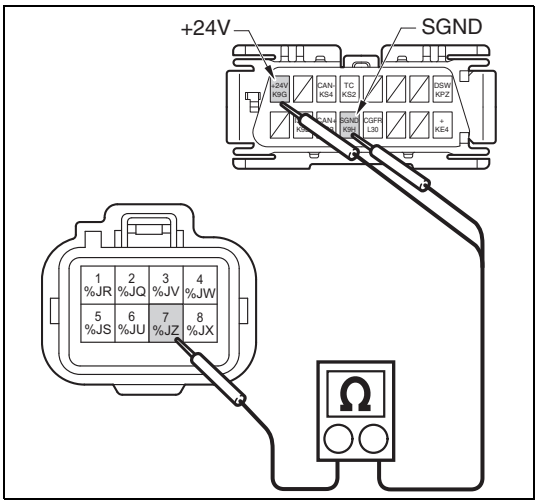


SAPH16ZZZ1100033

1. Set the starter switch to the "LOCK" position.

2. Disconnect the following sensors and controllers connected to the Engine CAN line.
- DCU(53P)
- EGR controller, VNT controller
- NOx sensors 1 & 2, DEF sensor
- CAN-TMN6 (terminating resistance)
- PM sensor

3. Disconnect the Common rail_CAN_J/C3 connector.

4. Use the electrical tester to check the continuity between the following terminals.
   (1) Between the CAN L-line #7 terminal in the Common rail_CAN_J/C3, DCU side connector and the +24V(K9G) terminal in the DLC(16P) connector.
   (2) Between the CAN L-line #7 terminal in the Common rail_CAN_J/C3, DCU side connector and the SGND(K9H) terminal in the DLC(16P) connector.

| Measurement conditions | Tester connections | Standard values |
|---|---|---|
| **Starter switch: LOCK** | **Common rail_CAN_J/C3 connector (DCU-side) – DLC(16P) connector #7(CANL) – +24V(K9G) #7(CANL) – SGND(K9H)** | **No Continuity** |

**Do the measurements meet the standard value?**

**YES**

**Connect the Common rail_CAN_J/C3 and go to step 2.**

**NO**

**Short-circuit in CAN L-line +B/GND between Common rail_CAN_J/C3 and DCU.**
**Repair or replace the wire harness.**
**Perform After-inspection work. (Clear all past DTC. Check no DTC is stored after test drive.)**

| 2 | Check for short-circuit in CAN L-line between Common rail_CAN_J/C1 and Common rail_CAN_J/C3 (malfunction part 9) |
|---|---|

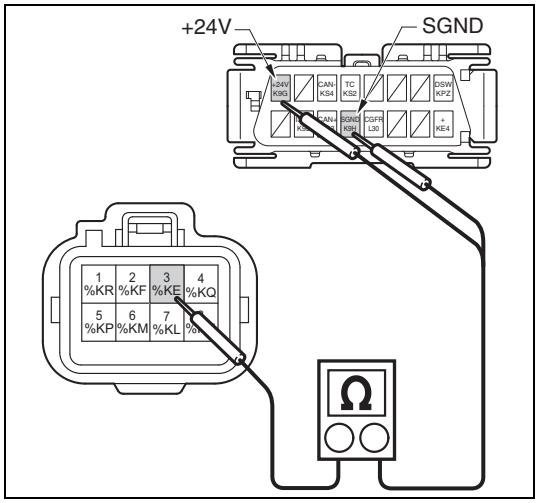

SAPH16ZZZ1100034

1. Disconnect the Common rail_CAN_J/C1 connector.

2. Use the electrical tester to check the continuity between the following terminals.
   (1) Between the CAN L-line #3 terminal in the Common rail_CAN_J/C1, J/C3 side connector and the +24V(K9G) terminal in the DLC(16P) connector.
   (2) Between the CAN L-line #3 terminal in the Common rail_CAN_J/C1, J/C3 side connector and the SGND(K9H) terminal in the DLC(16P) connector.

| Measurement conditions | Tester connections | Standard values |
|---|---|---|
| Starter switch: LOCK | Common rail_CAN_J/C1 connector (Common rail_CAN_J/C3 side) – DLC(16P) connector #3(CANL) – +24V(K9G) #3(CANL) – SGND(K9H) | No Continuity |

**Do the measurements meet the standard value?**

**YES**

**Connect the Common rail_CAN_J/C1 and go to step 3.**

**NO**

**Short-circuit in CAN L-line +B/GND between Common rail_CAN_J/C1 and Common rail_CAN_J/C3.**
**Repair or replace the wire harness.**
**Perform After-inspection work. (Clear all past DTC. Check no DTC is stored after test drive.)**

| 3 | Check for short-circuit in CAN L-line between Common rail_J/C2 and Common rail_CAN_J/C1 (malfunction part 8) |
|---|---|

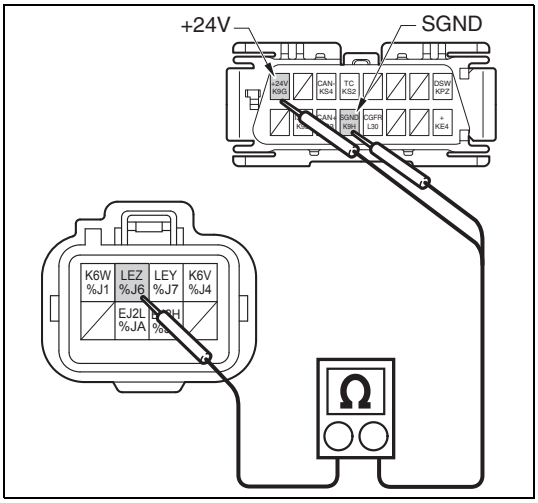

SAPH16ZZZ1100035

1. Disconnect the Common rail_J/C2 connector.
2. Use the electrical tester to check the continuity between the following terminals.
   (1) Between the CAN L-line LEZ(CANL) terminal in the Common rail_J/C2, J/C1 side connector and the +24V(K9G) terminal in the DLC(16P) connector.
   (2) Between the CAN L-line LEZ(CANL) terminal in the Common rail_J/C2, J/C1 side connector and the SGND(K9H) terminal in the DLC(16P) connector.

| Measurement conditions | Tester connections | Standard values |
|---|---|---|
| **Starter switch: LOCK** | **Common rail_J/C2 connector (Common rail_CAN_J/C1 side) – DLC(16P) connector LEZ(CANL) – +24V(K9G) LEZ(CANL) – SGND(K9H)** | **No Continuity** |

**Do the measurements meet the standard value?**

**YES**

**Connect the Common rail_J/C2 and go to step 4.**

**NO**

**Short-circuit in CAN L-line +B/GND between Common rail_J/C2 and Common rail_CAN_J/C1.**
**Repair or replace the wire harness.**
**Perform After-inspection work. (Clear all past DTC. Check no DTC is stored after test drive.)**

| 4 | Check for short-circuit in CAN L-line between Common rail_J/C1 and Common rail_J/C2 (malfunction part 11) |
|---|---|

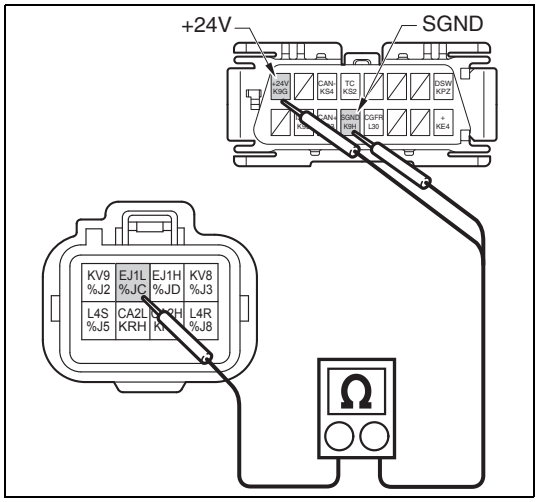

SAPH16ZZZ1100036

1. Disconnect the Common rail_J/C1 connector.

2. Use the electrical tester to check the continuity between the following terminals.
   (1) Between the CAN L-line EJ1L(CANL) terminal in the Common rail_J/C1, J/C4 side connector and the +24V(K9G) terminal in the DLC(16P) connector.
   (2) Between the CAN L-line EJ1L(CANL) terminal in the Common rail_J/C1, J/C1 side connector and the SGND(K9H) terminal in the DLC(16P) connector.

| Measurement conditions | Tester connections | Standard values |
|---|---|---|
| **Starter switch: LOCK** | **Common rail_J/C1 connector (Common rail_J/C2 side) – DLC(16P) connector EJ1L(CANL) – +24V(K9G) EJ1L(CANL) – SGND(K9H)** | **No Continuity** |

**Do the measurements meet the standard value?**

**YES**

**Connect the Common rail_J/C1 and go to step 5.**

**NO**

**Short-circuit in CAN L-line +B/GND between Common rail_J/C1 and Common rail_J/C2.**
**Repair or replace the wire harness.**
**Perform After-inspection work. (Clear all past DTC. Check no DTC is stored after test drive.)**

| 5 | Check for short-circuit in CAN L-line between engine ECU and Common rail_J/C1 (malfunction part 7) |
|---|---|

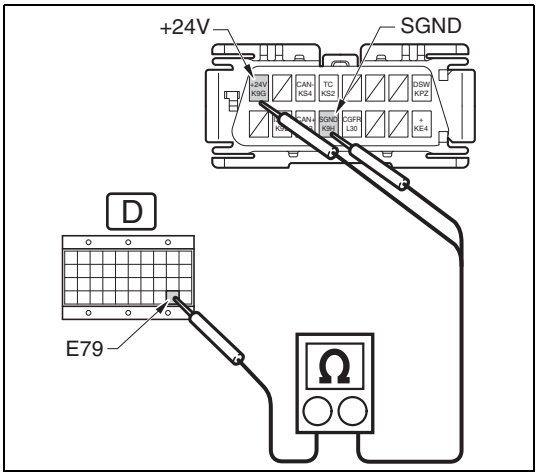

SAPH16ZZZ1100037

1. Disconnect the engine ECU.
2. Connect the signal check harness to the engine ECU vehicle-side connector (Do not connect harness to the ECU.)
3. Use the electrical tester to check the continuity between the following terminals.
   (1) Between the E79(CANL) terminal in the signal check harness and the +24V(K9G) terminal in the DLC(16P) connector.
   (2) Between the E79(CANL) terminal in the signal check harness and the SGND(K9H) terminal in the DLC(16P) connector.

| Measurement conditions | Tester connections | Standard values |
|---|---|---|
| Starter switch: LOCK | Signal check harness (Engine ECU) – DLC(16P) connector<br>E79(CANL) – +24V(K9G)<br>E79(CANL) – SGND(K9H) | No Continuity |

**Do the measurements meet the standard value?**

**YES**

**Go to step 5.**

**NO**

**Short-circuit in CAN L-line +B/GND between engine ECU and Common rail_J/C1.**
**Repair or replace the wire harness.**
**Perform After-inspection work. (Clear all past DTC. Check no DTC is stored after test drive.)**

| 6 | Check for short-circuit in CAN L-line between engine ECU and CAN-TMN6 (terminal resistance) (malfunction part 6) |
|---|---|

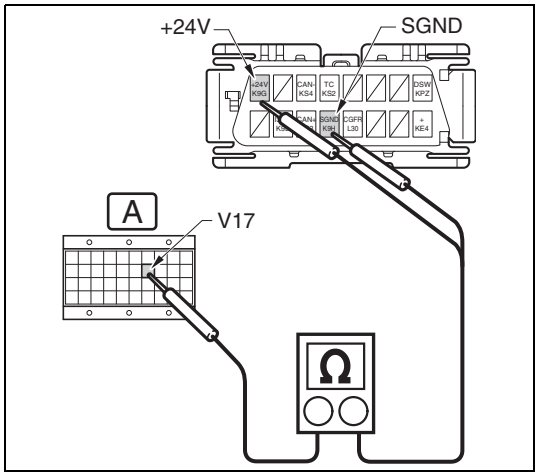

SAPH16ZZZ1100038

1. Use the electrical tester to check the continuity between the following terminals.
   (1) Between the V17(CA2L) terminal in the signal check harness and the +24V(K9G) terminal in the DLC(16P) connector.
   (2) Between the V17(CA2L) terminal in the signal check harness and the SGND(K9H) terminal in the DLC(16P) connector.

| Measurement conditions | Tester connections | Standard values |
|---|---|---|
| **Starter switch: LOCK** | **Signal check harness (Engine ECU) – DLC(16P) connector V17(CA2L) – +24V(K9G) V17(CA2L) – SGND(K9H)** | **No Continuity** |

**Do the measurements meet the standard value?**

**YES**

**Go to step 6.**

**NO**

**Short-circuit in CAN L-line +B/GND between engine ECU and CAN-TMN6 (terminal resistance).**
**Repair or replace the wire harness.**
**Perform After-inspection work. (Clear all past DTC. Check no DTC is stored after test drive.)**

| 7 | Inspect the EGR controller [HINO DX II ] |
|---|---|

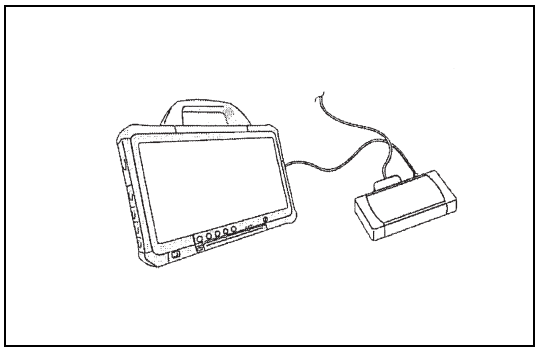
SAPH16ZZZ1100039

1. Set the starter switch to the "LOCK" position.
2. Connect the connector of the engine ECU.
3. Connect the vehicle to HINO DX II .
4. Set the starter switch to the "ON" position.
5. Erase the malfunction history and set the starter switch to the "LOCK" position.
6. Connect the EGR controller connector.
7. Set the starter switch to the "ON" position.
8. Check that the EGR controller communication failure (U010A) is not detected in HINO DX II menu.

**Did the EGR controller communication failure (U010A) disappear?**

**YES**

**Go to step 7.**

**NO**

**Inspect the EGR controller CAN communication line.**

## 8 Inspect the VNT controller [HINO DX II ]

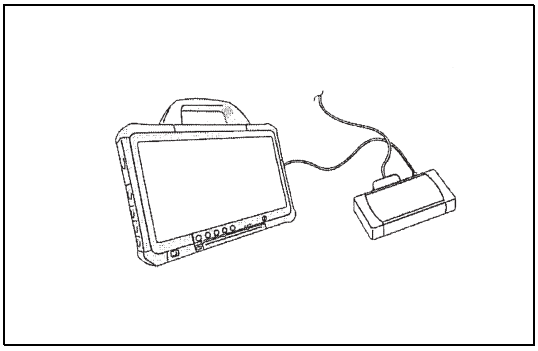

SAPH16ZZZ1100040

1. Erase the trouble history and set the starter switch to the "LOCK" position.
2. Connect the VNT controller connector.
3. Set the starter switch to the "ON" position.
4. Check that the VNT controller communication failure (U010C) is not detected in HINO DX II menu.

**Did the VNT controller communication failure (U010C) disappear?**

**YES**

**Go to step 8.**

**NO**

**Inspect the VNT controller CAN communication line.**

## 9 NOx sensor 1 [HINO DX II ]

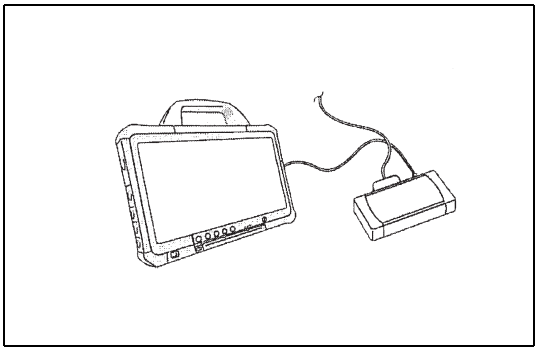

SAPH16ZZZ1100041

1. Erase the trouble history and set the starter switch to the "LOCK" position.
2. Connect the NOx sensor 1 connector.
3. Set the starter switch to the "ON" position.
4. Check that the NOx sensor 1 communication failure (U029D) is not detected in HINO DX II menu.

**Did the NOx sensor 1 communication failure (U029D) disappear?**

**YES**

**Go to step 9.**

**NO**

**Inspect the NOx sensor 1 CAN communication line.**

| 10 | Inspect the NOx sensor 2 [HINO DX II ] |
|---|---|

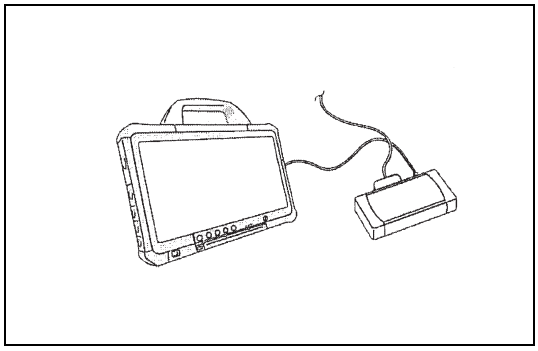

SAPH16ZZZ1100042

1. Erase the trouble history and set the starter switch to the "LOCK" position.
2. Connect the NOx sensor 2 connector.
3. Set the starter switch to the "ON" position.
4. Check that the NOx sensor 2 communication failure (U029E) is not detected in HINO DX II menu.

**Did the NOx sensor 2 communication failure (U029E) disappear?**

**YES**

**Go to step 10.**

**NO**

**Inspect the NOx sensor 2 CAN communication line.**

| 11 | Check the DEF sensor [HINO DX II ] |
|---|---|

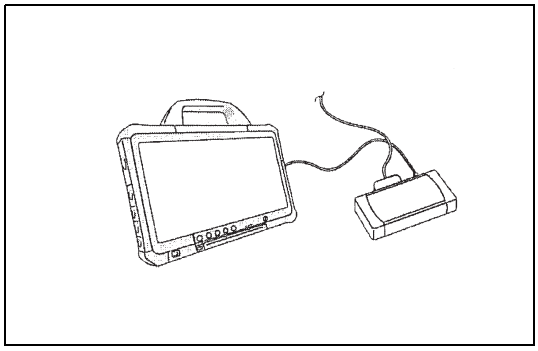

SAPH16ZZZ1100043

1. Erase the trouble history and set the starter switch to the "LOCK" position.
2. Disconnect the DEF sensor connector.
3. Set the starter switch to the "ON" position.
4. Check that the DEF sensor communication failure (U02A2) is not detected in HINO DX II menu.

**Did the DEF sensor communication failure (U02A2) disappear?**

**YES**

**Go to step 12.**

**NO**

**Inspect the DEF sensor CAN communication line**

| 12 | Check the PM sensor [HINO DX II ] |
|---|---|

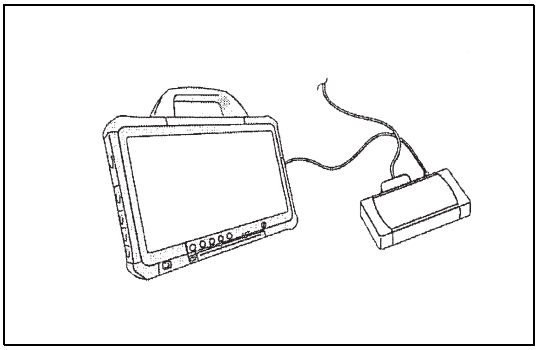

SAPH16ZZZ1100044

1. Erase the trouble history and set the starter switch to the "LOCK" position.
2. Disconnect the PM sensor connector.
3. Set the starter switch to the "ON" position.
4. Check that the PM sensor communication failure (U02A3) is not detected in HINO DX II menu.

**Did the PM sensor communication failure (U02A3) disappear?**

**YES**

**Procedure completed.**
**If another CAN communication system DTC is detected, refer to "CAN COMMUNICATION LINE MALFUNCTION PART DETERMINATION TABLE" , and inspect the detected DTC. Perform After-inspection work. (Clear all past DTC. Check no DTC is stored after test drive.)**

**NO**

**Inspect the PM sensor CAN communication line**

# INSPECTION FOR EGR CONTROLLER CAN COMMUNICATION LINE

EN01H16ZZZ110F03003008

| 1 | Inspect the connector |
|---|---|

1. Check the installation of the joint connector Common rail_J/C1 and EGR controller connector (Looseness and poor contact).

**Was any failure found?**

| YES | NO |
|---|---|
| Repair or replace the faulty part, and go to step 2. | Connect securely, and go to step 2. |

| 2 | Check the DTC detected [HINO DX II ] |
|---|---|

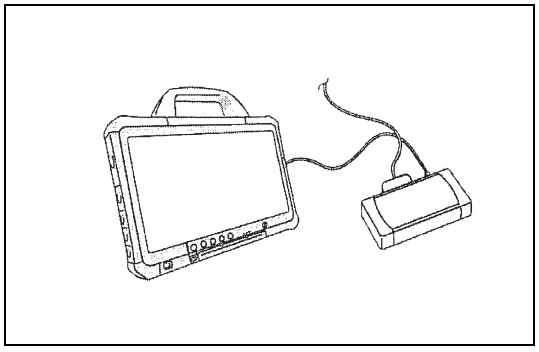

SAPH16ZZZ1100045

1. Set the starter switch to the "ON" position.
2. Select [Engine] and check if U010A has been detected.

**Has DTC U010A been detected?**

| YES | NO |
|---|---|
| Go to step 3. | Procedure completed.<br>Perform After-inspection work. (Clear all past DTC. Check no DTC is stored after test drive.) |

| 3 | Check for disconnection in CAN H-line between Common rail_J/C1 and EGR controller (malfunction part 1) |
|---|---|

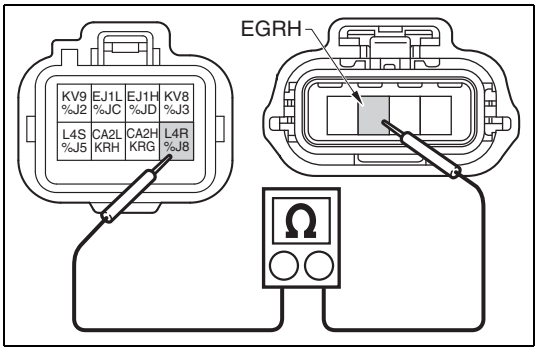

SAPH16ZZZ1100046

1. Set the starter switch to the "LOCK" position.
2. Disconnect the Common rail_J/C1 and EGR controller connector.
3. Use the electrical tester to measure the resistance between the Common rail_J/C1 L4R terminal and the EGRH terminal in the EGR controller vehicle-side connector.

| Measurement conditions | Tester connections | Standard values |
|---|---|---|
| Starter switch: LOCK | Common rail_J/C1 – EGR controller vehicle-side connector L4R – EGRH | 1 Ω or less |

**Do the measurements meet the standard value?**

**YES**

**Go to step 4.**

**NO**

**Disconnection or faulty continuity in CAN H-line between Common rail_J/C1 and EGR controller.**
**Repair or replace the harness.**
**Perform After-inspection work. (Clear all past DTC. Check no DTC is stored after test drive.)**

| 4 | Check for disconnection in CAN L-line between Common rail_J/C1 and EGR controller (malfunction part 1) |
|---|---|

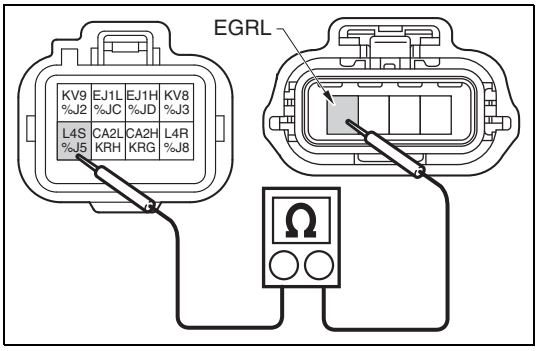

SAPH16ZZZ1100047

1. Use the electrical tester to measure the resistance between the Common rail_J/C1 L4S terminal and the EGRL terminal in the EGR controller vehicle-side connector.

| Measurement conditions | Tester connections | Standard values |
|---|---|---|
| Starter switch: LOCK | Common rail_J/C1 – EGR controller vehicle-side connector L4S – EGRL | 1 Ω or less |

**Do the measurements meet the standard value?**

| YES | NO |
|---|---|
| **Go to step 5.** | **Disconnection or faulty continuity in CAN L-line between Common rail_J/C1 and EGR controller.<br>Repair or replace the harness.<br>Perform After-inspection work. (Clear all past DTC. Check no DTC is stored after test drive.)** |

| 5 | **Check for short-circuit in CAN H-line between Common rail_J/C1 and EGR controller (malfunction part 1)** |
|---|---|

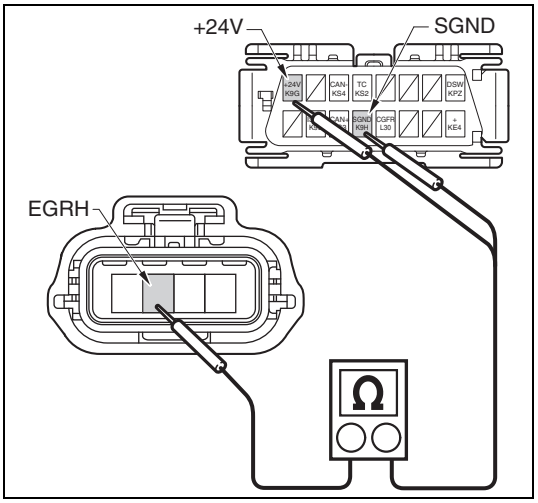

SAPH16ZZZ1100048

1. Use the electrical tester to check the continuity between the following terminals.
   (1) Between the EGRH terminal in the EGR controller vehicle-side connector and the +24V(K9G) terminal in the DLC(16P) connector.
   (2) Between the EGRH terminal in the EGR controller vehicle-side connector and the SGND(K9H) terminal in the DLC(16P) connector.

| Measurement conditions | Tester connections | Standard values |
|---|---|---|
| **Starter switch: LOCK** | **EGR controller vehicle-side connector – DLC(16P) connector<br>EGRH – +24V(K9G)<br>EGRH – SGND(K9H)** | **No Continuity** |

**Do the measurements meet the standard value?**

| YES | NO |
|---|---|
| **Go to step 6.** | **Short-circuit in CAN H-line +B/GND between CAN Common rail_J/C1 and EGR controller.<br>Repair or replace the wire harness.<br>Perform After-inspection work. (Clear all past DTC. Check no DTC is stored after test drive.)** |

| 6 | Check for +B/GND short-circuit in CAN L-line |
|---|---|

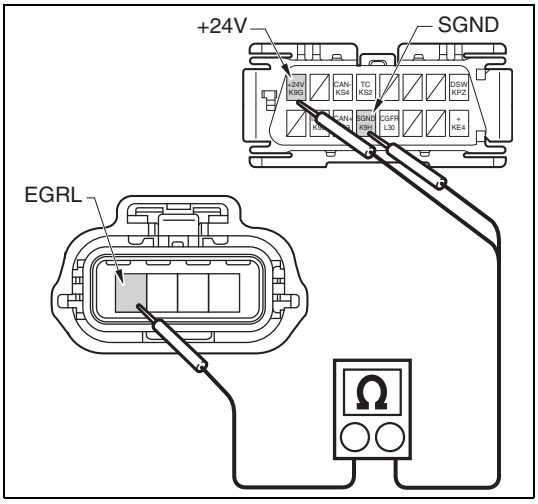

SAPH16ZZZ1100049

1. Use the electrical tester to check the continuity between the following terminals.
   (1) Between the EGRL terminal in the EGR controller vehicle-side connector and the +24V(K9G) terminal in the DLC(16P) connector.
   (2) Between the EGRL terminal in the EGR controller vehicle-side connector and the SGND(K9H) terminal in the DLC(16P) connector.

| Measurement conditions | Tester connections | Standard values |
|---|---|---|
| **Starter switch: LOCK** | **EGR controller vehicle-side connector – DLC(16P) connector EGRL – +24V(K9G) EGRL – SGND(K9H)** | **No Continuity** |

**Do the measurements meet the standard value?**

**YES**

**Go to step 7.**

**NO**

**Short-circuit in CAN L-line +B/GND between CAN Common rail_J/C1 and EGR controller. Repair or replace the wire harness. Perform After-inspection work. (Clear all past DTC. Check no DTC is stored after test drive.)**

| 7 | Inspect the EGR controller [HINO DX ll ] |
|---|---|

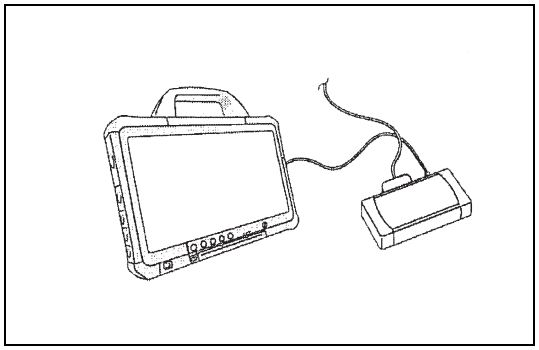

SAPH16ZZZ1100050

1. Connect the Common rail_J/C1 and EGR controller connector.
2. Set the starter switch to the "ON" position.
3. Select [Engine] and check if U010A has been detected.

**Has DTC U010A been detected?**

**YES**

**Replace the EGR controller.**
**Perform After-inspection work. (Clear all past DTC. Check no DTC is stored after test drive.)**

**NO**

**Procedure completed.**
**Perform After-inspection work. (Clear all past DTC. Check no DTC is stored after test drive.)**

# INSPECTION FOR VNT CONTROLLER CAN COMMUNICATION LINE

EN01H16ZZZ110F03003009

| 1 | Inspect the connector |
|---|---|

1. Check the connection of the joint connector Common rail_J/C1 and VNT controller connector (Looseness and poor contact).

**Was any failure found?**

| YES | NO |
|---|---|
| **Repair or replace the faulty part, and go to step 2.** | **Connect securely, and go to step 2.** |

| 2 | Check the DTC detected [HINO DX II ] |
|---|---|

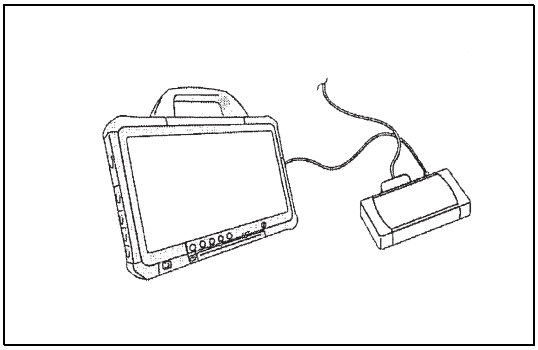

SAPH16ZZZ1100051

1. Set the starter switch to the "ON" position.
2. Select [Engine] and check if U010C has been detected.

**Has DTC U010C been detected?**

| YES | NO |
|---|---|
| **Go to step 3.** | **Procedure completed.**<br>**Perform After-inspection work. (Clear all past DTC. Check no DTC is stored after test drive.)** |

| 3 | Check for disconnection in CAN H-line between Common rail_J/C1 and VNT controller (malfunction part 2) |
|---|---|

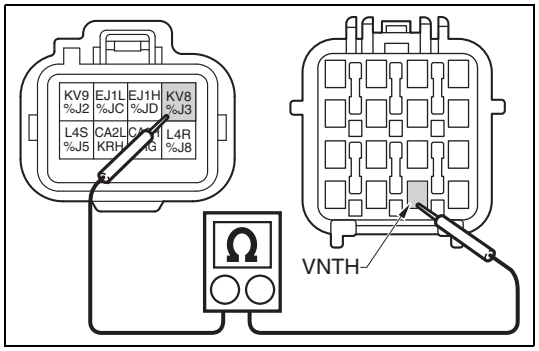

SAPH16ZZZ1100052

1. Set the starter switch to the "LOCK" position.
2. Disconnect the Common rail_J/C1 and VNT controller connector.
3. Use the electrical tester to measure the resistance between the Common rail_J/C1 KV8 terminal and VNTH terminal in the VNT controller vehicle-side connector.

| Measurement conditions | Tester connections | Standard values |
|---|---|---|
| Starter switch: LOCK | Common rail_J/C1 – VNT controller vehicle-side connector KV8 – VNTH | 1 Ω or less |

**Do the measurements meet the standard value?**

**YES**

**Go to step 4.**

**NO**

**Disconnection or faulty continuity in CAN H-line between Common rail_J/C1 and VNT controller.**
**Repair or replace the harness.**
**Perform After-inspection work. (Clear all past DTC. Check no DTC is stored after test drive.)**

| 4 | Check for disconnection in CAN L-line between Common rail_J/C1 and VNT controller (malfunction part 2) |
|---|---|

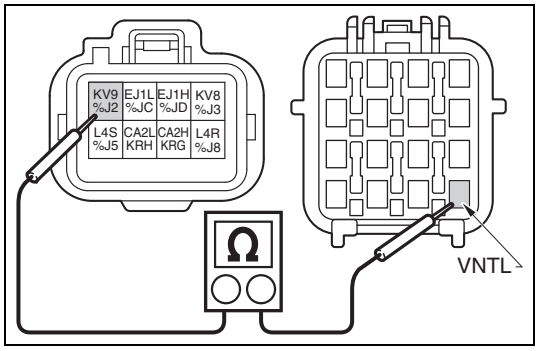

SAPH16ZZZ1100053

1. Use the electrical tester to measure the resistance between the Common rail_J/C1 KV9 terminal and VNTL terminal in the VNT controller vehicle-side connector.

| Measurement conditions | Tester connections | Standard values |
|---|---|---|
| Starter switch: LOCK | Common rail_J/C1 – VNT controller vehicle-side connector KV9 – VNTL | 1 Ω or less |

**Do the measurements meet the standard value?**

**YES**

**Go to step 5.**

**NO**

**Disconnection or faulty continuity in CAN L-line between Common rail_J/C1 and VNT controller.**
**Repair or replace the harness.**
**Perform After-inspection work. (Clear all past DTC. Check no DTC is stored after test drive.)**

| 5 | **Check for short-circuit in CAN H-line between Common rail_J/C1 and VNT controller (malfunction part 2)** |
|---|---|

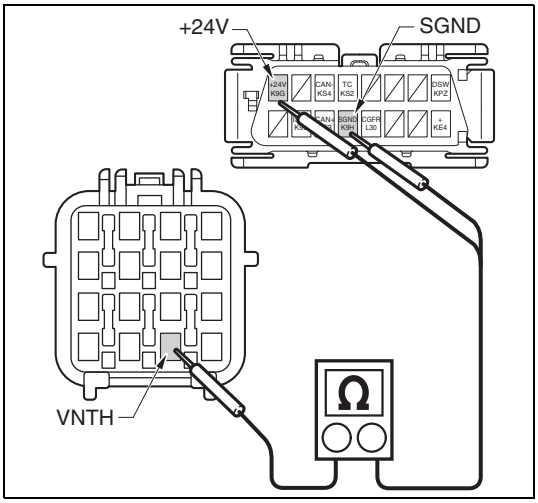

SAPH16ZZZ1100054

1. Use the electrical tester to check the continuity between the following terminals.
   (1) Between the VNTH terminal in the VNT controller vehicle-side connector and the +24V(K9G) terminal in the DLC(16P) connector.
   (2) Between the VNTH terminal in the VNT controller vehicle-side connector and the SGND(K9H) terminal in the DLC(16P) connector.

| Measurement conditions | Tester connections | Standard values |
|---|---|---|
| **Starter switch: LOCK** | **VNT controller vehicle-side connector – DLC(16P) connector VNTH – +24V(K9G) VNTH – SGND(K9H)** | **No Continuity** |

**Do the measurements meet the standard value?**

**YES**

**Go to step 6.**

**NO**

**Short-circuit in CAN H-line +B/GND between CAN Common rail_J/C1 and VNT controller.**
**Repair or replace the wire harness.**
**Perform After-inspection work. (Clear all past DTC. Check no DTC is stored after test drive.)**

| 6 | Check for short-circuit in CAN L-line between Common rail_J/C1 and VNT controller (malfunction part 2) |
|---|---|

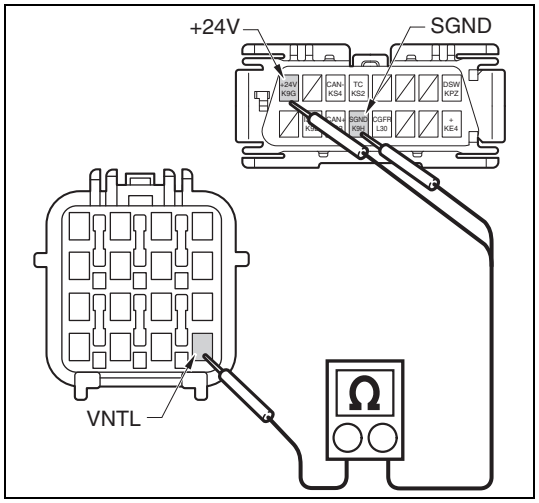

SAPH16ZZZ1100055

1. Use the electrical tester to check the continuity between the following terminals.
   (1) Between the VNTL terminal in the VNT controller vehicle-side connector and the +24V(K9G) terminal in the DLC(16P) connector.
   (2) Between the VNTL terminal in the VNT controller vehicle-side connector and the SGND(K9H) terminal in the DLC(16P) connector.

| Measurement conditions | Tester connections | Standard values |
|---|---|---|
| **Starter switch: LOCK** | **VNT controller vehicle-side connector – DLC(16P) connector<br>VNTL – +24V(K9G)<br>VNTL – SGND(K9H)** | **No Continuity** |

**Do the measurements meet the standard value?**

**YES**

**Go to step 7.**

**NO**

**Short-circuit in CAN L-line +B/GND between CAN Common rail_J/C1 and VNT controller.**
**Repair or replace the wire harness.**
**Perform After-inspection work. (Clear all past DTC. Check no DTC is stored after test drive.)**

| 7 | Inspect the VNT controller [HINO DX ll ] |
|---|---|

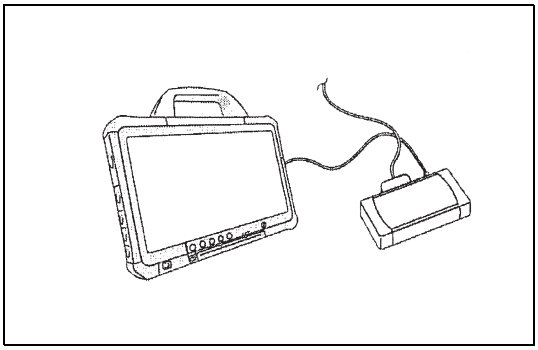

SAPH16ZZZ1100056

1. Connect the Common rail_J/C1 and VNT controller connector.
2. Set the starter switch to the "ON" position.
3. Select [Engine] and check if U010C has been detected.

**Has DTC U010C been detected?**

**YES**

**Replace the VNT controller.**
**Perform After-inspection work. (Clear all past DTC. Check no DTC is stored after test drive.)**

**NO**

**Procedure completed.**
**Perform After-inspection work. (Clear all past DTC. Check no DTC is stored after test drive.)**

# INSPECTION FOR DCU CAN COMMUNICATION LINE (ENGINE CAN COMMUNICATION LINE)

EN01H16ZZZ110F03003010

| 1 | Inspect the connector |
|---|---|

1. Check the connection of the joint connector Common rail_CAN_J/C3 and DCU connector (Looseness and poor contact).

**Was any failure found?**

| YES | NO |
|---|---|
| **Repair or replace the faulty part, and go to step 2.** | **Connect securely, and go to step 2.** |

| 2 | Check the DTC detected [HINO DX II ] |
|---|---|

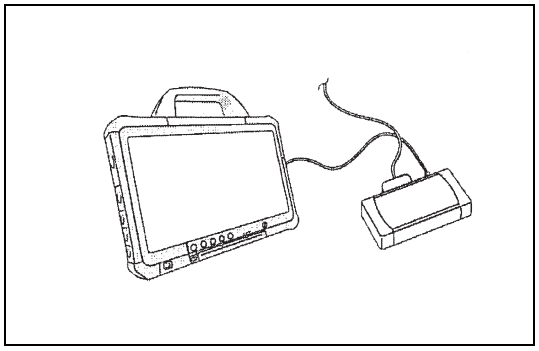

SAPH16ZZZ1100057

1. Set the starter switch to the "ON" position.
2. Select [Engine] and check if U010E has been detected.
3. Select [DCU] and check if U0029 has been detected

**Has DTC U010E or U0029 been detected?**

| YES | NO |
|---|---|
| **Go to step 3.** | **Procedure completed.**<br>**Perform After-inspection work. (Clear all past DTC. Check no DTC is stored after test drive.)** |

| 3 | **Check harness in CAN H-line between Common rail_CAN_J/C3 and DCU (malfunction part 10)** |
|---|---|

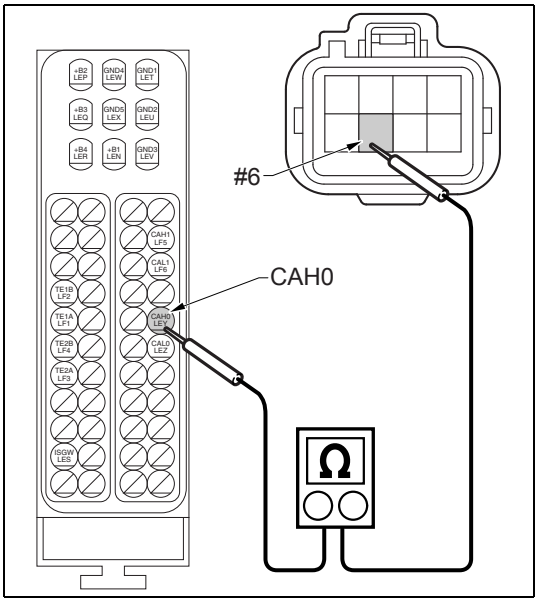


SAPH16ZZZ1100058

1. Set the starter switch to the "LOCK" position.
2. Disconnect the Common rail_CAN_J/C3 and DCU(53P) connector.
3. Use the electrical tester to measure the resistance between the Common rail_CAN_J/C3 #6 terminal and the DCU vehicle-side connector(53P) CAH0 terminal.

| Measurement conditions | Tester connections | Standard values |
|---|---|---|
| **Starter switch: LOCK** | **Common rail_CAN_J/C3 – DCU vehicle-side connector(53P) #6 – CAH0** | **1 Ω or less** |

**Do the measurements meet the standard value?**

**YES**

**Go to step 4.**

**NO**

**Disconnection or faulty continuity in CAN H-line between Common rail_CAN_J/C3 and DCU.**
**Repair or replace the harness.**
**Perform After-inspection work. (Clear all past DTC. Check no DTC is stored after test drive.)**

| 4 | Check harness in CAN L-line between Common rail_CAN_J/C3 and DCU (malfunction part 10) |
|---|---|

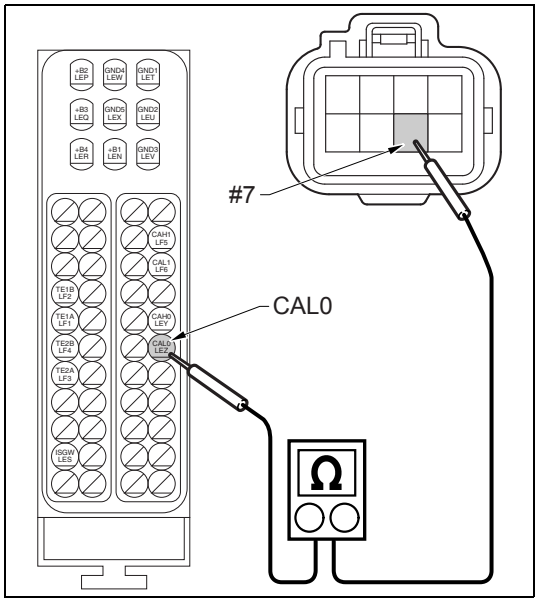


SAPH16ZZZ1100059

1. Use the electrical tester to measure the resistance between the Common rail_CAN_J/C3 #7 terminal and the DCU vehicle-side connector(53P) CAL0 terminal.

| Measurement conditions | Tester connections | Standard values |
|---|---|---|
| **Starter switch: LOCK** | **Common rail_CAN_J/C3 – DCU vehicle-side connector(53P) #7 – CAL0** | **1 Ω or less** |

**Do the measurements meet the standard value?**

**YES**

**Go to step 5.**

**NO**

**Disconnection or faulty continuity in CAN L-line between Common rail_CAN_J/C3 and DCU.**
**Repair or replace the harness.**
**Perform After-inspection work. (Clear all past DTC. Check no DTC is stored after test drive.)**

| 5 | Check the DCU power supply |
|---|---|

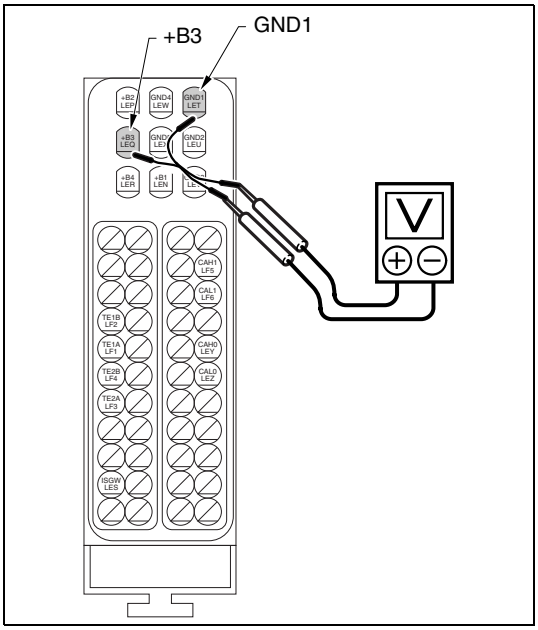


SAPH16ZZZ1100060

1. Connect the Common rail_CAN_J/C3 and DCU(53P) connector.
2. Set the starter switch to the "ON" position.
3. Connect the signal check harness, and use the electrical tester to measure the voltage between the terminals of the DCU.

| Measurement conditions | Tester connections | Standard values |
|---|---|---|
| Starter switch: ON | DCU vehicle-side connector(53P) +B3 – GND1 | 9 – 16 V |

**Do the measurements meet the standard value?**

**YES**

**Go to step 6.**

**NO**

**Check the DCU power supply circuit. Perform After-inspection work. (Clear all past DTC. Check no DTC is stored after test drive.)**

| 6 | Inspect the DCU [HINO DX ll ] |
|---|---|

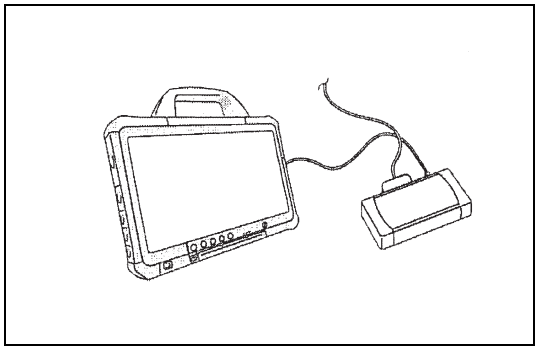

SAPH16ZZZ1100061

1. Set the starter switch to the "LOCK" position.
2. Connect DCU (53P) connector.
3. Set the starter switch to the "ON" position.
4. Select [Engine] and check if U010E has been detected.
5. Select [DCU] and check if U0029 has been detected

**Has DTC U010E or U0029 been detected?**

**YES**

**Replace the DCU.**
**Perform After-inspection work. (Clear all past DTC. Check no DTC is stored after test drive.)**

**NO**

**Procedure completed.**
**Perform After-inspection work. (Clear all past DTC. Check no DTC is stored after test drive.)**

# INSPECTION FOR NOx sensor 1 CAN COMMUNICATION LINE

EN01H16ZZZ110F03003012

| 1 | Inspect the connector |
|---|---|

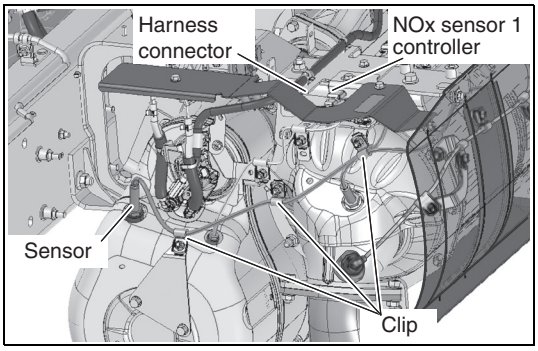


SAPH16ZZZ1100062

1. Check the connection of the joint connector Common rail_CAN_J/C3 and NOx sensor 1 connector (Looseness and poor contact).

**Was any failure found?**

**YES**

**Repair or replace the faulty part, and go to step 2.**

**NO**

**Connect securely, and go to step 2.**

| 2 | Check the DTC detected [HINO DX II ] |
|---|---|

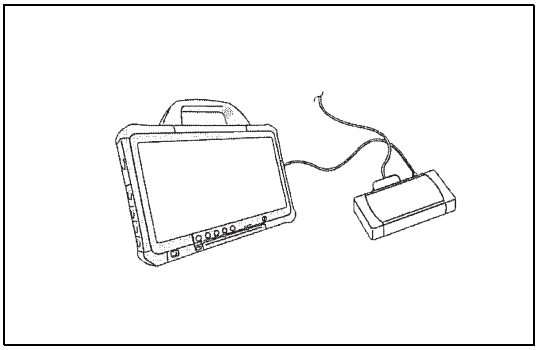

SAPH16ZZZ1100063

1. Connect the vehicle to HINO DX II .
2. Set the starter switch to the "ON" position.
3. Select [Engine] and [DCU], and check if the DTC has been detected.

**Has DTC U029D been detected?**

**YES**

**Go to step 3.**

**NO**

**Procedure completed.**
**Perform After-inspection work. (Clear all past DTC. Check no DTC is stored after test drive.)**

| 3 | Inspect the NOx sensor 1 harness (GND line) |
|---|---|

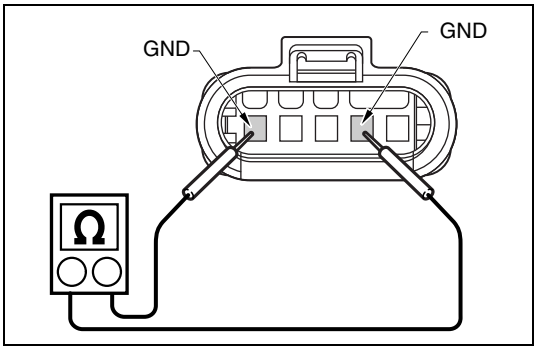

SAPH16ZZZ1100064

1. Set the starter switch to the "LOCK" position.
2. Disconnect the NOx sensor 1 connector.
3. Use the electrical tester to measure the resistance between the terminals of the NOx sensor 1 vehicle-side connector.

| Measurement conditions | Tester connections | Standard values |
|---|---|---|
| Starter switch: LOCK | NOx sensor 1 vehicle-side connector<br>GND – GND | Continuity exists |

**Do the measurements meet the standard value?**

**YES**

**Go to step 4.**

**NO**

**Repair or replace the harness.**
**Perform After-inspection work. (Clear all past DTC. Check no DTC is stored after test drive.)**

| 4 | Inspect the NOx sensor 1 harness (Power supply line) |
|---|---|

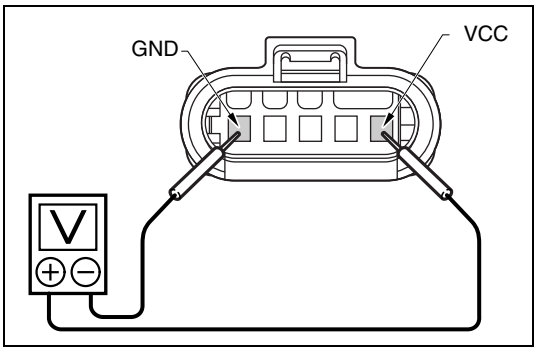

SAPH16ZZZ1100065

1. Set the starter switch to the "ON" position.
2. Use the electrical tester to measure the voltage between the terminals of the NOx sensor 1 vehicle-side connector.

| Measurement conditions | Tester connections | Standard values |
|---|---|---|
| Starter switch: ON | NOx sensor 1 vehicle-side connector<br>VCC – GND | 9 – 16V |

**Do the measurements meet the standard value?**

**YES**

**Go to step 5.**

**NO**

**Repair or replace the harness.**
**Perform After-inspection work. (Clear all past DTC. Check no DTC is stored after test drive.)**

| 5 | Inspect for disconnection in CAN H-line between Common rail_CAN_J/C3 and NOx sensor 1 (malfunction part 4) |
|---|---|

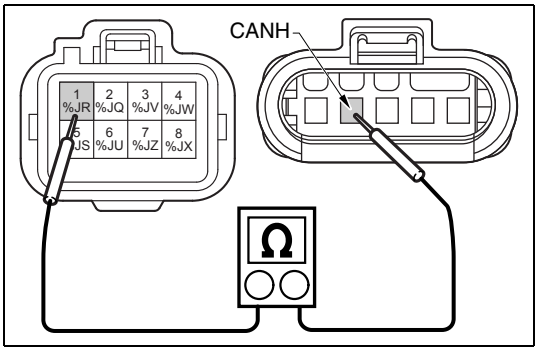

SAPH16ZZZ1100066

1. Set the starter switch to the "LOCK" position.
2. Disconnect the Common rail_CAN_J/C3 connector.
3. Use the electrical tester to measure the resistance between #1 terminal of the Common rail_CAN_J/C3 and CANH terminal of the NOx sensor 1 vehicle-side connector.

| Measurement conditions | Tester connections | Standard values |
|---|---|---|
| **Starter switch: LOCK** | **Common rail_CAN_J/C3 – NOx sensor 1 vehicle-side connector #1 – CANH** | **1 Ω or less** |

**Do the measurements meet the standard value?**

**YES**

**Go to step 6.**

**NO**

**Disconnection or poor continuity in CAN H-line between Common rail_CAN_J/C3 and NOx sensor 1. Repair or replace the harness. Perform After-inspection work. (Clear all past DTC. Check no DTC is stored after test drive.)**

| 6 | Inspect for disconnection in CAN L-line between Common rail_CAN_J/C3 and NOx sensor 1 (malfunction part 4) |
|---|---|

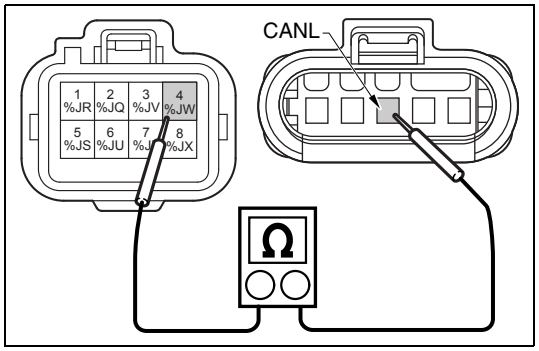

SAPH16ZZZ1100067

1. Use the electrical tester to measure the resistance between #4 terminal of the Common rail_CAN_J/C3 and CANL terminal of the NOx sensor 1 vehicle-side connector.

| Measurement conditions | Tester connections | Standard values |
|---|---|---|
| Starter switch: LOCK | Common rail_CAN_J/C3 – NOx sensor 1 vehicle-side connector #4 – CANL | 1 Ω or less |

**Do the measurements meet the standard value?**

**YES**

**Go to step 7.**

**NO**

**Disconnection or poor continuity in CAN L-line between Common rail_CAN_J/C3 and NOx sensor 1. Repair or replace the harness. Perform After-inspection work. (Clear all past DTC. Check no DTC is stored after test drive.)**

| 7 | Check for short-circuit in CAN H-line between Common rail_CAN_J/C3 and NOx sensor 1 (malfunction part 4) |
|---|---|

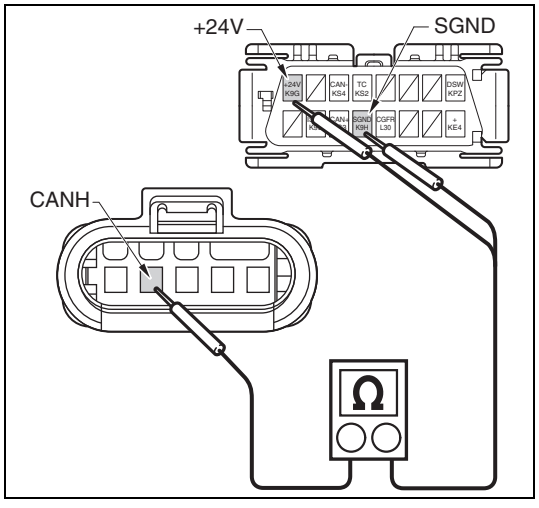

SAPH16ZZZ1100068

1. Use the electrical tester to check the continuity between the following terminals.
   (1) Between the CANH terminal in the NOx sensor 1 vehicle-side connector and the +24V(K9G) terminal in the DLC(16P) connector.
   (2) Between the CANH terminal in the NOx sensor 1 vehicle-side connector and the SGND(K9H) terminal in the DLC(16P) connector.

| Measurement conditions | Tester connections | Standard values |
|---|---|---|
| Starter switch: LOCK | NOx sensor 1 vehicle-side connector – DLC(16P) connector CANH – +24V(K9G) CANH – SGND(K9H) | No Continuity |

**Do the measurements meet the standard value?**

**YES**

**Go to step 8.**

**NO**

**Short-circuit in CAN H-line +B/GND between Common rail_CAN_J/C3 and NOx sensor 1.**
**Repair or replace the wire harness.**
**Perform After-inspection work. (Clear all past DTC. Check no DTC is stored after test drive.)**

| 8 | **Check for short-circuit in CAN L-line between Common rail_CAN_J/C3 and NOx sensor 1 (malfunction part 4)** |
|---|---|

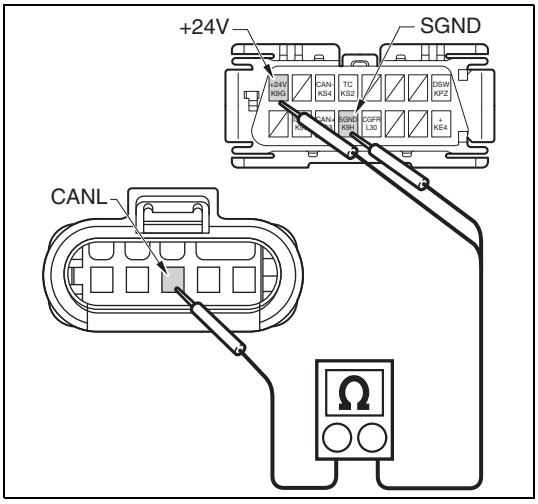

SAPH16ZZZ1100069

1. Use the electrical tester to check the continuity between the following terminals.
   (1) Between the CANL terminal in the NOx sensor 1 vehicle- side connector and the +24V(K9G) terminal in the DLC(16P) connector.
   (2) Between the CANL terminal in the NOx sensor 1 vehicle- side connector and the SGND(K9H) terminal in the DLC(16P) connector.

| Measurement conditions | Tester connections | Standard values |
|---|---|---|
| **Starter switch: LOCK** | **NOx sensor 1 vehicle-side connector – DLC(16P) connector CANL – +24V(K9G) CANL – SGND(K9H)** | **No Continuity** |

**Do the measurements meet the standard value?**

**YES**

**Go to step 9.**

**NO**

**Short-circuit in CAN L-line +B/GND between CAN_J/C3 and NOx sensor 1.**
**Repair or replace the wire harness.**
**Perform After-inspection work. (Clear all past DTC. Check no DTC is stored after test drive.)**

| 9 | Inspect the NOx sensor 1 [HINO DX II ] |
|---|---|

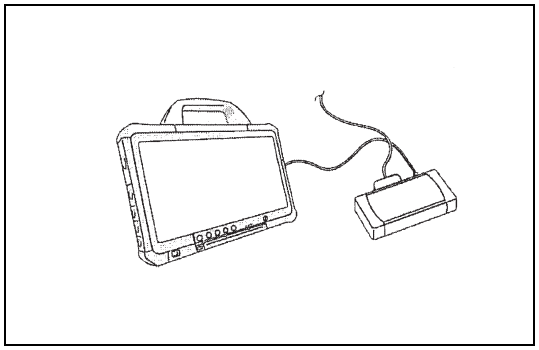

SAPH16ZZZ1100070

1. Connect the Common rail_CAN_J/C3 and NOx sensor 1 connector.
2. Set the starter switch to the "ON" position.
3. Select [Engine] and [DCU], and check if U029D has been detected.

**Has DTC U029D been detected?**

**YES**

**Replace the NOx sensor 1.**
**Perform After-inspection work. (Clear all past DTC. Check no DTC is stored after test drive.)**

**NO**

**Procedure completed.**
**Perform After-inspection work. (Clear all past DTC. Check no DTC is stored after test drive.)**

# INSPECTION FOR NOx sensor 2 CAN COMMUNICATION LINE

EN01H16ZZZ110F03003013

| 1 | Inspect the connector |
|---|---|

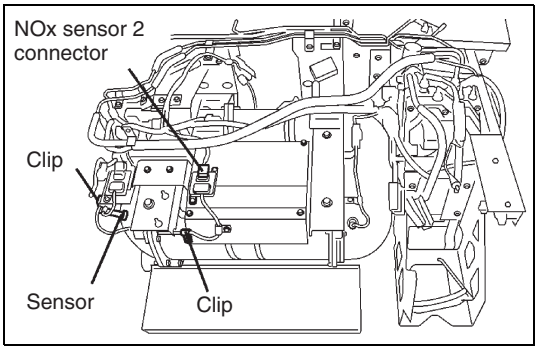


SAPH16ZZZ1100071

1. Check the connection of the joint connector Common rail_CAN_J/C3 and NOx sensor 2 connector (Looseness and poor contact).

**Was any failure found?**

**YES**

**Repair or replace the faulty part, and go to step 2.**

**NO**

**Connect securely, and go to step 2.**

| 2 | Check the DTC detected [HINO DX II ] |
|---|---|

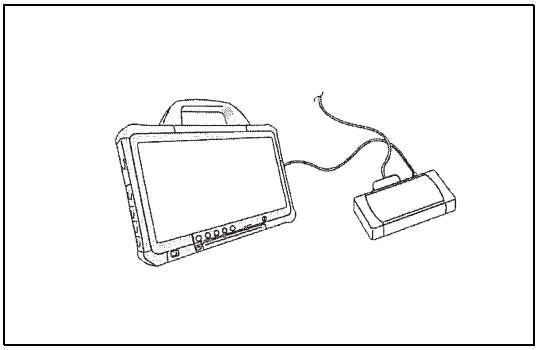

SAPH16ZZZ1100072

1. Connect the vehicle to HINO DX II .
2. Set the starter switch to the "ON" position.
3. Select [Engine] and [DCU], and check if the DTC has been detected.

**Has any DTC been detected?**

**YES**

**Go to step 3.**

**NO**

**Procedure completed.**
**Perform After-inspection work. (Clear all past DTC. Check no DTC is stored after test drive.)**

| 3 | Inspect the NOx sensor 2 harness (GND line) |
|---|---|

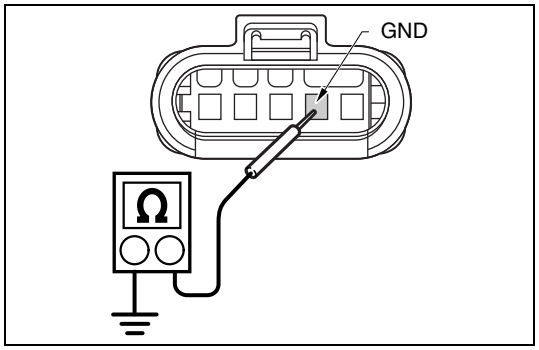

SAPH16ZZZ1100073

1. Set the starter switch to the "LOCK" position.
2. Disconnect the NOx sensor 2 connector.
3. Use the electrical tester to measure the resistance between the GND terminal in the NOx sensor 2 vehicle-side connector and the ground.

| Measurement conditions | Tester connections | Standard values |
|---|---|---|
| **Starter switch: LOCK** | **NOx sensor 2 vehicle-side connector – Ground GND – Ground** | **1 Ω or less** |

**Do the measurements meet the standard value?**

**YES**

**Go to step 4.**

**NO**

**Repair or replace the harness.**
**Perform After-inspection work. (Clear all past DTC. Check no DTC is stored after test drive.)**

| 4 | Inspect the NOx sensor 2 harness (Power supply line) |
|---|---|

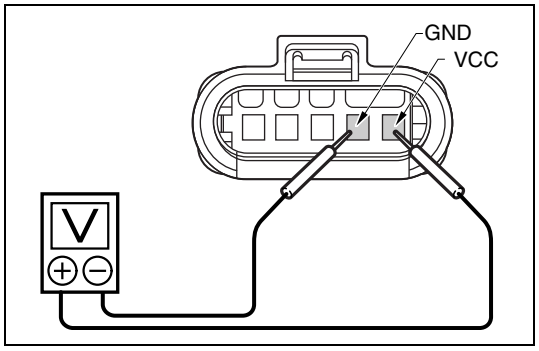

SAPH16ZZZ1100074

1. Set the starter switch to the "ON" position.
2. Use the electrical tester to measure the voltage between the terminals of the NOx sensor 2 vehicle-side connector.

| Measurement conditions | Tester connections | Standard values |
|---|---|---|
| **Starter switch: ON** | **NOx sensor 2 vehicle-side connector VCC – GND** | **9 – 16V** |

**Do the measurements meet the standard value?**

**YES**

**Go to step 5.**

**NO**

**Repair or replace the harness.**
**Perform After-inspection work. (Clear all past DTC. Check no DTC is stored after test drive.)**

| 5 | Inspect for disconnection in CAN H-line between Common rail_CAN_J/C3 and NOx sensor 2 (malfunction part 5) |
|---|---|

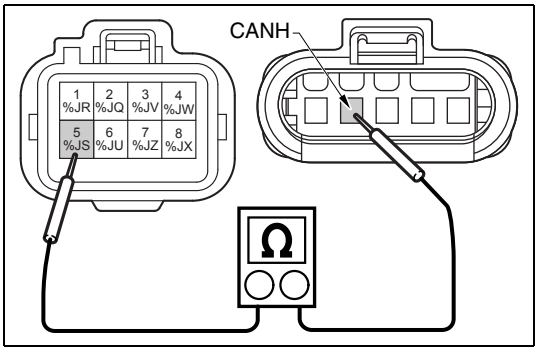

SAPH16ZZZ1100075

1. Set the starter switch to the "LOCK" position.
2. Disconnect the Common rail_CAN_J/C3 connector.
3. Use the electrical tester to measure the resistance between #5 terminal of the Common rail_CAN_J/C3 and CANH terminal of the NOx sensor 2 vehicle-side connector.

| Measurement conditions | Tester connections | Standard values |
|---|---|---|
| **Starter switch: LOCK** | **Common rail_CAN_J/C3 – NOx sensor 1 vehicle-side connector #5 – CANH** | **1 Ω or less** |

**Do the measurements meet the standard value?**

**YES**

**Go to step 6.**

**NO**

**Disconnection or poor continuity in CAN H-line between Common rail_CAN_J/C3 and NOx sensor 2. Repair or replace the harness. Perform After-inspection work. (Clear all past DTC. Check no DTC is stored after test drive.)**

| 6 | Inspect for disconnection in CAN L-line between Common rail_CAN_J/C3 and NOx sensor 2 (malfunction part 5) |
|---|---|

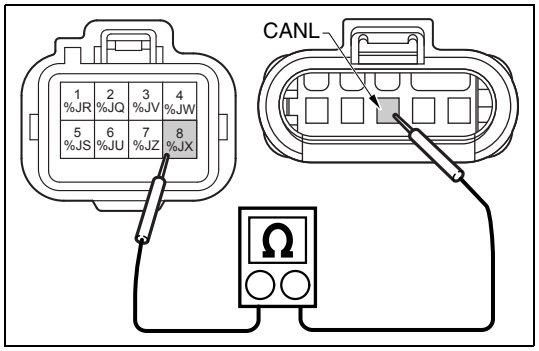

SAPH16ZZZ1100076

1. Use the electrical tester to measure the resistance between #8 terminal of the Common rail_CAN_J/C3 and CANL terminal of the NOx sensor 2 vehicle-side connector.

| Measurement conditions | Tester connections | Standard values |
|---|---|---|
| Starter switch: LOCK | Common rail_CAN_J/C3 – NOx sensor 2 vehicle-side connector #8 – CANL | 1 Ω or less |

**Do the measurements meet the standard value?**

**YES**

**Go to step 7.**

**NO**

**Disconnection or poor continuity in CAN L-line between Common rail_CAN_J/C3 and NOx sensor 2. Repair or replace the harness. Perform After-inspection work. (Clear all past DTC. Check no DTC is stored after test drive.)**

| 7 | Check for short-circuit in CAN H-line between Common rail_CAN_J/C3 and NOx sensor 2 (malfunction part 5) |
|---|---|

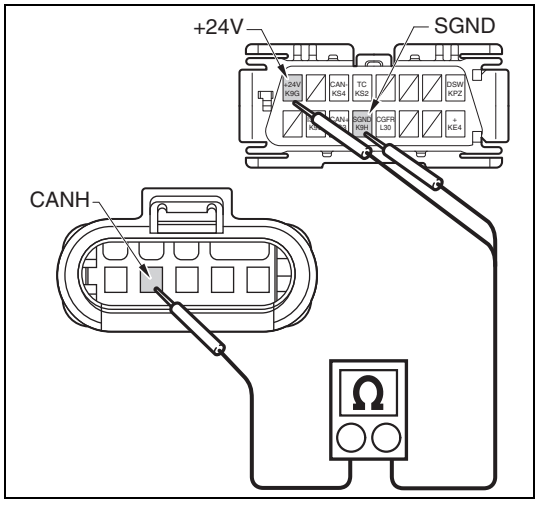

SAPH16ZZZ1100077

1. Use the electrical tester to check the continuity between the following terminals.
   (1) Between the CANH terminal in the NOx sensor 2 vehicle-side connector and the +24V(K9G) terminal in the DLC(16P) connector.
   (2) Between the CANH terminal in the NOx sensor 2 vehicle-side connector and the SGND(K9H) terminal in the DLC(16P) connector.

| Measurement conditions | Tester connections | Standard values |
|---|---|---|
| Starter switch: LOCK | NOx sensor 2 vehicle-side connector – DLC(16P) connector CANH – +24V(K9G) CANH – SGND(K9H) | No Continuity |

**Do the measurements meet the standard value?**

**YES**

**Go to step 8.**

**NO**

**Short-circuit in CAN H-line +B/GND between Common rail_CAN_J/C3 and NOx sensor 2.**
**Repair or replace the wire harness.**
**Perform After-inspection work. (Clear all past DTC. Check no DTC is stored after test drive.)**

| 8 | **Check for short-circuit in CAN L-line between Common rail_CAN_J/C3 and NOx sensor 2 (malfunction part 5)** |
|---|---|

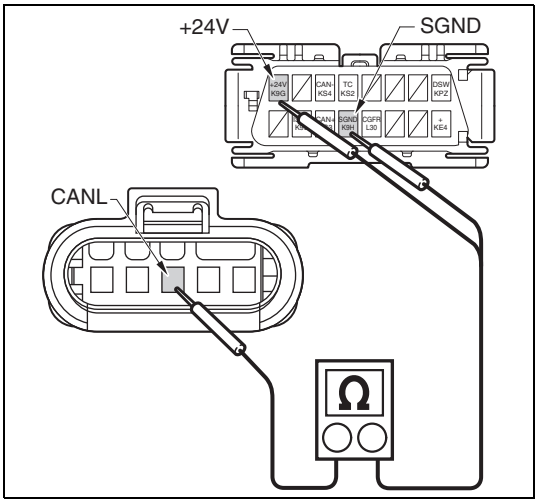

SAPH16ZZZ1100078

1. Use the electrical tester to check the continuity between the following terminals.
   (1) Between the CANL terminal in the NOx sensor 2 vehicle- side connector and the +24V(K9G) terminal in the DLC(16P) connector.
   (2) Between the CANL terminal in the NOx sensor 2 vehicle- side connector and the SGND(K9H) terminal in the DLC(16P) connector.

| Measurement conditions | Tester connections | Standard values |
|---|---|---|
| **Starter switch: LOCK** | **NOx sensor 2 vehicle-side connector – DLC(16P) connector**<br>**CANL – +24V(K9G)**<br>**CANL – SGND(K9H)** | **No Continuity** |

**Do the measurements meet the standard value?**

**YES**

**Go to step 9.**

**NO**

**Short-circuit in CAN L-line +B/GND between Common rail_CAN_J/C3 and NOx sensor 2.**
**Repair or replace the wire harness.**
**Perform After-inspection work. (Clear all past DTC. Check no DTC is stored after test drive.)**

| 9 | Inspect the NOx sensor 2 [HINO DX II ] |
|---|---|

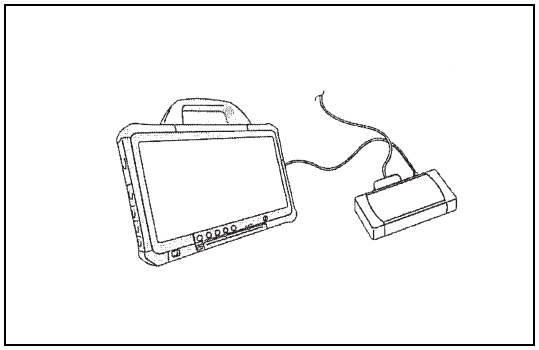

SAPH16ZZZ1100079

1. Connect the Common rail_CAN_J/C3 and NOx sensor 2 connector.
2. Set the starter switch to the "ON" position.
3. Select [Engine] and [DCU], and check if U029E has been detected.

**Has DTC U029E been detected?**

**YES**

**Replace the NOx sensor 2.**
**Perform After-inspection work. (Clear all past DTC. Check no DTC is stored after test drive.)**

**NO**

**Procedure completed.**
**Perform After-inspection work. (Clear all past DTC. Check no DTC is stored after test drive.)**

# INSPECTION FOR DEF SENSOR CAN COMMUNICATION LINE

EN01H16ZZZ110F03003014

| 1 | Inspect the connector |
|---|---|

1. Check the connection of the joint connector Common rail_CAN_J/C1 and DEF sensor connector (Looseness and poor contact).

**Was any failure found?**

**YES**

**Repair or replace the faulty part, and go to step 2.**

**NO**

**Connect securely, and go to step 2.**

| 2 | Check the DTC detected [HINO DX II ] |
|---|---|

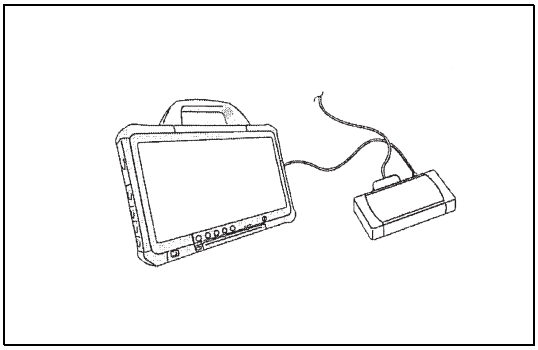

SAPH16ZZZ1100080

1. Set the starter switch to the "ON" position.
2. Select [Engine ECU] and [DCU], and check if U02A2 has been detected.

**Has DTC U02A2 been detected?**

**YES**

**Go to step 3.**

**NO**

**Procedure completed.**
**Perform After-inspection work. (Clear all past DTC. Check no DTC is stored after test drive.)**

## 3 Inspect the DEF sensor harness (GND circuit)

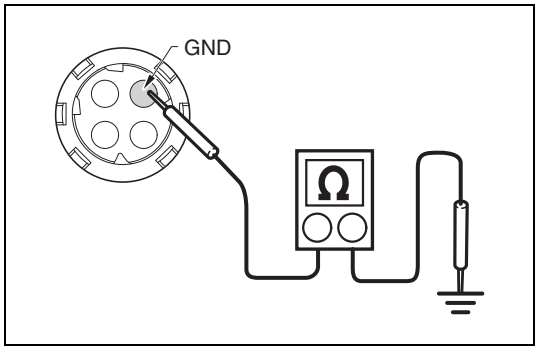


SAPH16ZZZ1100081

1. Set the starter switch to the "LOCK" position.
2. Disconnection the DEF sensor connector.
3. Use the electrical tester to measure the resistance between the GND terminal in the DEF sensor vehicle-side connector and the ground.

| Measurement conditions | Tester connections | Standard values |
|---|---|---|
| **Starter switch: LOCK** | **DEF sensor vehicle-side connector – Ground<br>GND – Ground** | **1 Ω or less** |

**Do the measurements meet the standard value?**

**YES**

**Go to step 4.**

**NO**

**Inspect the DEF sensor ground circuit.**
**Perform After-inspection work. (Clear all past DTC. Check no DTC is stored after test drive.)**

## 4 Inspect the DEF sensor harness (Power supply circuit)

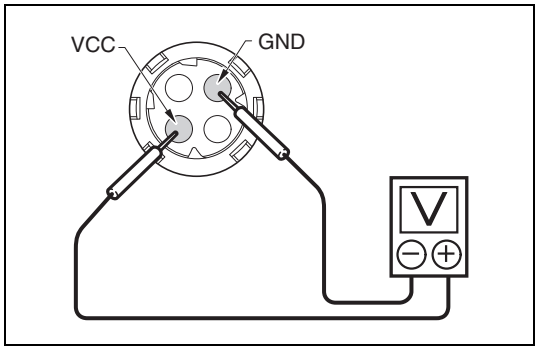


SAPH16ZZZ1100082

1. Set the starter switch to the "ON" position.
2. Use the electrical tester to measure the voltage between the terminals of the DEF sensor vehicle-side connector.

| Measurement conditions | Tester connections | Standard values |
|---|---|---|
| **Starter switch: ON** | **DEF sensor vehicle-side connector<br>VCC – GND** | **9 – 16 V** |

**Do the measurements meet the standard value?**

**YES**

**Go to step 5.**

**NO**

**Inspect the DEF sensor power supply circuit. (between fuse and relay block B and DEF sensor)**
**Perform After-inspection work. (Clear all past DTC. Check no DTC is stored after test drive.)**

| 5 | Inspect for disconnection in CAN H-line between Common rail_CAN_J/C1 and DEF sensor (malfunction part 3) |
|---|---|

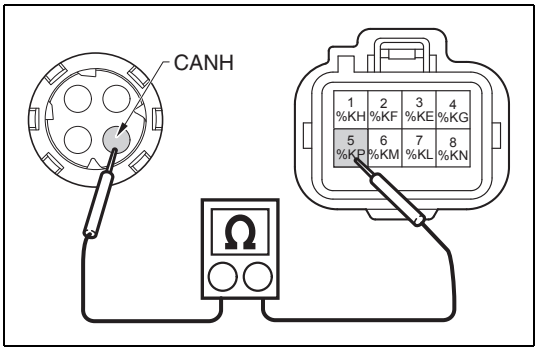

SAPH16ZZZ1100083

1. Set the starter switch to the "LOCK" position.
2. Disconnect the Common rail_CAN_J/C1 connector.
3. Use the electrical tester to measure the resistance between the Common rail_CAN_J/C1 #5 terminal and CANH terminal of the DEF sensor.

| Measurement conditions | Tester connections | Standard values |
|---|---|---|
| Starter switch: LOCK | Common rail_CAN_J/C1 – DEF sensor vehicle-side connector #5 – CANH | 1 Ω or less |

**Do the measurements meet the standard value?**

**YES**

**Go to step 6.**

**NO**

**Disconnection or faulty continuity in CAN H-line between Common rail_CAN_J/C1 and DEF sensor. Repair or replace the harness. Perform After-inspection work. (Clear all past DTC. Check no DTC is stored after test drive.)**

| 6 | Check for disconnection in CAN L-line between Common rail_CAN_J/C1 and DEF sensor (malfunction part 3) |
|---|---|

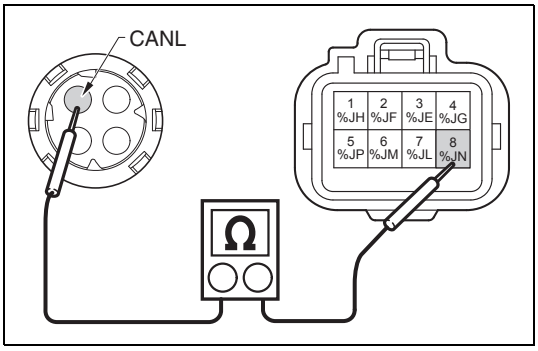

SAPH16ZZZ1100084

1. Use the electrical tester to measure the resistance between the Common rail_CAN_J/C1 #8 terminal and CANL terminal of the DEF sensor.

| Measurement conditions | Tester connections | Standard values |
|---|---|---|
| Starter switch: LOCK | Common rail_CAN_J/C1 – DEF sensor vehicle-side connector #8 – CANL | 1 Ω or less |

**Do the measurements meet the standard value?**

**YES**

**Go to step 7.**

**NO**

**Disconnection or faulty continuity in CAN L-line between Common rail_CAN_J/C1 and DEF sensor. Repair or replace the harness.**
**Perform After-inspection work. (Clear all past DTC. Check no DTC is stored after test drive.)**

| 7 | **Check for short-circuit in CAN H-line between Common rail_CAN_J/C1 and DEF sensor (malfunction part 3)** |
|---|---|

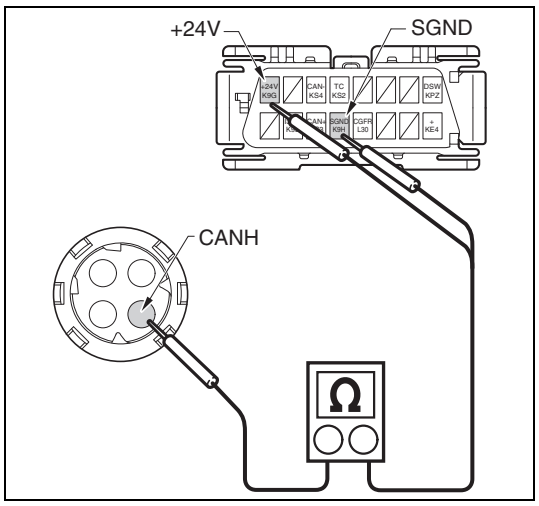

SAPH16ZZZ1100085

1. Use the electrical tester to check the continuity between the following terminals.
   (1) Between the CANH terminal in the DEF sensor vehicle-side connector and the +24V(K9G) terminal in the DLC(16P) connector.
   (2) Between the CANH terminal in the DEF sensor vehicle-side connector and the SGND(K9H) terminal in the DLC(16P) connector.

| Measurement conditions | Tester connections | Standard values |
|---|---|---|
| **Starter switch: LOCK** | **DEF sensor vehicle-side connector – DLC(16P)connector CANH – +24V(K9G) CANH – SGND(K9H)** | **1 Ω or less** |

**Do the measurements meet the standard value?**

**YES**

**Go to step 8.**

**NO**

**Short-circuit in CAN H-line +B/GND between CAN_J/C1 and DEF sensor.**
**Repair or replace the wire harness.**
**Perform After-inspection work. (Clear all past DTC. Check no DTC is stored after test drive.)**

| 8 | Check for short-circuit in CAN L-line between Common rail_CAN_J/C1 and DEF sensor (malfunction part 3) |
|---|---|

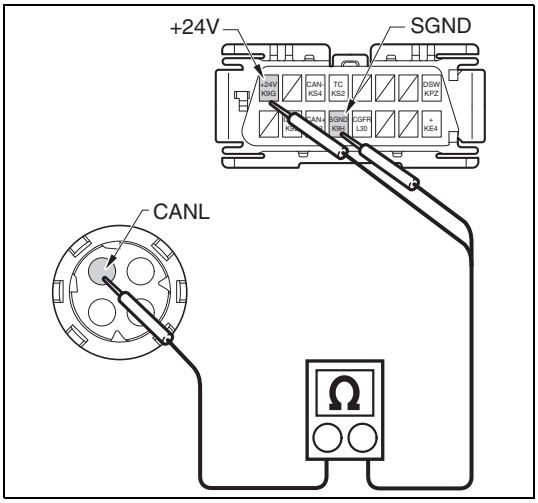

SAPH16ZZZ1100086

1. Use the electrical tester to check the continuity between the following terminals.
   (1) Between the CANL terminal in the DEF sensor vehicle- side connector and the +24V(K9G) terminal in the DLC(16P) connector.
   (2) Between the CANL terminal in the DEF sensor vehicle- side connector and the SGND(K9H) terminal in the DLC(16P) connector.

| Measurement conditions | Tester connections | Standard values |
|---|---|---|
| **Starter switch: LOCK** | **DEF sensor vehicle-side connector – DLC(16P) connector CANL – +24V(K9G) CANL – SGND(K9H)** | **1 Ω or less** |

**Do the measurements meet the standard value?**

**YES**

**Go to step 9.**

**NO**

**Short-circuit in CAN L-line +B/GND between CAN_J/C1 and DEF sensor.**
**Repair or replace the wire harness.**
**Perform After-inspection work. (Clear all past DTC. Check no DTC is stored after test drive.)**

| 9 | Inspect the DEF sensor [HINO DX ll ] |
|---|---|

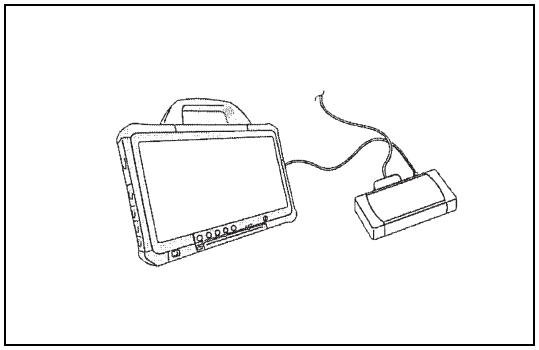

SAPH16ZZZ1100087

1. Connect the Common rail_CAN_J/C1 and DEF sensor connector.
2. Set the starter switch to the "ON" position.
3. Select [Engine] and [DCU], and check if U02A2 has been detected.

**Has DTC U02A2 been detected?**

**YES**

**Replace the DEF sensor.**
**Perform After-inspection work. (Clear all past DTC. Check no DTC is stored after test drive.)**

**NO**

**Procedure completed.**
**Perform After-inspection work. (Clear all past DTC. Check no DTC is stored after test drive.)**

# INSPECTION FOR PM SENSOR CAN COMMUNICATION LINE

| 1 | Inspect the connector |
|---|---|

1. Check the connection of the joint connector Common rail_CAN_J/C1 and PM sensor connector (Looseness and poor contact).

**Was any failure found?**

**YES**

**Repair or replace the faulty part, and go to step 2.**

**NO**

**Connect securely, and go to step 2.**

| 2 | Check the DTC detected [HINO DX II ] |
|---|---|

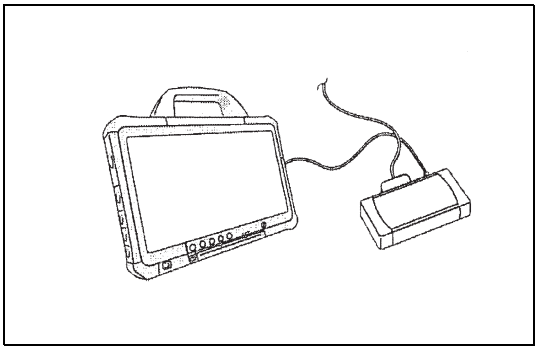

SAPH16ZZZ1100088

1. Set the starter switch to the "ON" position.
2. Select [Engine ECU], and check if U02A3 has been detected.

**Has DTC U02A3 been detected?**

**YES**

**Go to step 3.**

**NO**

**Procedure completed.**
**Perform After-inspection work. (Clear all past DTC. Check no DTC is stored after test drive.)**

## 3 Inspect the PM sensor harness (GND circuit)

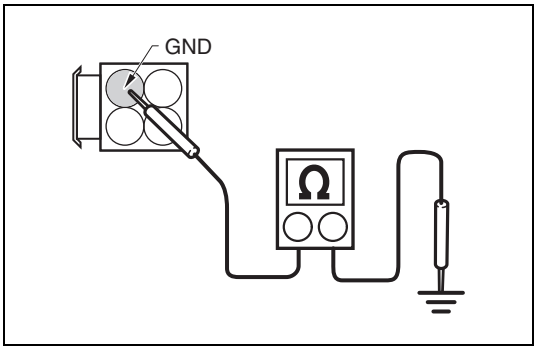


SAPH16ZZZ1100089

1. Set the starter switch to the "LOCK" position.
2. Disconnection the PM sensor connector.
3. Use the electrical tester to measure the resistance between the GND terminal in the PM sensor vehicle-side connector and the ground.

| Measurement conditions | Tester connections | Standard values |
|---|---|---|
| Starter switch: LOCK | DEF sensor vehicle-side connector – Ground<br>GND – Ground | 1 Ω or less |

**Do the measurements meet the standard value?**

**YES**

**Go to step 4.**

**NO**

**Inspect the PM sensor ground circuit.**
**Perform After-inspection work. (Clear all past DTC. Check no DTC is stored after test drive.)**

## 4 Inspect the PM sensor harness (Power supply circuit)

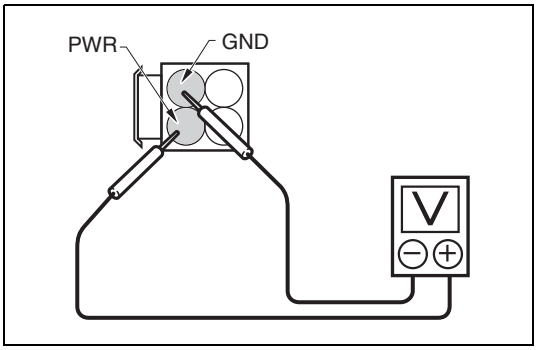


SAPH16ZZZ1100090

1. Set the starter switch to the "ON" position.
2. Use the electrical tester to measure the voltage between the terminals of the PM sensor vehicle-side connector.

| Measurement conditions | Tester connections | Standard values |
|---|---|---|
| Starter switch: ON | PM sensor vehicle-side connector PWR – GND | 9 – 16 V |

**Do the measurements meet the standard value?**

**YES**

**Go to step 5.**

**NO**

**Inspect the PM sensor power supply circuit. (between fuse and relay block B and PM sensor)**
**Perform After-inspection work. (Clear all past DTC. Check no DTC is stored after test drive.)**

| 5 | Inspect for disconnection in CAN H-line between Common rail_CAN_J/C1 and PM sensor (malfunction part 12) |
|---|---|

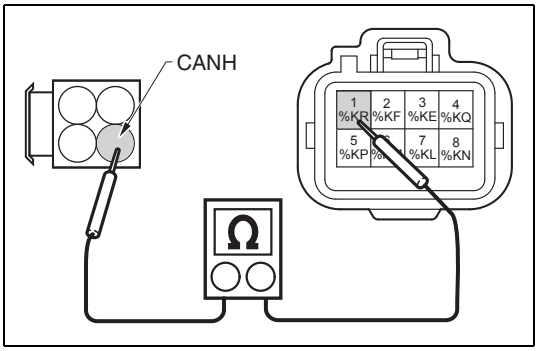

SAPH16ZZZ1100091

1. Set the starter switch to the "LOCK" position.
2. Disconnect the Common rail_CAN_J/C1 connector.
3. Use the electrical tester to measure the resistance between the Common rail_CAN_J/C1 #1 terminal and CANH terminal of the PM sensor.

| Measurement conditions | Tester connections | Standard values |
|---|---|---|
| Starter switch: LOCK | Common rail_CAN_J/C1 – PM sensor vehicle-side connector #1 – CANH | 1 Ω or less |

**Do the measurements meet the standard value?**

**YES**

**Go to step 6.**

**NO**

**Disconnection or faulty continuity in CAN H-line between Common rail_CAN_J/C1 and PM sensor. Repair or replace the harness. Perform After-inspection work. (Clear all past DTC. Check no DTC is stored after test drive.)**

| 6 | Check for disconnection in CAN L-line between Common rail_CAN_J/C1 and PM sensor (malfunction part 12) |
|---|---|

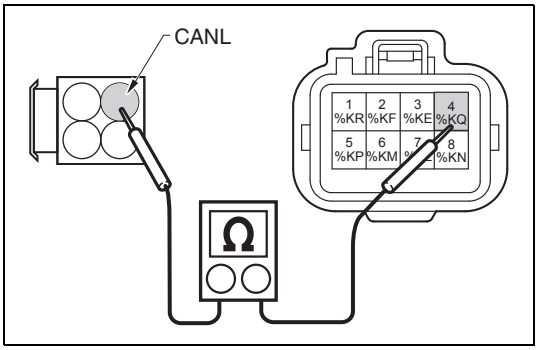

SAPH16ZZZ1100092

1. Use the electrical tester to measure the resistance between the Common rail_CAN_J/C1 #4 terminal and CANL terminal of the PM sensor.

| Measurement conditions | Tester connections | Standard values |
|---|---|---|
| Starter switch: LOCK | Common rail_CAN_J/C1 – PM sensor vehicle-side connector #4 – CANL | 1 Ω or less |

**Do the measurements meet the standard value?**

**YES**

**Go to step 7.**

**NO**

**Disconnection or faulty continuity in CAN L-line between Common rail_CAN_J/C1 and PM sensor. Repair or replace the harness.**
**Perform After-inspection work. (Clear all past DTC. Check no DTC is stored after test drive.)**

| 7 | **Check for short-circuit in CAN H-line between Common rail_CAN_J/C1 and PM sensor (malfunction part 12)** |
|---|---|

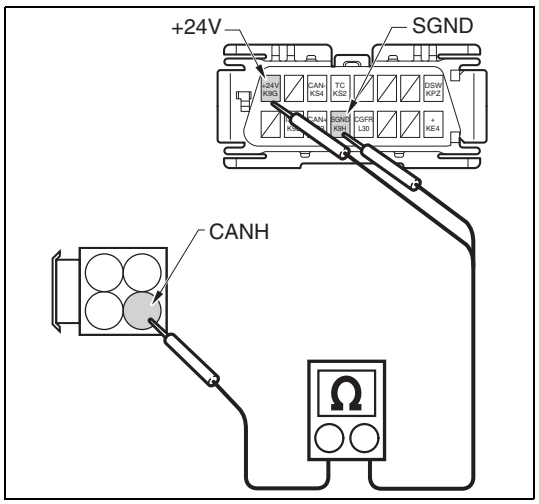

SAPH16ZZZ1100093

1. Use the electrical tester to check the continuity between the following terminals.
   (1) Between the CANH terminal in the PM sensor vehicle-side connector and the +24V(K9G) terminal in the DLC(16P) connector.
   (2) Between the CANH terminal in the PM sensor vehicle-side connector and the SGND(K9H) terminal in the DLC(16P) connector.

| Measurement conditions | Tester connections | Standard values |
|---|---|---|
| **Starter switch: LOCK** | **PM sensor vehicle-side connector – DLC(16P)connector**<br>**CANH – +24V(K9G)**<br>**CANH – SGND(K9H)** | **1 Ω or less** |

**Do the measurements meet the standard value?**

**YES**

**Go to step 8.**

**NO**

**Short-circuit in CAN H-line +B/GND between CAN_J/C1 and PM sensor.**
**Repair or replace the wire harness.**
**Perform After-inspection work. (Clear all past DTC. Check no DTC is stored after test drive.)**

| 8 | Check for short-circuit in CAN L-line between Common rail_CAN_J/C1 and PM sensor (malfunction part 12) |
|---|---|

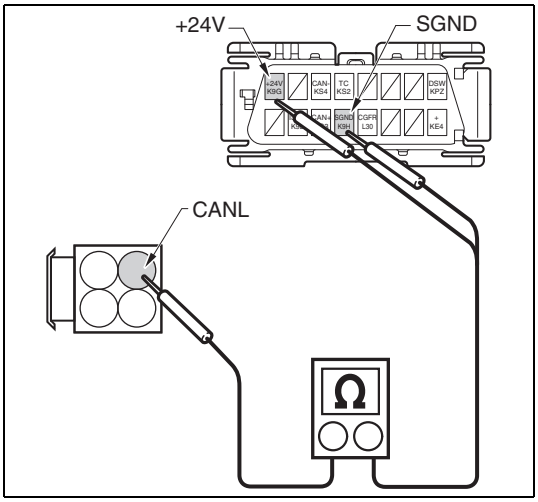

SAPH16ZZZ1100094

1. Use the electrical tester to check the continuity between the following terminals.
   (1) Between the CANL terminal in the PM sensor vehicle- side connector and the +24V(K9G) terminal in the DLC(16P) connector.
   (2) Between the CANL terminal in the PM sensor vehicle- side connector and the SGND(K9H) terminal in the DLC(16P) connector.

| Measurement conditions | Tester connections | Standard values |
|---|---|---|
| **Starter switch: LOCK** | **PM sensor vehicle-side connector – DLC(16P) connector CANL – +24V(K9G) CANL – SGND(K9H)** | **1 Ω or less** |

**Do the measurements meet the standard value?**

**YES**

**Go to step 9.**

**NO**

**Short-circuit in CAN L-line +B/GND between CAN_J/C1 and PM sensor.**
**Repair or replace the wire harness.**
**Perform After-inspection work. (Clear all past DTC. Check no DTC is stored after test drive.)**

| 9 | Inspect the PM sensor [HINO DX ll ] |
|---|---|

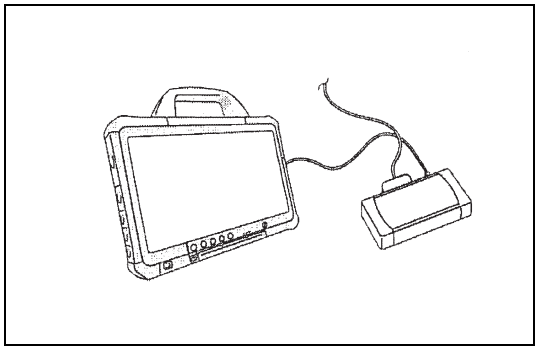

SAPH16ZZZ1100095

1. Connect the Common rail_CAN_J/C1 and PM sensor connector.
2. Set the starter switch to the "ON" position.
3. Select [Engine], and check if U02A3 has been detected.

**Has DTC U02A3 been detected?**

**YES**

**Replace the PM sensor.**
**Perform After-inspection work. (Clear all past DTC. Check no DTC is stored after test drive.)**

**NO**

**Procedure completed.**
**Perform After-inspection work. (Clear all past DTC. Check no DTC is stored after test drive.)**

# DIAGNOSIS CAN COMMUNICATION LINE

## ABNORMAL CAN COMMUNICATION DTC DETECTED

EN01H16ZZZ110F03004001

If any DTC of "CAN communication abnormal" is detected, carry out "PRE-INSPECTION FOR DIAGNOSIS CAN COMMUNICATION LINE" first.

## CONNECTION DIAGRAM

EN01H16ZZZ110F03004002

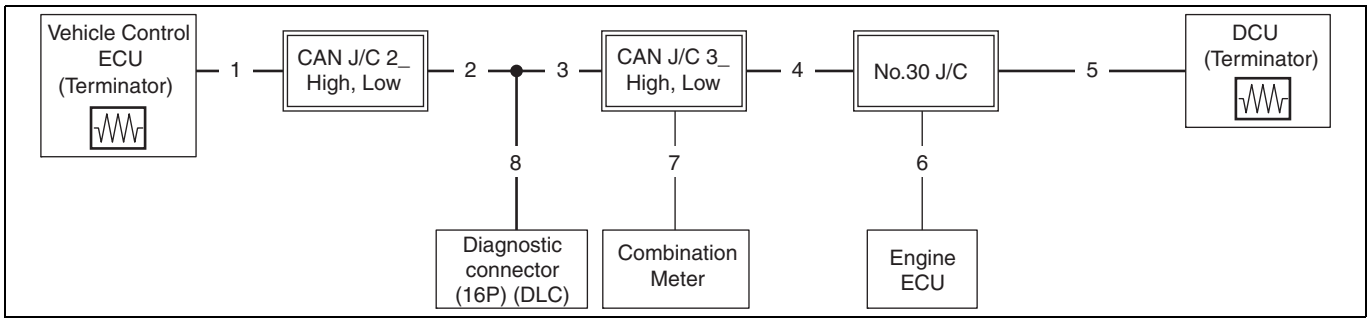


SAPH16ZZZ1100096

## CAN COMMUNICATION LINE MALFUNCTION PART DETERMINATION TABLE

EN01H16ZZZ110F03004003

1. Engine ECU

| Detected DTC | Estimated malfunction part | DTC diagnosis/inspection item |
|---|---|---|
| U110A, U1001 | 1, 2, 3, 4, 5, 6, 8 | • Pre-inspection for diagnosis CAN communication line<br>• Disconnection inspection for diagnosis CAN H/L communication line<br>• Inspection for engine ECU CAN communication line |
| Failure to communicate the engine ECU with the HINO DX II | 1, 2, 3, 4, 5, 6, 8 | • Pre-inspection for diagnosis CAN communication line<br>• Inspection for engine ECU CAN communication line |
| Indicate engine system "** indication is stopped" or "** abnormal" are indicated on the multi-information indicator (combination meter). | 1, 2, 3, 4, 5, 6 | • Pre-inspection for diagnosis CAN communication line<br>• Inspection for engine ECU CAN communication line |

2. DCU

| Detected DTC | Estimated malfunction part | DTC diagnosis/inspection item |
|---|---|---|
| U0038 | 1, 2, 3, 4, 5 | • Pre-inspection for diagnosis CAN communication line<br>• Disconnection inspection for diagnosis CAN H/L communication line<br>• Inspection for engine ECU CAN communication line |
| U0100 with engine ECU / U110A, U1001 | 1, 2, 3, 4, 5 | • Pre-inspection for diagnosis CAN communication line<br>• Disconnection inspection for diagnosis CAN H/L communication line |
| Failure to communicate the DCU with the HINO DX II | 1, 2, 3, 4, 5, 8 | • Pre-inspection for diagnosis CAN communication line |

3. Vehicle control ECU

| Detected DTC | Estimated malfunction part | DTC diagnosis/inspection item |
|---|---|---|
| U0105 | 1, 2, 3, 4, 5, 6 | • Pre-inspection for diagnosis CAN communication line<br>• Disconnection inspection for diagnosis CAN H/L communication line<br>• Inspection for engine ECU CAN communication line |
| Failure to communicate the Vehicle control ECU with the HINO DX II | 1, 2, 3, 4, 5, 8 | • Pre-inspection for diagnosis CAN communication line |
| Indicate engine system "** indication is stopped" or "** abnormal" are indicated on the multi-information indicator (combination meter). | 1, 2, 3, 4, 5, 8 | • Pre-inspection for diagnosis CAN communication line |

# PRE-INSPECTION FOR DIAGNOSIS CAN COMMUNICATION LINE

EN01H16ZZZ110F03004004

| 1 | Check for +B/GND short-circuit in CAN H-line |
|---|---|

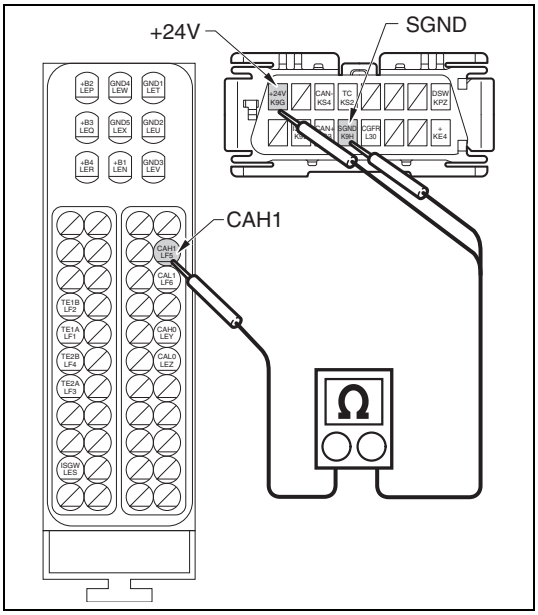


SAPH16ZZZ1100097

1. Set the starter switch to the "LOCK" position.
2. Disconnect the connector of the controller below that are connected to the diagnosis CAN line.
- DCU(53P), Engine ECU
- Combination meter, vehicle control ECU
3. Use the electrical tester to check the continuity between the CAH1 terminal in the DCU vehicle-side connector(53P) and the +24V(K9G) terminal and SGND(K9H) terminal in the DLC(16P) connector.

| Measurement conditions | Tester connections | Standard values |
|---|---|---|
| **Starter switch: LOCK** | **DCU vehicle-side connector – DLC(16P) connector<br>CAH1 – +24V(K9G)<br>CAH1 – SGND(K9H)** | **No Continuity** |

**Do the measurements meet the standard value?**

**YES**

**Go to step 2.**

**NO**

**Refer to "INSPECTION FOR SHORT-CIRCUIT IN DIAGNOSIS CAN H-line"**

## 2 Check for +B/GND short-circuit in CAN L-line

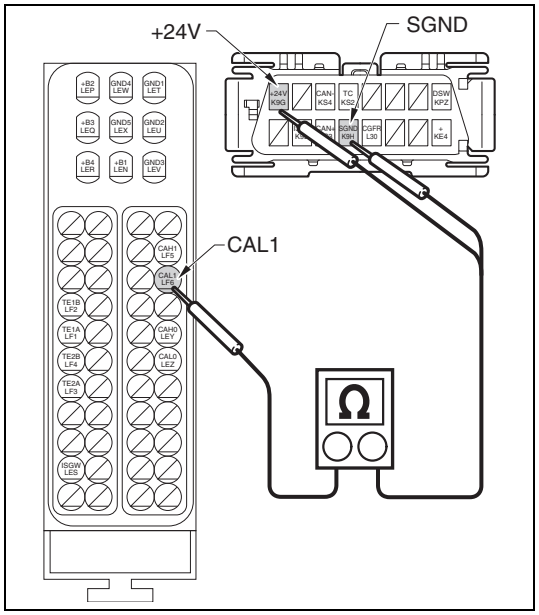


SAPH16ZZZ1100098

1. Use the electrical tester to check the continuity between the CAL1 terminal in the DCU vehicle-side connector(53P) and the +24V(K9G) terminal and SGND(K9H) terminal in the DLC(16P) connector.

| Measurement conditions | Tester connections | Standard values |
|---|---|---|
| Starter switch: LOCK | DCU vehicle-side connector – DLC(16P) connector CAL1 – +24V(K9G) CAL1 – SGND(K9H) | No Continuity |

**Do the measurements meet the standard value?**

**YES**

**Go to step 3.**

**NO**

**Refer to "INSPECTION FOR SHORT-CIRCUIT IN DIAGNOSIS CAN L-line"**

## 3 Check the DCU (terminating resistance)

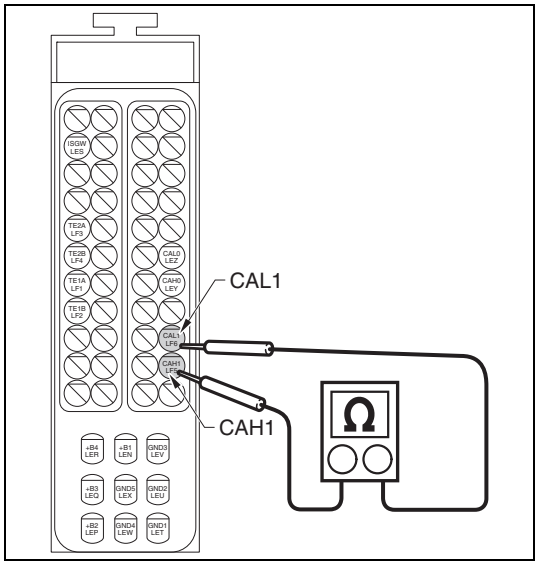


SAPH16ZZZ1100099

1. Use the electrical tester to measure the terminating resistance of DCU(53P).

| Measurement conditions | Tester connections | Standard values |
|---|---|---|
| Starter switch: LOCK | DCU(53P): CAH1 – CAL1 | 120 Ω ± 10 Ω |

**Do the measurements meet the standard value?**

YES

**Go to step 4.**

NO

**Replace the DCU.**
**After replacing the DCU, confirm that no CAN communication system DTC is detected.**
**Perform After-inspection work. (Clear all past DTC. Check no DTC is stored after test drive.)**

## 4 Check the vehicle control ECU (terminating resistance)

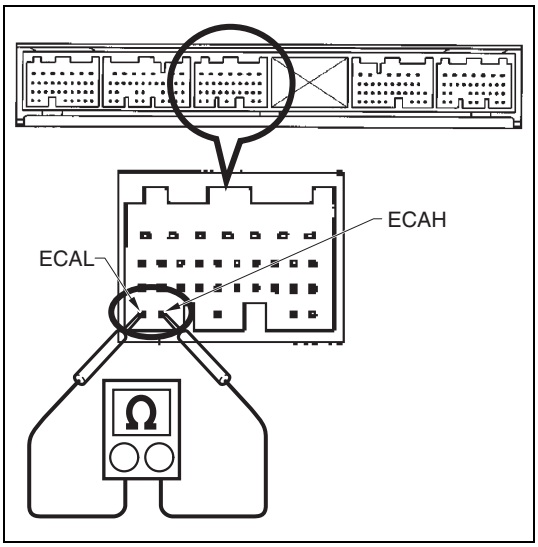


SAPH16ZZZ1100100

1. Use the electrical tester to measure the terminating resistance of the vehicle control ECU.

| Measurement conditions | Tester connections | Standard values |
|---|---|---|
| Starter switch: LOCK | Vehicle control ECU ECAH – ECAL | 120 Ω ± 10 Ω |

**Do the measurements meet the standard value?**

YES

**Procedure completed.**
**Check if the terminals of each connector are no abnormality, and then connect each connector properly.**
**Go to the diagnostic procedure for the detected DTC.**

NO

**Replace the vehicle control ECU.**
**After replacing the ECU, confirm that no CAN communication system DTC is detected.**
**Perform After-inspection work. (Clear all past DTC. Check no DTC is stored after test drive.)**

# DISCONNECTION INSPECTION FOR DIAGNOSIS CAN_H/L_COMMUNICATION LINE

EN01H16ZZZ110F03004005

| 1 | Check harness in CAN bus line between No. 30_J/C and DCU (malfunction parts 5) |
|---|---|

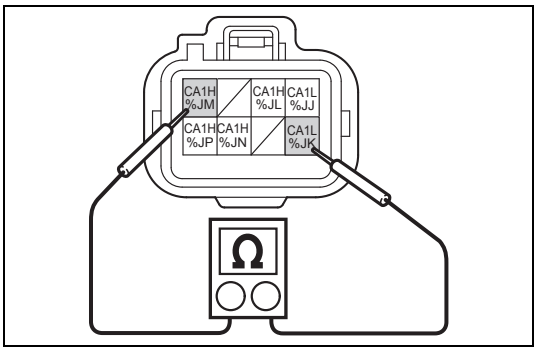


SAPH16ZZZ1100101

1. Set the starter switch to the "LOCK" position.
2. Disconnect the following controller connectors connected to the Diagnosis_CAN line (Leave the DCU and vehicle control ECU connected).
- Engine ECU
- Combination meter
3. Disconnect the No.30_J/C connector.
4. Use the electrical tester to measure the resistance between the terminals in the CAN H-line and L-line DCU side connector.

| Measurement conditions | Tester connections | Standard values |
|---|---|---|
| Starter switch: LOCK | No.30_J/C: CA1H(%JM) – CA1L(%JK) | 110 Ω – 130 Ω |

**Do the measurements meet the standard value?**

**YES**

**Connect the No.30_J/C connector, and go to step 2.**

**NO**

**CAN bus line disconnection or poor continuity between No. 30_J/C and the DCU.**
**Repair or replace the harness.**
**Perform After-inspection work. (Clear all past DTC. Check no DTC is stored after test drive.)**

| 2 | Check harness in CAN bus line between CAN_J/C3 High/Low and No. 30_J/C (malfunction part 4) |
|---|---|

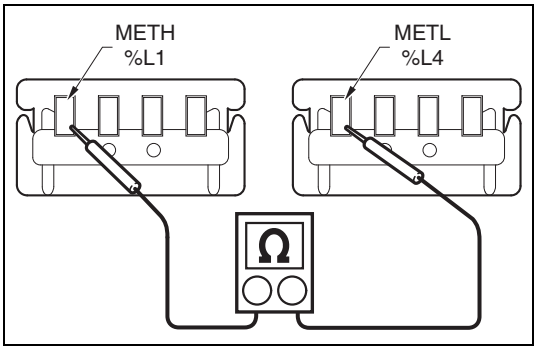


SAPH16ZZZ1100102

1. Disconnect the CAN_J/C3_High and Low connector.
2. Use the electrical tester to measure the resistance between the terminals in the CAN H-line and L-line on the No. 30_J/C side connector.

| Measurement conditions | Tester connections | Standard values |
|---|---|---|
| Starter switch: LOCK | CAN_J/C3_High: METH(%L1) – CAN_J/C3_Low: METL(%L4) | 110 Ω – 130 Ω |

**Do the measurements meet the standard value?**

**YES**

**Connect the CAN_J/C3_High·Low connector, and go to step 3.**

**NO**

**CAN bus line disconnection or poor continuity between CAN_J/C3 and No. 30_J/C**
**Repair or replace the harness.**
**Perform After-inspection work. (Clear all past DTC. Check no DTC is stored after test drive.)**

**3 Check harness in CAN bus line between CAN_J/C2 High/Low and CAN_J/C3 High/Low (malfunction parts 2 and 3)**

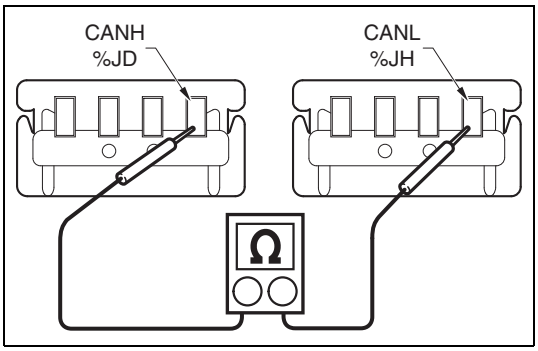

SAPH16ZZZ1100103

1. Disconnect the CAN_J/C2_High and Low connector.
2. Use the electrical tester to measure the resistance between the terminals in the CAN H-line and L-line on the CAN_J/C3 side connector.

| Measurement conditions | Tester connections | Standard values |
|---|---|---|
| Starter switch: LOCK | CAN_J/C2_High: CANH(%JD) – CAN_J/C2_Low: CANL(%JH) | 110 Ω – 130 Ω |

**Do the measurements meet the standard value?**

**YES**

**Go to step 4.**

**NO**

**CAN bus line disconnection or poor continuity between CAN_J/C2 and CAN_J/C3**
**Repair or replace the harness.**
**Perform After-inspection work. (Clear all past DTC. Check no DTC is stored after test drive.)**

| 4 | Check harness in CAN bus line between DLC(16P) and CAN_J/C3 High/Low (malfunction part 3 & 8) |
|---|---|

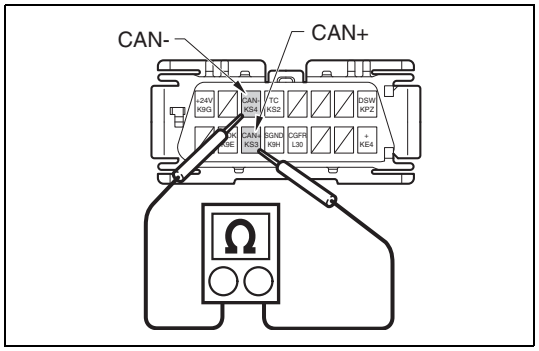


SAPH16ZZZ1100104

1. Use the electrical tester to measure the resistance between the DLC(16P) connector CAN H-line terminal and L-line terminal.

| Measurement conditions | Tester connections | Standard values |
|---|---|---|
| Starter switch: LOCK | DLC(16P) connector: CAN+(KS3) – CAN-(KS4) | 110 – 130 Ω |

**Do the measurements meet the standard value?**

**YES**

**Go to step 5.**

**NO**

**CAN bus line disconnection or poor continuity between DLC(16P) connector and CAN_J/C3 High-Low.**
**Repair or replace the harness.**
**Perform After-inspection work. (Clear all past DTC. Check no DTC is stored after test drive.)**

| 5 | Check harness in CAN bus line between CAN_J/C2 High/Low and the vehicle control ECU (malfunction part 1) |
|---|---|

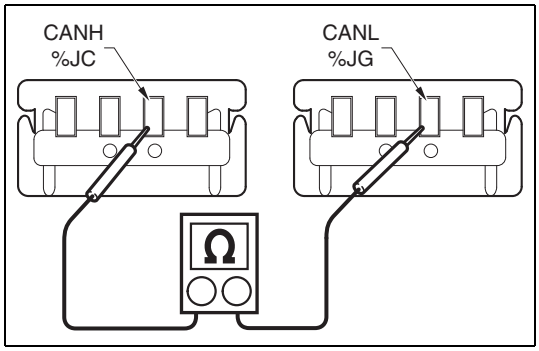

SAPH16ZZZ1100105

1. Use the electrical tester to measure the resistance between the terminals in the CAN H-line and L-line on the vehicle control ECU side connector.

| Measurement conditions | Tester connections | Standard values |
|---|---|---|
| Starter switch: LOCK | CAN_J/C2_High – CAN_J/C_Low CANH(%JC) – CANL(%JG) | 110 Ω – 130 Ω |

**Do the measurements meet the standard value?**

**YES**

**Procedure completed.**
**If another CAN communication system DTC is detected, refer to "CAN COMMUNICATION LINE MALFUNCTION PART DETERMINATION TABLE" , go to the diagnostic procedure for the detected DTC.**
**Perform After-inspection work. (Clear all past DTC. Check no DTC is stored after test drive.)**

**NO**

**CAN bus line disconnection or poor continuity between CAN_J/C2 and vehicle control ECU**
**Repair or replace the harness.**
**Perform After-inspection work. (Clear all past DTC. Check no DTC is stored after test drive.)**

# INSPECTION FOR SHORT-CIRCUIT IN DIAGNOSIS CAN H-LINE

EN01H16ZZZ110F03004006

| 1 | Check for short-circuit in CAN H-line between No.30 J/C and DCU (malfunction part 5) |
|---|---|

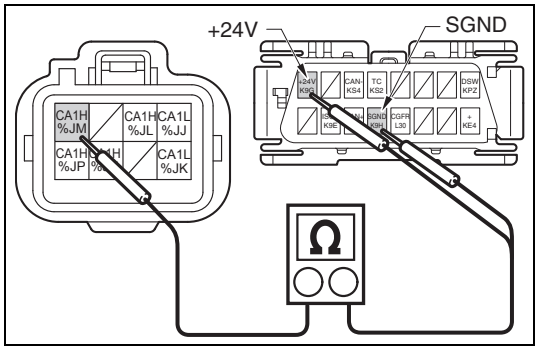


SAPH16ZZZ1100106

1. Set the starter switch to the "LOCK" position.
2. Disconnect the following controllers connected to the diagnosis CAN line.
- DCU(53P), Engine ECU
- Vehicle control ECU
3. Disconnect the No.30 J/C connector.
4. Use the electrical tester to check the continuity between the following terminals.
   (1) Between the CAN H-line CA1H(%JM) terminal in the DCU side connector and the +24V(K9G) terminal in the DLC(16P) connector.
   (2) Between the CAN H-line CA1H(%JM) terminal in the DCU side connector and the SGND(K9H) terminal in the DLC(16P) connector.

| Measurement conditions | Tester connections | Standard values |
|---|---|---|
| **Starter switch: LOCK** | **No.30 J/C – DLC(16P) connector CA1H(%JM) – +24V(K9G) CA1H(%JM) – SGND(K9H)** | **No Continuity** |

**Do the measurements meet the standard value?**

**YES**

**Go to step 2.**

**NO**

**Short +B/GND in CAN H-line between No.30 J/C and DCU.**
**Repair or replace the harness.**
**Perform After-inspection work. (Clear all past DTC. Check no DTC is stored after test drive.)**

| 2 | **Check for short-circuit in CAN H-line between CAN_J/C3 High and No. 30_J/C (malfunction part 4)** |
|---|---|

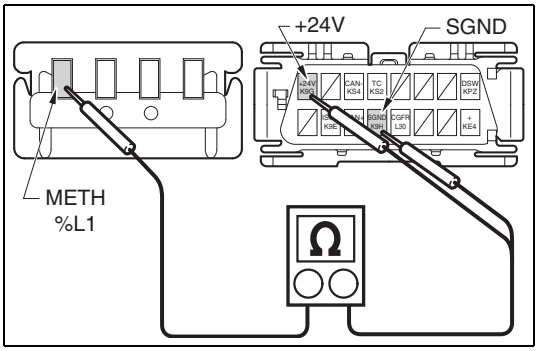

SAPH16ZZZ1100107

1. Disconnect the CAN_J/C3_High connector.
2. Use the electrical tester to check the continuity between the following terminals.
   (1) Between the CAN H-line METH(%L1) terminal in the No.30_J/C side connector and the +24V(K9G) terminal in the DLC(16P) connector.
   (2) Between the CAN H-line METH(%L1) terminal in the No.30_J/C side connector and the SGND(K9H) terminal in the DLC(16P) connector.

| Measurement conditions | Tester connections | Standard values |
|---|---|---|
| **Starter switch: LOCK** | **CAN_J/C3_High – DLC(16P) connector METH(%L1) – +24V(K9G) METH(%L1) – SGND(K9H)** | **No continuity** |

**Do the measurements meet the standard value?**

**YES**

**Connect the CAN_J/C3_High connector, and go to step 3.**

**NO**

**Short +B/GND in CAN H-line between CAN_J/C3 High and No. 30_J/C.**
**Repair or replace the harness.**
**Perform After-inspection work. (Clear all past DTC. Check no DTC is stored after test drive.)**

| 3 | Check for short-circuit in CAN H-line between CAN_J/C2 High and CAN_J/C3 (malfunction parts 2 & 3) |
|---|---|

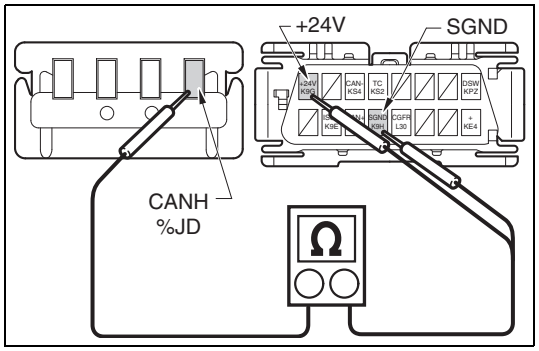

SAPH16ZZZ1100108

1. Disconnect the CAN_J/C3_High connector.
2. Use the electrical tester to check the continuity between the following terminals.
   (1) Between the CAN H-line CANH(%JD) terminal in the CAN_J/C3 High side connector and the +24V(K9G) terminal in the DLC(16P) connector.
   (2) Between the CAN H-line CANH(%JD) terminal in the CAN_J/C3 High side connector and the SGND(K9H) terminal in the DLC(16P) connector.

| Measurement conditions | Tester connections | Standard values |
|---|---|---|
| **Starter switch: LOCK** | **CAN_J/C2_High – DLC(16P) connector CANH(%JD) – +24V(K9G) CANH(%JD) – SGND(K9H)** | **No Continuity** |

**Do the measurements meet the standard value?**

**YES**

**Go to step 4.**

**NO**

**Short +B/GND in CAN H-line between CAN_J/C2 High and CAN_J/C3 High.**
**Repair or replace the harness.**
**Perform After-inspection work. (Clear all past DTC. Check no DTC is stored after test drive.)**

| 4 | Check for short-circuit in CAN H-line between DLC(16P) and CAN_J/C3 High (malfunction part 3 & 8) |
|---|---|

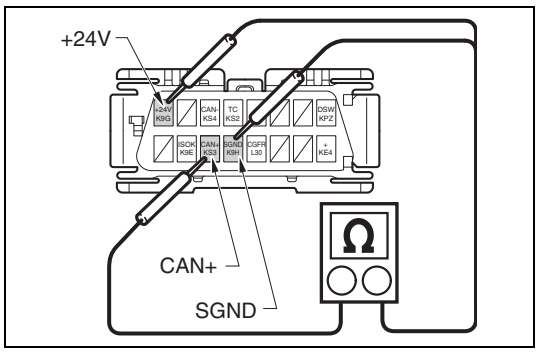

SAPH16ZZZ1100109

1. Use the electrical tester to check the continuity between the following terminals.
   (1) Between the CAN+(KS3) terminal and the +24V(K9G) terminal in the DLC(16P) connector.
   (2) Between the CAN+(KS3) terminal and the SGND(K9H) terminal in the DLC(16P) connector.

| Measurement conditions | Tester connections | Standard values |
|---|---|---|
| **Starter switch: LOCK** | **DLC(16P) connector CAN+(KS3) – +24V(K9G) CAN+(KS3) – SGND(K9H)** | **No continuity** |

**Do the measurements meet the standard value?**

**YES**

**Go to step 5.**

**NO**

**Short +B/GND in CAN H-line between DLC(16P) connector and CAN_J/C3 High.**
**Repair or replace the harness.**
**Perform After-inspection work. (Clear all past DTC. Check no DTC is stored after test drive.)**

## 5 Check for short-circuit in CAN H-line between CAN_J/C2 High and the vehicle control ECU (malfunction part 1)

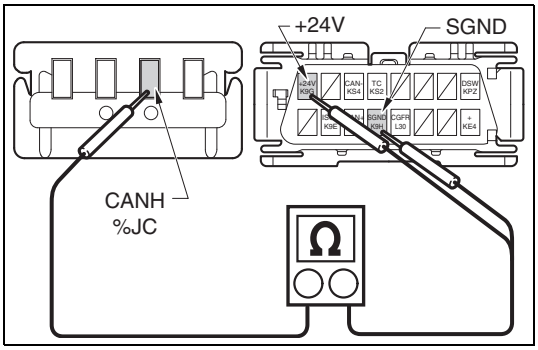

SAPH16ZZZ1100110

1. Use the electrical tester to check the continuity between the following terminals.
   (1) Between the CAN H-line CANH(%JC) terminal in the vehicle control ECU side connector and the +24V(K9G) terminal in the DLC(16P) connector.
   (2) Between the CAN H-line CANH(%JC) terminal in the vehicle control ECU side connector and the SGND(K9H) terminal in the DLC(16P) connector.

| Measurement conditions | Tester connections | Standard values |
|---|---|---|
| **Starter switch: LOCK** | **CAN_J/C2_High – DLC(16P) connector CANH(%JC) – +24V(K9G) CANH(%JC) – +SGND(K9H)** | **No continuity** |

**Do the measurements meet the standard value?**

**YES**

**Procedure completed.**
**If another CAN communication system DTC is detected, refer to "CAN COMMUNICATION LINE MALFUNCTION PART DETERMINATION TABLE" , go to the diagnostic procedure for the detected DTC.**
**Perform After-inspection work. (Clear all past DTC. Check no DTC is stored after test drive.)**

**NO**

**Short +B/GND in CAN H-line between CAN_J/C2 High and vehicle control ECU.**
**Repair or replace the harness.**
**Perform After-inspection work. (Clear all past DTC. Check no DTC is stored after test drive.)**

# INSPECTION FOR SHORT-CIRCUIT IN DIAGNOSIS CAN L-LINE

EN01H16ZZZ110F03004007

| 1 | Check for short-circuit for short-circuit in CAN L-line between No.30 J/C and DCU (malfunction parts 5) |
|---|---|

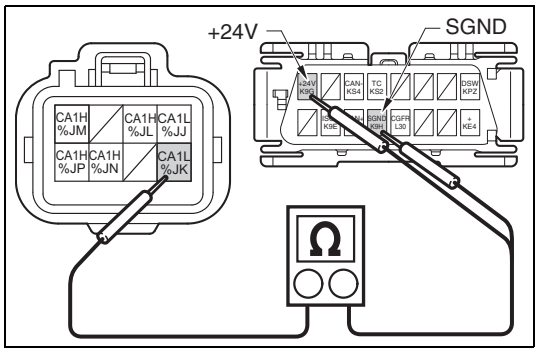


SAPH16ZZZ1100111

1. Set the starter switch to the "LOCK" position.
2. Disconnect the following controller connectors connected to the Engine_control/Diagnosis_CAN line.
- DCU(53P), engine ECU
- Combination meter, vehicle control ECU
3. Disconnect the No.30_J/C connector.
4. Use the electrical tester to check the continuity between the following terminals.
   (1) Between the CAN L-line CA1L(%JK) terminal in the DCU side connector and the +24V(K9G) terminal in the DLC(16P) connector.
   (2) Between the CAN L-line CA1L(%JK) terminal in the DCU side connector and the SGND(K9H) terminal in the DLC(16P) connector.

| Measurement conditions | Tester connections | Standard values |
|---|---|---|
| **Starter switch: LOCK** | **No.30_J/C: CA1L(%JK) – +24V(K9G) CA1L(%JK) – SGND(K9H)** | **No continuity** |

**Do the measurements meet the standard value?**

**YES**

**Go to step 2.**

**NO**

**CAN L-line +B/GND short-circuit between No. 30_J/C and the DCU.**
**Repair or replace the harness.**
**Perform After-inspection work. (Clear all past DTC. Check no DTC is stored after test drive.)**

| 2 | **Check for short-circuit in CAN L-line between CAN_J/C3 Low and No. 30_J/C (malfunction part 4)** |
|---|---|

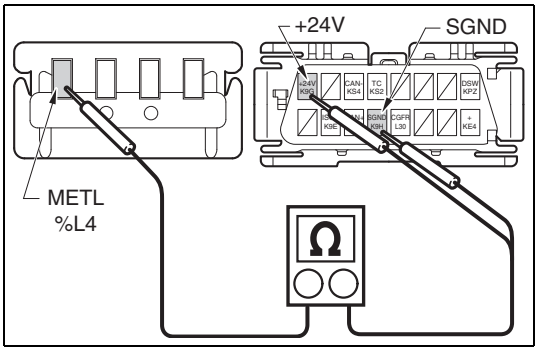

SAPH16ZZZ1100112

1. Disconnect the CAN_J/C3 Low connector.

2. Use the electrical tester to check the continuity between the following terminals.
   (1) Between the CAN L-line METL(%L4) terminal in the No.30_J/C side connector and the +24V(K9G) terminal in the DLC(16P) connector.
   (2) Between the CAN L-line METL(%L4) terminal in the No.30_J/C side connector and the SGND(K9H) terminal in the DLC(16P) connector.

| Measurement conditions | Tester connections | Standard values |
|---|---|---|
| **Starter switch: LOCK** | **CAN_J/C3_Low – DLC(16P) connector METL(%L4) – +24V(K9G) METL(%L4) – SGND(K9H)** | **No Continuity** |

**Do the measurements meet the standard value?**

**YES**

**Connect the CAN_J/C3 Low connector, and go to step 3.**

**NO**

**Short +B/GND in CAN L-line between CAN_J/C3 Low and No. 30_J/C.**
**Repair or replace the harness.**
**Perform After-inspection work. (Clear all past DTC. Check no DTC is stored after test drive.)**

| 3 | Check for short-circuit in CAN L-line between CAN_J/C2 Low and CAN_J/C3 Low (malfunction parts 2 & 3) |
|---|---|

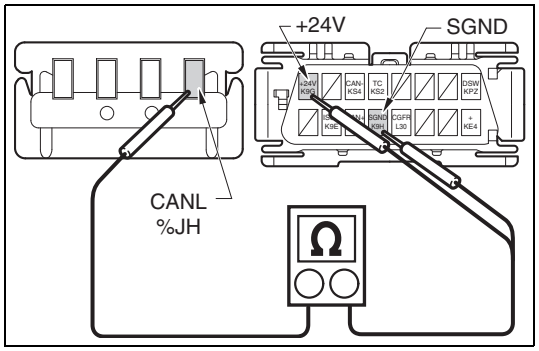

SAPH16ZZZ1100113

1. Disconnect the CAN_J/C2 Low connector.
2. Use the electrical tester to check the continuity between the following terminals.
   (1) Between the CAN L-line CANL(%JH) terminal in the CAN_J/C3 High side connector and the +24V(K9G) terminal in the DLC(16P) connector.
   (2) Between the CAN L-line CANL(%JH) terminal in the CAN_J/C3 High side connector and the SGND(K9H) terminal in the DLC(16P) connector.

| Measurement conditions | Tester connections | Standard values |
|---|---|---|
| **Starter switch: LOCK** | **CAN_J/C2_Low – DLC(16P) connector CANL(%JH) – +24V(K9G) CANL(%JH) – +SGND(K9H)** | **No continuity** |

**Do the measurements meet the standard value?**

**YES**

**Go to step 4.**

**NO**

**Short +B/GND in CAN L-line between CAN_J/C2 Low and CAN_J/C_3 Low.**
**Repair or replace the harness.**
**Perform After-inspection work. (Clear all past DTC. Check no DTC is stored after test drive.)**

| 4 | **Check for short-circuit for short-circuit in CAN L-line between DLC connector (16P) and CAN_J/C 3 Low (malfunction part 3 & 8)** |
|---|---|

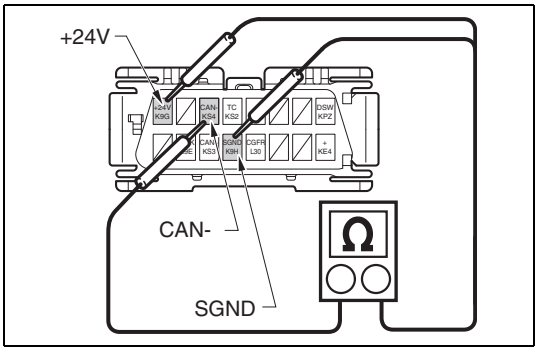


SAPH16ZZZ1100114

1. Use the electrical tester to check the continuity between the following terminals.
   (1) Between the CAN-(KS4) terminal and the +24V(K9G) terminal in the DLC(16P) connector.
   (2) Between the CAN-(KS4) terminal and the SGND(K9H) terminal in the DLC(16P) connector.

| Measurement conditions | Tester connections | Standard values |
|---|---|---|
| **Starter switch: LOCK** | **DLC(16P) connector CAN-(KS4) – +24V(K9G) CAN-(KS4) – SGND(K9H)** | **No continuity** |

**Do the measurements meet the standard value?**

**YES**

**Go to step 5.**

**NO**

**Short +B/GND in CAN L-line between DLC(16P) connector and CAN_J/C 3 Low.**
**Repair or replace the harness.**
**Perform After-inspection work. (Clear all past DTC. Check no DTC is stored after test drive.)**

| 5 | Check for short-circuit for short-circuit in CAN L-line between CAN_J/C2 Low and vehicle control ECU (malfunction part 1) |
|---|---|

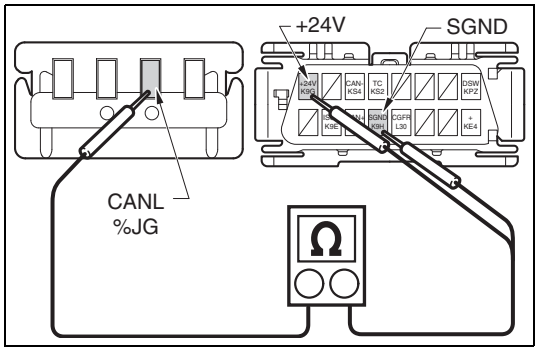


SAPH16ZZZ1100115

1. Use the electrical tester to check the continuity between the following terminals.
   (1) Between the CAN L-line CANL(%JG) terminal in the vehicle control ECU side connector and the +24V(K9G) terminal in the DLC(16P) connector.
   (2) Between the CAN L-line CANL(%JG) terminal in the vehicle control ECU side connector and the SGND(K9H) terminal in the DLC(16P) connector.

| Measurement conditions | Tester connections | Standard values |
|---|---|---|
| Starter switch: LOCK | CAN_J/C2_Low: CANL(%JG) – +24V(K9G) CANL(%JG) – SGND(K9H) | No continuity |

**Do the measurements meet the standard value?**

**YES**

**Procedure completed.**
**If another CAN communication system DTC is detected, refer to "CAN COMMUNICATION LINE MALFUNCTION PART DETERMINATION TABLE" , go to the diagnostic procedure for the detected DTC.**
**Perform After-inspection work. (Clear all past DTC. Check no DTC is stored after test drive.)**

**NO**

**Short +B/GND in CAN L-line between CAN_J/C2 Low and vehicle control ECU.**
**Repair or replace the harness.**
**Perform After-inspection work. (Clear all past DTC. Check no DTC is stored after test drive.)**

# INSPECTION FOR DCU CAN COMMUNICATION LINE (DIAGNOSIS CAN COMMUNICATION LINE)

EN01H16ZZZ110F03004008

| 1 | Inspect the connector |
|---|---|

1. Check the connection of the joint connector No.30_J/C and DCU connector (Looseness and poor contact).

**Was any failure found?**

YES

**Repair or replace the faulty part, and go to step 2.**

NO

**Connect securely, and go to step 2.**

| 2 | Check the DTC detected [HINO DX II ] |
|---|---|

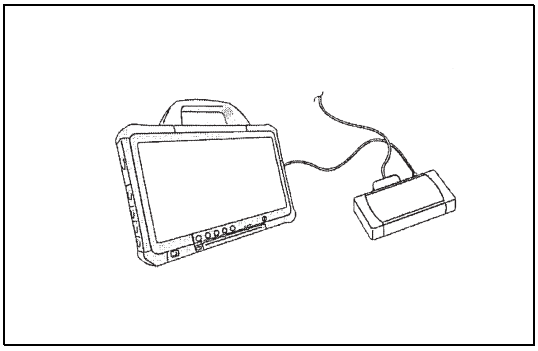

SAPH16ZZZ1100116

1. Set the starter switch to the "ON" position.
2. Select [DCU] and check if U0038 has been detected.

**Has DTC U0038 been detected?**

YES

**Go to step 3.**

NO

**Procedure completed.**
**Perform After-inspection work. (Clear all past DTC. Check no DTC is stored after test drive.)**

| 3 | Check harness in CAN H-line between No.30_J/C and DCU (malfunction part 5 of Diagnosis CAN line) |
|---|---|

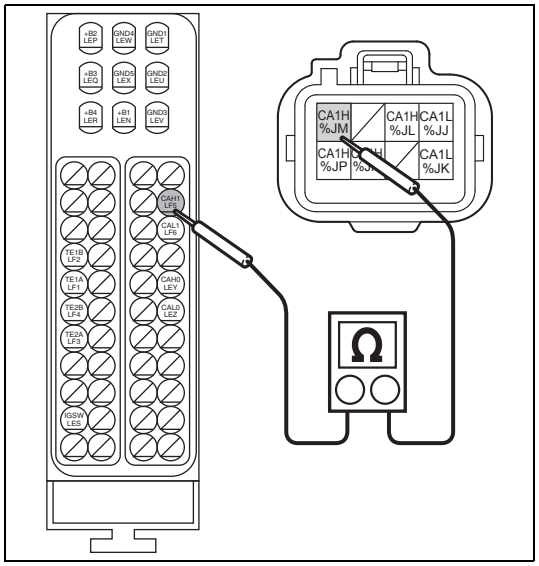


SAPH16ZZZ1100117

1. Set the starter switch to the "LOCK" position.
2. Disconnect the No.30_J/C and DCU 53P connector.
3. Use the electrical tester to measure the resistance between the No.30_J/C CA1H(%JM) terminal and the DCU 53P vehicle-side connector CA1H terminal.

| Measurement conditions | Tester connections | Standard values |
|---|---|---|
| **Starter switch: LOCK** | **No.30_J/C – DCU 53P vehicle-side connector CA1H (%JM) – CAH1** | **1 Ω or less** |

**Do the measurements meet the standard value?**

**YES**

**Go to step 4.**

**NO**

**Disconnection or poor continuity in CAN H-line between No.30_J/C and DCU. Repair or replace the harness.**
**Perform After-inspection work. (Clear all past DTC. Check no DTC is stored after test drive.)**

| 4 | Check harness in CAN L-line between No.30J/C and DCU (malfunction part 5 of Diagnosis CAN line) |
|---|---|

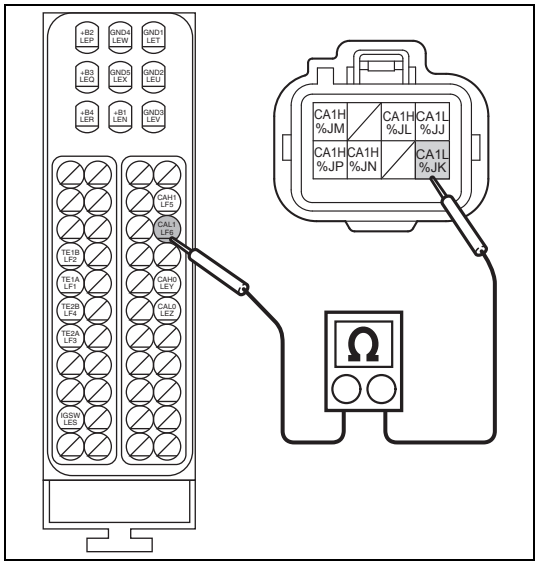


SAPH16ZZZ1100118

1. Use the electrical tester to measure the resistance between the No.30_J/C CA1L(%JK) terminal and each terminal of the DCU 53P vehicle-side connector CAL1 terminal.

| Measurement conditions | Tester connections | Standard values |
|---|---|---|
| **Starter switch: LOCK** | **No.30_J/C – DCU 53P vehicle-side connector CA1L(%JK) – CAL1** | **1 Ω or less** |

**Do the measurements meet the standard value?**

**YES**

**Go to step 5.**

**NO**

**Disconnection or poor continuity in CAN L-line between No.30_J/C and DCU. Repair or replace the harness.**
**Perform After-inspection work. (Clear all past DTC. Check no DTC is stored after test drive.)**

## 5 Check the DCU power supply

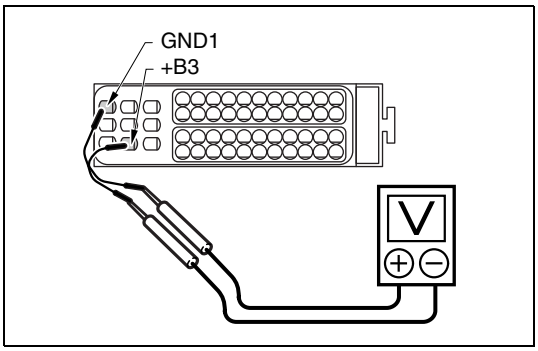


SAPH16ZZZ1100119

1. Connect the No.30_J/C and DCU 53P connector.
2. Set the starter switch to the "ON" position.
3. Connect the signal check harness and use the electrical tester to measure the voltage between the terminals of the DCU 53P vehicle-side connector.

| Measurement conditions | Tester connections | Standard values |
|---|---|---|
| Starter switch: ON | DCU 53P vehicle-side connector +B3 – GND1 | 9 – 16V |

**Do the measurements meet the standard value?**

**YES**

**Go to step 6.**

**NO**

**Check the DCU power supply circuit.**
**Perform After-inspection work. (Clear all past DTC. Check no DTC is stored after test drive.)**

| 6 | Inspect the DCU [HINO DX ll ] |
|---|---|

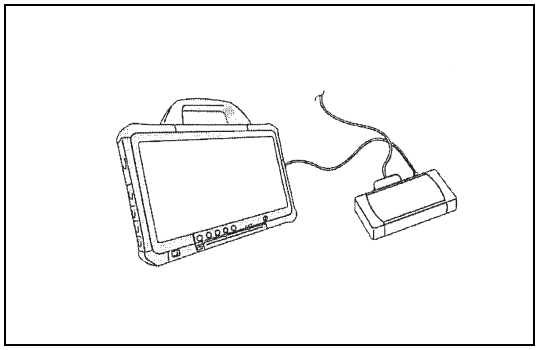

SAPH16ZZZ1100120

1. Set the starter switch to the "LOCK" position.
2. Connect the DCU 53P connector.
3. Set the starter switch to the "ON" position.
4. Select [DCU] and check if U0038 has been detected.

**Has DTC U0038 been detected?**

**YES**

**Replace the DCU.**
**Perform After-inspection work. (Clear all past DTC. Check no DTC is stored after test drive.)**

**NO**

**Procedure completed.**
**Perform After-inspection work. (Clear all past DTC. Check no DTC is stored after test drive.)**

# INSPECTION FOR ENGINE ECU CAN COMMUNICATION LINE

EN01H16ZZZ110F03004009

| 1 | Inspect the connector |
|---|---|

1. Check the connection of the joint connector No.30_J/C and engine ECU connector (Looseness and poor contact).

**Was any failure found?**

**YES**

**Repair or replace the faulty part, and go to step 2.**

**NO**

**Connect securely, and go to step 2.**

| 2 | Check the DTC detected [HINO DX II ] |
|---|---|

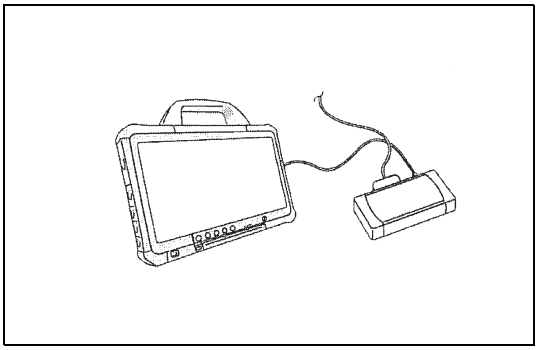

SAPH16ZZZ1100121

1. Set the starter switch to the "LOCK" position.
2. Connect the vehicle to HINO DX II .
3. Set the starter switch to the "ON" position.
4. Select [Engine] and check if the DTC (U1001 or U110A) has been detected.

**Has the DTC (U1001 or U110A) been detected?**

**YES**

**Go to step 3.**

**NO**

**Procedure completed.**
**Perform After-inspection work. (Clear all past DTC. Check no DTC is stored after test drive.)**

| 3 | Check for disconnection in CAN H-line between No. 30_J/C and engine ECU (malfunction part 6) |
|---|---|

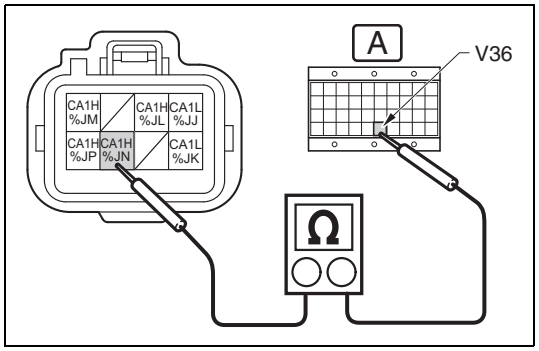

SAPH16ZZZ1100122

1. Set the starter switch to the "LOCK" position.
2. Disconnect the No.30_J/C connector.
3. Connect the signal check harness to the engine ECU vehicle-side connector (Do not connect harness to the ECU.).
4. Use the electrical tester to measure the resistance between the No.30_J/C CA1H(%JN) terminal and the V36(CA1H) terminal in the signal check harness (engine ECU).

| Measurement conditions | Tester connections | Standard values |
|---|---|---|
| **Starter switch: LOCK** | **No.30_J/C – signal check harness (Engine ECU) CA1H(%JN) – V36(CA1H)** | **1 Ω or less** |

**Do the measurements meet the standard value?**

**YES**

**Go to step 4.**

**NO**

**Disconnection or poor continuity in CAN H-line between No.30_J/C and engine ECU.**
**Repair or replace the wire harness.**
**Perform After-inspection work. (Clear all past DTC. Check no DTC is stored after test drive.)**

| 4 | Check for disconnection in CAN L-line between No. 30_J/C and engine ECU (malfunction part 6) |
|---|---|

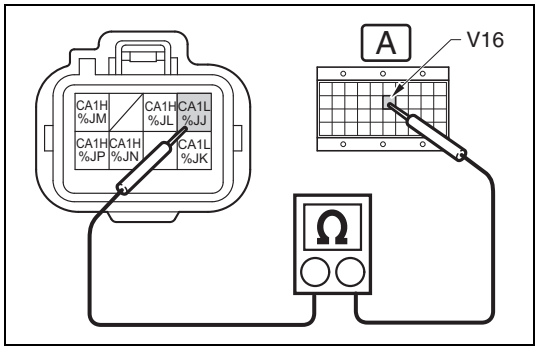

SAPH16ZZZ1100123

1. Use the electrical tester to measure the resistance between the No.30_J/C CA1L(%JJ) terminal and the V16(CA1L) terminal in the signal check harness (engine ECU).

| Measurement conditions | Tester connections | Standard values |
|---|---|---|
| **Starter switch: LOCK** | **No.30_J/C – signal check harness (Engine ECU) CA1L(%JJ) – V16(CA1L)** | **1 Ω or less** |

**Do the measurements meet the standard value?**

| YES | NO |
|---|---|
| **Go to step 5.** | **Disconnection or poor continuity in CAN L-line between No.30_J/C and engine ECU.<br>Repair or replace the wire harness.<br>Perform After-inspection work. (Clear all past DTC. Check no DTC is stored after test drive.)** |

| 5 | Check for short-circuit in CAN H-line between No.30_J/C and engine ECU (malfunction part 6) |
|---|---|

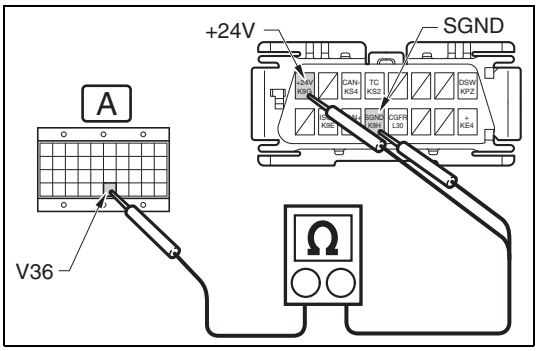

SAPH16ZZZ1100124

1. Use the electrical tester to check the continuity between the following terminals.
   (1) Between the V36(CA1H) terminal in the signal check harness (Engine ECU) and the +24V(K9G) terminal in the DLC(16P) connector.
   (2) Between the V36(CA1H) terminal in the signal check harness (Engine ECU) and the SGND(K9H) terminal in the DLC(16P) connector.

| Measurement conditions | Tester connections | Standard values |
|---|---|---|
| **Starter switch: LOCK** | **signal check harness (Engine ECU) – DLC(16P) connector<br>V36(CA1H) – +24V(K9G)<br>V36(CA1H) – SGND(K9H)** | **No Continuity** |

**Do the measurements meet the standard value?**

| YES | NO |
|---|---|
| **Go to step 6.** | **Short-circuit for CAN H-line +B/GND between No.30_J/C and engine ECU.<br>Repair or replace the wire harness.<br>Perform After-inspection work. (Clear all past DTC. Check no DTC is stored after test drive.)** |

| 6 | Check for short-circuit in CAN L-line between No.30_J/C and engine ECU (malfunction part 6) |
|---|---|

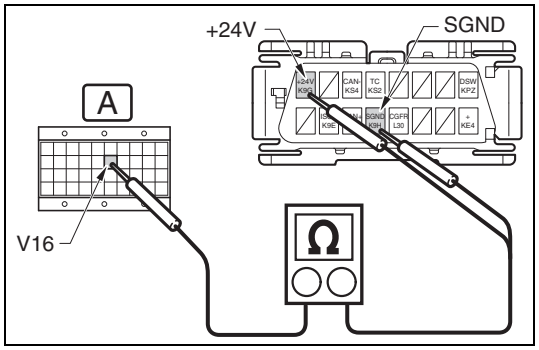


SAPH16ZZZ1100125

1. Use the electrical tester to check the continuity between the following terminals.
   (1) Between the V16(CA1L) terminal in the signal check harness (Engine ECU) and the +24V(K9G) terminal in the DLC(16P) connector.
   (2) Between the V16(CA1L) terminal in the signal check harness (Engine ECU) and the SGND(K9H) terminal in the DLC(16P) connector.

| Measurement conditions | Tester connections | Standard values |
|---|---|---|
| **Starter switch: LOCK** | **Signal check harness (Engine ECU) – DLC(16P) connector V16(CA1L) – +24V(K9G) V16(CA1L) – SGND(K9H)** | **No Continuity** |

**Do the measurements meet the standard value?**

**YES**

**Go to step 7.**

**NO**

**Short-circuit for CAN L-line +B/GND between No.30_J/C and engine ECU.**
**Repair or replace the wire harness.**
**Perform After-inspection work. (Clear all past DTC. Check no DTC is stored after test drive.)**

| 7 | Inspect the engine ECU [HINO DX II ] |
|---|---|

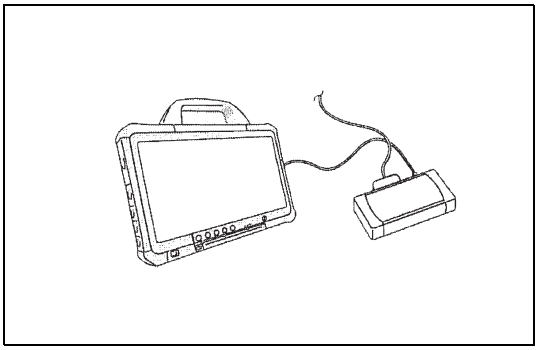

SAPH16ZZZ1100126

1. Connect the No.30_J/C and engine ECU connector.
2. Set the starter switch to the "ON" position.
3. Select [Engine] and check if DTC U1001 or U110A has been detected.

**Has DTC U1001 or U110A been detected?**

**YES**

**Replace the engine ECU.**
**Perform After-inspection work. (Clear all past DTC. Check no DTC is stored after test drive.)**

**NO**

**Procedure completed.**
**Perform After-inspection work. (Clear all past DTC. Check no DTC is stored after test drive.)**

# CONTROL CAN COMMUNICATION LINE

## ABNORMAL CAN COMMUNICATION DTC DETECTED

EN01H16ZZZ110F03005001

If any DTC of "CAN communication abnormal" is detected, carry out "PRE-INSPECTION FOR ENGINE CAN COMMUNICATION LINE" first.

## CONNECTION DIAGRAM (ALLISON AUTOMATIC TRANSMISSION)

EN01H16ZZZ110F03005002

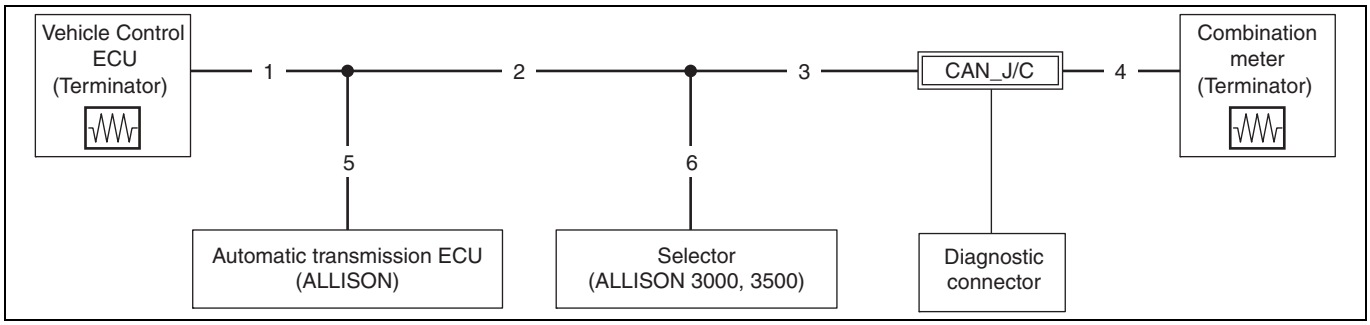


SAPH16ZZZ1100127

## CAN COMMUNICATION LINE MALFUNCTION PART DETERMINATION TABLE (ALLISON AUTOMATIC TRANSMISSION)

EN01H16ZZZ110F03005003

1. Vehicle control ECU

| Detected DTC | Estimated malfunction part | DTC diagnosis/inspection item |
|---|---|---|
| U0101, U0155 | 1, 2, 3, 4, 5 | • Pre-inspection for CAN communication line. |
| U0155 | 1, 2, 3, 4 | • Pre-inspection for CAN communication line. |
| • U0101<br>• No shift position is indicating on the multi-information indicator (combination meter). | 5 | • Inspection for automatic transmission ECU CAN communication line. |
| Indicate two or more "** indication is stopped" or "** abnormal" are indicated on the multi-information indicator (combination meter). | 1, 2, 3, 4, 5 | • Pre-inspection for CAN communication line. |

## CONNECTION DIAGRAM (MANUAL TRANSMISSION)

EN01H16ZZZ110F03005004

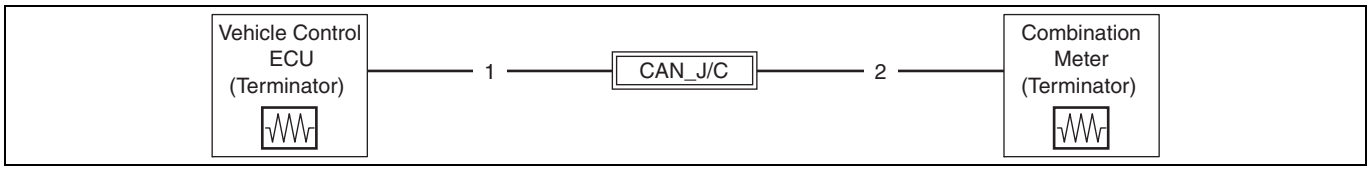


SAPH16ZZZ1100128

## CAN COMMUNICATION LINE MALFUNCTION PART DETERMINATION TABLE (MANUAL TRANSMISSION)

EN01H16ZZZ110F03005005

1. Vehicle control ECU

| Detected DTC | Estimated malfunction part | DTC diagnosis/inspection item |
|---|---|---|
| U0155 | 1, 2 | • Pre-inspection for CAN communication line. |
| Indicate two or more "** indication is stopped" or "** abnormal" are indicated on the multi-information indicator (combination meter). | 1, 2 | • Pre-inspection for CAN communication line. |

# PRE-INSPECTION FOR CAN COMMUNICATION LINE

EN01H16ZZZ110F03005006

| 1 | Inspect for +B/GND short-circuit in CAN H-line |
|---|---|

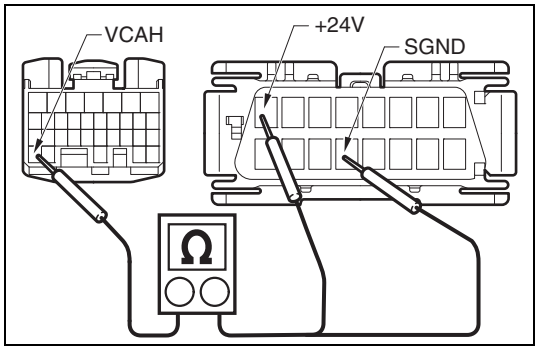

SAPH16ZZZ1100129

1. Set the starter switch to the "LOCK" position.
2. Disconnect the connectors of following controllers that connected to the control CAN line.
- Combination meter
- Vehicle control ECU
- AT ECU (ALLISON)
- SELECTOR (ALLISON 3000, 3500)

3. Use the electrical tester to check the continuity between the following terminals.
   (1) Between the VCAH (L8B) terminal in the vehicle control ECU vehicle-side connector (32P) and the +24V(K9G) terminal in the DLC(16P) connector.
   (2) Between the VCAH (L8B) terminal in the vehicle control ECU vehicle-side connector (32P) and the SGND (K9H) terminal in the DLC(16P) connector.

| Measurement conditions | Tester connections | Standard values |
|---|---|---|
| **Starter switch: LOCK** | **Vehicle control ECU vehicle-side connector (32P) – DLC(16P) connector<br>VCAH(L8B) – +24V(K9G)<br>VCAH(L8B) – SGND(K9H)** | **No Continuity** |

**Do the measurements meet the standard value?**

**YES**

**Go to step 2.**

**NO**

**Refer to "INSPECTION FOR SHORT-CIRCUIT FOR CAN H-line", and inspect the CAN bus line.**
**Perform After-inspection work. (Clear all past DTC. Check no DTC is stored after test drive.)**

| 2 | Inspect for +B/GND short-circuit in CAN L-line |
|---|---|

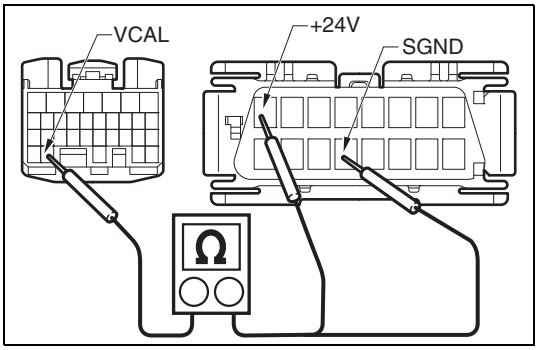

SAPH16ZZZ1100130

1. Use the electrical tester to check the continuity between the following terminals.
   (1) Between the VCAL(L8C) terminal in the vehicle control ECU vehicle-side connector(32P) and the +24V(K9G) terminal in the DLC(16P) connector.
   (2) Between the VCAL (L8C) terminal in the vehicle control ECU vehicle-side connector(32P) and the SGND(K9H) terminal in the DLC(16P) connector.

| Measurement conditions | Tester connections | Standard values |
|---|---|---|
| **Starter switch: LOCK** | **Vehicle control ECU vehicle-side connector(32P) – DLC(16P) connector VCAL(L8C) – +24V(K9G) VCAL(L8C) – SGND(K9H)** | **No Continuity** |

**Do the measurements meet the standard value?**

**YES**

**Go to step 3.**

**NO**

**Refer to "INSPECTION FOR SHORT-CIRCUIT FOR CAN L-LINE", and inspect the CAN bus line.**
**Perform After-inspection work. (Clear all past DTC. Check no DTC is stored after test drive.)**

## 3 Inspect the combination meter (Terminator)

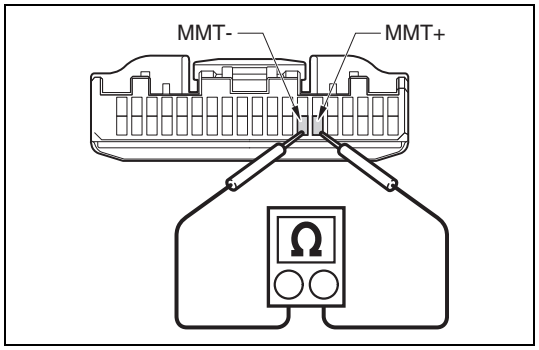

SAPH16ZZZ1100131

1. Use the electrical tester to measure the resistance between the terminals MMT+(E4L) and MMT-(E4M) in the combination meter combination meter side connector(40P).

| Measurement conditions | Tester connections | Standard values |
|---|---|---|
| Starter switch: LOCK | Combination meter combination meter side connector (40P) MMT+(E4L) – MMT-(E4M) | 120 Ω ± 10 Ω |

**Do the measurements meet the standard value?**

**YES**

**Go to step 4.**

**NO**

**Replace the combination meter.**
**Perform After-inspection work. (Clear all past DTC. Check no DTC is stored after test drive.)**

## 4 Inspect the vehicle control ECU (Terminator)

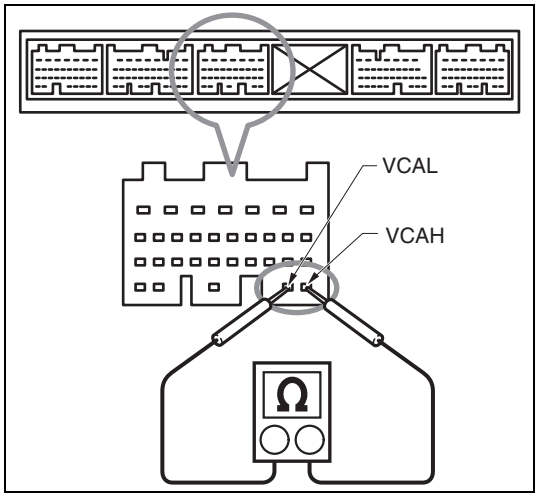

SAPH16ZZZ1100132

1. Use the electrical tester to measure the resistance between the terminals VCAH(L8B) and VCAL(L8C) in the vehicle control ECU vehicle control ECU side connector.

| Measurement conditions | Tester connections | Standard values |
|---|---|---|
| Starter switch: LOCK | Vehicle control ECU side connector: VCAH(L8B) – VCAL(L8C) | 120 Ω ± 10 Ω |

**Do the measurements meet the standard value?**

**YES**

**Go to step 5.**

**NO**

**Replace the vehicle control ECU.**
**Perform After-inspection work. (Clear all past DTC. Check no DTC is stored after test drive.)**

| 5 | Inspect for the resistance of CAN line |
|---|---|

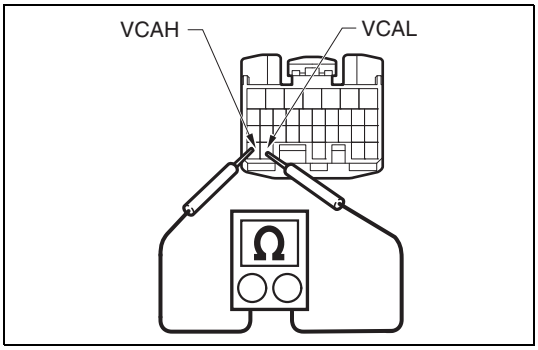


SAPH16ZZZ1100133

1. Connect the connectors of the combination meter and the vehicle control ECU.

2. Use the electrical tester to measure the resistance between the terminals VCAH(L8B) and VCAL(L8C) of the vehicle control ECU vehicle-side connector(32P).

| Measurement conditions | Tester connections | Standard values |
|---|---|---|
| **Starter switch: LOCK** | **Vehicle control ECU vehicle-side connector(32P) VCAH(L8B) – VCAL(L8C)** | **45 – 75 Ω** |

**Do the measurements meet the standard value?**

**YES**

**Procedure completed.**
**Refer to "CAN COMMUNICATION LINE MALFUNCTION PART DETERMINATION TABLE" (for Allison automatic transmission , for Manual transmission), and inspect detected DTC or Malfunction symptom.**
**Perform After-inspection work. (Clear all past DTC. Check no DTC is stored after test drive.)**

**NO**

**Refer to "DISCONNECTION INSPECTION FOR CAN H-line COMMUNICATION" , and inspect the CAN bus line.**
**Perform After-inspection work. (Clear all past DTC. Check no DTC is stored after test drive.)**

# DISCONNECTION INSPECTION FOR CAN_H/L_COMMUNICATION LINE

EN01H16ZZZ110F03005007

| 1 | **Inspect for disconnection in the CAN bus line between the CAN_J/C and the vehicle control ECU. (Automatic transmission: malfunction part 1, 2, 3. Manual transmission: malfunction part 1)** |
|---|---|

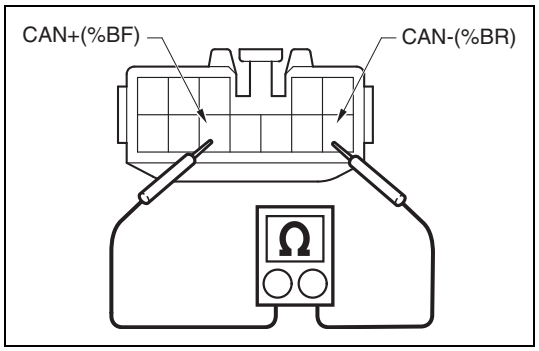


SAPH16ZZZ1100134

1. Set the starter switch to the "LOCK" position.
2. Disconnect the connectors of following controllers that connected to the control CAN line. (Leave the combination meter and vehicle control ECU connected.).
- AT ECU (ALLISON)
- SELECTOR (ALLISON 3000, 3500)
3. Disconnect the CAN_J/C connector.
4. Use the electrical tester to measure the resistance between the terminals CAN+(%BF) (CAN H-line) and CAN-(%BR) (CAN L-line) in the vehicle control ECU side connector of the CAN_J/C.

| Measurement conditions | Tester connections | Standard values |
|---|---|---|
| **Starter switch: LOCK** | **CAN_J/C: CAN+(%BF) – CAN-(%BR)** | **110 Ω – 130 Ω** |

**Do the measurements meet the standard value?**

**YES**

**Go to step 2.**

**NO**

**Disconnection or poor continuity in the CAN bus line between the CAN_J/C and the vehicle control ECU.**
**Repair or replace the wire harness.**
**Perform After-inspection work. (Clear all past DTC. Check no DTC is stored after test drive.)**

| 2 | **Inspect for disconnection in the CAN bus line between the CAN_J/C and the combination meter. (Automatic transmission: malfunction part 4. Manual transmission: malfunction part 2)** |
|---|---|

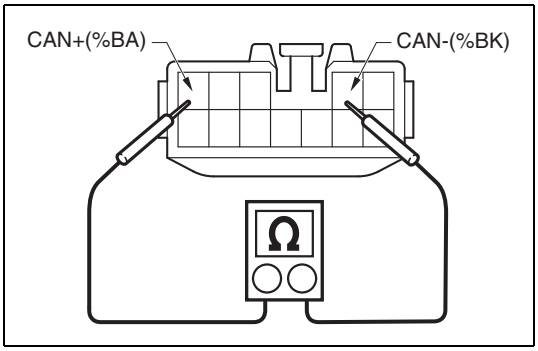


SAPH16ZZZ1100135

1. Use the electrical tester to measure the resistance between the terminals CAN+(%BA) (CAN H-line) and CAN-(%BK) (CAN L-line) in the vehicle control ECU side connector of the CAN_J/C.

| Measurement conditions | Tester connections | Standard values |
|---|---|---|
| **Starter switch: LOCK** | **CAN_J/C: CAN+(%BA) – CAN-(%BK)** | **110 Ω – 130 Ω** |

**Do the measurements meet the standard value?**

**YES**

**Automatic transmission: Go to step 3.**
**Manual transmission: Connect all connectors that disconnected, and check DTC again.**
**Perform After-inspection work. (Clear all past DTC. Check no DTC is stored after test drive.)**

**NO**

**Disconnection or poor continuity in the CAN bus line between the CAN_J/C and the combination meter.**
**Repair or replace the wire harness.**
**Perform After-inspection work. (Clear all past DTC. Check no DTC is stored after test drive.)**

| 3 | **Inspect for disconnection of the CAN bus line between the automatic transmission ECU and the vehicle control ECU. (Automatic transmission: malfunction part 5.)** |
|---|---|

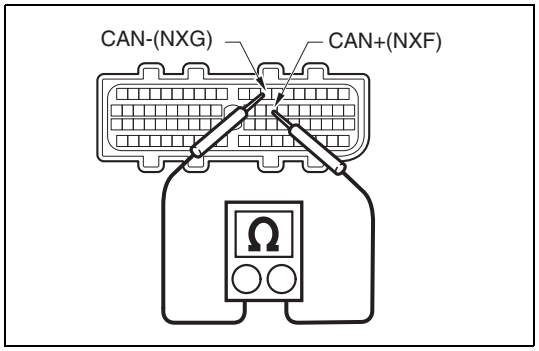


SAPH16ZZZ1100136

1. Use the electrical tester to measure the resistance between the terminals CAN+(NXF) (CAN H-line) and CAN-(NXG) (CAN L-line) in the vehicle-side connector of the automatic transmission ECU.

| Measurement conditions | Tester connections | Standard values |
|---|---|---|
| Starter switch: LOCK | Automatic transmission ECU: CAN+(NXF) – CAN-(NXG) | 110 Ω – 130 Ω |

**Do the measurements meet the standard value?**

**YES**

**Procedure completed.**
**If any other DTC related to CAN communication is detected, refer to "CAN COMMUNICATION LINE MALFUNCTION PART DETERMINATION TABLE" , and inspect the detected DTC.**
**Perform After-inspection work. (Clear all past DTC. Check no DTC is stored after test drive.)**

**NO**

**Disconnection or poor continuity in the CAN bus line between the automatic transmission ECU and the vehicle control ECU.**
**Repair or replace the wire harness.**
**Perform After-inspection work. (Clear all past DTC. Check no DTC is stored after test drive.)**

# INSPECTION FOR SHORT-CIRCUIT IN CAN H-LINE

EN01H16ZZZ110F03005008

| 1 | **Inspect for short-circuit in CAN H-line between CAN_J/C and vehicle control ECU. (Automatic transmission: malfunction part 1, 2, 3, 5, 6. Manual transmission: malfunction part 1)** |
|---|---|

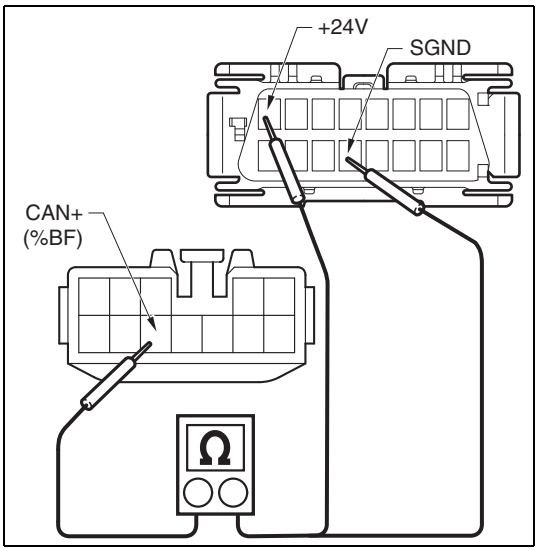


SAPH16ZZZ1100137

1. Set the starter switch to the "LOCK" position.
2. Disconnect the connectors of following controllers that connected to the control CAN line.
- Combination meter
- Vehicle control ECU
- AT ECU (ALLISON)
- SELECTOR (3000, 3500)
3. Disconnect the CAN_J/C connector.
4. Use the electrical tester to check the continuity between the following terminals.
   (1) Between the CAN+(%BF) terminal in the CAN_J/C connector vehicle control ECU side and +24V(K9G) terminal in the DLC(16P) connector.
   (2) Between the CAN+(%BF) terminal in the CAN_J/C connector vehicle control ECU side and SGND(K9H) terminal in the DLC(16P) connector.

| Measurement conditions | Tester connections | Standard values |
|---|---|---|
| **Starter switch: LOCK** | **CAN_J/C vehicle control ECU side connector – DLC(16P) connector CAN+(%BF) – +24V(K9G) CAN+(%BF) – SGND(K9H)** | **No Continuity** |

**Do the measurements meet the standard value?**

**YES**

**Go to step 2.**

**NO**

**Short-circuit in CAN H-line +B/GND between CAN_J/C and vehicle control ECU.**
**Repair or replace the wire harness.**
**Perform After-inspection work. (Clear all past DTC. Check no DTC is stored after test drive.)**

| 2 | **Inspect for short-circuit in CAN H-line between CAN_J/C and combination meter. (Automatic transmission: malfunction part 4. Manual transmission: malfunction part 2)** |
|---|---|

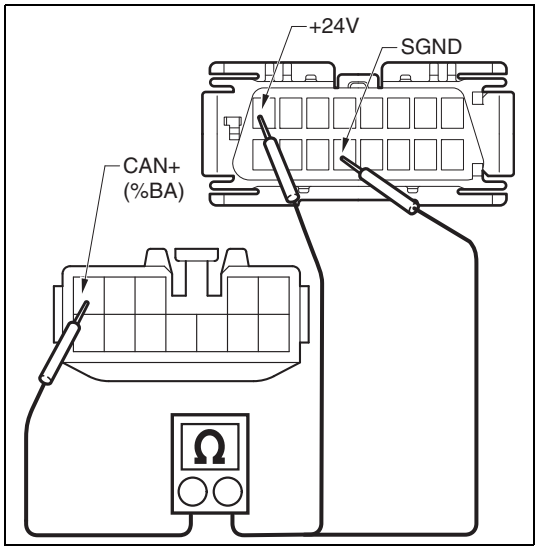

SAPH16ZZZ1100138

1. Use the electrical tester to check the continuity between the following terminals.
   (1) Between the CAN+(%BA) terminal in the CAN_J/C connector combination meter side and +24V(K9G) terminal in the DLC(16P) connector.
   (2) Between the CAN+(%BA) terminal in the CAN_J/C connector combination meter side and SGND(K9H) terminal in the DLC(16P) connector.

| Measurement conditions | Tester connections | Standard values |
|---|---|---|
| **Starter switch: LOCK** | **CAN_J/C connector combination meter side – DLC(16P) connector CAN+(%BA) – +24V(K9G) CAN+(%BA) – SGND(K9H)** | **No Continuity** |

**Do the measurements meet the standard value?**

**YES**

**Procedure completed.**
**If any other DTC related to CAN communication is detected, refer to "CAN COMMUNICATION LINE MALFUNCTION PART DETERMINATION TABLE" , and inspect the detected DTC.**
**Perform After-inspection work. (Clear all past DTC. Check no DTC is stored after test drive.)**

**NO**

**Short-circuit in CAN H-line +B/GND between CAN_J/C and vehicle control ECU.**
**Repair or replace the wire harness.**
**Perform After-inspection work. (Clear all past DTC. Check no DTC is stored after test drive.)**

# INSPECTION FOR SHORT-CIRCUIT IN CAN L-LINE

EN01H16ZZZ110F03005009

| 1 | **Inspect for short-circuit in CAN L-line between CAN_J/C and vehicle control ECU. (Automatic transmission: malfunction part 1, 2, 3, 5, 6. Manual transmission: malfunction part 1)** |
|---|---|

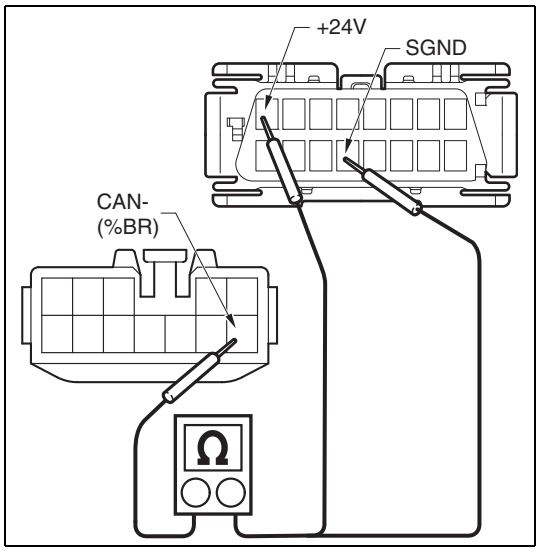


SAPH16ZZZ1100139

1. Set the starter switch to the "LOCK" position.
2. Disconnect the connectors of following controllers that connected to the control CAN line.
- Combination meter
- Vehicle control ECU
- AT ECU (ALLISON)
- SELECTOR (ALLISON 3000, 3500)

3. Disconnect the CAN_J/C connector.
4. Use the electrical tester to check the continuity between the following terminals.
   (1) Between the CAN-(%BR) terminal in the CAN_J/C connector vehicle control ECU side and +24V(K9G) terminal in the DLC(16P) connector.
   (2) Between the CAN-(%BR) terminal in the CAN_J/C connector vehicle control ECU side and SGND(K9H) terminal in the DLC(16P) connector.

| Measurement conditions | Tester connections | Standard values |
|---|---|---|
| **Starter switch: LOCK** | **CAN_J/C vehicle control ECU side connector – DLC(16P) connector CAN-(%BR) – +24V(K9G) CAN-(%BR) – SGND(K9H)** | **No Continuity** |

**Do the measurements meet the standard value?**

**YES**

**Go to step 2.**

**NO**

**Short-circuit in CAN H-line TB/GND between CAN_J/C and vehicle control ECU.**
**Repair or replace the wire harness.**
**Perform After-inspection work. (Clear all past DTC. Check no DTC is stored after test drive.)**

| 2 | **Inspect for short-circuit in CAN L-line between CAN_J/C and combination meter. (Automatic transmission: malfunction part 4. Manual transmission: malfunction part 2)** |
|---|---|

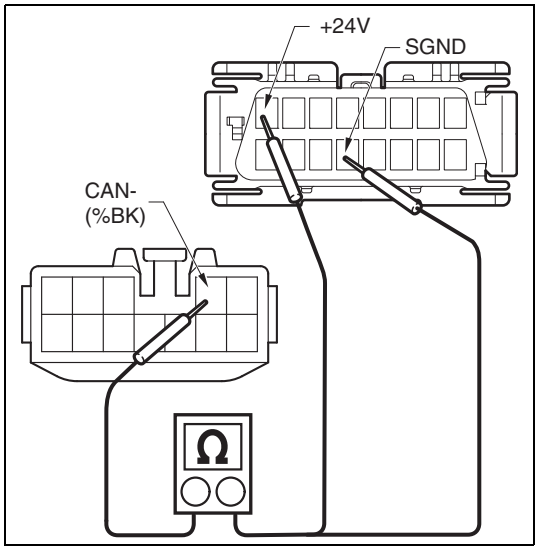

SAPH16ZZZ1100140

1. Use the electrical tester to check the continuity between the following terminals.
   (1) Between the CAN-(%BK) terminal in the CAN_J/C connector combination meter side and +24V(K9G) terminal in the DLC(16P) connector.
   (2) Between the CAN-(%BK) terminal in the CAN_J/C connector combination meter side and SGND(K9H) terminal in the DLC(16P) connector.

| Measurement conditions | Tester connections | Standard values |
|---|---|---|
| **Starter switch: LOCK** | **CAN_J/C connector combination meter side – DLC(16P) connector CAN-(%BK) – +24V(K9G) CAN-(%BK) – SGND(K9H)** | **No Continuity** |

**Do the measurements meet the standard value?**

**YES**

**Procedure completed.**
**If any other DTC related to CAN communication is detected, refer to "CAN COMMUNICATION LINE MALFUNCTION PART DETERMINATION TABLE" , and inspect the detected DTC.**
**Perform After-inspection work. (Clear all past DTC. Check no DTC is stored after test drive.)**

**NO**

**Short-circuit in CAN L-line +B/GND between the CAN_J/C and the vehicle control ECU.**
**Repair or replace the wire harness.**
**Perform After-inspection work. (Clear all past DTC. Check no DTC is stored after test drive.)**

# INSPECTION FOR AUTOMATIC TRANSMISSION ECU CAN COMMUNICATION LINE

EN01H16ZZZ110F03005010

| 1 | **Inspect for disconnection in CAN H-line between automatic transmission ECU (ALLISON) and vehicle control ECU. (Automatic transmission: malfunction part 5)** |
|---|---|

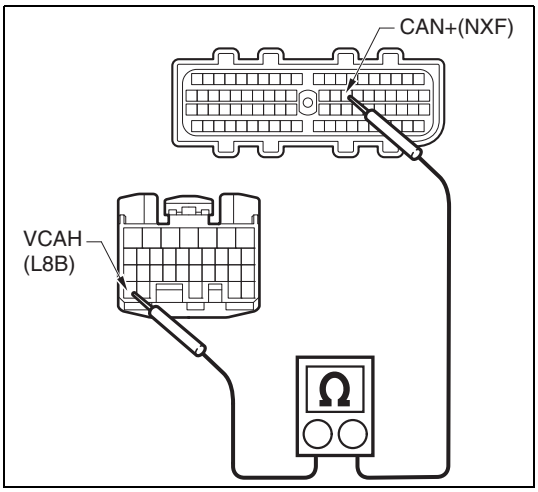

SAPH16ZZZ1100141

1. Set the starter switch to the "LOCK" position.
2. Disconnect the connectors of vehicle control ECU and automatic transmission ECU.
3. Use the electrical tester to measure the resistance between the VCAH(L8B) terminal in the vehicle control ECU vehicle-side connector(53P) and the CAN+(NXF) terminal in the automatic transmission ECU vehicle-side connector.

| Measurement conditions | Tester connections | Standard values |
|---|---|---|
| **Starter switch: LOCK** | **Vehicle control ECU vehicle-side connector(53P) – Automatic transmission ECU vehicle-side connector VCAH(L8B) – CAN+(NXF)** | **Less than 1 Ω** |

**Do the measurements meet the standard value?**

**YES**

**Go to step 2.**

**NO**

**Disconnection or poor continuity in CAN H-line between automatic transmission ECU and vehicle control ECU.**
**Repair or replace the wire harness.**
**Perform After-inspection work. (Clear all past DTC. Check no DTC is stored after test drive.)**

| 2 | **Inspect for disconnection in CAN L-line between automatic transmission ECU (ALLISON) and vehicle control ECU. (Automatic transmission: malfunction part 5)** |
|---|---|

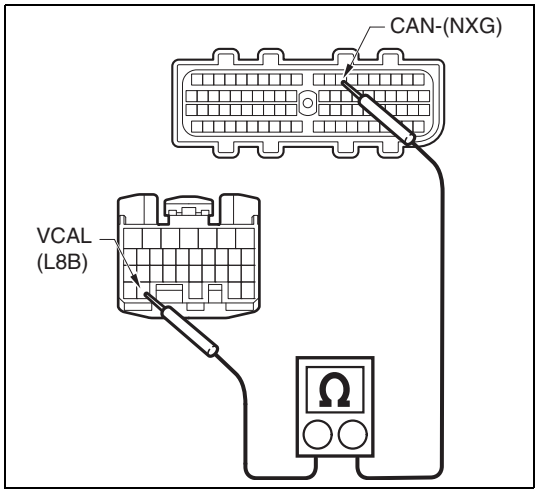

SAPH16ZZZ1100142

1. Use the electrical tester to measure the resistance between the VCAL(L8C) terminal in the vehicle control ECU vehicle-side connector(53P) and the CAN+(NXG) terminal in the automatic transmission ECU vehicle-side connector.

| Measurement conditions | Tester connections | Standard values |
|---|---|---|
| **Starter switch: LOCK** | **Vehicle control ECU vehicle-side connector(53P) – Automatic transmission ECU vehicle-side connector VCAL(L8C) – CAN-(NXG)** | **Less than 1 Ω** |

**Do the measurements meet the standard value?**

**YES**

**Replace the automatic transmission ECU.**
**Perform After-inspection work. (Clear all past DTC. Check no DTC is stored after test drive.)**

**NO**

**Disconnection or poor continuity in CAN L-line between automatic transmission ECU and vehicle control ECU.**
**Repair or replace the wire harness.**
**Perform After-inspection work. (Clear all past DTC. Check no DTC is stored after test drive.)**

**Hino Motors Sales U.S.A., Inc.**
**41180 Bridge Street, Novi, MI 48375**
**Telephone: (248) 699-9300**
**PRINTED IN JAPAN**

**Pub.No. S7-UNAE14A 3/3 '16. 10**

MENU

# FOREWORD

This workshop manual has been prepared to provide information regarding repair procedures on Hino Trucks.

Applicable for HINO 238, 258LP, 268, 338, 358 series, equipped with J08E-VB and J08E-WU engine

When making any repairs on your vehicle, be careful not to be injured through improper procedures.
As for maintenance items, refer to the Driver's / Owner's Manual.
All information and specifications in this manual are based upon the latest product information available at the time of printing.
Hino Motors Sales U.S.A., Inc. reserves the right to make changes at any time without prior notice.

Please note that the publications below have also been prepared as relevant workshop manuals for the components and systems in these vehicles.

| Manual Name | Pub. No. |
|---|---|
| Chassis Workshop Manual | S1-UNAE14A 2/2 |
| J08E-VB, WU Engine Workshop Manual | S5-UJ08E14A |
| Trouble Shooting Workshop Manual | S7-UNAE14A 1/3<br>S7-UNAE14A 2/3<br>S7-UNAE14A 3/3 |

**Hino Motors Sales U.S.A. , Inc.**

# CHAPTER REFERENCES REGARDING THIS WORKSHOP MANUAL

Use this chart to the appropriate chapter numbers for servicing your particular vehicle.

| CHAPTER | | | |
|---|---|---|---|
| | MANUAL NO. | S1-UNAE14A 1/2 (U.S.A.), S1-CNAE14A 1/2 (CANADA) | |
| | MODELS | HINO 238, 258LP, 268, 338, 358 | |
| | Production Model Code | NE8J, NF8J, NJ8J, NV8J, NH8J | |
| GENERAL INTRODUCTION | | GN02-001 | |
| CLUTCH MAIN UNIT | | CL02-001 | |
| CLUTCH CONTROL | | CL03-001 | |
| TRANSMISSION MAIN UNIT | | TR02-001 | |
| AUTOMATIC TRANSMISSION | | TR04-001 | TR04-002 |
| TRANSMISSION/TRANSFER CONTROL | | TR06-001 | TR06-002 |
| PROPELLER SHAFT | | PP02-001 | |
| DIFFERENTIAL CARRIER | | DF02-001 | |
| BRAKE EQUIPMENT | | BR01-001 | BR01-002 |
| SERVICE BRAKE | | BR02-001 | BR02-002 |
| ABS (ANTI-LOCK BRAKE SYSTEM) | | BR03-001 | BR03-002 |
| EXHAUST BRAKE | | BR05-001 | |
| PARKING BRAKE | | BR07-001 | |
| STEERING EQUIPMENT | | SR01-001 | |
| STEERING UNIT | | SR02-001 | |
| POWER STEERING | | SR03-001 | |
| FRONT AXLE | | AX02-001 | |
| REAR AXLE | | AX03-001 | |
| WHEEL & TIRE | | AX04-001 | |
| SUSPENSION | | SU02-001 | |
| CHASSIS FRAME | | FC02-001 | |
| CAB | | CA02-001 | |
| ELECTRICAL EQUIPMENT | | EL01-001 | |
| ELECTRIC WIRE | | EL02-001 | |

This manual does not contain items on half-tone dot meshing.

HINO

# WORKSHOP MANUAL

INDEX: CHASSIS GROUP 1/4


GENERAL INTRODUCTION

CLUTCH EQUIPMENT

CLUTCH MAIN UNIT

CLUTCH CONTROL

TRANSMISSION EQUIPMENT

TRANSMISSION MAIN UNIT

TRANSFER MAIN UNIT

AUTOMATIC TRANSMISSION

PTO (POWER TAKE-OFF)

TRANSMISSION / TRANSFER CONTROL

PROPELLER SHAFT EQUIPMENT

PROPELLER SHAFT

DIFFERENTIAL EQUIPMENT

DIFFERENTIAL CARRIER

BRAKE EQUIPMENT

SERVICE BRAKE

ABS

INDEX: CHASSIS GROUP 2/4


ES START (EASY & SMOOTH START) SYSTEM

EXHAUST BRAKE

RETARDER BRAKE

PARKING BRAKE

STEERING EQUIPMENT

STEERING UNIT

POWER STEERING

AXLE EQUIPMENT

FRONT AXLE

REAR AXLE

WHEEL & TIRE

SUSPENSION EQUIPMENT

SUSPENSION

CHASSIS EQUIPMENT

CHASSIS FRAME

COUPLER (5TH WHEEL)

PINTLE HOOK

INDEX: CHASSIS GROUP 3/4


| | |
|---|---|
| CAB EQUIPMENT | |
| CAB | |
| ELECTRICAL EQUIPMENT | |
| ELECTRIC WIRE | |
| HYBRID SYSTEM | |

INDEX: CHASSIS GROUP 4/4


| | |
|---|---|
| ENGINE CONTROL | |
| FUEL CONTROL | |
| BRAKE CONTROL | |
| SUSPENSION CONTROL | |
| CAB EQUIPMENT CONTROL | |
| OTHERS | |

# GENERAL INTRODUCTION (CHASSIS) GN02-001

**GENERAL INTRODUCTION.....GN02-2**
GENERAL PRECAUTIONS.....GN02-2
IDENTIFICATION INFORMATION.....GN02-5
HOW TO USE
THIS WORKSHOP MANUAL.....GN02-13
PRECAUTIONS.....GN02-16
SEALANT ON THE TAPERED SCREW
FOR PIPING.....GN02-19
NYLON TUBE REPLACEMENT METHOD ...GN02-20
METRIC INFORMATION.....GN02-22
SPECIFIED TORQUE
FOR STANDARD BOLTS AND NUTS.....GN02-24
SPECIFIED TORQUE
FOR FLANGE BOLTS AND NUTS.....GN02-24
RECOMMENDED LUBRICANTS.....GN02-26
VEHICLE LIFT
AND SUPPORT LOCATIONS.....GN02-28
INFORMATION DISPLAY.....GN02-30
SYMPTOM SIMULATION.....GN02-35
GLOSSARY..... GN02-37
GLOSSARY OF SAE AND HINO TERMS.....GN02-40

# GENERAL INTRODUCTION

## GENERAL PRECAUTIONS

EN00Z08020100001

Some recommended and standard maintenance services for your vehicle are included in this section. When performing maintenance on your vehicle be careful not to get injured by improper work. Improper or incomplete work can cause a malfunction of the vehicle which may result in personal injury and/or property damage. If you have any question about performing maintenance, please consult your Hino dealer.

| WARNING |
|---|
| **When working on your vehicle, observe the following general precautions to prevent death, personal injury and/or property damage in addition to the particular DANGERS, WARNINGS, CAUTIONS and NOTICES in each chapter.**<br><br>• **Always wear safety glasses or goggles to protect your eyes.**<br>• **Remove rings, watches, ties, loose hanging jewelry and loose clothing before starting work on the vehicle.**<br>• **Bind long hair securely behind the head.**<br>• **When working on the vehicle, apply the parking brake firmly, place the gear shift lever in "Neutral" or "N" and block the wheels.**<br>• **Always turn off the starter switch to stop the engine, unless the operation requires the engine running. Removing the key from the switch is recommended.**<br>• **To avoid serious burns, keep yourself away from hot metal parts such as the engine, exhaust manifold, radiator, muffler, exhaust pipe and tail pipe.**<br>• **Do not smoke while working on the vehicle since fuel, and gas from battery are flammable.**<br>• **Take utmost care when working on the battery. It contains corrosive sulfuric acid.**<br>• **Large electric current flows through the battery cable and starter cable. Be careful not to cause a short which can result in personal injury and/or property damage.**<br>• **Read carefully and observe the instructions specified on the jack before using it.**<br>• **Use safety stands to support the vehicle whenever you need to work under it. It is dangerous to work under a vehicle supported only by a jack.**<br>• **If it is necessary to run the engine after the hood is raised (tilted), make sure that the parking brake is firmly applied, the wheels are blocked, and the gear shift lever is positioned in "Neutral" before staring the engine.**<br>• **Run the engine only in a well-ventilated area to avoid inhalation of carbon monoxide.**<br>• **Keep yourself, your clothing and your tools away from moving parts such as the cooling fan and V-belts when the engine is running.**<br>• **Be careful not to damage lines and hoses by stepping or holding your feet on them.**<br>• **Be careful not to leave any tool in the engine compartment. The tool may be hit by moving parts, which can cause personal injury.** |

### DEFINITION OF SAFETY TERMS

| | |
|---|---|
| ⚠ DANGER | **Indicates an extremely hazardous situation if proper procedures are not followed and could result in death or serious injury.** |
| ⚠ WARNING | **Indicates a potential hazardous situation if proper procedures are not followed and could result in death or serious injury.** |
| ⚠ CAUTION | **Indicates a hazardous situation if proper procedures are not followed and could result in serious injury or damage to parts/equipment.** |
| NOTICE | **Indicates the need to follow proper procedures and to pay attention to precautions so that efficient service is provided.** |
| HINT | **Provides additional information to help you to perform the repair efficiently.** |

## TOWING

- When being towed, always place the gear shift lever in "Neutral" and release the parking brake completely. In order to protect the bumper, fit a protection bar against the lower edge of the bumper and put a wood block under the frame near the No. 1 cross member when attaching the towing chain. Never lift or tow the vehicle if the chain is in direct contact with the bumper.

**1. Towing procedures**

(1) Make sure that the propeller shaft of the vehicle to be towed is removed. When the differential gear or rear axle shaft is defective, remove both right and left rear axle shafts, then cover the hub opening to prevent loss of axle lubricant and entry of dirt or foreign matter.
(2) Use a heavy duty cable or rope when towing the vehicle. Fasten the cable securely to the towing hook on the frame.
(3) The angle of pulling direction of the cable fastened to the towing hook must not exceed 15° in horizontal and vertical directions from the straight ahead, level direction. Avoid using the hook in a way that subjects it to jerk, as in towing a vehicle trapped in a gutter.
(4) Keep the gear shift lever in Neutral.
(5) Make sure that the starter switch is kept in the "ON" position, if the engine is not running.
(6) Make sure that the engine of the towed vehicle is kept running. If the engine is off, no compressed air/ no vacuum will be available for the brake. This is dangerous, as the brake system does not function if the engine is not running.
In addition, the power steering system will not function. The steering wheel, therefore, will become unusually hard to turn, making it impossible to control the vehicle.
(7) Note that the engine brake and exhaust brake cannot be applied, if the propeller shaft is removed.
(8) Make a slow start to minimize shock. Towing speed should be less than 30 km/h {18 mile/h}.

**2. If the engine of the towed vehicle is defective, make sure that the vehicle is towed only by a tow truck designed for that purpose.**

(1) Front end towing (with front wheels raised off the ground)
When towing from the front end with the front wheels raised off the ground, remove the rear axle shafts to protect the transmission and differential gears from being damaged. The hub openings should be covered to prevent the loss of axle lubricant or the entry of dirt or foreign matter. The above-mentioned precautions should be observed for vehicles equipped with either manual or automatic transmission, and for even short distance towing. After being towed, check and refill the rear axle housing with lubricant if necessary.
(2) Rear end towing
When being towed with the rear wheels raised off the ground, fasten and secure the steering wheel in a straight-ahead position.

## CLEAN AIR ACT

**1. Heavy-duty engine rebuilding practices.**
**§ 86.004-40**

- The provisions of this section are applicable to heavy-duty engines subject to model year 2004 or later standards and are applicable to the process of engine rebuilding (or rebuilding a portion of an engine or engine system). The process of engine rebuilding generally includes disassembly, replacement of multiple parts due to wear, and reassembly, and also may include the removal of the engine from the vehicle and other acts associated with rebuilding an engine. Any deviation from the provisions contained in this section is a prohibited act under section 203(a) (3) of the Clean Air Act (42 U.S.C. 7522(a) (3)).

(1) When rebuilding an engine, portions of an engine, or an engine system, there must be a reasonable technical basis for knowing that the resultant engine is equivalent, from an emissions standpoint, to a certified configuration (i.e., tolerances, calibrations, specifications) and the model year(s) of the resulting engine configuration must be identified. A reasonable basis would exist if:
   a. Parts installed, whether the parts are new, used, or rebuilt, are such that a person familiar with the design and function of motor vehicle engines would reasonably believe that the parts perform the same function with respect to emissions control as the original parts; and
   b. Any parameter adjustment or design element change is made only:
      • In accordance with the original engine manufacturer's instructions; or
      • Where data or other reasonable technical basis exists that such parameter adjustment or design element change, when performed on the engine or similar engines, is not expected to adversely affect in-use emissions.
(2) When an engine is being rebuilt and remains installed or is reinstalled in the same vehicle, it must be rebuilt to a configuration of the same or later model year as the original engine. When an engine is being replaced, the replacement engine must be an engine of (or rebuilt to) a configuration of the same or later model year as the original engine.

(3) At time of rebuild, emissions-related codes or signals from on-board monitoring systems may not be erased or reset without diagnosing and responding appropriately to the diagnostic codes, regardless of whether the systems are installed to satisfy requirements in § 86.004-25 or for other reasons and regardless of form or interface. Diagnostic systems must be free of all such codes when the rebuilt engine is returned to service. Such signals may not be rendered inoperative during the rebuilding process.

(4) When conducting a rebuild without removing the engine from the vehicle, or during the installation of a rebuilt engine, all critical emissions-related components listed in § 86.004-25(2) not otherwise addressed by paragraphs (1) through (3) of this section must be checked and cleaned, adjusted, repaired, or replaced as necessary, following manufacturer recommended practices.

(5) Records shall be kept by parties conducting activities included in paragraphs (1) through (4) of this section. The records shall include at minimum the mileage and/or hours at time of rebuild, a listing of work performed on the engine and emissions-related control components including a listing of parts and components used, engine parameter adjustments, emissions-related codes or signals responded to and reset, and work performed under paragraph (4) of this section.

a. Parties may keep records in whatever format or system they choose as long as the records are understandable to an EPA enforcement officer or can be otherwise provided to an EPA enforcement officer in an understandable format when requested.

b. Parties are not required to keep records of information that is not reasonably available through normal business practices including information on activities not conducted by themselves or information that they cannot reasonably access.

c. Parties may keep records of their rebuilding practices for an engine family rather than on each individual engine rebuilt in cases where those rebuild practices are followed routinely.

d. Records must be kept for a minimum of two years after the engine is rebuilt.

**2. Maintenance instructions.**
**§ 86.010-38**

(1) For each new diesel-fueled engine subject to the standards prescribed in § 86.007-11, as applicable, the manufacturer shall furnish or cause to be furnished to the ultimate purchaser a statement that
**"This engine must be operated only with ultra low-sulfur diesel fuel (meeting EPA specifications for highway diesel fuel, including a 15 ppm sulfur cap)."**

# IDENTIFICATION INFORMATION

EN00Z08020200001

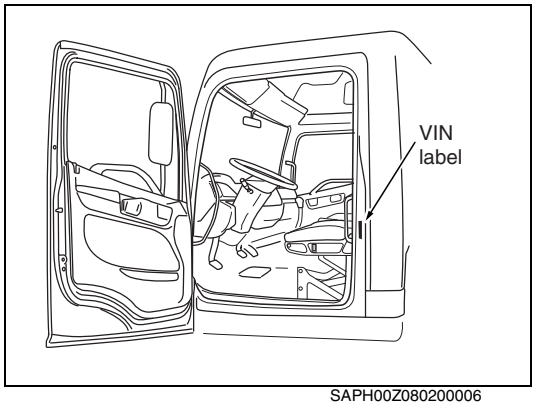


SAPH00Z080200006

**1. VEHICLE IDENTIFICATION NUMBER**

- VEHICLE IDENTIFICATION NUMBER (VIN) is comprised of 17 digits and letters. The VIN label is affixed to the left pillar of the cab.
  These numbers are used for identification purposes when you have a vehicle registered or inspected. Please quote these numbers when ordering spare parts or reporting technical matter to receive prompt service attention.
- The following is an explanation of the items that are listed on the VIN label.

(1) VIN
See VEHICLE IDENTIFICATION NUMBER (VIN) STRUCTURE on the following page.
(2) P.S. (PRODUCTION SERIES) AND VEHICLE COMPONENTS

| MODEL (CLASS) | PRODUCTION CODE | | CLUTCH SIZE | TRANSMISSION SERIES | TRANSMISSION RATIO | | | | | | | REAR AXLE SERIES | SERVICE BRAKE | PARKING BRAKE | SUSPENSION |
|---|---|---|---|---|---|---|---|---|---|---|---|---|---|---|---|
| | MODEL | SERIES | | | 1st | 2nd | 3rd | 4th | 5th | 6th | Rev. | | | | |
| HINO238 (6) | NE8J | EBF | - | 2200HS | 3.10 | 1.81 | 1.41 | 1.00 | 0.71 | 0.61 | 4.49 | RS17-145 | H | D | L or A |
| | | | | | | | | | | | | RS19-145 | | | |
| | | | | 2200RDS | 3.10 | 1.81 | 1.41 | 1.00 | 0.71 | 0.61 | 4.49 | RS17-145 | | | |
| | | | | | | | | | | | | RS19-145 | | | |
| | | | | 2500HS | 3.51 | 1.90 | 1.44 | 1.00 | 0.74 | 0.64 | 5.09 | RS17-145 | | | |
| | | | | | | | | | | | | RS19-145 | | | |
| | | | | 2500RDS | 3.51 | 1.90 | 1.44 | 1.00 | 0.74 | 0.64 | 5.09 | RS17-145 | | | |
| | | | | | | | | | | | | RS19-145 | | | |
| | | HBF | - | 2200HS | 3.10 | 1.81 | 1.41 | 1.00 | 0.71 | 0.61 | 4.49 | RS17-145 | | | |
| | | | | | | | | | | | | RS19-145 | | | |
| | | | | 2200RDS | 3.10 | 1.81 | 1.41 | 1.00 | 0.71 | 0.61 | 4.49 | RS17-145 | | | |
| | | | | | | | | | | | | RS19-145 | | | |
| | | | | 2500HS | 3.51 | 1.90 | 1.44 | 1.00 | 0.74 | 0.64 | 5.09 | RS17-145 | | | |
| | | | | | | | | | | | | RS19-145 | | | |
| | | | | 2500RDS | 3.51 | 1.90 | 1.44 | 1.00 | 0.74 | 0.64 | 5.09 | RS17-145 | | | |
| | | | | | | | | | | | | RS19-145 | | | |
| HINO258 LP*(6) | NE8J | EBF | - | 2200HS | 3.10 | 1.81 | 1.41 | 1.00 | 0.71 | 0.61 | 4.49 | RS17-145 | H | D | L |
| | | | | | | | | | | | | RS19-145 | | | |
| | | | | 2200RDS | 3.10 | 1.81 | 1.41 | 1.00 | 0.71 | 0.61 | 4.49 | RS17-145 | H | D | L or A |
| | | | | | | | | | | | | RS19-145 | | | |
| | | | | 2500HS | 3.51 | 1.90 | 1.44 | 1.00 | 0.74 | 0.64 | 5.09 | RS17-145 | | | |
| | | | | | | | | | | | | RS19-145 | | | |
| | | | | 2500RDS | 3.51 | 1.90 | 1.44 | 1.00 | 0.74 | 0.64 | 5.09 | RS17-145 | | | |
| | | | | | | | | | | | | RS19-145 | | | |
| | | GBF | 350mm | FS5406 | 9.01 | 5.27 | 3.22 | 2.04 | 1.36 | 1.00 | 8.63 | RS17-145 | | | |
| | | | | | | | | | | | | RS19-145 | | | |
| | | HBF | - | 2200HS | 3.10 | 1.81 | 1.41 | 1.00 | 0.71 | 0.61 | 4.49 | RS17-145 | | | |
| | | | | | | | | | | | | RS19-145 | | | |
| | | | | 2200RDS | 3.10 | 1.81 | 1.41 | 1.00 | 0.71 | 0.61 | 4.49 | RS17-145 | | | |
| | | | | | | | | | | | | RS19-145 | | | |
| | | | | 2500HS | 3.51 | 1.90 | 1.44 | 1.00 | 0.74 | 0.64 | 5.09 | RS17-145 | | | |
| | | | | | | | | | | | | RS19-145 | | | |
| | | | | 2500RDS | 3.51 | 1.90 | 1.44 | 1.00 | 0.74 | 0.64 | 5.09 | RS17-145 | | | |
| | | | | | | | | | | | | RS19-145 | | | |

| MODEL (CLASS) | PRODUCTION CODE | | CLUTCH SIZE | TRANSMISSION SERIES | TRANSMISSION RATIO | | | | | | | REAR AXLE SERIES | SERVICE BRAKE | PARKING BRAKE | SUSPENSION |
|---|---|---|---|---|---|---|---|---|---|---|---|---|---|---|---|
| | MODEL | SERIES | | | 1st | 2nd | 3rd | 4th | 5th | 6th | Rev. | | | | |
| HINO258 LP*(6) | NJ8J | JBF | 350mm | FS5406 | 9.01 | 5.27 | 3.22 | 2.04 | 1.36 | 1.00 | 8.63 | RS17-145 | F | W | A |
| | | | | | | | | | | | | RS19-145 | | | |
| | | KBF | - | 2200HS | 3.10 | 1.81 | 1.41 | 1.00 | 0.71 | 0.61 | 4.49 | RS17-145 | F | W | L or A |
| | | | | | | | | | | | | RS19-145 | | | |
| | | | | 2200RDS | 3.10 | 1.81 | 1.41 | 1.00 | 0.71 | 0.61 | 4.49 | RS17-145 | | | |
| | | | | | | | | | | | | RS19-145 | | | |
| | | | | 2500HS | 3.51 | 1.90 | 1.44 | 1.00 | 0.74 | 0.64 | 5.09 | RS17-145 | | | |
| | | | | | | | | | | | | RS19-145 | | | |
| | | | | 2500RDS | 3.51 | 1.90 | 1.44 | 1.00 | 0.74 | 0.64 | 5.09 | RS17-145 | | | |
| | | | | | | | | | | | | RS19-145 | | | |
| | | PBF | - | 2200HS | 3.10 | 1.81 | 1.41 | 1.00 | 0.71 | 0.61 | 4.49 | RS17-145 | | | |
| | | | | | | | | | | | | RS19-145 | | | |
| | | | | 2200RDS | 3.10 | 1.81 | 1.41 | 1.00 | 0.71 | 0.61 | 4.49 | RS17-145 | | | |
| | | | | | | | | | | | | RS19-145 | | | |
| | | | | 2500HS | 3.51 | 1.90 | 1.44 | 1.00 | 0.74 | 0.64 | 5.09 | RS17-145 | | | |
| | | | | | | | | | | | | RS19-145 | | | |
| | | | | 2500RDS | 3.51 | 1.90 | 1.44 | 1.00 | 0.74 | 0.64 | 5.09 | RS17-145 | | | |
| | | | | | | | | | | | | RS19-145 | | | |
| HINO268 (6) | NE8J | EBF | - | 2200HS | 3.10 | 1.81 | 1.41 | 1.00 | 0.71 | 0.61 | 4.49 | RS17-145 | H | D | L |
| | | | | | | | | | | | | RS19-145 | | | |
| | | | | 2200RDS | 3.10 | 1.81 | 1.41 | 1.00 | 0.71 | 0.61 | 4.49 | RS17-145 | H | D | L or A |
| | | | | | | | | | | | | RS19-145 | | | |
| | | | | 2500HS | 3.51 | 1.90 | 1.44 | 1.00 | 0.74 | 0.64 | 5.09 | RS17-145 | | | |
| | | | | | | | | | | | | RS19-145 | | | |
| | | | | 2500RDS | 3.51 | 1.90 | 1.44 | 1.00 | 0.74 | 0.64 | 5.09 | RS17-145 | | | |
| | | | | | | | | | | | | RS19-145 | | | |
| | | GBF | 350mm | FS5406 | 9.01 | 5.27 | 3.22 | 2.04 | 1.36 | 1.00 | 8.63 | RS17-145 | | | |
| | | | | | | | | | | | | RS19-145 | | | |
| | | HBF | - | 2200HS | 3.10 | 1.81 | 1.41 | 1.00 | 0.71 | 0.61 | 4.49 | RS17-145 | | | |
| | | | | | | | | | | | | RS19-145 | | | |
| | | | | 2200RDS | 3.10 | 1.81 | 1.41 | 1.00 | 0.71 | 0.61 | 4.49 | RS17-145 | | | |
| | | | | | | | | | | | | RS19-145 | | | |
| | | | | 2500HS | 3.51 | 1.90 | 1.44 | 1.00 | 0.74 | 0.64 | 5.09 | RS17-145 | | | |
| | | | | | | | | | | | | RS19-145 | | | |
| | | | | 2500RDS | 3.51 | 1.90 | 1.44 | 1.00 | 0.74 | 0.64 | 5.09 | RS17-145 | | | |
| | | | | | | | | | | | | RS19-145 | | | |

| MODEL (CLASS) | PRODUCTION CODE | | CLUTCH SIZE | TRANSMISSION SERIES | TRANSMISSION RATIO | | | | | | | REAR AXLE SERIES | SERVICE BRAKE | PARKING BRAKE | SUSPENSION |
|---|---|---|---|---|---|---|---|---|---|---|---|---|---|---|---|
| | MODEL | SERIES | | | 1st | 2nd | 3rd | 4th | 5th | 6th | Rev. | | | | |
| HINO268 (6) | NJ8J | JBF | 350mm | FS5406 | 9.01 | 5.27 | 3.22 | 2.04 | 1.36 | 1.00 | 8.63 | RS17-145 | F | W | L or A |
| | | | | | | | | | | | | RS19-145 | | | |
| | | KBF | - | 2200HS | 3.10 | 1.81 | 1.41 | 1.00 | 0.71 | 0.61 | 4.49 | RS17-145 | | | |
| | | | | | | | | | | | | RS19-145 | | | |
| | | | | 2200RDS | 3.10 | 1.81 | 1.41 | 1.00 | 0.71 | 0.61 | 4.49 | RS17-145 | | | |
| | | | | | | | | | | | | RS19-145 | | | |
| | | | | 2500HS | 3.51 | 1.90 | 1.44 | 1.00 | 0.74 | 0.64 | 5.09 | RS17-145 | | | |
| | | | | | | | | | | | | RS19-145 | | | |
| | | | | 2500RDS | 3.51 | 1.90 | 1.44 | 1.00 | 0.74 | 0.64 | 5.09 | RS17-145 | | | |
| | | | | | | | | | | | | RS19-145 | | | |
| | | PBF | - | 2200HS | 3.10 | 1.81 | 1.41 | 1.00 | 0.71 | 0.61 | 4.49 | RS17-145 | | | |
| | | | | | | | | | | | | RS19-145 | | | |
| | | | | 2200RDS | 3.10 | 1.81 | 1.41 | 1.00 | 0.71 | 0.61 | 4.49 | RS17-145 | | | |
| | | | | | | | | | | | | RS19-145 | | | |
| | | | | 2500HS | 3.51 | 1.90 | 1.44 | 1.00 | 0.74 | 0.64 | 5.09 | RS17-145 | | | |
| | | | | | | | | | | | | RS19-145 | | | |
| | | | | 2500RDS | 3.51 | 1.90 | 1.44 | 1.00 | 0.74 | 0.64 | 5.09 | RS17-145 | | | |
| | | | | | | | | | | | | RS19-145 | | | |
| | NV8J | NBF | 350mm | FS6406 | 9.01 | 5.27 | 3.22 | 2.04 | 1.36 | 1.00 | 8.63 | RS21-145 | F | W | L or A |
| | | | | | | | | | | | | RS23-160 | | | |
| | | PBF | - | 2500HS | 3.51 | 1.90 | 1.44 | 1.00 | 0.74 | 0.64 | 5.09 | RS21-145 | | | |
| | | | | | | | | | | | | RS23-160 | | | |
| | | | | 2500RDS | 3.51 | 1.90 | 1.44 | 1.00 | 0.74 | 0.64 | 5.09 | RS21-145 | | | |
| | | | | | | | | | | | | RS23-160 | | | |
| | | | | 3000RDS | 3.49 | 1.86 | 1.41 | 1.00 | 0.75 | 0.65 | 5.03 | RS21-145 | | | |
| | | | | | | | | | | | | RS23-160 | | | |
| | | | | 3500RDS | 4.59 | 2.25 | 1.54 | 1.00 | 0.75 | 0.65 | 5.00 | RS21-145 | | | |
| | | | | | | | | | | | | RS23-160 | | | |
| | | SBF | - | 2500HS | 3.51 | 1.90 | 1.44 | 1.00 | 0.74 | 0.64 | 5.09 | RS21-145 | | | |
| | | | | | | | | | | | | RS23-160 | | | |
| | | | | 2500RDS | 3.51 | 1.90 | 1.44 | 1.00 | 0.74 | 0.64 | 5.09 | RS21-145 | | | |
| | | | | | | | | | | | | RS23-160 | | | |
| | | | | 3000RDS | 3.49 | 1.86 | 1.41 | 1.00 | 0.75 | 0.65 | 5.03 | RS21-145 | | | |
| | | | | | | | | | | | | RS23-160 | | | |
| | | | | 3500RDS | 4.59 | 2.25 | 1.54 | 1.00 | 0.75 | 0.65 | 5.00 | RS21-145 | | | |
| | | | | | | | | | | | | RS23-160 | | | |

| MODEL (CLASS) | PRODUCTION CODE | | CLUTCH SIZE | TRANSMISSION SERIES | TRANSMISSION RATIO | | | | | | | REAR AXLE SERIES | SERVICE BRAKE | PARKING BRAKE | SUSPENSION |
|---|---|---|---|---|---|---|---|---|---|---|---|---|---|---|---|
| | MODEL | SERIES | | | 1st | 2nd | 3rd | 4th | 5th | 6th | Rev. | | | | |
| HINO268 (6) | NV8J | TBF | 350mm | FS6406 | 9.01 | 5.27 | 3.22 | 2.04 | 1.36 | 1.00 | 8.63 | RS21-145 | F | W | L or A |
| | | | | | | | | | | | | RS23-160 | | | |
| HINO338 (7) | NF8J | DBF | 350mm | FS6406 | 9.01 | 5.27 | 3.22 | 2.04 | 1.36 | 1.00 | 8.63 | RS21-145 | H | D | L or A |
| | | EBF | - | 2500HS | 3.51 | 1.90 | 1.44 | 1.00 | 0.74 | 0.64 | 5.09 | RS21-145 | | | |
| | | | | 2500RDS | 3.51 | 1.90 | 1.44 | 1.00 | 0.74 | 0.64 | 5.09 | RS21-145 | | | |
| | NV8J | NBF | 350mm | FS6406 | 9.01 | 5.27 | 3.22 | 2.04 | 1.36 | 1.00 | 8.63 | RS21-145 | F | W | L or A |
| | | | | | | | | | | | | RS23-160 | | | |
| | | PBF | - | 2500HS | 3.51 | 1.90 | 1.44 | 1.00 | 0.74 | 0.64 | 5.09 | RS21-145 | | | |
| | | | | | | | | | | | | RS23-160 | | | |
| | | | | 2500RDS | 3.51 | 1.90 | 1.44 | 1.00 | 0.74 | 0.64 | 5.09 | RS21-145 | | | |
| | | | | | | | | | | | | RS23-160 | | | |
| | | | | 3000RDS | 3.49 | 1.86 | 1.41 | 1.00 | 0.75 | 0.65 | 5.03 | RS21-145 | | | |
| | | | | | | | | | | | | RS23-160 | | | |
| | | | | 3500RDS | 4.59 | 2.25 | 1.54 | 1.00 | 0.75 | 0.65 | 5.00 | RS21-145 | | | |
| | | | | | | | | | | | | RS23-160 | | | |
| | | SBF | - | 2500HS | 3.51 | 1.90 | 1.44 | 1.00 | 0.74 | 0.64 | 5.09 | RS21-145 | | | |
| | | | | | | | | | | | | RS23-160 | | | |
| | | | | 2500RDS | 3.51 | 1.90 | 1.44 | 1.00 | 0.74 | 0.64 | 5.09 | RS21-145 | | | |
| | | | | | | | | | | | | RS23-160 | | | |
| | | | | 3000RDS | 3.49 | 1.86 | 1.41 | 1.00 | 0.75 | 0.65 | 5.03 | RS21-145 | | | |
| | | | | | | | | | | | | RS23-160 | | | |
| | | | | 3500RDS | 4.59 | 2.25 | 1.54 | 1.00 | 0.75 | 0.65 | 5.00 | RS21-145 | | | |
| | | | | | | | | | | | | RS23-160 | | | |
| | | TBF | 350mm | FS6406 | 9.01 | 5.27 | 3.22 | 2.04 | 1.36 | 1.00 | 8.63 | RS21-145 | | | |
| | | | | | | | | | | | | RS23-160 | | | |
| HINO358 (8) | NH8J | SBF | - | 3000RDS | 3.49 | 1.86 | 1.41 | 1.00 | 0.75 | 0.65 | 5.03 | RS23-160 | F | W | L or A |
| | | | | 3500RDS | 4.59 | 2.25 | 1.54 | 1.00 | 0.75 | 0.65 | 5.00 | | | | |
| | | TBF | 350mm | FS6406 | 9.01 | 5.27 | 3.22 | 2.04 | 1.36 | 1.00 | 8.63 | RS23-160 | | | |

| CODE | SERVICE BRAKE | PARKING BRAKE CONTROL CODE | SUSPENSION |
|---|---|---|---|
| | H: Hydraulic | D: ACTING ON DIFFERENTIAL | L: LEAF |
| | F: Full air | W: ACTING ON REAR WHEEL | A: AIR |

LP*: Low profile

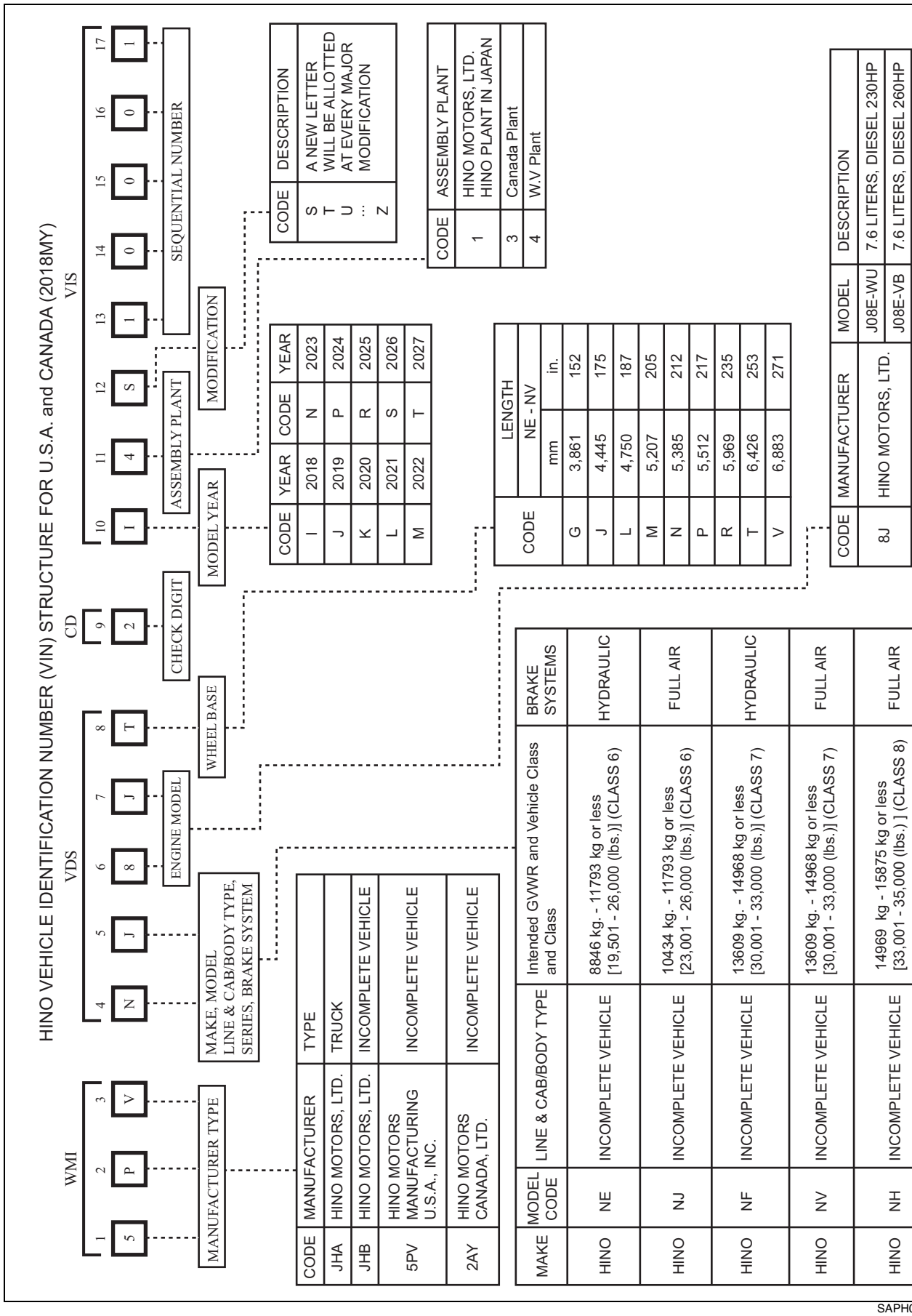


SAPH00Z080200007

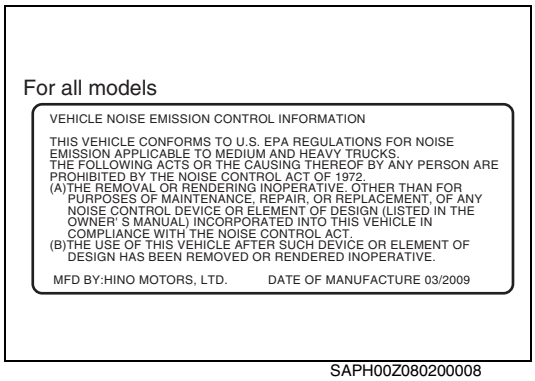

SAPH00Z080200008

## 2. VEHICLE NOISE EMISSION CONTROL INFORMATION

- The Vehicle Noise Emission Control Information is affixed to the side of the left door. The name of manufacturer, production year and month, and noise emission applicable to medium and heavy trucks in conformity with U.S. EPA Regulations are displayed.

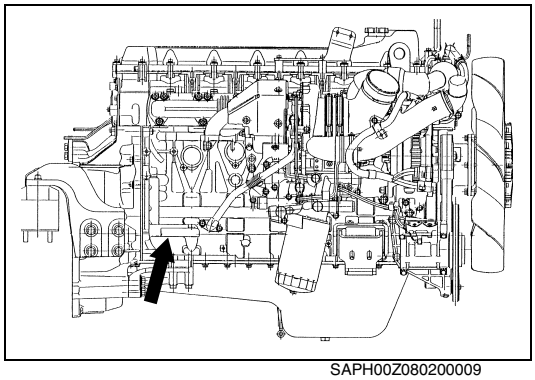
SAPH00Z080200009

## 3. ENGINE SERIAL NUMBERS.

- Please quote these numbers when ordering spare parts or reporting technical matter to receive prompt service attention.
  The engine serial number is engraved on the engine cylinder block.

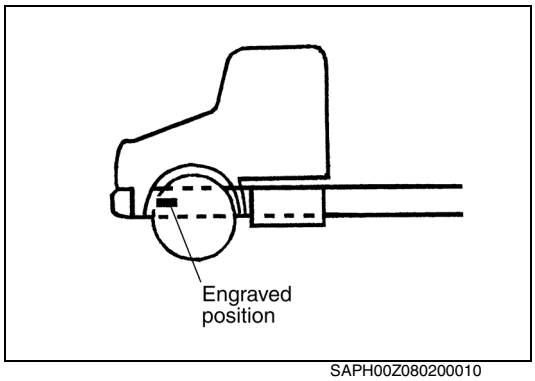

SAPH00Z080200010

## 4. CHASSIS SERIAL NUMBER

- Chassis serial number is engraved on the left side frame near the front wheel.

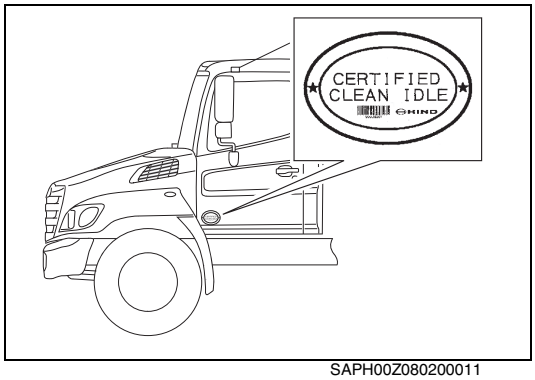

SAPH00Z080200011

## 5. CLEAN IDLE CERTIFIED LABEL FOR U.S.

- Make sure that the following clean engine idling certified label is affixed to the outside of the left door.
  By the CARB below, the label must be affixed there to prove that the new vehicle with diesel engine manufactured from Jan., 2008 conforms to this low.

**CARB § 1956.8. Exhaust Emission Standard and Test Procedure (a) (b) Heavy-Duty Diesel Engine Idling Requirements**

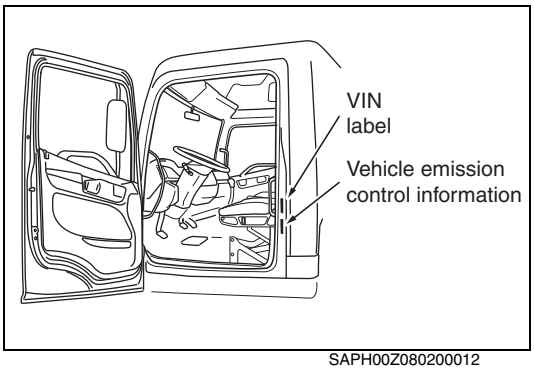


SAPH00Z080200012

For example

VEHICLE EMISSION CONTROL INFORMATION
Hino Motors, Ltd.
VEHICLE FAMILY NAME : FHMX2V0CVBNN
REGULATORY SUB-CATEGORY: VOCATIONAL VEHICLES:19,500<GVWR≦33,000 LBS.
EMISSION CONTROL SYSTEM : LRRA
THIS VEHICLE COMPLIES WITH U.S. EPA REGULATIONS
FOR 2015 MY HEAVY-DUTY VEHICLES.

SAPH00Z080200013

**6. VEHICLE EMISSION CONTROL INFORMATION**

- The Vehicle Emission Control Information is affixed to the side of the left door. The name of manufacturer, production year and month, and emission applicable to medium and heavy trucks in conformity with U.S. EPA Regulations are displayed.

# HOW TO USE THIS WORKSHOP MANUAL

EN00Z08020200002

This workshop manual is designed as a guide for servicing the vehicle.
An INDEX is provided on the first page of each chapter.

TROUBLESHOOTING is dealt with in each chapter.
When beginning operations, refer to the TROUBLESHOOTING section for a guide to appropriate diagnosis.

SPECIAL TOOL is dealt with in each chapter.
When ordering a special tool, confirm the part number with the applicable parts catalog.

- **RERAIR PROCEDURES**
  Repair procedures when self-explanatory, such as simple installation and removal of parts, have been omitted. Illustrations, such as the one below, have been provided to make such simple procedures clear. Only essential procedures requiring specific directions have been dealt with explicitly.

## MAIN CYLINDER

EXAMPLE:

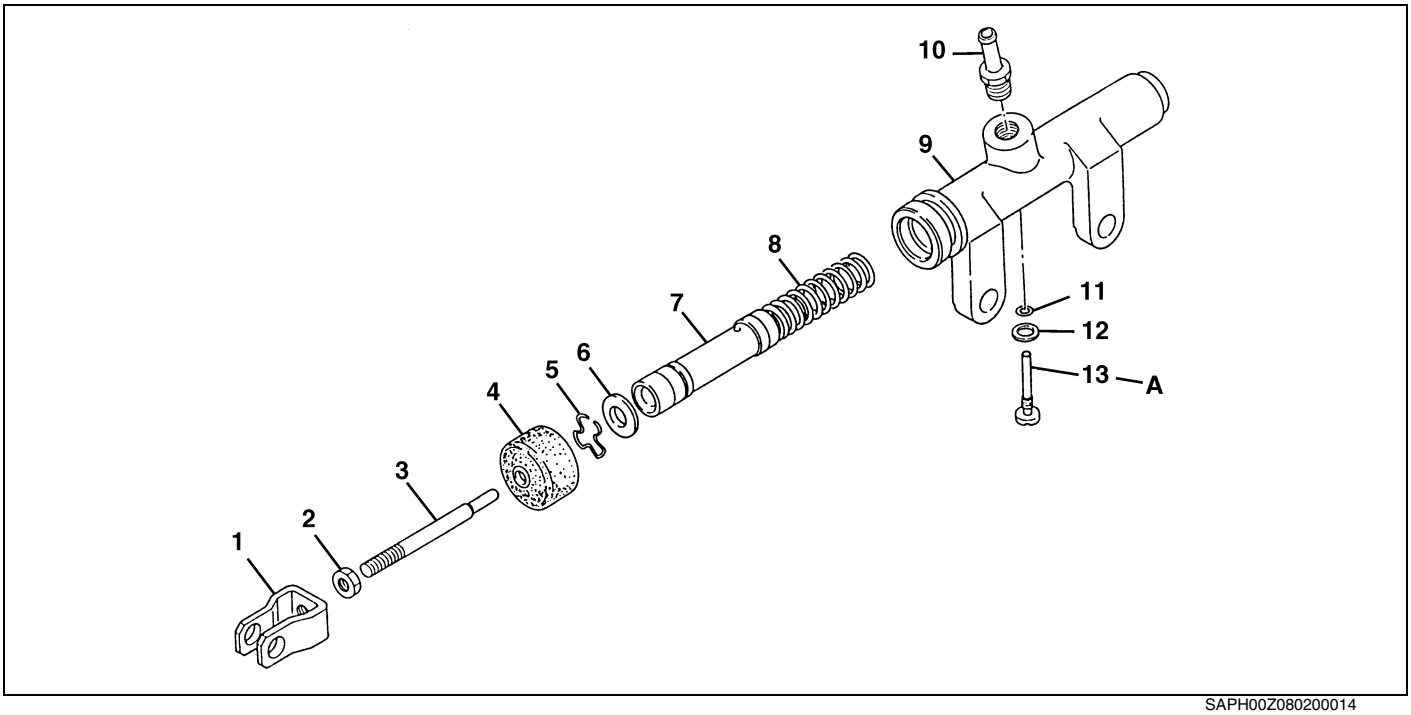


SAPH00Z080200014

| | | | |
|---|---|---|---|
| 1 | Clevis | 8 | Return spring |
| 2 | Lock nut | 9 | Body |
| 3 | Push rod | 10 | Hose joint |
| 4 | Boot | 11 | O-ring |
| 5 | Retainer ring | 12 | Soft washer |
| 6 | Thrust washer | 13 | Bolt |
| 7 | Piston | | |

**Tightening torque** **Unit: N·m {kgf·cm, lbf·ft}**

| | | | |
|---|---|---|---|
| A | 2.5-4.4 {25-45, 1.8-3.2} | | |

In some cases, illustrations may be of parts which differ in some nonessential way from the parts found on your particular vehicle. In such cases, the principle or procedure being illustrated applies regardless of such nonessential differences.

- **DEFINITION OF TERMS**
  Definition of vehicle right and left.
  Right and left refers to the left and right sides of the vehicle as seen while looking down the center line from the rear towards the front.

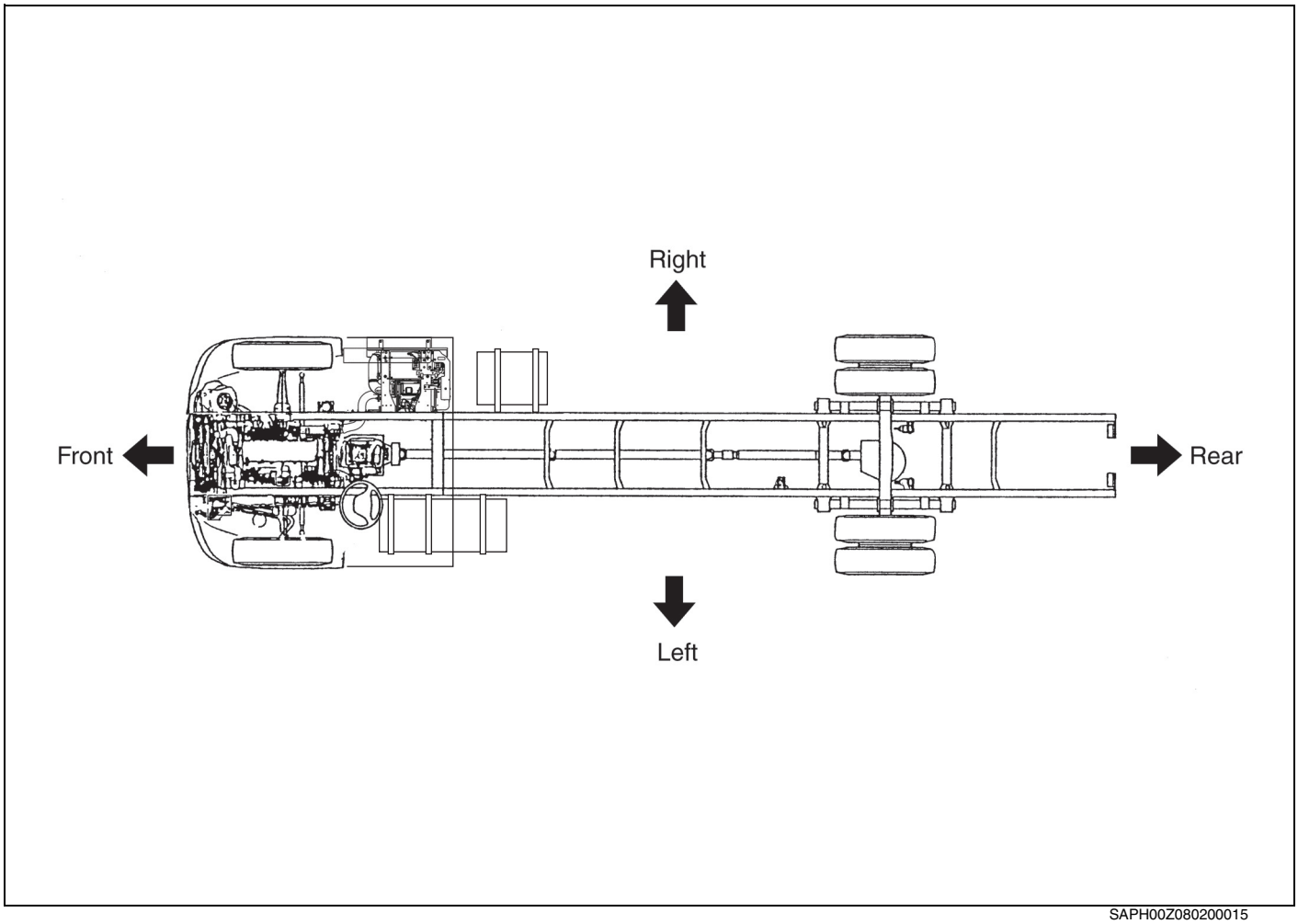


SAPH00Z080200015

# PRECAUTIONS

EN00Z0802C100001

## PRECAUTIONS FOR ELECTRICAL SYSTEM

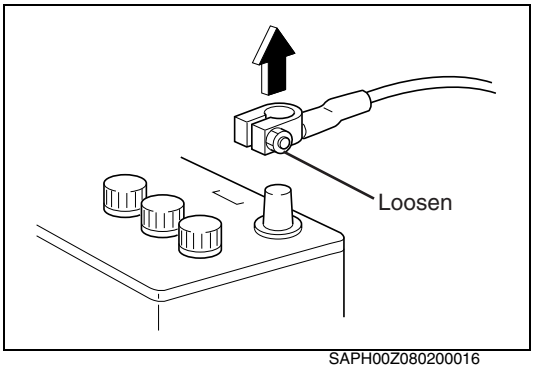

SAPH00Z080200016

### 1. REMOVING THE BATTERY CABLE

**⚠ WARNING**

- **Be sure to wait for at least ten minutes after the starter key is turned to "LOCK" position before you disconnect the battery terminals from the battery, as the vehicle data is recorded on ECU and DCU starts working for the exhaust gas after treatment after the starter key is turned to "LOCK" position. Otherwise, the vehicle data will not be recorded on ECU properly and DCU will not complete working properly, which may result in the malfunction of DPR system and DEF-SCR system.**
- **The MIL (malfunction indicator light) may come on when the starter key is turned to "ON" position again, even if you wait for at least ten minutes before disconnecting the battery terminals from the battery after the starter key is turned to "LOCK" position. In this case, use HINO DX II to clear the DTC (P204F and P068A), to turn off the MIL and to conduct DPR regeneration manually.**

(1) Before electrical system work, remove the cable from the minus terminal of the battery in order to avoid burning caused by short-circuiting.
(2) To remove the battery cable, fully release the nut to avoid damage to the battery terminal. Never twist the terminal.

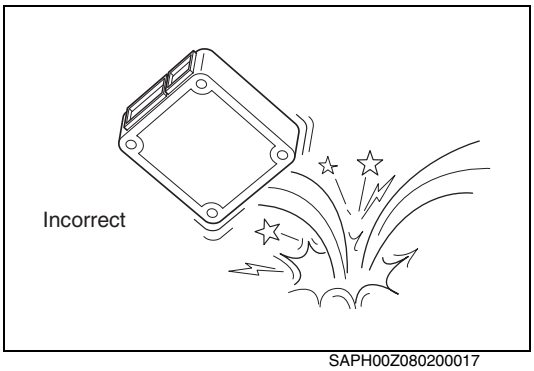

SAPH00Z080200017

### 2. HANDLING OF ELECTRONIC PARTS

(1) Never give an impact to electronic parts of a computer or relay.
(2) Keep electronic parts away from high temperatures and humidity.
(3) Never splash water onto electronic parts in washing the vehicle.
(4) Do not remove the harness connector, electric component box, and cover except for repair and inspection.
If removal is necessary, pay attention that water and foreign matters do not attach or enter to the connector, terminals, electric component box, and cover.
In restoration, make sure there is no attachment or entry of water and foreign matters and mount them properly, because it causes degradation of waterproof function.

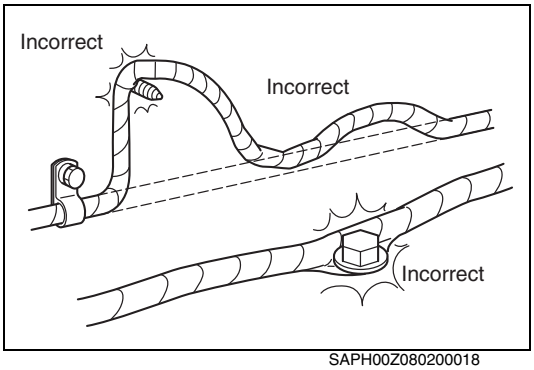

SAPH00Z080200018

### 3. HANDLING OF WIRE HARNESS

(1) Perform marking on a clamp and a clip and secure then in original position so that the wire harness will not interfere with the end and acute angle section of the body and a bolt.
(2) To attach a part, take care not to bite the wire harness.

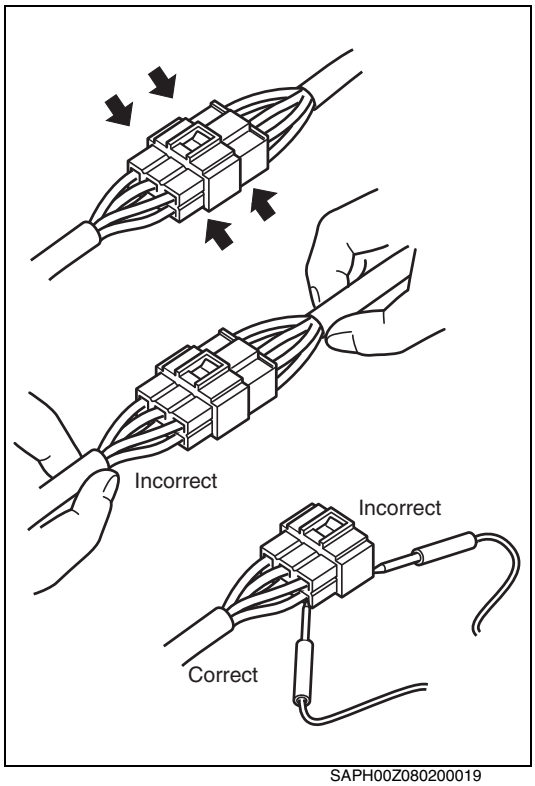

SAPH00Z080200019

**4. HANDLING OF CONNECTOR**

(1) To remove a connector with lock, release the lock then pull it out.
(2) To remove a connector, hold the connector (indicated by an arrow in the figure) to pull it out. Never pull the harness.
(3) To connect a connector with lock, insert it until it clicks.
(4) To insert a test lead into the connector, insert it from behind the connector.
(5) In case it is difficult to insert a test lead from behind the connector, prepare a harness for inspection and perform inspection.

**5. INSTALLATION OF BATTERY DISCONNECT SWITCH**

**⚠ WARNING**

- **Installation of the battery disconnect switch on the power supply circuit for the dosing control unit of DEF-SCR (DCU) may damage or result in the malfunction of DEF-SCR system.**
- **Be sure to read and follow the procedures and instructions on the service bulletin before the installation of the battery disconnect switch.**

**6. HANDLING OF BATTERY DISCONNECT SWITCH**

**⚠ WARNING**

- **Wait for at least one minute before using the battery disconnect switch after the starter key is turned to "LOCK" position. Otherwise, the vehicle data will not be recorded on ECU properly, which may result in the malfunction of DPR system.**

## PRECAUTIONS FOR ELECTRIC WELDING

**1. PRECAUTION FOR ELECTRIC WELDING**

**Electrical components such as the alternator and tachograph are directly connected to the battery and one end is earthed to the chassis frame. Under these conditions, welding current will flow back along the earth circuit if electric welding is carried out and damage may be caused to the alternator, tachograph, electrical components, etc. Consequently, the following precautions are always to be taken during welding.**

(1) Disconnect the earth terminal of the battery at the frame fitment and earth the welding equipment securely to the frame itself. (Do not fit the welding equipment earth to such things as the tire rims, brake pipes or fuel pipes and leaf spring, etc.)
   a. Turn the starter switch off.
   b. Disconnect the negative terminal of the battery.
   c. Earth welding equipment securely, near to the area to be welded.
   d. Put back battery negative ground as original condition.
   e. Finally check the functioning of all instruments.

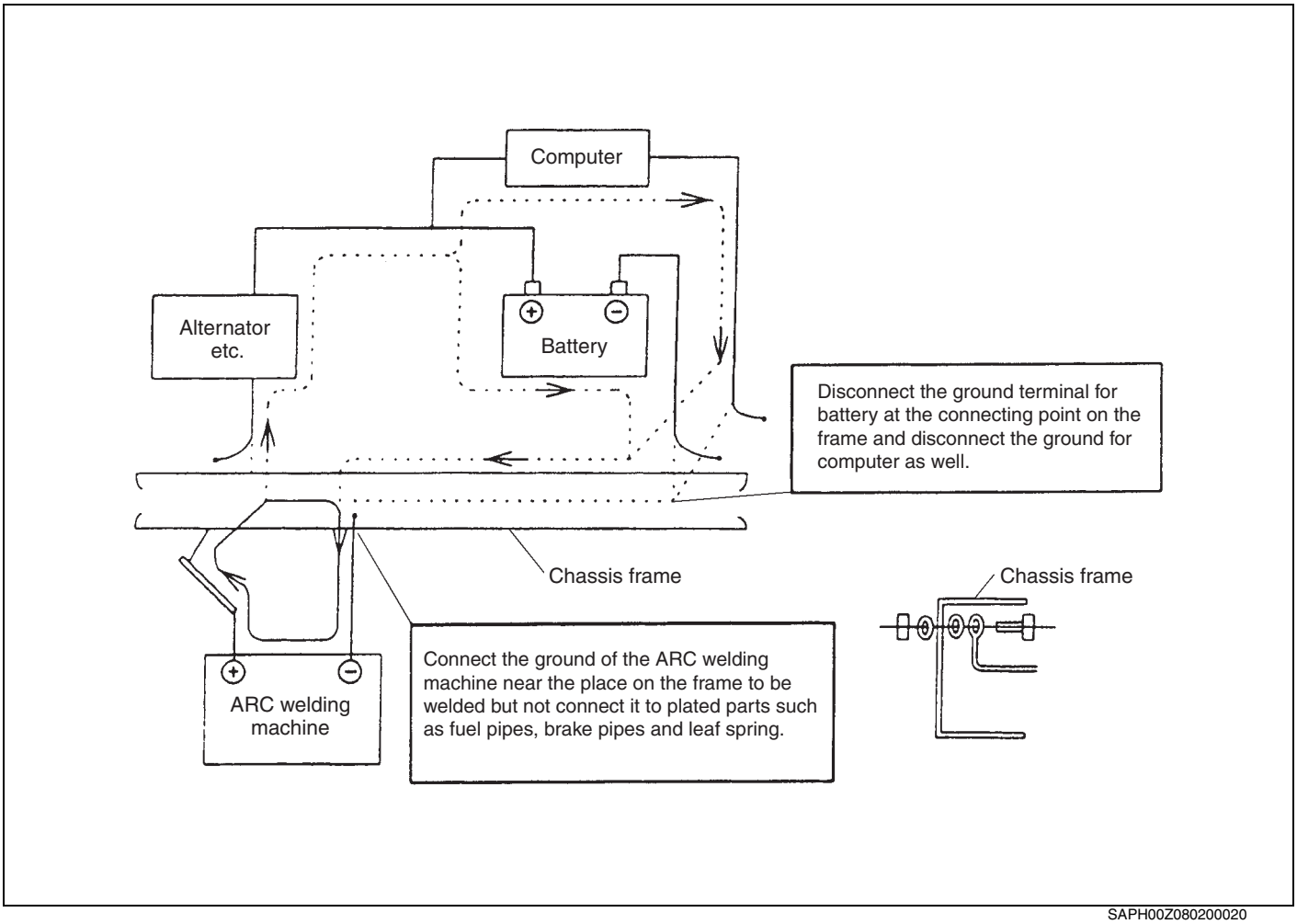


SAPH00Z080200020

(2) In order to prevent damage to ancillary equipment components from sparks during welding, take steps such as putting fire-resistant covers over things like the engine, meters, steering wheel, hoses, tubes, leaf spring and tires.

# SEALANT ON THE TAPERED SCREW FOR PIPING

EN00Z08020200003

To the tapered thread of the air pipe joint is applied the sealant "LOC-TITE #575". Follow the procedure below to remove/attach the piping.

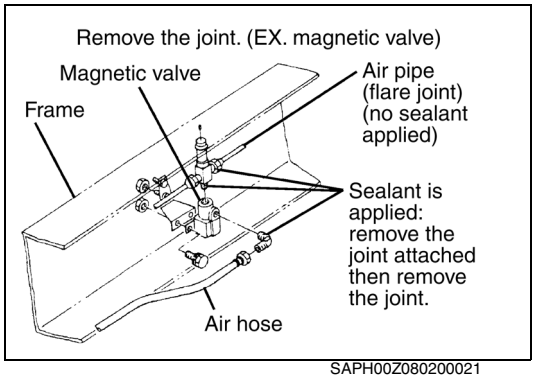

SAPH00Z080200021

**1. REMOVAL**

(1) The sealant (LOCTITE #575) has a high sealing capability. The return torque of taper joint is about 1.5 times as high as the initial tightening torque. To remove the joint, use a longer wrench.

(2) For replacement of joint in a place with poor workability, remove the auxiliaries with the joint attached then remove the joint.

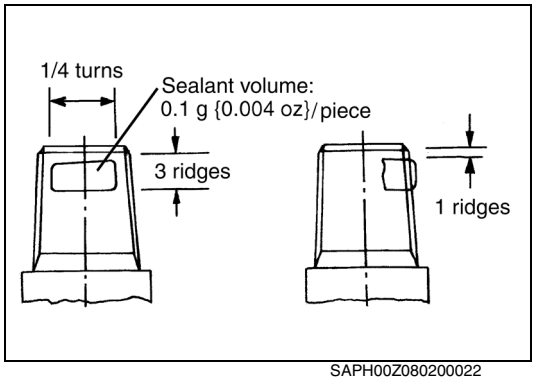

SAPH00Z080200022

**2. ATTACHING**

(1) To apply sealant (LOCTITE #575), use waste and thinner to wipe the dirt off the sealing section, directly apply the sealant by a quarter turn (three ridges) starting from the second ridge from the tip, then assemble in accordance with the tightening torque table below.
Wipe dirt off the mating part (female screw) before tightening it.

**⚠ WARNING**

**In case the sealant has entered your eye or attached to your skin, wash it away in running water.**

**Tightening torque of tapered joint** Unit: N·m {kgf·cm, lbf·ft}

| Screw diameter / Material | 1/8 | 1/4 | 3/8 | 1/2 |
|---|---|---|---|---|
| Steel | 20±5 {200±50, 14.4±3.6} | 49±10 {500±100, 36.2±7.2} | 64±15 {650±150, 47±10} | |
| Aluminum, brass | | 25±5 {250±50, 18.1±3.6} | 34±5 {350±50, 25.3±3.6} | 44±5 {450±50, 32.5±3.6} |

(2) To replace vulcanized tape with sealant, remove the tape beforehand, same as (1).

**NOTICE**

**Take special care not to let dirt and foreign matters enter the piping.**

(3) In the event of air leakage after sealant is applied and piping attached, retightening cannot check the air leakage. Follow the steps (1) and (2) to reassemble the piping.

# NYLON TUBE REPLACEMENT METHOD

EN00Z08020200004

## NYLON TUBE REPLACEMENT METHOD

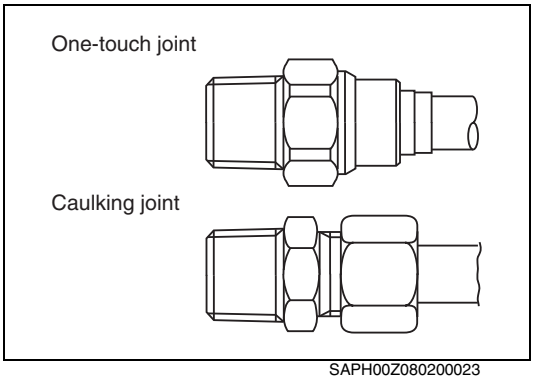


SAPH00Z080200023

- In this vehicle, nylon tubes are used for all the air tubes except those on the charge line and the rear axle, the tubing for the wheel power signal, a portion of the accessory system tubing, and for the unloader tubing, and it is also used in joints, depending on the connection conditions of the two types of joints; one-touch joints and caulking joints.

**NOTICE**

**Since the function and quality of nylon tubes and joints are guaranteed as tube and joint sets, the use of parts other than Hino Genuine Parts must be avoided.**

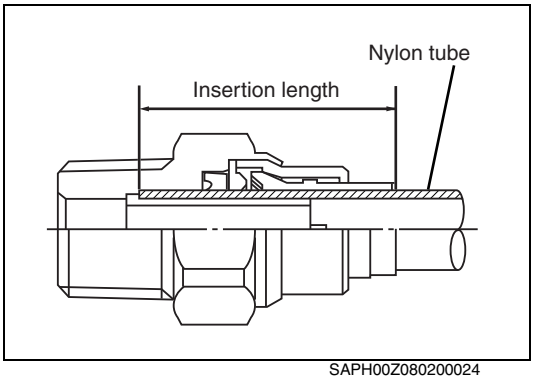


SAPH00Z080200024

**1. ONE-TOUCH JOINT NYLON TUBE INSERTION LENGTH**

| DIAMETER (Outside diameter x inside diameter) | INSERTION LENGTH mm {in.} |
|---|---|
| 1/4 in. | 14-19 {0.55-0.75} |
| 3/8 in. | 18-23 {0.71-0.91} |
| 1/2 in. | 21-26 {0.83-1.02} |

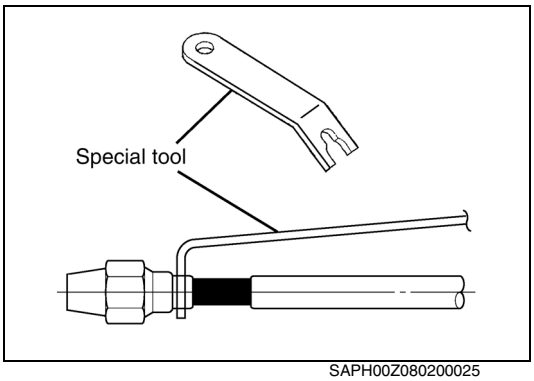


SAPH00Z080200025

**2. REMOVAL OF A ONE-TOUCH JOINT**

(1) Make sure there is no dirt or grease stuck to the connector end. If the end is dirty, clean it thoroughly by air blowing or other means.

(2) Using the special tool for removing the nylon tube to push the connector end, pull off the nylon tube with your hand in one stroke, without stopping partway, pulling the tube in the connector axial direction.
**SST: Puller (S0942-11490)**

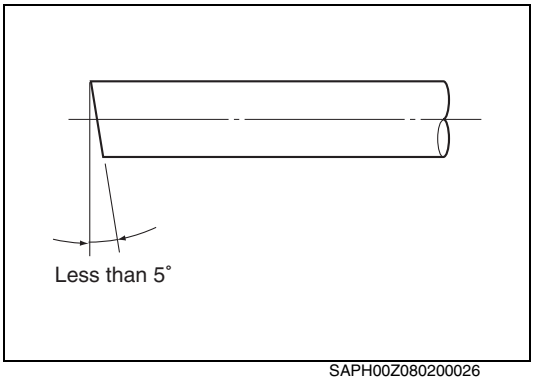


SAPH00Z080200026

## INSTALLATION OF A ONE-TOUCH JOINT AND CAULKING JOINT

- Make sure the joint interior is free of dirt grease. If the interior is dirty, clean it thoroughly by air blowing or other means.
- Cut off the tube end where the tube surface is scarred by the joint pinch marks, and make sure that the part of the tube inserted into the joint has no surface damage. If the tube is damaged, cut off the damaged part (provided that the tube length is more than sufficient).

**NOTICE**

**Use the special nylon tube cutter when cutting the nylon tube, and cut the tube so that the angle of the cut end to the axial center is 85-95°.**

**1. INSTALLATION OF A ONE-TOUCH JOINT**

- Before inserting the tube, mark the insertion length on the tube with a white-out pen or similar implement, in accordance with the dimensions, "ONE-TOUCH JOINT NYLON TUBE INSERTION LENGTH." Then insert the tube firmly in place as far as the marked point.

**2. INSTALLATION OF A CAULKING JOINT**

- Press in the tube so that it does not move (will not come out), and tighten the sleeve nut with the tightening tool to the torque shown in the following table.

**3. NYLON TUBE NUT TIGHTENING TORQUE**

**Unit: N·m {kgf·cm, lbf·ft}**

| NUT DIAMETERS | TIGHTENING TORQUE |
|---|---|
| ϕ1/4 in. | 20-26 {200-270, 15-19} |
| ϕ3.8 in. | 35-45 {350-460, 26-33} |
| ϕ1/2 in. | 50-60 {500-610, 37-44} |

**NOTICE**
**Nuts must be tightened to 5°- 35°C.**

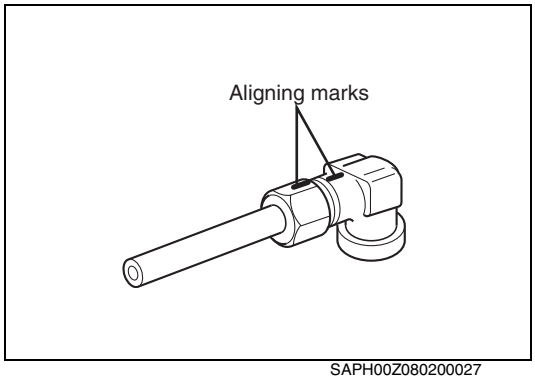

SAPH00Z080200027

**4. ASSEMBLING THE CAULKING JOINT (AFTER THE TUBE HAS FIRST BEEN REMOVED FROM THE JOINT AND THEN RE-INSTALLED IN THE SAME PLACE)**

(1) Make aligning marks on the connector and union to mark their positions before loosening the nut.

(2) When re-assembling the joint, tighten the nut until the pre-disassembly position (position of aligning marks) is reached, and then tighten the nut 60° more.

(3) Always check air leakage after assembling the joint. If air is leaking from the joint, continue tightening the sleeve nut until the leak stops.

(4) If the air leak does not stop, replace the tube, sleeve, and insert with new parts. If the air leak still continues, replace the nut and connector / union.

**NOTICE**

- **During repair or other work, make sure the temperature limit of the nylon tube is within -40-90°C, especially during paint drying work.**
- **During boring, welding, sanding, and other work, protect nylon tubes from tools, cuts, heat sources, and sparks, or remove the nylon tubes beforehand.**
- **Do not attach a welding equipment clamp near the nylon tube.**
- **Do not pour battery fluid or other acidic fluid on the nylon tube.**
- **Do not bend the nylon tube beyond the nylon tube bending radius R values shown in the following table. Also, do not use the remaining portion of a tube that has broken due to overbending.**

| OUTSIDE DIAMETER OF TUBE | MINIMUM BENDING RADIUS DURING HANDLING: R mm {in.} |
|---|---|
| ϕ1/2 in. | 30 {1.18} |
| ϕ3/8 in. | 65 {2.56} |
| ϕ1/2 in. | 70 {2.76} |

# METRIC INFORMATION

EN00Z08021200001

## METRIC FASTENERS

1. **Most threaded fasteners on the Hino trucks series are metric. Be careful not to mix them up with threaded fasteners using the inch system. Mismatched or incorrect bolts, nuts and screws can cause damage or malfunction, resulting in personal injury and/or property damage.**

2. **When bolts, nuts and screws are removed from the vehicle, they should be kept for reuse whenever possible. If they are not re-usable, parts that are equivalent to the original parts in dimensions, strength, and thread pitch must be selected.**

3. **Most original bolts are marked with identification numbers indicating the strength of the bolts. The markings are shown below.**

4. **When replacing bolts, be careful to use bolts with the same markings as the original bolts.**

Nomenclature for bolts

Metric system

Bolt M12-1.75 25

D T L

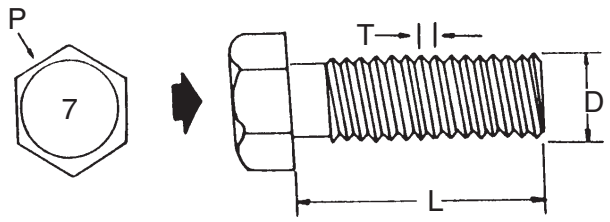


Bolt strength identification

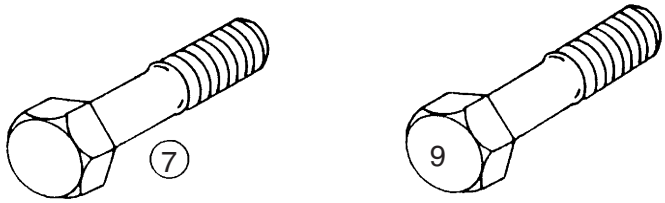


D- Nominal Diameter (millimeters)
L- Length (millimeters)
P- Property Class (bolt strength)
T- Thread Pitch (thread width crest to crest millimeters)

Metric Bolts P Identification class numbers correspond to bolt strength. Increasing numbers represent increasing strength.

SAPH00Z080200028

## DECIMAL AND METRIC EQUIVALENTS

| Fractions | Decimal In. | Metric mm. | Fractions | Decimal In. | Metric mm. |
|---|---|---|---|---|---|
| 1/64 | 0.015625 | 0.397 | 33/64 | 0.515625 | 13.097 |
| 1/32 | 0.03125 | 0.794 | 17/32 | 0.53125 | 13.494 |
| 3/64 | 0.046875 | 1.191 | 35/64 | 0.546875 | 13.891 |
| 1/16 | 0.0625 | 1.588 | 9/16 | 0.5625 | 14.288 |
| 5/64 | 0.078125 | 1.984 | 37/64 | 0.578125 | 14.684 |
| 3/32 | 0.09375 | 2.381 | 19/32 | 0.59375 | 15.081 |
| 7/64 | 0.109375 | 2.778 | 39/64 | 0.609375 | 15.478 |
| 1/8 | 0.125 | 3.175 | 5/8 | 0.625 | 15.875 |
| 9/64 | 0.140625 | 3.572 | 41/64 | 0.640625 | 16.272 |
| 5/32 | 0.15625 | 3.969 | 21/32 | 0.65625 | 16.669 |
| 11/64 | 0.171875 | 4.366 | 43/64 | 0.671875 | 17.066 |
| 3/16 | 0.1875 | 4.763 | 11/16 | 0.6875 | 17.463 |
| 13/64 | 0.203125 | 5.159 | 45/64 | 0.703125 | 17.859 |
| 7/32 | 0.21875 | 5.556 | 23/32 | 0.71875 | 18.256 |
| 15/64 | 0.234375 | 5.953 | 47/64 | 0.734375 | 18.653 |
| 1/4 | 0.250 | 6.35 | 3/4 | 0.750 | 19.05 |
| 17/64 | 0.265625 | 6.747 | 49/64 | 0.765625 | 19.447 |
| 9/32 | 0.28125 | 7.144 | 25/32 | 0.78125 | 19.844 |
| 19/64 | 0.296875 | 7.54 | 51/64 | 0.796875 | 20.241 |
| 5/16 | 0.3125 | 7.938 | 13/16 | 0.8125 | 20.638 |
| 21/64 | 0.328125 | 8.334 | 53/64 | 0.828125 | 21.034 |
| 11/32 | 0.34375 | 8.731 | 27/32 | 0.84375 | 21.431 |
| 23/64 | 0.359375 | 9.128 | 55/64 | 0.859375 | 21.828 |
| 3/8 | 0.375 | 9.525 | 7/8 | 0.875 | 22.225 |
| 25/64 | 0.390625 | 9.922 | 57/64 | 0.890625 | 22.622 |
| 13/32 | 0.40625 | 10.319 | 29/32 | 0.90625 | 23.019 |
| 27/64 | 0.421875 | 10.716 | 59/64 | 0.921875 | 23.416 |
| 7/16 | 0.4375 | 11.113 | 15/16 | 0.9375 | 23.813 |
| 29/64 | 0.453125 | 11.509 | 61/64 | 0.953125 | 24.209 |
| 15/32 | 0.46875 | 11.906 | 31/32 | 0.96875 | 24.606 |
| 31/64 | 0.484375 | 12.303 | 63/64 | 0.984375 | 25.003 |
| 1/2 | 0.500 | 12.7 | 1 | 1.00 | 25.4 |

# SPECIFIED TORQUE FOR STANDARD BOLTS AND NUTS

EN00Z08023200001

Unit: N·m {kgf·cm, lbf·ft.}

| Class | 4T | 7T | 9T |
|---|---|---|---|
| Representation / Diameter | 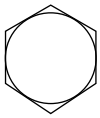 No Mark |    |   |
| M6 | 4.4-6.6 {45-67, 3.3-4.8} | 7.2-10.8 {74-110, 5.4-7.9} | 9.5-13.5 {94-140, 6.8-10.1} |
| M8 | 11.5-16.5 {114-172, 8.3-12.4} | 18.0-26.0 {179-269, 13.0-19.4} | 23.5-34.5 {237-355, 17.2-25.6} |
| M10 | 22.0-32.0 {221-331, 16.0-23.9} | 34.5-51.5 {351-527, 25.4-38.1} | 46.0-68.0 {466-698, 33.7-50.4} |
| M12 | 38.5-57.5 {392-588, 28.4-42.5} | 61.0-91.0 {621-931, 44.9-67.3} | 80.0-120.0 {816-1,224, 59.0-88.5} |
| M14 | 62.0-92.0 {629-943, 45.5-68.1} | 96.0-144.0 {976-1,464, 70.6-105.8} | 128.0-192.0 {1,304-1,956, 94.3-141.4} |
| M16 | 96.0-144.0 {976-1,464, 70.6-105.8} | 152.0-228.0 {1,552-2,328, 112.3-168.3} | 200.0-300.0 {2,040-3,060, 147.5-221.2} |
| M18 | 132.0-198.0 {1,344-2,016, 97.2-145.7} | 208.0-312.0 {2,120-3,180, 153.3-229.9} | 276.0-414.0 {2,816-4,224, 203.6-305.4} |
| M20 | 188.0-282.0 {1,920-2,880, 138.8-208.2} | 296.0-444.0 {3,024-4,536, 218.7-327.9} | 392.0-588.0 {4,000-6,000, 289.3-433.8} |
| M22 | 256.0-384.0 {2,616-3,924, 189.2-283.7} | 405.0-605.0 {4,120-6,180, 297.9-446.8} | 540.0-800.0 {5,470-8,210, 395.5-593.6} |
| M24 | 324.0-486.0 {3,304-4,956, 238.9-358.3} | 515.0-765.0 {5,220-7,840, 377.5-566.8} | 680.0-1,010.0 {6,900-10,340, 499.0-747.6} |

# SPECIFIED TORQUE FOR FLANGE BOLTS AND NUTS

EN00Z0802C100002

Unit: N·m {kgf·cm, lbf·ft.}

| Class / Diameter | 7T | 9T | 12T | Shape |
|---|---|---|---|---|
| M8 | 18.0-26.0 {184-265, 13.3-19.2} | — | — | 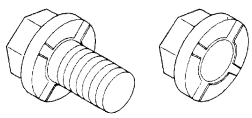 |
| M10 | 41.5-61.5 {421-631, 30.5-45.6} | 55.0-82.0 {560-840, 40.5-60.7} | — | |
| M12 | 73.0-109.0 {744-1,116, 53.8-80.7} | 96.0-114.0 {979-1,469, 70.8-106.2} | — | |
| M14 | — | — | 86.0-142.0 {877-1,448, 63.4-104.7} | 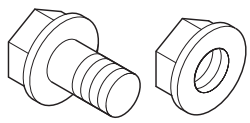 |

## With new flange (w/o grooves)

**Unit: N·m {kgf·cm, lbf·ft.}**

| Class / Diameter | 8.8T | 10.9T | Shape |
|---|---|---|---|
| M8 | 21.7-40.3 {221-411, 16.0-29.7} | 27.3-50.7 {278-517, 20.1-37.4} | |
| M10 | 24.5-45.5 {250-464, 18.1-33.6} | 32.7-60.3 {333-615, 24.1-44.5} | |
| M12 | 44.1-81.9 {450-835, 32.5-60.4} | 57.4-106.6 {585-1087, 42.3-78.6} | |
| M14 | — | 91-169 {928-1723, 67.1-124.6} 104-156* {106-1590, 76.7-115.1} | |

# RECOMMENDED LUBRICANTS

EN00Z0802H600001

| No. | LUBRICANTS | POSITONS | VISCOSITY RECOMENDATIONS (SAE) |
|---|---|---|---|
| 1 | Engine oil<br>API: CJ-4<br>JASO: DH-2<br>ACEA: E–6, E-9 | Cylinder Block | 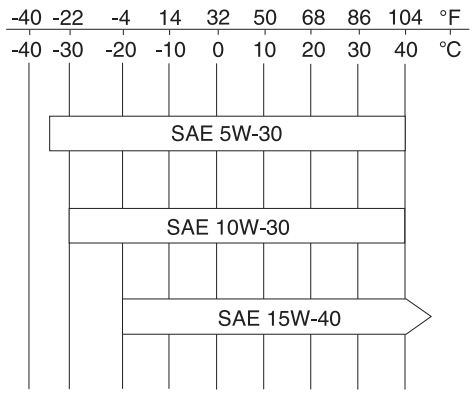 |

| No. | LUBRICANTS | POSITONS | ATMOSPHERIC TEMP. | S.A.E. No |
|---|---|---|---|---|
| 2 | Heavy duty engine oil MIL-L-2104D, API-CD, or Cat TO-4 | EATON Fuller® FS-5406A,FS-6406A | Above 10°F (–12°C) | 50 |
| | | | Above 10°F (–12°C) | 40 |
| | | | Below 10°F (–12°C) | 30 |
| | Automotive gear oil API-MT-1 | | Above 10°F (–12°C) | 80W-90 |
| | | | Below 10°F (–12°C) | 75W |
| 3 | Mobil Delvac Synthetic Transmission Fluid 50, Shell SPIRAX GSX SAE 50, EATON Roadranger SAE 50, EATON Approved Synthetic Transmission oil, or equivalent (See Eaton Lubrication Manual for detail) | EATON Fuller® FS-5406A, FS-6406A | All | 50 |
| 4 | Automatic transmission fluid; TES 389-approved fluid | Allison® 2200HS, 2200RDS, 2500RDS, 2500HS, 3000RDS, 3500RDS | — | — |
| | Automatic transmission fluid; TES 295-approved fluid | Allison® 2200HS, 2200RDS, 2500RDS, 2500HS, 3000RDS, 3500RDS | | |
| 5 | Axle lubricant Non- Extended Drain Lubricants (Petroleum with EP Additives) (API GL-5) (MIL-PRF-2105E and SAE J2360) | Rear axle | Above 10°F (–12°C) | 85W/140 |
| | | | Above –15°F (–26°C) | 80W/140 |
| | | | Above –15°F (–26°C) | 80W/90 |
| | | | Above –40°F (–40°C) | 75W/90 |
| | | | From –40°F (–40°C) to –35°F (2°C) | 75W |
| | | | Above –40°F (–40°C) | 75W/140 |
| | Axle lubricant Extended Drain Lubricants (Petroleum with EP Additives) (API GL-5) (MIL-PRF-2105E and SAE J2360) | | Above –15°F (–26°C) | 80W/90 |
| | | | Above –15°F (–26°C) | 80W/90 |
| | | | Above –40°F (–40°C) | 75W/140 |
| | | | Above –40°F (–40°C) | 75W/90 |

| No. | LUBRICANTS | POSITONS |
|---|---|---|
| 6 | POWER STEERING FLUID (ATF DEXRON® 2 or 3) | Integral Power Steering Gear |
| 7 | BRAKE AND CLUTCH FLUID (DOT-3) or (DOT-4) | Brake & Clutch |
| 8 | WHEEL BEARING GREASE (MIL-G-10924B/18709A) (N.L.G.I.'s No.2 LITHIUM-SOAP) | Propeller Shaft Universal Joint and Slip Joint |
| 9 | HEAT RESISTANCE GREASE (MIL-G-22615/23549/21164) (N.L.G.I.'s No.2 or No.3) | Clutch Disc Hub Spline<br>T/M Main Drive Shaft Spline<br>Q-Plus Brake (Retainer Clip, Anchor Pin, Roller (Journal only), Camshaft, Automatic Slack Adjuster, Clevis Pin) Parking Brake (Camshaft, Anchor Pin, Shoe web) |
| 10 | SPECIAL GREASE (KLUBER GLKO) | B-Frame Disc Brake (Guide buss, Caliper body, Piston) |
| 11 | STARTER GREASE (N.L.G.I.'s No.2 LITHIUM-SOAP) | Bushing, Clutch, Drive Shaft, Pinion Shaft Lever & Reduction Gear |
| 12 | BEARING GREASE (N.L.G.I.'s No.2 LITHIUM-SOAP) | Clutch Release Sleeve<br>Clutch Release Shaft<br>Alternator Bearing<br>Starter Bearing |
| 13 | CHASSIS GREASE (MIL-G-17740) (N.L.G.I.'s No.1 CALCIUM or LITHIUM-SOAP) | Chassis Grease Fitting |
| 14 | LONG LIFE COOLANT | Engine, Radiator |
| 15 | Mobil Synthetic 75W-90 | Front Wheel Hub (Oil Lubricated Bearings) |

| No. | LUBRICANTS | POSITONS | SHEEL | MOBIL | EXXON |
|---|---|---|---|---|---|
| 16 | LITHIUM BASE DISULFIDE MOLYBDENUM GREASE | Drag Link & Tie Rod Ball Joint | Retinax AM | Mobil Grease Special | Beacon Q2 |

# VEHICLE LIFT AND SUPPORT LOCATIONS

EN00Z0802A200001

**1. NOTICE ABOUT VEHICLE CONDITION WHEN JACKING UP**

(1) As a rule, vehicle must be in an unloaded condition and never jack up or lift up the vehicle with things of heavy weight.

(2) If removing any things of heavy weight like the engine and transmission, the center of gravity of the vehicle moves. Therefore, place a balance weight so as to keep it from rolling, or hold the jacking support location using the transmission jack.

**2. NOTICE FOR USING 4 POST LIFT**

(1) Follow the instruction manual for a safety operation.

(2) Do not damage tires or wheels with a free wheel beam.

(3) Using a wheel stopper, fix the vehicle.

**3. NOTICE FOR USING JACK AND SAFETY STAND**

(1) Work in a flat place using a wheel stopper all the time.

(2) Support the specified location with a jack and safety stand accurately.

(3) Do not work or leave the vehicle supported only by a jack. Be sure to support the vehicle together with a safety stand.

(4) Be careful and accurate in jacking up and down the vehicle.

(5) Care must be taken when jacking up and supporting the vehicle. Be sure to lift and support the vehicle at the proper locations.

- Cancel the parking brake on a level place and shift the transmission in Neutral.
- When jacking up the front wheels of the vehicle at first place stoppers behind the rear wheels.
- When jacking up the rear wheels of the vehicle at first place stoppers behind the front wheels.
- When either the front or rear wheels only should be jacked up, set safety stands and place stoppers in front and behind the other wheels on the ground.
- After the vehicle is jacked up, be sure to support it on the safety stands. It is extremely dangerous to perform any work on a vehicle raised on a jack alone, even for a small job that can be finished quickly.

Front

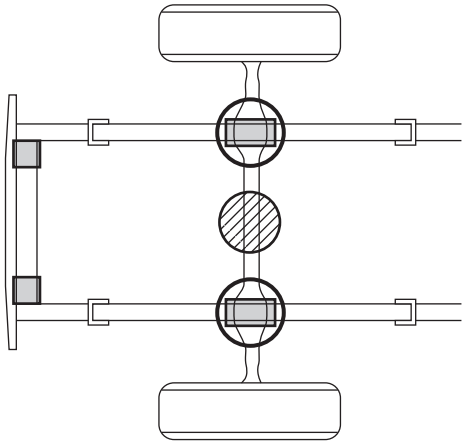

Rear

Leaf suspension

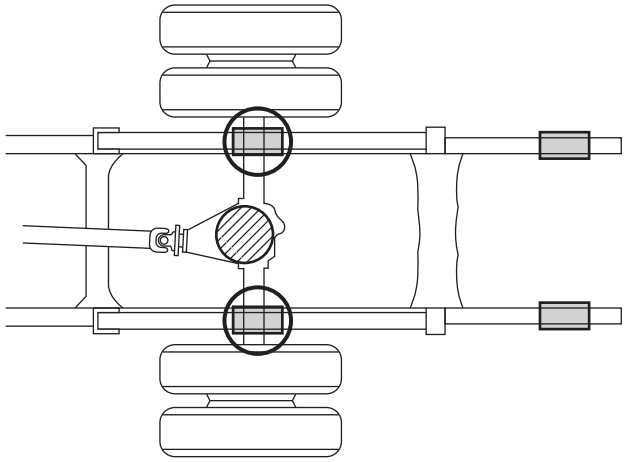

Air suspension

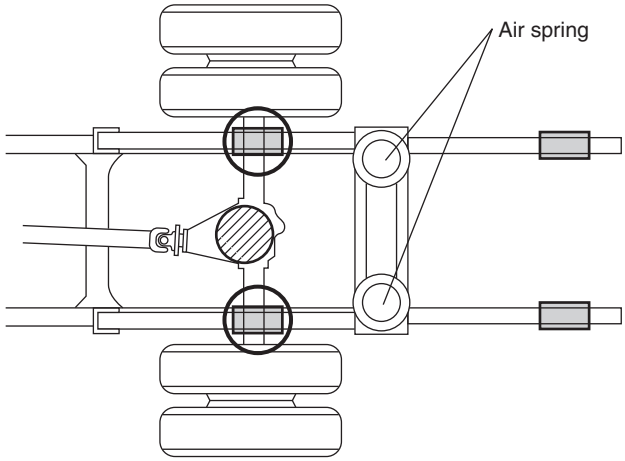


**Garage jack position**

Front --------- Center of front axle beam

Rear --------- Center of rear axle housing

**Oil jack position**

**Support position**

Safety stand ----------

If necessary, remove the front bumper.

SAPH00Z080200035

# INFORMATION DISPLAY

EN00Z0802A200002

## 1. INFORMATION DISPLAY ITEMS

- Information display shows following items.

(1) Ordinary display
Trip meter, voltage, date, fuel consumption, average speed and engine or vehicle maintenance information etc.

(2) Warning display
The warning display is automatically displayed and shows messages.

**NOTICE**

- **When turn the key to "ON" position, display shows last message. But in case of device operating, the warning display is prior to ordinary display.**

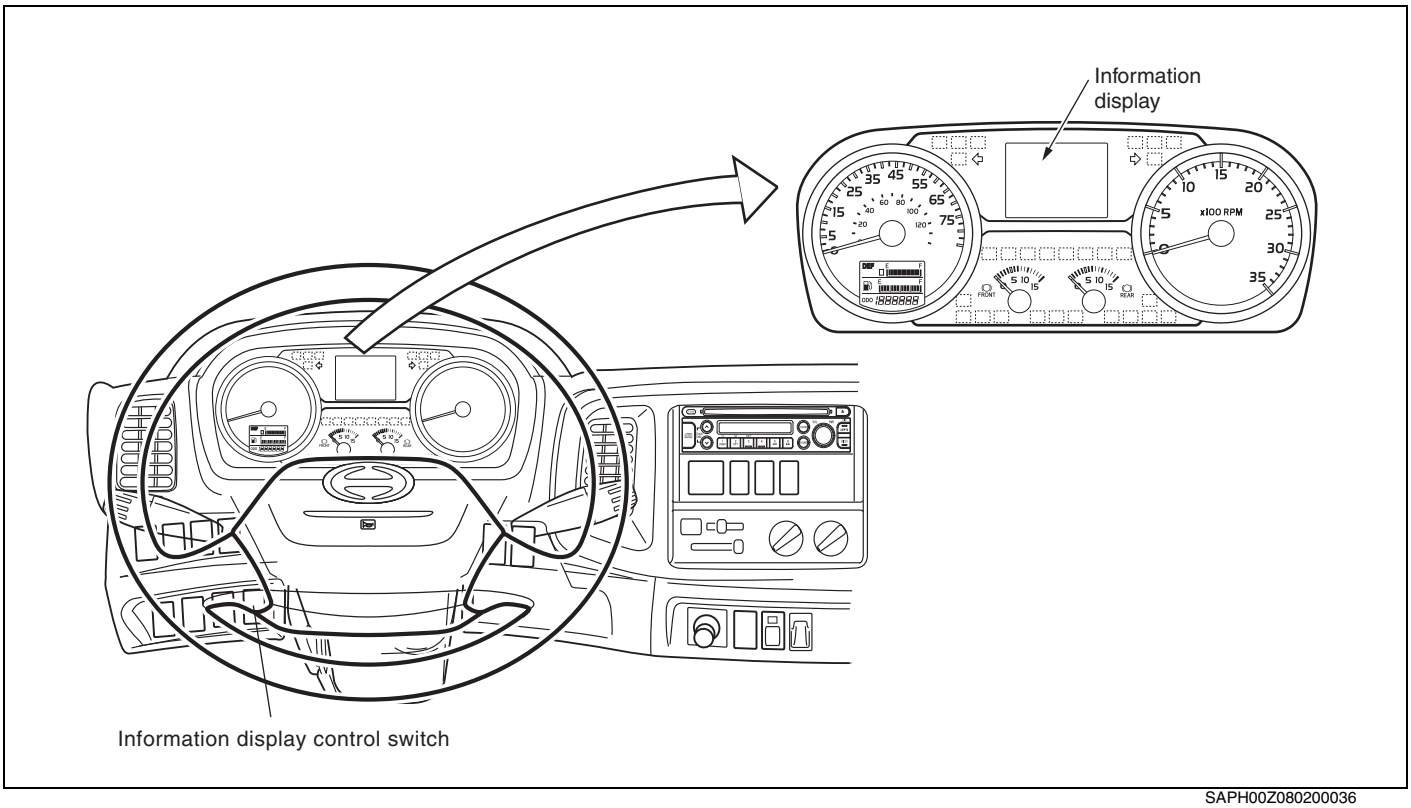


SAPH00Z080200036

## 2. INFORMATION DISPLAY CONTROL SWITCH

- The following information is shown with the key turned on. Each time you push the "MODE" button, the displayed information is changed.

**NOTICE**

- **Diagram on the next page shows the operation method of the information display.**
- **If you push and hold "SET/RESET" button, as the display case, data may be reset.**
- **Press the "MODE" button more than 1 second to release the warning information.**

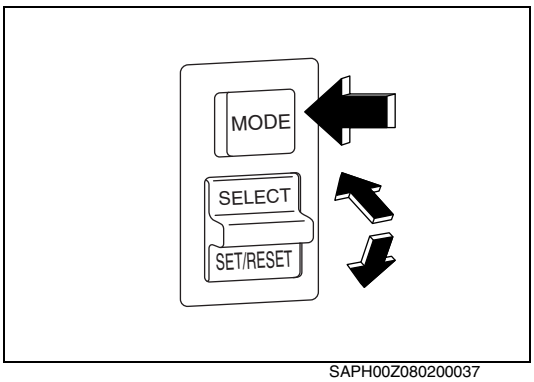


SAPH00Z080200037

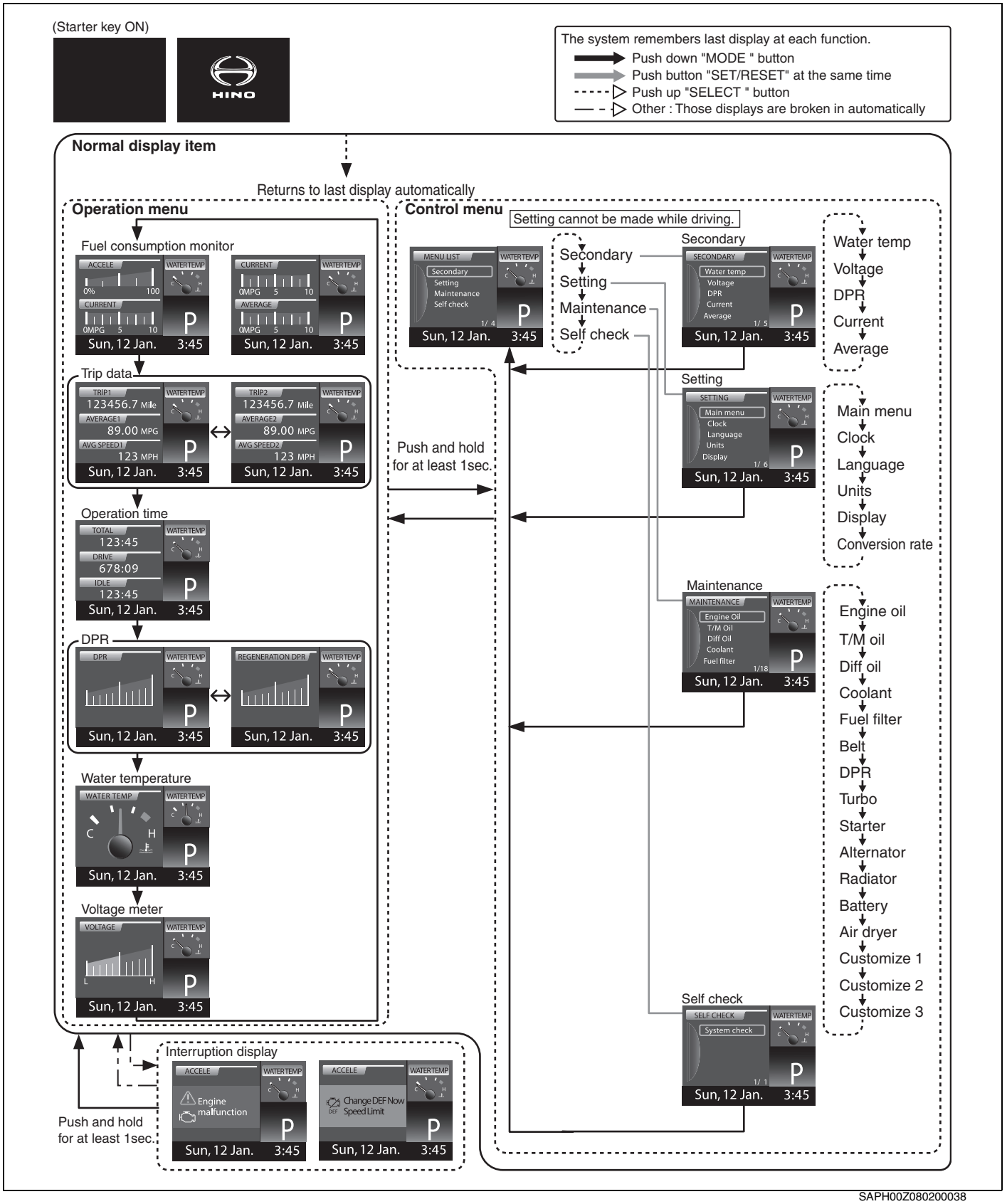


SAPH00Z080200038

**3. WARNING DISPLAY**

(1) Warning display

| Display | Warning Display remarks |
|---|---|
|  | Engine control system has malfunction. This is important and must be addressed immediately. |
| 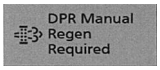 | DPR cleaner needs to be manually regenerated. |

**NOTICE**

- **The display shows DPR MANUAL REGEN REQUIRED with the buzzer sound when DPR cleaner needs to be manually regenerated.**

(2) Information display

| Display | Display remarks |
|---|---|
|  | Appears when idling is stopped due to emergency. |
| 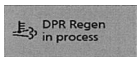 | DPR regenerate on time. |
| 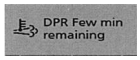 | DPR remaining for few minute. |
|  | DPR regenerate completed. |
|  | DPR regeneration interrupted, push DPR button to resume. |

**NOTICE**

- **The DPR system automatically regenerates when the quantity of soot collected in the DPR cleaner exceeds a specific quantity. This prevents an abnormal accumulation of soot and keeps the DPR cleaner in good condition. Use of high-performance catalyst and an electronically controlled common rail fuel injection system has made it possible to burn (regenerate) the soot while driving.**

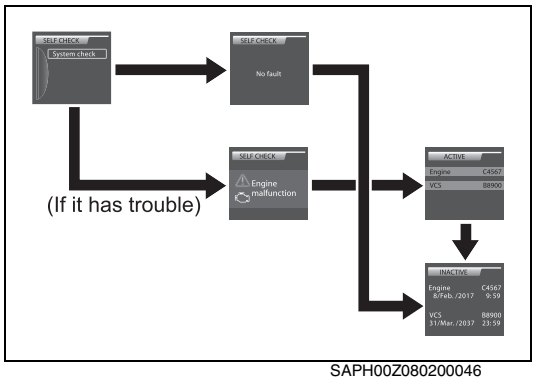

SAPH00Z080200046

**4. SELF DIAGNOSIS SYSTEM**

If the vehicle has fault, display shows the trouble.

(1) Select to "Self check" and push "SET/RESET" button.

(2) Select to "System check" and push "SET/RESET" button, display shows "No fault" in case of no trouble. If it has trouble, display shows fault item.

(3) If display shows trouble warning, Immediately get the vehicle checked and repaired at an authorized Hino dealer.

(4) In case of "Engine malfunction" displayed, push and hold "SELECT" button for more than 1 sec. until the display shows trouble code. Push "SELECT" button, display shows another trouble codes, if there are.

(5) Push and hold "SELECT" button for longer than 1 sec. to display the "Inactive".

(6) Trouble code display

| Initial Display | Remarks |
|---|---|
|  | It has no trouble. |
|  | It has trouble. |
| 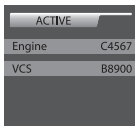 | Yellow background.<br>It has trouble code, now.<br>Get the vehicle checked and repaired. |
| 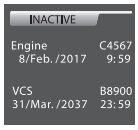 | It had trouble code, previously. |

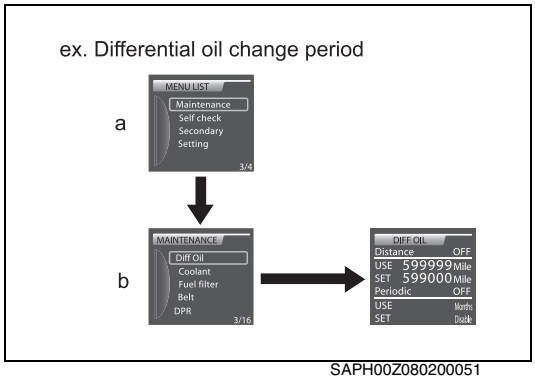

SAPH00Z080200051

**5. RESETTING PROCEDURE**

EX.Differential oil change period

(1) Scroll up and select "Maintenance" and push "SET/RESET" button.

(2) Scroll up and select the preferred setting item and push "SET/RESET" button.

(3) Push and hold "SET/RESET" button for longer than 1 sec.

**NOTICE**

- **In the case of the other item on trouble code, data may be reset as the same procedure.**
- **But, especially in the case of "DPR", push and hold "MODE" and "SET/RESET" button at the same time for more than 20sec. to reset. (Following to the low, use only at an authorized Hino dealer.)**

**6. AVAILABLE SETTING ITEMS**

- Engine oil
- T/M oil
- Diff oil
- Coolant
- Fuel filter
- Belt
- DPR
- Turbo
- Starter
- Alternator
- Radiator
- Battery
- Air dryer
- Customize1
- Customize2
- Customize3

# SYMPTOM SIMULATION

EN00Z0802A200003

**HINT**

**The most difficult case in troubleshooting is when no problem symptoms occur. In such a case, a thorough problem analysis must be carried out. A simulation of the same or similar conditions and environment in which the problem occurred in the customer's vehicle should be carried out. No matter how much skill or experience a technician has, troubleshooting without confirming the problem symptoms will lead to important repairs being overlooked and mistakes or delays.**

**For example:**

**With a problem that only occurs when the engine is cold or as a result of vibration caused by the road during driving, the problem can never be determined if the symptoms are being checked on a stationary vehicle or a vehicle with a warmed-up engine. Vibration, heat or water penetration (moisture) is difficult to reproduce. The symptom simulation tests below are effective substitutes for the conditions and can be applied on a stationary vehicle. Important points in the symptom simulation test: In the symptom simulation test, the problem symptoms as well as the problem area or parts must be confirmed. First, narrow down the possible problem circuits according to the symptoms. Then, connect the tester and carry out the symptom simulation test, judging whether the circuit being tested is defective or normal. Also, confirm the problem symptoms at the same time. Refer to the problem symptoms table for each system to narrow down the possible causes.**

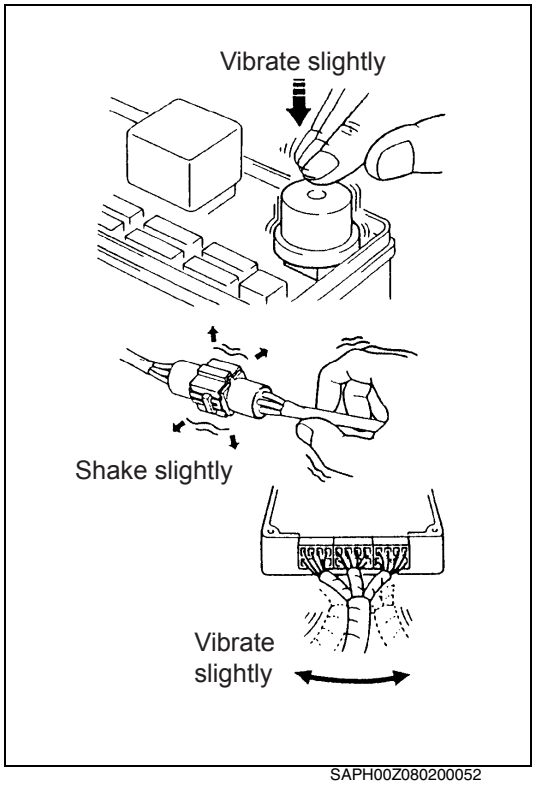


SAPH00Z080200052

**1. VIBRATION METHOD: When malfunction seems to occur as a result of vibration.**

(1) PART AND SENSOR
Apply slight vibration with a finger to the part of the sensor suspected to be the cause of the problem, and check whether or not the malfunction occurs.

**NOTICE**

**Applying strong vibration to relays may open relays**

(2) CONNECTORS
Slightly shake the connector vertically and horizontally.

(3) WIRE HARNESS
Slightly shake the wire harness vertically and horizontally.

**HINT**

**The connector joint and fulcrum of the vibration are the major areas that should be checked thoroughly.**

**2. HEAT METHOD: When a malfunction seems to occur when the area in question is heated.**

(1) Heat the component that is the possible cause of the malfunction with a hair dryer or similar device. Check if the malfunction occurs.

**NOTICE**

- **Do not heat to more than 60°C (140°F). Exceeding this temperature may damage components.**
- **Do not apply heat directly to the parts in the ECU.**

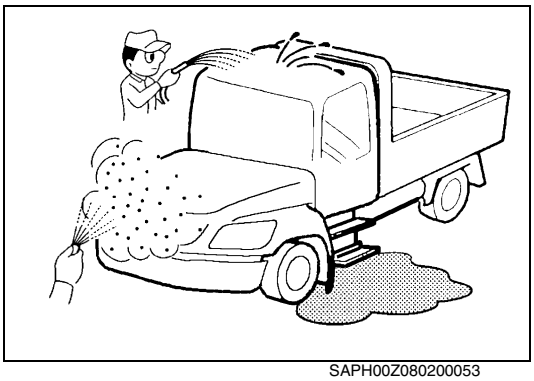

SAPH00Z080200053

**3. WATER SPRINKLING METHOD: When a malfunction seems to occur on a rainy day or in high-humidity.**

(1) Sprinkle water onto the vehicle and check if the malfunction occurs.

**NOTICE**

- **Never sprinkle water directly into the engine compartment. Indirectly change the temperature and humidity by spraying water onto the front of the radiator.**
- **Never apply water directly onto the electronic components.**

**HINT**

**If the vehicle has or had a water leakage problem, the leakage may have damaged the ECU or connections. Look for evidence of corrosion or short circuits. Proceed with caution during water tests.**

**4. HIGH ELECTRICAL LOAD METHOD: When a malfunction seems to occur when electrical load is excessive.**

(1) Turn on the heater blower, headlight, rear window defogger and all other electrical loads. Check if the malfunction reoccurs.

# GLOSSARY

EN00Z08020200005

## DEFINITION OF ABBREVIATION IN THIS MANUAL

### LIST OF ABBREVIATION

| SAE ABBREVIATIONS | SAE TERMS |
|---|---|
| A/C | Air conditioner |
| ABS | Anti-lock Brake System |
| ACC | Accessory |
| AMT | Automated Manual Type |
| ATC | After Turbo catalyst |
| ATF | Automatic Transmission Fluid |
| CA | Crank Angle |
| CAN | Controller Area Network |
| CD-ROM | Compact Disc Read Only Memory |
| CPU | Central Processing Unit |
| dB | Decibel |
| DC | Direct Current |
| D-CAT | Diesel-Clean Advanced Technology System |
| DC motor | Direct Current Motor |
| DCU | Dosing Control Unit |
| DEF | Diesel Exhaust Fluid |
| DPR | Diesel Particulate active Reduction System |
| DSS | Driving Support System |
| ECU | Electronic Control Unit |
| EEPROM | Electronically Erasable and Programmable Read Only Memory |
| EGR | Exhaust Gas Recirculation |
| ELR | Emergency Locking Retractor |
| ENG | Engine |
| ES START | Easy and Smooth start system |
| F/A | Front axle |
| FCCB | Fuel Control Cylinder Balance |
| FCV | Fuel Cutoff Valve |
| FF Shift | Feather touch & Finger shift |
| FL | Fusible link |
| Fr | Front |
| FRP | Fiber Reinforces Plastic |

| SAE ABBREVIATIONS | SAE TERMS |
|---|---|
| FUP | Front Underrun Protector |
| GND | Ground |
| GVW | Gross Vehicle Weight |
| Hi | High |
| HINO DX II | Hino Diagnostic eXplorer II |
| HVAC | Heating, Ventilating and Air-Conditioning unit |
| I.S.C. | Idle Speed Control |
| IC | Integrated Circuits |
| ID | Identification |
| IPD | Intelligent Power Device |
| ISO | International Organization for Standardization |
| JIS | Japanese Industrial Standards |
| LED | Light Emitting Diode |
| LEV | Low Emission Vehicle |
| LH | Left Hand |
| LLC | Long Life Coolant |
| Lo | Low |
| MAX | Maximum |
| MIN | Minimum |
| MS evaporator | Multi-rank and Super slim structure evaporator |
| No | Number |
| NOx | Nitrogen Oxide |
| NMR | No load Maximum Revolution |
| OHC | Over Head Camshaft |
| PC | Personal Computer |
| PCD | Pitch Circle Diameter |
| PCS | Pre-Crash Safety |
| PCV | Pump Control Valve |
| PCV valve | Positive Crankcase Ventilation valve |
| PM | Particulate Matter |
| PPG | Glass-fiber-reinforced Polypropylene |
| PPm | Parts Per Million |
| PS pump | Power Steering Pump |
| PVD | Physical Vapor Deposit |

| SAE ABBREVIATIONS | SAE TERMS |
|---|---|
| PWR | Power |
| QE code | Quick Response Code |
| R/A | Rear axle |
| RH | Right Hand |
| SCR | Selective Catalytic Reduction |
| SW | Switch |
| T/M | Transmission |

# GLOSSARY OF SAE AND HINO TERMS

EN00Z08020200006

This glossary lists all SAE-J2403 terms and abbreviations used in this manual in compliance with SAE recommendation, as well as their HINO equivalents.

| SAE ABBREVIATIONS | SAE TERMS | HINO TERMS ( )--ABBREVIATIONS |
|---|---|---|
| AAT | AMBIENT AIR TEMPERATURE | Ambient Air Temperature |
| ACL | AIR CLEANER | Air cleaner |
| ACL Element | ACL (Air Cleaner) Element | Air Cleaner element |
| ACL Element | AIR CLEANER Element | Air Cleaner element |
| ACL Housing | AIR CLEANER Housing | Air cleaner body assembly |
| ACL Housing Cover | AIR CLEANER Housing Cover | Air Cleaner Housing Cover |
| AFTDEF | AFTERTREATMENT DIESEL EXHAUST FLUID | DEF |
| AFTDEFDU | AFTERTREATMENT DIESEL EXHAUST FLUID DOSING UNIT | DCU |
| AFTDOC | AFTERTREATMENT DIESEL OXIDATION CATALYST | DOC (Diesel Oxidation Catalyst) |
| AFTDOS | AFTERTREATMENT DOSER AFTDOS | Dosing |
| AFTDPF | AFTERTREATMENT DIESEL PARTICULATE FILTER | DPR filter |
| AFTDPFDP | Aftertreatment Diesel Particulate Filter Differential Pressure | DPR differential pressure |
| AFTEGT | AFTERTREATMENT EXHAUST GAS TEMPERATURE | Exhaust gas temperature |
| AP | ACCELERATOR PEDAL | Accelerator pedal |
| AP Sensor | ACCELERATOR PEDAL Sensor | Accelerator Pedal Position Sensor |
| APP | ACCELERATOR PEDAL POSITION | Accelerator Pedal Position |
| CAC | CHARGE AIR COOLER | Intercooler |
| CPP Switch | CLUTCH PEDAL POSITION Switch | Clutch Switch |
| DCC | DIAGNOSTIC CONNECTOR, Cab | Diagnosis connector |
| DCU | DIAGNOSTIC CONNECTOR, Underhood | Diagnosis connector |
| DRIVER | DRIVER | Driver |
| DTC | DIAGNOSTIC TROUBLE CODE | Diagnosis Trouble Code |
| DTM Switch | DIAGNOSTIC TEST MODE Switch | Diagnosis switch |
| EBP | EXHAUST BACK PRESSURE | Back pressure |
| EBP | EXHAUST BACK PRESSURE | Exhaust back pressure |
| EBP Sensor | EXHAUST BACK PRESSURE Sensor | Back pressure sensor |
| EBPR Valve | EXHAUST BACK PRESSURE REGULATOR Valve | Exhaust control valve |

| SAE ABBREVIATIONS | SAE TERMS | HINO TERMS ( )--ABBREVIATIONS |
|---|---|---|
| EC | ENGINE CONTROL | Engine control |
| ECT | ENGINE COOLANT TEMPERATURE | Coolant Temperature |
| ECT | ENGINE COOLANT TEMPERATURE | Water Temperature |
| EFT | ENGINE FUEL TEMPERATURE | Fuel temperature |
| EFT Sensor | ENGINE FUEL TEMPERATURE Sensor | Fuel temperature sensor |
| EGR | EXHAUST GAS RECIRCULATION | EGR |
| EGR Valve | EXHAUST GAS RECIRCULATION Valve | EGR valve |
| EGRT | EXHAUST GAS RECIRCULATION TEMPERATURE | EGR temperature |
| EGRT Sensor | EXHAUST GAS RECIRCULATION TEMPERATURE Sensor | EGR exit temperature sensor |
| EGT | EXHAUST GAS TEMPERATURE | Exhaust gas temperature |
| EI | ELECTRONIC IGNITION | Ignition coil |
| EOP | ENGINE OIL PRESSURE | Oil Pressure |
| EOT | ENGINE OIL TEMPERATURE | Oil Temperature |
| FP | FUEL PUMP | Fuel pump |
| FUEL PRESSURE Sensor | FUEL PRESSURE Sensor | Fuel Pressure sensor |
| GLOW PLUG | GLOW PLUG | Glow plug |
| GND | GROUND | GROUND |
| IA | INTAKE AIR | Air Intake |
| IA System | INTAKE AIR System | Air Intake System |
| IAT | INTAKE AIR TEMPERATURE | Intake temperature |
| IAT Sensor | INTAKE AIR TEMPERATURE Sensor | Intake temperature sensor |
| IDLE | IDLE | idle |
| IMAT | INTAKE MANIFOLD AIR TEMPERATURE | Intake manifold Air temperature sensor |
| IMAT | INTAKE MANIFOLD TEMPERATURE | Intake manifold temperature sensor |
| INJ | INJECTOR | Injector |
| MAF Sensor | MASS AIR FLOW Sensor | Air flow sensor |
| MIL | MALFUNCTION INDICATOR LIGHT | Check engine |
| OSS Sensor | OUTPUT SHAFT SPEED Sensor | Output Speed Sensor |
| OSS Sensor | OUTPUT SHAFT SPEED Sensor | Speed Sensor |
| PC Solenoid Valve | PRESSURE CONTROL Solenoid Valve | Solenoid control valves |
| PCV | POS CRANKCASE VENTILATION | PCV (Positive Crankcase Vent) |
| PCV Valve | POS CRANKCASE VENTILATION Valve | PCV (Positive Crankcase Vent) Valve |
| PCV Valve | POS CRANKCASE VENTILATION Valve | PCV Valve |

| SAE ABBREVIATIONS | SAE TERMS | HINO TERMS ( )--ABBREVIATIONS |
|---|---|---|
| PCV Valve | POSITIVE CRANKCASE VENT Valve | PCV Valve |
| PNP | PARK/NEUTRAL POSITION | Neutral position |
| PNP Switch | PARK/NEUTRAL POSITION Switch | Neutral switch |
| RFP | RAIL FUEL PRESSURE | Common rail Pressure |
| RFP Sensor | RAIL FUEL PRESSURE Sensor | Common rail pressure sensor |
| SPARK PLUG | SPARK PLUG | Spark plug |
| SRI | SERVICE REMINDER INDICATOR | Check engine |
| ST | SCAN TOOL | Diagnostic tool |
| TC | TURBOCHARGER | Turbocharger |
| TCC | TORQUE CONVERTER CLUTCH | Torque Converter |
| TP Sensor | THROTTLE POSITION Sensor | Throttle Sensor |
| TSS Sensor | TURBINE SHAFT SPEED Sensor | Turbine Speed Sensor |
| VAF Sensor | VOLUME AIR FLOW Sensor | Air flow sensor |
| VLS | VEHICLE LIMITING SPEED | Speed Limiter Upper Limit |
| VSS | VEHICLE SPEED SENSOR | Vehicle Speed sensor |

# CLUTCH MAIN UNIT (EATON 1402)

CL02-001

**CLUTCH ASSEMBLY**
**(EATON SAS1402)..... CL02-2**
DATA AND SPECIFICATIONS .....CL02-2
DESCRIPTION .....CL02-2
TROUBLESHOOTING.....CL02-3
SPECIAL TOOL.....CL02-5
COMPONENT LOCATOR.....CL02-6
OVERHAUL .....CL02-7

**CLUTCH ASSEMBLY**
**(EATON SOLO1402)..... CL02-16**
DATA AND SPECIFICATIONS .....CL02-16
COMPONENT LOCATOR.....CL02-16
OVERHAUL .....CL02-17
INSPECTION AND REPAIR .....CL02-27

# CLUTCH ASSEMBLY (EATON SAS1402)

## DATA AND SPECIFICATIONS

EN02Z0202I200001

**CLUTCH FACING** **Unit: mm {in.}**

| | |
|---|---|
| **Material** | **Sintered metal (Ceramic metal)** |
| **Type** | **Dry two plate with damper spring** |
| **Inside diameter** | **222 {8.8}** |
| **Outside diameter** | **350 {13.8}** |
| **Thickness** | **11.5 {0.45}** |

## DESCRIPTION

EN02Z0202C100001

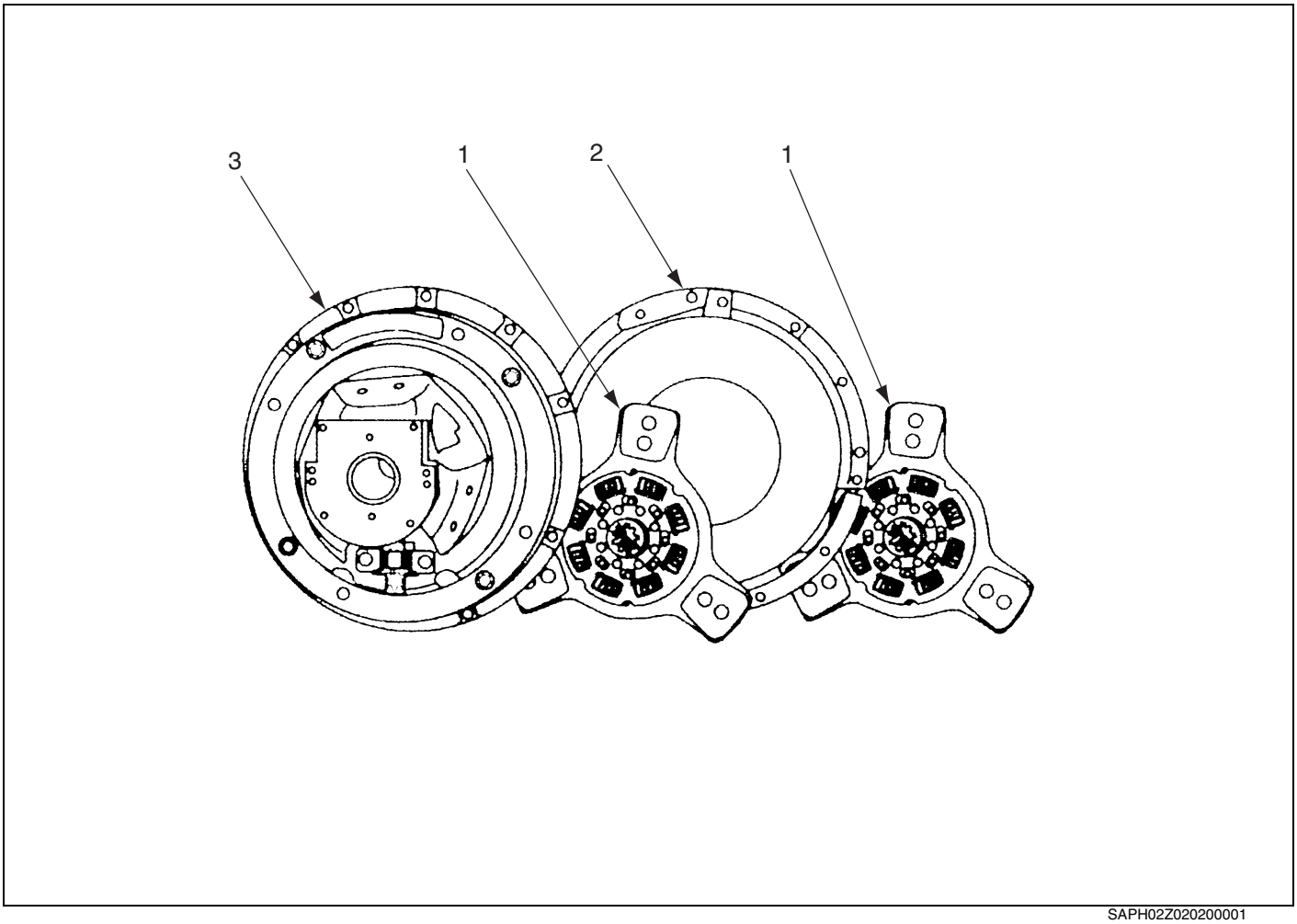


SAPH02Z020200001

| | | | |
|---|---|---|---|
| **1** | **Clutch disc** | **3** | **Clutch cover** |
| **2** | **Intermediate plate** | | |

# TROUBLESHOOTING

EN02Z0202F300001

| Symptom | Possible cause | Remedy/Prevention |
|---|---|---|
| **Clutch dragging.** | Clutch disc distorted or warped. | Replace clutch disc. |
| | Transmission input shaft worn. | Replace input shaft and check clutch hub for excessive wear. If worn, replace disc. Check flywheel housing alignment. |
| | Excessive clutch control parts wear. | Replace control parts. |
| | Clutch control parts not functioning properly. | Replace control parts. |
| | Improper clutch control adjustment. | Adjust clutch control. |
| | Clutch disc assembly too thick. | Replace clutch disc. |
| **Clutch slipping.** | Release lever and release bearing clearance incorrectly adjusted. | Adjust clearance. |
| | Clutch disc facing gummed with oil or grease. | Replace disc assembly. |
| | Release bearing worn. | Replace bearing. |
| | Clutch pedal free-play incorrectly adjusted. | Adjust free-play. |
| | Compression spring weak. | Replace cover assembly. |
| | Clutch facing worn. | Replace disc assembly. |
| | Failing to remove plate from the clutch pressure plate assembly. | Remove plate. |
| | Driver riding clutch pedal. | Do not ride the clutch pedal. |
| **Vehicle vibrates when starting.** | Improper engine idling. | Adjust idling. |
| | Clutch control incorrectly adjusted. | Adjust clutch control. |
| | Clutch disc facing gummed with oil or grease. | Replace disc assembly. |
| | Glazed flywheel friction surface. | Deglaze flywheel surface with coarse emery cloth, stroking parallel to machining lines. |
| | Clutch disc distorted or warped. | Replace disc. |
| | Improper clutch cover tightening. | Tighten bolts. |
| | Flywheel housing misalignment. | Replace flywheel housing. |
| **Abnormal noise in transmission.** | Malfunction of engine. | Tune up engine. |
| | Improper clutch disc used. | Replace proper clutch disc. |
| | Trouble in transmission. | Check transmission. |
| | The engine idle speed is low. | Increase the idle speed. |

| Symptom | Possible cause | Remedy/Prevention |
|---|---|---|
| **Noisy clutch.** | Release bearing worn or dried. | Replace release bearing. |
| | Pilot bearing worn or dried. | Replace pilot bearing. |
| | Clutch disc distorted or warped. | Replace clutch disc. |
| | Flywheel housing misalignment. | Replace flywheel housing. |
| | Transmission input shaft or clutch disc spline worn. | Clean and lubricate or replace. |
| | Insufficient lubrication of pedal and its accessories. | Lubricate. |
| | Insufficient lubrication of release shaft and release bearing hub. | Lubricate. |
| | Transmission input shaft retainer rusted or soiled. | Clean or replace if rusted. |
| | Clutch pedal free-play incorrectly adjusted. | Adjust free-Play. |
| **Clutch pedal cannot be depressed.** | Clutch control incorrectly adjusted. | Adjust clutch control. |
| | Insufficient lubricant release shaft and release bearing hub. | Lubricate. |
| **Change in clutch pedal give.** | Air trapped in clutch fluid. | Bleed air. |

# SPECIAL TOOL

EN02Z0202K100001

Prior to starting a clutch overhaul, it is necessary to have these special tools.

| Illustration | Part number | Tool name | Remarks |
|---|---|---|---|
| 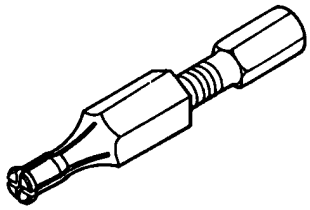 | S0965-01970 | CLUTCH PILOT BEARING PULLER | |
| 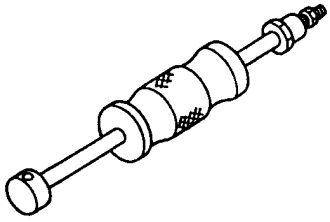 | S0942-01442 | SLIDING HAMMER | |
| 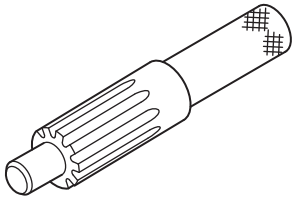 | S0966-21420 | CLUTCH ALIGNING ARBOR | |
| 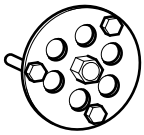 | S0940-91200 | CRANKING TOOL | |

# COMPONENT LOCATOR

EN02Z0202D100001

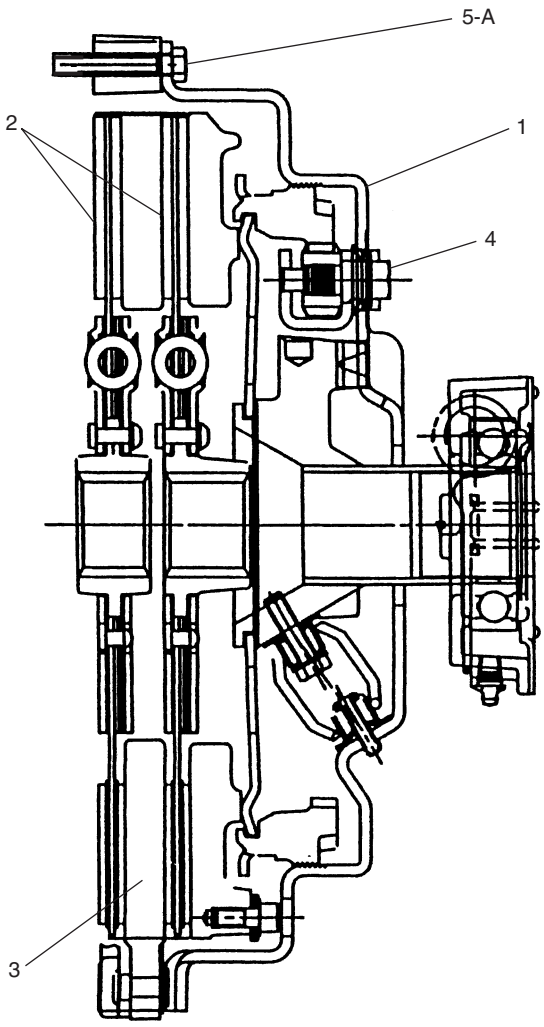


SAPH02Z020200006

| | | | |
|---|---|---|---|
| 1 | Clutch cover | 4 | Adjusting screw |
| 2 | Clutch disc | 5 | Bolt |
| 3 | Intermediate plate | | |

**Tightening torque** **Unit: N·m {kgf·cm, lbf·ft}**

| | | |
|---|---|---|
| A | 37.5-48.5 {383-494, 28-35} | |

# OVERHAUL

EN02Z0202H200001

## IMPORTANT POINT - DISMOUNTING

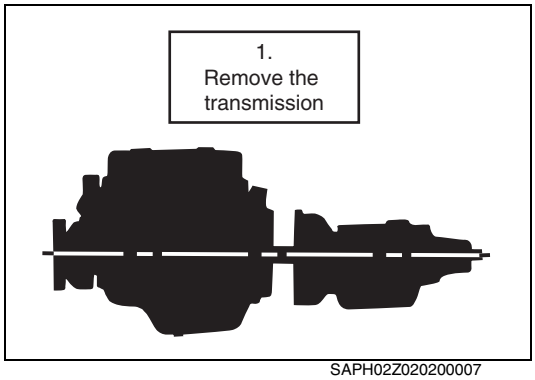

SAPH02Z020200007

**1. REMOVE THE TRANSMISSION, SUPPORTING ITS WEIGHT TO PREVENT DAMAGE TO THE BEARING AND DISCS.**

**2. INSTALL TWO WOODEN SPACERS 1"-1-1/2" THICK BETWEEN RELEASE BEARING AND COVER ASSEMBLY.**

**3. REMOVE THE CLUTCH FROM THE FLYWHEEL.**

## IMPORTANT POINT - INSPECTION AND REPLACEMENT

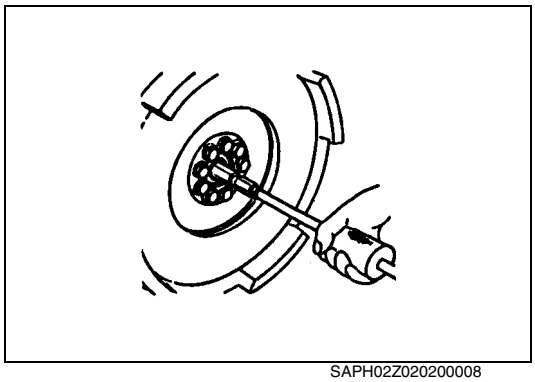
SAPH02Z020200008

**1. REPLACE THE PILOT BEARING.**

(1) Remove the pilot bearing.
**SST:**
**Pilot Bearing Puller (S0965-01970)**
**Sliding Hammer (S0942-01442)**

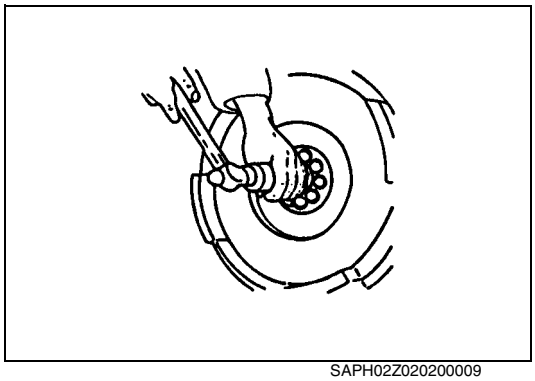
SAPH02Z020200009

(2) Using a suitable tapping rod, install the pilot bearing.

**NOTICE**
**After installing the pilot bearing, ensure that it rotates smoothly.**

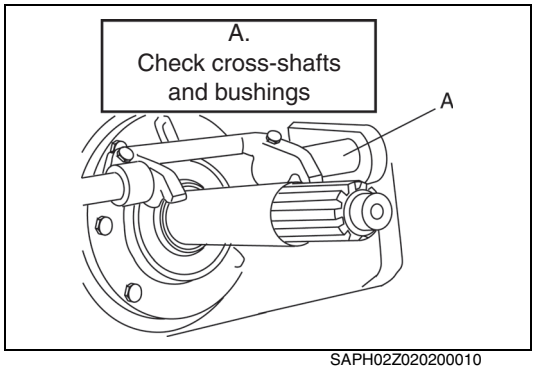

SAPH02Z020200010

**2. CHECK THE FOLLOWING ITEMS FOR WEAR REPLACE ANY WORN COMPONENTS:**

(1) Cross-shafts and bushings

**NOTICE**
**Excessive wear at these points can cause a side loading condition. Also, inspect the remaining pivot points of the linkage for excessive wear.**

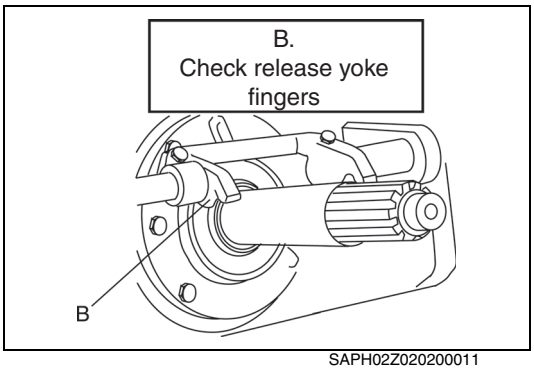

SAPH02Z020200011

(2) Release yoke fingers

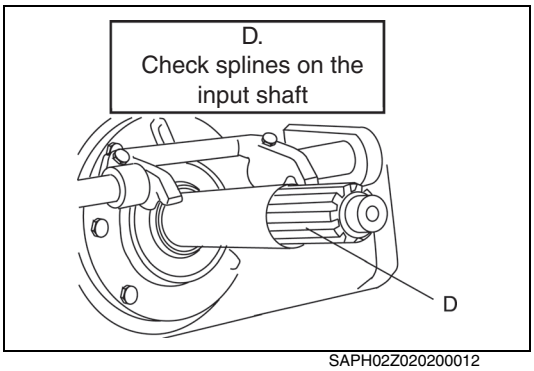

SAPH02Z020200012

(3) Splines on the input shaft

**NOTICE**

**Any wear on the splines will prevent the newly installed driven discs from sliding freely, thus causing poor release (clutch drag). Select a disc out of the new installation and slide it full length on the transmission splines. This will detect a twisted input shaft. Replace input shaft if disc does not freely slide.**

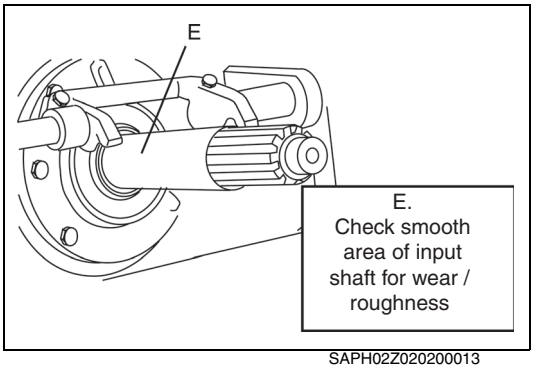

SAPH02Z020200013

(4) Smooth area of input shaft
(5) Mating surfaces

**NOTICE**

**Inspect the mating surfaces of both the transmission bell housing and the flywheel housing. Any appreciable wear on either housing will cause misalignment. Most wear will occur between the 3 and 8 o'clock positions.**

**Replace housings if worn.**

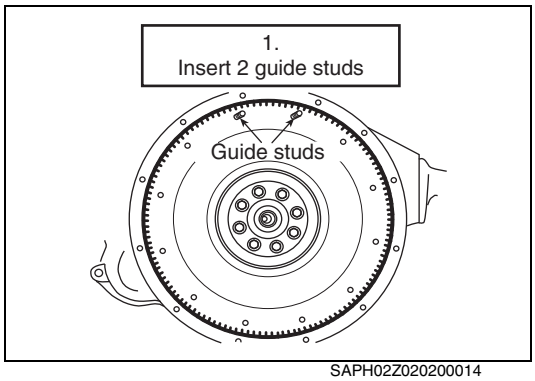

SAPH02Z020200014

## IMPORTANT POINT - MOUNTING

**1. INSERT TWO (2) 3/8" x 16 UNC x 3" (76 MM) LONG GUIDE STUDS INTO THE TWO UPPER MOUNTING HOLES OF THE FLYWHEEL.**

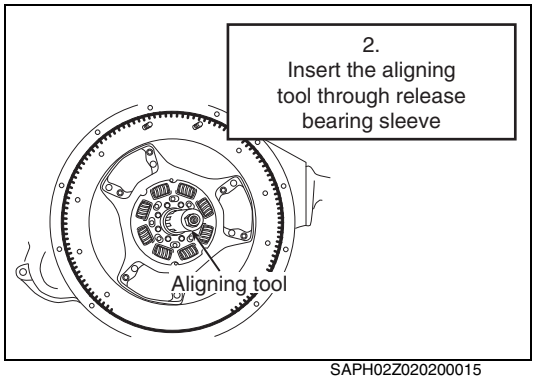

SAPH02Z020200015

**2. INSTALL THE FRONT DISC BY INSERTING THE ALIGNING TOOL THROUGH THE DISC SPLINES AND THEN INTO THE PILOT BEARING.**
**SST:**
**Clutch Aligning Arbor (S0966-21420)**

**NOTICE**
**Make sure the side marked "Flywheel" faces the flywheel.**

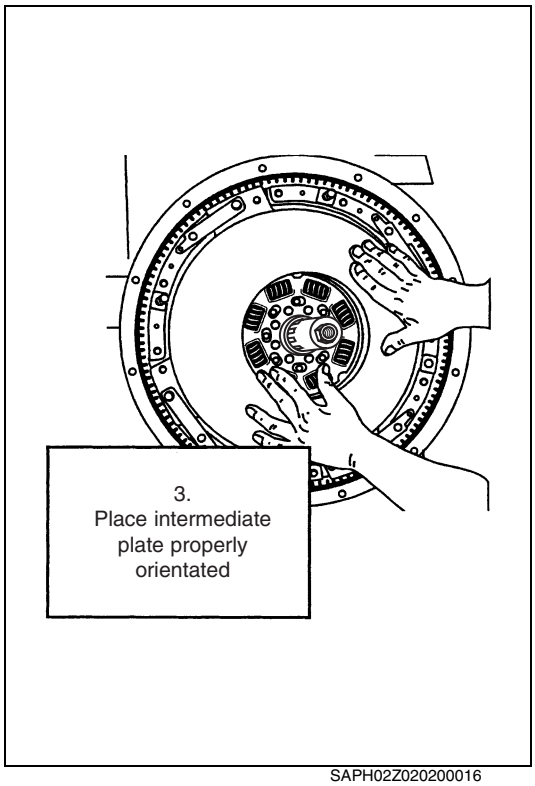

SAPH02Z020200016

**3. INSTALL THE INTERMEDIATE PLATE ASSEMBLY OVER THE TWO (2) GUIDE STUDS AND SLIDE IT FORWARD UNTIL IT TOUCHES THE FLYWHEEL.**

**NOTICE**
**Make sure the side marked "Pressure Plate Side" is facing the pressure plate (the drive straps must face the pressure plate).**

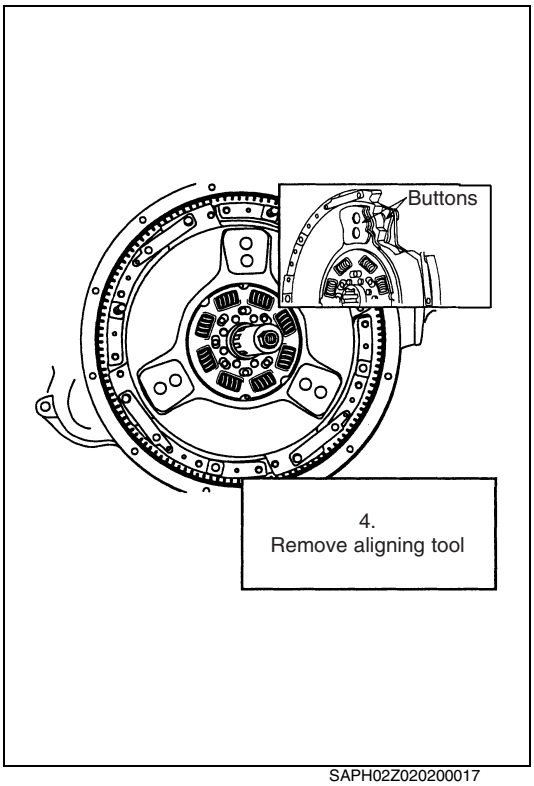


SAPH02Z020200017

**4. REMOVE THE ALIGNING TOOL AND INSTALL IT THROUGH THE SPLINES OF THE REAR DISC, AND INSERT THE ALIGNING TOOL THROUGH THE FRONT DISC AND ALSO THE PILOT BEARING.**

**NOTICE**

**Make sure the side of the disc marked "Pressure Plate Side" is facing the pressure plate. As you complete this step, ensure that the ceramic buttons align with each other as closely as possible. Doing so will aid the function of the positive separator pins (roll pins).**

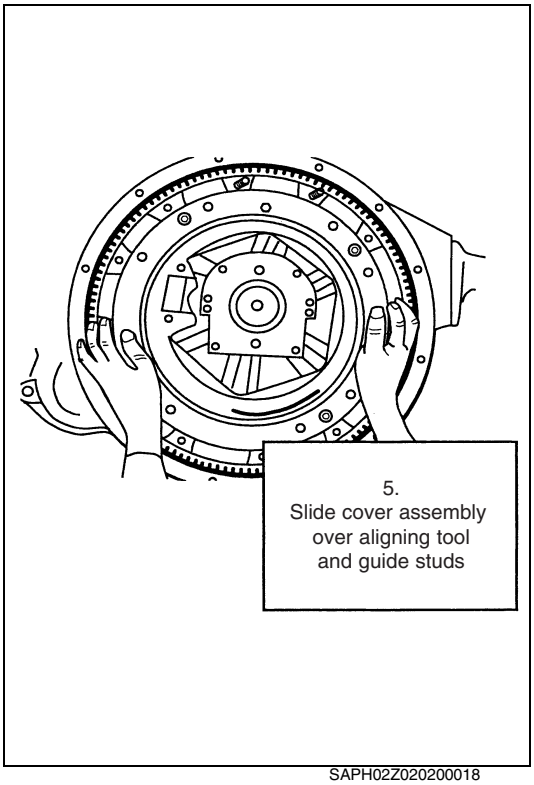


SAPH02Z020200018

**5. WITH THE ALIGNING TOOL STILL IN PLACE, SLIDE THE COVER ASSEMBLY OVER BOTH THE ALIGNING TOOL AND THE TWO (2) GUIDE STUDS UNTIL IT RESTS AGAINST THE INTERMEDIATE PLATE ASSEMBLY.**

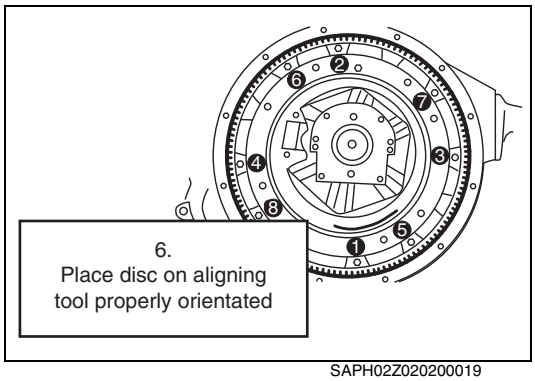


SAPH02Z020200019

**6. INSTALL LOCKWASHER AND SIX (6) 3/8" x 16 UNC MOUNTING BOLTS HAND TIGHTEN.**

(1) Remove the two (2) guide studs and replace with the remaining mounting bolts with lockwasher. Using a torque wrench, progressively tighten the eight (8) mounting bolts using the following criss-cross pattern. Starting at lower left.
**Tightening Torque:**
**50-64 N·m {510-665 kgf·cm, 37-47 lbf·ft}**

**⚠ CAUTION**
**Failure to tighten these bolts in this manner can:**

- **Prevent the clutch cover from "centering" into the pilot area of the flywheel.**
- **Cause permanent damage to the clutch cover (i.e. become cracked or broken).**
- **Cause the clutch assembly to be out-of balance with the flywheel.**

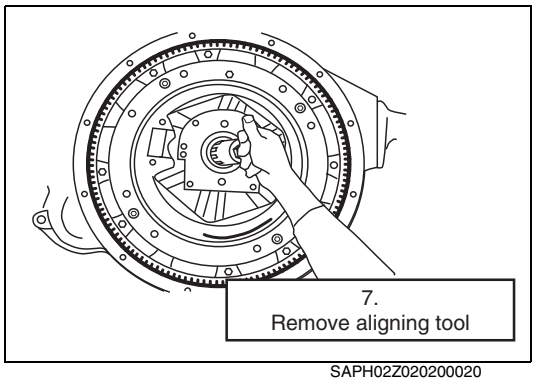


SAPH02Z020200020

**7. REMOVE THE ALIGNING TOOL.**

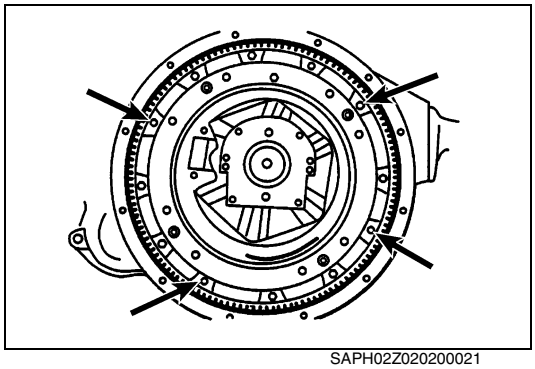

SAPH02Z020200021

**8. USING A 1/4" (6 mm) DIAMETER FLAT NOSE PUNCH, LIGHTLY TAP EACH OF THE FOUR (4) POSITIVE SEPARATOR PINS TOWARD THE FLYWHEEL. PERFORMING THIS STEP WILL VERIFY THAT ALL FOUR (4) PINS ARE FLUSH AGAINST THE FLYWHEEL.**

**⚠ CAUTION**
**Failure to perform this step properly may cause the clutch to drag (clutch does not release). Excessive force can damage the pins and cause a release problem**

**NOTICE**
**The four (4) pins can also be set through the inspection opening of the transmission bell housing if they were not to set prior to transmission installation.**

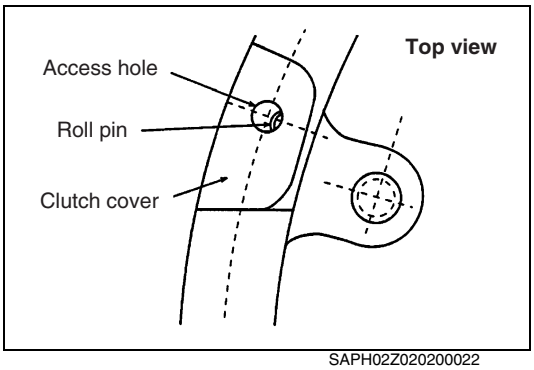


SAPH02Z020200022

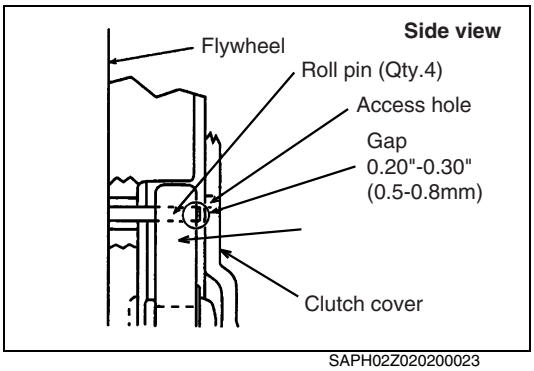


SAPH02Z020200023

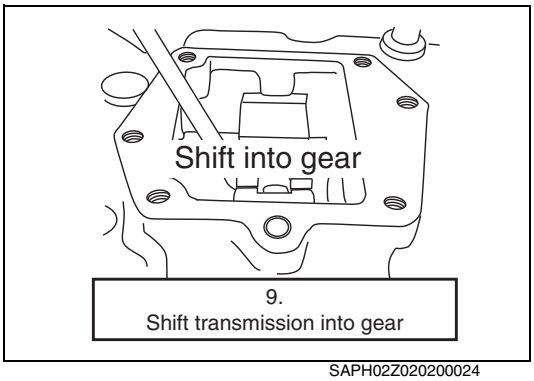


SAPH02Z020200024

**9. SHIFT THE TRANSMISSION INTO GEAR.**

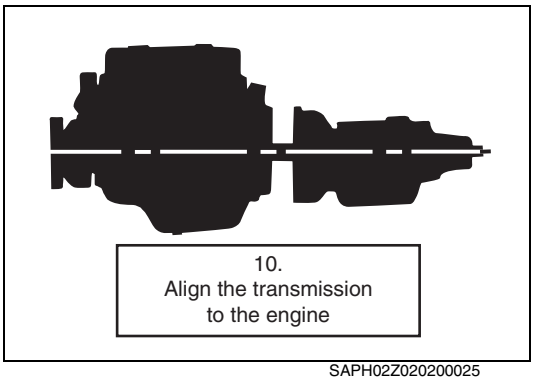


SAPH02Z020200025

**10. POSITION THE TRANSMISSION SO THAT IT IS BOTH SQUARE TO AND ALIGNED WITH THE ENGINE.**

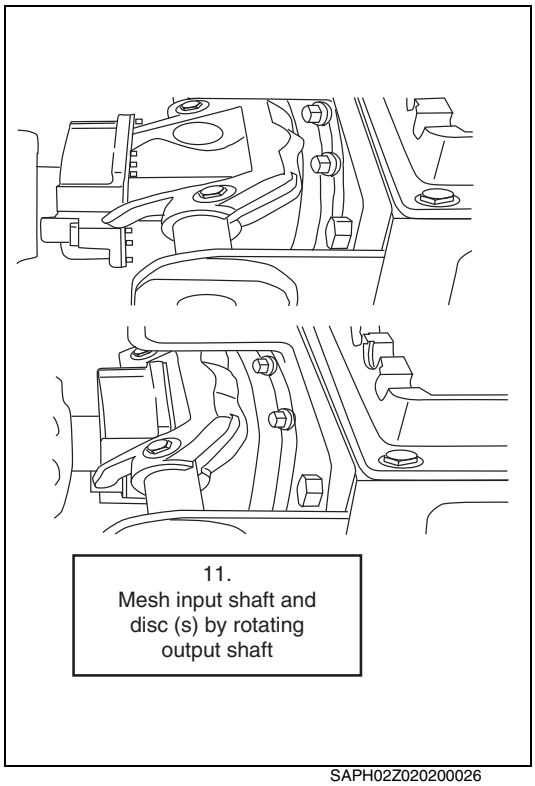

11.
Mesh input shaft and disc (s) by rotating output shaft

SAPH02Z020200026

**11. WHILE MOVING THE TRANSMISSION FORWARD, ROTATE THE OUTPUT SHAFT OF THE TRANSMISSION UNTIL THE SPLINES OF BOTH THE INPUT SHAFT AND THE DISC(S) MESH WITH EACH OTHER. WHILE PERFORMING THIS TASK, YOU MUST ALSO ENSURE THAT THE YOKE FINGERS REMAIN IN THE UP POSITION UNTIL THEY CAN BE ROTATED OVER THE RELEASE BEARING HOUSING INTO THEIR FINAL POSITION.**

**⚠ CAUTION**

- **Do not use the cross-shaft release lever (or a pipe over it) to pull the transmission into its final position.**
- **Do not excessively force the transmission into the clutch assembly or engine housing. If it does not enter freely, investigate the cause of the problem and make any necessary changes.**
- **If the input shaft will not slide into the discs, they may need to be repositioned. Do not let the transmission drop or hang unsupported in the driven discs.**
  **This can cause the discs to become distorted and the clutch will not release.**

**12. INSTALL THE TRANSMISSION MOUNTING BOLTS AND TORQUE TO THE PROPER SPECIFICATION.**
**Tightening Torque:**
**37.5-48.5 N·m {382-494 kgf·cm, 28-35 lbf·ft}**

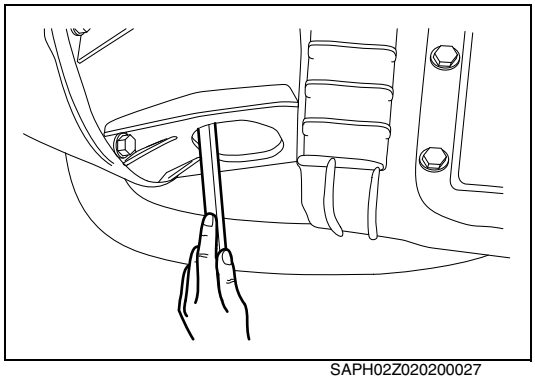

SAPH02Z020200027

## IMPORTANT POINT - ADJUSTMENT

**1. CHECK LOCATION OF THE KWIK-ADJUSTER®**

(1) Remove the cover of inspection hole at the bottom of the clutch housing.

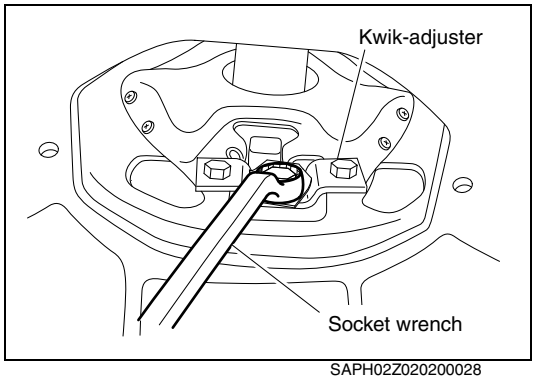


SAPH02Z020200028

(2) If the Kwik-Adjuster exists in approachable position, adjustment can be performed.
If position of the Kwik-Adjuster cannot be identified, perform following procedure.

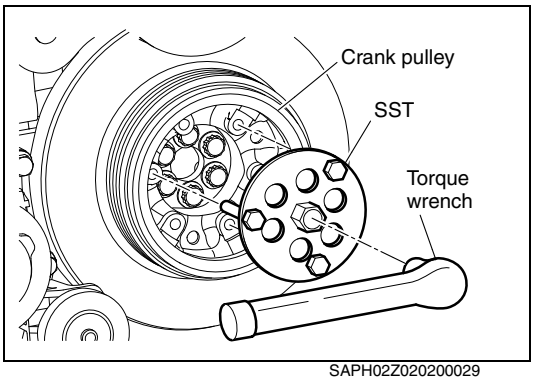

SAPH02Z020200029

**2. ARRANGE THE KWIK-ADJUSTER**

(1) Set SST the crank pulley.
**SST:**
**Cranking Tool (S0940-91200)**

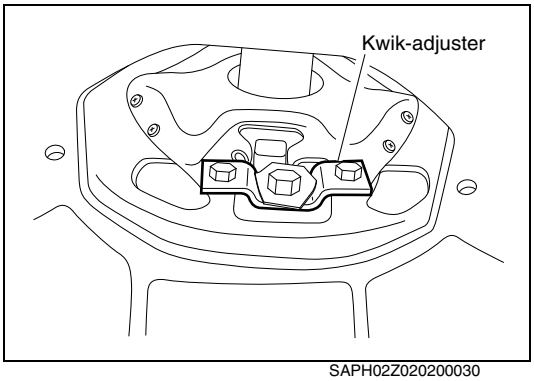

SAPH02Z020200030

(2) Turn the crank pulley till the Kwik-Adjuster matches the inspection hole.

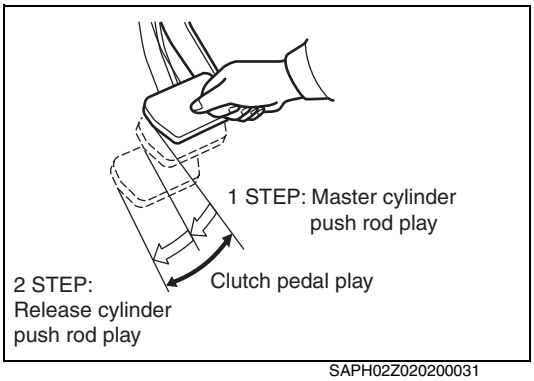

SAPH02Z020200031

**3. ADJUSTING PROCEDURES**

(1) Adjust the release bearing position;

- When the clutch disc is worn (pedal play less than limit)
  **Pedal play limit; 35 mm {1.38 in.}**
- When the clutch disc replaced.

(2) Adjust the free travel by release cylinder push rod only;

- When the clutch disc or control linkage is replaced.

**NOTICE**

**The above adjusting should be made after adjusting the release bearing position.**

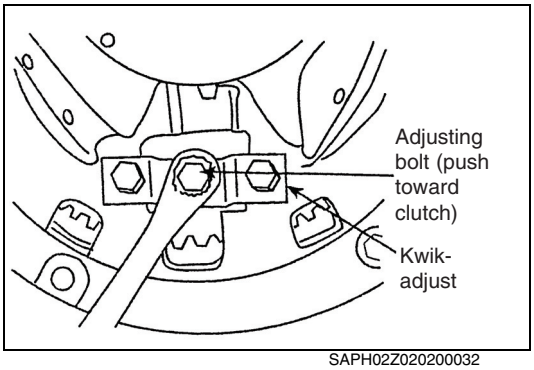

SAPH02Z020200032

(3) Manual Adjust: Kwik-Adjust®

- Depress adjusting bolt and rotate.
  Kwik-Adjust will re-engage at 1/3 of a turn.

**NOTICE**

- **Open-end wrenches are not recommended.**
- **Internal adjustments are performed with pedal down (clutch released).**

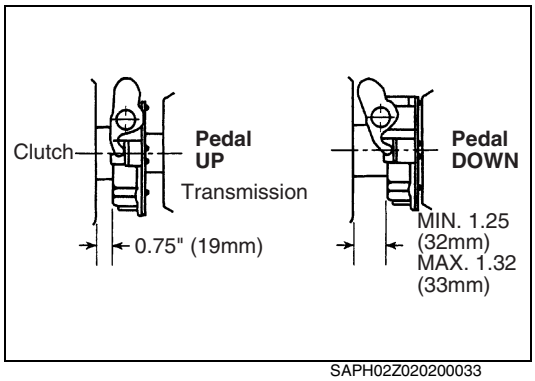


SAPH02Z020200033

**4. ADJUST THE RELEASE BEARING POSITION**

(1) Set 0.75" (19 mm) dimension: With pedal down, turn adjusting ring to obtain approximately 0.75" (19 mm). Turning the adjusting ring clockwise moves the release bearing toward the transmission. Turning the adjusting ring counterclockwise moves the release bearing toward the engine.

(2) Check release travel dimensions with release yoke rotated toward release bearing, eliminating excess play in system. Having set this, depress pedal down fully releasing clutch and check release travel to settings shown.

**NOTICE**

**It may be necessary to reduce the 0.75" (19 mm) settings to be able to achieve 0.500"-0.562" (13-14 mm) travel on some models of transmissions.**

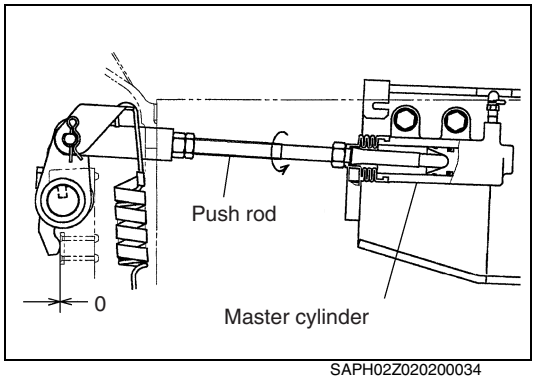


SAPH02Z020200034

**5. ADJUST THE FREE TRAVEL**

(1) Remove the return spring.

(2) Loosen the lock nut and turn the push rod counterclockwise until the release bearing contacts the release lever plate or release lever.

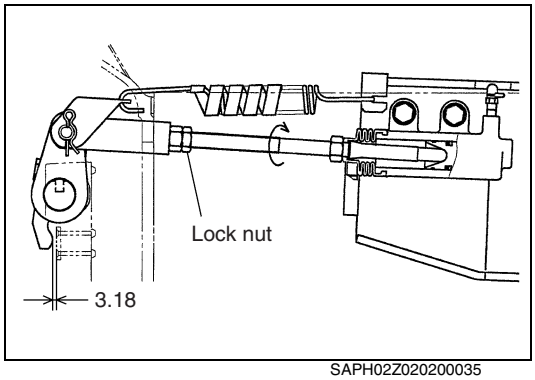


SAPH02Z020200035

(3) Turn the push rod clockwise about 3 1/3 turns.

**Standard: Clearance between release bearing and release yoke: 3.18 mm {0.125 in.}**

(4) Tighten the lock nut.

# CLUTCH ASSEMBLY (EATON SOLO1402)

## DATA AND SPECIFICATIONS

EN02Z0202I200002

**CLUTCH FACING** **Unit: mm {in.}**

| | |
|---|---|
| **Material** | **Sintered metal (Ceramic metal)** |
| **Type** | **Dry two plate with damper spring** |
| **Inside diameter** | **222 {8.8}** |
| **Outside diameter** | **350 {13.8}** |
| **Thickness** | **11.5 {0.45} Adjustment-Free** |

## COMPONENT LOCATOR

EN02Z0202D100002

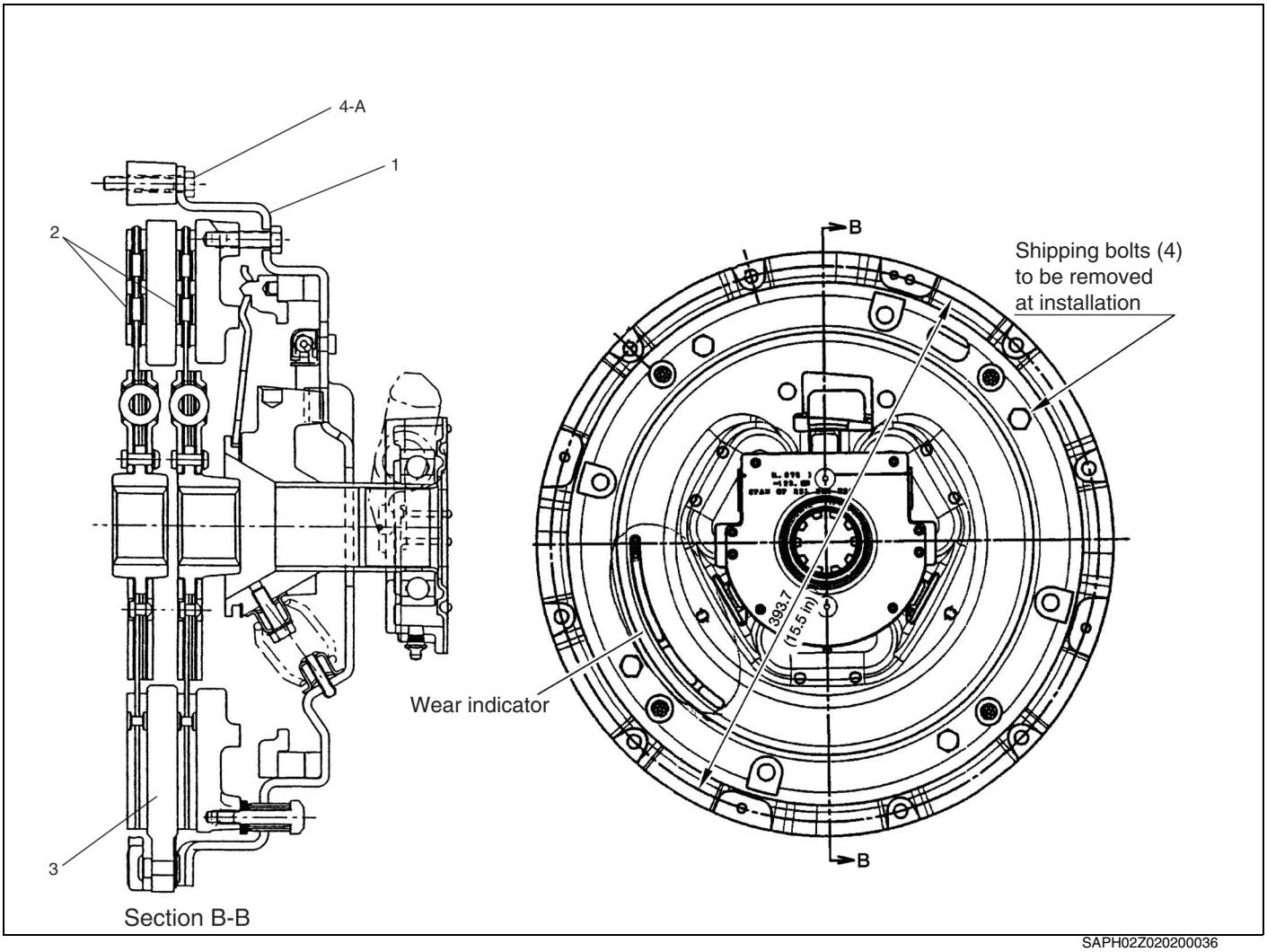


SAPH02Z020200036

| | | | |
|---|---|---|---|
| **1** | **Clutch cover** | **3** | **Intermediate plate** |
| **2** | **Clutch disc** | **4** | **Bolt** |

**Tightening torque** **Unit: N·m {kgf·cm, lbf·ft}**

| | | | |
|---|---|---|---|
| **A** | **37.5-48.5 {383-494, 28-35}** | | |

# OVERHAUL

EN02Z0202H200002

## IMPORTANT POINT - DISMOUNTING

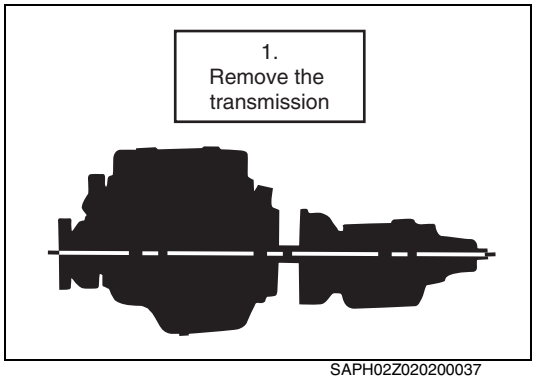

SAPH02Z020200037

**1. REMOVE THE TRANSMISSION, SUPPORTING ITS WEIGHT TO PREVENT DAMAGE TO THE BEARING AND DISCS.**

**NOTICE**

**If a SOLO Clutch is to be removed and reinstalled on the flywheel, four (4) shipping bolts must be installed prior to unbolting the clutch (3/8" x 16 UNC x 1-1/4").**

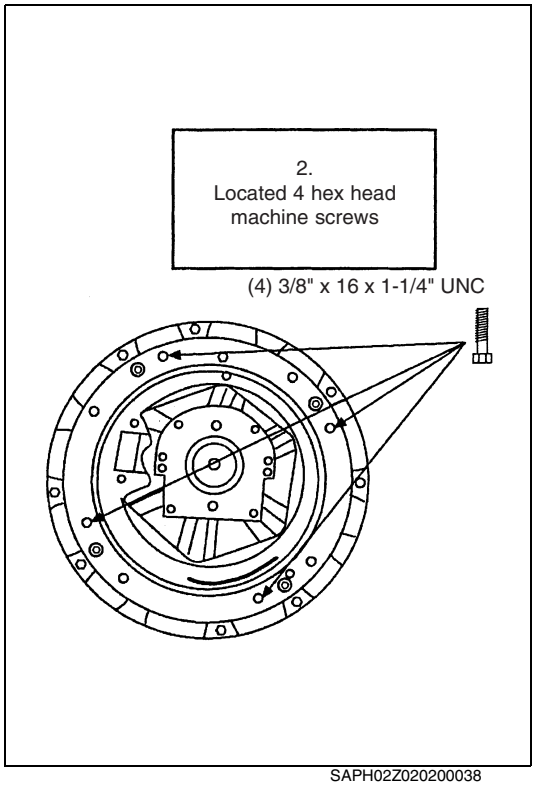

SAPH02Z020200038

**2. LOCATE FOUR (4) 3/8" x 16 x 1 - 1/4" UNC, HEX HEAD MACHINE SCREWS. INSTALL THEM IN THE 4 COVER HOLES, TURNING THEM ONE COMPLETE TURN AFTER THEY CONTACT THE COVER.**

**3. REMOVE THE CLUTCH FROM THE FLYWHEEL.**

**NOTICE**

**Mark the proper position of the discs and intermediate plate adapter ring (for reinstallation).**

## IMPORTANT POINT - INSPECTION AND REPLACEMENT

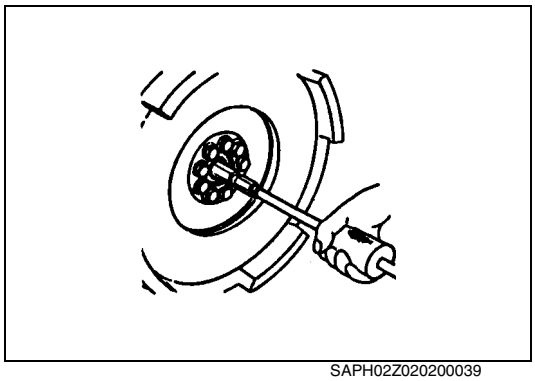
SAPH02Z020200039

**1. REPLACE THE PILOT BEARING.**

(1) Remove the pilot bearing.

**SST:**

**Pilot Bearing Puller (S0965-01970)**

**Sliding Hammer (S0942-01442)**

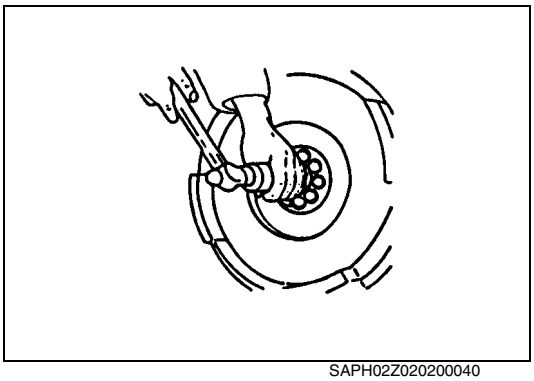

SAPH02Z020200040

(2) Using a suitable tapping rod, install the pilot bearing.

**NOTICE**

**After installing the pilot bearing, ensure that it rotates smoothly.**

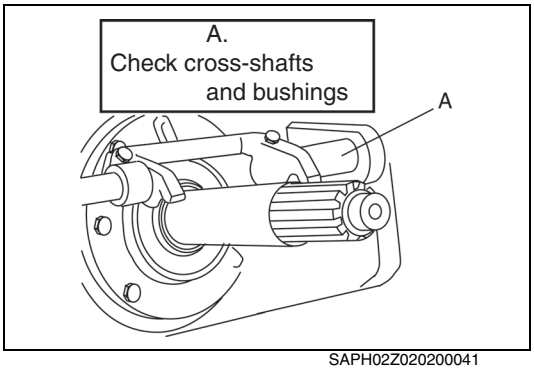


SAPH02Z020200041

**2. CHECK THE FOLLOWING ITEMS FOR WEAR REPLACE ANY WORN COMPONENTS:**

(1) Cross-shafts and bushings

**NOTICE**

**Excessive wear at these points can cause a side loading condition. Also, inspect the remaining pivot points of the linkage for excessive wear.**

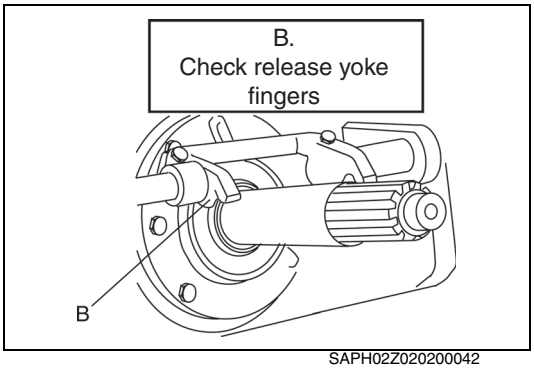


SAPH02Z020200042

(2) Release yoke fingers

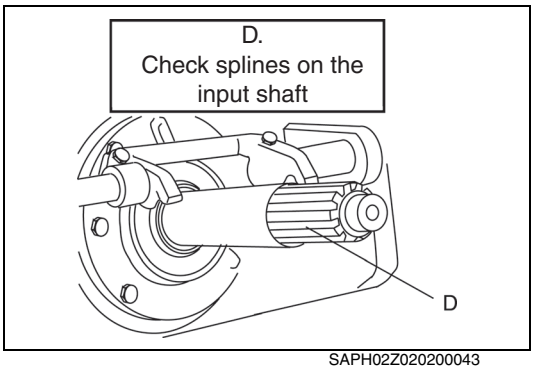


SAPH02Z020200043

(3) Splines on the input shaft

**NOTICE**

**Any wear on the splines will prevent the newly installed driven discs from sliding freely, thus causing poor release (clutch drag). Select a disc out of the new installation and slide it full length on the transmission splines. This will detect a twisted input shaft. Replace input shaft if disc does not freely slide.**

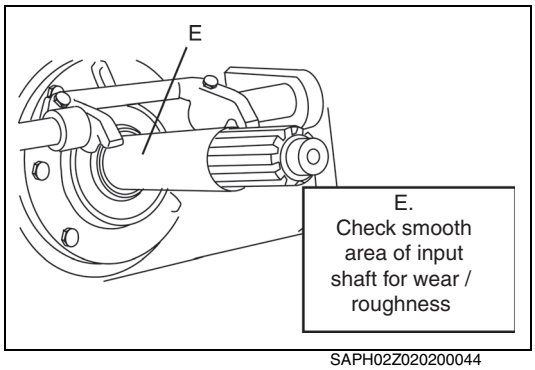

SAPH02Z020200044

(4) Smooth area of input shaft
(5) Mating surfaces

**NOTICE**
**Inspect the mating surfaces of both the transmission bell housing and the flywheel housing. Any appreciable wear on either housing will cause misalignment. Most wear will occur between the 3 and 8 o'clock positions.**
**Replace housings if worn.**

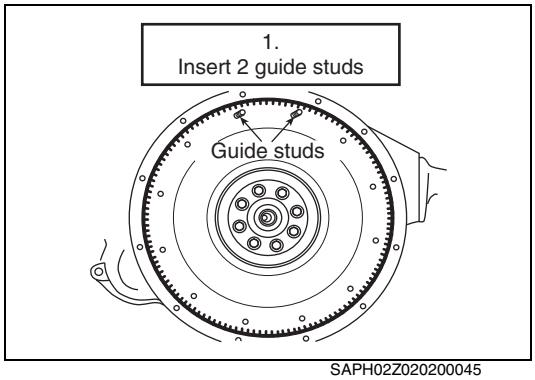

SAPH02Z020200045

## IMPORTANT POINT - MOUNTING

**1. INSERT TWO (2) 3/8" x 16 UNC x 3" (76 MM) LONG GUIDE STUDS INTO THE TWO UPPER MOUNTING HOLES OF THE FLYWHEEL.**

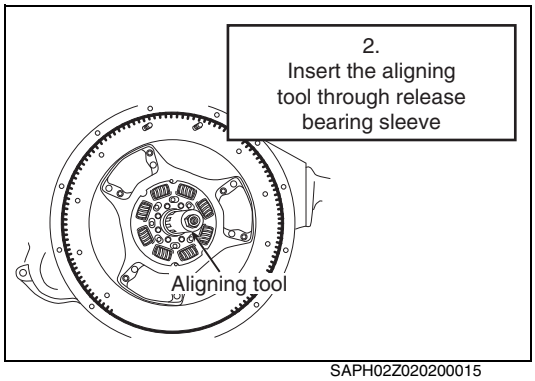

SAPH02Z020200015

**2. INSTALL THE FRONT DISC BY INSERTING THE ALIGNING TOOL THROUGH THE DISC SPLINES AND THEN INTO THE PILOT BEARING.**
**SST:**
**Clutch Aligning Arbor (S0966-21420)**

**NOTICE**
**Make sure the side marked "Flywheel" faces the flywheel.**

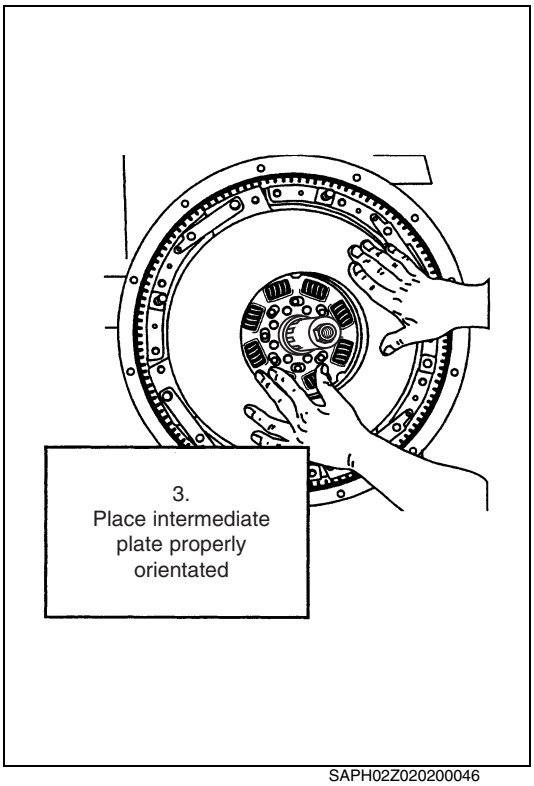


SAPH02Z020200046

**3. INSTALL THE INTERMEDIATE PLATE ASSEMBLY OVER THE TWO (2) GUIDE STUDS AND SLIDE IT FORWARD UNTIL IT TOUCHES THE FLYWHEEL.**

**NOTICE**

**Make sure the side marked "Pressure Plate Side" is facing the pressure plate (the drive straps must face the pressure plate).**

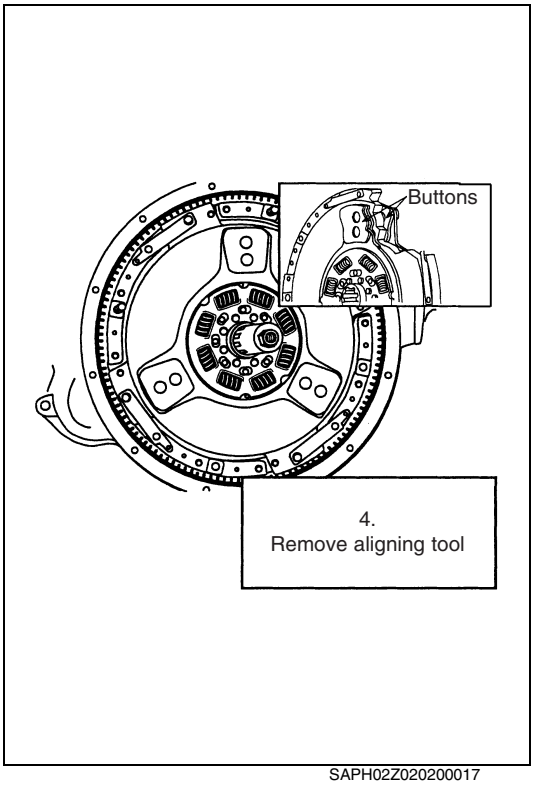


SAPH02Z020200017

**4. REMOVE THE ALIGNING TOOL AND INSTALL IT THROUGH THE SPLINES OF THE REAR DISC, AND INSERT THE ALIGNING TOOL THROUGH THE FRONT DISC AND ALSO THE PILOT BEARING.**

**NOTICE**

**Make sure the side of the disc marked "Pressure Plate Side" is facing the pressure plate. As you complete this step, ensure that the ceramic buttons align with each other as closely as possible. Doing so will aid the function of the positive separator pins (roll pins).**

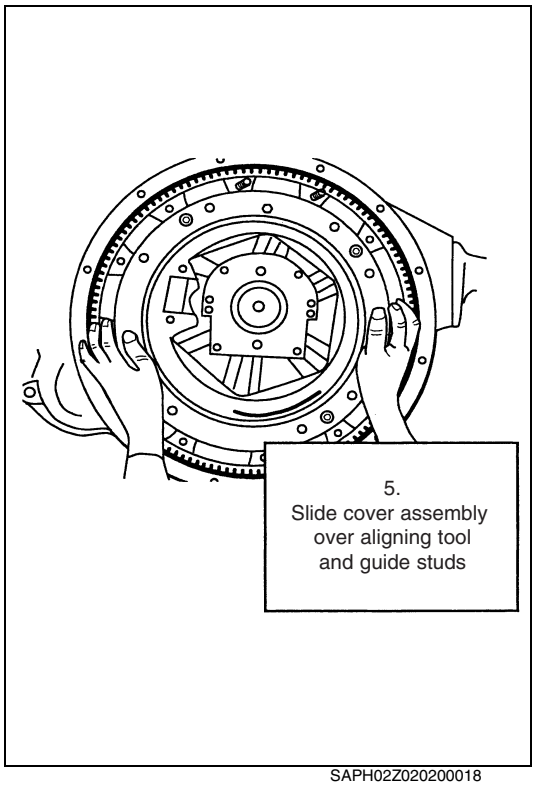


SAPH02Z020200018

**5. WITH THE ALIGNING TOOL STILL IN PLACE, SLIDE THE COVER ASSEMBLY OVER BOTH THE ALIGNING TOOL AND THE TWO (2) GUIDE STUDS UNTIL IT RESTS AGAINST THE INTERMEDIATE PLATE ASSEMBLY.**

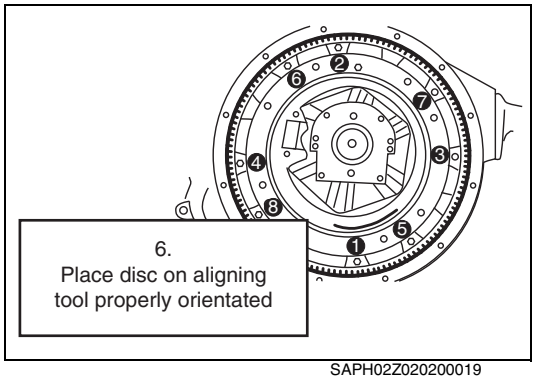


SAPH02Z020200019

**6. INSTALL LOCKWASHER AND SIX (6) 3/8" x 16 UNC MOUNTING BOLTS HAND TIGHTEN.**

(1) Remove the two (2) guide studs and replace with the remaining mounting bolts with lockwasher. Using a torque wrench, progressively tighten the eight (8) mounting bolts using the following criss-cross pattern. Starting at lower left.
**Tightening Torque:**
**50-64 N·m {510-665 kgf·cm, 37-47 lbf·ft}**

**⚠ CAUTION**
**Failure to tighten these bolts in this manner can:**

- **Prevent the clutch cover from "centering" into the pilot area of the flywheel.**
- **Cause permanent damage to the clutch cover (i.e. become cracked or broken).**
- **Cause the clutch assembly to be out-of balance with the flywheel.**

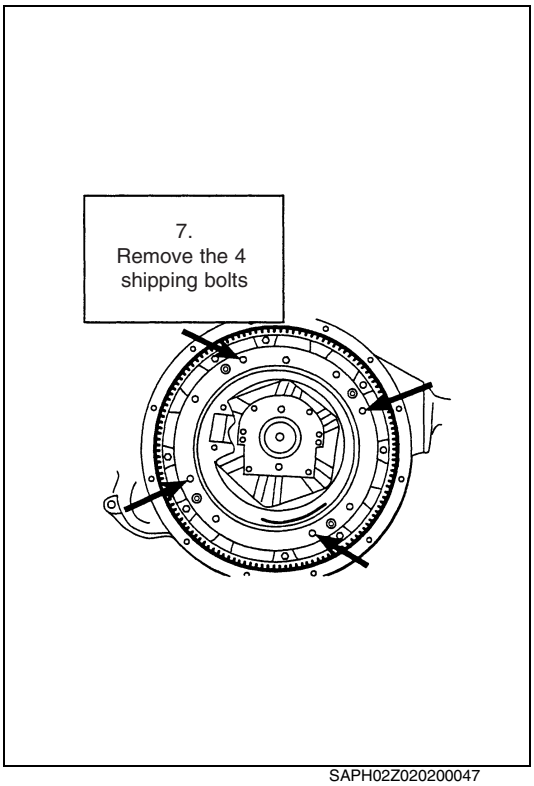


SAPH02Z020200047

**7. REMOVE THE FOUR (4) GOLD COLORED SHIPPING BOLTS IN A CRISS-CROSS PATTERN.**

**NOTICE**

**Save these four (4) bolts for future use in case you need to remove, then reinstall the SOLO Clutch.**

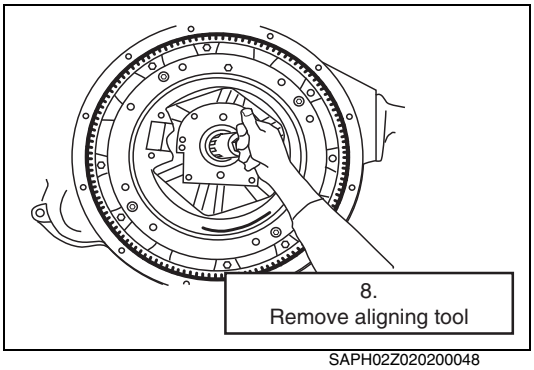


SAPH02Z020200048

**8. REMOVE THE ALIGNING TOOL.**

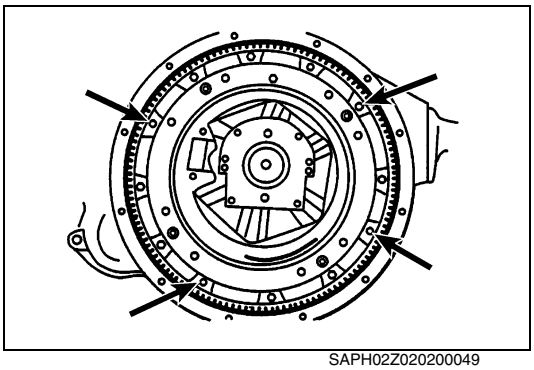

SAPH02Z020200049

**9. USING A 1/4" (6 mm) DIAMETER FLAT NOSE PUNCH, LIGHTLY TAP EACH OF THE FOUR (4) POSITIVE SEPARATOR PINS TOWARD THE FLYWHEEL. PERFORMING THIS STEP WILL VERIFY THAT ALL FOUR (4) PINS ARE FLUSH AGAINST THE FLYWHEEL.**

**⚠ CAUTION**

**Failure to perform this step properly may cause the clutch to drag (clutch does not release). Excessive force can damage the pins and cause a release problem**

**NOTICE**

**The four (4) pins can also be set through the inspection opening of the transmission bell housing if they were not to set prior to transmission installation.**

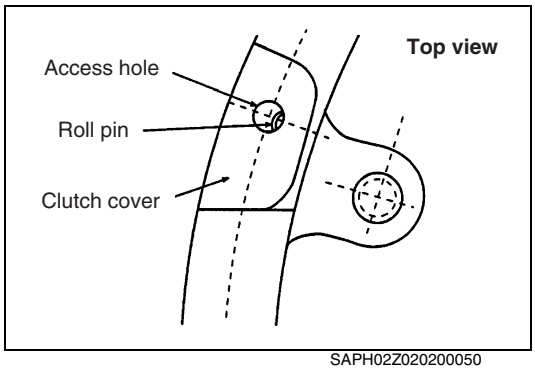


SAPH02Z020200050

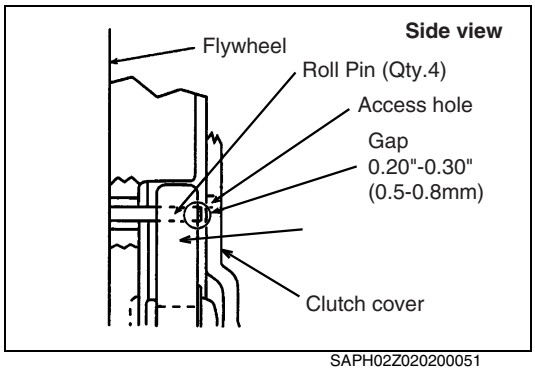


SAPH02Z020200051

**10. SHIFT THE TRANSMISSION INTO GEAR.**

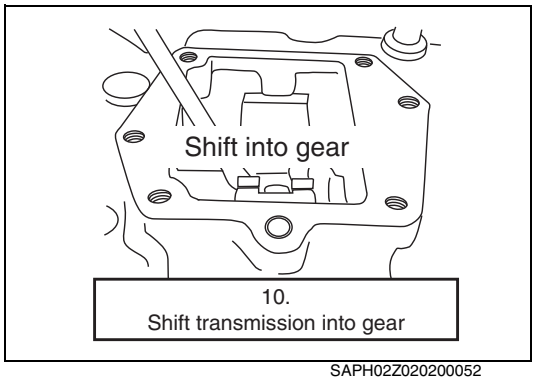


SAPH02Z020200052

**11. POSITION THE TRANSMISSION SO THAT IT IS BOTH SQUARE TO AND ALIGNED WITH THE ENGINE.**

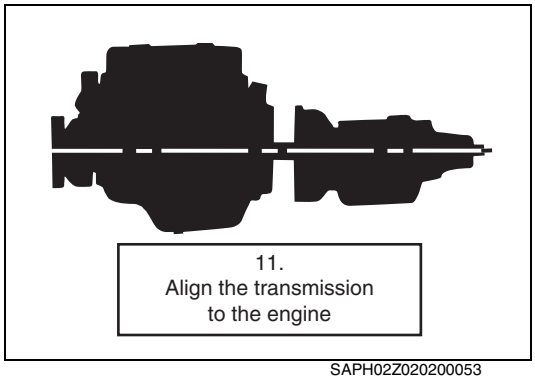


SAPH02Z020200053

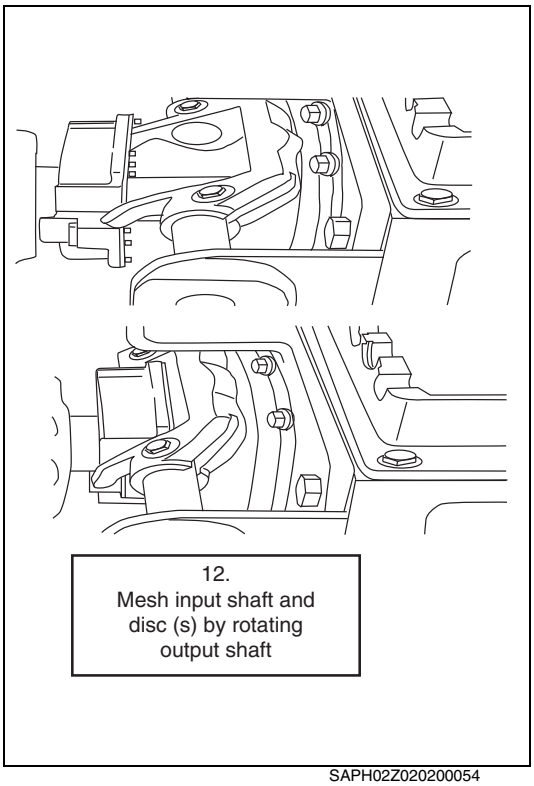

12.
Mesh input shaft and disc (s) by rotating output shaft

SAPH02Z020200054

**12. WHILE MOVING THE TRANSMISSION FORWARD, ROTATE THE OUTPUT SHAFT OF THE TRANSMISSION UNTIL THE SPLINES OF BOTH THE INPUT SHAFT AND THE DISC(S) MESH WITH EACH OTHER. WHILE PERFORMING THIS TASK, YOU MUST ALSO ENSURE THAT THE YOKE FINGERS REMAIN IN THE UP POSITION UNTIL THEY CAN BE ROTATED OVER THE RELEASE BEARING HOUSING INTO THEIR FINAL POSITION.**

**⚠ CAUTION**

- **Do not use the cross-shaft release lever (or a pipe over it) to pull the transmission into its final position. Doing so may release the clutch and "overstroke" the release bearing. The SOLO will incorrectly "set" the release bearing position too close to the transmission and cause the wear indication tab to move to 1/3-1/2 the distance towards the "REPLACE" position.**
- **Do not excessively force the transmission into the clutch assembly or engine housing. If it does not enter freely, investigate the cause of the problem and make any necessary changes.**
- **If the input shaft will not slide into the discs, they may need to be repositioned. If the clutch is to be unbolted from the flywheel, reinstall the shipping bolts and tighten one turn past contact with the clutch. Now the installation shaft can be installed to reposition the discs and the clutch bolts re-torqued. Remove the shipping bolts to clamp the discs.**
- **Do not let the transmission drop or hang unsupported in the driven discs.**
  **This can cause the discs to become distorted and the clutch will not release.**

**13. INSTALL THE TRANSMISSION MOUNTING BOLTS AND TORQUE TO THE PROPER SPECIFICATION.**
**Tightening Torque:**
**37.5-48.5 N·m {382-494 kgf·cm, 28-35 lbf·ft}**

## IMPORTANT POINT-SET-UP

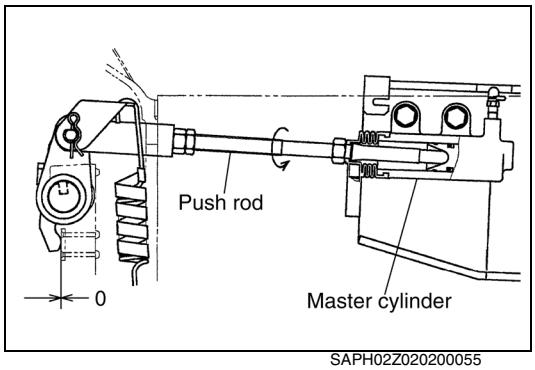

SAPH02Z020200055

**1. ADJUST LINKAGE**

(1) Adjust the clutch linkage until the yoke fingers contact the release bearing (zero free-play in the cab).

(2) Loosen the lock nut and turn the push rod counterclockwise until the release bearing contacts the release lever plate or release lever.

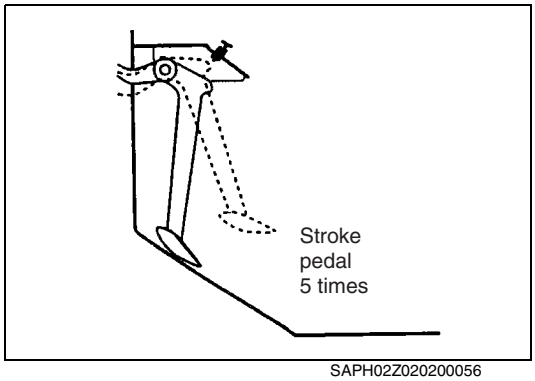

SAPH02Z020200056

(3) Fully press the pedal up to 5 times to move the release bearing slightly closer to the transmission and gain free-play in the cab.

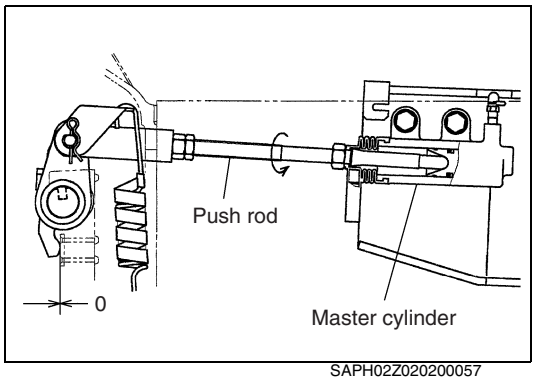

SAPH02Z020200057

**2. ADJUST THE FREE TRAVEL**

(1) Turn the push rod counterclockwise until the release bearing contacts the release lever plate or release lever.

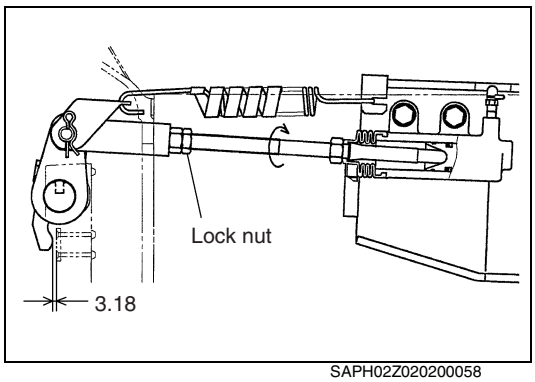

SAPH02Z020200058

(2) Turn the push rod clockwise about 3 1/3 turns.
**Standard: Clearance between release bearing and release yoke: 3.18 mm {0.125 in.}**

(3) Tighten the lock nut.

## IMPORTANT POINT-CHECK WEAR INDICATOR

**1. REMOVE THE COVER OF INSPECTION HOLE AT THE BOTTOM OF THE CLUTCH HOUSING.**

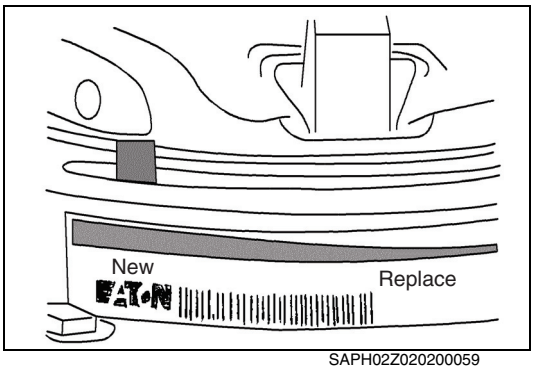

SAPH02Z020200059

**2. CHECK WEAR INDICATOR**

- Reflects clutch wear and indicates when it is time to replace clutch.
- When replacing clutch, should change clutch disc together with clutch cover.

# INSPECTION AND REPAIR

EN02Z0202H300001

**EATON SAS1402 and SOLO1402** **Unit: mm {in.}**

| Inspection item | Standard | Limit | Remedy | Inspection procedure |
|---|---|---|---|---|
| Clutch facing thickness | 11.43 {0.45} | 8.26 {0.33} | Replace disc assembly. | Measure 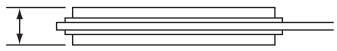 |
| Clutch disc misalignment | 0-0.38 {0-0.0149} | 0.38 {0.0149} | Replace. | Measure 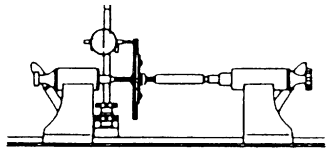 |
| Oily facings, Loose rivets, Broken or loose damper springs | — | — | Replace disc assembly, if necessary. | Visual check |
| Clearance between clutch disc hub and transmission input shaft spline | 0.05-0.15 {0.0020-0.0059} | 0.5 {0.020} | Replace the clutch disc or the transmission input shaft. | Measure 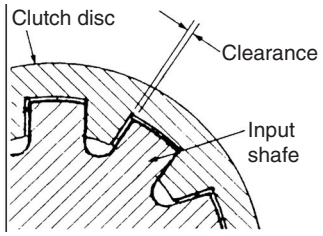  |
| Pressure plate misalignment | 0-0.102 {0-0.040} | 0.76 {0.029} | Replace the clutch cover assembly | Measure 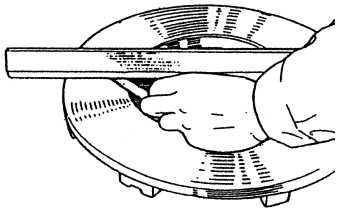 |
| Pressure plate friction surface scoring or heat cracking | — | — | Replace the clutch cover assembly. NOTICE Regrinding of the pressure plate is not possible. | Visual check |
| Flywheel misalignment | 0.05 {0.0020} or less | 1.0 {0.039} | Replace. | Measure 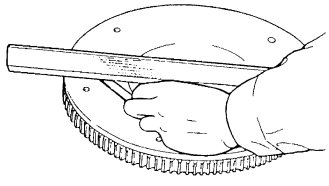 |

| Inspection item | Standard | Limit | Remedy | Inspection procedure |
|---|---|---|---|---|
| **Flywheel friction surface scoring or heat cracking** | **—** | **Grind limit 1.0 {0.039} Deflection limit 0.04 {0.00157}** | **Regrind the friction surface or replace, if necessary.** **NOTICE** **Do not grind the flywheel over the limit.** | **Visual check** |
| **Flywheel misalignment** | **—** | **0.15 {0.0059}** | **Regrind the friction surface or replace.** | **Measure** 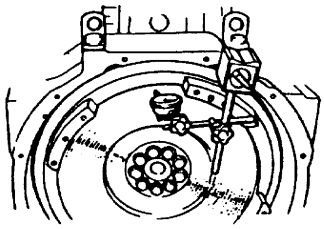 |
| **Pilot bearing improper rotation** | **—** | **—** | **Replace, if necessary.** | **Visual check** 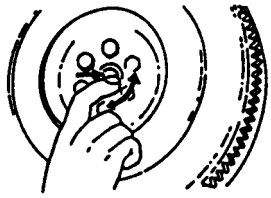 |

## LUBRICATION (EATON SAS1402 and SOLO1402)

**1. RELEASE BEARING**

(1) The cast iron bearing housing will be equipped with either a standard grease fitting or a lube tube extension. If a lube tube is not present, it is necessary to remove the inspection cover to gain access to the grease fitting. Apply grease until it purges from the rear of the housing.

**2. RELEASE BEARING WEAR PADS**

(1) Where the release fork contacts the bearing housing; there are small hardened steel pads. Apply a small amount of grease to the wear pads where the clutch release fork contacts.

**3. CROSS-SHAFT BUSHINGS**

(1) Lubricate both the left and the right cross-shaft bushings.

**4. PILOT BEARING**

(1) The pilot bearing inside the flywheel is a sealed for life bearing and requires no lubrication.

## RECOMMENDED LUBRICATION

Use a lithium soap base E.P. (Extreme Pressure) grease with a minimum of +325 degree F operating range. It must meet the N.L.G.I.'s Grade 2 or 3 specs.

**⚠ CAUTION**

**Incorrect grease and improper lube procedures will cause bearing failures, bushing wearout, yoke tip and bearing wear pad wear.**

| Recommended Lubrication | | | |
|---|---|---|---|
| **Supplier** | **Product** | **Supplier** | **Product** |
| **American Oil Co.** | **Amoco Uthium-M.P. Grease** | **Texaco** | **Multifak #2** |
| **City Service Co.** | **Citgo Premium Lithium Grease #2** | **Shell Oil Co.** | **Retinax A** |
| **Fiske Refining Co.** | **Lubriplate 630-2** | **Shell Oil Co.** | **Aivania #2** |
| **Keystone Lubricating Co.** | **#81 Ught** | ***Chevron Oil Co.** | **S.R.I. 1~** |
| **Mobil** | **Mobilgrease M.P.** | ***Texaco** | **Premium RB** |
| **Humble Oil Co.** | **Udok 2** | ***Exxon** | **Unirex N3** |
| **Atlantic Richfield Co.** | **Arco M.P.** | | |
| *** Approved for vendor prepack, other greases listed are for service only.** | | | |

# CLUTCH CONTROL

CL03-001

**CLUTCH CONTROL UNIT ..... CL03-2**
DESCRIPTION .....CL03-2
INSPECTION AND ADJUSTMENT .....CL03-3

**CLUTCH PEDAL AND RELEASE UNIT ... CL03-6**
COMPONENT LOCATOR.....CL03-6
OVERHAUL .....CL03-7
INSPECTION AND REPAIR .....CL03-9

**CLUTCH MASTER CYLINDER ..... CL03-10**
COMPONENT LOCATOR.....CL03-10
OVERHAUL .....CL03-11
INSPECTION AND REPAIR .....CL03-11

# CLUTCH CONTROL UNIT

## DESCRIPTION

EN02Z0203C100001

### CLUTCH RELEASE UNIT

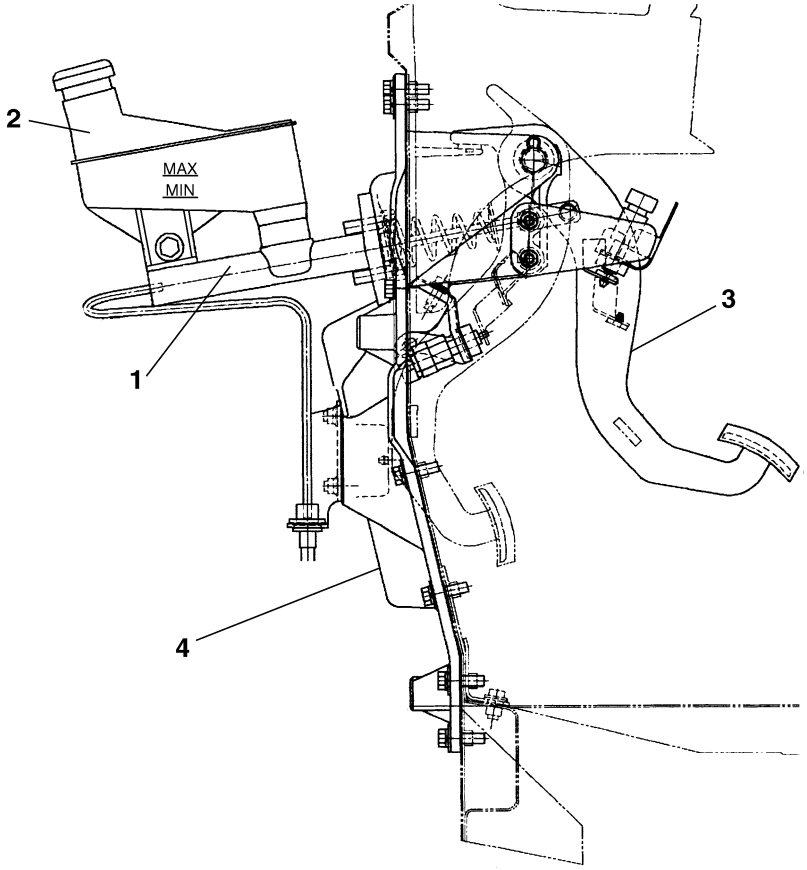


SHTS02Z020300001

| | | | |
|---|---|---|---|
| 1 | Clutch master cylinder | 3 | Clutch pedal |
| 2 | Reservoir tank | 4 | Pedal bracket |

# INSPECTION AND ADJUSTMENT

EN02Z0203H300001

## AIR BLEEDING

**1. BLEED THE AIR FROM HYDRAULIC LINE.**

**NOTICE**

- **Do not mix the clutch fluid with different types or brands.**
- **Be careful not to spill clutch fluid from the reservoir tank or from the air bleeder during air bleeding. Clutch fluid can damage the paint finish on the body or floor.**
- **There are two methods of bleeding, gravity bleeding and manual air bleeding.**

**2. GRAVITY BLEEDING**

(1) Connect a funnel to a vinyl tube.
(2) Connect the other end of the vinyl tube to the bleeder screw.
(3) Hold the funnel about 1.5 m {4.92 ft} higher than the reservoir tank.
(4) Loosen the bleeder screw and pour the clutch fluid into the funnel.
(5) Observe the flow of clutch fluid into the reservoir tank.
(6) When the air bubbles cease, close the bleeder screw.
(7) Check the fluid level. If necessary, add or remove clutch fluid in order to match the "MAX" level.

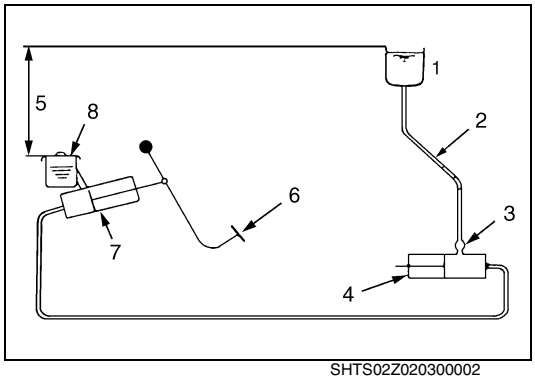


SHTS02Z020300002

| |
|---|
| 1. Funnel filled with clutch fluid |
| 2. Vinyl tube (inside diameter: 6 mm) |
| 3. Bleeder |
| 4. Slave cylinder |
| 5. About 1.5 m {4.92 ft} |
| 6. Clutch pedal |
| 7. Master cylinder |
| 8. Reservoir tank |

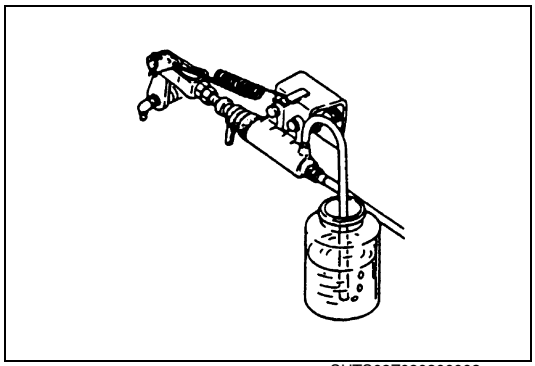

SHTS02Z020300003

**3. MANUAL BLEEDING**

(1) Fill the reservoir with clutch fluid.
(2) Connect the bleeder tube to the slave cylinder bleeder screw. Place the other end of tube in a container half-filled with clutch fluid.

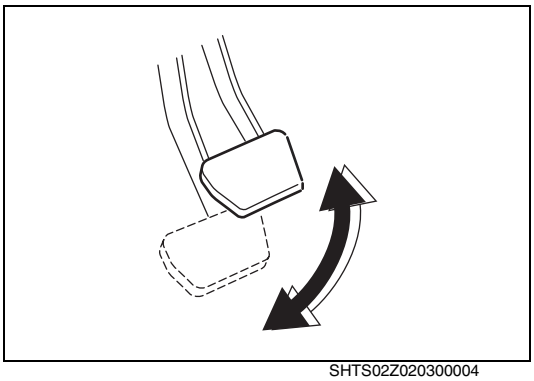

SHTS02Z020300004

(3) Slowly pump the clutch pedal several times. While pressing on the pedal, loosen the bleeder screw. Repeat this procedure until there are no more air bubbles in the fluid.

**NOTICE**

- **Do not return the clutch pedal before closing the bleeder screw.**
- **Keep the reservoir filled with clutch fluid.**
- **Re-bleeding will be necessary if the reservoir is emptied during bleeding operation.**

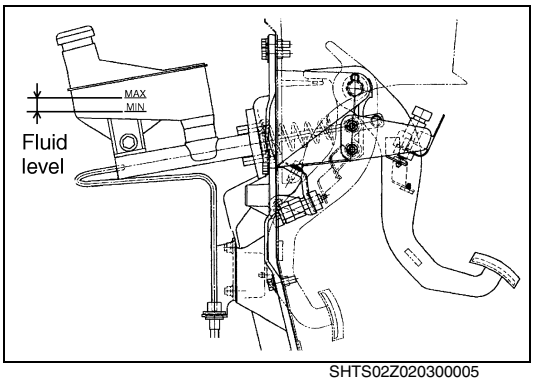


SHTS02Z020300005

(4) Check the fluid level. If necessary, add or remove clutch fluid in order to match the "MAX" level.

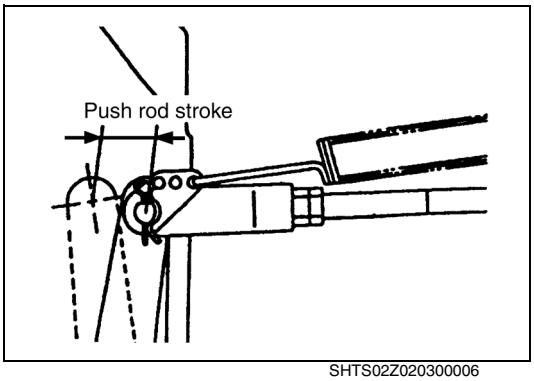


SHTS02Z020300006

**4. AFTER BLEEDING, MAKE SURE THE PUSH ROD STROKE IS AS SPECIFIED.**

(1) Depress the clutch pedal fully and measure the push rod stroke. If the stroke is less than standard, re-bleed the hydraulic system.

**Standard:**

| Model | Standard |
|---|---|
| **HINO 238 (NE), 258 (NE, NJ), 268 (NE, NF, NV), 338 (NF, NV), 358 (NH)** | **More than 22.5-24.5 mm {0.886-0.964 in.}** |

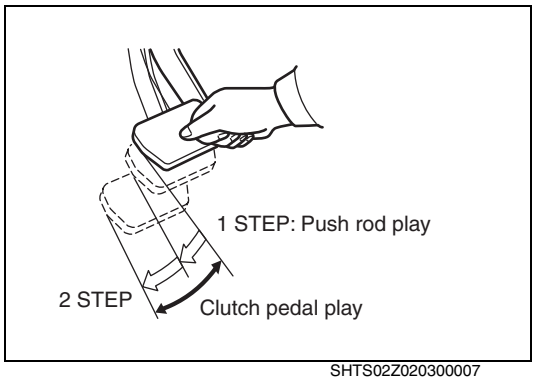

SHTS02Z020300007

## CHECK AND ADJUSTMENT

**1. CHECK AND ADJUST THE CLUTCH PEDAL PLAY.**

(1) Check the push rod play.

a. If necessary, adjust the push rod play.

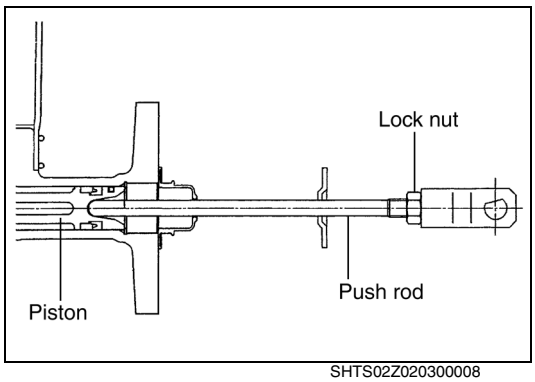

SHTS02Z020300008

b. Loosen the lock nut and turn the master cylinder push rod until the push rod play is correct.
**Standard:**
**Clearance between push rod and piston:**
**0.5 mm {0.0197 in.}**
**Push rod play at pedal top: 2-4 mm {0.079-0.157 in.}**

c. Tighten the lock nut.

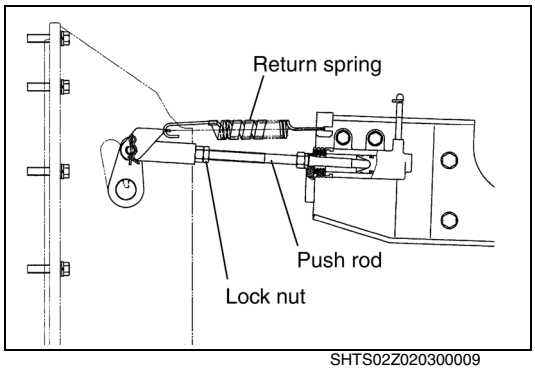

SHTS02Z020300009

(2) Check the clutch pedal play.

a. Push the pedal until the beginning of clutch resistance is felt.

**Assembly Standard:**

| Model | Standard | Limit |
|---|---|---|
| **HINO 238 (NE), 258 (NE, NJ), 268 (NE, NJ, NV), 338 (NF, NV), 358 (NH)** | **44-59 mm {1.73-2.32 in.}** | **35 mm {1.38 in.}** |

**NOTICE**
**For adjustment of clutch, refer to the chapter "CLUTCH MAIN UNIT".**

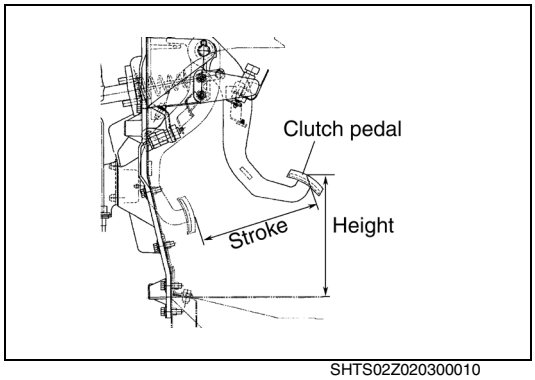

SHTS02Z020300010

**2. CHECK THE CLUTCH PEDAL HEIGHT AND STROKE.**

| | Assembly Standard: |
|---|---|
| **Pedal Height** | **205-215 mm {8.07-8.46 in.}** |
| **Pedal Stroke** | **205-215 mm {8.07-8.46 in.}** |

# CLUTCH PEDAL AND RELEASE UNIT

## COMPONENT LOCATOR

EN02Z0203D100001

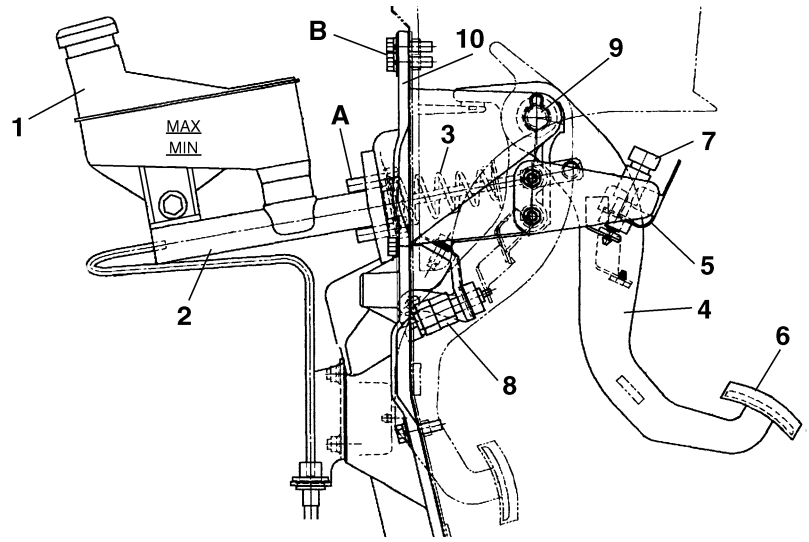


SHTS02Z020300011

| | | | |
|---|---|---|---|
| 1 | Reservoir tank | 6 | Pedal pad |
| 2 | Master cylinder | 7 | Switch (For cruise control) |
| 3 | Return spring | 8 | Switch (For clutch on start) |
| 4 | Clutch pedal | 9 | Pedal shaft |
| 5 | Bracket | 10 | Pedal bracket |

**Tightening torque** **Unit: N·m {kgf·cm, lbf·ft}**

| | | | |
|---|---|---|---|
| A | 41.5-61.5 {424-627, 30-46} | B | 18-26 {184-265, 14-19} |

# OVERHAUL

EN02Z0203H200001

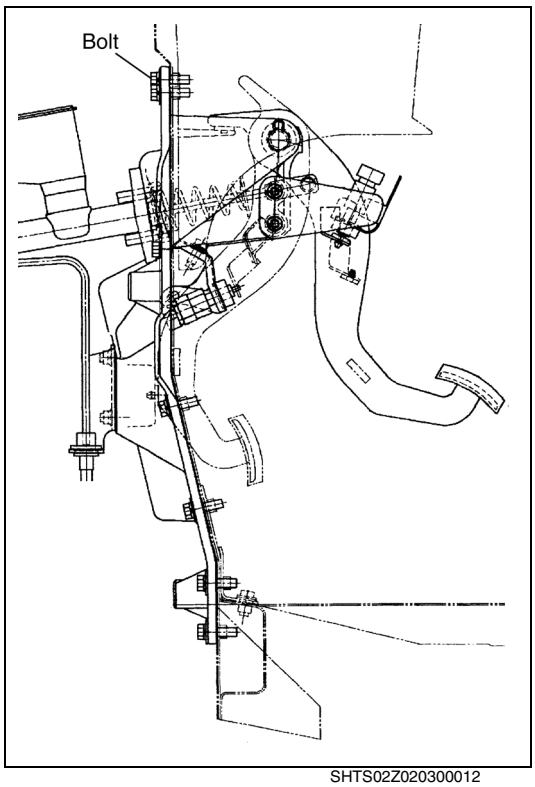

SHTS02Z020300012

## IMPORTANT POINTS - DISMOUNTING

**1. REMOVE THE PEDAL UNIT ASSEMBLY.**

(1) Remove the 10 bolts and 2 nuts and dismount the pedal bracket assembly from the vehicle.

**NOTICE**
**Be careful not to damage the vehicle.**

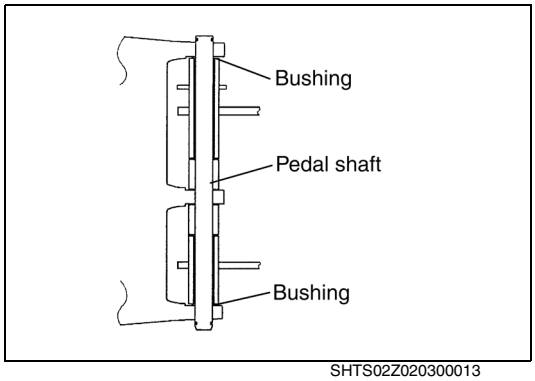

SHTS02Z020300013

**2. REMOVE THE CLUTCH PEDAL.**

(1) Remove the clip, and tap the pedal shaft lightly to remove the clutch pedal using a brass bar and a hammer.

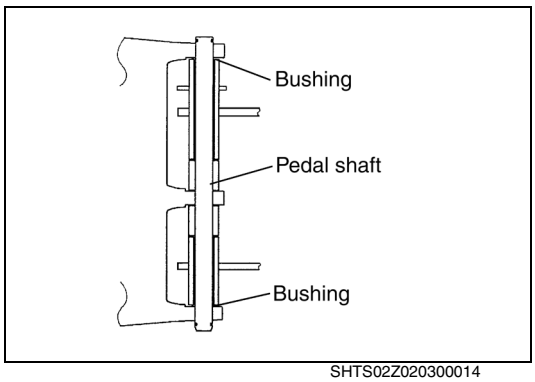

SHTS02Z020300014

## IMPORTANT POINT - MOUNTING

**1. INSTALL THE CLUTCH PEDAL.**

(1) Apply lithium grease to the inner side and outer periphery of the bushing, and install the bushing to the inserting hole on the shaft part of the clutch pedal.

(2) Install the clutch pedal to the installing axle for pedal shaft and install the pedal shaft to the pedal bracket using a plastic hammer.

**2. INSTALL THE PEDAL UNIT ASSEMBLY.**

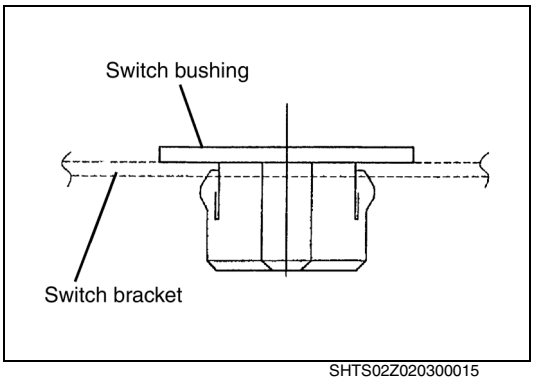

SHTS02Z020300015

**3. INSTALL THE SWITCH FOR CRUISE CONTROL AND CLUTCH ON START.**

(1) Install the switch bushing into the switch bracket.

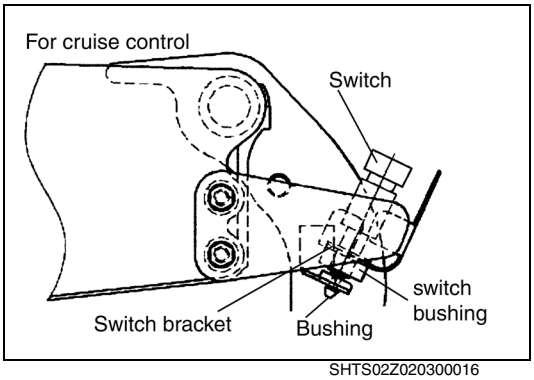

SHTS02Z020300016

(2) Push the switch into the switch bushing until the switch pounds the buffer, then fix the switch by turning if clockwise.

**NOTICE**
**Check that the switch body does not contact the buffer and also that the switch rightly functions.**

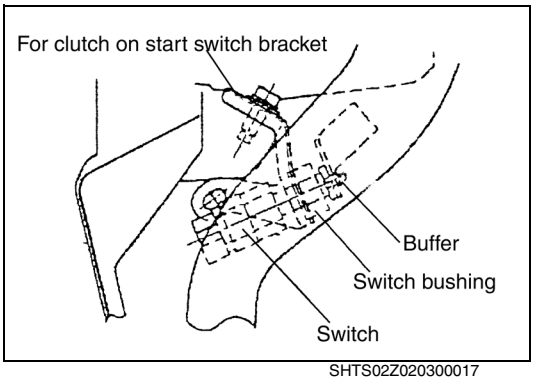

SHTS02Z020300017

## IMPORTANT POINTS - ASSEMBLY

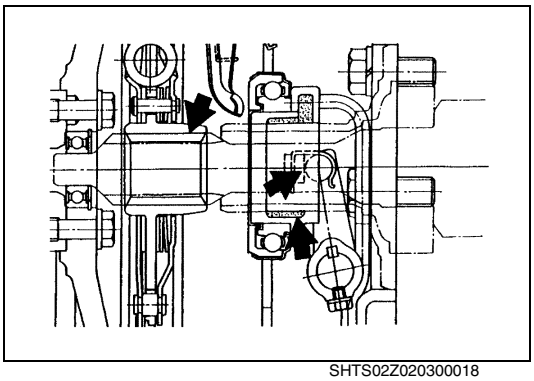
SHTS02Z020300018

**1. APPLY BEARING GREASE OR HEAT RESISTANCE GREASE.**

(1) Apply bearing grease to the following parts.
  a. The release fork and the release bearing hub contact point.
  b. The release bearing hub inner groove.

(2) Apply heat resistance grease to the transmission input shaft spline.

**NOTICE**
**Apply a small amount of grease to the spline.**

# INSPECTION AND REPAIR

EN02Z0203H300002

| Inspection item | Standard | Limit | Remedy | Inspection procedure |
|---|---|---|---|---|
| **Release bearing improper rotation** | **—** | **—** | **Replace release bearing, if necessary.** | **Visual check** 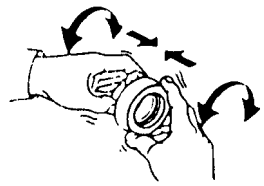 |
| **Release fork and release hub: Wear and damage** | **—** | **—** | **Replace the parts, if necessary.** | **Visual check** |
| **Release shaft bush: Wear and damage** | **Bush inner diameter 25.48-25.52 mm (1.003-1.005 in.)** | **—** | **Replace the bush, if necessary. After pressing in a new bush, grind inner diameter of the bush to be fitted to standard specification.** | **Visual check** 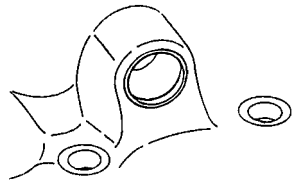 |

# CLUTCH MASTER CYLINDER

## COMPONENT LOCATOR

EN02Z0203D100002

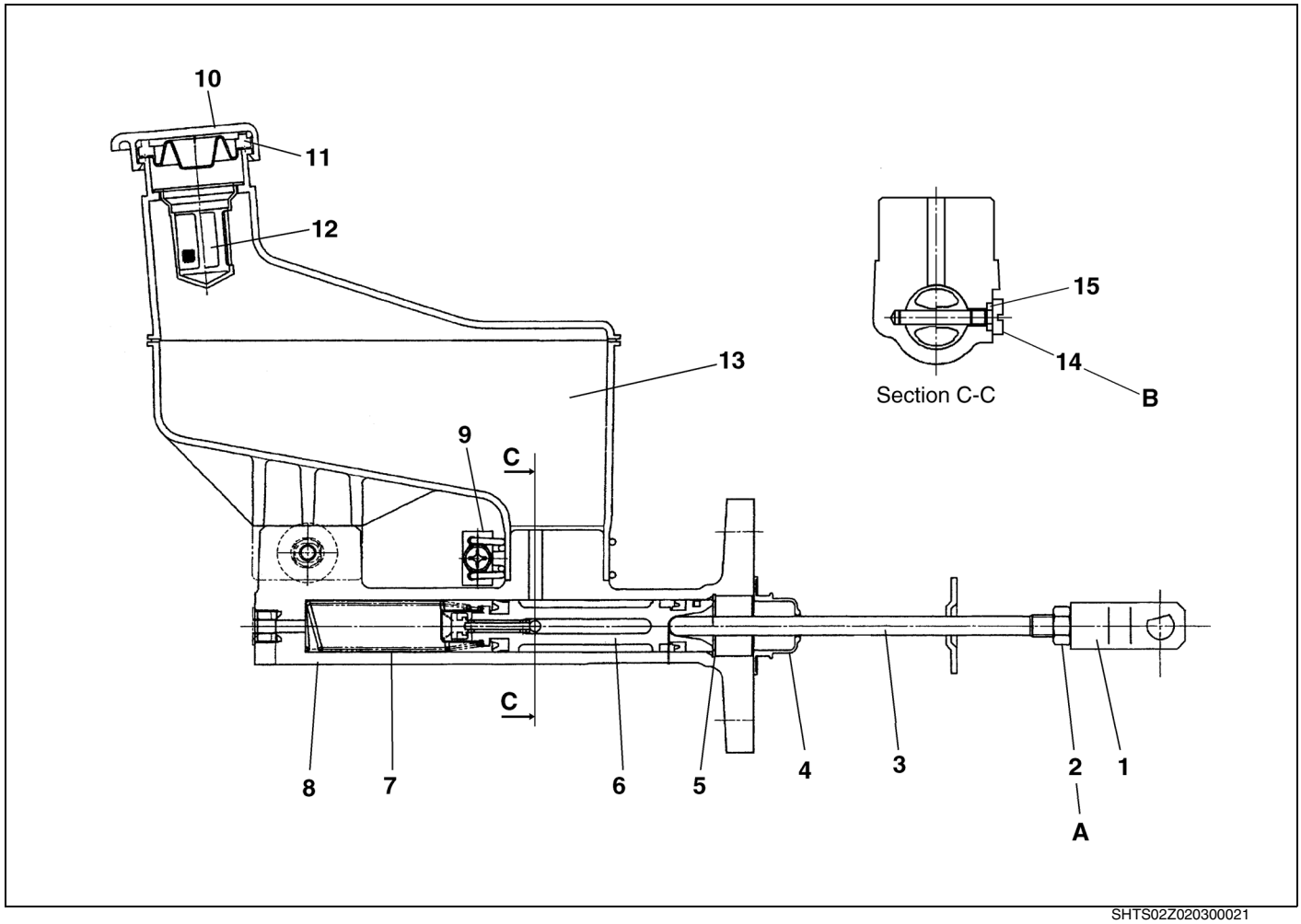


SHTS02Z020300021

| | | | |
|---|---|---|---|
| 1 | Clevis | 9 | Clamp |
| 2 | Lock nut | 10 | Reservoir cap |
| 3 | Push rod | 11 | Gasket |
| 4 | Boot | 12 | Oil reservoir strainer |
| 5 | Retainer ring | 13 | Reservoir tank |
| 6 | Piston | 14 | Stopper bolt |
| 7 | Return spring | 15 | O-ring |
| 8 | Body | | |

**Tightening torque** **Unit: N·m {kgf·cm, lbf·ft}**

| | | | |
|---|---|---|---|
| A | 11.5-16.9 {118-172, 8.5-12.4} | B | 2.4-4.4 {24-45, 1.8-3.2} |

# OVERHAUL

EN02Z0203H200002

## IMPORTANT POINT - DISMOUNTING

**1. REMOVE THE MASTER CYLINDER.**

**NOTICE**

- **Before removing the master cylinder, drain the clutch fluid from the hydraulic line.**
- **Place a small drain pan under the master cylinder to catch the hydraulic fluid. Do not let the clutch fluid remain on a painted floor. Wash it off immediately.**

## IMPORTANT POINT - ASSEMBLY

**1. INSTALL THE RETURN SPRING AND PISTON TO THE CYLINDER.**

**NOTICE**

**Lubricate the cylinder bore and piston with clean clutch fluid.**

# INSPECTION AND REPAIR

EN02Z0203H300003

| Inspection item | Standard | Limit | Remedy | Inspection procedure |
|---|---|---|---|---|
| Piston seal and cup: Wear and damage<br>Cylinder body bore: Scoring and corrosion | — | — | Replace the piston assembly and/or cylinder body, if necessary. | Visual check |

# TRANSMISSION MAIN UNIT (EATON FS 5406/6406)

TR02-001

**TRANSMISSION ASSEMBLY..... TR02-2**
DATA AND SPECIFICATION..... TR02-2
DISMOUNTING AND MOUNTING ..... TR02-3

# TRANSMISSION ASSEMBLY

## DATA AND SPECIFICATION

EN03Z0302I200001

| | | |
|---|---|---|
| **Type** | **Six forward speeds, one reverse<br>1, 2, 3, 4, 5, 6th Synchromesh, Reverse, Constant mesh** | |
| **Gear ratios** | **1st** | **9.01** |
| | **2nd** | **5.27** |
| | **3rd** | **3.22** |
| | **4th** | **2.04** |
| | **5th** | **1.36** |
| | **6th** | **1.00** |
| | **Reverse** | **8.63** |
| **Number of teeth: input shaft** | **24** | |
| **Number of teeth: counter shaft** | **1st gear** | **10** |
| | **2nd gear** | **16** |
| | **3rd gear** | **25** |
| | **4th gear** | **31** |
| | **5th gear** | **38** |
| | **6th gear** | **46** |
| | **Reverse gear** | **10** |
| **Number of teeth: main shaft** | **1st gear** | **47** |
| | **2nd gear** | **44** |
| | **3rd gear** | **42** |
| | **4th gear** | **33** |
| | **5th gear** | **27** |
| | **6th gear** | **24** |
| | **Reverse gear** | **45** |
| **Number or teeth: reverse idle gear** | **21** | |
| **Oil capacity: gear box** | **Approx. 9.2 liters {2.02 Imp.gal/2.44 US gal.}** | |

**NOTICE**
**For other details, refer to EATON manuals.**

# DISMOUNTING AND MOUNTING

EN03Z0302H100001

## IMPORTANT POINTS-DISMOUNTING

⚠ **WARNING**
**Do not work on the transmission while it is hot. This can result in personal injury.**

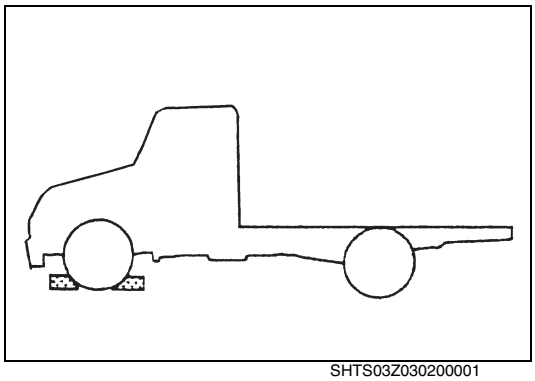
SHTS03Z030200001

**1. BLOCK THE WHEELS**

**2. DRAIN THE TRANSMISSION OIL**

**3. DISCONNECT THE PROPELLER SHAFT**

**4. DISCONNECT THE ELECTRIC HARNESS AND OTHER ATTACHMENTS.**

**5. DISCONNECT THE TRANSMISSION CONTROL LEVER**

**6. DISCONNECT THE CLUTCH SLAVE CYLINDER**

**NOTICE**
**Do not remove the clutch control piping unless absolutely necessary. Air bleeding is not required when reassembling.**

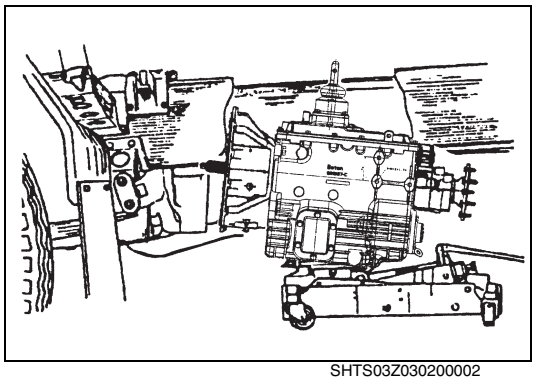
SHTS03Z030200002

**7. REMOVE THE TRANSMISSION.**

(1) Remove the lower bolts around the clutch housing.
(2) Support the transmission using a transmission jack or lifting wires to prevent it from falling.
(3) Remove the remaining bolts around the clutch housing.
(4) Remove the transmission.

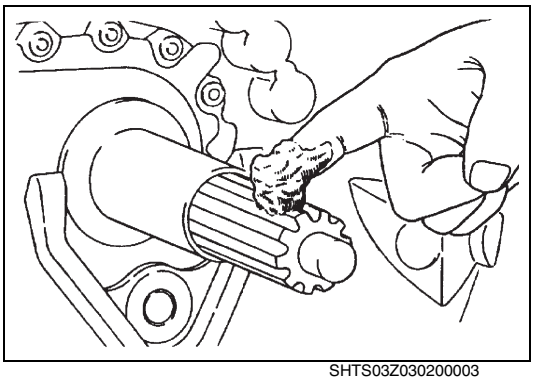
SHTS03Z030200003

## IMPORTANT POINTS-MOUNTING

**1. APPLY HEAT-RESISTANT GREASE TO THE INPUT SHAFT SPLINE.**

**Grease:**
**Refer to RECOMMENDED LUBRICATION in the chapter "CLUTCH MAIN UNIT."**

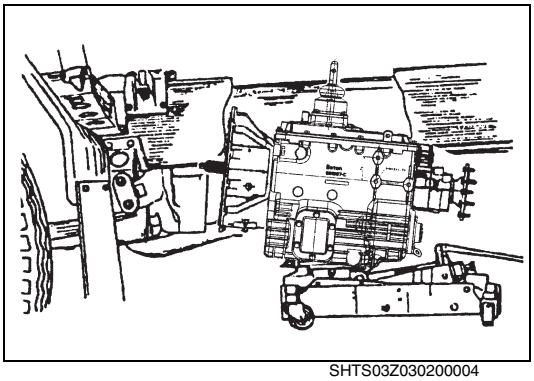
SHTS03Z030200004

**2. INSTALL THE TRANSMISSION.**

(1) Jack up the transmission until the input shaft spline and the clutch disc spline align.

**NOTICE**
**Do not let the rear of the transmission drop and do not let the transmission hang unsupported in the spline hubs of the driven discs because it distorts them and could cause poor clutch operation or clutch release problems.**

(2) Install the upper nuts or bolts around the clutch housing.
(3) Lower the transmission jack and pull the jack out from under the vehicle.

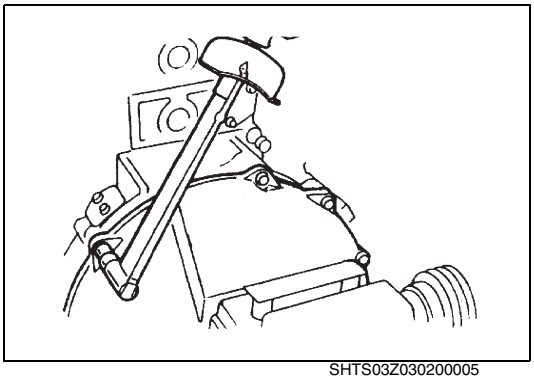
SHTS03Z030200005

(4) Install the remaining nuts or bolts around the clutch housing.
**Tightening Torque:**
**37.5-48.5 N·m {382-494 kgf·cm, 28-35 lbf·ft}**

**3. INSTALL THE CLUTCH SLAVE CYLINDER.**

**4. CONNECT THE TRANSMISSION CONTROL LEVER.**

**5. CONNECT THE ELECTRIC HARNESS AND OTHER ATTACHMENTS.**

**6. CONNECT THE PROPELLER SHAFT.**

**7. FILL THE TRANSMISSION OIL.**

## DISASSEMBLY AND ASSEMBLY

**NOTICE**
**When disassembling and assembling the transmission, refer to the MANUFACTURE ORIGINAL MANUAL.**

# AUTOMATIC TRANSMISSION (ALLISON 2200RDS, 2500RDS, 2200HS, 2500HS)

TR04-001

**AUTOMATIC TRANSMISSION ASSEMBLY ..... TR04-2**

TROUBLESHOOTING ..... TR04-2
SPECIAL TOOL ..... TR04-2
DISMOUNTING AND MOUNTING ..... TR04-2

# AUTOMATIC TRANSMISSION ASSEMBLY

## TROUBLESHOOTING

EN03Z0304F300001

**NOTICE**
**When diagnosing transmission problems, refer to the Allison Shop Manual or troubleshooting procedures for detailed information on items that could be causing the problem.**

## SPECIAL TOOL

EN03Z0304K100001

Prior to removal and installing of automatic transmission, it is necessary to have this special tool.

| Illustration | Part number | Tool name | Remarks |
|---|---|---|---|
|  | S0965-71370 | SPACER COUPLING GUIDE | |

## DISMOUNTING AND MOUNTING

EN03Z0304H100001

### IMPORTANT POINTS - DISMOUNTING

**NOTICE**
**Allison transmission repairs are to be performed by an authorized Allison service dealer.**

**⚠ WARNING**
**Do not work on the transmission while it is hot. This can result in personal injury.**

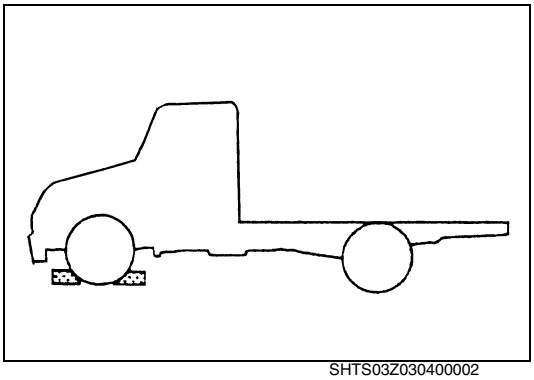
SHTS03Z030400002

**1. BLOCK THE WHEELS.**
(1) Park the vehicle on level ground.
(2) Block the wheels.

**NOTICE**
**Be sure to apply wheel stoppers at the front tires.**

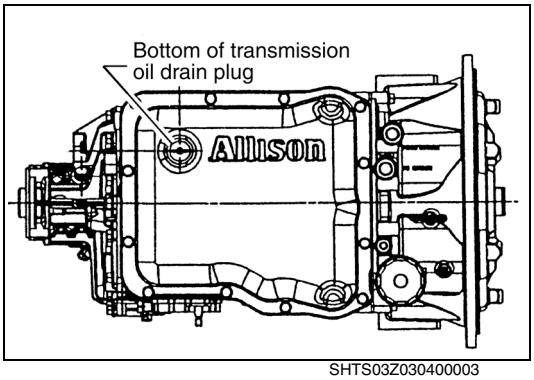

SHTS03Z030400003

**2. DRAIN THE AUTOMATIC TRANSMISSION FLUID.**

(1) Place the drain pan under the transmission.
(2) Remove the drain plug from the transmission and allow the fluid to drain.

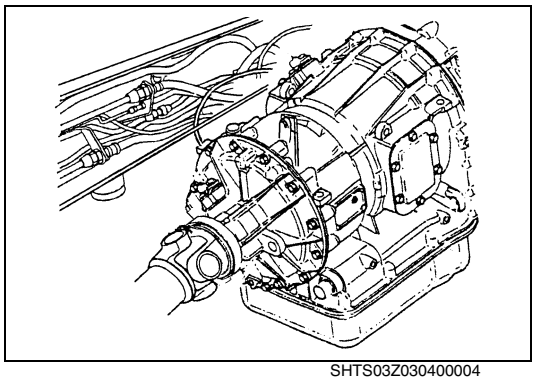

SHTS03Z030400004

**3. REMOVE THE PROPELLER SHAFTS.**

(1) Disconnect the yoke from the propeller spider and remove the center bearing holder.

(2) Move the forward end of the propeller shaft out of the way.

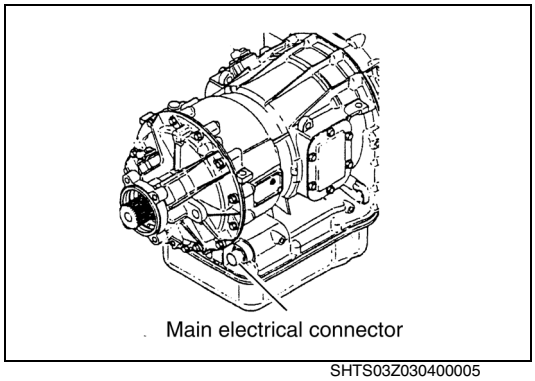


SHTS03Z030400005

**4. DISCONNECT THE ELECTRICAL HARNESS FROM THE REAR OF THE TRANSMISSION.**

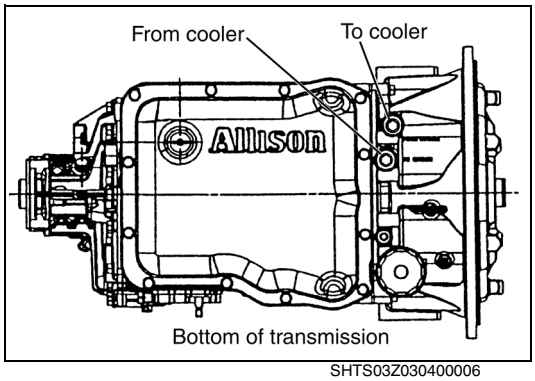


SHTS03Z030400006

**5. DISCONNECT THE OIL COOLER LINES AT THE TRANSMISSION.**

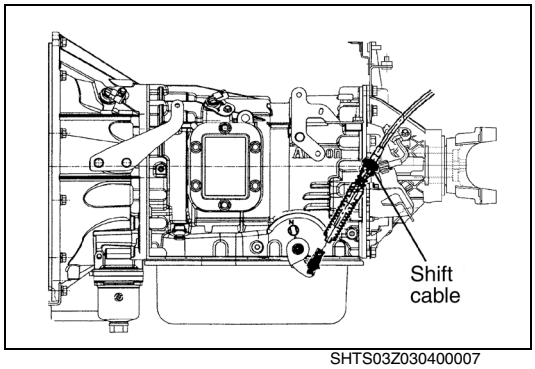


SHTS03Z030400007

**6. DISCONNECT THE SHIFT CABLE FROM THE MANUAL LEVER AT THE TRANSMISSION.**

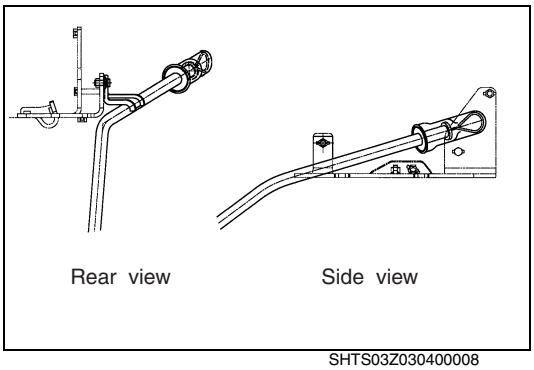

SHTS03Z030400008

**7. REMOVE THE SUPPORT OF THE OIL LEVER GAUGE FROM THE ENGINE CYLINDER BLOCK.**

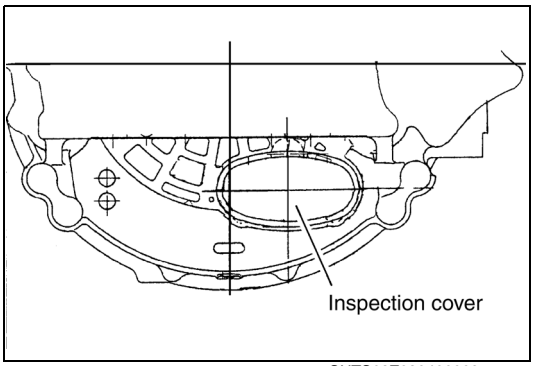

SHTS03Z030400009

**8. REMOVE INSPECTION COVER FROM THE BOTTOM FRONT SIDE OF THE FLYWHEEL HOUSING.**

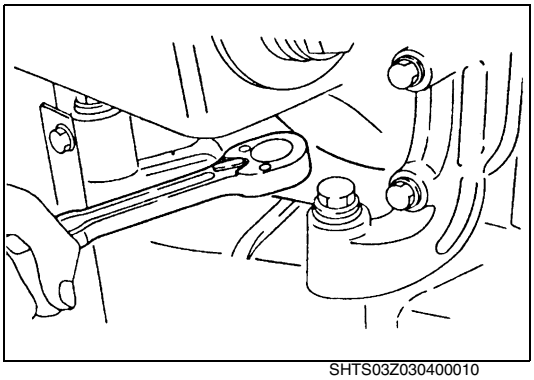
SHTS03Z030400010

**9. REMOVE THE SIX COUPLING BOLTS FROM THE FLYWHEEL.**

(1) Turn the flywheel manually to match the attaching bolt to the slot on the inspection opening at the bottom front side of the flywheel housing.
(2) Remove the coupling bolts one by one.

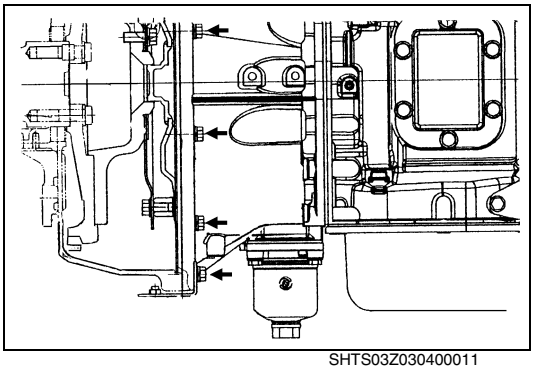
SHTS03Z030400011

**10. REMOVE THE CONVERTER HOUSING ATTACHING BOLTS.**

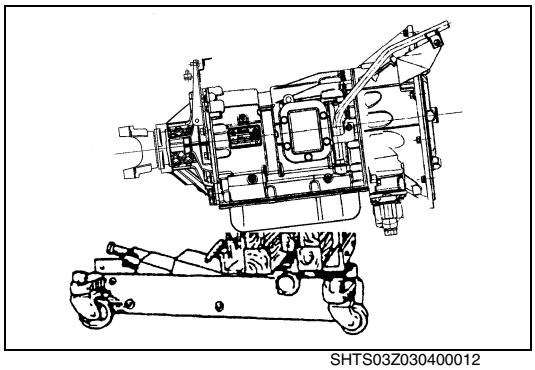

SHTS03Z030400012

**11. POSITION A TRANSMISSION JACK UNDER THE TRANSMISSION AND SECURE THE TRANSMISSION TO THE JACK WITH A SAFETY CHAIN OR WIRE CABLE.**

**12. REMOVE THE REMAINING CONVERTER HOUSING FROM THE FLYWHEEL HOUSING ATTACHING BOLTS.**

**13. PULL OUT THE TRANSMISSION BACKWARDS.**

**⚠ WARNING**

**Do not lower the front end of the transmission. If lowered, the torque converter may slide out of the transmission and you may be injured.**

## IMPORTANT POINTS - MOUNTING

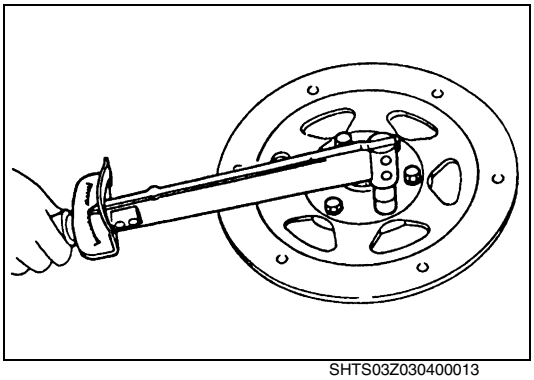

SHTS03Z030400013

**1. TIGHTEN THE FLEX PLATE, SPACER COUPLING AND WEAR PLATE.**
**Tightening Torque:**
**78.5-87.5 N·m {801-893 kgf·cm, 58-64.5 lbf·ft}**

**NOTICE**
**Before tightening, face the chamfered outer rim of the wear plate to the flex plate. If assembled to the contrary, the wear plate edge hits the flex plate and its strength is reduced. Painted surface of the wear plate should be located facing the transmission side.**

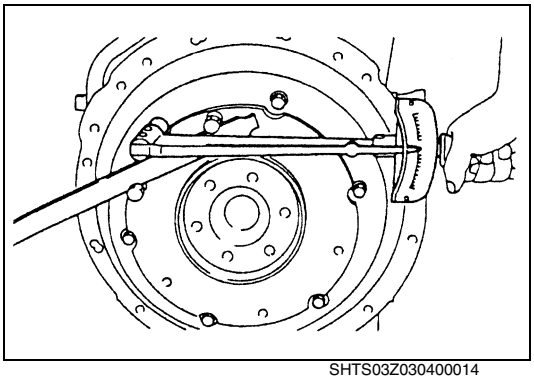

SHTS03Z030400014

**2. TIGHTEN THE TORQUE CONVERTER AND THE FLEX PLATE.**
**Tightening Torque:**
**57-68 N·m {582-693 kgf·cm, 42-50 lbf·ft}**

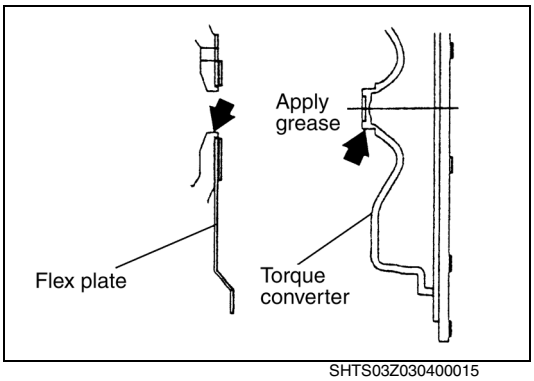


SHTS03Z030400015

**NOTICE**
**Apply grease containing molybdenum disulfide to the boss at the end of the torque converter before assembling. Without grease, the flex plate will not slide well and abnormal force will be generated, causing the flex plate to break.**

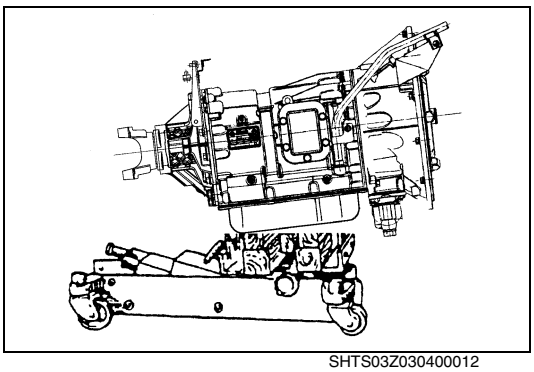

SHTS03Z030400012

**3. MOUNT THE TRANSMISSION ASSEMBLY ON A TRANSMISSION JACK. THEN MOVE THE ASSEMBLY INTO THE POSITION.**

**⚠ WARNING**
**Do not lower the front end of the transmission. If lowered, the torque converter may slide out of the transmission and you can be injured.**

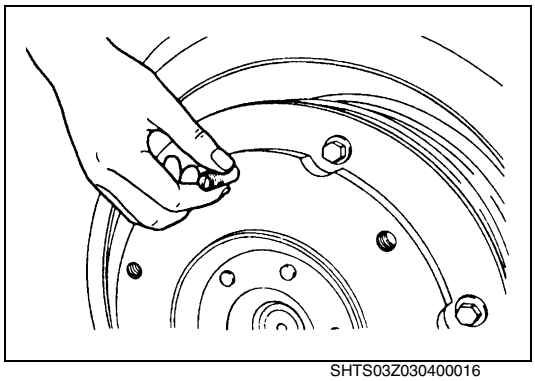

SHTS03Z030400016

**4. SCREW THE SPECIAL TOOL "GUIDE" BY HAND INTO THE SPACER COUPLING OF THE TRANSMISSION ASSEMBLY. ROTATE THE TORQUE CONVERTER SO THAT THE GUIDE FACES DOWNWARD.**
**SST: Spacer coupling guide (S0965-71370)**

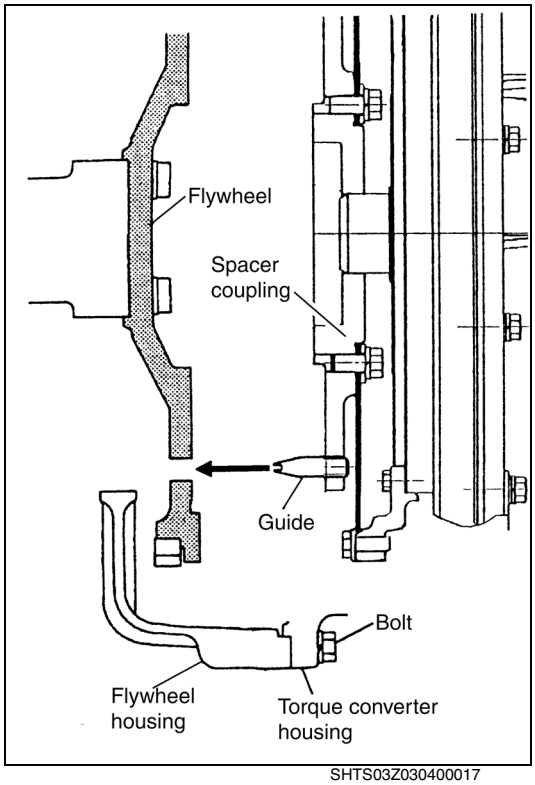


SHTS03Z030400017

**5. ROTATE THE ENGINE TO ALIGN THE FITTING HOLE OF THE ENGINE FLYWHEEL AND SPACER COUPLING WITH THE INSPECTION HOLE ON THE FRONT OF THE FLYWHEEL HOUSING.**

**NOTICE**
**First switch off the power so that the engine will not start.**

**6. MOVE THE TRANSMISSION JACK SLOWLY AND INSERT THE GUIDE INTO THE FITTING HOLE OF THE FLYWHEEL.**

**⚠ WARNING**
**Do not lower the front side of the transmission. If lowered, the torque converter may slide out of the transmission and you may be injured.**

**7. MOVE THE TRANSMISSION JACK SLOWLY AND ADJUST BY BRINGING THE FITTING FACES OF THE TORQUE CONVERTER HOUSING AND THE FLYWHEEL HOUSING.**

**8. TIGHTEN THE BOLTS TO JOIN THE TORQUE CONVERTER HOUSING AND THE FLYWHEEL HOUSING.**
**Tightening Torque:**
**37-57 N·m {378-581 kgf·cm, 28-42 lbf·ft}**

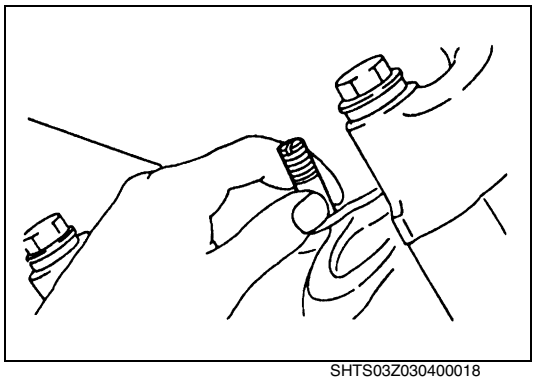

SHTS03Z030400018

**9. LOWER AND REMOVE THE TRANSMISSION JACK.**

**10. TAKE THE GUIDE OUT OF THE INSPECTION HOLE ON THE FLYWHEEL HOUSING FRONT WITH A SCREW DRIVER.**

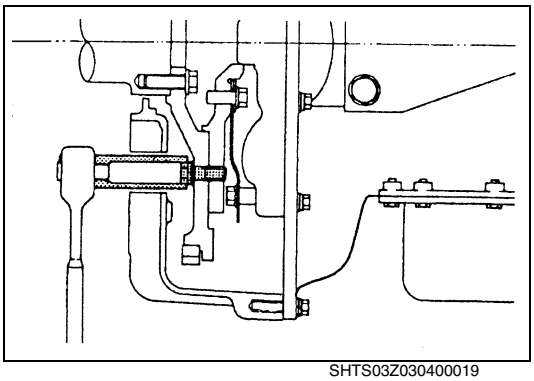

SHTS03Z030400019

**11. LIGHTLY TIGHTEN THE BOLTS JOINING THE FLYWHEEL AND THE SPACER COUPLING THROUGH THE INSPECTION HOLE. IN ORDER TO TIGHTEN THE BOLTS, TURN THE RING GEAR WITH A SCREW DRIVER THROUGH THE TIMING ADJUSTMENT HOLE ON THE UPPER PART OF THE FLYWHEEL HOUSING.**

**NOTICE**

**If the ring gear does not turn smoothly with a screw driver, remove the transmission and repeat the procedure again from 5 above, because the hub ends of the flywheel and the spacer coupling do not fit well. Tightening bolts in such a condition will cause damage to the bolts and jamming of the engine.**

**12. TIGHTEN THE BOLTS PRETIGHTENED IN STEP 11.**
**Tightening Torque:**
**64-85 N·m {653-867 kgf·cm, 48-62 lbf·ft}**

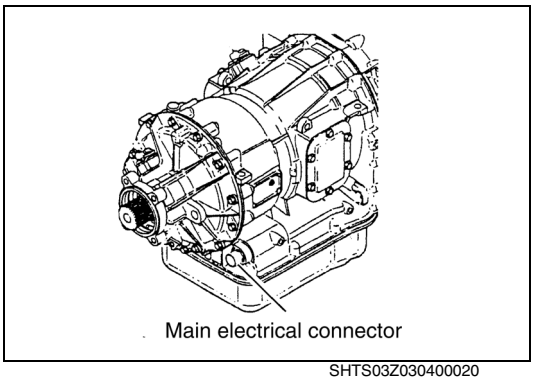


SHTS03Z030400020

**13. CONNECT THE ELECTRICAL HARNESS TO THE REAR PART OF THE TRANSMISSION.**

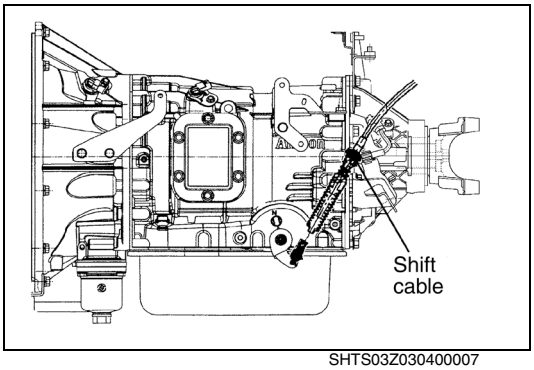


SHTS03Z030400007

**14. INSTALL THE SHIFT CABLE TO THE LEVER AND BRACKET.**

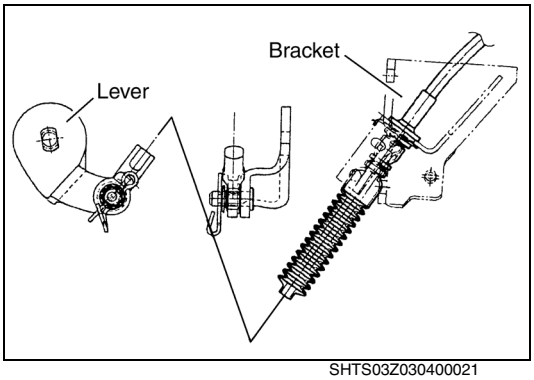


SHTS03Z030400021

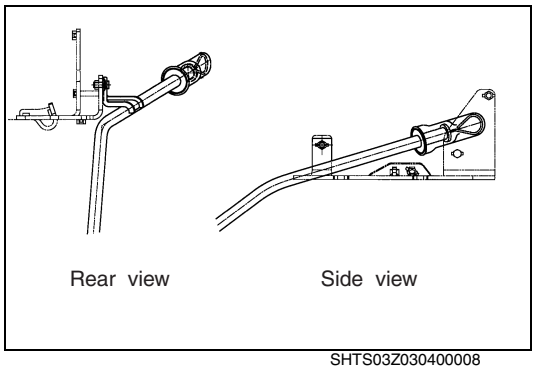

SHTS03Z030400008

**15. INSTALL THE SUPPORT OF THE OIL LEVEL GAUGE TO THE ENGINE CYLINDER BLOCK.**

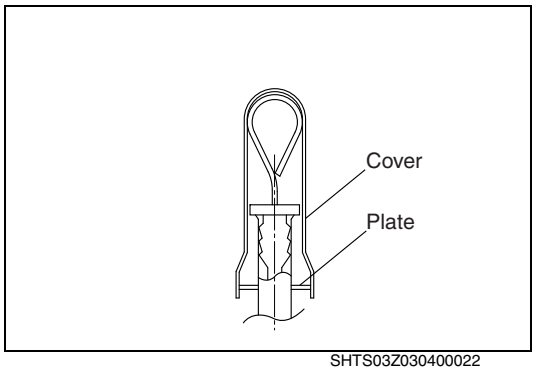

SHTS03Z030400022

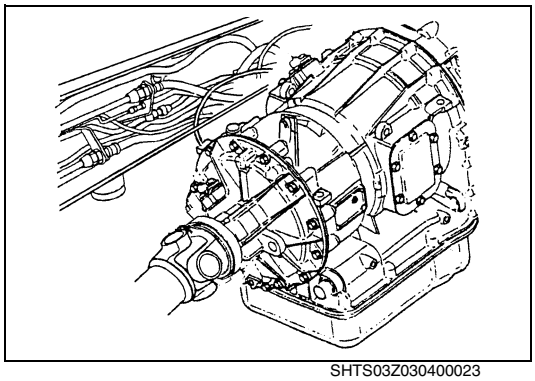
SHTS03Z030400023

**16. INSTALL THE PROPELLER SHAFT YOKE TO THE TRANSMISSION YOKE.**

**Tightening Torque:**
**61-81 N·m {622-826 kgf·cm, 45-60 lbf·ft}**

**17. INSTALL THE CENTER BEARING HOLDER TO THE FRAME.**

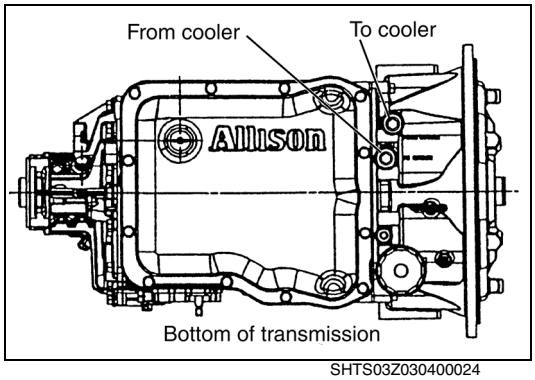

SHTS03Z030400024

**18. CONNECT THE OIL COOLER LINE.**

(1) For connecting the transmission case and joints, insert O-rings in the grooves of the joints before tightening.

**NOTICE**
**Apply automatic transmission fluid to the O-rings when inserting them. If the fluid is not applied, the O-rings will not be inserted smoothly and will thus be damaged, causing oil to leak.**

**19. REMOVE THE CAP OF THE OIL FILLER TUBE AND POUR AUTOMATIC TRANSMISSION FLUID INTO THE TUBE.**

**Automatic transmission fluid:**
**Refer to RECOMMENDED LUBRICANTS LIST in the chapter "GENERAL INTRODUCTION (CHASSIS)."**

**NOTICE**
**For further details, consult your nearest ALLISON representative or ALLISON service station.**

# AUTOMATIC TRANSMISSION (ALLISON 3000RDS, 3500RDS)

TR04-002

**AUTOMATIC TRANSMISSION ASSEMBLY ..... TR04-2**

TROUBLESHOOTING ..... TR04-2
SPECIAL TOOL ..... TR04-2
DISMOUNTING AND MOUNTING ..... TR04-2

# AUTOMATIC TRANSMISSION ASSEMBLY

## TROUBLESHOOTING

EN03Z0304F300001

**NOTICE**
**When diagnosing transmission problems, refer to the Allison Shop Manual or troubleshooting procedures for detailed information on items that could be causing the problem.**

## SPECIAL TOOL

EN03Z0304K100001

Prior to removal and installing of automatic transmission, it is necessary to have this special tool.

| Illustration | Part number | Tool name | Remarks |
|---|---|---|---|
|  | S0965-71370 | SPACER COUPLING GUIDE | |

## DISMOUNTING AND MOUNTING

EN03Z0304H100001

### IMPORTANT POINTS - DISMOUNTING

**NOTICE**
**Allison transmission repairs are to be performed by an authorized Allison service dealer.**

**⚠ WARNING**
**Do not work on the transmission while it is hot. This can result in personal injury.**

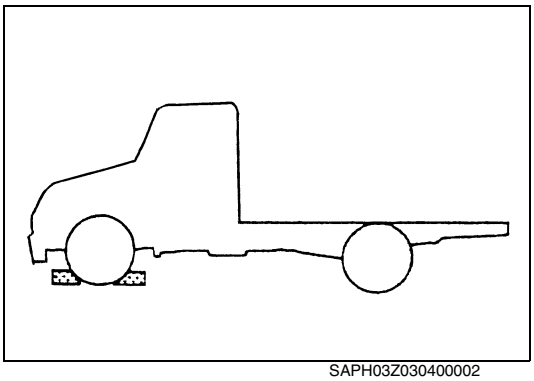

SAPH03Z030400002

**1. BLOCK THE WHEELS.**
(1) Park the vehicle on level ground.
(2) Block the wheels.

**NOTICE**
**Be sure to apply wheel stoppers at the front tires.**

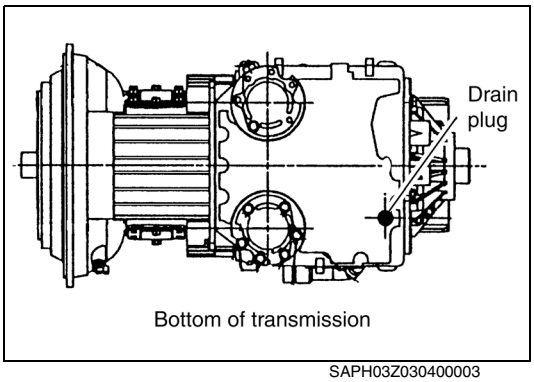


SAPH03Z030400003

**2. DRAIN THE AUTOMATIC TRANSMISSION FLUID.**
(1) Place the drain pan under the transmission.
(2) Remove the drain plug from the transmission and allow the fluid to drain.

**3. REMOVE THE PROPELLER SHAFTS.**
(1) Disconnect the yoke from the propeller spider and remove the center bearing holder.
(2) Move the forward end of the propeller shaft out of the way.

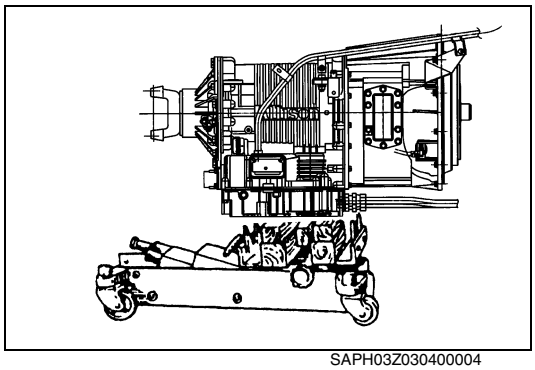

SAPH03Z030400004

**4. REMOVE THE CONNECTORS OF MAIN CONNECTOR, SPEED SENSOR AND CONVERTER TURBINE SENSOR.**

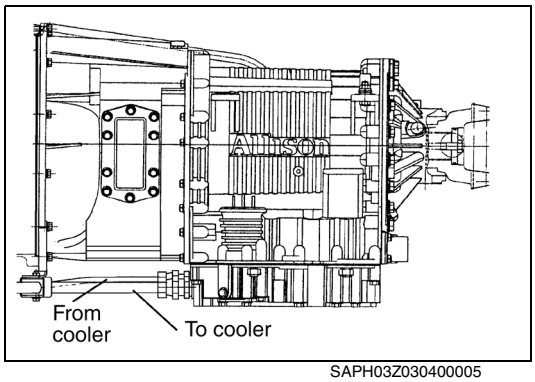


SAPH03Z030400005

**5. DISCONNECT THE OIL COOLER LINES AT THE TRANSMISSION.**

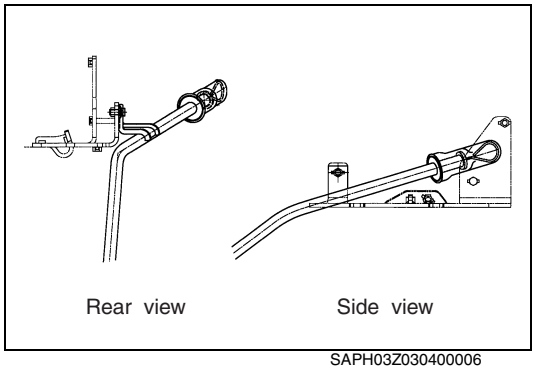


SAPH03Z030400006

**6. REMOVE THE SUPPORT OF THE OIL LEVEL GAUGE FROM THE ENGINE CYLINDER BLOCK.**

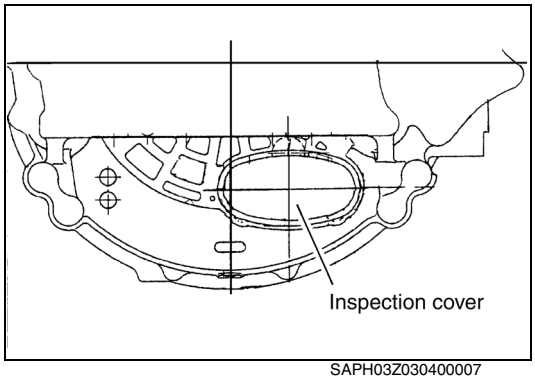


SAPH03Z030400007

**7. REMOVE INSPECTION COVER FROM THE BOTTOM FRONT SIDE OF THE FLYWHEEL HOUSING.**

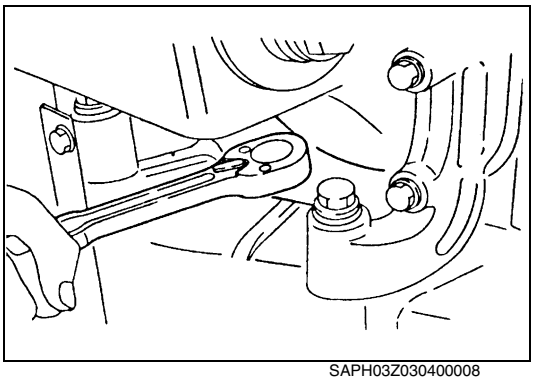
SAPH03Z030400008

**8. REMOVE THE SIX COUPLING BOLTS FROM THE FLYWHEEL.**

(1) Turn the flywheel manually to match the attaching bolt to the slot on the inspection opening at the bottom front side of the flywheel housing.

(2) Remove the coupling bolts one by one.

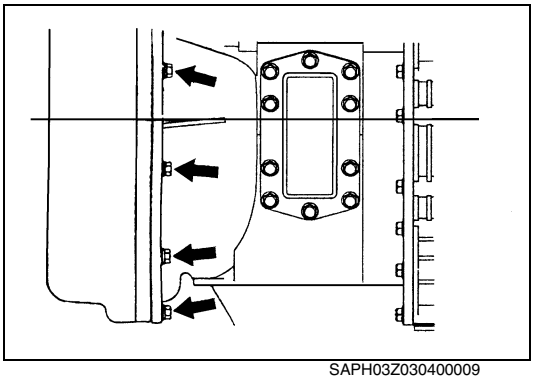
SAPH03Z030400009

**9. REMOVE THE CONVERTER HOUSING ATTACHING BOLTS LOWER THE TRANSMISSION.**

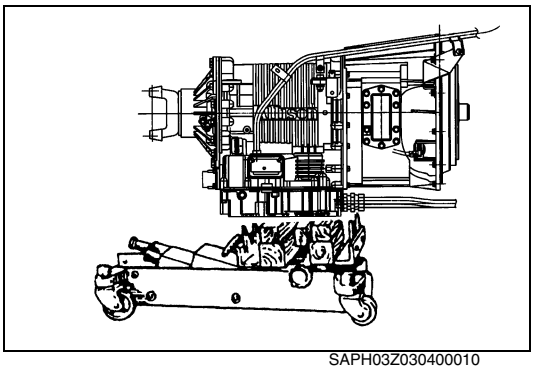
SAPH03Z030400010

**10. POSITION A TRANSMISSION JACK UNDER THE TRANSMISSION AND SECURE THE TRANSMISSION TO THE JACK WITH A SAFETY CHAIN OR WIRE CABLE.**

**11. REMOVE THE REMAINING CONVERTER HOUSING FROM THE FLYWHEEL HOUSING ATTACHING BOLTS.**

**12. PULL OUT THE TRANSMISSION BACKWARDS.**

**⚠ WARNING**

**Do not lower the front end of the transmission. If lowered, the torque converter may slide out of the transmission and you can be injured.**

## IMPORTANT POINTS - MOUNTING

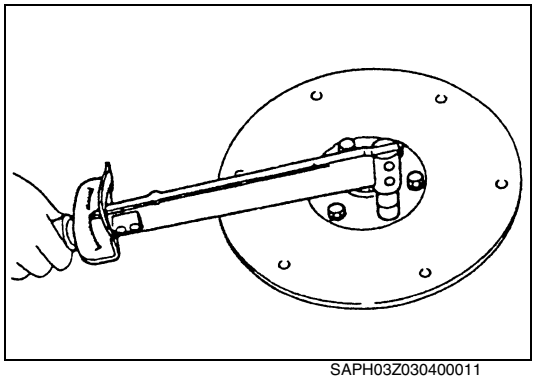

SAPH03Z030400011

**1. TIGHTEN THE FLEX PLATE, SPACER COUPLING AND WEAR PLATE.**
**Tightening Torque:**
**64-85 N·m {653-867 kgf·cm, 48-62 lbf·ft}**

**NOTICE**
**Before tightening, face the chamfered outer rim of the wear plate to the flex plate. If assembled to the contrary, the wear plate edge hits the flex plate and its strength is reduced. Painted surface of the wear plate should be located facing the transmission side.**

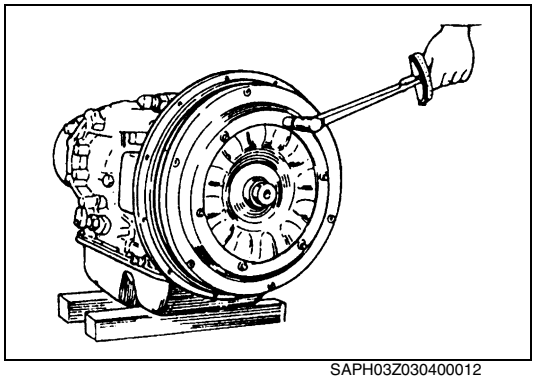

SAPH03Z030400012

**2. TIGHTEN THE TORQUE CONVERTER AND THE ADAPTER.**
**Tightening Torque:**
**33.5-38.5 N·m {342-392 kgf·cm, 25-28 lbf·ft}**

**NOTICE**
**Apply grease containing molybdenum disulfide to the boss at the end of the torque converter before assembling. Without grease, the flex plate will not slide well and abnormal force will be generated, causing the flex plate to break.**

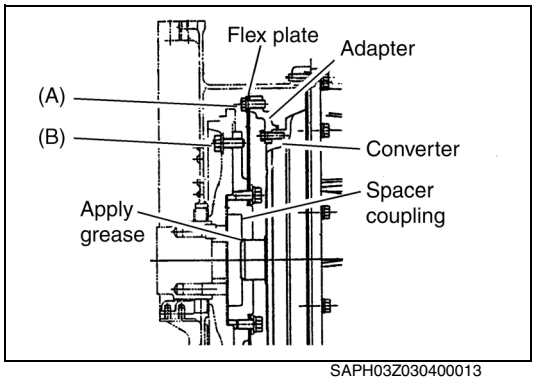


SAPH03Z030400013

**3. INSTALL THE FLEX PLATE, SPACER COUPLING AND WEAR PLATE. THEN TIGHTEN THE FLEX PLATE AND ADAPTER TOGETHER.**
**Tightening Torque:**
**63-73 N·m {643-744 kgf·cm, 47-53 lbf·ft}**

**NOTICE**
**Flex plate's hole (A) and spacer's hole (B) must be same position (by this, lock the flywheel and (A)'s bolt is suitable)**

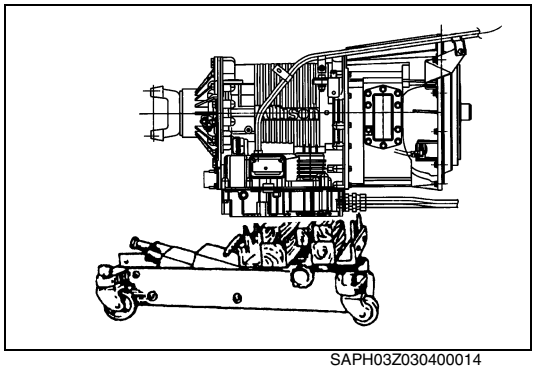

SAPH03Z030400014

**4. MOUNT THE TRANSMISSION ASSEMBLY ON A TRANSMISSION JACK. THEN MOVE THE ASSEMBLY INTO THE POSITION.**

**⚠ WARNING**
**Do not lower the front end of the transmission. If lowered, the torque converter may slide out of the transmission and you can be injured.**

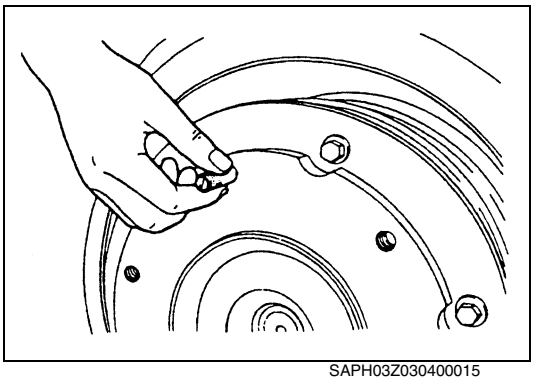

SAPH03Z030400015

**5. SCREW THE SPECIAL TOOL "GUIDE" BY HAND INTO THE SPACER COUPLING OF THE TRANSMISSION ASSEMBLY. ROTATE THE TORQUE CONVERTER SO THAT THE GUIDE FACES DOWNWARD.**
**SST: Spacer coupling guide (S0965-71370)**

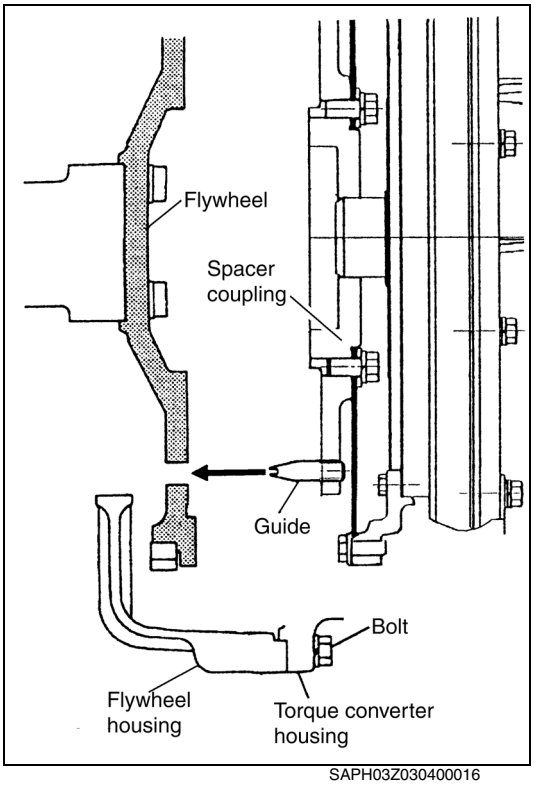


SAPH03Z030400016

**6. ROTATE THE ENGINE TO ALIGN THE FITTING HOLE OF THE ENGINE FLYWHEEL AND SPACER COUPLING WITH THE INSPECTION HOLE ON THE FRONT OF THE FLYWHEEL HOUSING.**

**NOTICE**
**First switch off the power so that the engine will not start.**

**7. MOVE THE TRANSMISSION JACK SLOWLY AND INSERT THE GUIDE INTO THE FITTING HOLE OF THE FLYWHEEL.**

**⚠ WARNING**
**Do not lower the front side of the transmission. If lowered, the torque converter may slide out of the transmission and you can be injured.**

**8. MOVE THE TRANSMISSION JACK SLOWLY AND ADJUST BY BRINGING THE FITTING FACES OF THE TORQUE CONVERTER HOUSING AND THE FLYWHEEL HOUSING.**

**9. TIGHTEN THE BOLTS TO JOIN THE TORQUE CONVERTER HOUSING AND THE FLYWHEEL HOUSING.**
**Tightening Torque:**
**37-57 N·m {439-520 kgf·cm, 32-38 lbf·ft}**

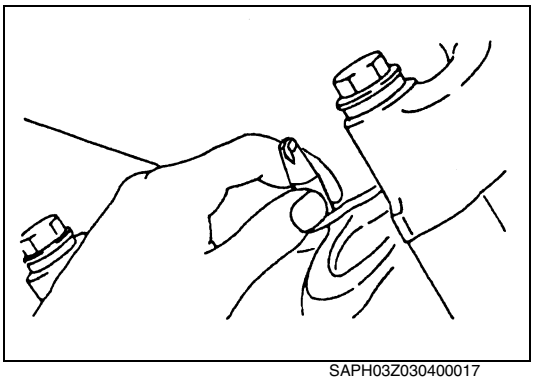

SAPH03Z030400017

**10. LOWER AND REMOVE THE TRANSMISSION JACK.**

**11. TAKE THE GUIDE OUT OF THE INSPECTION HOLE ON THE FLYWHEEL HOUSING FRONT WITH A SCREW DRIVER.**

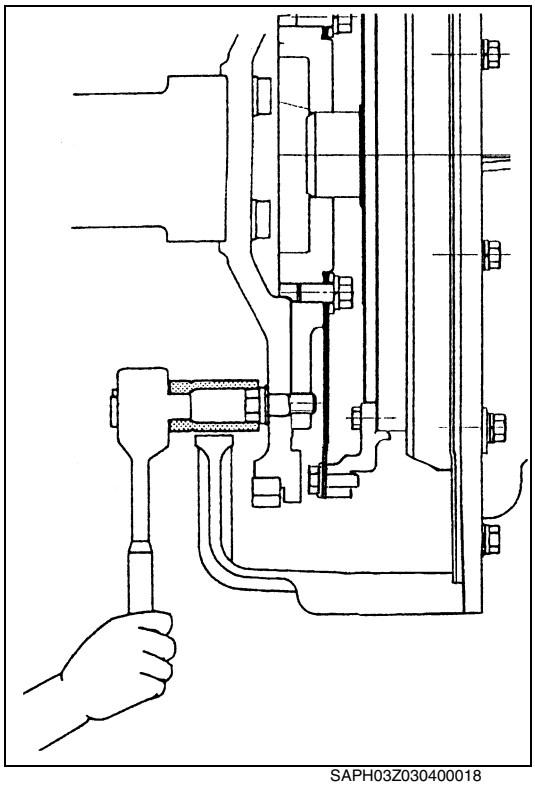

SAPH03Z030400018

**12. LIGHTLY TIGHTEN THE BOLTS JOINING THE FLYWHEEL AND THE SPACER COUPLING THROUGH THE INSPECTION HOLE. IN ORDER TO TIGHTEN THE BOLTS, TURN THE RING GEAR WITH A SCREW DRIVER THROUGH THE TIMING ADJUSTMENT HOLE ON THE UPPER PART OF THE FLYWHEEL HOUSING.**

**NOTICE**

**If the ring gear does not turn smoothly with a screw driver, remove the transmission and repeat the procedure again from 6 above, because the hub ends of the flywheel and the spacer coupling do not fit well. Tightening bolts in such a condition will cause damage to the bolts and jamming of the engine.**

**13. TIGHTEN THE BOLTS PRETIGHTENED IN STEP 12.**
**Tightening Torque:**
**64-85 N·m {653-867 kgf·cm, 48-62 lbf·ft}**

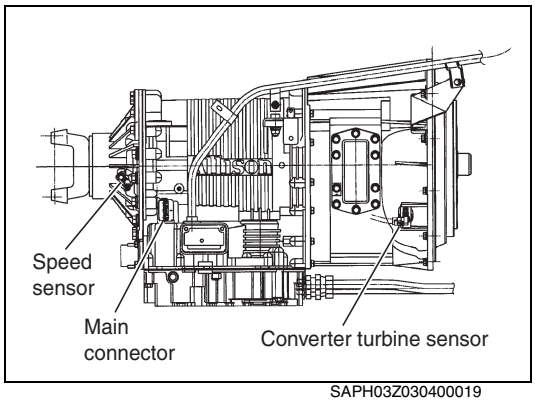


SAPH03Z030400019

**14. INSTALL THE SPEED SENSOR HARNESS TO THE REAR PART OF THE TRANSMISSION.**

**15. CONNECT THE CONNECTORS OF WIRING.**

**16. INSTALL THE PROPELLER SHAFT YOKE TO THE TRANSMISSION YOKE.**

**17. INSTALL THE CENTER BEARING HOLDER TO THE FRAME.**

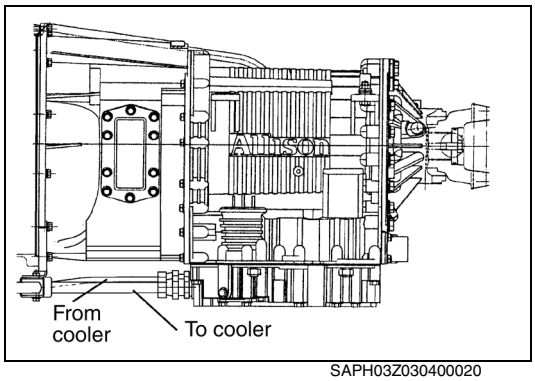


SAPH03Z030400020

**18. CONNECT THE OIL COOLER LINE.**

(1) For connecting the transmission case and joints, insert O-rings in the grooves of the joints before tightening.

**NOTICE**

**Apply automatic transmission fluid to the O-rings when inserting them. If the fluid is not applied, the O-rings will not be inserted smoothly and will thus be damaged, causing oil to leak.**

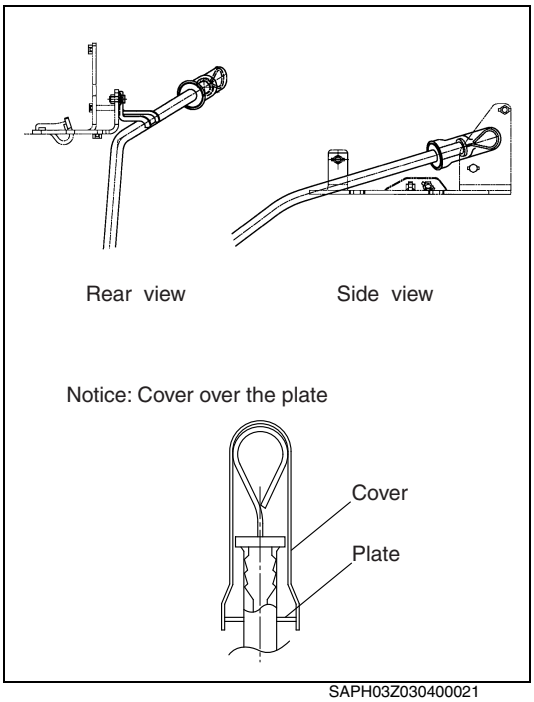


SAPH03Z030400021

**19. INSTALL THE SUPPORT OF THE OIL LEVEL GAUGE TO THE ENGINE CYLINDER BLOCK.**

**20. REMOVE THE CAP OF THE OIL FILLER TUBE AND POUR AUTOMATIC TRANSMISSION FLUID INTO THE TUBE.**

**Automatic transmission fluid:**
**Refer to RECOMMENDED LUBRICANTS LIST in the chapter "GENERAL INTRODUCTION (CHASSIS)."**

**NOTICE**
**For further details, consult your nearest ALLISON representative or ALLISON service station.**

# TRANSMISSION/TRANSFER CONTROL (EATON MANUAL TRANSMISSION)

TR06-001

**TRANSMISSION CONTROL UNIT ..... TR06-2**
TROUBLESHOOTING ..... TR06-2
COMPONENT LOCATOR ..... TR06-3
OVERHAUL ..... TR06-4

# TRANSMISSION CONTROL UNIT

## TROUBLESHOOTING

EN03Z0306F300001

### 1. MANUAL TRANSMISSION

| Symptom | Possible cause | Remedy/Prevention |
|---|---|---|
| **Unable to shift the gear or very difficult to shift when the engine is turned off.** | Damaged shift lever assembly | Replace shift lever. |
| | Damaged or broken transmission upper cover (lever, spring, etc.) | Replace. |
| | The looseness of tightening bolt and nut | Inspect and tighten each bolt and nut. |
| **Gear disengages when driving on bumpy roads.** | Loose control lever joint | Tighten or replace. |
| **The play of the lever is excessive.** | A joint is seriously worn | Replace the joint. |
| | The looseness of tightening bolt and nut | Inspect and tighten each bolt and nut. |

# COMPONENT LOCATOR

EN03Z0306D100001

## 1. MANUAL TRANSMISSION CONTROL

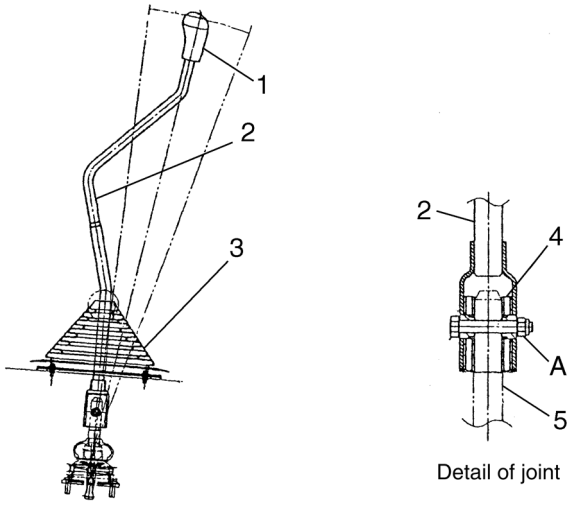


SHTS03Z030600001

| | | | |
|---|---|---|---|
| 1 | Knob | 4 | Isolator |
| 2 | Shift lever | 5 | Stub lever |
| 3 | Boot | | |

**Tightening torque** **Unit: N·m {kgf·cm, lbf·ft}**

| | | |
|---|---|---|
| A | 14-16 {143-163, 10-11.8} | |

# OVERHAUL

EN03Z0306H200001

## IMPORTANT POINT - ASSEMBLY

**1. MANUAL TRANSMISSION CONTROL**

(1) When you connect the shift lever and the stub lever, tighten the nut with the isolator steadily.
**Tightening Torque:**
**14-16 N·m {143-163 kgf·cm, 10-11.8 lbf·ft}**

(2) Check the shift and select stroke.

[FS5406, 6406]

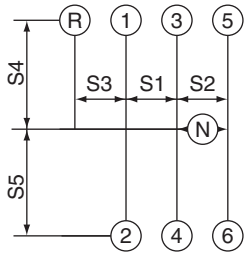


SHTS03Z030600002

**Unit: mm {in.}**

| TM | FS5406, 6406 |
|---|---|
| S1 | 70-90 (2.76-3.54) |
| S2 | 70-90 (2.76-3.54) |
| S3 | 70-90 (2.76-3.54) |
| S4 | 100-120 (3.93-4.72) |
| S5 | 100-120 (3.93-4.72) |

# TRANSMISSION/TRANSFER CONTROL (ALLISON AUTOMATIC TRANSMISSION) TR06-002

**TRANSMISSION CONTROL UNIT ..... TR06-2**
TROUBLESHOOTING ..... TR06-2
COMPONENT LOCATOR ..... TR06-2
OVERHAUL ..... TR06-4

# TRANSMISSION CONTROL UNIT

## TROUBLESHOOTING

EN03Z0306F300001

**1. AUTOMATIC TRANSMISSION**

(1) Allison 2200RDS, 2200HS, 2500RDS, 2500HS, 3000RDS, 3500RDS auto-transmission problem, refer to the Allison shop manual or troubleshooting procedures for detailed information on items that could be causing the problem.

## COMPONENT LOCATOR

EN03Z0306D100001

**1. AUTOMATIC TRANSMISSION CONTROL**

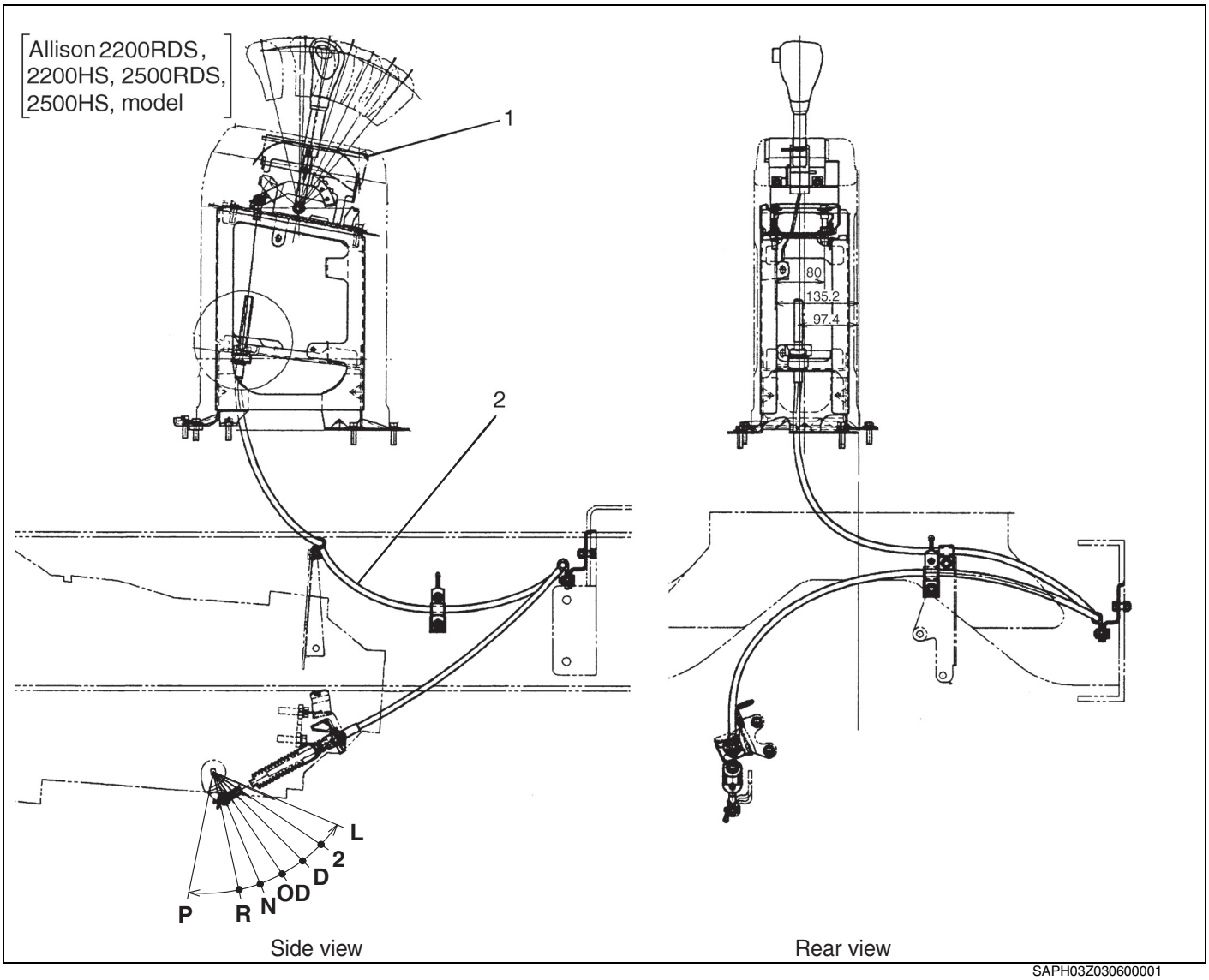


SAPH03Z030600001

| | | | |
|---|---|---|---|
| 1 | Selector assembly | 2 | Shift cable assembly |

**[Allison 3000RDS,3500RDS button-type]**

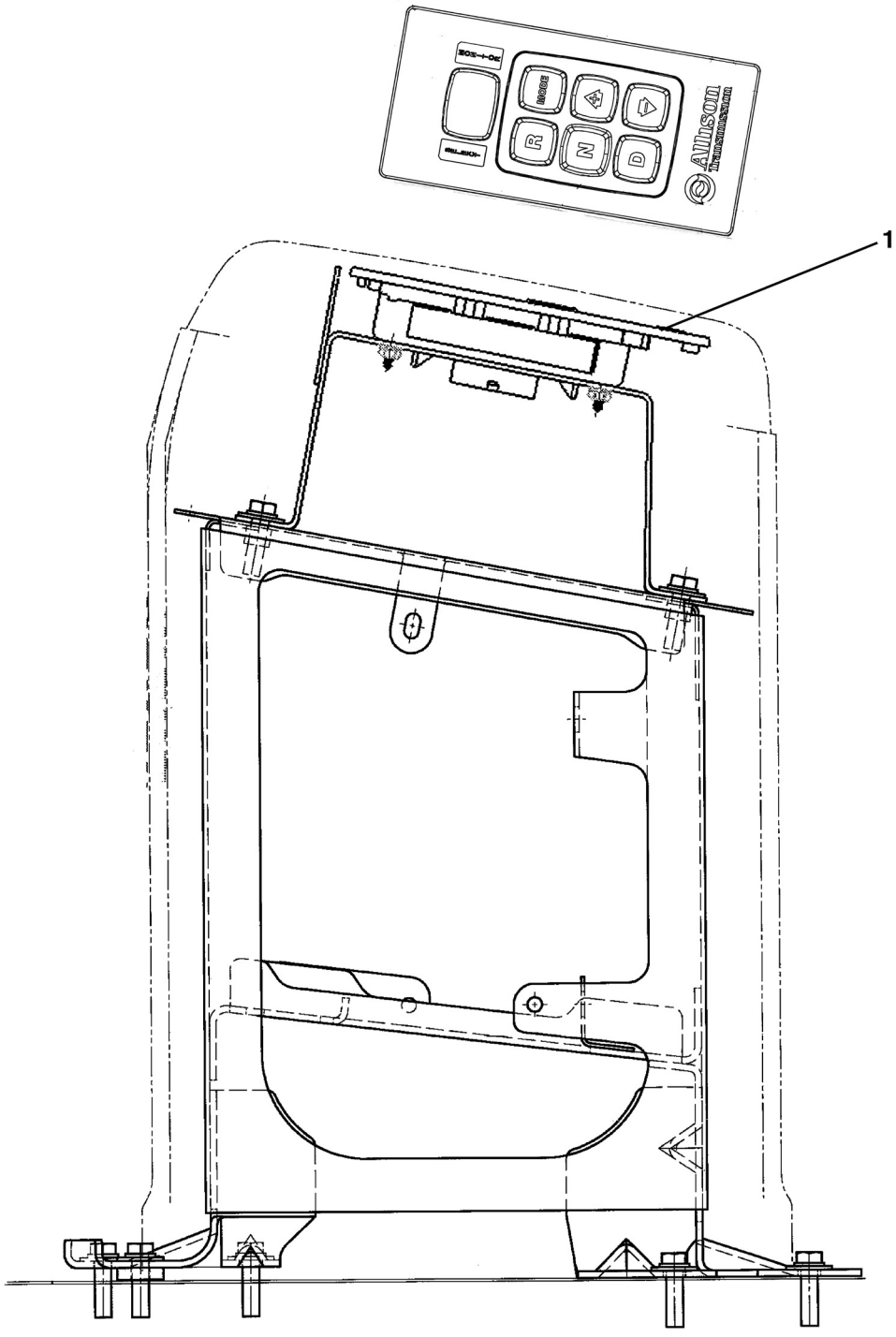


SAPH03Z030600002

| | |
|---|---|
| **1 Selector assembly** | |

# OVERHAUL

EN03Z0306H200001

## IMPORTANT POINT - ASSEMBLY

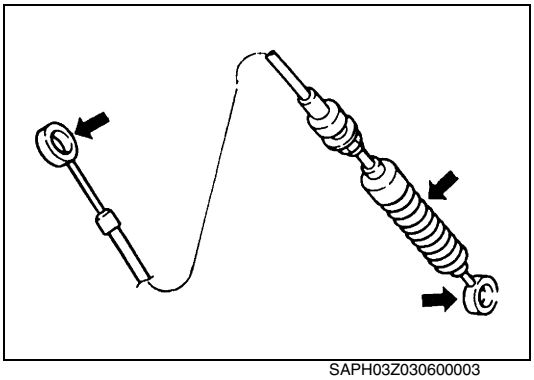

SAPH03Z030600003

**1. AUTOMATIC TRANSMISSION CONTROL**
**[Allison 2200RDS, 2200HS, 2500RDS, 2500HS MODEL]**

(1) Before installation the cable, check the shift cable for wear and damage, if necessary, replace the parts.

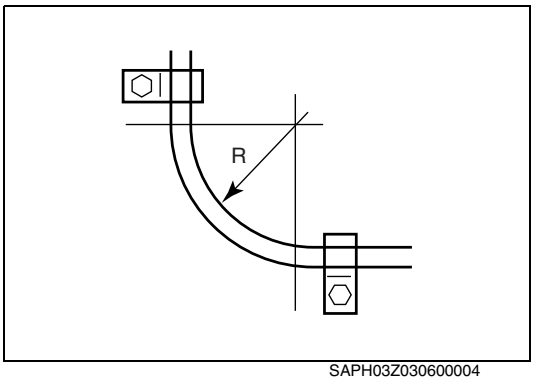


SAPH03Z030600004

(2) When you install the shift cable, it should not bent sharply. Any looping should have a radius of more than 150 mm (5.91 in.).

# PROPELLER SHAFT (SPL 100, 140)

PP02-001

**PROPELLER SHAFT ASSEMBLY ..... PP02-2**
DATA AND SPECIFICATIONS ..... PP02-2
DESCRIPTION ..... PP02-2
TROUBLESHOOTING ..... PP02-3
COMPONENT LOCATOR ..... PP02-3
OVERHAUL ..... PP02-5

# PROPELLER SHAFT ASSEMBLY

## DATA AND SPECIFICATIONS

EN04Z0802I200001

| | |
|---|---|
| **Manufacturer** | **Spicer** |
| **Type** | **Tubular shaft type** |
| **Universal joint** | **All metal, round bearing type with needle roller bearing** |

## DESCRIPTION

EN04Z0802C100001

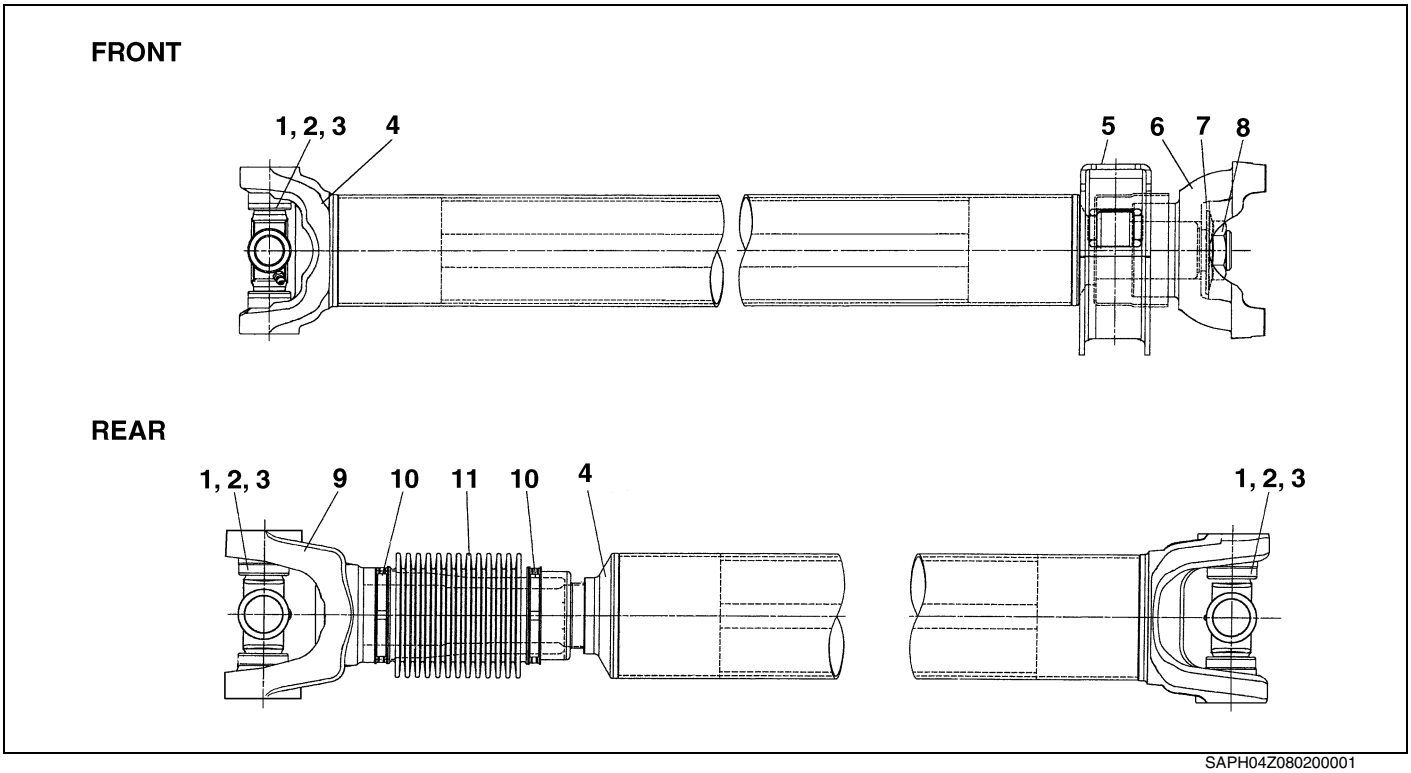


SAPH04Z080200001

| | | | |
|---|---|---|---|
| 1 | Bearing assembly | 7 | Washer |
| 2 | Cross assembly | 8 | Nut |
| 3 | Snap ring | 9 | Slip yoke assembly |
| 4 | Yoke shaft assembly | 10 | Clamp |
| 5 | Center bearing assembly | 11 | Boot |
| 6 | End yoke | | |

# TROUBLESHOOTING

EN04Z0802F300001

| Symptom | Possible cause | Remedy/Prevention |
|---|---|---|
| **Abnormal vibration when driving.** | Looseness of universal joint yoke and flange tightening nuts. | Tighten the nuts. |
| | Looseness of universal joint flange lock nut. | Replace the lock nut with new one, then tighten the lock nut with specified torque and caulk the nut securely. |
| | Excessively bent propeller shaft. | Replace the shaft. |
| | Worn or damaged universal joint. | Replace the universal joint. |
| | Worn or damaged center bearing. | Replace the bearing. |
| | Worn or damaged center bearing rubber cushion. | Replace the rubber cushion. |
| | Incorrect phasing of the yokes. | Match the phasing arrows correctly. |

# COMPONENT LOCATOR

EN04Z0802D100001

**SPL 100**

**FOR Eaton FS5406 MANUAL TRANSMISSION**
**AND ALLISON 2200HS/ 2200RDS/2500RDS AUTOMATIC TRANSMISSION**

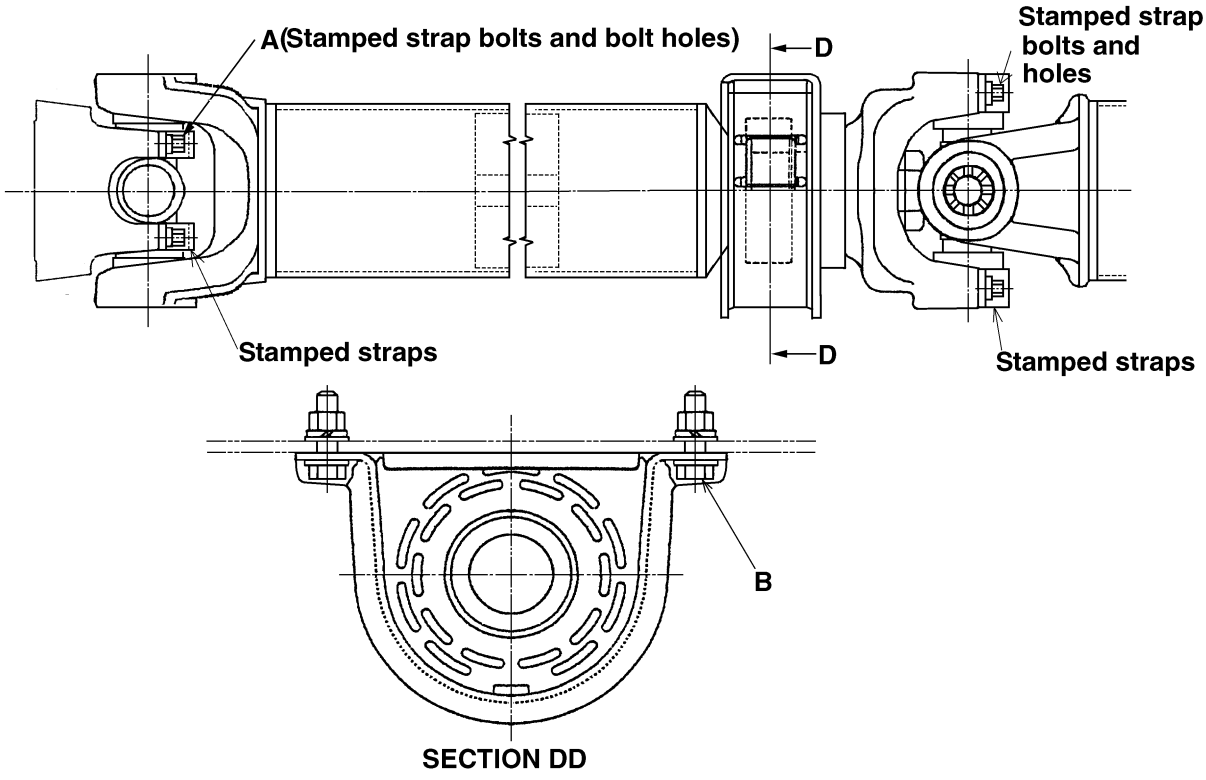


SAPH04Z080200002

**Tightening torque** **Unit: N·m {kgf·cm, lbf·ft}**

| | | | |
|---|---|---|---|
| **A** | **61-81 {625-825, 45-60}** | **B** | **127.4-156.8 {1,300-1,598, 94-115}** |

**⚠ WARNING**

**Never allow grease and oil to adhere stamped straps, stamped strap bolts and bold holes. The grease and/or oil which adhere to the stamped retainer bolts, stamped straps, stamped strap bolts, damaged bearing retainers or used inferior grade bolts can cause driveline failure, which can result in separation of driveline from the vehicle. A separated driveline can result in death, serious personal injury or property damage.**

**SPL 140**

**FOR Eaton FS6406 MANUAL TRANSMISSION**
**AND ALLISON 2500RDS/3000RDS/3500RDS AUTOMATIC TRANSMISSION**

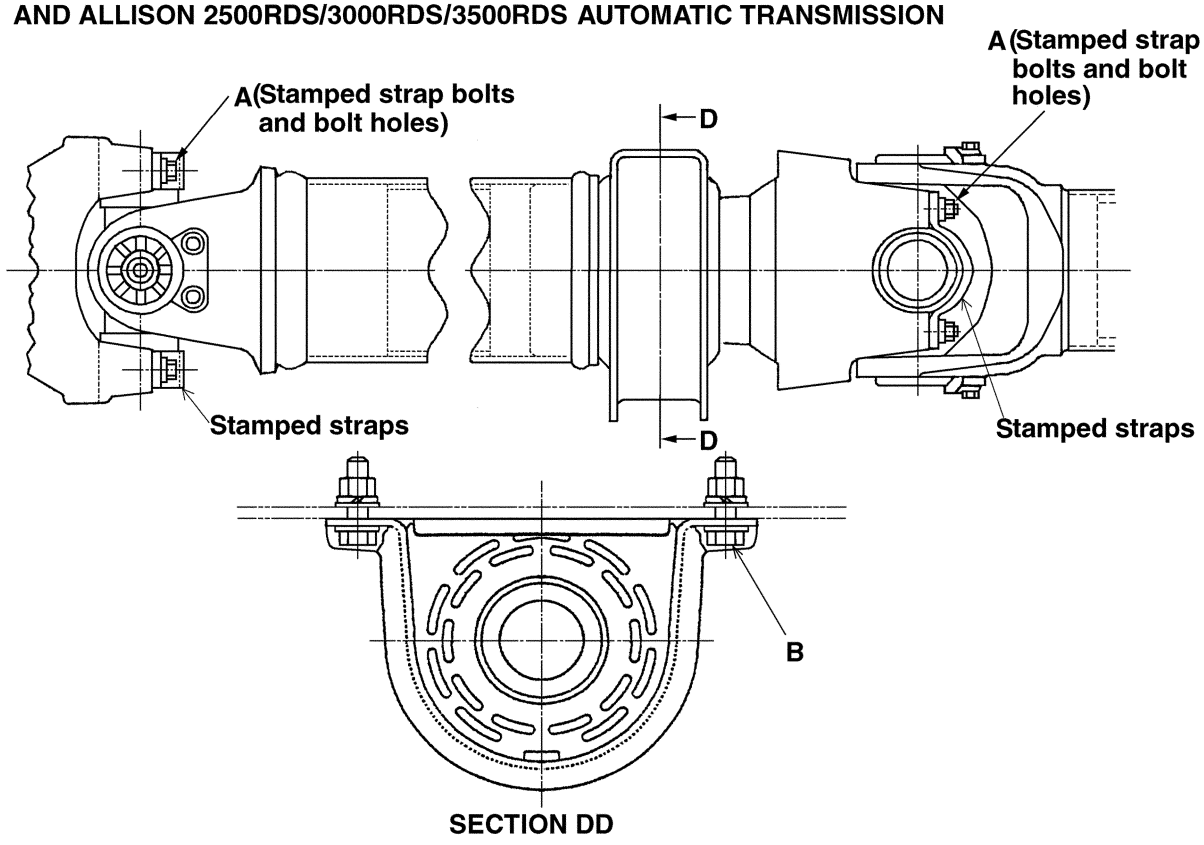


SAPH04Z080200003

**Tightening torque** **Unit: N·m {kgf·cm, lbf·ft}**

| | | | |
|---|---|---|---|
| **A** | **143-169 {1,457-1,723, 105-125}** | **B** | **127.4-156.8 {1,300-1,598, 94-115}** |

**⚠ WARNING**

**Never allow grease and oil to adhere stamped straps, stamped strap bolts and bold holes. The grease and/or oil which adhere to the stamped retainer bolts, stamped straps, stamped strap bolts, damaged bearing retainers or used inferior grade bolts can cause driveline failure, which can result in separation of driveline from the vehicle. A separated driveline can result in death, serious personal injury or property damage.**

# OVERHAUL

EN04Z0802H200001

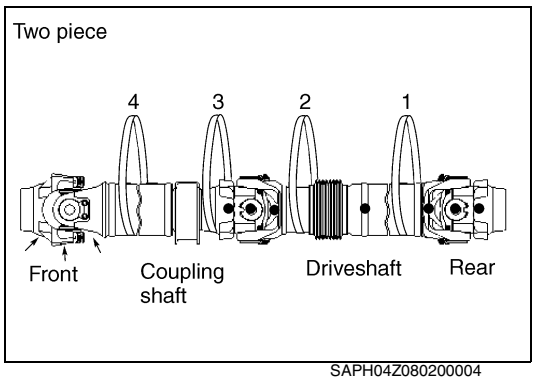


SAPH04Z080200004

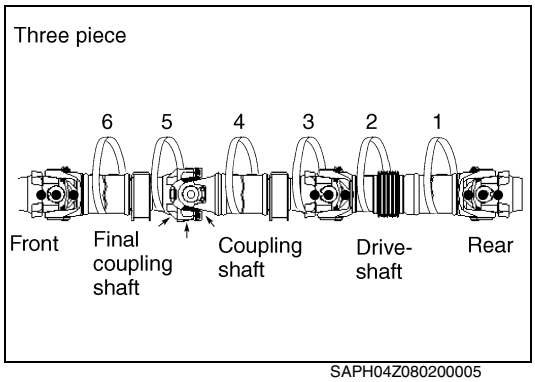


SAPH04Z080200005

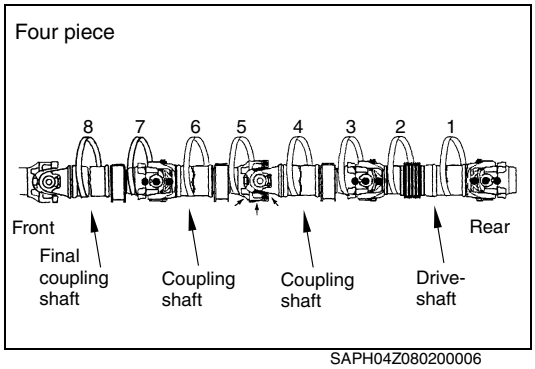


SAPH04Z080200006

## IMPORTANT POINT - DISMOUNTING

**1. DISCONNECT THE PROPELLER SHAFT FROM THE ALL CONNECTING POINTS.**

(1) Park the vehicle on level ground, apply the parking brake and apply wheel stoppers at the front or rear tires.

(2) Make aligning marks on all bearing positions, spline positions, shaft locations and all bearing retainers.

(3) Working from the rear end, support the propeller shaft with support straps as illustrated in Figure. Be sure to support the shaft assembly at the rear, at the slip member, behind the center bearing end fitting and in front of center bearing, with support straps.

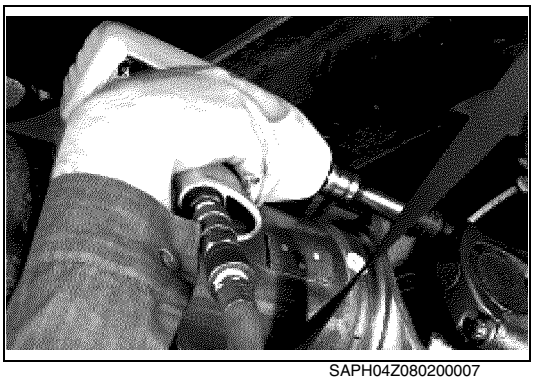
SAPH04Z080200007

(4) Remove the bearing retainers or stamped straps and bolts at rear end. Discard bolts. Discard stamped straps (if applicable).

**⚠ WARNING**

- **Bearing retainers CAN be reused if there is no damage. If damaged, replace.**
- **Stamped straps CANNOT be reused.**
- **DO NOT reuse bearing retainer bolts, stamped strap bolts.**
- **DO NOT reuse bearing retainer bolts, stamped straps, stamped strap bolts, damaged bearing retainers, or use inferior grade bolts. Reuse of bearing retainer bolts, stamped straps, stamped strap bolts, damaged bearing retainers or the use of inferior grade bolts can cause driveline failure, which can result in separation of driveline from the vehicle. A separated driveline can result in death, serious personal injury or property damage.**

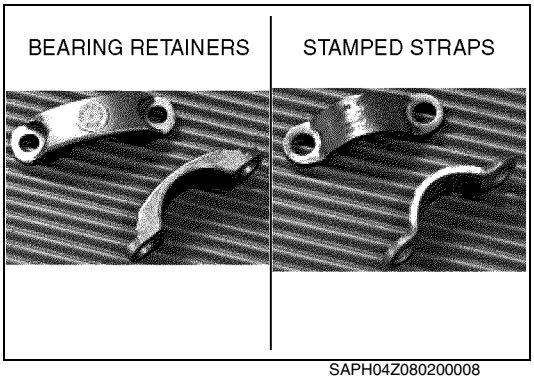

SAPH04Z080200008

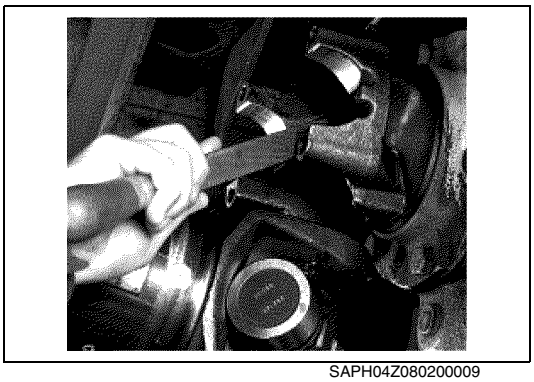
SAPH04Z080200009

(5) Inspect all end yoke cross hole surfaces and bolt hole threads for damage. If the bolt hole threads are damaged, the yoke must be replaced.
Raised metal or fretting on open yoke cross holes can be removed with a fine-toothed file and/or emery cloth.

**⚠ WARNING**

**DO NOT deform yoke cross holes by removing excessive metal. Raised metal or deformed yoke cross holes can be a cause of cross and bearing failure, which can result in separation of driveline from vehicle. A separated driveline can result in death, serious personal injury or property damage.**

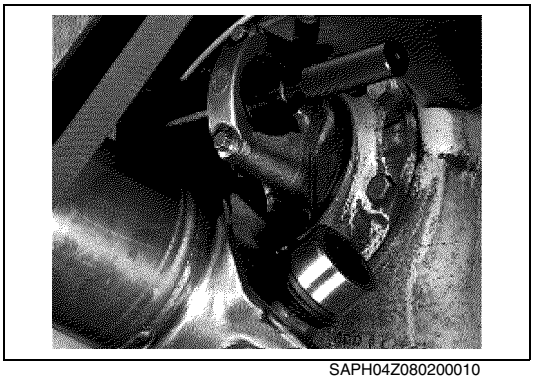
SAPH04Z080200010

(6) Inspect the end yoke cross holes for distortion using the appropriate Spicer alignment bar. Slide alignment bar through both cross holes simultaneously. If alignment bar will not pass through both cross holes simultaneously, cross holes are distorted and yoke must be replaced.

**⚠ WARNING**

**Failure to replace damaged driveline components can cause driveline failure, which can result in separation of driveline from vehicle. A separated driveline can result in death, serious personal injury or property damage.**

Refer to the Chapter transmission, parking brake or rear axle for removal procedures.

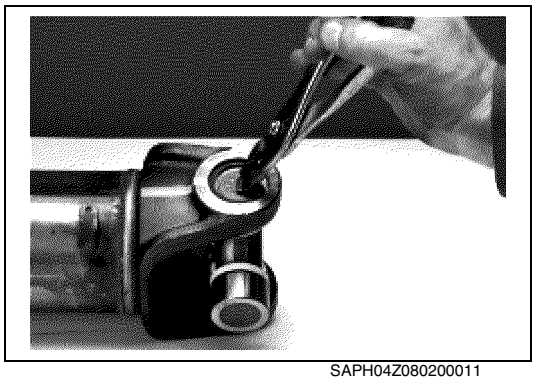
SAPH04Z080200011

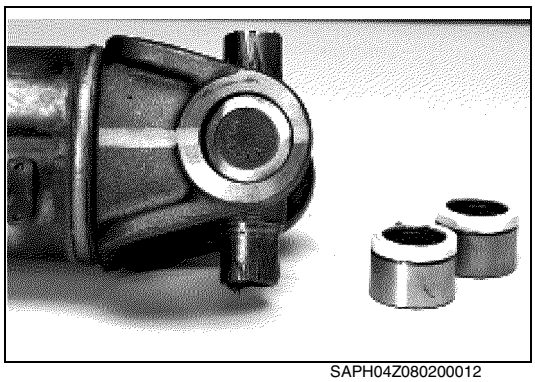
SAPH04Z080200012

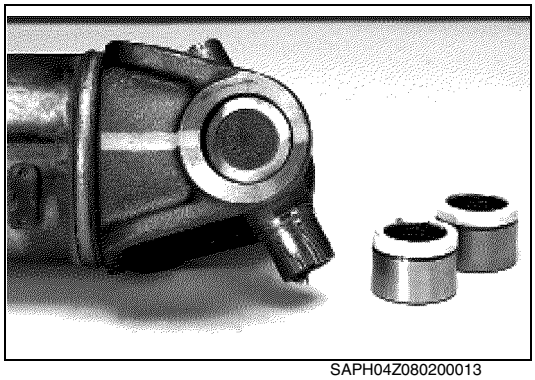
SAPH04Z080200013

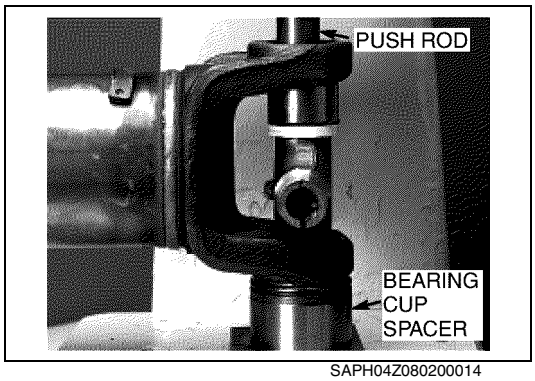

SAPH04Z080200014

## IMPORTANT POINTS - DISASSEMBLY

**1. DISASSEMBLE THE UNIVERSAL JOINT ASSEMBLY (SNAP RING STYLE).**

(1) Using snap-ring pliers, remove all snap rings. If snap rings are severely corroded or out-of-round, snap rings must be replaced.

**⚠ WARNING**

**DO NOT reuse severely corroded or out-of-round snap rings. Reuse of snap rings can cause universal joint failure and can result in separation of the driveline from the vehicle. A separated driveline can result in death, serious personal injury or property damage.**

(2) Remove the outboard bearing cup assemblies.

(3) Make sure the universal joint cross assembly is not tilted in yoke.

(4) Place bearing cup spacer onto the base of the arbor press and under the yoke. If the arbor is larger than the bearing cup diameter, a smaller diameter push rod will be needed to avoid damage to the yoke or bearing.

Using the arbor press, press down on the upper bearing cup assembly until the shoulder of the journal cross makes contact with the inside of the yoke ear. Bearing cup is not designed to drop out of yoke.

**⚠ CAUTION**

**DO NOT over press the bearing cup and journal cross. This can damage the inside of the yoke ear.**

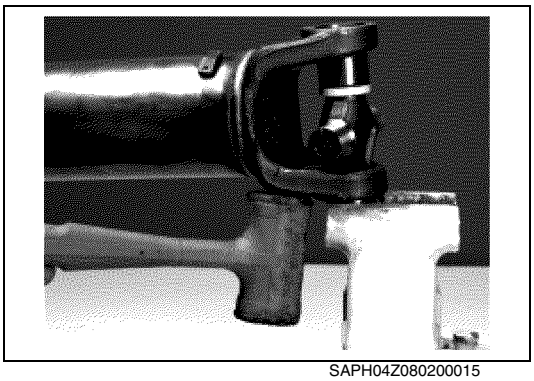

SAPH04Z080200015

(5) Grip the bearing cup in bench vise. Strike the yoke ear with a soft-faced hammer until bearing is removed.

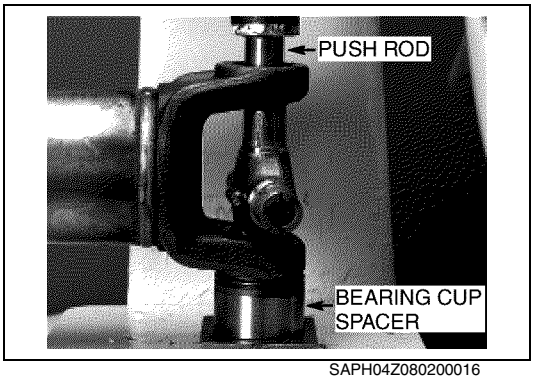


SAPH04Z080200016

(6) Place the yoke in the arbor press with remaining bearing cup face down. Using a push rod, press on the end of journal cross trunnion. Continue to press down on journal cross trunnion until the shoulder of the journal cross makes contact with the inside of yoke ear. Bearing cup is not designed to drop out of yoke. Repeat step (5).

(7) Remove journal cross from yoke.

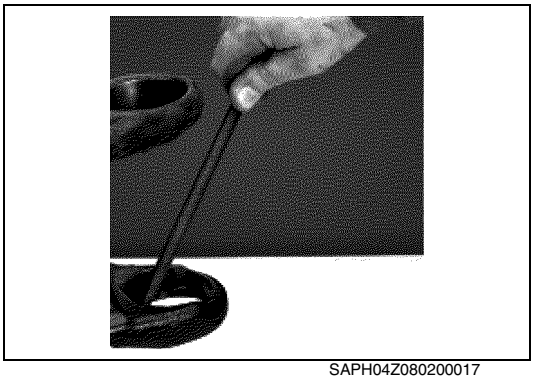

SAPH04Z080200017

(8) Inspect the tube yoke and flange yoke (if applicable) cross hole surfaces for damaged or raised metal. Raised metal or fretting can be removed from yoke cross holes with a fine-toothed file and/or emery cloth.

**⚠ WARNING**

**DO NOT deform yoke cross holes by removing excessive metal. Raised metal or deformed yoke cross holes can be a cause of cross and bearing problems and can result in separation of driveline from vehicle. A separated driveline can result in death, serious personal injury or property damage.**

(9) Inspect the yoke for distorted cross holes using the appropriate Spicer alignment bar. Slide alignment bar through both cross holes simultaneously. If alignment bar will not pass through both cross holes simultaneously, cross holes are distorted and the shaft assembly must be replaced.

**⚠ WARNING**

**Failure to replace a damaged driveline can cause driveline failure, which can result in separation of driveline from vehicle. A separated driveline can result in death, serious personal injury or property damage.**

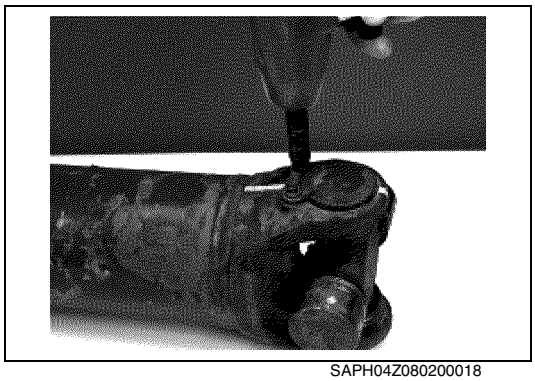
SAPH04Z080200018

**2. DISASSEMBLE THE UNIVERSAL JOINT ASSEMBLY (SPRING TAB STYLE)**

(1) Remove and discard spring tabs and bolts.

**⚠ WARNING**

**DO NOT reuse spring tabs, spring tab bolts or use inferior grade bolts. Reuse of spring tabs, spring tab bolts and use of inferior grade bolts, can cause driveline failure, which can result in separation of driveline from the vehicle. A separated driveline can result in death, serious personal injury or property damage.**

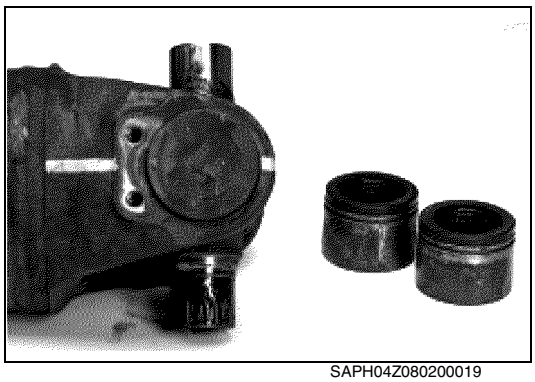
SAPH04Z080200019

(2) Remove the outboard bearing cup assemblies.


SAPH04Z080200020

(3) Make sure universal joint cross assembly is not tilted in the yoke.

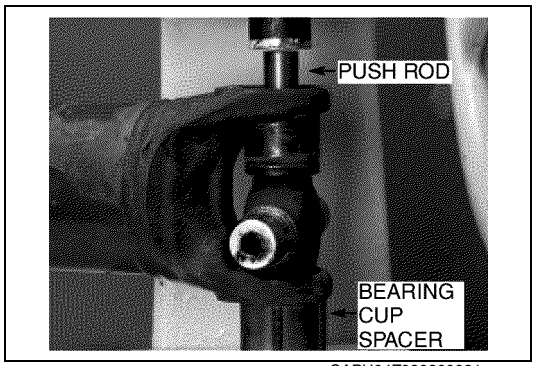

SAPH04Z080200021

(4) Place bearing cup spacer onto the base of the arbor press and under the yoke. If the arbor is larger than the bearing cup diameter, a smaller diameter push rod will be needed to avoid damaging the yoke or bearing.

Using an arbor press, press down on the upper bearing cup assembly until the shoulder of the journal cross makes contact with the inside of the yoke ear.

**⚠ CAUTION**

**DO NOT over press the bearing cup and journal cross. This can damage the inside of the yoke ear.**

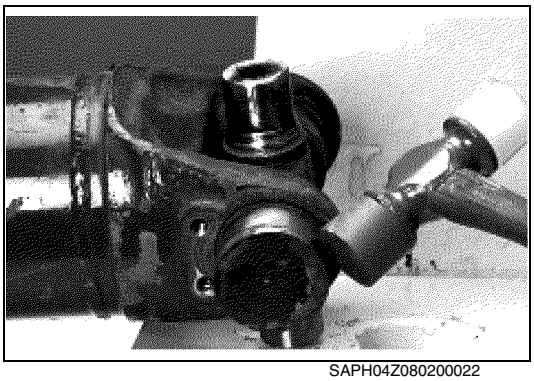
SAPH04Z080200022

(5) The bearing cup is not designed to drop out of the yoke. It will be necessary to use a soft-faced hammer to tap the partially pressed-out bearing cup from side to side, to "walk" the bearing cup out of the yoke ear.

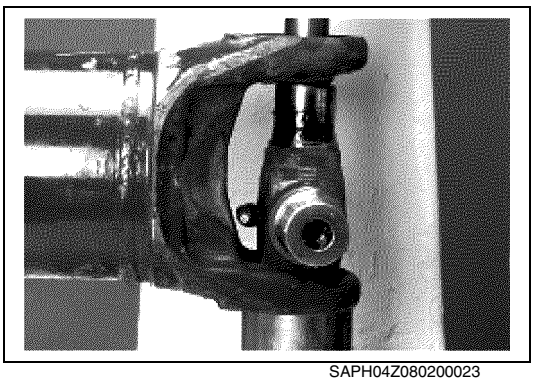
SAPH04Z080200023

(6) Place the yoke in the press, with the remaining bearing cup face down. Using a push rod, press on end of the journal cross trunnion. Continue to press down on the journal cross trunnion until the shoulder of the journal cross makes contact with the inside of the yoke ear.
(7) Repeat step (5).
(8) Remove the journal from the yoke.

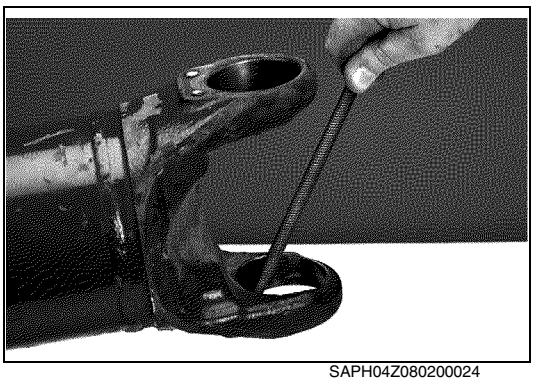
SAPH04Z080200024

(9) Inspect the tube yoke cross hole surfaces for damage or raised metal. Raised metal or fretting can be removed from yoke cross holes with a fine-toothed file and/or emery cloth.

**⚠ WARNING**
**DO NOT deform yoke cross holes by removing excessive metal. Raised metal or deformed yoke cross holes can be a cause of cross and bearing problems and can result in separation of driveline from vehicle. A separated driveline can result in death, serious personal injury or property damage.**

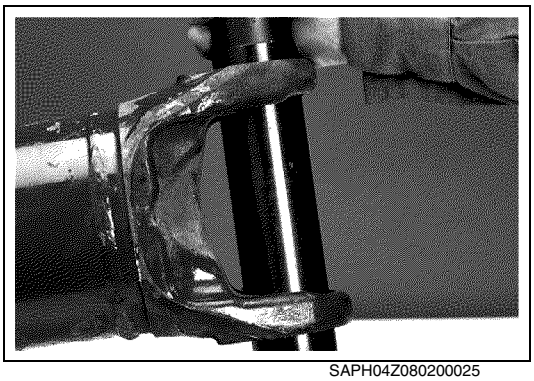
SAPH04Z080200025

(10) Inspect the tube yoke or flange yoke (if applicable) for distorted cross holes using an appropriate Spicer alignment bar. Slide alignment bar through both cross holes simultaneously. If alignment bar will not pass through both cross holes simultaneously, the cross holes are distorted and the shaft assembly must be replaced.

**⚠ WARNING**
**Failure to replace a damaged driveline can cause driveline failure, which can result in separation of driveline from vehicle. A separated driveline can result in death, serious personal injury or property damage.**

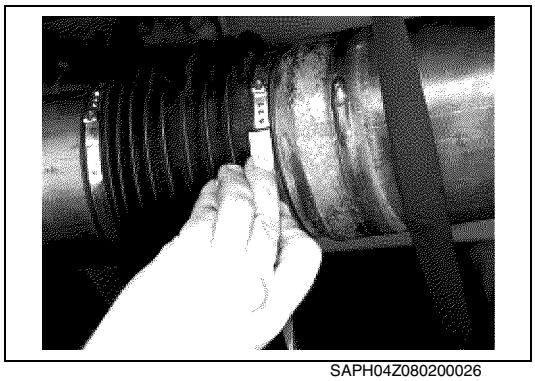
SAPH04Z080200026

### 3. REMOVE THE MEMBER BOOT

**⚠ CAUTION**
**Seal can style slip member assemblies are NOT serviceable. If seal can or seal is damaged, replacement of the complete driveshaft assembly is necessary.**

(1) Remove and discard both boot clamps. Clamps may be separated using a chisel to disengage locking hooks. DO NOT reuse clamps.

**⚠ WARNING**
- **Reuse of boot clamps could allow intrusion of contaminants into slip member and can cause driveline failure, which can result in separation of the driveline from the vehicle. A separated driveline can result in death, serious personal injury or property damage.**
- **The following step is an additional marking process to that described in step one. Be sure to mark as directed.**

(2) Completely collapse the boot toward the yoke shaft to expose weld ring and spline sleeve area. Wipe weld ring and spline sleeve areas clean.

(3) Mark spline sleeve and end of weld ring with a marking stick, paint marker or other legible marking device. This assures that the slip member can be reassembled in its original phased condition.

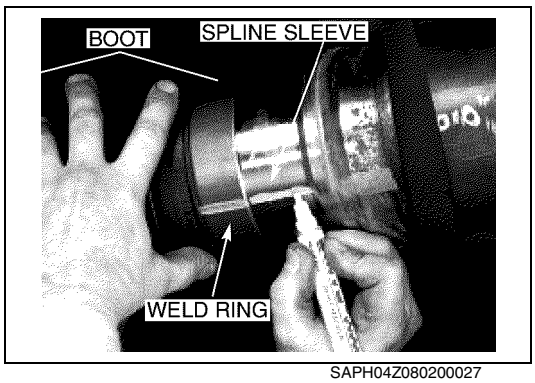

SAPH04Z080200027

**⚠ WARNING**
**Reassembly of a driveline out of original phase can cause vibration and failure of the driveline and attaching components. Failure of a driveline can result in separation of driveline from the vehicle, which can result in death, serious personal injury or property damage.**

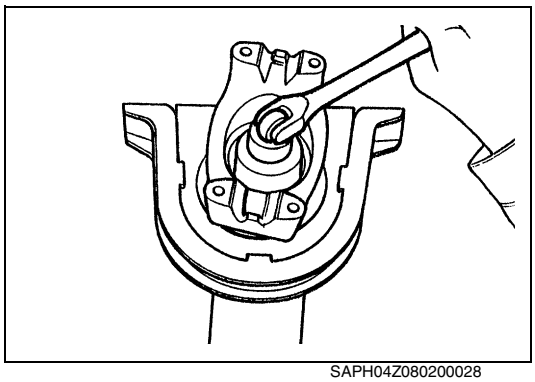
SAPH04Z080200028

### 4. REMOVE THE CENTER BEARING

(1) Remove midship nut. Reference midship nut. Discard nut. If washer is damaged, discard and replace. Otherwise, reuse washer.

**⚠ WARNING**
**DO NOT reuse midship nut. Reuse of midship nut can cause driveline failure, which can result in separation of driveline from the vehicle. A separated driveline can result in death, serious personal injury or property damage.**

**⚠ CAUTION**
**The following step (2) is an additional marking process to that described in step (1). Be sure to mark as directed.**

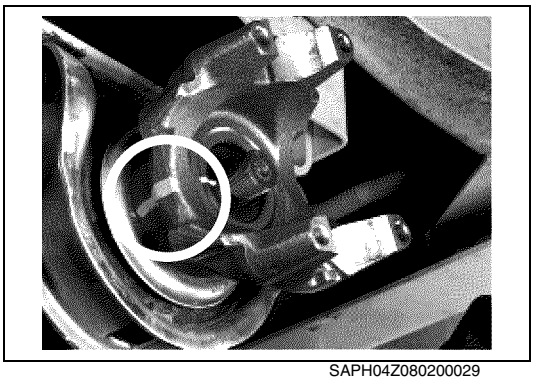
SAPH04Z080200029

(2) Mark the counterbore of end yoke to midship "nose" with marking stick, paint marker or other legible marking device. This assures proper reassembly of the center bearing end yoke in its original phased position.

**⚠ WARNING**
**Reassembly of a driveline out of original phase can cause vibration and failure of the driveline and attaching components. Failure of a driveline can result in separation of driveline from the vehicle, which can result in death, serious personal injury or property damage.**

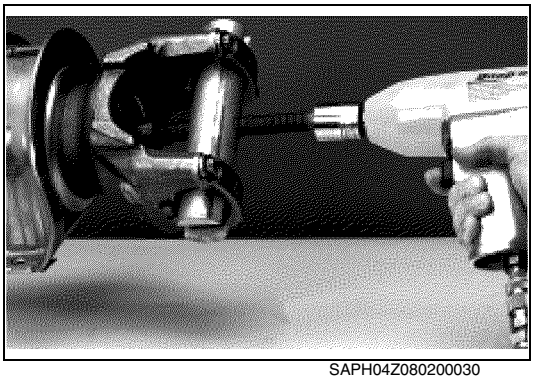
SAPH04Z080200030

(3) Using a puller, remove the yoke. The yoke has a press fit and should NOT be removed with a hammer. If the yoke is loose enough to be removed by hand, the entire coupling shaft must be replaced. Remove and discard slinger from the yoke.

**⚠ WARNING**
**Failure to replace damaged driveline components can cause driveline failure, which can result in separation of driveline from vehicle. A separated driveline can result in death, serious personal injury or property damage.**

(4) Visually inspect the splines of the center bearing end yoke. If the yoke splines are damaged, missing or twisted, the yoke must be replaced. If the yoke hub is cracked, the yoke must be replaced. See warning, step (3).
(5) Visually inspect the midship splines and threads. If the splines or threads are damaged, missing or twisted, replacement of the entire coupling shaft is necessary. See warning, step (3).
(6) Remove and discard center bearing bracket. Remove and discard rubber cushion.

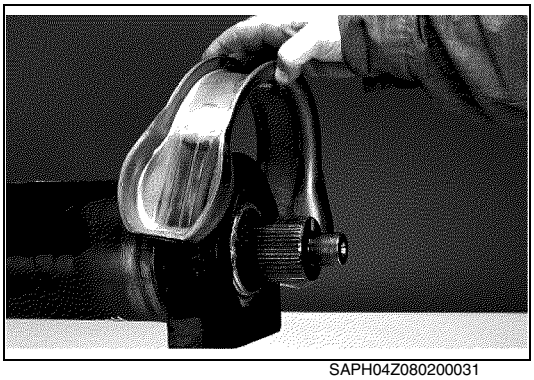
SAPH04Z080200031

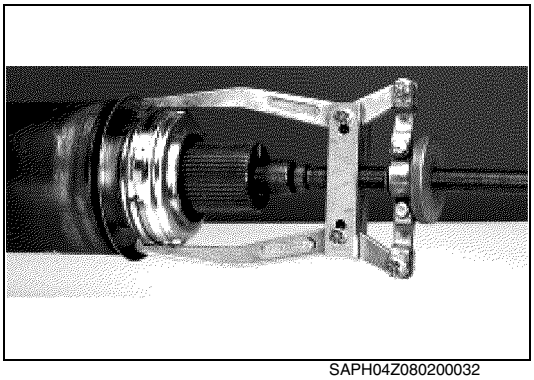
SAPH04Z080200032

(7) Use a puller to remove the bearing assembly from the midship. Discard the center bearing.

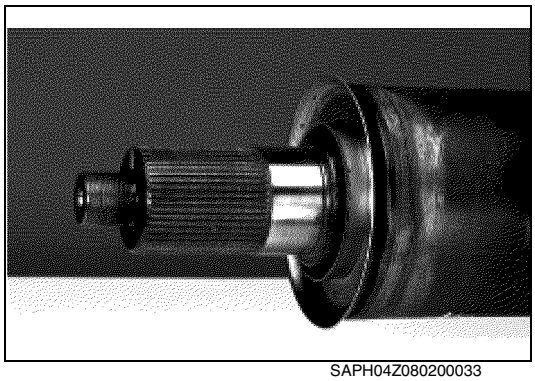
SAPH04Z080200033

(8) Inspect midship for wear on the bearing diameter. If the midship is damaged from a seized bearing, replacement of the entire coupling shaft is necessary.

**⚠ WARNING**
**Failure to replace damaged driveline components can cause driveline failure, which can result in separation of driveline from vehicle. A separated driveline can result in death, serious personal injury or property damage.**

(9) If no damage is apparent, remove slinger.

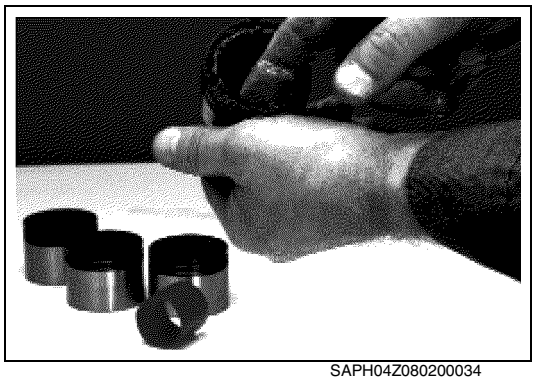
SAPH04Z080200034

## IMPORTANT POINTS - ASSEMBLY

**1. ASSEMBLE THE UNIVERSAL JOINT ASSEMBLY (SPRING TAB STYLE).**

(1) Remove needle retaining plugs from all bearing cup assemblies. Using a high-quality, N.L.G.I.*, E. P. Grade 2 lubricating grease, wipe each bearing cup assembly with grease. Fill all cavities between the needle rollers. Also apply a liberal coating of grease on the bottom of each bearing cup assembly and on the lip of the seal.
*National Lubricating Grease Institute

**⚠ WARNING**
**Inadequate lubrication can cause driveline failure, which can result in separation of the driveline from the vehicle. A separated driveline can result in death, serious personal injury or property damage.**

**⚠ CAUTION**
**DO NOT Wipe the outside of bearing cup assemblies or yoke cross holes with grease, oil or silicone-based sprays. This could cause bearing cup assembly rotation in yokes.**

**⚠ WARNING**
**Rotating bearing cup assemblies can result in yoke cross hole wear and distortion. Distorted yokes can result in separation of the driveline from the vehicle. A separated driveline can result in death, serious personal injury or property damage.**


SAPH04Z080200035

(2) Position the journal cross into the yoke cross holes with the grease zerk (nipple) fitting inward toward tubing. The double-headed, grease zerk (nipple) fitting should be perpendicular to the yoke cross holes. Failure to properly position the universal joint will result in the inability to grease the universal joint. See warning, step (1), regarding inadequate lubrication.

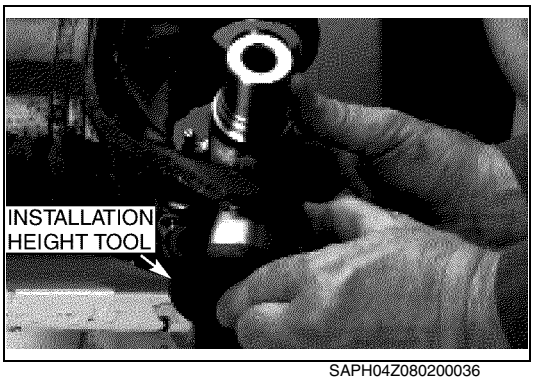

SAPH04Z080200036

(3) Move one end of the journal cross to cause a trunnion to project through the cross hole beyond the outer machined face of the yoke ear. Take one bearing cup assembly and position an installation height tool on the end of the bearing cup assembly. Place the bearing cup assembly over the protruding trunnion diameter and align it to the yoke cross hole.

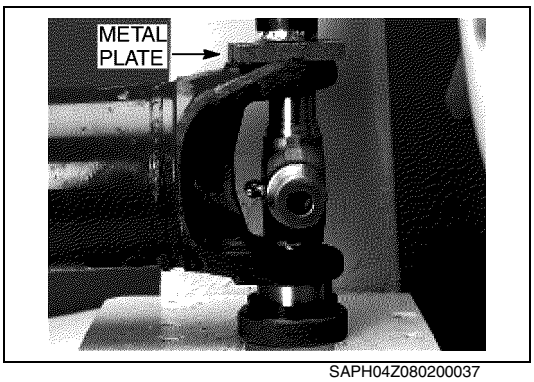

SAPH04Z080200037

(4) Align the yoke in an arbor press with the bearing assembly resting on the base of the press. (See photo 109, left.) Cover the yoke ear with a metal plate that has 0.25 inch (6.4 mm) minimum thickness. Push the yoke onto the bearing cup assembly until the installation height tool is flush with the cross hole face. Do not remove the installation height tool.

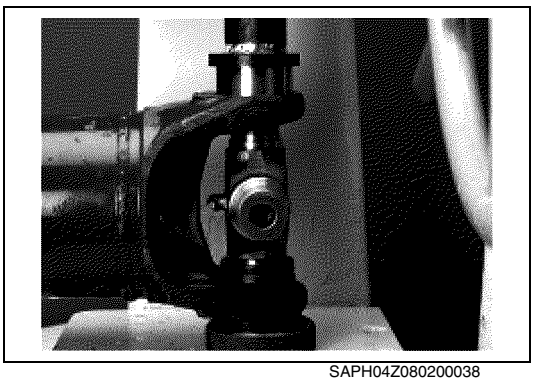
SAPH04Z080200038

(5) Flip yoke 180 degrees. Position the remaining installation height tool on the end of another bearing cup assembly. Place bearing cup assembly over trunnion diameter and align it to the yoke cross hole. Push the bearing cup assembly until both installation height tools are flush with the cross hole face. Remove and discard both installation height tools.

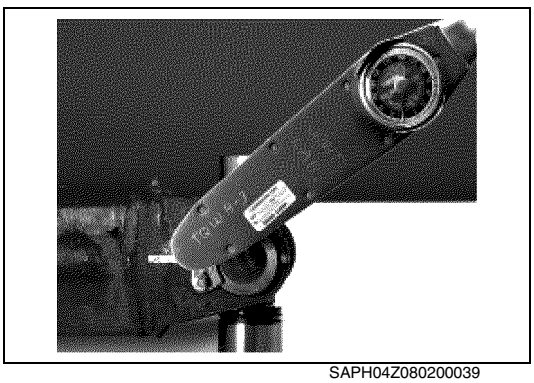
SAPH04Z080200039

(6) Install new spring tabs and 8 mm thread bolts. Make sure that no grease or foreign material is present between the contact areas of the spring tabs, bearing cups and yoke cross hole faces. Tighten bolts to the required torque. See spring tab bolt torque specification Table below.

| SPRING TAB BOLT SPECIFICATIONS | | | | | |
|---|---|---|---|---|---|
| SERIES | THREAD SIZE | HEAD SIZE | BOLT TORQUE | | KIT P/N* |
| | | | N·m | LB. FT. | |
| SPL140 | 8 mm x 1.00 | 8 mm, 6 point | 35-40 | 25-30 | 211941X |
| * Bolts are specially heat-treated. DO NOT substitute inferior grade bolts. | | | | | |

**⚠ WARNING**

**Reuse of spring tabs or spring tab bolts or failure to properly tighten spring tab bolts to required specifications can cause the driveline to loosen and separate from the vehicle. A separated driveline can result in death, serious personal injury or property damage.**

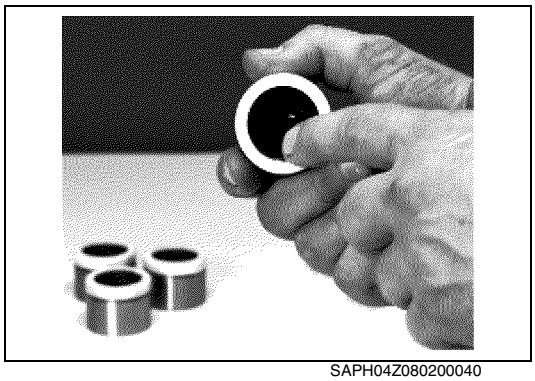
SAPH04Z080200040

**2. ASSEMBLE THE UNIVERSAL JOINT ASSEMBLY (SNAP RING STYLE).**

(1) Using a high quality N.L.G.I.*, E. P. Grade 2 lubricating grease, wipe each bearing cup assembly with grease. Fill all cavities between the needle rollers. Also apply a liberal coating of grease on the bottom of each bearing cup assembly and on the lip of the seal.
*National Lubricating Grease Institute

**⚠ WARNING**
**Inadequate lubrication can cause driveline failure, which can result in separation of the driveline from the vehicle. A separated driveline can result in death, serious personal injury or property damage.**

**⚠ CAUTION**
**DO NOT Wipe the outside of bearing cup assemblies or yoke cross holes with grease, oil or silicone-based sprays. This could cause bearing cup assembly rotation in yokes.**

**⚠ WARNING**
**Rotating bearing cup assemblies can result in yoke cross hole wear and distortion. Distorted yokes can result in separation of the driveline from the vehicle. A separated driveline can result in death, serious personal injury or property damage.**


SAPH04Z080200041

(2) Position the journal cross into the yoke cross holes with grease zerk (nipple) fitting inward toward tubing. The double-headed, grease zerk (nipple) fitting should be perpendicular to the yoke cross holes.
Failure to properly position the universal joint kit will result in the inability to grease the universal joint. See warning step (1), regarding inadequate lubrication.

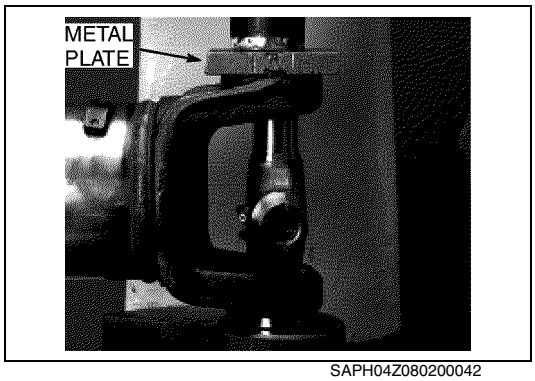

SAPH04Z080200042

(3) Move one end of the journal cross to cause a trunnion to project through the cross hole beyond the outer machined face of the yoke ear. Place the bearing cup assembly over the protruding trunnion diameter and align it to the yoke cross hole.
Align the yoke in an arbor press with the bearing assembly resting on the base of the press. Cover the yoke ear with a metal plate that has 0.25 inch (6.4 mm) minimum thickness. Push the yoke onto the bearing cup assembly until it is flush with the cross hole face.

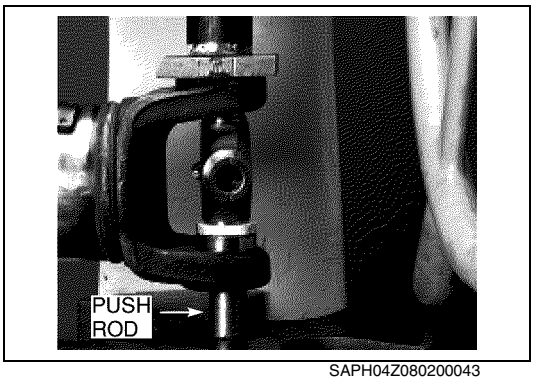

SAPH04Z080200043

(4) Place a push rod that is smaller than the diameter of the bearing cup assembly under the bearing cup assembly and continue pressing into the yoke cross hole until it is far enough to install a snap ring.
(5) Remove yoke from arbor press. Install a snap ring using snap ring pliers.

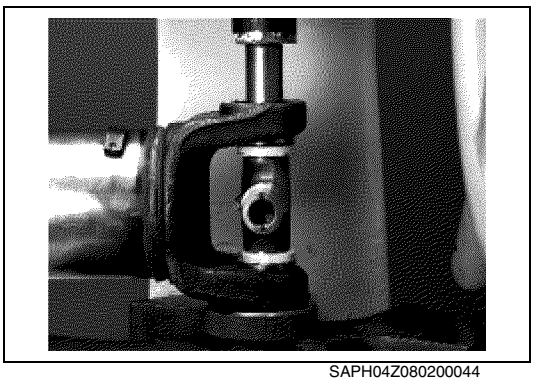
SAPH04Z080200044

(6) Flip yoke 180 degrees. Place another bearing cup assembly over trunnion diameter and align it to yoke cross hole. Align yoke in arbor press with previously installed bearing cup assembly resting on base of press. Place a push rod that is smaller than the bearing cup assembly on top of the bearing cup assembly. Press bearing cup assembly into the yoke cross hole until far enough to install a snap ring.
(7) Remove yoke from arbor press. Install a snap ring using snap ring pliers.


SAPH04Z080200045

(8) Seat the snap rings into grooves using a small chisel or punch. Companion flange style proceed to step (9). Without flange style proceed to (18).
(9) Position flange yoke cross holes over remaining trunnions.
(10) Place a bearing cup assembly over a protruding trunnion diameter and align it to the flange yoke cross hole.
(11) Align the yoke in an arbor press with the bearing assembly resting on the base of the press. Cover the yoke ear with a metal plate that has 0.25 inch (6.4 mm) minimum thickness. Push the yoke onto the bearing cup assembly until it is flush with the cross hole face.
(12) Place a push rod that is smaller than the diameter of the bearing cup assembly under the bearing cup assembly and continue pressing into the flange yoke cross hole until it is far enough to install a snap ring.
(13) Remove yoke from arbor press. Install a snap ring using snap ring pliers.
(14) Flip yoke 180 degrees. Place remaining bearing cup assembly over trunnion diameter and align it to flange yoke cross hole. Align yoke in arbor press with previously installed bearing cup assembly resting on base of press. Place a push rod that is smaller than the bearing cup assembly on top of the bearing cup assembly. Press bearing cup assembly into the yoke cross hole until it is far enough to install a snap ring.
(15) Remove yoke from arbor press. Install a snap ring using snap ring pliers.
(16) Seat the snap rings into grooves using a small chisel or punch.

(17) Flex the journal cross to make sure it moves freely in bearings. If the joint is stiff, place a plate on the yoke ear and hit the plate with a hammer to seat the bearing cup assemblies.

**⚠ WARNING**
**When using hammer, TO PREVENT eye injury, always wear safety glasses when performing maintenance or service. Failure to wear safety glasses could result in death, serious personal injury or property damage.**

(18) Flex the journal cross to make sure it moves smoothly and freely in bearings. If not, disassemble and inspect the journal and bearing assemblies for skewed or dropped needle rollers. Reference removal procedures for universal joints, snap ring style.

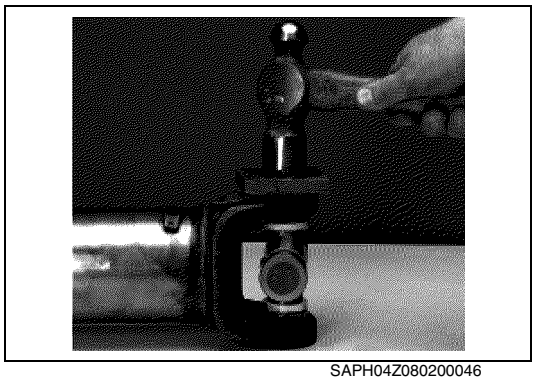
SAPH04Z080200046

**3. INSTALL THE SLIP MEMBER BOOT.**

(1) Clean ALL grease from yoke shaft and spline sleeve. Make sure grease-cutting solvent does not intrude into the tube through the vent hole in the spline sleeve plug. Be sure the phasing marks made during disassembly are not removed.


SAPH04Z080200047

(2) After all traces of grease-cutting solvent have been removed from yoke shaft and spline sleeve, apply enough N.L.G.I*, E. P. Grade 2 grease (provided in slip member boot replacement kit) to fill the entire length of all teeth in the spline sleeve. Wipe any excess grease on the teeth of the yoke shaft.
*National Lubricating Grease Institute


SAPH04Z080200048

**⚠ WARNING**
**Inadequate lubrication can cause driveline failure, which can result in separation of the driveline from the vehicle. A separated driveline can result in death, serious personal injury or property damage.**



SAPH04Z080200049

(3) Measure and place a mark 2.25 inches (55-60 mm) from yoke shaft shoulder with a marking stick, paint marker or other legible marking device.

(4) Position a clamp on each end of the new boot. Slide the boot onto the grease-free yoke shaft shoulder.

(5) Collapse the boot and insert the yoke shaft into the splined sleeve, making sure phasing marks are in line. Position the end of the boot at the 2.25 inches (55-60 mm) mark made on the yoke shaft shoulder and tighten boot clamps to the specified torque. Yoke shaft shoulder must be clean, dry and grease-free. See boot clamp torque specification.

| BOOT CLAMP SPECIFICATIONS | | | |
|---|---|---|---|
| SERIES | CLAMP P/N | CLAMP TORQUE | |
| | | N·m | LB. FT. |
| SPL100 | TBD | TBD | TBD |
| SPL140 | 232757 | 136-180 | 100-130 |

**⚠ WARNING**
**Failure to properly install and tighten boot clamps could allow intrusion of contaminants and can cause driveline failure, which can result in separation of the driveline from the vehicle. A separated driveline can result in death, serious personal injury or property damage.**

(6) Before the driveshaft is completely installed in the vehicle, slowly collapse and extend the driveshaft to make sure the boot clamps are stationary. If the clamps are not stationary, recheck for proper clamp torque. If clamps still are not stationary, repeat disassembly and assembly procedure. DO NOT reuse clamps.

**⚠ WARNING**
**Reuse of boot clamps or failure to properly tighten boot clamps to required specifications could allow intrusion of contaminants onto slip member and can cause driveline failure, which can result in separation of the driveline from the vehicle. A separated driveline can result in death, serious personal injury or property damage.**

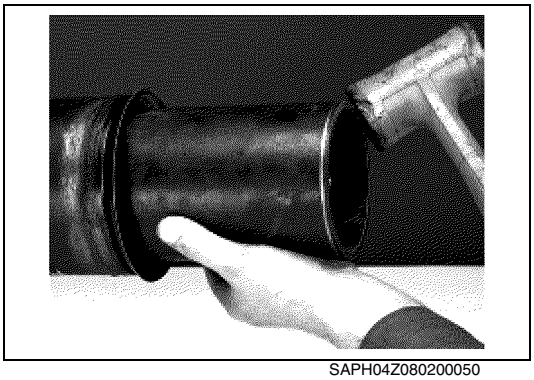
SAPH04Z080200050

**4. INSTALL THE CENTER BEARING.**

(1) Wipe the bearing surface of the midship tube shaft with a fine emery cloth.

(2) Install a new slinger (included in center bearing replacement kit) on the midship tube shaft using a section of tubing to avoid damaging slinger. Make sure the slinger is completely seated against the midship tube shaft shoulder.

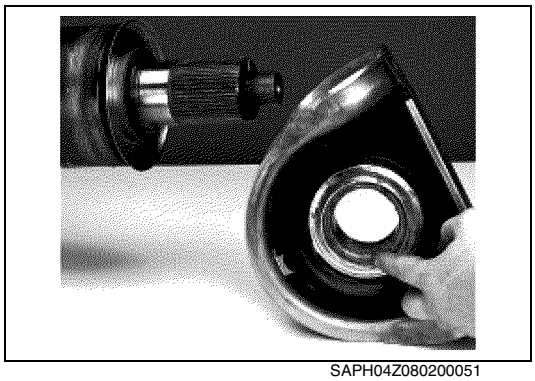
SAPH04Z080200051

(3) Before installing the new center bearing assembly, be sure to fill the entire cavity around the bearing with waterproof lubricant. (See photo 131, above.) Enough lubricant must be applied to fill the cavity to the extreme edge of the slinger surrounding the bearing. Lubricants must be water proof. See Table, below for recommended lubricants.

**⚠ WARNING**
**Inadequate lubrication can cause driveline failure, which can result in separation of the driveline from the vehicle. A separated driveline can result in death, serious personal injury or property damage.**

| RECOMMENDED CENTER BEARING LUBRICANTS | |
|---|---|
| **LUBRICANTS** | **SOURCE** |
| **Rykon Premium No. 3** | **Amoco Oil Company** |
| **Amolith 8516** | **Amoco Oil Company** |
| **Van Talgar No. 4** | **Exxon Company** |

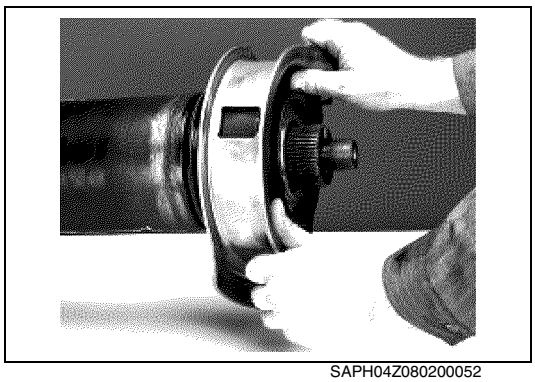
SAPH04Z080200052

(4) Carefully align the new center bearing assembly with the ground surface of the midship tube shaft. Physically push the center bearing onto the midship tube shaft.

(5) Press remaining slinger on end yoke using a section of tubing to avoid damaging slinger.

(6) Using a soft-faced hammer, tap the yoke onto midship tube shaft, making sure phasing marks from driveshaft removal procedure are in line. Continue to tap the yoke until it is completely seated against the center bearing.

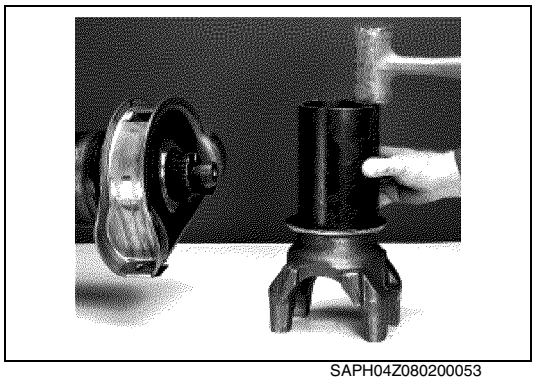
SAPH04Z080200053

(7) Install a washer (if required) and new midship nut and torque nut to specifications. See midship nut specifications, Table.

**⚠ WARNING**
**Failure to torque midship nut to required specifications can cause driveline failure, which can result in separation of the driveline from the vehicle. A separated driveline can result in death, serious personal injury or property damage.**

| MIDSHIP NUT SPECIFICATIONS | | | | | |
|---|---|---|---|---|---|
| **SERIES** | **NUT P/N** | **WASHER P/N** | **HEAD SIZE*** | **NUT TORQUE** | |
| | | | | **N·m** | **LB. FT.** |
| **SPL100** | **TBD** | **TBD** | **TBD** | **TBD** | **TBD** |
| **SPL140** | **250-74-11** | **230123-6** | **41 mm*** | **644-712** | **475-525** |
| *** A 1 5/8" socket may be used.** | | | | | |

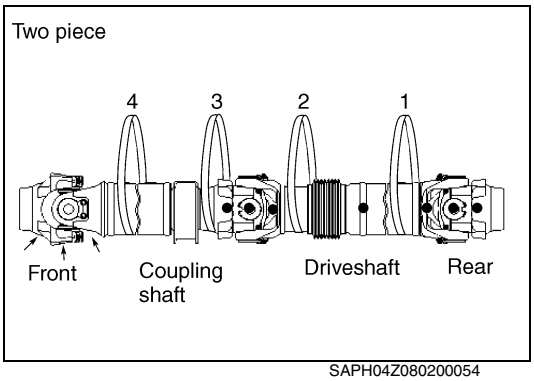


SAPH04Z080200054

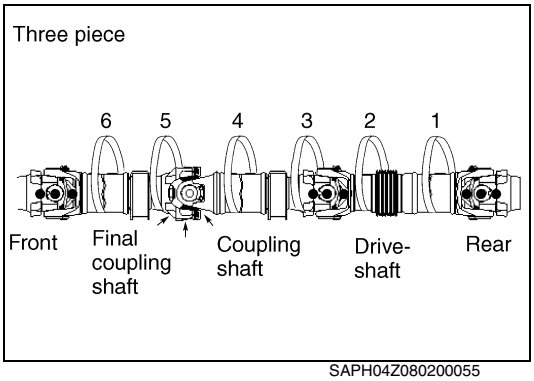


SAPH04Z080200055

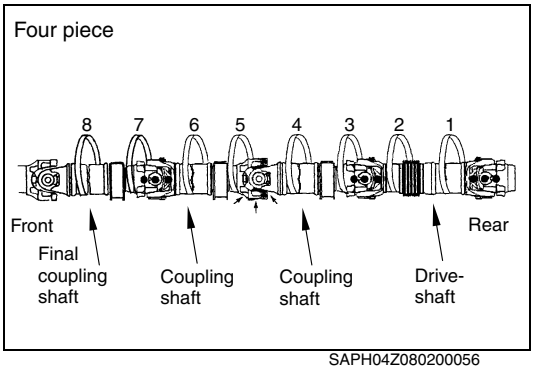


SAPH04Z080200056

## IMPORTANT POINT - MOUNTING

**1. CONNECT THE PROPELLER SHAFT TO THE ALL CONNECTING POINTS.**

(1) Position support straps to make sure that the driveshaft will be properly supported at the slip member, behind the center bearing end fittings and in front of center bearing, with support straps.

(2) Working from the front end, use a soft-faced hammer to tap the universal joint into the front end yoke. Make sure to align the universal joint in the front end yoke, matching up phasing marks made during removal to ensure the driveshaft is reinstalled in its original orientation.

(3) Install the bearing retainers or new stamped straps and new bolts. Torque the bolts down evenly and to required specifications. Check to make sure the bearing cup assemblies are fully seated in yoke ears.

**⚠ WARNING**

- **Improperly seated bearing cup assemblies can cause driveline failure, which can result in separation of the driveline from the vehicle. A separated driveline could result in death, serious personal injury or property damage.**
- **Failure to install new stamped straps and new bolts and to torque bolts to specification can cause driveline failure, which can result in separation of the driveline from the vehicle. A separated driveline can result in death, serious personal injury or property damage.**

| BOLT SPECIFICATIONS | | | | |
|---|---|---|---|---|
| SERIES | THREAD SIZE | HEAD SIZE | BOLT TORQUE | |
| | | | N·m | LB. FT. |
| SPL100 | 0.375 in. x 24UNF | 3/8 in. 12 point | 61-81 | 45-60 |
| SPL140 | 12 mm x 1.25 | 1/2 in. 12 point | 143-169 | 105-125 |
| * Bolts are specially heat-treated. DO NOT substitute inferior grade bolts. | | | | |

(4) Install proper center bearing bracket bolts.

**⚠ WARNING**

**Failure to torque bolts to specification can cause driveline failure, which can result in separation of the driveline from the vehicle. A separated driveline can result in death, serious personal injury or property damage.**

# DIFFERENTIAL CARRIER (MERITOR RS17.19.21&23)

DF02-001

**DIFFERENTIAL CARRIER ASSEMBLY ... DF02-2**

DATA AND SPECIFICATIONS ..... DF02-2
DESCRIPTION ..... DF02-4
TROUBLESHOOTING ..... DF02-7
SPECIAL TOOL ..... DF02-8
COMPONENT LOCATOR ..... DF02-10
OVERHAUL ..... DF02-14
INSPECTION AND REPAIR ..... DF02-54

**DRIVER-CONTROLLED MAIN DIFFERENTIAL LOCK ..... DF02-63**

OVERHAUL ..... DF02-63
INSPECTION AND REPAIR ..... DF02-66

# DIFFERENTIAL CARRIER ASSEMBLY

## DATA AND SPECIFICATIONS

EN05Z0502I200001

| MODEL | AXLE MODEL | GEAR RATIOS | CAPACITY | |
|---|---|---|---|---|
| | | | U.S. Pints | Liters |
| HINO 238 (NE8J), HINO 258 (NE8J, NJ8J), HINO 268 (NE8J, NJ8J) | RS17-145 | 3.07, 3.90, 4.11, 4.88, 5.13, 5.29 | 33.6 | 15.9 |
| | RS19-145 | 3.73, 3.90, 4.11, 4.88, 5.13, 5.29, 5.57 | 33.2 | 15.7 |
| HINO 268 (NV8J), HINO 338 (NF8J, NV8J) | RS21-145 | 3.90, 4.11, 4.33, 4.63, 4.88, 5.13, 5.29, 5.57, 5.86, 6.14 | 32.3 | 15.3 |
| HINO 358 (NH8J) | RS23-160 | 3.91, 4.10, 4.56, 4.89, 5.38, 5.63, 6.14 | 39.5 | 18.7 |

Single-Reduction Differential Carrier

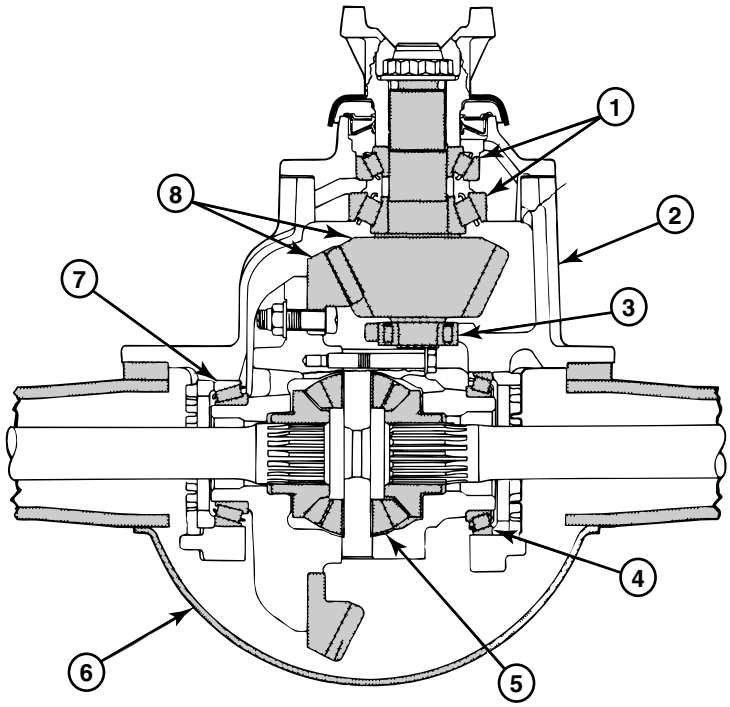


SHTS05Z050200001

| | | | |
|---|---|---|---|
| 1 | TAPERED ROLLER BEARINGS | 5 | BEVEL DIFFERENTIAL GEARS |
| 2 | CARRIER | 6 | HOUSING |
| 3 | STRAIGHT ROLLER BEARING | 7 | TAPERED ROLLER BEARING |
| 4 | TAPERED ROLLER BEARING | 8 | HYPOID DRIVE PINION AND RING GEAR |

Single-Reduction Differential carrier with Differential Lock

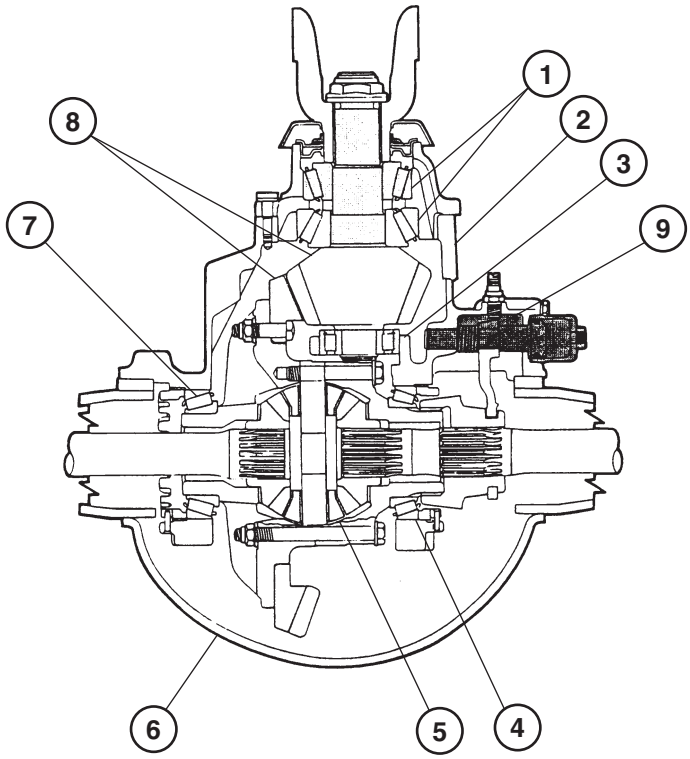


SHTS05Z050200002

| | | | |
|---|---|---|---|
| 1 | TAPERED ROLLER BEARINGS | 6 | HOUSING |
| 2 | CARRIER | 7 | TAPERED ROLLER BEARING |
| 3 | STRAIGHT ROLLER BEARING | 8 | HYPOID DRIVE PINION AND RING GEAR |
| 4 | TAPERED ROLLER BEARING | 9 | DIFFERENTIAL LOCK ASSEMBLY |
| 5 | BEVEL DIFFERENTIAL GEARS | | |

# DESCRIPTION

EN05Z0502D100001

Single-Reduction Differential Carrier

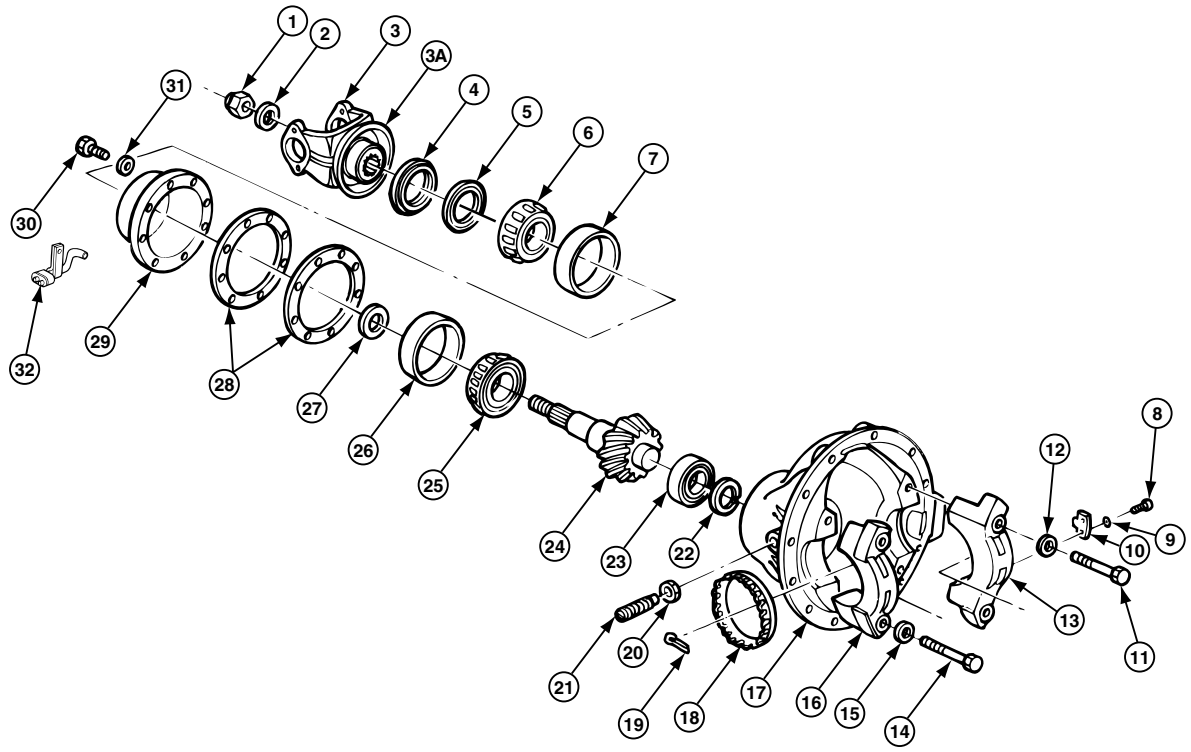


SHTS05Z050200003

| | | | |
|---|---|---|---|
| 1 | Nut —Drive Pinion* | 17 | Carrier |
| 2 | Washer — Drive Pinion* | 18 | Adjusting Ring |
| 3 | Input Yoke* or Flange* | 19 | Cotter Pin — Adjusting Ring |
| 3A | Deflector | 20 | Jam Nut* — Thrust Screw* |
| 4 | POSE$^{TM}$ seal | 21 | Thrust Screw* |
| 5 | Triple Lip (Main) Seal | 22 | Snap Ring |
| 6 | Bearing Cone — Outer | 23 | Spigot Bearing |
| 7 | Bearing Cup — Inner | 24 | Drive Pinion |
| 8 | Capscrews* — Lock Plate* | 25 | Bearing Cone — Pinion Inner |
| 9 | Washers* — Lock Plate* | 26 | Bearing Cup — Pinion Inner |
| 10 | Lock Plate — Adjusting Ring | 27 | Spacer — Pinion Bearing |
| 11 | Capscrews — Differential Bearing Cap | 28 | Shims |
| 12 | Washers | 29 | Bearing Cage — Drive Pinion |
| 13 | Caps — Differential Bearing | 30 | Capscrew — Bearing Cage |
| 14 | Capscrews — Differential Bearing Cap | 31 | Washer |
| 15 | Washers | 32 | Clip and Cable Holder |
| 16 | Caps — Differential Bearing | | |

***Some Meritor carriers do not have these described parts.**

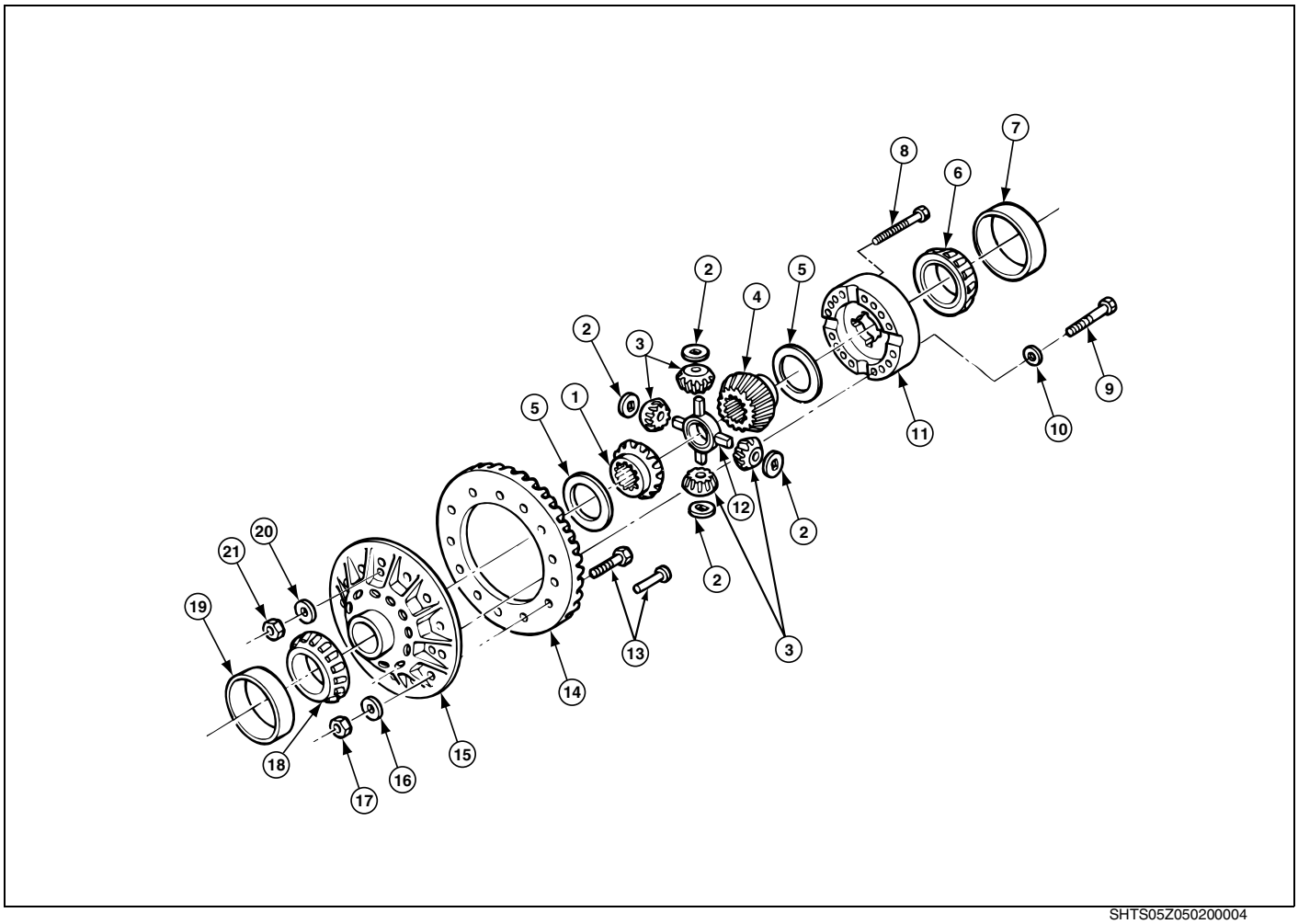


SHTS05Z050200004

| | | | |
|---|---|---|---|
| 1 | Side Gears — Differential | 12 | Spider — Differential |
| 2 | Thrust Washers — Differential Pinion | 13 | Bolts* or Rivets* — Ring Gear and Case Half |
| 3 | Pinions — Differential | 14 | Ring Gear (Pinion Drive Gear) |
| 4 | Differential — Side Gears | 15 | Case Half — Flange |
| 5 | Thrust Washers — Differential Side Gear | 16 | Washers — Case Half |
| 6 | Cone — Differential Bearing | 17 | Nuts* —Case Half |
| 7 | Cup — Differential Bearing | 18 | Bearing Cone — Differential L.H. |
| 8 | "Thru" Bolt | 19 | Bearing Cup — Differential L.H. |
| 9 | Bolts* — Differential Case | 20 | Washer for "Thru" Bolt |
| 10 | Washers — Differential Case | 21 | Nut for "Thru" Bolt |
| 11 | Case Assembly — Main Differential | | |

***Some Meritor carriers do not have these described parts.**

**Differential lock assembly**

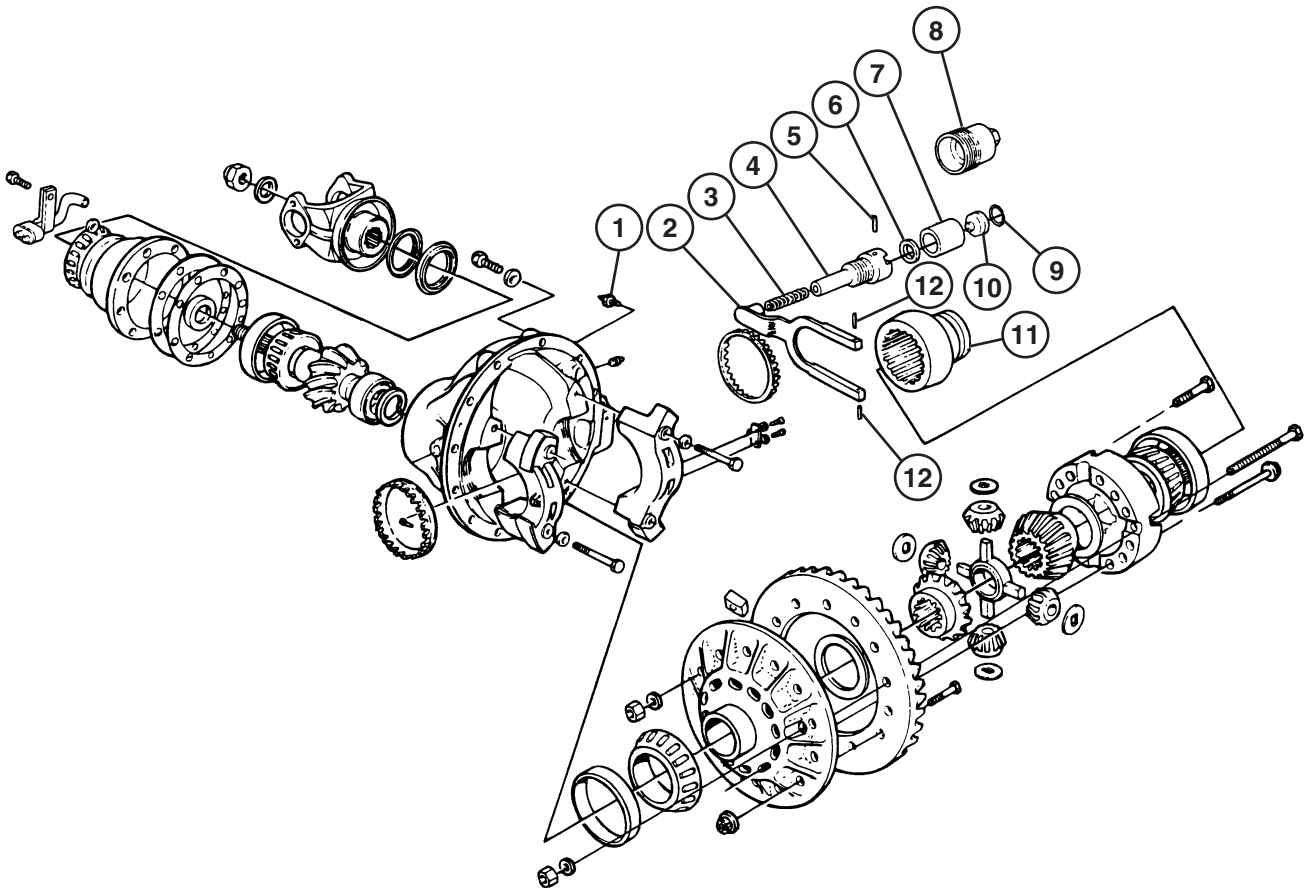


SHTS05Z050200005

| | | | |
|---|---|---|---|
| 1 | SENSOR SWITCH | 7 | AIR CYLINDER TUBE |
| 2 | SHIFT FORK | 8 | SCREW-IN DIFFERENTIAL LOCK |
| 3 | SHIFT SHAFT SPRING | 9 | PISTON O-RING |
| 4 | SHIFT SHAFT | 10 | PISTON |
| 5 | SPRING RETAINING PIN | 11 | SHIFT COLLAR |
| 6 | FLAT WASHER, OR SILASTIC AS REQUIRED | 12 | SHIFT FORK ROLL PINS |

***Some Meritor carriers do not have these described parts.**

# TROUBLESHOOTING

EN05Z0502F300001

| Symptom | Possible cause | Remedy/Prevention |
|---|---|---|
| **Abnormal noise (Bearing system)** | Worn or damaged pinion bearings | Replace bearings. |
| | Worn or damaged differential side bearings | Replace bearings. |
| | Loose pinion bearings | Adjust bearing preload. |
| | Loose differential side bearings | Adjust bearing preload. |
| **Abnormal noise (Gear system)** | Inadequate backlash on ring gear and pinion gear | Adjust backlash. |
| | Worn thrust washers | Replace. |
| | Worn differential spider | Replace. |
| | Worn or damaged ring gear and pinion | Replace. |
| | Worn or damaged differential side gear and pinion | Replace. |
| | Loose ring gear bolts | Tighten bolts. |
| | Inadequate tooth contact of ring gear and pinion gear | Replace or adjust tooth contact. |
| | Worn pinion spline | Replace. |
| **Abnormal noise (rear axle system)** | Worn rear axle shaft spline | Replace. |
| | Worn hub bearings | Replace. |
| | Loose hub bearings | Adjust bearing preload. |
| | Loose differential case tightening bolts | Tighten bolts. |
| **Abnormal noise (Oil system, etc.)** | Insufficient oil | Add oil, check for leakage. |
| | Poor oil quality | Change oil. |
| | Abnormal propeller shaft noise | Refer to chapter **"PROPELLER SHAFT"**. |

# SPECIAL TOOL

EN05Z0502K100001

Prior to starting a differential carrier overhaul, it is necessary to have these special tools.

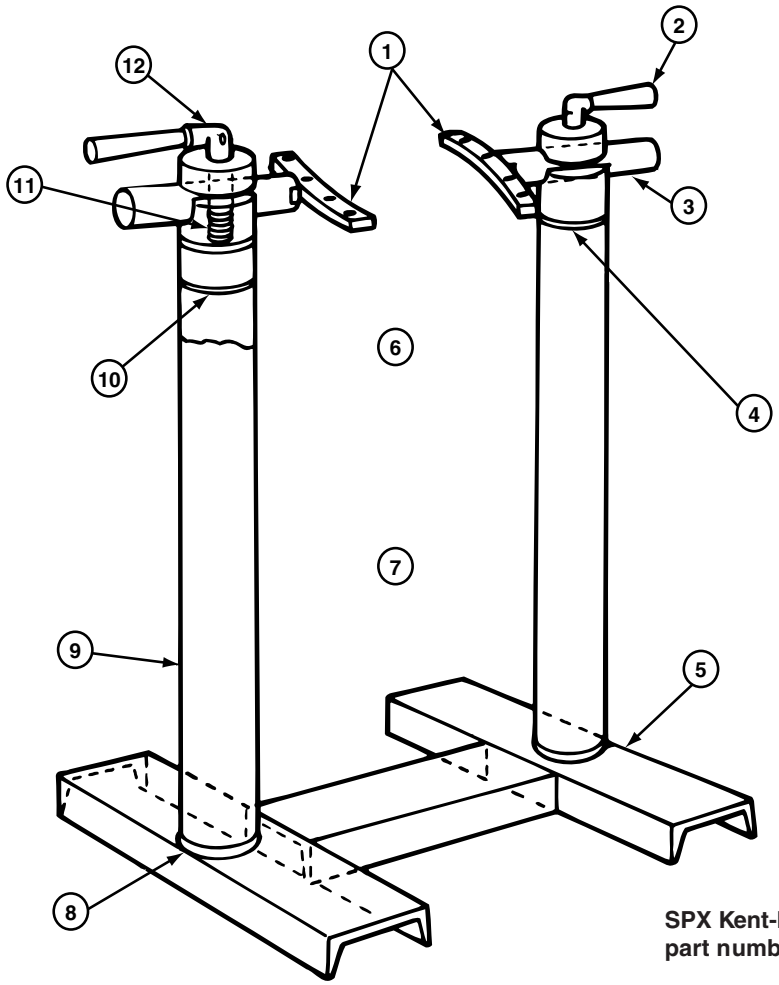


**SPX Kent-Moore part number J-3409-D**

SHTS05Z050200006

| | | | |
|---|---|---|---|
| 1 | PLATES 8' LONG X 3/4" THICK X 1-1/4" WIDE WITH A TONGUE TO FIT SLOT IN BAR WELD PLATES TO BAR | 7 | 23-1/2" CENTER TO CENTER OF PIPE |
| 2 | HANDLE 7" LONG WITH SLOT IN ONE END TO FIT CLAMP SCREW | 8 | CHAMFER END OF PIPE FOR WELDING |
| 3 | BAR 2" DIAMETER X 9" LONG WITH ONE END SLOTTED TO FIT PLATE | 9 | 4" DIAMETER PIPE |
| 4 | WELD ALL AROUND AFTER PRESSING PLUG IN PIPE | 10 | PLUG 4" DIAMETER X 7" LONG WITH ONE END TURNED 3" LONG TO FIT PIPE. DRILL 2" HOLE AND MILL 3/16" WIDE SLOT 2" FROM TOP |
| 5 | WELD | 11 | SCREW 3-1/2" LONG X 5/8" DIAMETER WITH FLATS ON END TO FIT HANDLE AND 2-1/2" LENGTH OF THREAD ON OTHER END |
| 6 | SHAPE AND SIZE OF HOLES TO FIT CARRIER | 12 | DRILL 3/8" HOLE THROUGH HANDLE AND SCREW |

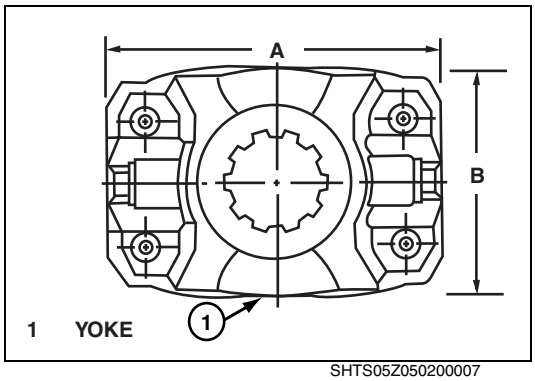


1 YOKE

SHTS05Z050200007

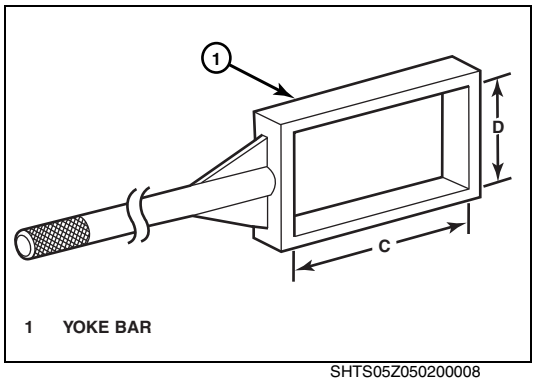


1 YOKE BAR

SHTS05Z050200008

**1. HOW TO MAKE A YOKE BAR**

(1) Measure dimensions A and B of the yoke you are servicing.

(2) Calculate dimensions C and D of the yoke bar by adding 0.125-0.250-inch to dimensions A and B of the yoke.

**⚠ WARNING**

**Wear safe clothing and eye protection when you use welding equipment. Welding equipment can burn you and cause serious personal injury. Follow the operating instructions and safety procedures recommended by the welding equipment manufacturer.**

(3) To make the box section, cut and weld 1.0-inch x 2.0-inch mild steel square stock according to dimensions C and D.

(4) Cut a 4.0-foot x 1.25-inch piece of mild steel round stock to make the yoke bar handle. Center weld this piece to the box section.

- To increase yoke bar rigidity: Weld two angle pieces onto the handle.

**2. HOW TO ORDER TOOLS AND SUPPLIES SPECIFIED IN THIS MANUAL**

Call ArvinMeritor's Commercial Vehicle Aftermarket at 888-725-9355 to order Meritor tools and supplies.

SPX Kent-Moore, 28635 Mound Road, Warren, Michigan, 48092. Call the company's customer service center at 800-345-2233, or visit their website at spxkentmoore.com.

# COMPONENT LOCATOR

EN05Z0502D100002

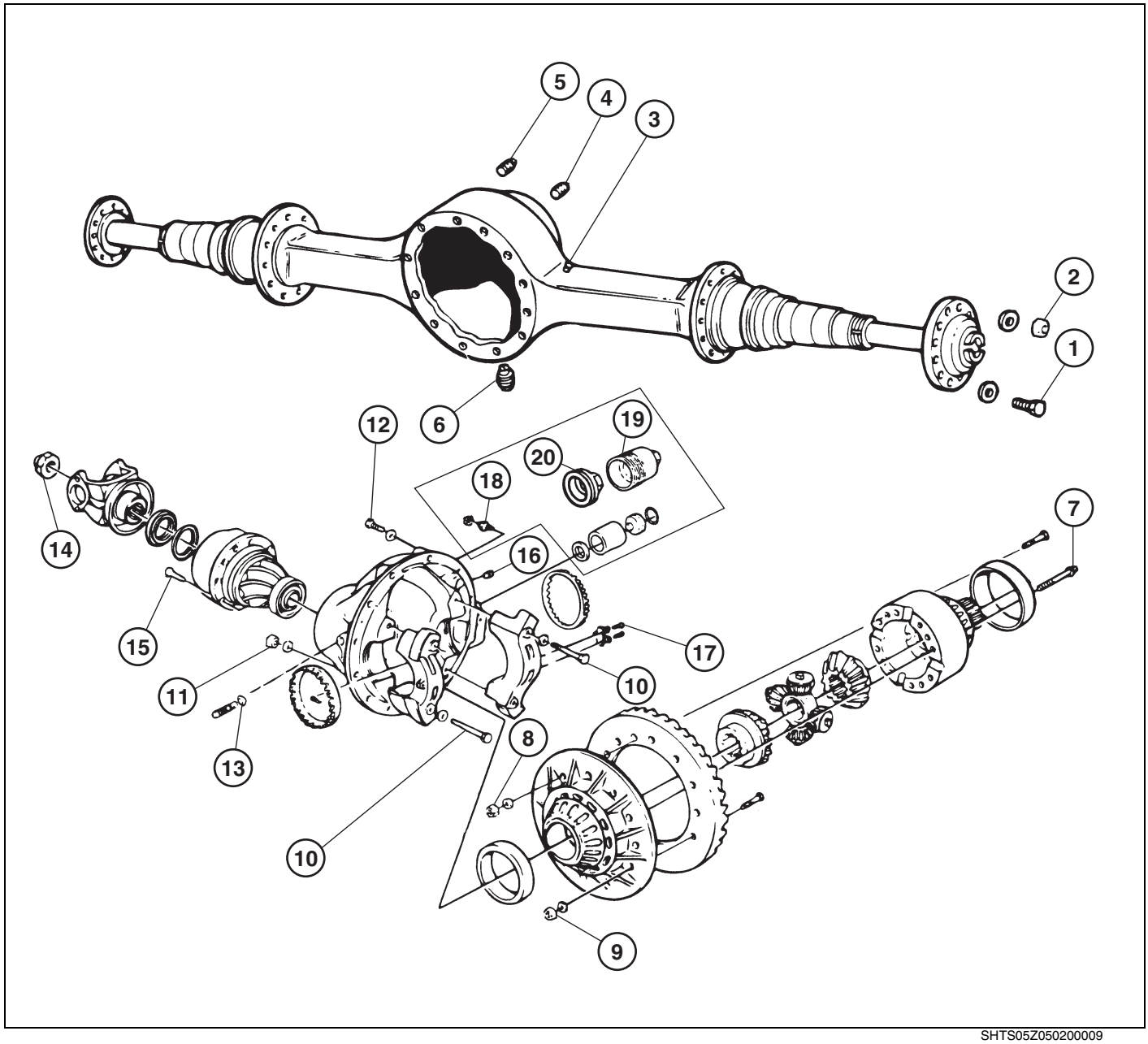


SHTS05Z050200009

| Fastener | | Thread Size | Torque Value lb-ft (N·m) | |
|---|---|---|---|---|
| 1. | Capscrew, Axle Shaft | .31-24<br>.50-13 | 18-24<br>85-115 | (24-33)<br>(115-156) |
| 2. | Nut, Axle Shaft Stud | Plain Nut<br>.44-20<br>.50-20<br>.56-18<br>.62-18<br>Lock Nut<br>.44-20<br>.50-20<br>.56-18<br>.62-18 | 50-75<br>75-115<br>110-165<br>150-230<br><br>40-65<br>65-100<br>100-145<br>130-190 | (68-102)<br>(102-156)<br>(149-224)<br>(203-312)<br><br>(54-88)<br>(88-136)<br>(136-197)<br>(176-258) |
| 3. | Breather | .38-18 | 20 minimum (27 minimum) | |
| 4. | Plug, Oil Fill, Housing | .75-14 | 35 minimum (47.5 minimum) | |
| 5. | Plug, Heat Indicator | .50-14 | 25 minimum (34 minimum) | |
| 6. | Plug, Oil Drain | .50-14 | 25 minimum (34 minimum) | |
| 7. | Capscrew, Differential Case<br><br><br><br><br>Grade 10.9 Flange Head<br>Grade 10.9 Standard Hex Head<br>Grade 12.9 Standard Hex Head<br>Grade 12.9 Flange Head<br>Grade 12.9 Standard Head | .38-16<br>.44-14<br>.50-13<br>.56-12<br>.62-11<br>M12 x 1.75<br>M12 x 1.75<br>M12 x 1.75<br>M16 x 2<br>M16 x 2 | 35-50<br>60-75<br>85-115<br>130-165<br>180-230<br>85-103<br>74-96<br>105-125<br>203-251<br>220-310 | (48-68)<br>(81-102)<br>(115-156)<br>(176-224)<br>(244-312)<br>(115-140)<br>(100-130)<br>(143-169)<br>(275-340)<br>(300-420) |
| 8. | Nut, Differential Case Bolt | .50-13<br>.50-20<br>.62-11<br>.62-18<br>M12 x 1.75<br>M16 x 2 | 75-100<br>85-115<br>150-190<br>180-230<br>74-96<br>220-310 | (102-136)<br>(115-156)<br>(203-258)<br>(244-312)<br>(100-130)<br>(300-420) |
| 9. | Nut, Ring Gear Bolt<br><br><br><br><br><br>Flange Head<br>Standard Hex Head | .50-13<br>.50-20<br>.62-11<br>.62-18<br>M12 x 1.25<br>M12 x 1.75<br>M16 x 1.5<br>M16 x 1.5 | 75-100<br>85-115<br>150-190<br>180-230<br>66-81<br>77-85<br>192-214<br>196-262 | (102-136)<br>(115-156)<br>(203-258)<br>(244-312)<br>(90-110)<br>(104-115)<br>(260-290)<br>(265-355) |
| 10. | Capscrew, Bearing Cap | .56-12<br>.62-11<br>.75-10<br>.88-14<br>.88-9<br>M16 x 2<br>M20 x 2.5<br>M22 x 2.5 | 110-145<br>150-190<br>270-350<br>360-470<br>425-550<br>181-221<br>347-431<br>479-597 | (149-197)<br>(203-258)<br>(366-475)<br>(488-637)<br>(576-746)<br>(245-300)<br>(470-585)<br>(650-810) |
| 11. | Nut, Housing to Carrier Stud | .44-20<br>.50-20<br>.56-18<br>.62-18 | 50-75<br>75-115<br>110-165<br>150-230 | (68-102)<br>(102-156)<br>(149-224)<br>(203-312) |

| Fastener | | Thread Size | Torque Value lb-ft (N·m) | |
|---|---|---|---|---|
| 12. | Capscrew, Carrier to Housing | .44-14<br>.50-13<br>.56-12<br>.62-11<br>.75-10<br>M12 x 1.75<br>M16 x 2 | 50-75<br>75-115<br>110-165<br>150-230<br>270-400<br>74-89<br>181-221 | (68-102)<br>(102-156)<br>(149-224)<br>(203-312)<br>(366-542)<br>(100-120)<br>(245-300) |
| 13. | Jam Nut, Thrust Screw | .75-16<br>.88-14<br>1.12-16<br>M22 x 1.5<br>M30 x 1.5 | 150-190<br>150-300<br>150-190<br>148-210<br>236-295 | (203-258)<br>(203-407)<br>(203-258)<br>(200-285)<br>(320-400) |
| 14. | Input Yoke-to-Input Shaft Nut | Refer to table below (Input and Output Yoke Pinion Nut Fastener Torque Specifications Single Axles). | | |
| 15. | Capscrew, Bearing Cage | .38-16<br>.44-14<br>.50-13<br>.56-12<br>.62-11<br>M12 x 1.75 | 30-50<br>50-75<br>75-115<br>110-165<br>150-230<br>70-110 | (41-68)<br>(68-102)<br>(102-156)<br>(149-224)<br>(203-312)<br>(90-150) |
| 16. | Plug, Oil Fill, Carrier | .75-14<br>1.5-11.5<br>M24 x 1.5 | 25 minimum (34 minimum)<br>120 minimum (163 minimum)<br>35 minimum (47 minimum) | |
| 17. | Capscrew, Lock Plate | .31-18<br>M8 x 1.25 | 20-30<br>21-26 | (27-41)<br>(28-35) |
| 18. | Lock Nut, Sensor Switch | M16 x 1.0 | 25-35 | (35-45) |
| 19. | Air Cylinder | M60 x 2.0 | 80-100 | (109-136) |
| 20. | Screw-in DCDL Cylinder Plug or Cup | M60 x 2.0 | 80-100 | (109-136) |

**Input and Output Yoke Pinion Nut Fastener Torque Specifications Single Axles**

| Axle Model / Pinion Nut Location | RS-145 | | RS-160 | |
|---|---|---|---|---|
| | Fastener Size | Torque value lb-ft (N·m) | Fastener Size | Torque value lb-ft (N·m) |
| Carrier input yoke | M39 x 1.5 | 920-1130 (1250-1535) | M45 x 1.5 | 1000-1230 (1350-1670) |

# TORQUE VALUES FOR FASTENERS

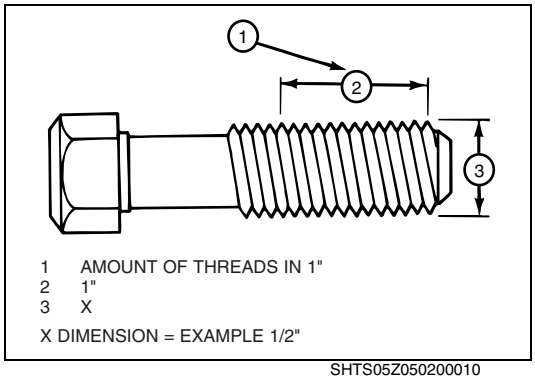


1 AMOUNT OF THREADS IN 1"
2 1"
3 X
X DIMENSION = EXAMPLE 1/2"

SHTS05Z050200010

## 1. GENERAL INFORMATION

(1) The torque values on page DF02-11–12 are for fasteners that have a light application of oil on the threads.

- **If the fasteners are dry:** Increase the torque values by 10%.
- **If the fasteners have a heavy application of oil on the threads:** Decrease the torque values by 10%.

(2) If you do not know the size of the fastener that is being installed, measure the fastener. Use the following procedure.

## 2. AMERICAN STANDARD FASTENERS

a. Measure the diameter of the threads in inches, dimension X.

b. Count the amount of threads in 1-inch.

**Example**

- American Standard size fastener is 0.50-13.
- 0.50 is the diameter of the fastener in inches or dimension X.
- 13 is the amount of threads in 1-inch.

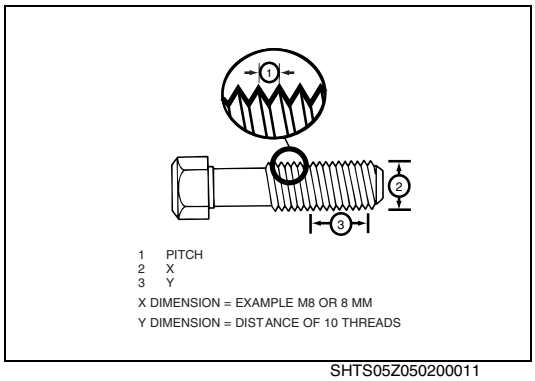


1 PITCH
2 X
3 Y
X DIMENSION = EXAMPLE M8 OR 8 MM
Y DIMENSION = DISTANCE OF 10 THREADS

SHTS05Z050200011

## 3. METRIC FASTENERS

a. Measure the diameter of the threads in millimeters (mm), dimension X.

b. Measure the distance of 10 threads, point to point in millimeters (mm), dimension Y. Make a note of dimension Y.

c. Divide dimension Y by 10. The result will be the distance between two threads or pitch.

**Example**

- Metric size fastener is M8 x 1.25. M8 is the diameter of the fastener in millimeters (mm) or dimension X.
- 1.25 is the distance between two threads or pitch.

(1) Compare the size of fastener measured in 1. (2) above to the list of fasteners on page DF02-11–12 to find the correct torque value.

# OVERHAUL

EN05Z0502H200001

## BEFORE YOU BEGIN

This manual provides instructions for the Meritor RS-Series axles. Before you begin procedures:

1. Read and understand all instructions and procedures before you begin to service components.
2. Read and observe all Caution and Warning safety alerts that precede instructions or procedures you will perform. These alerts help to avoid damage to components, serious personal injury, or both.
3. Follow your company's maintenance and service, installation, and diagnostics guidelines.
4. Use special tools when required to help avoid serious personal injury and damage to components.

### 1. SAFETY ALERTS, TORQUE SYMBOL AND NOTES

| | |
|---|---|
| ⚠ **WARNING** | A Warning alerts you to an instruction or procedure that you must follow exactly to avoid serious personal injury. |
| ⚠ **CAUTION** | A Caution alerts you to an instruction or procedure that you must follow exactly to avoid damage to components. |
| **NOTICE** | A Note provides information or suggestions that help you correctly service a component. |

### 2. ACCESS PRODUCT AND SERVICE INFORMATION ON OUR WEBSITE

Visit the DriveTrain Plus™ by ArvinMeritor Tech Library at arvinmeritor.com to access and order product and service information.

### 3. TO ORDER INFORMATION BY PHONE

Call ArvinMeritor's Customer Service Center at 800-535-5560 to order the following publications.

- Lubrication
- Single-Reduction Differential Carriers

## IMPORTANT POINTS - DISMOUNTING

**⚠ WARNING**
**To prevent serious eye injury, always wear safe eye protection when you perform vehicle maintenance or service.**

**Park the vehicle on a level surface. Block the wheels to prevent the vehicle from moving. Support the vehicle with safety stands. Do not work under a vehicle supported only by jacks. Jacks can slip and fall over. Serious personal injury can result.**

**Use a brass or leather mallet for assembly and disassembly procedures. Do not hit steel parts with a steel hammer. Pieces of a part can break off and cause serious personal injury.**

**1. REMOVAL OF DIFFERENTIAL CARRIER FROM THE AXLE HOUSING**

(1) Park the vehicle on a level surface. Block the wheels to prevent the vehicle from moving.

(2) Use a jack or other lifting tool to raise the vehicle so that the wheels to be serviced are off the ground. Support the vehicle with safety stands.

(3) Place a drain pan under the rear axle.

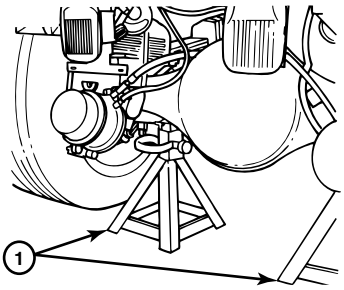


1 SAFETY STANDS

SHTS05Z050200012

(4) Remove the plug from bottom of axle housing. Drain lubricant from the assembly.

(5) Disconnect the driveline universal joint from the pinion input yoke or flange on the carrier.

(6) Remove the capscrews and washers or stud nuts and washers, if equipped, from the flanges of both axle shafts.

(7) Loosen the tapered dowels, if equipped, in the axle flanges of both axle shafts using one of the following methods.

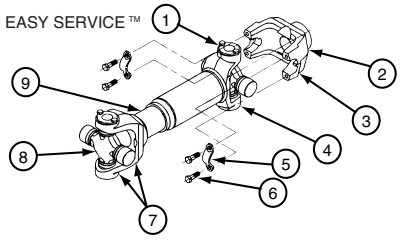


1 FULL ROUND BEARING CUPS
2 END YOKE
3 YOKE SADDLE
4 WELD YOKE
5 BEARING STRAP
6 CAPSCREWS
7 EASY-SERVICE BEARING CUPS
8 U-JOINT CROSS
9 SLIP YOKE

For details,
Refer to the
Propeller shaft chapter.

SHTS05Z050200013

(8) Brass Drift Method

**⚠ WARNING**
**Do not strike the round driving lugs on the flange of an axle shaft. Pieces can break off and cause serious personal injury.**

a. Hold a 1-1/2-inch diameter brass drift or brass hammer against the center of the axle shaft, inside the round driving lugs.

b. Strike the end of the drift with a large hammer, five to six pounds, and the axle shaft and tapered dowels will loosen.

c. Mark each axle shaft before it is removed from the axle assembly.

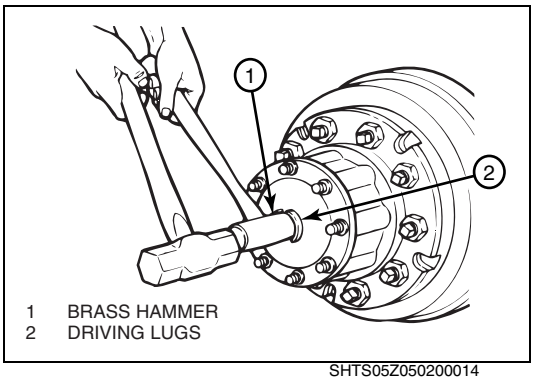


1 BRASS HAMMER
2 DRIVING LUGS

SHTS05Z050200014

d. Remove the tapered dowels and separate the axle shafts from the main axle hub assembly.

e. Install a cover over the open end of each axle assembly hub where an axle shaft was removed.

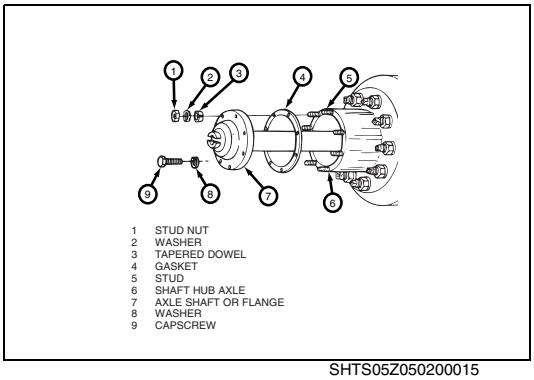


1 STUD NUT
2 WASHER
3 TAPERED DOWEL
4 GASKET
5 STUD
6 SHAFT HUB AXLE
7 AXLE SHAFT OR FLANGE
8 WASHER
9 CAPSCREW

SHTS05Z050200015

(9) Air Hammer Vibration Method

**⚠ WARNING**
**Wear safe eye protection when using an air hammer. When using power tools, axle components can loosen and break off causing serious personal injury.**

**⚠ CAUTION**
**Do not use a chisel or wedge to loosen the axle shaft and tapered dowels. Using a chisel or wedge can result in damage to the axle shaft, the gasket and seal, and the axle hub.**

a. Use a round hammer bit and an air hammer to loosen tapered dowels and axle shaft.

b. Place the round hammer bit against the axle shaft or flange between the hub studs. Operate the air hammer at alternate locations between the studs to loosen the tapered dowels and axle shaft from the hub.

c. Mark each axle shaft before it is removed from the axle assembly.

d. Remove the tapered dowels and separate the axle shaft from the main axle hub assembly.

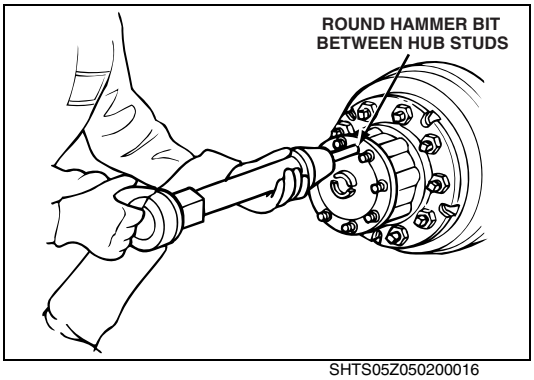


SHTS05Z050200016

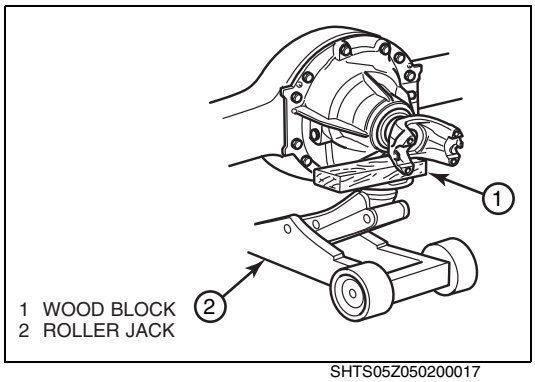


1 WOOD BLOCK
2 ROLLER JACK

SHTS05Z050200017

**2. CARRIER FROM THE AXLE**

(1) Place a hydraulic roller jack under the differential carrier to support the assembly.

(2) Remove all but the top two carrier to housing capscrews or stud nuts and washers.

(3) Loosen the top two carrier-to-housing fasteners and leave attached to the assembly. The fasteners will hold the carrier in the housing.

(4) Loosen the differential carrier in the axle housing. Use a leather mallet to hit the mounting flange of carrier at several points.

(5) After the carrier is loosened, remove the top two fasteners.

**⚠ CAUTION**

**When using a pry bar, be careful not to damage the carrier or housing flange. Damage to these surfaces will cause oil leaks.**

(6) Use the hydraulic roller jack to remove the carrier from the axle housing. Use a pry bar that has a round end to help remove the carrier from the housing.

**NOTICE**

**A carrier stand is available from SPX Kent-Moore. Refer to DF02-8–9**

(7) Use a lifting tool to lift the differential carrier by the input yoke or flange and place the assembly in a repair stand. Do not lift by hand.

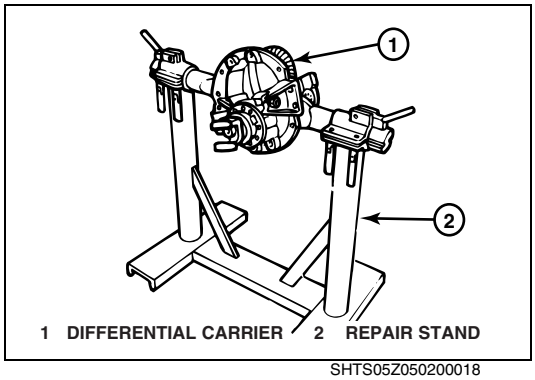


**1 DIFFERENTIAL CARRIER 2 REPAIR STAND**

SHTS05Z050200018

## IMPORTANT POINTS - DISASSEMBLY

### 1. DIFFERENTIAL AND RING GEAR FROM THE CARRIER

**NOTICE**

**Before working on the differential carrier, inspect the hypoid gear set for damage. If inspection shows no damage, the same gear set can be used again. Measure the backlash of the gear set and make a record of the dimension. Refer to page DF02-44.**

(1) Loosen the jam nut on the thrust screw, if equipped.
(2) Remove the thrust screw and jam nut, if equipped, from the differential carrier.

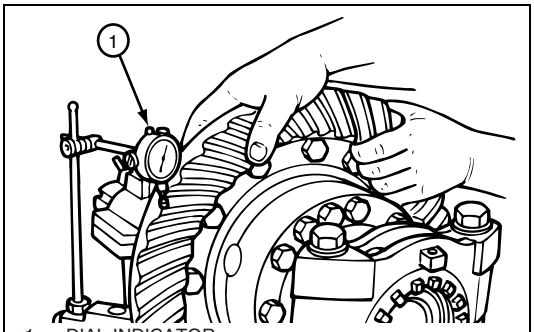


1 DIAL INDICATOR

SHTS05Z050200019

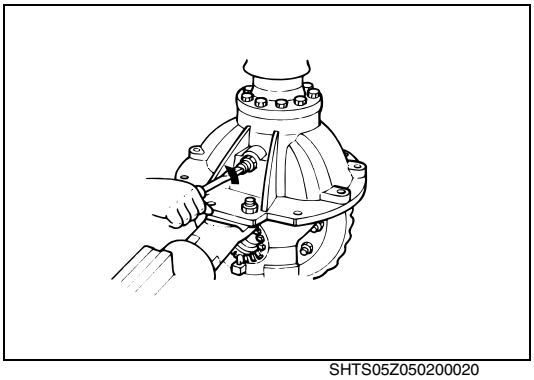

SHTS05Z050200020

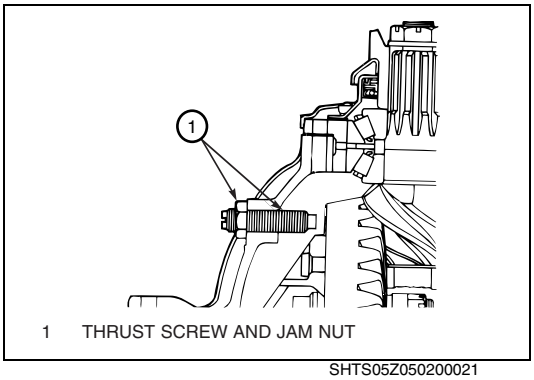


1 THRUST SCREW AND JAM NUT

SHTS05Z050200021

(3) Rotate the differential carrier in the repair stand until the ring gear is at the top of the assembly.

(4) Mark one carrier leg and bearing cap to correctly match the parts during carrier assembly. Mark the parts using a center punch and hammer.

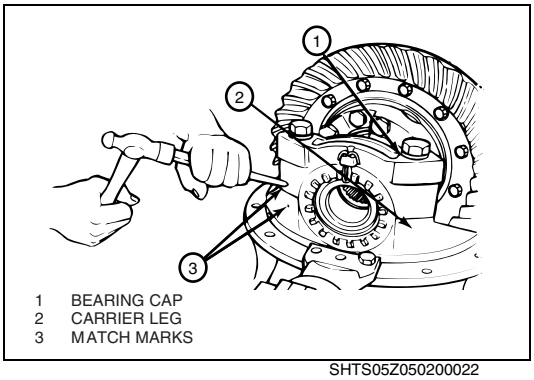


1 BEARING CAP
2 CARRIER LEG
3 MATCH MARKS

SHTS05Z050200022

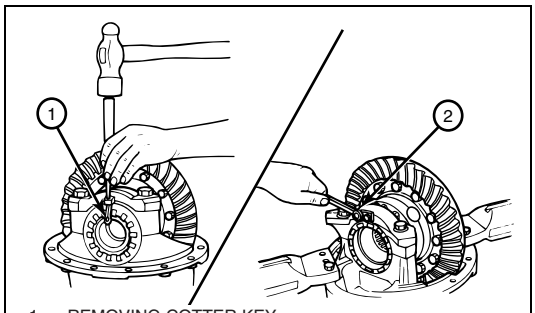


1 REMOVING COTTER KEY
2 REMOVING LOCK PLATE

SHTS05Z050200023

(5) Remove the cotter keys, pins or lock plates, if equipped, that hold the bearing adjusting rings in position. Use a small drift and hammer to remove pins. Each lock plate is held in position by two capscrews.

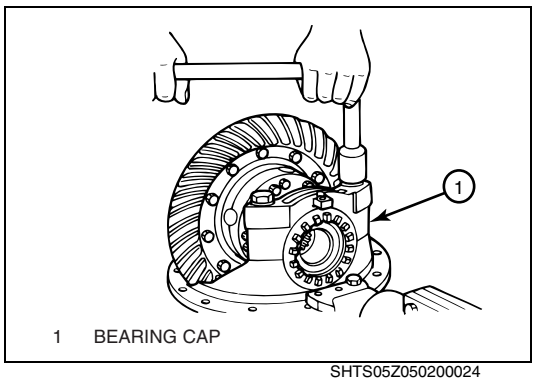


1 BEARING CAP

SHTS05Z050200024

(6) Remove the capscrews and washers that hold the two bearing caps on the carrier. Each cap is held in position by two capscrews and washers.

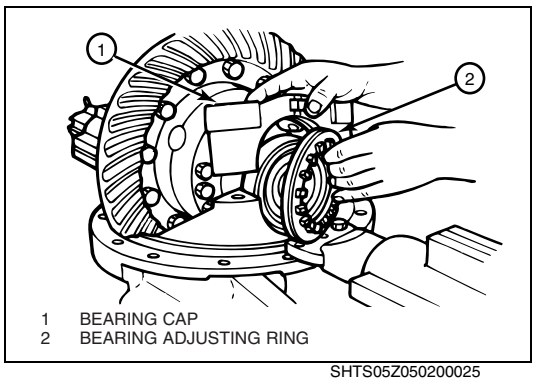


1 BEARING CAP
2 BEARING ADJUSTING RING

SHTS05Z050200025

(7) Remove the bearing caps and bearing adjusting rings from the carrier.

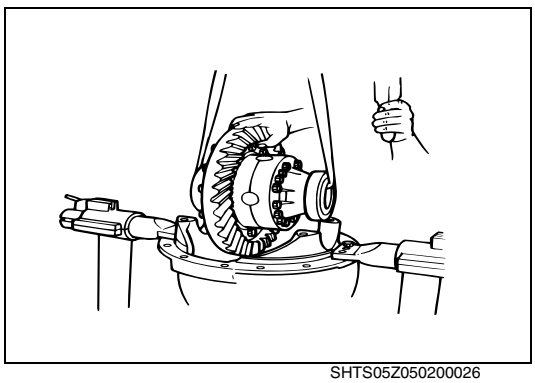

SHTS05Z050200026

(8) Safely lift the main differential and ring gear assembly from the carrier. Place the assembly on a work bench.

## 2. DISASSEMBLY OF DIFFERENTIAL AND RING GEAR ASSEMBLY

**⚠ WARNING**
**Observe all warnings and cautions provided by the press manufacturer to avoid damage to components and serious personal injury.**

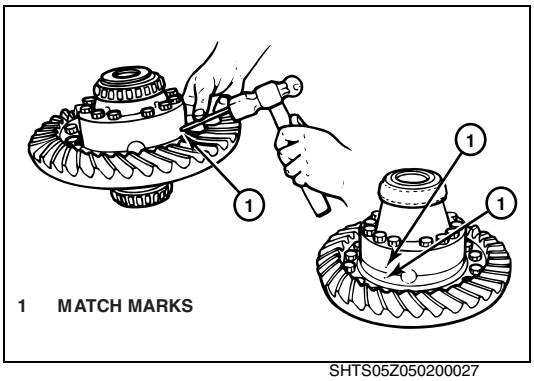


1 MATCH MARKS

SHTS05Z050200027

(1) If the match marks on the case halves of the differential assembly are not visible, mark each case half with a center punch and hammer.

(2) Remove the capscrews and washers or bolts, nuts and washers, if equipped, that hold the case halves together.

(3) Separate the case halves. If necessary, use a brass, plastic or leather mallet to loosen the parts.

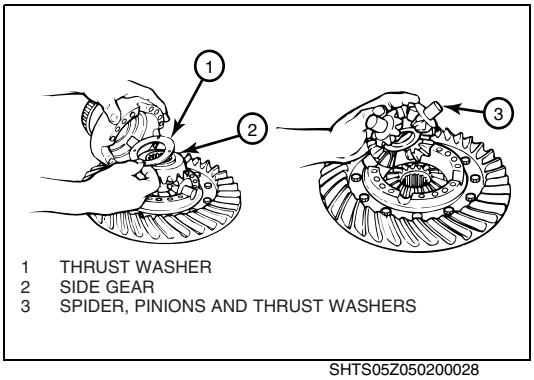


1 THRUST WASHER
2 SIDE GEAR
3 SPIDER, PINIONS AND THRUST WASHERS

SHTS05Z050200028

(4) Remove the differential spider or cross, four pinion gears, two side gears and six thrust washers from inside the case halves.

(5) If the ring gear needs to be replaced, remove the bolts, nuts, and washers, if equipped, that hold the gear to the flange case half.

**⚠ CAUTION**
**Do not remove the rivets or rivet heads with a chisel and hammer. Using a flat edge tool can cause damage to the flange case.**

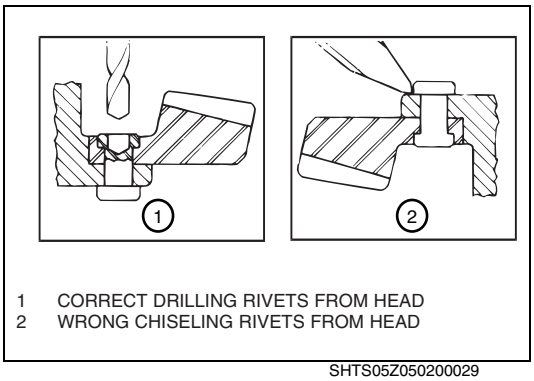


1 CORRECT DRILLING RIVETS FROM HEAD
2 WRONG CHISELING RIVETS FROM HEAD

SHTS05Z050200029

(6) If rivets hold the ring gear to the flange case half, remove the rivets as follows.

a. Carefully center punch each rivet head in the center, on the ring gear side of the assembly. Do not use a chisel and hammer.

b. Drill each rivet head on the ring gear side of the assembly to a depth equal to the thickness of one rivet head. Use a drill bit that is 0.03125-inch (0.79375 mm) smaller than the body diameter of the rivets.

c. Press the rivets through holes in the ring gear and flange case half. Press from the drilled rivet head.

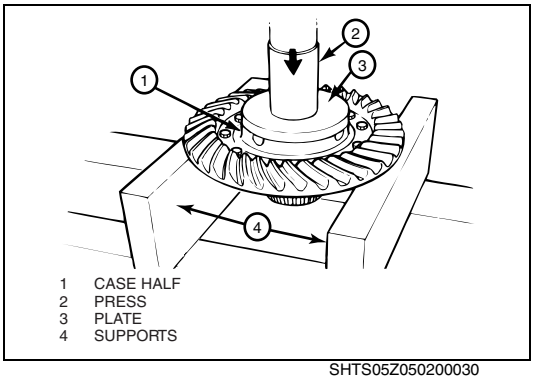


1 CASE HALF
2 PRESS
3 PLATE
4 SUPPORTS

SHTS05Z050200030

(7) Use a press to separate the case half and ring gear. Support the assembly under the ring gear with metal or wood blocks. Press the case half through the gear.

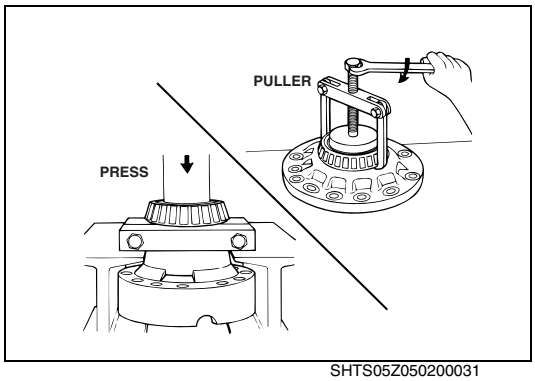

SHTS05Z050200031

(8) If the differential bearings need to be replaced, use a bearing puller or press to remove the bearing cones from the case halves.

### 3. REMOVAL OF DRIVE PINION AND BEARING CAGE FROM THE CARRIER

(1) Fasten a flange bar to the input yoke or flange. When the nut is removed, the bar will hold the drive pinion in position.

(2) Remove the nut and washer, if equipped, from the drive pinion.
(3) Remove the yoke or flange bar.

**⚠ CAUTION**
**Do not use a hammer or mallet to loosen and remove the yoke or flange. A hammer or mallet can damage the parts and cause driveline runout, or driveline imbalance problems after carrier to driveline assembly.**

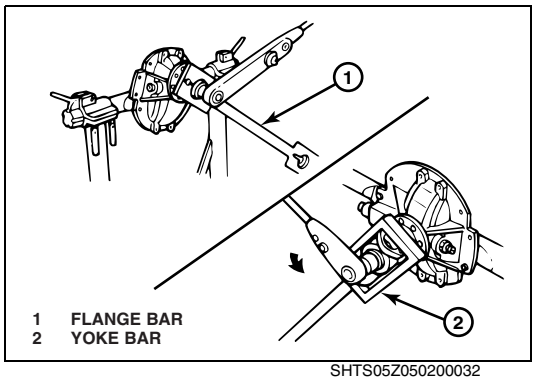

SHTS05Z050200032

(4) Remove the yoke or flange from the drive pinion. Do not use a hammer or mallet.

- **If the yoke or flange is tight on the pinion:**
  Use a puller for removal.

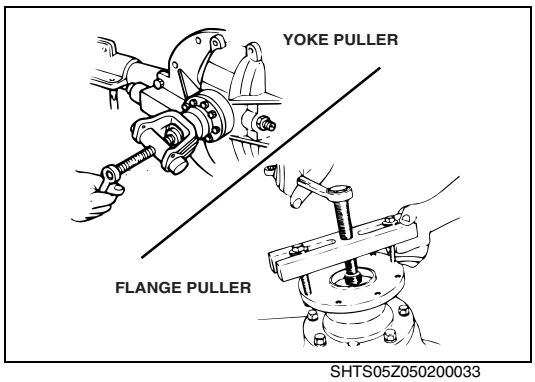

SHTS05Z050200033

(5) Remove the capscrews and washers that hold the bearing cage in the carrier.

**⚠ CAUTION**
**Do not use a pry bar to remove the bearing cage from the carrier. A pry bar can damage the bearing case, shims and carrier.**

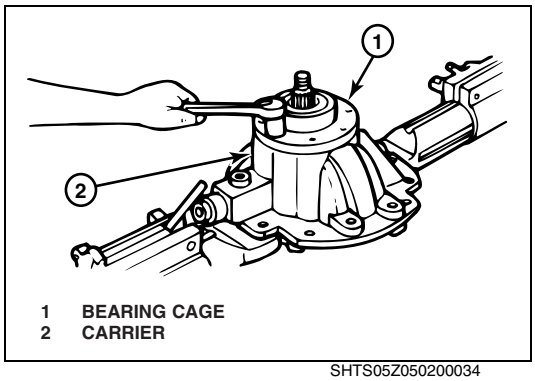

SHTS05Z050200034

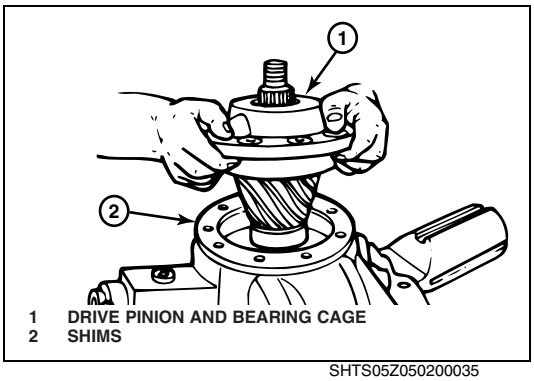


1 DRIVE PINION AND BEARING CAGE
2 SHIMS

SHTS05Z050200035

(6) Remove the drive pinion, bearing cage and shims from the carrier. Do not use a pry bar.

- **If the bearing cage is tight in the carrier:** Hit the bearing cage at several points around the flange area with a leather, plastic or rubber mallet.

(7) If the shims are in good condition, keep the shims together to use when the carrier is assembled.

(8) If shims are to be discarded because of damage, first measure the total thickness of the pack. Make a note of the dimension. The dimension will be needed to calculate the depth of the drive pinion in the carrier when the gear set is installed.

## 4. DISASSEMBLY OF DRIVE PINION AND BEARING CAGE

**⚠ WARNING**
**Observe all warnings and cautions provided by the press manufacturer to avoid damage to components and serious personal injury.**

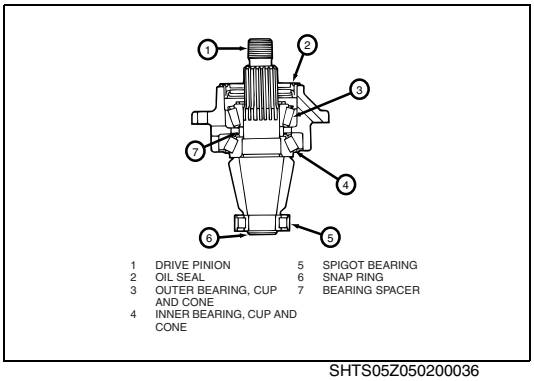


1 DRIVE PINION
2 OIL SEAL
3 OUTER BEARING, CUP AND CONE
4 INNER BEARING, CUP AND CONE
5 SPIGOT BEARING
6 SNAP RING
7 BEARING SPACER

SHTS05Z050200036

(1) Place the drive pinion and bearing cage in a press. The pinion shaft must be toward the top of the assembly.

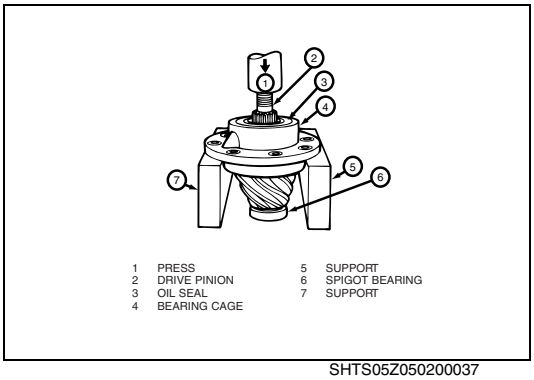


1 PRESS
2 DRIVE PINION
3 OIL SEAL
4 BEARING CAGE
5 SUPPORT
6 SPIGOT BEARING
7 SUPPORT

SHTS05Z050200037

(2) Support the bearing cage under the flange area with metal or wood blocks.

(3) Press the drive pinion through the bearing cage. The inner bearing cone and bearing spacer will remain on the pinion shaft.

- **If a press is not available:** Use a leather, plastic or rubber mallet to drive the pinion through the bearing cage.

**⚠ CAUTION**
**Be careful when removing the seal. Do not damage the wall of bore. Damage to the bore wall can result in oil leaks.**

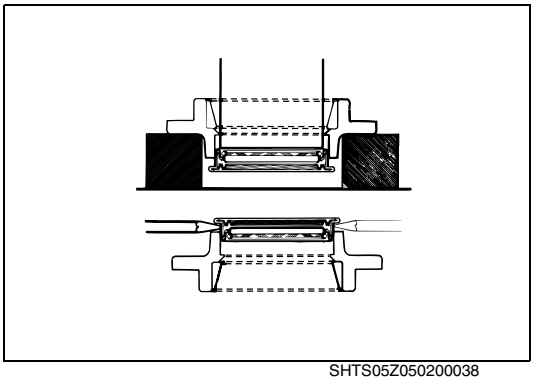

SHTS05Z050200038

(4) Use a press and a sleeve to remove the triple-lip or unitized oil seal from the bearing cage.

- **If a press is not available:** Place a tool with a flat blade under the flange to remove the oil seal from the cage.

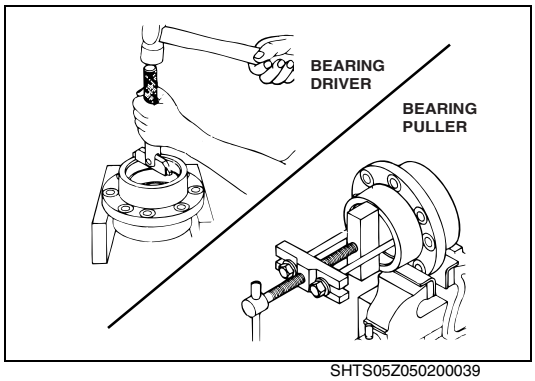


SHTS05Z050200039

(5) If the pinion bearings need to be replaced, remove the inner and outer bearing cups from the inside of cage. Use a press and sleeve, bearing puller or a small drift hammer. The type of tool used depends on the design of the bearing cage.

When a press is used, support the bearing cage under the flange area with metal or wood blocks.

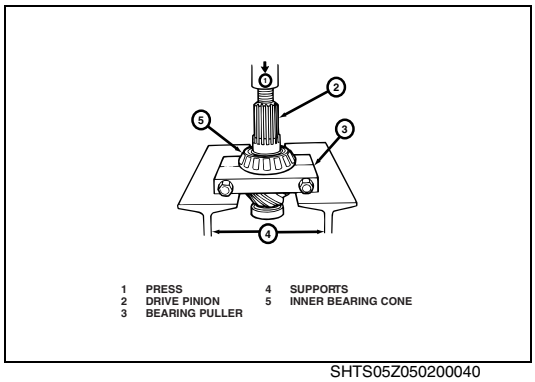


SHTS05Z050200040

(6) If the pinion bearings need to be replaced, remove the inner bearing cone from the drive pinion with a press or bearing puller. The puller MUST fit under the inner race of the cone to remove the cone correctly without damage.

(7) If the spigot bearing needs to be replaced, place the drive pinion in a vise. Install a soft metal cover over each vise jaw to protect the drive pinion.

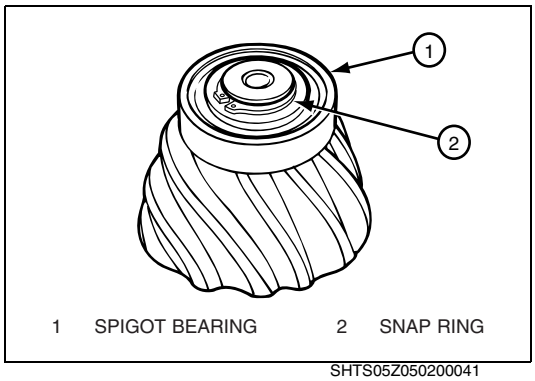


SHTS05Z050200041

(8) Remove the snap ring, if equipped, from the end of drive pinion with snap ring pliers that expand.

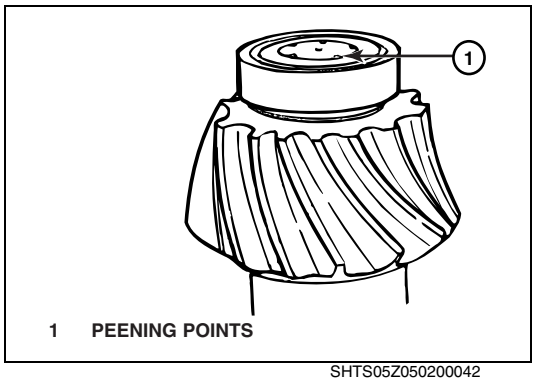


SHTS05Z050200042

(9) Remove the spigot bearing from the drive pinion with a bearing puller. Some spigot bearings are fastened to the drive pinion with a special peening tool.

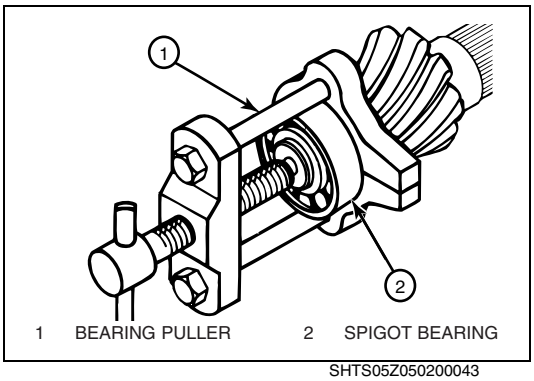


1 BEARING PULLER 2 SPIGOT BEARING

SHTS05Z050200043

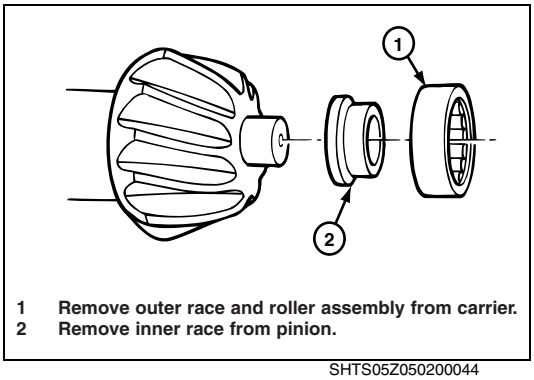


**1 Remove outer race and roller assembly from carrier.**
**2 Remove inner race from pinion.**

SHTS05Z050200044

(10) If the spigot bearings are a two-piece assembly, remove the inner race from the pinion with a bearing puller. Remove the outer race and roller assembly from the carrier with a drift or a press.

**5. GEAR SETS**

Refer to the following examples for information on identifying gear sets with matched parts. Always check match numbers to verify that the gear set you will install has matched parts.

(1) Gear Set

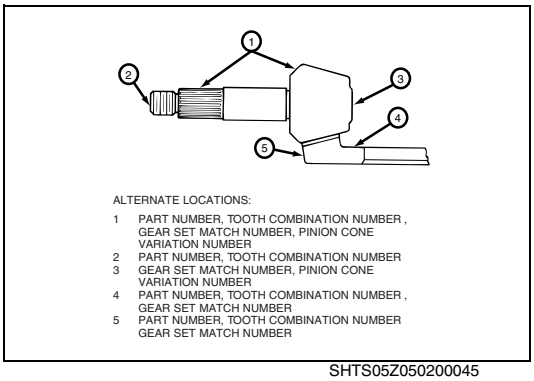


ALTERNATE LOCATIONS:

1 PART NUMBER, TOOTH COMBINATION NUMBER , GEAR SET MATCH NUMBER, PINION CONE VARIATION NUMBER
2 PART NUMBER, TOOTH COMBINATION NUMBER
3 GEAR SET MATCH NUMBER, PINION CONE VARIATION NUMBER
4 PART NUMBER, TOOTH COMBINATION NUMBER , GEAR SET MATCH NUMBER
5 PART NUMBER, TOOTH COMBINATION NUMBER GEAR SET MATCH NUMBER

SHTS05Z050200045

| Parts | Number | Location |
|---|---|---|
| **Conventional ring gear** | **36786** | **On the front face or outer diameter** |
| **Conventional drive pinion** | **36787** | **At the end at threads** |
| **Generoid ring gear** | **36786 K or 36786 K2** | **On the front face or outer diameter** |
| **Generoid drive pinion** | **36787 K or 36787 K2** | **At the end at threads** |

(2) Gear Set Tooth Combination Number

| Gear Set Teeth | Drive Pinion Location | Ring Gear Location |
|---|---|---|
| **5-37 = gear set has a five-tooth drive pinion and a 37-tooth ring gear** | **At the end at threads** | **On the front face or outer diameter** |

(3) Gear Set Match Number

**NOTICE**

**Meritor's drive pinions and ring gears are only available as matched sets. Each gear in a set has an alpha-numeric match number.**

| Match Number | Drive Pinion Location | Ring Gear Location |
|---|---|---|
| M29 | At the end of the gear head | On the front face or outer diameter |

(4) Pinion Cone Variation Number

**NOTICE**

**Don't use the pinion cone variation number when you check for a matched gear set. Use this number when you adjust the pinion depth in the carrier. Refer to page DF02-34.**

| Pinion Cone (PC) Variation Number | Drive Pinion Location | Ring Gear Location |
|---|---|---|
| PC+3<br>+2<br>+0.01 mm<br>PC-5<br>-1 | At the end of the pinion gear head | At the end of the pinion gear head |

## IMPORTANT POINTS - ASSEMBLY

**⚠ WARNING**

**To prevent serious eye injury, always wear safe eye protection when you perform vehicle maintenance or service.**

**Use a brass or leather mallet for assembly and disassembly procedures. Do not hit steel parts with a steel hammer. Pieces of a part can break off and cause serious personal injury.**

**Observe all warnings and cautions provided by the press manufacturer to avoid damage to components and serious personal injury.**

**1. ASSEMBLY OF DRIVE PINION, BEARINGS AND BEARING CAGE**

(1) Place the bearing cage in a press.

(2) Support the bearing cage with metal or wood blocks.

(3) Press the bearing cup into the bore of bearing cage until cup is flat against bottom of the bore. Use a sleeve of the correct size to install bearing cup.

**NOTICE**

**Use the same procedure for both bearing cups.**

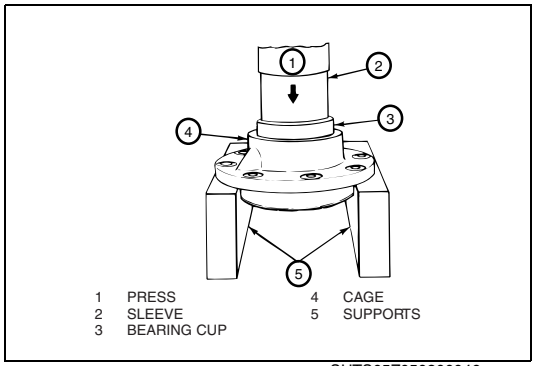


1 PRESS
2 SLEEVE
3 BEARING CUP
4 CAGE
5 SUPPORTS

SHTS05Z050200046

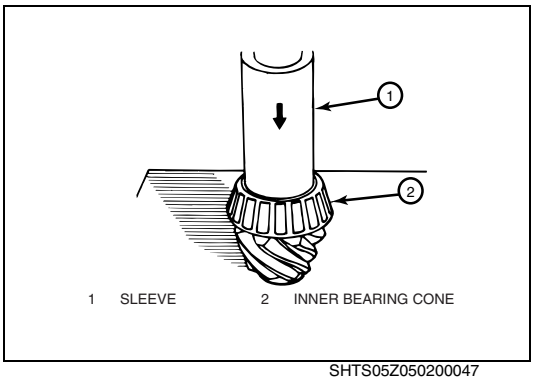


1 SLEEVE 2 INNER BEARING CONE

SHTS05Z050200047

(4) Place the drive pinion in a press with the gear head or teeth toward the bottom.

(5) Press the inner bearing cone on the shaft of the drive pinion until the cone is flat against the gear head. Use a sleeve of the correct size against the bearing inner race.

**NOTICE**

**Spigot bearings are usually fastened to the drive pinion with a snap ring. Some are fastened with a peening tool, and some are a two-piece bearing assembly with the inner race pressed on the nose of the pinion and the outer race pressed into its bore in the carrier.**

(6) Install the spigot bearing using one of the following three procedures.

### 2. INSTALLATION OF ONE-PIECE SPIGOT BEARING ON THE DRIVE PINION WITH SNAP RING

**NOTICE**

**The following procedure applies to all axles except:**

- Some 160 Series single axles may use snap rings.

(1) Place the drive pinion in a press with the gear head or the teeth toward the top.

(2) Press the spigot bearing on the end of drive pinion. The bearing must be flat against the gear head. Use a sleeve of the correct size against the bearing inner race.

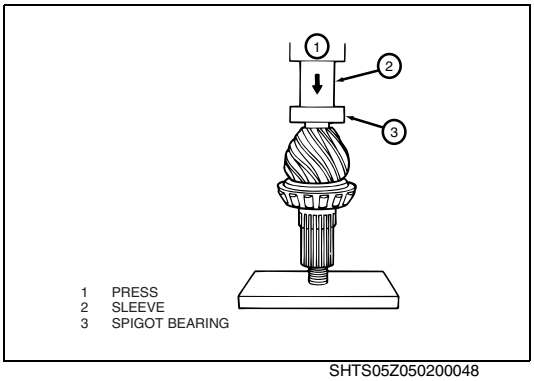


1 PRESS
2 SLEEVE
3 SPIGOT BEARING

SHTS05Z050200048

(3) Use snap ring pliers to install the snap ring, if equipped, into the groove in the end of the drive pinion.

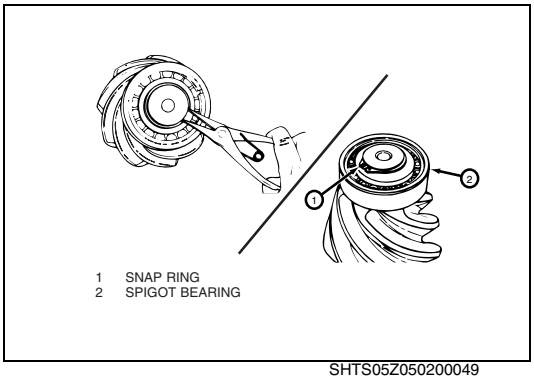


1 SNAP RING
2 SPIGOT BEARING

SHTS05Z050200049

### 3. INSTALLATION OF ONE-PIECE SPIGOT BEARING ON THE DRIVE PINION WITHOUT SNAP RING

**NOTICE**

**The following procedure applies to existing snap ring components.**

**For ordering information about the staking tool, refer to page DF02-9.**

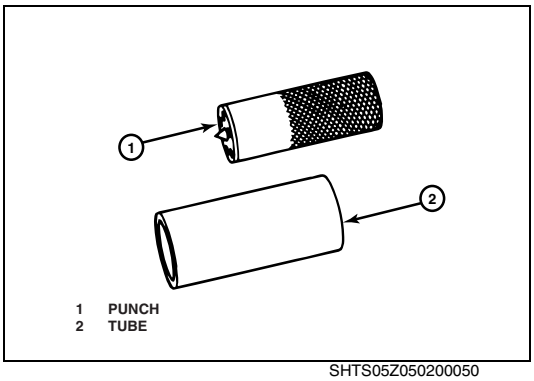


**1 PUNCH**
**2 TUBE**

SHTS05Z050200050

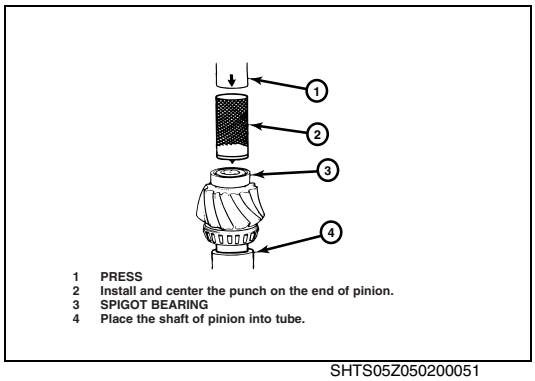


1 PRESS
2 Install and center the punch on the end of pinion.
3 SPIGOT BEARING
4 Place the shaft of pinion into tube.

SHTS05Z050200051

(1) Place the drive pinion and the tube of the staking tool in a press with the spigot bearing toward the top.

(2) When using a staking tool and press, apply 6,614 lb (3,000 kg) force on a 0.375-inch (10 mm) ball. Calculate the force required on the tool as follows.

6,614 lb (3,000 kg) x amount of balls in tool = pounds or kilograms

**Example**

6,614 lb (3,000 kg) x 3 balls = 19,842 pounds (9,000 kg)

(3) Place the punch of the staking tool over the end of the pinion and spigot bearing. Apply the required amount of force on the punch.

**⚠ CAUTION**
**Do not align new points with the grooves in the end of the drive pinion or in old points. If the new staked points are placed in the wrong areas, the spigot bearing will not be held correctly on the pinion shaft.**

**NOTICE**
**If a three-ball stake tool is used, rotate the tool 180 degrees.**

(4) Stake the end of the drive pinion at a minimum of five points. Rotate the punch as many times as required for a minimum of five points. Repeat Step (3) for each point.

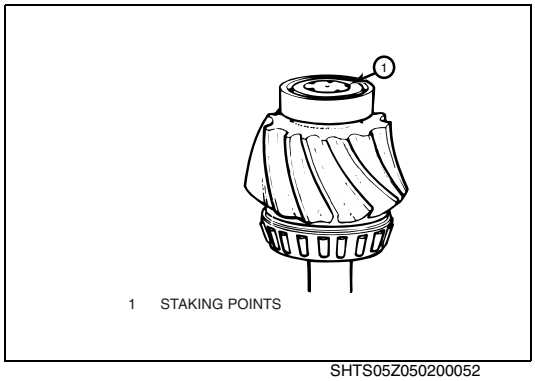


1 STAKING POINTS

SHTS05Z050200052

**4. INSTALLATION OF TWO-PIECE SPIGOT BEARING ON THE DRIVE PINION**

**NOTICE**
**This procedure applies to some 160 Series single rear axles. These axles may also use a one-piece spigot bearing with a snap ring retainer.**

**The inner race of two-piece spigot bearings must be staked in place on RS-160 series rear axles. Before you stake the pinion, you must heat the pinion stem to soften it.**

**SPX Kent-Moore kit number J-39039 includes the staking tool, temperature indicating liquid, heat shield and plastigage needed for this procedure. To obtain this kit, refer to the page DF02-9.**

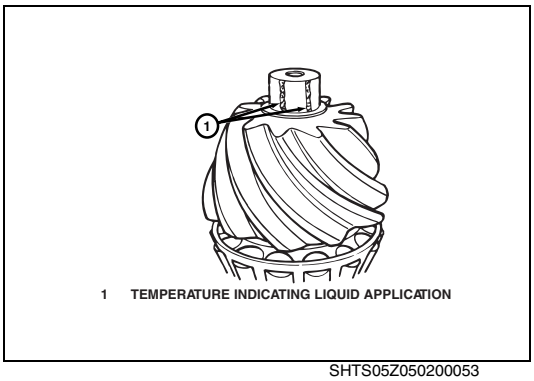


1 TEMPERATURE INDICATING LIQUID APPLICATION

SHTS05Z050200053

(1) Apply two stripes of temperature indicating liquid on the pinion stem from the top to the bottom. Apply a green stripe to indicate 400°F (205°C) and a blue stripe to indicate 500°F (260°C).

**⚠ CAUTION**
**You must use the heat shield when you heat the pinion stem. Do not heat the pinion stem without the heat shield in place. Damage to components can result.**

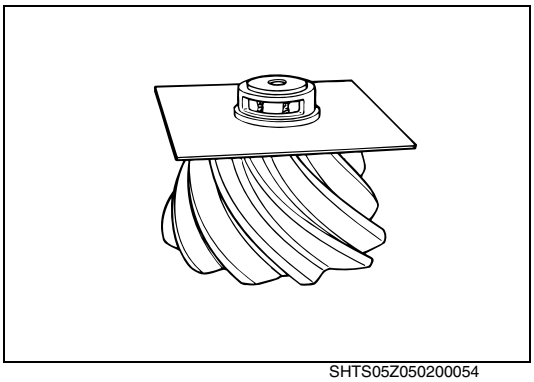

SHTS05Z050200054

(2) Place the heat shield over the pinion stem so that you can see the temperature indicating liquid through the hole in the shield.

**⚠ WARNING**
**Read the manufacturer's instructions before using a torch. Always wear safe clothing, gloves and eye protection when working with a torch for heating parts to prevent serious personal injury during assembly.**

(3) Put on safe clothing, gloves and eye protection.

**⚠ CAUTION**
**Do not overheat the pinion stem or you will weaken the metal. Damage to components can result.**

**NOTICE**
**Correct heating will take approximately 25-35 seconds, depending on how hot the torch is.**

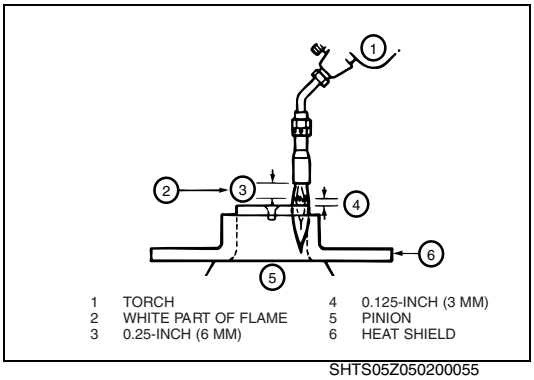


1 TORCH
2 WHITE PART OF FLAME
3 0.25-INCH (6 MM)
4 0.125-INCH (3 MM)
5 PINION
6 HEAT SHIELD

SHTS05Z050200055

(4) Light and adjust the torch until the white part of the flame is approximately 0.25-inch (6 mm) long. Keep the white part of the flame approximately 0.125-inch (3 mm) from the top of the stem. Move the flame around the outer diameter of the top of the pinion stem. The green temperature indicating liquid will turn black before the blue liquid does. Heat the stem until the blue liquid turns black at a point in the middle of the window.

(5) Remove the flame and the heat shield from the pinion. Let the pinion air cool for 10 minutes. Use a razor blade to remove the temperature indicating liquid.

**⚠ CAUTION**
**Do not press or directly strike the new inner race. Damage to the bearing will result.**

(6) Use a press, if available, or a brass hammer to install the new inner race. Use the old inner race as a sleeve. The face is completely seated when you cannot fit a 0.002-inch (0.0508 mm) feeler gauge between the race and the pinion shoulder.

**NOTICE**
**To hold the races in place, use a staking tool, not the old race, to start the new race on the stem. The old race can be used to completely seat the new race.**

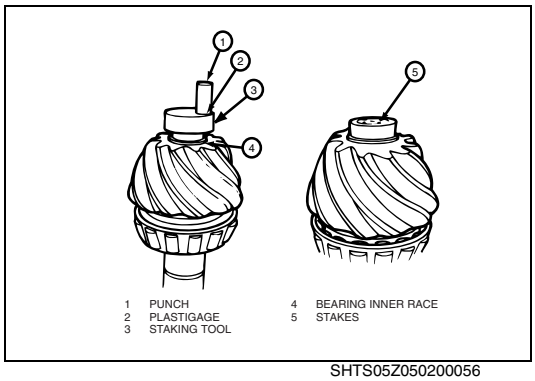


SHTS05Z050200056

(7) Place the staking tool over the bearing race. Cut a 1-inch (25 mm) piece from the green plastigage strip and place in between the punch and the staking tool. You do not need to use the plastigage for every stake. Use the plastigage until you are sure you are hitting the punch with the correct amount of force.

(8) Strike the punch with a 2-3 pound (0.9-1.4 kg) brass hammer to upset the end of the pinion stem. Remove the strip and measure its thickness against the gauge on the strip's wrapper. The strip must not be less than 0.003-inch (0.0762 mm) thick. This thickness indicates that you are using enough force when you hit the punch. If the strip is too thin, then you must hit the punch harder so the stake will hold the race in place. Rotate the tool and repeat this procedure until there are six evenly spaced stake marks around the stem.

(9) With a press or a soft mallet and sleeve, install the outer race and roller assembly into its bore in the carrier. Use a sleeve that is the same size as the outer race. Press the bearing until it is squarely against the shoulder in the bottom of its bore.

**5. INSTALLATION OF DRIVE PINION**

(1) Apply axle lubricant to the bearing cups and to the bearing cones in the cage.

(2) Install the drive pinion into the bearing cage.

(3) Install the bearing spacer or spacers onto the pinion shaft against the inner bearing cone. The spacer or spacers control the preload adjustment of the drive pinion bearings.

(4) Install the outer bearing cone onto the pinion shaft against the spacer. Do not install the pinion seal in the bearing cage.

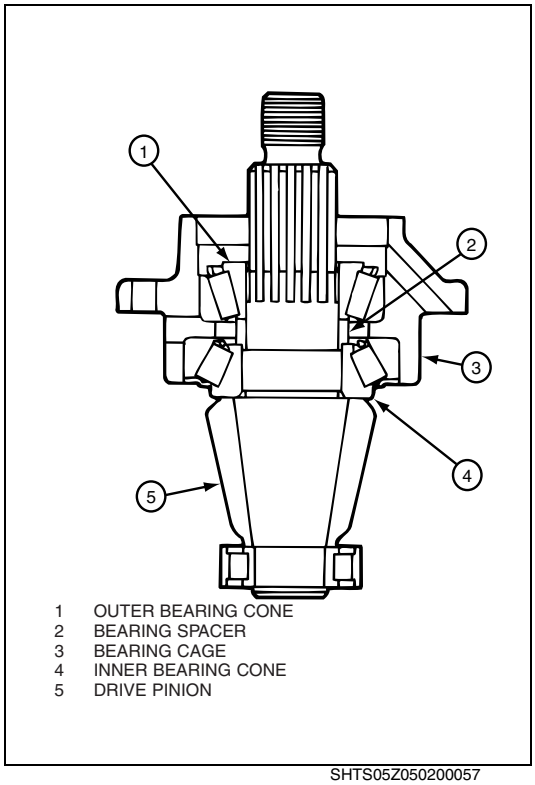


SHTS05Z050200057

**6. ADJUSTMENT OF PINION BEARING PRELOAD BY PRESS METHOD**

If a press is not available, or the press does not have a pressure gauge, use the yoke or flange method to adjust pinion bearing preload. Refer to DF02-31.

**NOTICE**

**Do not read starting torque. Read only the torque value after the cage starts to rotate. Starting torque will give an incorrect reading.**

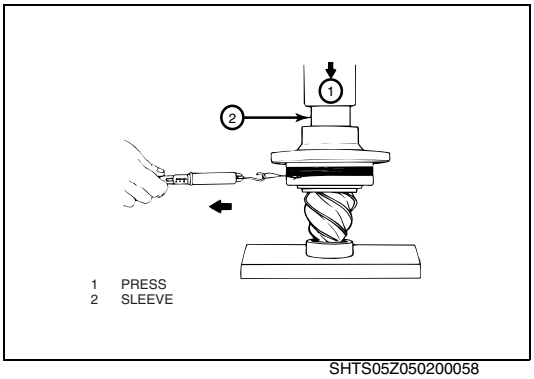


1 PRESS
2 SLEEVE

SHTS05Z050200058

(1) Place the drive pinion and cage assembly in a press, gear head or teeth toward the bottom.

(2) Install a sleeve of the correct size against the inner race of the outer bearing.

(3) Apply and hold the correct amount of pressure to the pinion bearings. Refer to table below. As pressure is applied, rotate the bearing cage several times so that the bearings make normal contact.

| Thread Size of Pinion Shaft | Press Pressure Needed on Bearings for Correct Preload | | Torque Value Needed on Pinion Nut for Correct Bearing Preload | |
|---|---|---|---|---|
| | pounds/ tons | (kg/metric-tons) | lb-ft | (N·m) |
| 7/8"-20 | 22,000/1 | (9979/10) | 200-275 | (271-373) |
| 1"-20 | 30,000/15 | (13 608/13.6) | 300-400 | (407-542) |
| 1-1/4"-12 | 54,000/27 | (24 494/24.5) | 700-900 | (949-1220) |
| 1-1/4"-18 | 54,000/27 | (24 494/24.5) | 700-900 | (949-1220) |
| 1-1/2"-12 | 54,000/27 | (24 494/24.5) | 800-1100 | (1085-1491) |
| 1-1/2"-18 | 54,000/27 | (24 494/24.5) | 800-1100 | (1085-1491) |
| 1-3/4"-12 | 50,000/25 | (22 680/22.7) | 900-1200 | (1220-1627) |
| 2"-12 | 50,000/25 | (22 680/22.7) | 1200-1500 | (1627-2034) |

(4) While pressure is held against the assembly, wind a cord around the bearing cage several times.

(5) Attach a spring scale to the end of the cord.

(6) Pull the cord on a horizontal line. As the bearing cage rotates, read the value indicated on the scale. Record the reading.

(7) Measure the diameter of the bearing cage where the cord was wound. Measure in inches or centimeters.

(8) Divide the dimension in half to get the radius. Record the radius dimension.

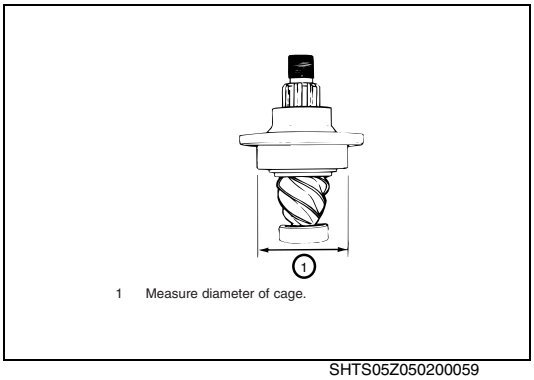


1 Measure diameter of cage.

SHTS05Z050200059

(9) Use the following procedure to calculate the bearing preload or torque.

- Pounds Pulled x Radius (inches) = lb-in Preload
  —Preload x 0.113 = N·m Preload
- Kilograms Pulled x Radius (cm) = kg·cm lb-in Preload
  —Preload x 0.098 = N·m Preload
  or

**Example**

- Reading from spring scale = 7.5 pounds (3.4 kg)
- Diameter of bearing cage = 6.62-inches (16.8 cm)
- Radius of bearing cage = 3.31-inches (8.4 cm)
  7.5 lb x 3.31 in = 24.8 in-lb Preload
  Preload x 0.113 = 2.8 N·m Preload
  or
  3.4 kg x 8.4 cm = 28.6 kg·cm Preload
  Preload x 0.098 = 2.8 N·m Preload

(10) If the preload or torque of pinion bearings is not within 5-45 lb-in (0.56-5.08 N·m) for new pinion bearings or 10-30 lb-in (1.13-3.39 N·m) for used pinion bearings in good condition, adjust the spacer and repeat Steps (1) to (9).

- **To increase preload:** Install a thinner bearing spacer.
- **To decrease preload:** Install a thicker bearing spacer.

(11) Check the bearing preload with the drive pinion and cage assembly installed in the carrier. Follow the procedures to adjust pinion bearing preload, yoke or flange method.

## 7. ADJUSTMENT OF PINION BEARING PRELOAD BY YOKE OR FLANGE METHOD

**⚠ CAUTION**
**Do not install tight-fitting yokes or flanges on shafts using a hammer or mallet. A hammer or mallet will damage the yoke or flange.**

(1) Use a press to install the input yoke or flange, nut and washer, if equipped, onto the drive pinion. The yoke or flange must be seated against the outer bearing.

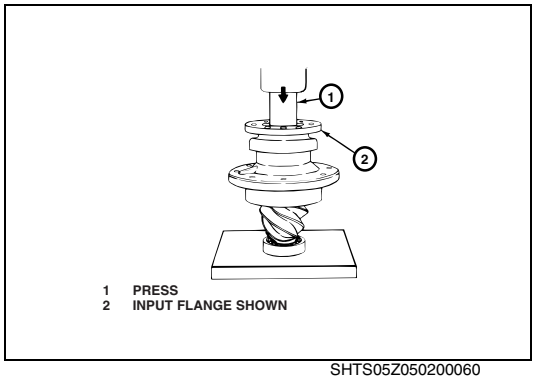


1 PRESS
2 INPUT FLANGE SHOWN

SHTS05Z050200060

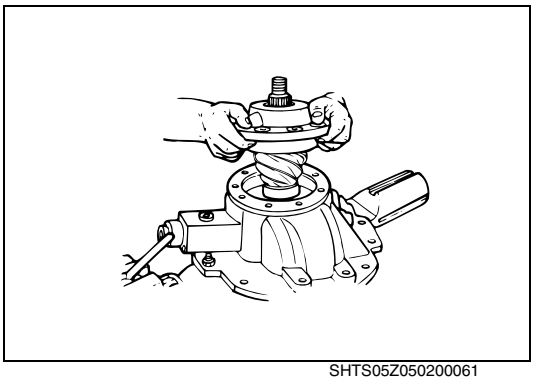

SHTS05Z050200061

(2) Install the drive pinion and cage assembly into the carrier. Do not install shims under the bearing cage.

(3) Install the bearing cage-to-carrier capscrews. Washers are not required at this time. Hand-tighten the capscrews.

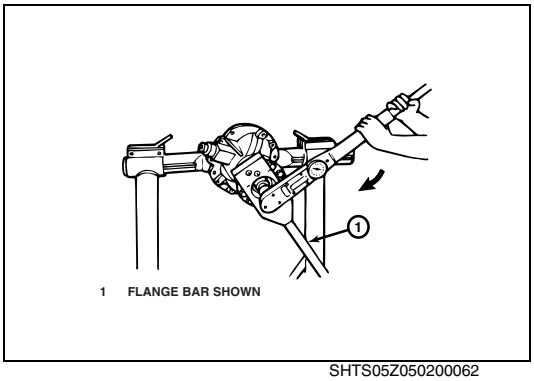


1 FLANGE BAR SHOWN

SHTS05Z050200062

(4) Fasten a yoke or flange bar to the input yoke or flange. The bar will hold the drive pinion in position when the nut is tightened.

(5) Tighten the drive pinion nut to the correct torque value. Refer to page DF02-30.

(6) Remove the yoke or flange bar.

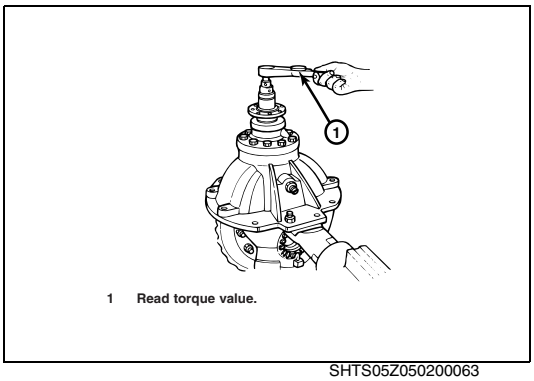


1 Read torque value.

SHTS05Z050200063

(7) Attach a torque wrench on the drive pinion nut. Rotate the drive pinion and read the value indicated on torque wrench.

(8) If the pinion bearing preload or torque is not within 5-45 lb-in (0.56-5.08 N·m) for new pinion bearings or 10-30 lb-in (1.13-3.39 N·m) for used pinion bearings in good condition, remove the pinion and cage assembly from the carrier. Adjust the spacer and repeat Steps (1) to (7).

- **To increase preload:** Install a thinner bearing spacer.
- **To decrease preload:** Install a thicker bearing spacer.

(9) After adjusting pinion bearing preload, remove the drive pinion and bearing cage from the carrier. Refer to page DF02-21.

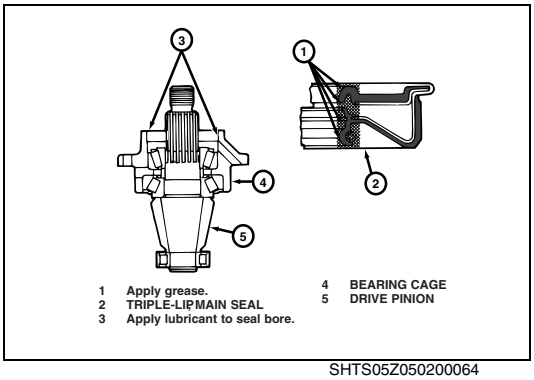


1 Apply grease.
2 TRIPLE-LIP MAIN SEAL
3 Apply lubricant to seal bore.
4 BEARING CAGE
5 DRIVE PINION

SHTS05Z050200064

(10) Install a new triple-lip seal.

**⚠ CAUTION**

**The seal lips must be clean. Dirt and particles may cause a leak between the yoke and the seal.**

a. Apply the same lubricant used in the axle housing to the outer surface of the seal and the seal bore in the bearing cage.

b. Place the drive pinion and cage assembly in a press with the seal bore toward the top.

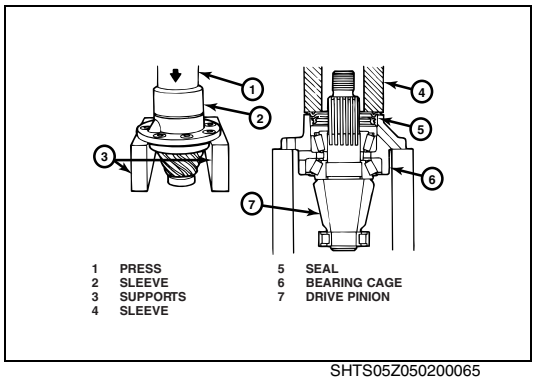


1 PRESS
2 SLEEVE
3 SUPPORTS
4 SLEEVE
5 SEAL
6 BEARING CAGE
7 DRIVE PINION

SHTS05Z050200065

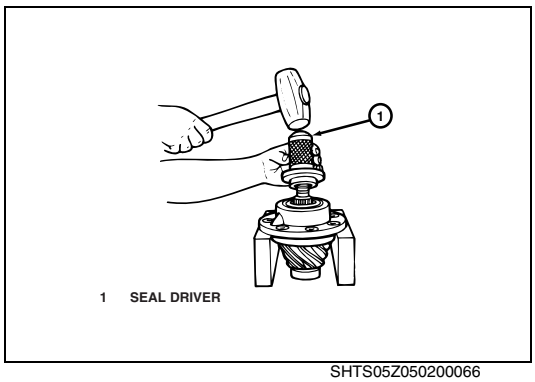


1 SEAL DRIVER

SHTS05Z050200066

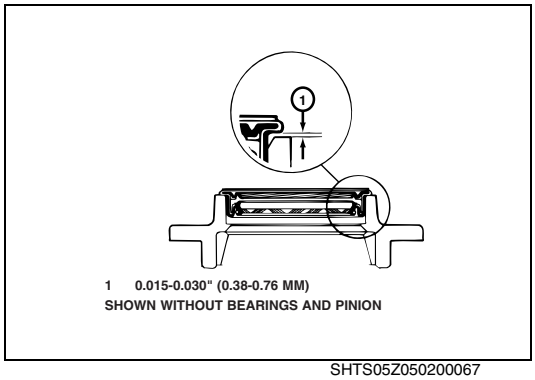


1 0.015-0.030" (0.38-0.76 MM)
SHOWN WITHOUT BEARINGS AND PINION

SHTS05Z050200067

c. Press the seal into the bearing cage. The seal flange must be flat against the top of the bearing cage. Use a sleeve or seal driver of the correct size that fits against the metal seal flange. The diameter of the sleeve or driver must be larger than the flange diameter.

- **If a press is not available:** Use a mallet and the sleeve or driver to install the seal.

d. After the triple-lip seal is installed, a gap of approximately 0.015-0.030-inch (0.38-0.76 mm) between the flange and bearing cage is normal.

e. Check the gap with a feeler gauge at several points around the seal. The gap must be within 0.015-0.030-inch (0.38-0.76 mm). The difference between the largest and smallest gap measurement must not exceed 0.010-inch (0.0254 mm).

## 8. ADJUSTMENT OF SHIM PACK THICKNESS FOR A NEW DRIVE PINION

**NOTICE**

**Use this procedure if you'll install a new drive pinion and ring gear set, or if you have to adjust the depth of the drive pinion.**

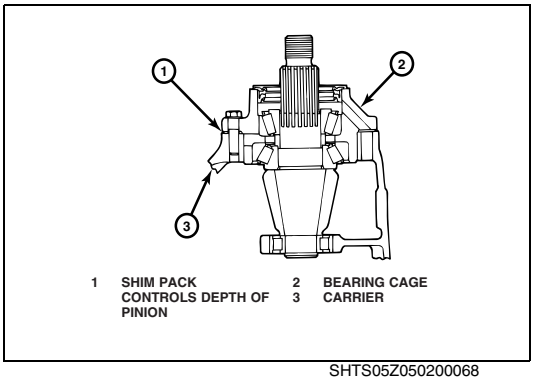


1 SHIM PACK CONTROLS DEPTH OF PINION
2 BEARING CAGE
3 CARRIER

SHTS05Z050200068

(1) Use a micrometer to measure the thickness of the shim pack that was removed from under the pinion cage. Record the measurement.

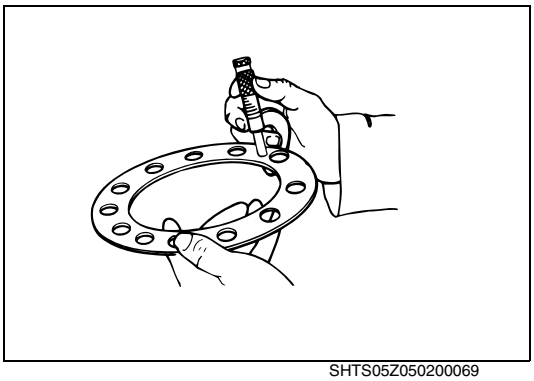

SHTS05Z050200069

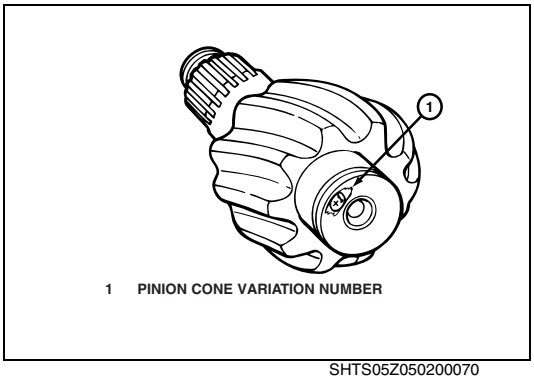


1 PINION CONE VARIATION NUMBER

SHTS05Z050200070

(2) Find the pinion cone (PC) variation number on the drive pinion you'll replace. Record the number. The pinion cone number can be one of the following values.

- PC +3, PC -3, +3 or -3 = 0.003-inch
- PC +.03, PC 0.03 mm, +0.03 mm or -0.03 = 0.03 mm

(3) If you can't find the PC number or it's unreadable, install a new shim pack of the same thickness that you measured in 8. (1).

(4) If the old pinion cone number is a plus (+) number, subtract the number from the old shim pack thickness that was measured in 8. (2).

(5) If the old pinion cone number is a minus (-) number, add the number to the old shim pack thickness that was measured in 8. (2).

(6) Find the pinion cone (PC) variation number on the new drive pinion that will be installed. Record the number.

(7) If the new pinion cone number is a plus (+) number, add the number to the standard shim pack thickness that was calculated in 8. (4) or 8. (5). Use new shims to make a shim pack to the correct thickness. Refer to page DF02-35.

(8) If the new pinion cone number is a minus (-) number, subtract the number from the standard shim pack thickness that was calculated in 8. (4) or 8. (5). Use new shims to make a shim pack to the correct thickness. Refer to page DF02-35.

| Example | Inches | mm |
|---|---|---|
| 1. Old Shim Pack Thickness. Old PC Number, PC +2 inches (+0.05 mm)<br><br>Standard Shim Pack Thickness. New PC Number, PC +5 inches (+0.13 mm)<br><br>New Shim Pack Thickness | 0.030-0.002 = 0.028+0.005 = 0.033 | 0.760-0.050 = 0.710+0.130 = 0.840 |
| 2. Old Shim Pack Thickness Old PC Number, PC -2 inches (-0.05 mm)<br><br>Standard Shim Pack Thickness. New PC Number, PC +5 inches (+0.13 mm)<br><br>New Shim Pack Thickness | 0.030+0.002 = 0.032+0.005 = 0.037 | 0.760+0.050 = 0.810+0.130 = 0.940 |
| 3. Old Shim Pack Thickness Old PC Number, PC -2 inches (-0.05 mm)<br><br>Standard Shim Pack Thickness. New PC Number, PC -5 inches (-0.13 mm)<br><br>New Shim Pack Thickness | 0.030-0.002 = 0.032-0.005 = 0.023 | 0.760-0.050 = 0.710-0.130 = 0.580 |
| 4. Old Shim Pack Thickness Old PC Number, PC -2 inches (-0.05 mm)<br><br>Standard Shim Pack Thickness. New PC Number, PC -5 inches (-0.13 mm)<br><br>New Shim Pack Thickness | 0.030+0.002 = 0.032-0.005 = 0.027 | 0.760+0.050 = 0.810-0.130 = 0.680 |

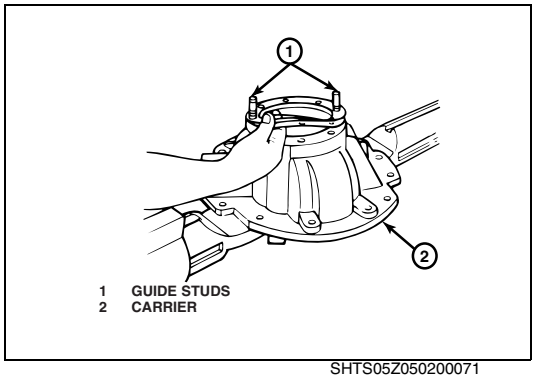


1 GUIDE STUDS
2 CARRIER

SHTS05Z050200071

**9. INSTALLATION OF DRIVE PINION, BEARING CAGE AND SHIM PACK INTO THE CARRIER**

**NOTICE**

**If a new drive pinion and ring gear set is installed, or if the depth of the drive pinion has to be adjusted, calculate the thickness of the shim pack. Refer to the procedure Shim Pack Thickness for a New Drive Pinion on page DF02-34.**

(1) Select the correct shim pack and install it between the bearing cage and carrier.

(2) Apply Loctite® 518 Gasket Eliminator to the carrier face.

(3) Align the oil slots in the shims with oil slots in the bearing cage and carrier. Use guide studs to help align the shims.

(4) Apply Loctite® 518 Gasket Eliminator to the top of the shim pack.

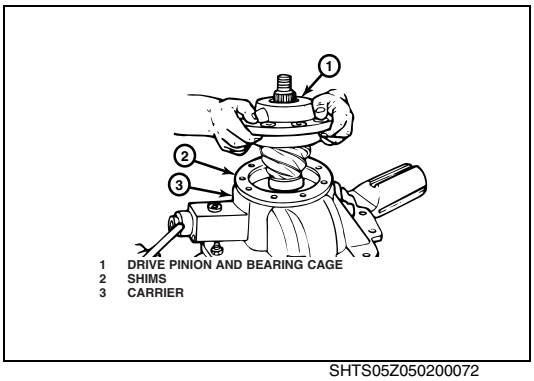


1 DRIVE PINION AND BEARING CAGE
2 SHIMS
3 CARRIER

SHTS05Z050200072

(5) Install the drive pinion and bearing cage into the carrier. If necessary, use a rubber, plastic or leather mallet to hit the assembly into position.

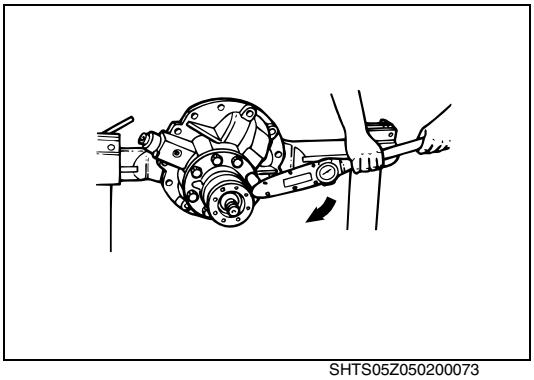

SHTS05Z050200073

(6) Install the bearing cage-to-carrier capscrews and washers. Tighten the capscrews to the correct torque value. Refer to page DF02-12.

## 10. INSTALLATION OF TIGHT FIT YOKES AND POSE™ SEAL

**⚠ CAUTION**
**Do not install tight fit yokes on shafts using a hammer or mallet. Using a hammer or mallet can damage the yoke.**

**The seal lips must be clean. Dirt and particles may cause a leak between the yoke and the POSE™ seal.**

**NOTICE**
**Do not install POSE™ seal all the way against the yoke shoulder. This seal is designed to position itself as yoke is installed.**

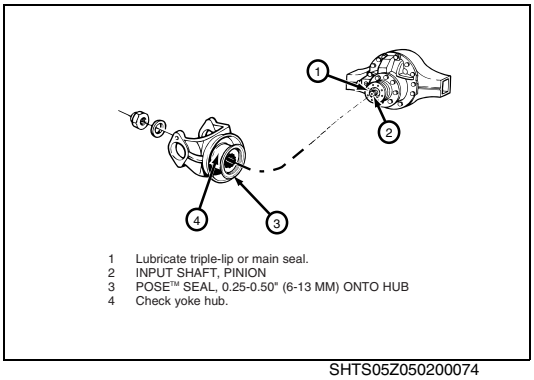


1 Lubricate triple-lip or main seal.
2 INPUT SHAFT, PINION
3 POSE™ SEAL, 0.25-0.50" (6-13 MM) ONTO HUB
4 Check yoke hub.

SHTS05Z050200074

(1) Apply axle lubricant on the yoke seal.

(2) Check all surfaces of the yoke hub for damage.

(3) If the carrier uses a POSE™ seal element, install a new POSE™ seal.
   a. Lightly lubricate the yoke journal with the same lubricant used in the axle housing.
   b. Partially install the POSE™ seal onto the yoke 0.25-0.5-inch (6-13 mm).
   c. Before installing the yoke onto the drive pinion, lubricate the yoke with the same lubricant used in the axle housing.

(4) Slide the yoke over the input shaft pinion. Align the yoke splines with the shaft splines.

**⚠ CAUTION**
**Do not use a hammer or mallet to install the yoke to the input pinion shaft. Using a hammer or mallet can damage the yoke or flange.**

(5) Install the input yoke flange onto the drive pinion shaft. The yoke or flange must be fully seated against the outer differential bearing before the nut is tightened to specifications.

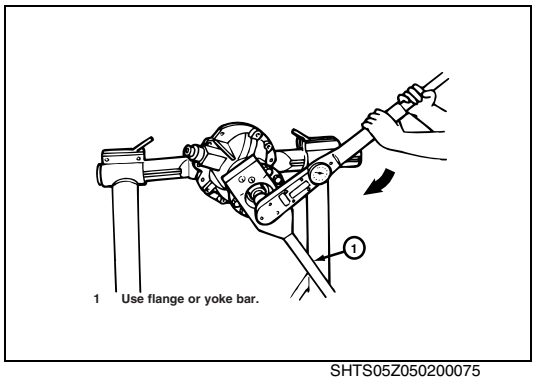


SHTS05Z050200075

(6) Install the drive pinion nut and washer on the input pinion shaft and against the yoke collar. Tighten the nut against yoke collar to torque specifications. Refer to page DF02-12.

## 11. INSTALLATION OF ANY TYPE YOKE WITH A UNITIZED PINION SEAL (UPS)

**NOTICE**

**Once the yoke is partially or fully installed and then removed for any reason, the unitized pinion seal will be damaged and unusable. If the yoke and unitized pinion seal are removed after partial or full installation, remove and discard the original unitized pinion seal and replace it with another new unitized pinion seal.**

**If the inner sleeve of the seal is removed, the seal is not usable. A new seal is required. This will occur if a yoke is installed into the seal and then removed.**

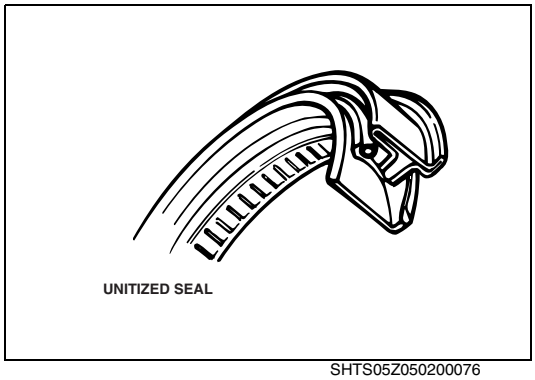


SHTS05Z050200076

(1) Remove the replacement unitized seal from the package.

(2) Select the correct seal driver from page DF02-38. Each seal driver is designed to correctly install a specific diameter seal. To determine the yoke seal diameter, measure the yoke journal. Refer to page DF02-38.

(3) Position the seal on the driver.

**⚠ CAUTION**

**Use a rubber mallet to install the seal. Do not use a steel, brass or plastic hammer. Damage to the seal and driver tool can result.**

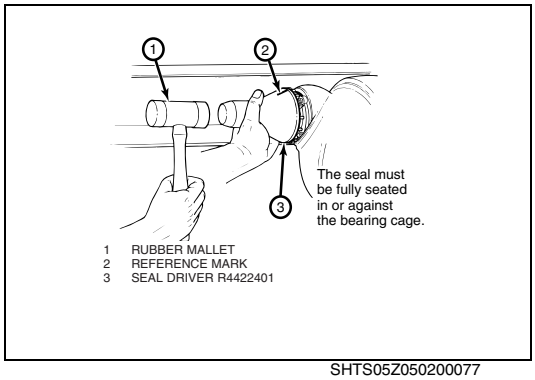


SHTS05Z050200077

(4) Use a rubber mallet to drive the seal into or against the bearing cage. The seal must fully seat into or against the bearing cage.

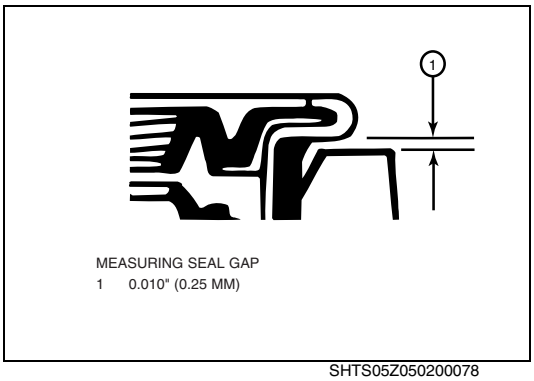


MEASURING SEAL GAP
1 0.010" (0.25 MM)

SHTS05Z050200078

(5) Use a 0.010-inch (0.25 mm) shim to check for clearance between the entire seal flange circumference and the bearing cage.

- **If the 0.010-inch (0.25 mm) shim slides between the seal flange and bearing cage:** Correctly position the seal driver and drive the seal into the bore until the 0.010-inch (0.25 mm) shim cannot slide between the seal flange and bearing cage at any point around the seal flange.

**Unitized Pinion Seals and Seal Drivers**

| Single Models | Meritor Unitized Pinion Seal | Seal Installation Location | Meritor Seal Driver | Yoke Seal Diameter Inches |
|---|---|---|---|---|
| RS17-145<br>RS19-145<br>RS21-145<br>RS23-160 | A-1205-N-2588 | Single Rear Input — 145 models | R4422401 | 3.000<br>3.005 |
| | A-1205-Q-2591 | Single Rear Input — 160 models | R4422402 | 3.250<br>3.225 |
| To obtain Meritor seal driver KIT 4454, refer to page DF02-9 | | | | |

**12. CLEAN, INSPECT AND INSTALL THE YOKE AFTER INSTALLING A UNITIZED PINION SEAL**

**⚠ WARNING**
**Solvent cleaners can be flammable, poisonous and cause burns. Examples of solvent cleaners are carbon tetrachloride, and emulsion-type and petroleum-base cleaners. Read the manufacturer's instructions before using a solvent cleaner, then carefully follow the instructions. Also follow the procedures below.**

- **Wear safe eye protection.**
- **Wear clothing that protects your skin.**
- **Work in a well-ventilated area.**
- **Do not use gasoline, or solvents that contain gasoline. Gasoline can explode.**
- **You must use hot solution tanks or alkaline solutions correctly. Read the manufacturer's instructions before using hot solution tanks and alkaline solutions. Then carefully follow the instructions. safe eye protection.**

(1) Use a clean shop towel and a safe cleaning solvent to clean the ground and polished surface of the yoke journal. Do not use gasoline, abrasive cleaners, towels, or scrubbers to clean the yoke. Do not attempt to polish the yoke.

**NOTICE**
**The unitized seal features a rubber inner sleeve that is designed to seal and rotate with the yoke. This feature allows you to reuse a yoke with minor grooves.**

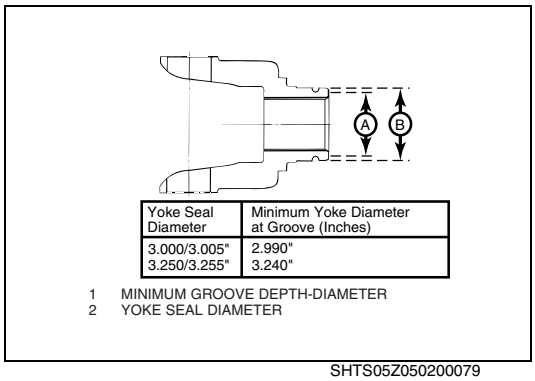


| Yoke Seal Diameter | Minimum Yoke Diameter at Groove (Inches) |
|---|---|
| 3.000/3.005" | 2.990" |
| 3.250/3.255" | 3.240" |

1 MINIMUM GROOVE DEPTH-DIAMETER
2 YOKE SEAL DIAMETER

SHTS05Z050200079

(2) Inspect the yoke seal surface for grooves.

- **If you find grooves on the yoke:** Use calipers to measure the groove diameters. If any groove diameter measures less than the dimensions shown in figure, replace the yoke.

**⚠ CAUTION**
**Do not install a POSE™ seal after you install a unitized pinion seal. The use of a POSE™ seal will prevent correct seating of the unitized pinion seal on the yoke and can result in lubricant leakage at the seal. POSE™ seal installation is recommended only for triple lip and other previous design seals. Damage to components can result.**

**Do not use thin metal wear sleeves to refresh the yoke surface. Wear sleeves pressed onto the yoke can prevent correct seating of the pinion seal, damage the pinion seal assembly and can cause the seal to leak. Damage to components can result.**

(3) Before you install the yoke, lightly lubricate or coat the yoke seal journal with axle oil.
(4) Align the yoke splines with the shaft splines. Slide the yoke over the shaft spline.

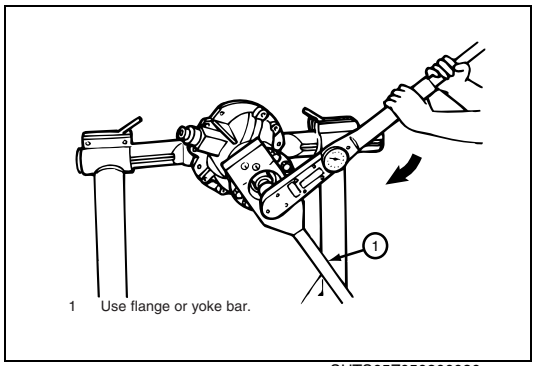


1 Use flange or yoke bar.

SHTS05Z050200080

**⚠ CAUTION**
**Do not use a hammer or mallet to install the yoke to the input pinion shaft. Using a hammer or mallet can damage the yoke or flange.**

(5) Install the input yoke flange onto the drive pinion shaft. The yoke or flange must be fully seated against the outer differential bearing before the nut is torqued to specifications.
(6) Install the drive pinion nut, and washer if required, on the input pinion shaft and against the yoke collar. Tighten the nut against yoke collar to torque specifications. Refer to page DF02-12.

### 13. ASSEMBLY OF MAIN DIFFERENTIAL AND RING GEAR ASSEMBLY

**⚠ CAUTION**
**Heat the ring gear before seating it onto the differential case. Do not press a cold ring gear on the flange case half. A cold ring gear will damage the case half because of the tight fit.**

(1) Heat the ring gear in a tank of water to a temperature of 160°F-180°F (71°C-82°C) for 10 to 15 minutes.

**⚠ WARNING**
**Wear safe clothing and gloves when working with the hot ring gear to prevent serious personal injury.**

(2) Use a lifting tool to safely lift the ring gear from the tank of water.
(3) Install the ring gear on the flange case half immediately after the gear is heated.

- If the ring gear does not fit easily on the case half: Heat the gear again.

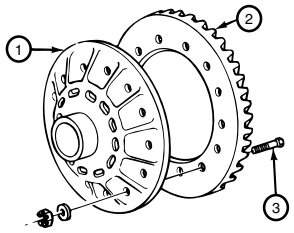


1 FLANGE CASE HALF
2 RING GEAR
3 BOLT HEAD AGAINST GEAR

SHTS05Z050200081

(4) Align the ring gear and the flange case half fastener holes. Rotate the ring gear as necessary.

**NOTICE**
**If rivets were used to hold the ring gear to the flange case half, replace them with bolts, nuts and washers.**

(5) Install the bolts, nuts and washers that hold the ring gear to the flange case half. Install the bolts from the gear side of the assembly. The bolt heads must be against the ring gear.

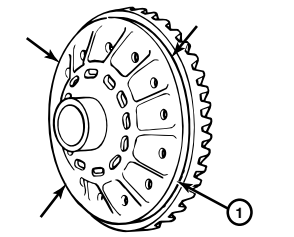


**1 Check for 0.003" (0.08 mm) gap at four locations.**

SHTS05Z050200082

(6) Tighten the bolts and nuts to the correct torque value. Refer to page DF02-12.

(7) Use a 0.003-inch (0.08 mm) feeler gauge to check for gaps between the back surface of the ring gear and the case flange. Check for gaps at four points around the assembly.

- **If the gaps exceed specifications:** Check the flange case half and ring gear for the problem that causes the gap. Repair or replace parts. Assemble the ring gear on the flange case half. Repeat the procedure in Tight Fit Yokes and POSE$^{TM}$ Seal. Refer to page DF02-36.

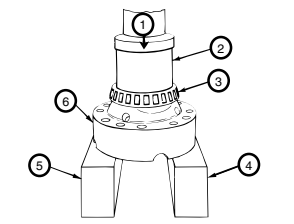


1 PRESS
2 SLEEVE
3 BEARING CONE
4 SUPPORT
5 SUPPORT
6 CASE HALF

SHTS05Z050200083

(8) Use a press and the correct size sleeve to install the bearing cones on both of the case halves.

(9) Apply axle lubricant on the inside surfaces of both case halves, spider or cross, thrust washers, side gears and differential pinions.

(10) Place the flange case half on a bench with the ring gear teeth toward the top.

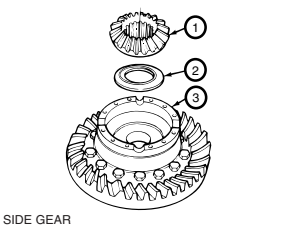


1 SIDE GEAR
2 THRUST WASHER
3 FLANGE CASE HALF

SHTS05Z050200084

(11) Install one thrust washer and side gear into the flange case half.

**⚠ CAUTION**
**The side gears in some carrier models have hubs of different lengths. Install the correct length side gear into the flange case half. Otherwise, damage to components can result.**

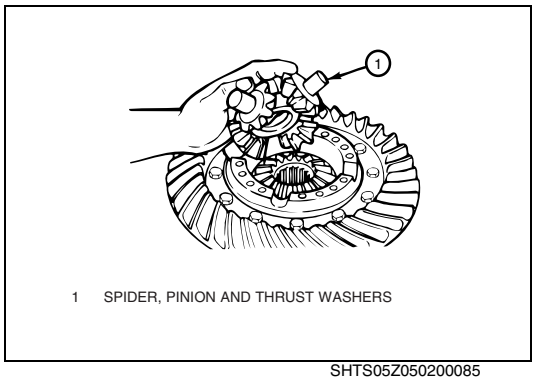


1 SPIDER, PINION AND THRUST WASHERS

SHTS05Z050200085

(12) Install the spider or cross, differential pinions and thrust washers into the flange case half.

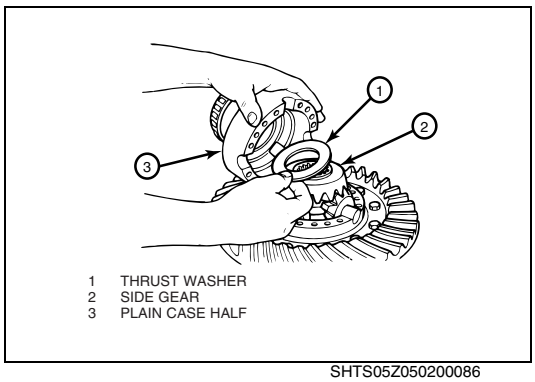


1 THRUST WASHER
2 SIDE GEAR
3 PLAIN CASE HALF

SHTS05Z050200086

(13) Install the second side gear and thrust washer over the spider and differential pinions.

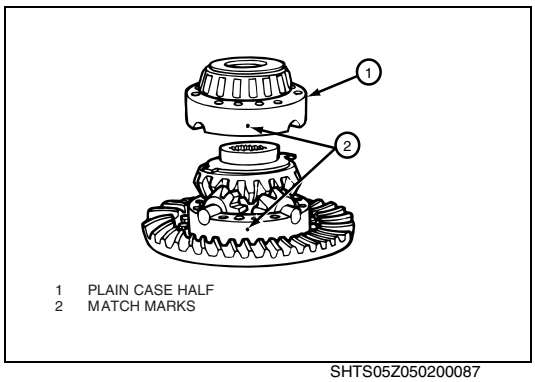


1 PLAIN CASE HALF
2 MATCH MARKS

SHTS05Z050200087

(14) Place the plain half of the differential case over the flange half and gears. Rotate the plain half to align the match marks.

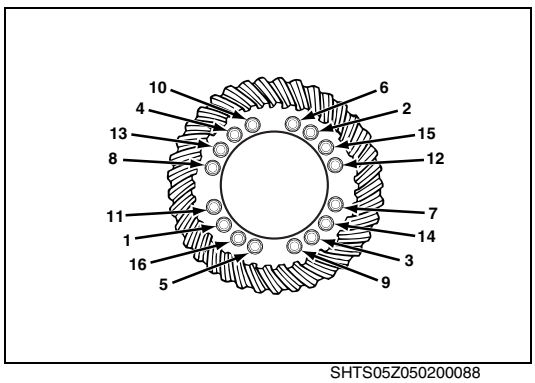


SHTS05Z050200088

(15) Install Dri-Loc fasteners into the case halves. Refer to page DF02-58.

a. Install four capscrews and washers or bolts, nuts and washers, if equipped, into the case halves. The distance between the fasteners must be equal. Tighten the fasteners to the correct torque value in a progressive criss-cross pattern opposite each other. Refer to page DF02-12.
b. Install the other fasteners into the case halves. Tighten the fasteners to the correct torque value. Refer to page DF02-12.

(16) Check the differential gears rotating resistance.

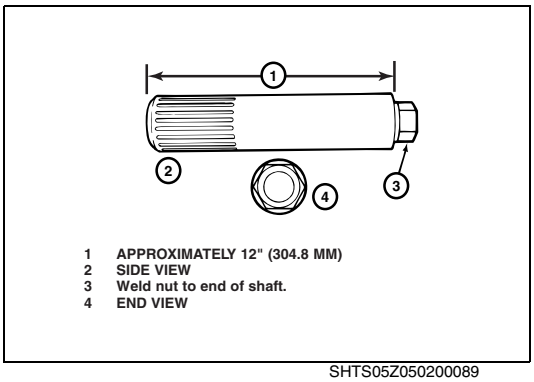


1 APPROXIMATELY 12" (304.8 MM)
2 SIDE VIEW
3 Weld nut to end of shaft.
4 END VIEW

SHTS05Z050200089

**14. DIFFERENTIAL GEARS ROTATING RESISTANCE CHECK**

(1) Make an inspection tool using an axle shaft that matches the spline size of the differential side gear. Cut the shaft to approximately 12-inches (304.8 mm). Weld a nut onto the end of the shaft.

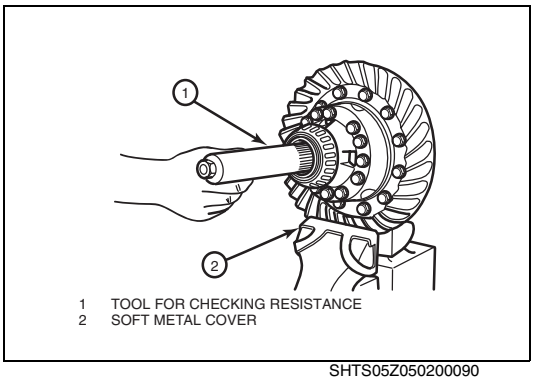


1 TOOL FOR CHECKING RESISTANCE
2 SOFT METAL COVER

SHTS05Z050200090

(2) Place the differential and ring gear assembly in a vise. Install soft metal covers over vise jaws to protect the ring gear.

(3) Install the tool into the differential until the splines of the tool are engaged with one side gear.

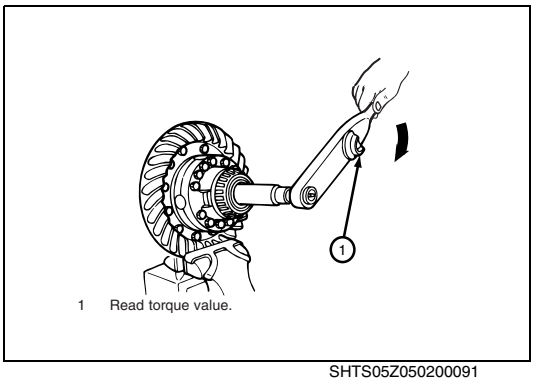


1 Read torque value.

SHTS05Z050200091

(4) Place a torque wrench onto the nut of the tool and rotate the differential gears. As the differential gears rotate, read the value indicated on the torque wrench.

- **If the torque value exceeds 50 lb-ft (67.8 N·m):** Disassemble the differential gears from the case halves. Inspect the case halves, spider, gears and thrust washers. Repair or replace parts. Assemble the parts and repeat 14. (2) to (4).

**15. INSTALLATION OF DIFFERENTIAL AND RING GEAR ASSEMBLY**

(1) Clean and dry the bearing cups and bores of the carrier legs and bearing caps.

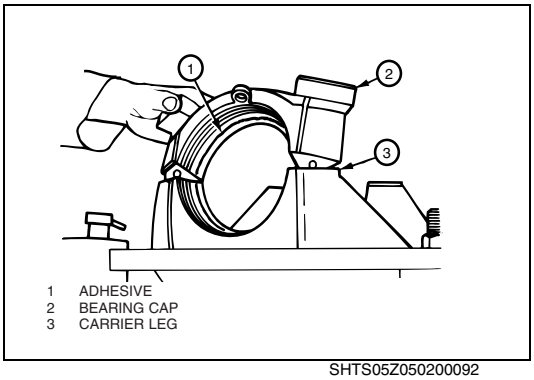


1 ADHESIVE
2 BEARING CAP
3 CARRIER LEG

SHTS05Z050200092

(2) Apply axle lubricant on the inner diameter of the bearing cups and on both bearing cones that are assembled on the case halves.

(3) Apply adhesive into the bearing bores of the carrier legs and bearing caps. Adhesive must not contact the adjusting ring threads. Refer to page DF02-59.

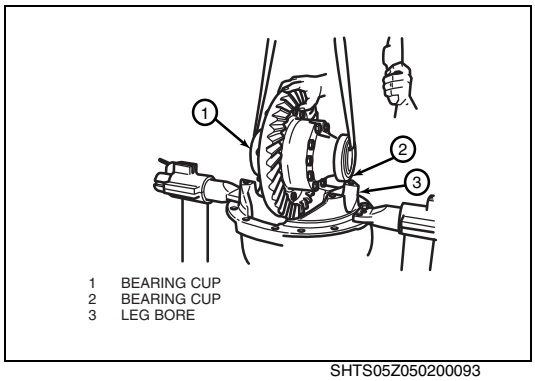


1 BEARING CUP
2 BEARING CUP
3 LEG BORE

SHTS05Z050200093

(4) Install the bearing cups over the bearing cones that are assembled on the case halves.

(5) Safely lift the differential and ring gear assembly and install it into the carrier. The bearing cups must be flat against the bores between the carrier legs.

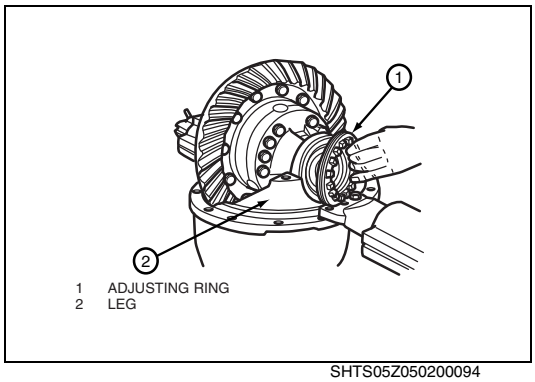


1 ADJUSTING RING
2 LEG

SHTS05Z050200094

(6) Install both of the bearing adjusting rings into position between the carrier legs. Turn each adjusting ring hand-tight against the bearing cup.

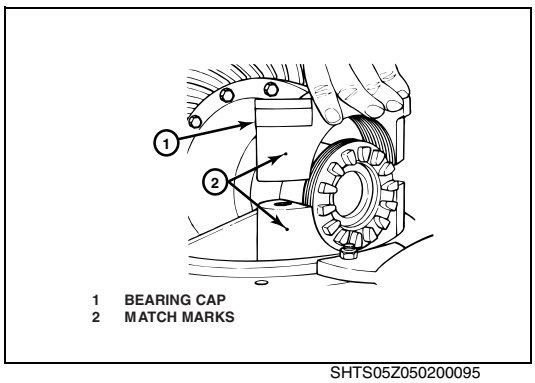


**1 BEARING CAP**
**2 MATCH MARKS**

SHTS05Z050200095

(7) Install the bearing caps over the bearings and adjusting rings. Align the match marks you made when you removed the caps.

**⚠ CAUTION**
**If bearing caps are not installed in correct locations, the bores and threads in caps will not match the carrier. You will have problems assembling the caps on the carrier and damage to parts can occur. Do not force the bearing caps into position.**

(8) Seat each bearing cap with a light leather, plastic or rubber mallet. The caps must fit easily against the bearings, adjusting rings and carrier. Do not force the bearing caps into position.

- **If bearing caps do not correctly fit into position:** Check the alignment of match marks between caps and carrier. Remove the caps and repeat 15. (6) to (8).

(9) Install the capscrews and washers that hold bearing caps to the carrier. Hand-tighten the capscrews four to six turns. Tighten the capscrews to the correct torque value. Refer to page DF02-12.

**NOTICE**
**Do not install the cotter keys, pins or lock plates, if equipped, that hold the bearing adjusting rings in position.**

(10) Adjust differential bearing preload and hypoid gear backlash. Check the tooth contact patterns.

### 16. ADJUST DIFFERENTIAL BEARING PRELOAD

| | | |
|---|---|---|
| **Differential Bearing Preload** | **All Carrier Models** | **15-35 lb-in (1.7-3.9 N·m)** |
| **Expansion between bearing caps** | **RS-145 and RS-160 carrier models** | **0.002-0.009-inch (0.05-0.229 mm)** |

### 17. METHOD 1

(1) Attach a dial indicator onto the carrier mounting flange so that the plunger or pointer is against the ring gear back surface.

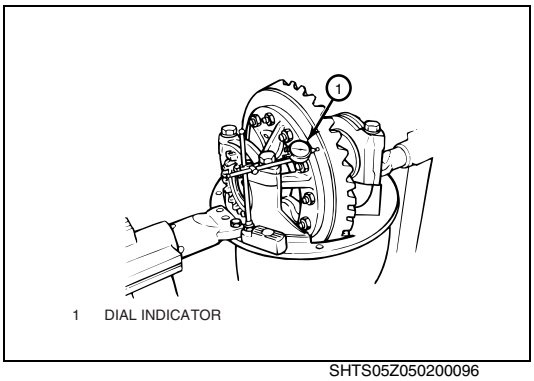


1 DIAL INDICATOR

SHTS05Z050200096

**⚠ CAUTION**

**When you turn the adjusting rings, always use a tool that engages two or more opposite notches in the ring. A T-bar wrench can be used for this purpose. If the tool does not correctly fit into the notches, damage to the lugs will occur.**

(2) Use a T-bar wrench to loosen the bearing adjusting ring that is opposite the ring gear. A small amount of end play will show on the dial indicator.

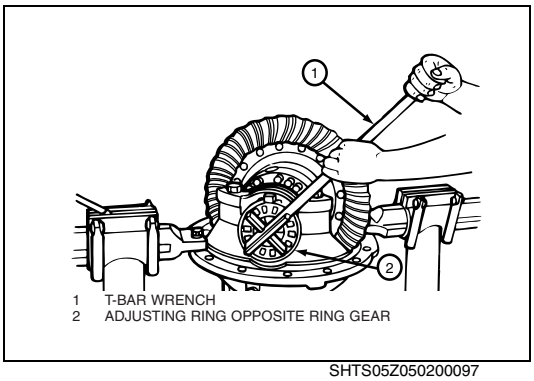


1 T-BAR WRENCH
2 ADJUSTING RING OPPOSITE RING GEAR

SHTS05Z050200097

(3) Use one of the following methods to move the differential and ring gear to the left and right while you read the dial indicator.

a. Insert two pry bars between the bearing adjusting rings and ends of the differential case. The pry bars must not touch the differential bearings.
b. Insert two pry bars between the differential case or ring gear and the carrier at locations other than described in (3) a. The pry bars must not touch the differential bearings.

(4) Tighten the bearing adjusting ring until the dial indicator reads ZERO end play. Move the differential and ring gear to the left and right as needed. If necessary, repeat (3) a. or b.

(5) Tighten each bearing adjusting ring one notch from ZERO.

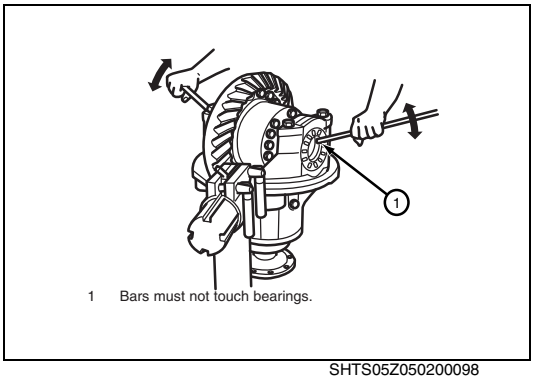


1 Bars must not touch bearings.

SHTS05Z050200098

(6) Proceed to check ring gear runout.

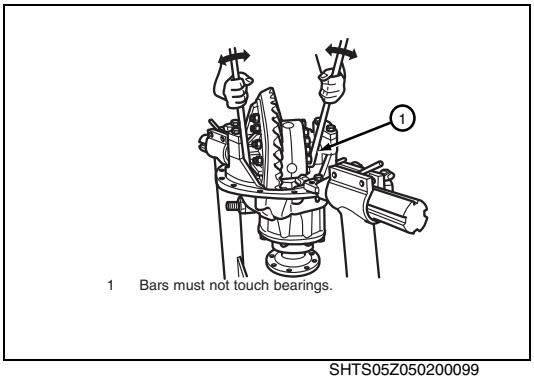


1 Bars must not touch bearings.

SHTS05Z050200099

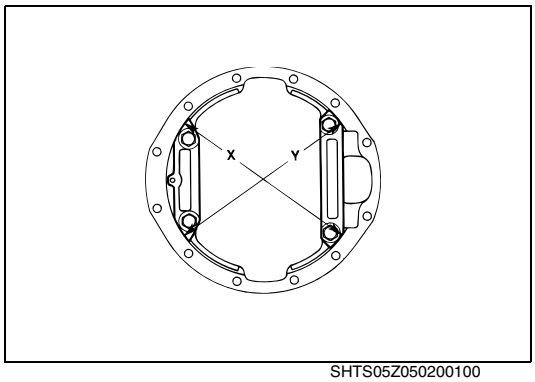


SHTS05Z050200100

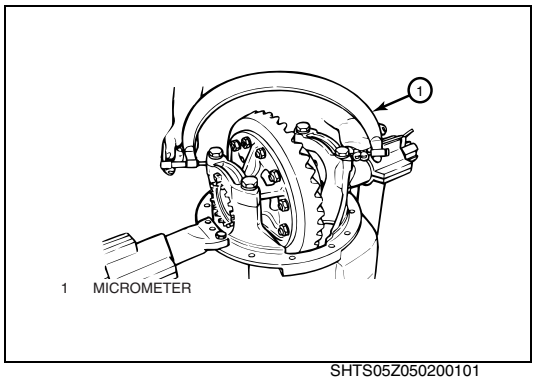


SHTS05Z050200101

**18. METHOD 2**

(1) Hand-tighten both adjusting rings against the differential bearings.

(2) Use a micrometer to measure distance X or Y between the opposite surfaces of the bearing caps. Record the measurement.

(3) Tighten each bearing adjusting ring one notch.

(4) Measure distance X or Y again. Compare the measurement with the one you obtained in 18. (2). The difference between the two dimensions is the amount the bearing caps have expanded.

**Example**

- Measurements of RS-145 carrier
- Distance X or Y
  — before tightening adjusting rings = 13.927-inch (353.74 mm).
- Distance X or Y
  — after tightening adjusting rings = 13.936-inch (353.97 mm).
- 13.936-inch – 13.927-inch = 0.009-inch 0.23 mm) difference.
- **If the dimension is within specifications:**
  Continue by checking ring gear runout.
- **If the dimension is less than specifications:**
  Repeat 18(3) and 18(4) as needed.

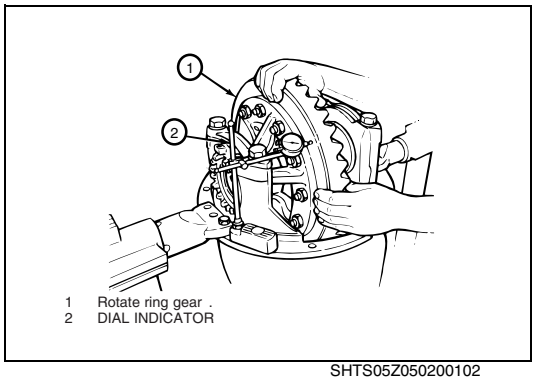


SHTS05Z050200102

**19. CHECK RING GEAR RUNOUT**

(1) Attach a dial indicator onto the carrier mounting flange.

(2) Adjust the dial indicator so that the plunger or pointer is against the back surface of the ring gear. Set the dial indicator to ZERO.

(3) Rotate the differential and ring gear. Read the dial indicator. Runout must not exceed 0.008-inch (0.20 mm).

- **If runout exceeds specifications:** Remove the differential and ring gear assembly from the carrier. Refer to Differential and Ring Gear from the Carrier on page DF02-18 and 19. (4) and (5).
- **If runout is within specifications:** Proceed to Ring Gear Backlash Adjustment.

(4) Check the differential parts including the carrier for wear and damage. Repair or replace parts.

(5) Install the differential and ring gear into the carrier. Refer to page DF02-42. Repeat the preload adjustment of the differential bearings.

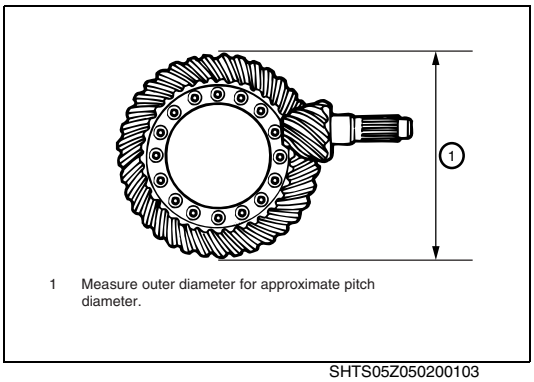


1 Measure outer diameter for approximate pitch diameter.

SHTS05Z050200103

## 20. RING GEAR BACKLASH ADJUSTMENT

| Ring Gear Pitch Diameter | Range of Backlash Setting | Backlash Setting for New Gear Sets |
|---|---|---|
| Less than 17-inches (431.8 mm) | 0.008-0.018-inch (0.20-0.46 mm) | 0.012-inch (0.30 mm) |
| Greater than 17-inches (431.8 mm) | 0.010-0.020-inch (0.25-0.51 mm) | 0.015-inch (0.38 mm) |

Measure the outer diameter of ring gear for approximate pitch diameter.

- **If the old gear set is installed:** Adjust the backlash to the setting that was measured before the carrier was disassembled.
- **If a new gear set is installed:** Adjust the backlash to the correct specification for new gear sets.

After checking the tooth contact patterns, the backlash can be adjusted within specification limits, if needed. To change the location of the pattern use the following procedures.

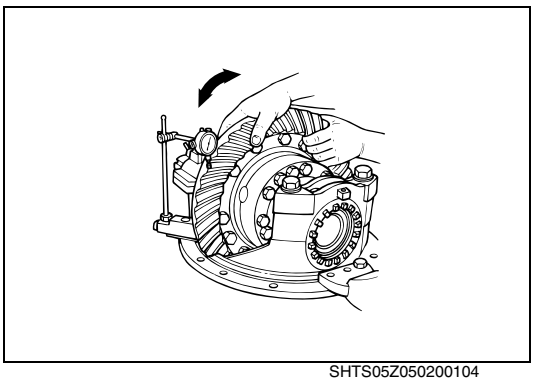

SHTS05Z050200104

(1) Attach a dial indicator onto the mounting flange of the carrier.

(2) Adjust the dial indicator so that the plunger or pointer is against the tooth surface.

(3) Adjust the indicator dial to ZERO. Hold the drive pinion in position.

(4) After reading the dial indicator, rotate the differential and ring gear a small amount in both directions against the drive pinion teeth.

- **If the backlash reading is within specifications:** Check the tooth contact patterns.
- **If the backlash reading is not within specifications:** Adjust backlash as needed.

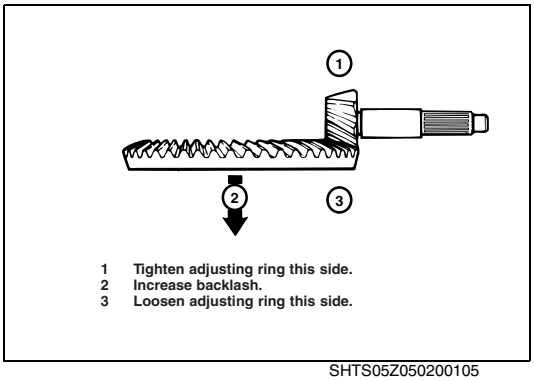


1 Tighten adjusting ring this side.
2 Increase backlash.
3 Loosen adjusting ring this side.

SHTS05Z050200105

(5) Loosen one bearing adjusting ring one notch then tighten the opposite ring the same amount.

- **To increase backlash:** Move the ring gear away from the drive pinion.

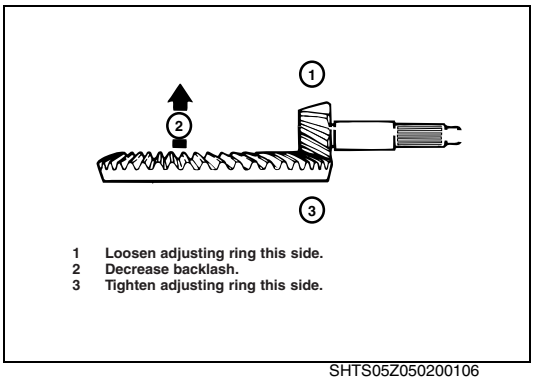


1 Loosen adjusting ring this side.
2 Decrease backlash.
3 Tighten adjusting ring this side.

SHTS05Z050200106

- **To decrease backlash:** Move the ring gear toward the drive pinion.

**NOTICE**

**When you adjust backlash, move the ring gear only. Do not move the drive pinion.**

(6) Repeat 20. (2) to (5) until the backlash is within specifications.

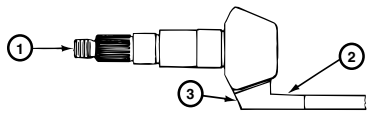


1 PART NUMBER
2 PART NUMBER
3 PART NUMBER OPTION

SHTS05Z050200107

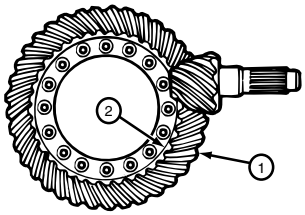


1 HEEL
2 TOE

SHTS05Z050200108

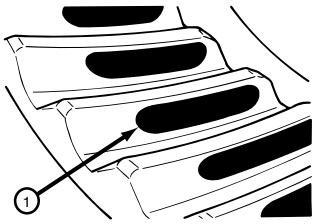


1 DRIVE SIDE, CONVEX

SHTS05Z050200109

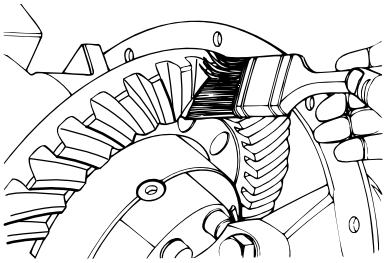

SHTS05Z050200110

## 21. CHECK GEAR SET TOOTH CONTACT PATTERNS (BACKLASH)

Some Meritor carriers have a generoid hypoid gear set. The tooth contact patterns for each type of gear set are different. Check the part numbers to determine what type of gear set is in the carrier. Refer to figure for the location of part numbers.

**Example**

Part numbers for generoid gear sets

- 36786-K or 36786-K2 for the ring gear
- 36787-K or 36787-K2 for the drive pinion

In the following procedures, movement of the contact pattern in the length of the tooth is indicated as toward the heel or toe of the ring gear.

Always check tooth contact patterns on the drive side of the gear teeth.

(1) Adjust the backlash of a new gear set to either 0.012-inch (0.305 mm) or 0.015-inch (0.380 mm) depending on the size of the ring gear. Adjust the backlash of an old gear set to the setting that you measured before the carrier was disassembled. Refer to page DF02-46.

(2) Apply a marking compound onto approximately 12 gear teeth of the ring gear. Rotate the ring gear so that the 12 gear teeth are next to the drive pinion.

(3) Rotate the ring gear forward and backward so that the 12 gear teeth go past the drive pinion six times to get the contact patterns. Repeat if needed to get a clearer pattern.

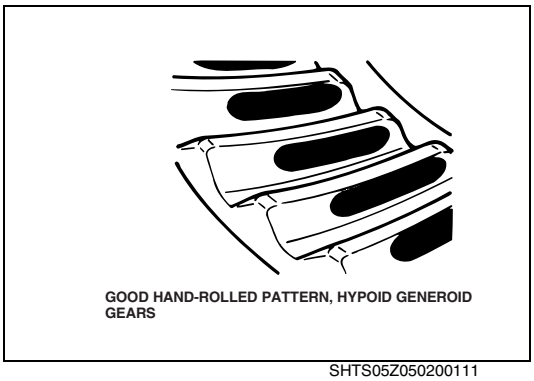

GOOD HAND-ROLLED PATTERN, HYPOID GENEROID GEARS

SHTS05Z050200111

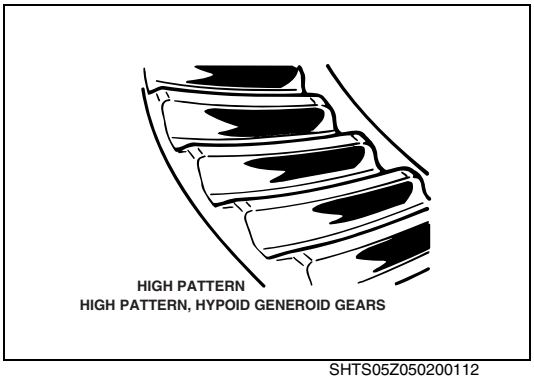

HIGH PATTERN
HIGH PATTERN, HYPOID GENEROID GEARS

SHTS05Z050200112

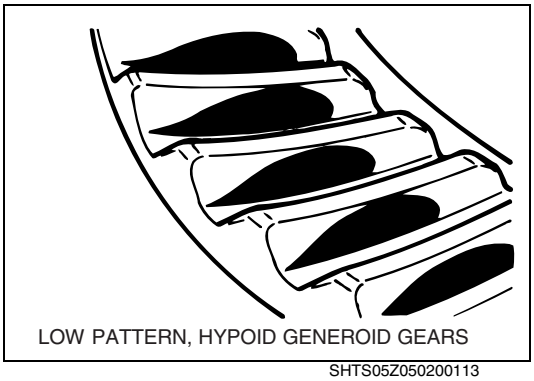

LOW PATTERN, HYPOID GENEROID GEARS

SHTS05Z050200113

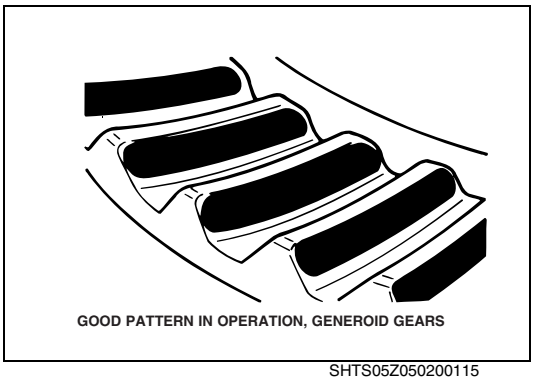

GOOD PATTERN IN OPERATION, GENEROID GEARS

SHTS05Z050200115

(4) Look at the contact patterns on the ring gear teeth. Compare the patterns to figures.

The location of good hand-rolled contact patterns for new conventional and generoid gear sets is toward the toe of the gear tooth and in the center between the top and bottom of the tooth.

When the carrier is operated, a good pattern will extend approximately the full length of the gear tooth. The top of the pattern will be near the top of the gear tooth.

The location of a good hand-rolled contact pattern for an old gear set must match the wear pattern in the ring gear. The new contact pattern will be smaller in area than the old wear pattern.

A high contact pattern indicates that the drive pinion was not installed deep enough into the carrier. A low contact pattern indicates that the drive pinion was installed too deep in the carrier.

- **If the contact patterns require adjustment:** Continue by following 21. (5) to move the contact patterns between the top and bottom of the gear teeth.
- **If the contact patterns are in the center of the gear teeth:** Continue by following 21. (6).

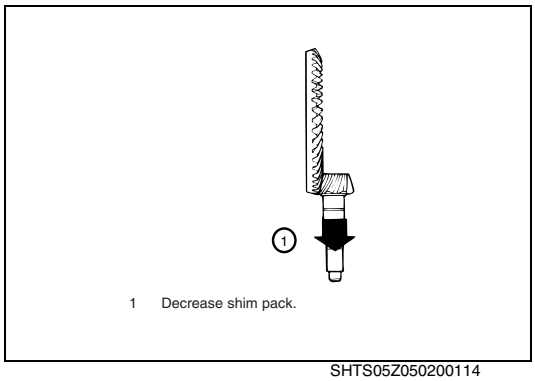


1 Decrease shim pack.

SHTS05Z050200114

(5) Change the thickness of the shim pack under the bearing cage to move the contact patterns between the top and bottom of the gear teeth. Use the following procedure.

a. Remove the drive pinion and bearing cage from the carrier. Refer to Drive Pinion and Bearing Cage from the Carrier on page DF02-21.

- **To correct a high contact pattern:** Decrease the thickness of the shim pack under the bearing cage. When decreasing the thickness of the shim pack, the drive pinion will move toward the ring gear.
- **To correct a low contact pattern:** Increase the thickness of shim pack under the bearing cage. When increasing the thickness of the shim pack, the drive pinion will move away from the ring gear.

b. Install the drive pinion, bearing cage and shims into the carrier. Refer to page DF02-34 in this section.

c. Repeat 21. (2) to (5) until the contact patterns are in the center between the top and bottom of the gear teeth.

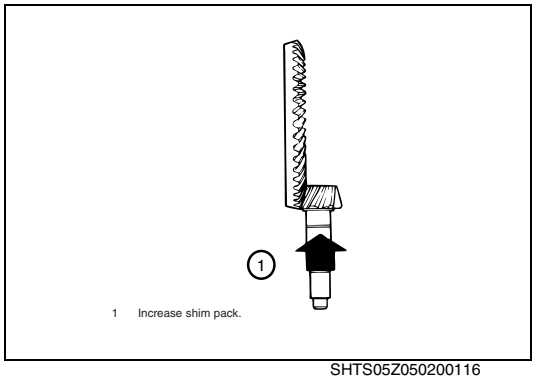


1 Increase shim pack.

SHTS05Z050200116

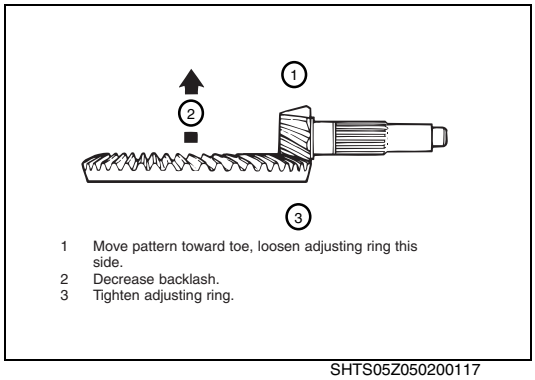


1 Move pattern toward toe, loosen adjusting ring this side.
2 Decrease backlash.
3 Tighten adjusting ring.

SHTS05Z050200117

(6) Adjust backlash of the ring gear within the specification range to move the contact patterns to the correct location in the length of the gear teeth. Refer to page DF02-46.

a. Decrease backlash to move the contact patterns toward the toe of the ring gear teeth.

b. Increase backlash to move the contact patterns toward the heel of the ring gear teeth.

c. Repeat 21. (2) to (4) and 21. (6) until the contact patterns are at the correct location in the length of the gear teeth.

**⚠ CAUTION**

**If the carrier has cotter keys, lock the adjusting rings only with cotter keys. If the carrier has roll pins, reuse the roll pins or lock the adjusting rings with cotter keys. Do not force a roll pin into a cotter key hole. Damage to components can result.**

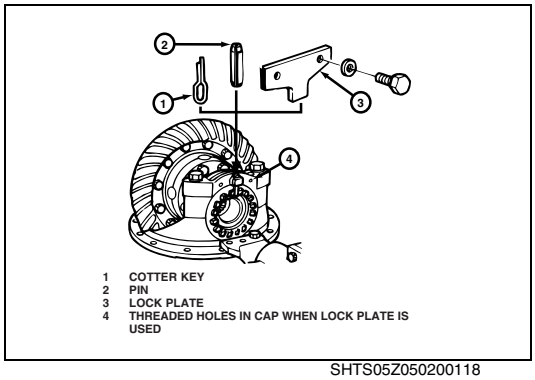


1 COTTER KEY
2 PIN
3 LOCK PLATE
4 THREADED HOLES IN CAP WHEN LOCK PLATE IS USED

SHTS05Z050200118

(7) Install the cotter keys, pins, or lock plates, if equipped, that hold the two bearing adjusting rings in position. Use the following procedures.

a. Install cotter keys between the lugs of the adjusting ring and through the boss of the bearing cap. Bend the two ends of the cotter key around the boss.

b. Use a drift and hammer to install the pin through the boss of the bearing cap until the pin is between the lugs of the adjusting ring.

c. Install the lock plate on the bearing cap so that the tab is between the lugs of the adjusting ring. Install the two capscrews that hold the lock plate to the bearing cap. Tighten the capscrews to correct torque value. Refer to page DF02-12.

**22. ADJUST THE THRUST SCREW**

(1) Rotate the carrier in the repair stand until the back surface of ring gear is toward the top.

(2) Install the jam nut on the thrust screw, if equipped, one half the distance between both ends.

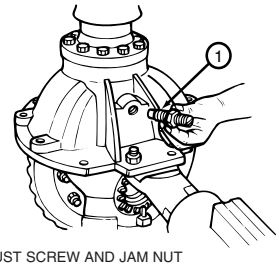


1 THRUST SCREW AND JAM NUT

SHTS05Z050200119

(3) Install the thrust screw. Clearance between the thrust screw and the ring gear must be 0.025-0.045-inch (0.65-1.14 mm).

(4) Loosen the thrust screw 1/2 turn, 180 degrees.

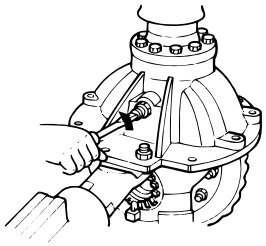

**1 Loosen thrust screw 1/2 turn.**

SHTS05Z050200120

(5) Tighten the jam nut, if equipped, to the correct torque value against the carrier. Refer to page DF02-12.

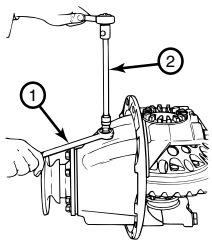


1 Hold thrust screw in position.
2 Tighten jam nut to correct torque value.

SHTS05Z050200121

### 23. INSTALLATION OF DIFFERENTIAL CARRIER INTO AXLE HOUSING

**⚠ WARNING**

**When you apply some silicone gasket materials, a small amount of acid vapor is present. To prevent serious personal injury, ensure that the work area is well-ventilated. Read the manufacturer's instructions before using a silicone gasket material, then carefully follow the instructions. If a silicone gasket material gets into your eyes, follow the manufacturer's emergency procedures. Have your eyes checked by a physician as soon as possible.**

**Solvent cleaners can be flammable, poisonous and cause burns. Examples of solvent cleaners are carbon tetrachloride, and emulsion-type and petroleum-base cleaners. Read the manufacturer's instructions before using a solvent cleaner, then carefully follow the instructions. Also follow the procedures below.**

- **Wear safe eye protection.**
- **Wear clothing that protects your skin.**
- **Work in a well-ventilated area.**
- **Do not use gasoline, or solvents that contain gasoline. Gasoline can explode.**
- **You must use hot solution tanks or alkaline solutions correctly. Read the manufacturer's instructions before using hot solution tanks and alkaline solutions. Then carefully follow the instructions.**

(1) Use a cleaning solvent and rags to clean the inside of the axle housing and the carrier mounting surface. Refer to page DF02-54.
(2) Inspect the axle housing for damage. Repair or replace the axle housing.
(3) Check for loose studs, if equipped, in the mounting surface of the housing where the carrier fastens. Remove and clean the studs that are loose.
(4) Apply liquid adhesive to the threaded holes. Install the studs into axle housing. Refer to page DF02-58. Tighten the studs to correct torque value. Refer to page DF02-11.
(5) Apply silicone gasket material to the mounting surface of the housing where the carrier fastens. Refer to DF02-59.

**⚠ CAUTION**

**Do not install the carriers using a hammer or mallet. A hammer or mallet will damage the mounting flange of carrier and cause oil leaks.**

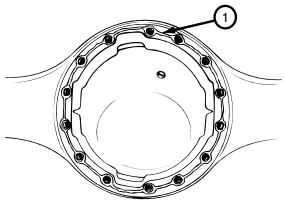


1 0.125" (3 MM) DIA. SILICONE GASKET BEAD

SHTS05Z050200122

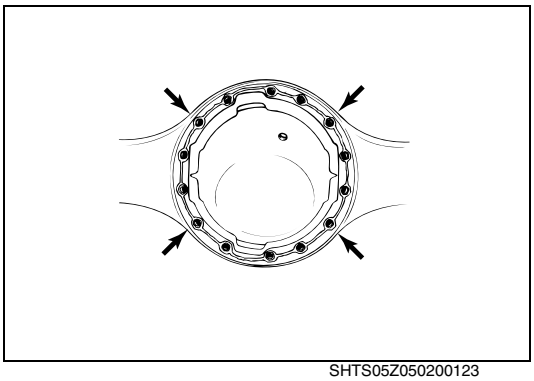

SHTS05Z050200123

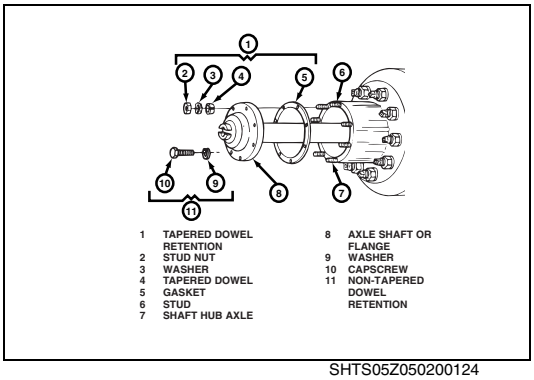


SHTS05Z050200124

(6) Use a hydraulic roller jack or a lifting tool to install the carrier into the axle housing.

(7) Install nuts and washers or capscrews and washers, if equipped, in the four corner locations around the carrier and axle housing. Hand-tighten the fasteners.

(8) Carefully push the carrier into position. Tighten the four fasteners two or three turns each in a pattern opposite each other.

(9) Repeat 23. (8) until the four fasteners are tightened to the correct torque value. Refer to page DF02-11.

(10) Install the other fasteners and washers that hold the carrier in the axle housing. Tighten fasteners to the correct torque value. Refer to page DF02-11.

(11) Connect the driveline universal joint to the pinion input yoke or flange on the carrier.

(12) Install the gaskets and axle shafts into the axle housing and carrier. The gasket and flange of the axle shafts must fit flat against the wheel hub.

**24. INSTALLATION OF STRAIGHT HOLES, NUTS AND HARDENED WASHERS**

(1) Clean the mating surfaces of the axle shaft and the wheel hub.

(2) If silicone gasket material is used, apply a 0.125-inch (3 mm) diameter bead of the gasket material around the mating surface of the hub and around the edge of each fastener hole.

(3) Install the gasket and the axle shaft into the housing. The gasket and the flange of the axle shaft must fit flat against the wheel hub.

(4) Install the Grade 8 nuts and hardened washers on the stud. Lock washers are an acceptable alternative. Tighten the stud nuts to the torque specified.

**Shaft-to-Hub Torque Fastener Chart — Non-Tapered Dowel Applications**

| Fastener | Thread Size | Torque Value — Grade 8 Nuts lb-ft (N·m) | |
|---|---|---|---|
| | | Plain Nut | Lock Nut |
| Stud Nut, Axle Shaft | 0.62-18 | 150-230 (244-312) | 130-190 (203-258) |
| | 0.75-16 | 310-400 (420-542) | 270-350 (366-475) |
| Studs | All | Install the course thread end of stud into hub and tighten to last thread. | |

**25. INSTALLATION OF TAPERED DOWEL, HARDENED WASHER AND HARDENED NUT**

(1) Clean the mating surfaces of the axle shaft and the wheel hub.

(2) If silicone gasket material is used, apply a 0.125-inch (3 mm) diameter bead of the gasket material around the mating surface of the hub and around the edge of each fastener hole.

(3) Install the gasket and the axle shaft into the housing. The gasket and the flange of the axle shaft must fit flat against the wheel hub.

(4) Install solid tapered dowels over each stud and into the flange of the axle shaft. Use a punch or a drift and hammer, if necessary.
(5) Install the Grade 8 nuts and hardened washers on the stud. Lock washers are an acceptable alternative. Tighten the stud nuts to the torque specified.

**Shaft-to-Hub Torque Fastener Chart Tapered Dowel Applications**

| Fastener | Thread Size | Torque Value — Grade 8 Nuts lb-ft (N·m) | |
|---|---|---|---|
| | | Plain Nut | Lock Nut |
| Stud Nut, Axle Shaft | 0.44-20 | 50-70 (81-102) | 40-65 (67-88) |
| | 0.50-20 | 75-115 (115-156) | 65-100 (102-136) |
| | 0.56-18 | 110-165 (176-224) | 100-145 (149-197) |
| | 0.62-18 | 150-230 (244-312) | 130-190 (203-258) |
| Studs | All | Install the course thread end of stud into hub and tighten to last thread. | |

# INSPECTION AND REPAIR

EN05Z0502H300001

## 1. CLEAN AND INSPECT YOKES

**⚠ CAUTION**
**Do not install a press on shaft excluder or POSE™ seal after installation of a unitized pinion seal. The use of a POSE™ seal will prevent correct seating of the unitized pinion seal on the yoke and will result in lubricant leakage at the seal. POSE™ seal installation is recommended only for triple lip and other previous design seals.**

**Do not use thin metal wear sleeves to refresh the yoke surface. Wear sleeves pressed onto the yoke will prevent correct seating of the pinion seal and damage the pinion seal assembly. Wear sleeve usage will cause the seal to leak.**

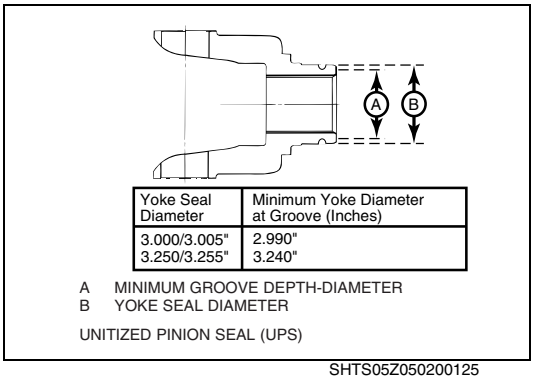


| Yoke Seal Diameter | Minimum Yoke Diameter at Groove (Inches) |
|---|---|
| 3.000/3.005" | 2.990" |
| 3.250/3.255" | 3.240" |

A MINIMUM GROOVE DEPTH-DIAMETER
B YOKE SEAL DIAMETER

UNITIZED PINION SEAL (UPS)

SHTS05Z050200125

(1) Clean the ground and polished surface of the yoke journal using a clean shop towel and a safe cleaning solvent. Do not use abrasive cleaners, towels, or scrubbers to clean yoke or flange surface. Do not use gasoline.

(2) Inspect the yoke seal surface for any grooves.

a. If grooves are present on yoke hubs used with single or triple lip seals, the yokes must be replaced.

b. If grooves are present, use calipers to measure the groove diameters. If any of the yoke grooves measure less than the dimensions in, replace the yoke.

## 2. CLEAN GROUND AND POLISHED PARTS

(1) Use a cleaning solvent to clean ground or polished parts or surfaces. Kerosene or diesel fuel oil can be used for this purpose. Do not use gasoline.

(2) Use a tool with a flat blade if required, to remove sealant material from parts. Be careful not to damage the polished or smooth surfaces.

**⚠ CAUTION**
**Do not use hot solution tanks or water and alkaline solutions to clean ground or polished parts. Damage to parts can result.**

(3) Do not clean ground or polished parts with water or steam. Do not immerse ground or polished parts in a hot solution tank or use strong alkaline solutions for cleaning, or the smooth sealing surface may be damaged.

## 3. CLEAN ROUGH PARTS

(1) Clean rough parts with the same method as cleaning ground and polished parts.

(2) Rough parts can be cleaned in hot solution tanks with a weak or diluted alkaline solution.

(3) Parts must remain in hot solution tanks until heated and completely cleaned.

(4) Parts must be washed with water until all traces of the alkaline solution are removed.

## 4. CLEAN AXLE ASSEMBLIES

(1) A complete axle assembly can be steam cleaned on the outside to remove dirt.

(2) Before the axle is steam cleaned, close or place a cover over all openings in the axle assembly. Examples of openings are breathers or vents in air chambers.

**5. DRY PARTS AFTER CLEANING**

(1) Parts must be dried immediately after cleaning and washing.

(2) Dry the parts using soft, clean paper or cloth rags.

**⚠ CAUTION**

**Damage to bearings can result when they are rotated and dried with compressed air.**

(3) Except for bearings, parts can be dried with compressed air.

**6. PREVENT CORROSION ON CLEANED PARTS**

(1) Apply axle lubricant to cleaned and dried parts that are not damaged and are to be assembled.

(2) To store parts, apply a special material that prevents corrosion to all surfaces. Wrap cleaned parts in a special paper that will protect the parts from moisture and prevent corrosion.

**7. INSPECT PARTS**

It is very important to inspect all parts carefully and completely before the axle or carrier is assembled. Check all parts for wear and replace damaged parts.

(1) Inspect the cup, cone, rollers and cage of all tapered roller bearings in the assembly. If any of the following conditions exist, replace the bearing.

- The center of the large-diameter end of the rollers is worn level with or below the outer surface.
- The radius at the large-diameter end of the rollers is worn to a sharp edge.

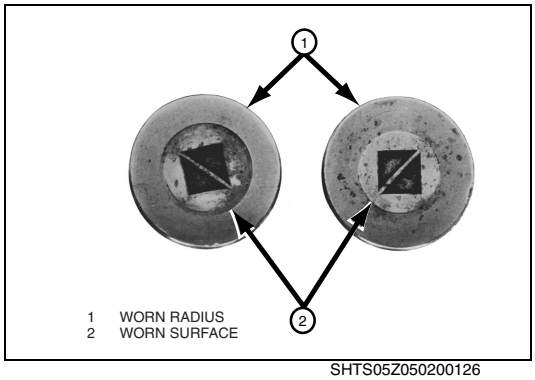


1 WORN RADIUS
2 WORN SURFACE

SHTS05Z050200126

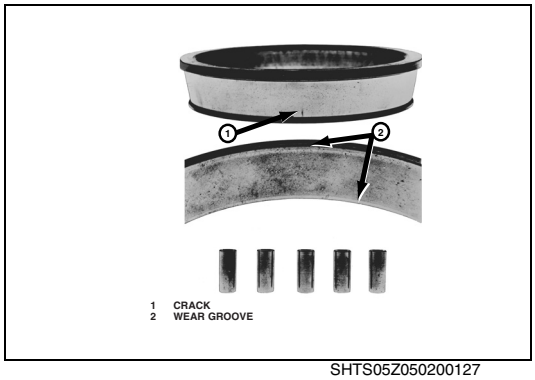


1 CRACK
2 WEAR GROOVE

SHTS05Z050200127

- There is a visible roller groove in the cup or cone inner race surfaces. The groove can be seen at the small- or large-diameter end of both parts.
- There are deep cracks or breaks in the cup, cone inner race or roller surfaces.




SHTS05Z050200128

- There are bright wear marks on the outer surface of the roller cage.

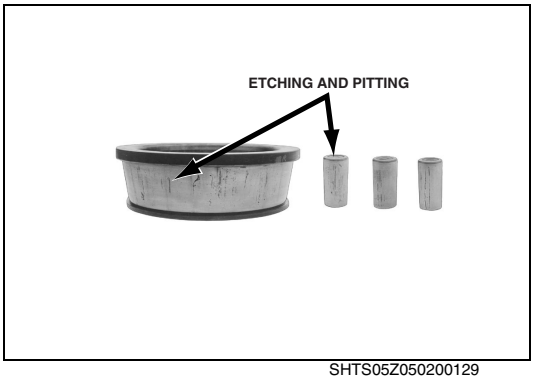


SHTS05Z050200129

- There is damage on the rollers and on the surfaces of the cup and cone inner race that touch the rollers.

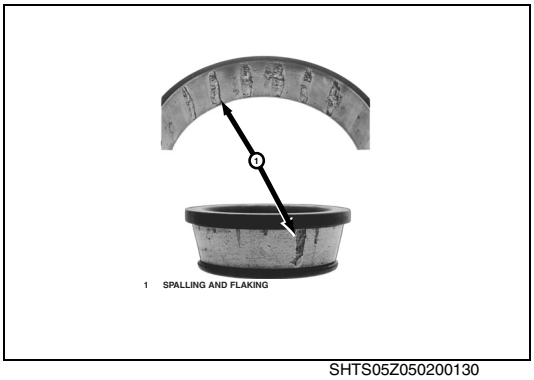


SHTS05Z050200130

- There is damage on the cup and cone inner race surfaces that touch the rollers.

**⚠ CAUTION**
**A drive pinion and ring gear are machined as a matched set. When you replace either a drive pinion or a ring gear, you must replace both parts as a matched set. Do not mix old and new parts. Damage to components can result.**

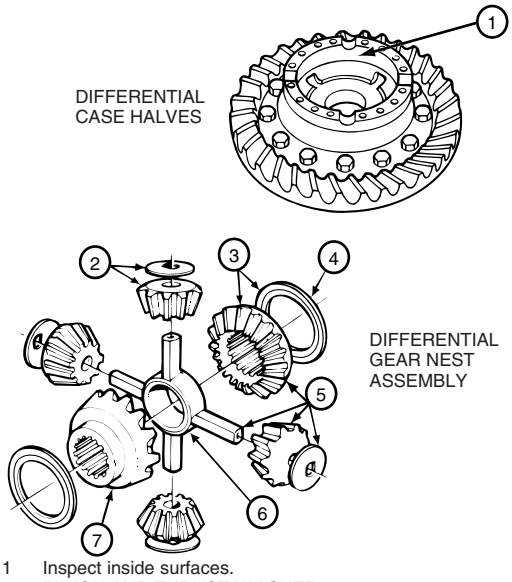


SHTS05Z050200131

(2) Inspect hypoid pinions and gears for wear and damage. Replace gears that are worn or damaged.

**⚠ CAUTION**

**A thrust washer, differential side gear and pinion gear are machined as a matched set. When you replace any of these parts, you must install a new matched set. Do not mix old and new parts. Damage to components can result.**

(3) Inspect the following main differential assembly parts for wear or stress. Replace parts that are damaged.

- Inside surfaces of both case halves
- Both surfaces of all thrust washers
- The four trunnion ends of the spider or cross
- Teeth and splines of both differential side gears
- Teeth and bore of all differential pinions

(4) Inspect axle shafts for wear and cracks at the flange, shaft and splines. Replace the axle shafts, if required.

(5) Inspect the breather.

a. Remove the breather from the axle housing.

b. Clean the breather. If the breather remains dirty after cleaning, replace the breather.

c. Apply compressed air to the breather. If compressed air does not pass through the breather, replace the breather.

d. Install the breather in the axle housing.

### 8. REPAIR OR REPLACE PARTS

**NOTICE**

**Threads must be without damage and clean so that accurate adjustments and correct torque values can be applied to fasteners and parts.**

(1) Replace any fastener if corners of the head are worn.
(2) Replace washers if damaged.
(3) Replace gaskets, oil seals or grease seals at the time of axle or carrier repair.
(4) Clean parts and apply new silicone gasket material where required when axle or carrier is assembled.
(5) Remove nicks, mars and burrs from parts with machined or ground surfaces. Use a fine file, India stone, emery cloth or crocus cloth.
(6) Clean and repair threads of fasteners and holes. Use a die or tap of the correct size or a fine file.

## FASTENERS

**1. REMOVING FASTENERS SECURED WITH ADHESIVE**

If it is difficult to remove fasteners secured with Dri-Loc®, Meritor adhesive or Loctite® 277 adhesive, use the following procedure.

When you remove fasteners secured with adhesive, slowly heat the fastener to 350°F (177°C). Do not exceed this temperature, or heat fasteners quickly. Damage to components can result.

(1) Heat the fastener for three to five seconds. Try to loosen the fastener with a wrench. Do not use an impact wrench or hit the fastener with a hammer.
(2) Repeat step (1) until you can remove the fastener.

**2. NEW FASTENERS WITH PRE-APPLIED ADHESIVE**

**NOTICE**
**No drying time is required for fasteners with pre-applied adhesive.**

(1) Use a wire brush to clean the oil and dirt from threaded holes.
(2) Install new fasteners with pre-applied adhesive to assemble parts. Do not apply adhesives or sealants to fasteners with pre-applied adhesive, or to fastener holes.
(3) Tighten the fasteners to the required torque value for that size fastener.

**3. ORIGINAL OR USED FASTENERS**

(1) Use a wire brush to clean the oil, dirt and old adhesive from all threads and threaded holes.

**NOTICE**
**There is no drying time required for Meritor liquid adhesive 2297-C-7049, Loctite® 680 liquid adhesive or equivalent.**

(2) Apply four or five drops of Meritor liquid adhesive, Loctite® 680 liquid adhesive or equivalent inside each threaded hole or bore. Do not apply adhesive directly to the fastener threads.

(3) Tighten the fasteners to the required torque value for that size fastener.

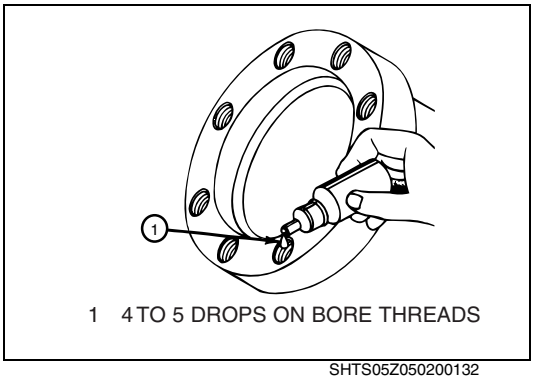


1 4 TO 5 DROPS ON BORE THREADS

SHTS05Z050200132

## APPLYING ADHESIVE AND SILICONE GASKET MATERIAL

### 1. MERITOR SPECIFICATION 2297-T-4180 ADHESIVE IN DIFFERENTIAL BEARING BORES

**NOTICE**
**Use Meritor specification 2297-T-4180 adhesive for all axles.**

(1) Clean the oil and dirt from outer diameters of bearing cups and bearing bores in the carrier and bearing caps. There is no special cleaning required.
(2) Apply axle lubricant to the bearing cones and the inner diameters of the bearing cups of the main differential. Do not get oil on the outer diameter of the bearing cup and do not permit oil to drip onto the bearing bores.

**NOTICE**
**Meritor specification 2297-T-4180 adhesive will dry in approximately two hours. You must complete the procedure within two hours from the time you apply the adhesive. If two hours have passed since application, clean the adhesive from the parts and apply new adhesive.**

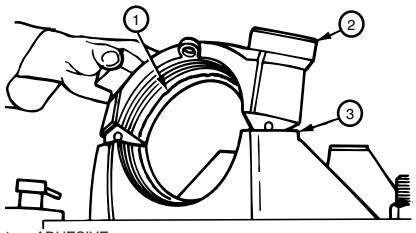


1 ADHESIVE
2 BEARING CAP
3 CARRIER LEG

SHTS05Z050200133

(3) Apply a single continuous bead of the adhesive to the bearing bores in the carrier and bearing caps. Apply the adhesive around the circumference of the smooth, ground surfaces only. Do not place adhesive on threaded areas.
(4) Install the main differential assembly, bearing cups and bearing caps into the carrier. Refer to page DF02-42.
(5) Adjust preload of the differential bearings, backlash and tooth contact patterns of the gear set as required. Refer to page DF02-44, 46.

### 2. THREE BOND 1216, OR EQUIVALENT, SILICONE GASKET MATERIAL

**⚠ WARNING**
**When you apply some silicone gasket materials, a small amount of acid vapor is present. To prevent serious personal injury, ensure that the work area is well-ventilated. Read the manufacturer's instructions before using a silicone gasket material, then carefully follow the instructions. If a silicone gasket material gets into your eyes, follow the manufacturer's emergency procedures. Have your eyes checked by a physician as soon as possible.**

**NOTICE**
**The following silicone gasket products or equivalent can be used for Meritor components:**

- **Three Bond Liquid Gasket TB 1216 (Grey)**
- **Loctite® Ultra Grey Adhesive/sealant #18581**
- **From Meritor: Ten-ounce tubes, part number 2297-F-7052**

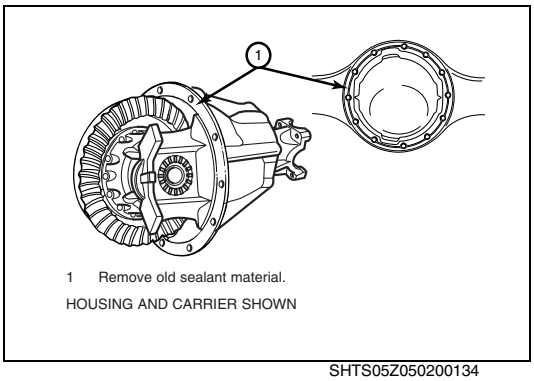


1 Remove old sealant material.
HOUSING AND CARRIER SHOWN

SHTS05Z050200134

(1) Use a tool with a flat blade, if required, to remove all old gasket material from surfaces.

(2) Use a cleaning solvent to clean the surfaces where you will apply silicone gasket material. Remove all oil, grease, dirt and moisture without damaging the mating surfaces.

(3) Dry surfaces.

**⚠ CAUTION**

**Apply silicone gasket material in a continuous 0.125-inch (3 mm) bead. If you use more than this amount, gasket material can break off and plug lubrication passages. Damage to components can result.**

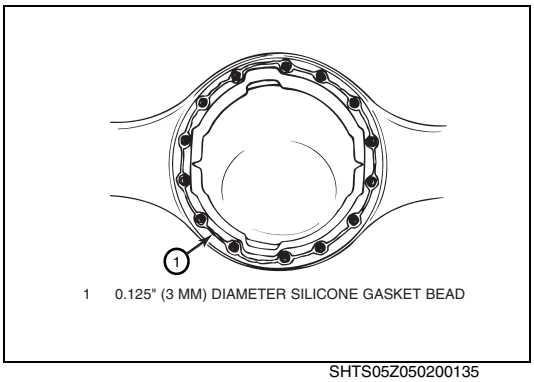


1 0.125" (3 MM) DIAMETER SILICONE GASKET BEAD

SHTS05Z050200135

(4) Apply 0.125-inch (3 mm) diameter continuous bead of the silicone gasket material around one surface. Also apply the gasket material around the edge of all fastener holes on that surface.

(5) Assemble the components immediately to permit the silicone gasket material to compress evenly between the parts. Tighten fasteners to the required torque value for that size fastener. Refer to page DF02-12.

(6) Wait 20 minutes before filling the assembly with lubricant.

## CARRIER-TO-HOUSING JOINT

### 1. REPAIR

(1) Remove the carrier from the housing. Refer to page DF02-15.
(2) Remove all debris from inside the housing.
(3) Use a rotary tool with a ScotchBrite™ pad to clean all silicone residue from the housing and carrier faces. Surfaces must be clean, dry and free of foreign matter. The surfaces must not be oily to the touch.

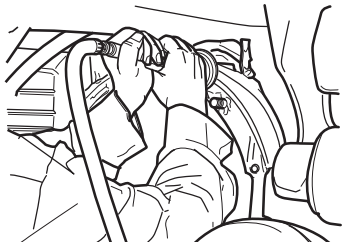

CLEANING HOUSING FACE WITH ROTARY TOOL AND SCOTCHBRITE™ PAD

SHTS05Z050200136

(4) Remove metal filings from the magnets inside the housing.
(5) Use solvent to clean the inside of the housing.
(6) Use Loctite® ODC Free cleaner or brake cleaner to clean the housing and carrier faces.
(7) Dry the housing and carrier faces.
(8) Use a rotary wire brush to remove any nylon patch material and clean the carrier-to-housing capscrew threads. Use a clean cloth to wipe the threads.
(9) Use a tap to clean the internal threads in the housing.

**⚠ WARNING**

**When you apply some silicone gasket materials, a small amount of acid vapor is present. To prevent serious personal injury, ensure that the work area is well-ventilated. Read the manufacturer's instructions before using a silicone gasket material, then carefully follow the instructions. If a silicone gasket material gets into your eyes, follow the manufacturer's emergency procedures. Have your eyes checked by a physician as soon as possible.**

(10) Apply a 0.25-inch (6 mm) bead of Loctite® 5699 silicone gasket material to the housing face. Do not use Three Bond 1216E silicone products.
(11) Install two long studs in the carrier to guide the carrier into the housing.
(12) Immediately install the carrier into the housing to permit the silicone gasket material to compress evenly between the faces.

**⚠ CAUTION**

**Apply silicone gasket material in a continuous 0.125-inch (3 mm) bead. If you use more than this amount, gasket material can break off and plug lubrication passages. Damage to components can result.**

(13) Apply a 0.125-inch (3 mm) bead of Loctite® 242 threadlocker around the capscrew threads approximately 0.25-inch (6 mm) from the end. Apply a 0.125-inch (3 mm) bead of LoctiteR242 threadlocker across the length of the threads.

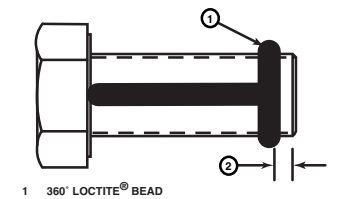


1 360° LOCTITE® BEAD
2 0.25" (6 MM)
LOCTITE® 242 THREADLOCKER APPLICATION

SHTS05Z050200137

(14) Install the capscrews. Use a crossing pattern to tighten the capscrews evenly. The capscrews must be tightened within 10 minutes of initial application of Loctite® 242 threadlocker.

- Tighten 1/2-inch capscrews to 140 lb-ft (190 N·m).
- Tighten 5/8-inch capscrews to 225 lb-ft (306 N·m).

(15) Wait a minimum of 60 minutes before filling the assembly with lubricant.

## INSTALLING TIGHT FIT YOKES AND POSE™ SEAL

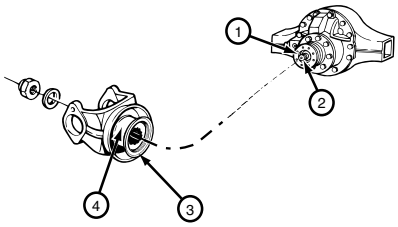


1 Lubricate triple-lip or main seal.
2 INPUT SHAFT OR PINION
3 POSE™ SEAL, 0.25-0.50" (6.4-12.7 MM) ONTO HUB
4 Inspect yoke hub.

SHTS05Z050200138

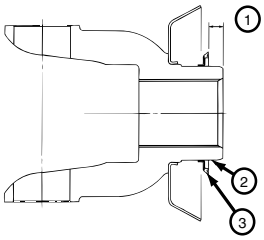


1 0.25-0.50" (6.4-12.7 MM)
2 YOKE HUB
3 FACE SEAL ASSEMBLY, POSE™ SEAL ELEMENT

SHTS05Z050200139

### 1. INSTALLATION

(1) Apply the same lubricant used in the axle housing to the hub of the yoke or flange.

(2) Inspect and verify that the lips of the POSE™ seal and the outer retainer of the triple-lip seal or main seal are clean and free from dirt and particles that may cause lubricant leakage between the seals.

(3) Install the POSE™ seal on the hub of the yoke or flange by hand. The lips of the seal must face toward the end of the hub or the opposite shoulder. Slide the POSE™ seal on the hub until the lips are from 0.25-0.50-inch (6.4-12.7 mm) from the end of the hub. Do not install the POSE™ seal against the shoulder.

**NOTICE**
**The POSE™ seal will position itself correctly as the yoke or flange is pressed on the shaft.**

(4) Before you install the yoke or flange on the shaft, apply the same lubricant used in the axle housing to the hub.

(5) Install the yoke or flange using the correct procedure. The yoke must be completely seated before tightening the pinion nut to the input shaft.

# DRIVER-CONTROLLED MAIN DIFFERENTIAL LOCK

## OVERHAUL

EN05Z0502H200002

### IMPORTANT POINTS - DISMOUNTING

**⚠ WARNING**
**To prevent serious eye injury, always wear safe eye protection when you perform vehicle maintenance or service.**

**Park the vehicle on a level surface. Block the wheels to prevent the vehicle from moving. Support the vehicle with safety stands. Do not work under a vehicle supported only by jacks. Jacks can slip and fall over. Serious personal injury can result.**

**Use a brass or leather mallet for assembly and disassembly procedures. Do not hit steel parts with a steel hammer. Pieces of a part can break off and cause serious personal injury.**

**1. REMOVAL OF DIFFERENTIAL CARRIER FROM THE AXLE HOUSING**

(1) Park the vehicle on a level surface. Block the wheels to prevent the vehicle from moving.

(2) Use a jack or other lifting tool to raise the vehicle so that the wheels to be serviced are off the ground. Support the vehicle with safety stands.

(3) Place a drain pan under the rear axle.

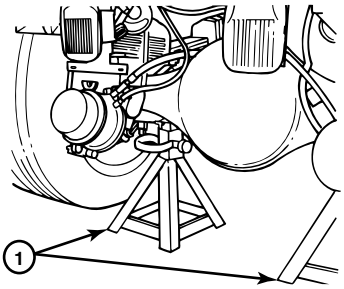


1 SAFETY STANDS

SHTS05Z050200012

(4) Remove the plug from bottom of axle housing. Drain lubricant from the assembly.

(5) Disconnect the driveline universal joint from the pinion input yoke or flange on the carrier.

(6) Remove the capscrews and washers or stud nuts and washers, if equipped, from the flanges of both axle shafts.

(7) Loosen the tapered dowels, if equipped, in the axle flanges of both axle shafts using one of the following methods.

(8) Brass Drift Method. (Refer to DF02-16)

(9) Disconnect the vehicle air line from the differential lock actuator assembly.

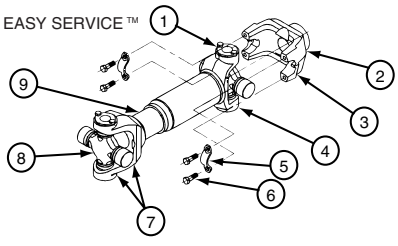


1 FULL ROUND BEARING CUPS
2 END YOKE
3 YOKE SADDLE
4 WELD YOKE
5 BEARING STRAP
6 CAPSCREWS
7 EASY-SERVICE BEARING CUPS
8 U-JOINT CROSS
9 SLIP YOKE

For details, Refer to the Propeller shaft chapter.

SHTS05Z050200013

## IMPORTANT POINTS-DISASSEMBLY

**1. SCREW-IN STYLE DIFFERENTIAL LOCK CYLINDER**

Use the following manual engaging method to lockout the screw-in DCDL assembly.

(1) Follow Steps 1-5 of Axle Setup for DCDL Disassembly in this section.

(2) Remove the manual engaging capscrew from the storage hole in the carrier casting, next to the cylinder.

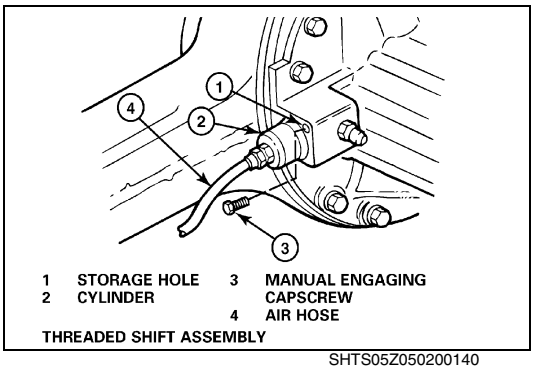

SHTS05Z050200140

(3) Remove air line and fitting. Install the manual engaging capscrew into the threaded hole in the center of the cylinder cover.

(4) Turn the manual adjusting capscrew to the right until the head is approximately 0.25-inch (6 mm) from the cylinder cover. Do not turn the capscrew beyond its normal stop. The capscrew is now in the service position and the main differential lock is completely engaged.

(5) Remove the carrier from the axle housing as described in steps 1-7 of page DF02-17.

**2. REMOVAL OF THE DIFFERENTIAL LOCK SLIDING COLLAR**

(1) Carriers with roll pins, tap out the two retainer roll pins, if equipped, until they are level with the inner face of the shift fork. Release the differential lock if it is manually engaged.

(2) For carriers without roll pins, snap out collar from fork.

(3) If required, remove the DCDL assembly at this time.

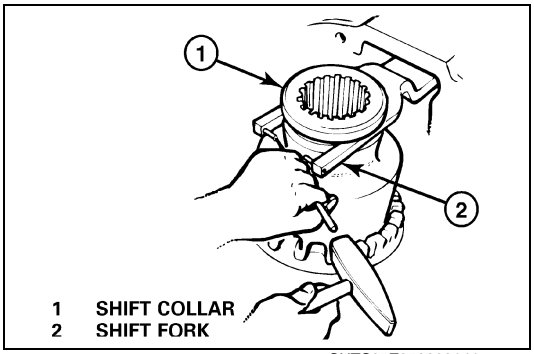

SHTS05Z050200141

**3. REMOVAL OF THE DIFFERENTIAL LOCK ASSEMBLY**

(1) Removal of the lock cylinder
   a. Remove the sensor switch.
   b. Remove the cylinder by turning hex nut at the top of the cylinder with a wrench. The cylinder may be secured to the carrier casting with Loctite® adhesive or equivalent pre-applied liquid adhesive. To brake down these secured fasteners follow the heating procedure. Refer to page DF02-58.
   c. Remove the shift shaft, spring and shift fork.

(2) Remove the cotter keys, pins or lock plates that hold the two bearing adjusting rings in position. Use a small drift and hammer to remove pins. Each lock plate is held in position by two capscrews.

(3) Mark one bearing cap and one carrier leg so that these parts will be assembled in the correct positions. Remove the bearing cap capscrews and washers, the bearing caps and the adjusting rings.

(4) Lift the differential and gear assembly from the carrier. Tilt the assembly as required to permit the ring gear to clear the support for the pinion spigot bearing.

***Further disassembly of these carries is the same as axles without the driver-controlled main differential lock. To continue disassembly, follow the procedures starting with "remove the differential and ring gear from the carrier." (Refer to page DF02-18)***

***Prepare parts for assembly, adjustments, and carrier assembly (up to the point if "install differential carrier into axle housing (Refer to page DF02-51)") are also the same for both axles.***

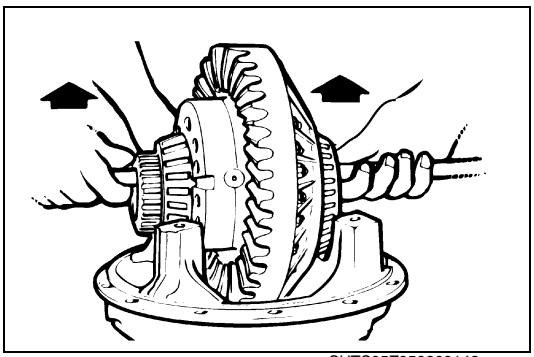
SHTS05Z050200142

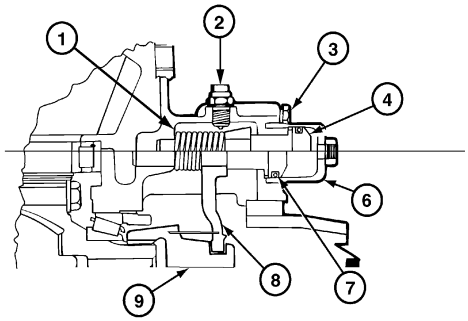


1 SHIFT SHAFT AND SPRING
2 ELECTRIC CONNECTION FOR SENSOR
3 PISTON
4 DISENGAGED
6 CYLINDER
7 O-RING
8 SHIFT FORK
9 COLLAR

SCREW-IN STYLE

SHTS05Z050200143

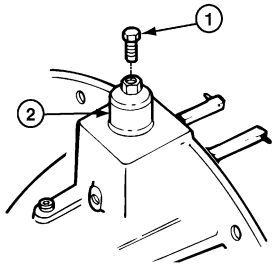


1 MANUAL ACTUATION CAPSCREW
2 SCREW-IN CYLINDER 80-100 LB-FT (109-136 N•m)

SCREW-IN STYLE

SHTS05Z050200144

## IMPORTANT POINTS-ASSEMBLY

### 1. SCREW-IN STYLE DIFFERENTIAL LOCK ASSEMBLY INTO CARRIER

Install the differential shift assembly after the differential carrier is assembled and the gear and bearing adjustments are completed.

(1) Install the shift spring and fork into the correct position in the carrier case. Compress the spring slightly while installing the fork.

(2) Install the shift shaft into the shaft bore of the carrier. Slide the shaft through the shift fork bore and shift spring inside diameter.

(3) Inspect the piston O-ring. Replace the O-ring if there is any evidence of cuts, cracks, abrasion or wear.

(4) Lightly lubricate the O-ring and DCDL cylinder bore with the same lubricant used in the axle housing.

(5) Install the piston and O-ring assembly into the DCDL cylinder. Slide the piston to the port end of the cylinder.

(6) Coat the DCDL cylinder threads with Loctite®518 Gasket Eliminator.

(7) Screw the DCDL cylinder in place. Tighten the cylinder to 80-100 lb-ft (109-136 N·m) torque.

(8) Snap the shift collar into the fork. Engage the shift collar splines with the splines of the differential case. Use the manual actuation capscrew to move the shift collar splines into the differential case splines.

(9) Install the sensor switch into its hole. Tighten the switch to 25-35 lb-ft (35-45 N·m).

(10) Connect a battery or bulb tester to the sensor switch. With the DCDL engaged, the tester light should go on.

- If the light does not go on, perform the following steps:

a. Verify fork position - Is it aligned with the sensor switch when in engaged position?

b. Loose connection - Is the electrical wiring connector tightly seated?

c. Sensor switch position - Is it fully seated against spot face of carrier?

- If light fails to go on after these checks, the sensor switch should be replaced.

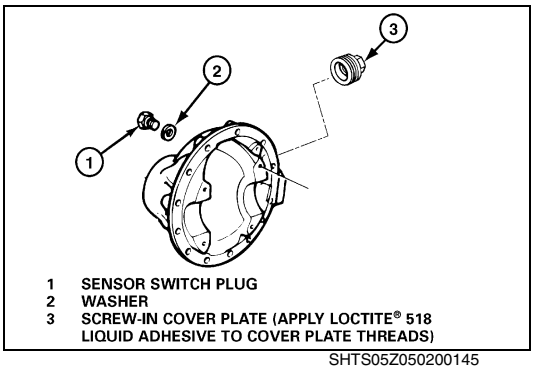


1 SENSOR SWITCH PLUG
2 WASHER
3 SCREW-IN COVER PLATE (APPLY LOCTITE® 518 LIQUID ADHESIVE TO COVER PLATE THREADS)

SHTS05Z050200145

**2. Differential Lock Assembly Cover Plates**

**NOTICE**

**For carriers without the differential lock or air shift, assemble the sensor switch plug and cover plate as follows.**

(1) Apply Loctite®518 liquid adhesive to the plate threads.

**NOTICE**

- **When the carrier is to be installed into the axle housing, the shift collar must be held in the engaged position. This can be done using the manual engaging bolt. Failure to keep the differential in the locked (engaged) position will make it impossible to install the carrier assembly into the axle housing.**
- **After the carrier is installed into the axle housing, shift the differential into the unlocked (disengaged) position to permit the installation of the right-hand axle shaft.**

# INSPECTION AND REPAIR

EN05Z0502H300002

**1. Check the Differential Lock**

(1) Shift the vehicle transmission to neutral. Start the engine to get the system air pressure to the normal level.

**⚠ WARNING**

**During DCDL disassembly, when the DCDL is in the locked or engaged position and one of the vehicle's wheels is raised from the floor, do not start the engine and engage the transmission. The vehicle can move and cause serious personal injury.**

(2) Place the differential lock switch, in the cab of the vehicle, in the unlocked or disengaged position.

(3) Drive the vehicle at 5-10 mph (8-16 km/h) and check the differential lock indicator light. The light must be off when the switch is in the unlocked or disengaged position.

(4) Continue to drive the vehicle and place the differential lock switch in the locked or engaged position. Let up on the accelerator to remove the driveline torque and permit the shift. The light must be on when the switch is in the locked position.

- If the indicator light remains ON with the switch in the unlocked position: The differential is still in the locked position. Verify that the manual engaging capscrew was removed from the cylinder cover of the actuator assembly.

# BRAKE EQUIPMENT (MODELS WITH HYDRAULIC BRAKE)

BR01-001

**SERVICE BRAKE ASSEMBLY.....BR01-2**
DESCRIPTION ..... BR01-2
DIAGRAM ..... BR01-3
TROUBLESHOOTING..... BR01-5
BRAKE SYSTEM AIR BLEEDING..... BR01-10
POWER STEERING
SYSTEM AIR BLEEDING..... BR01-12
BRAKE TEST ..... BR01-13

# SERVICE BRAKE ASSEMBLY

## DESCRIPTION

EN06Z0801C100001

| | |
|---|---|
| Type of service brake | Hydraulic disc type wheel brake with ABS and hydraulic booster (HYDRO-MAX) |
| HYDRO-MAX | The Hydro-Max is a hydraulically powered brake booster which provides power assist for applying hydraulic brakes. The booster reduces the pedal effort required to apply the brakes as compared to a non-power system.<br>The hydraulic booster is comprised of an open center valve and reaction feed back mechanism, a power piston, a 12 volt backup pump and an integral flow switch. It is powered by either the power steering pump or other hydraulic source. The backup pump provides a secondary power source for the hydraulic booster and is controlled by the integral flow switch.<br>The master cylinder is a split system type with separate fluid chambers, pistons and outlet ports for the front and rear brake circuits. A differential pressure switch is equipped.<br>Refer to DIAGRAM on page BR01-3 |
| ABS (Anti-Lock Braking System) | The ABS system comprises of sensor rings mounted on the wheels. The ABS computer receives signals from wheel sensors that monitor the rotational speed of the wheels and sends out signals to maintain the appropriate braking force. The ABS modulator maintains the appropriate braking force based on the control signals. |
| Hydraulic disc brake | Model: HINO 238, 258, 268 (NE8J) and 338 (NF8J)<br>Four-Piston fixed mount Caliper. |

**NOTICE**
**Above components were made by the following manufacturer's;**
**HYDRO-MAX: BOSCH**
**ABS MODULATOR: MERITOR WABCO**
**DISC BRAKE CALIPER: MERITOR**

# DIAGRAM

EN06Z0801J100001

MODEL: HINO238, 258, 268(NE8J) and 338(NF8J) HYDRAULIC BRAKE (E version)

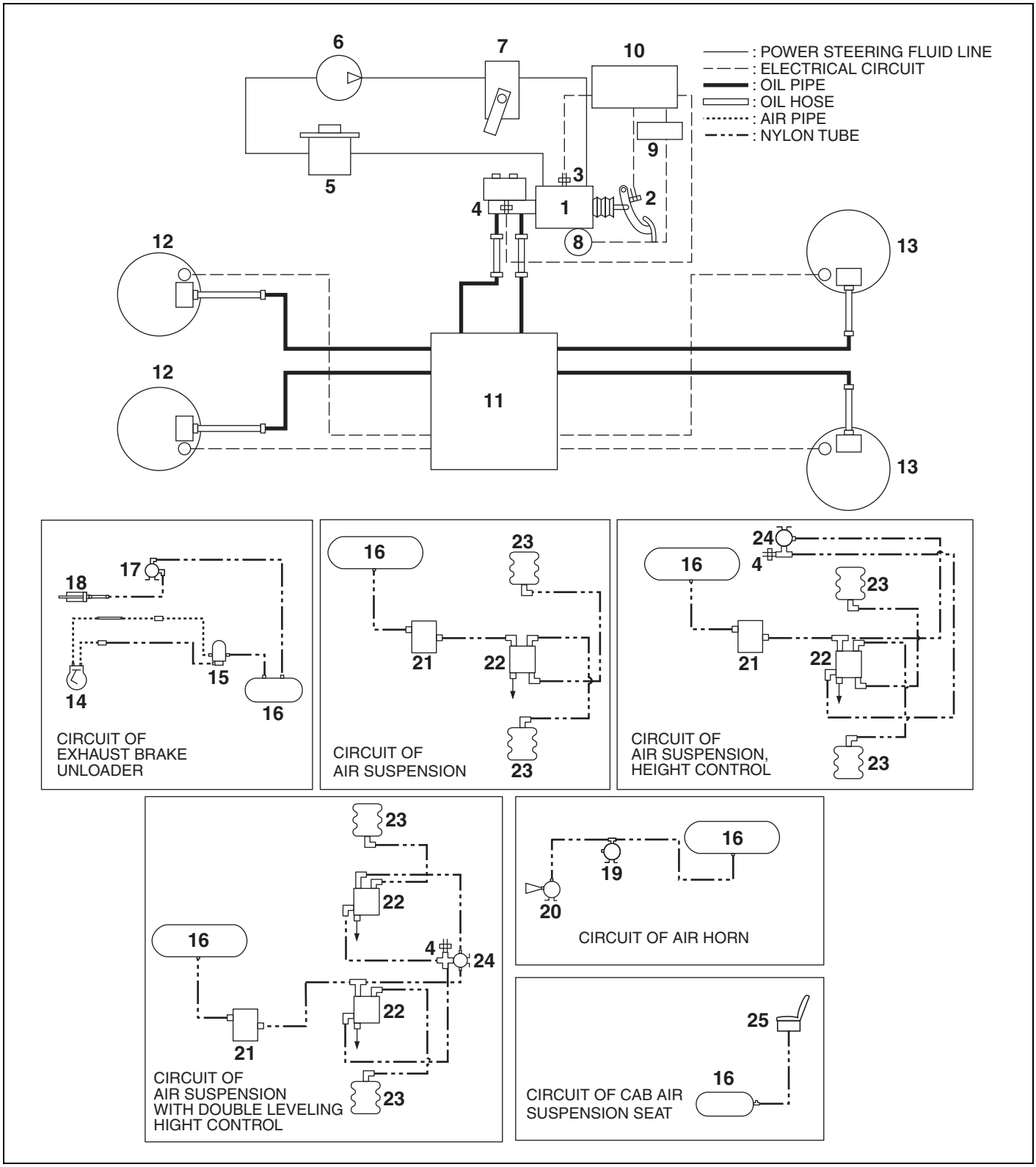


SAPH06Z080100001

| | | | |
|---|---|---|---|
| 1 | Hydro-Max booster and master cylinder | 15 | Air dryer |
| 2 | Stop light switch | 16 | Air tank |
| 3 | Flow switch | 17 | Magnetic valve |
| 4 | Pressure switch | 18 | Exhaust brake |
| 5 | Power steering oil reservoir | 19 | Magnetic valve |
| 6 | Power steering pump | 20 | Air horn (if so equipped) |
| 7 | Power steering gear | 21 | Air suspension protection valve |
| 8 | Backup pump & motor | 22 | Leveling valve |
| 9 | Relay | 23 | Air suspension bellows |
| 10 | Hydro max controller | 24 | Magnetic valve (if so equipped) |
| 11 | ABS modulator and ECU | 25 | Air suspension seat |
| 12 | Speed sensor-front | | |
| 13 | Speed sensor-rear | | |
| 14 | Air compressor | | |

# TROUBLESHOOTING

EN06Z0801F300001

| Symptom | Possible cause | Remedy/Prevention |
|---|---|---|
| **No response upon working the pedal or there is the feeling of stepping on sponge (Air trapped in the brake lines)** | Insufficient seal of master cylinder secondary cup | Replace master cylinder assembly. |
| | Insufficient air bleeding | Bleed air from brake line. |
| **No response upon working the pedal or there is the feeling of stepping on sponge** | Vapor lock in brake system | Bleed air from brake. |
| | Leakage of fluid from brake system | Tighten further or replace gasket, O-ring, cup, etc. |
| | Poor quality brake fluid or improper fluid (low boil point) | Drain the system, flush and refill with the recommended fluid. |
| **Brake fluid decreases** | Leakage of brake fluid from brake system | Tighten further or replace gasket, O-ring, etc. |
| | Leakage of brake fluid from master cylinder | Replace master cylinder assembly. |
| | Worn pad | Replace pad if it is worn to limit. Refill brake fluid. |
| **Excessive pedal travel (though there is response upon working the pedal)** | Insufficient brake fluid in the master cylinder | Search the cause of insufficient fluid, repair or replace it. Then refill fluid and bleed air. |
| | Air trapped in the brake lines | Bleed air from brake lines. |
| | Leakage of fluid from brake system | Check the leak point, repair or replace. |
| | Poor quality brake fluid or improper fluid | Drain the system, flush and refill with the recommended fluid. |
| | Contamination of the brake fluid | Replace the brake system and refill with the recommended fluid. |
| | Insufficient seal of the master cylinder cup | Replace master cylinder assembly. |
| **Unequal or unstable braking** | Pad is wet with grease or fluid | Replace the pad. |
| | Defective pad material (improper combination) | Replace the pad. |
| | Non-uniform pad contact | Correct. |
| | Excessive abrasion loss of rotors | Correct or replace. |
| | Distorted rotors | Correct or replace. |
| | Loose hub bearing | Adjust or replace the bearing. |
| | Improper or unequal pneumatic pressure of tire | Adjust to proper pneumatic pressure. |
| | Clogging of brake system | Replace, the pipe, hose, etc. |
| | Abnormal piston operation of the disc brake | Check the piston seal. |

| Symptom | Possible cause | Remedy/Prevention |
|---|---|---|
| **Brake drags or does not release** | Improper return of master cylinder piston | Replace master cylinder assembly. |
| | Clogging of brake system | Replace the pipe, hose, etc. |
| | Constricted master cylinder reservoir vent | Clean vent passage in reservoir cap. |
| | Self applied booster (fluid flow too high) | Repair or replace power steering pump. |
| | Soft or swollen master cylinder seals due to brake fluid contamination | Flush out old brake fluid then replace master cylinder and add new brake fluid. |
| | Clogging compensating valve of master cylinder | Replace master cylinder assembly. |
| | Improper return of brake pedal | Repair or replace. |
| | Improper return of brake booster piston | Replace booster assembly. |
| | Improper installation pad | Check the installed condition of the pad. Repair. |
| | Improper return of caliper piston | Repair or replace. |
| **Not enough braking, or too much pedal resistance (Wheel brake and rotor)** | Pad is wet with grease or fluid | Replace the pad. |
| | Improper contact of rotor and pad | Correct. |
| | Improper pad material or glazed pad | Correct. |
| | Deformation or hardening of rotor | Correct or replace. |
| | Excessively worn pad | Replace. |
| | Glazed rotor | Correct. |
| **Not enough braking, or too much pedal resistance (Control system pipings)** | Leakage of brake fluid from brake system | Tighten further or replace gasket. |
| **Not enough braking, or too much pedal resistance (Lack of power steering pump pressure)** | Improper operation of power steering pump | Repair or replace. |
| | Clogging of brake system | Replace pipe, hose, etc. |
| **Not enough braking, or too much pedal resistance (Not enough power steering pump pressure or rise of power steering pump pressure)** | Check the pipe joints for tightness | Repair. |
| | There is a rupture or twist in the pipe leading to the power steering pump | Replace. |
| | The hose is ruptured or collapsed | Replace. |
| | Power steering pump relief valve setting too low | Replace power steering pump. |
| | Fluid contamination | Drain, flush and refill system, replace booster or master cylinder as appropriate and power steering reservoir filter as necessary. |
| **Not enough braking, or too much pedal resistance** | Lack of brake fluid | Supply brake fluid periodically. |
| | Improper power steering pump | Replace. |
| | Stuck piston in the master cylinder | Replace master cylinder assembly. |
| | Insufficient power steering fluid | Refill to proper level. |
| | Air trapped in the power steering fluid or brake fluid | Search the cause, refill the fluid and bleed air. |
| | Binding brake pedal linkage | Overhaul and lubricate. |
| | Worn or damaged brake booster | Replace booster assembly. |
| | Leakage around the check ball in the backup pump | Replace the backup pump. |

| Symptom | Possible cause | Remedy/Prevention |
|---|---|---|
| **Brake squeal** | Improper pad material or glazed pad | Replace pad. |
| | Pad back-plate contact with rotor | Replace pad. |
| | Deformation or wear of rotor | Repair or replace. |
| | Intrusion of foreign matter between rotor and pad | Clean the surface of pad or replace. |
| | Loose hub bearing | Adjust or replace bearing. |
| | Hardening of pad surface | Replace pad. |
| | Different pad | Replace proper pad. |
| | Rotor is wet with grease, fluid and dust | Check the leakage position and repair. Clear the rotor. |
| **Impossible to bleed air completely** | Piston cup of master cylinder sucks in air | Replace master cylinder assembly. |
| | Improper tightness of joints of brake system | Tighten further or replace gasket. |
| **Pulsating brake pedal** | ABS operation | Feature of ABS operation (No problem). |
| | Wheel bearings loose or worn | Readjust or replace. |
| | Excessive rotor thickness variation | Repair or replace. |
| **Decreasing pedal travel** | Clogging of the compensating valve of master cylinder | Replace master cylinder assembly. |
| | Swollen pressure seals of master cylinder | Replace master cylinder assembly. |
| | Improper return of the master cylinder piston | Replace master cylinder assembly. |
| **Delay pedal return** | Broken return spring | Replace master cylinder assembly. |
| | Restricted fluid return line of the power steering or hydraulic pump | Remove the obstruction and replace the line. |
| | Swollen power piston seal of the booster | Replace booster assembly. |
| **Backup pump operates continuously** | Abnormal brake switch | Replace. |
| | Abnormal monitor module | Replace. |
| | Abnormal relay | Replace. |
| | Abnormal flow switch | Remove switch components, clean and inspect for damage or contamination and replace if necessary. |
| | Binding pedal linkage | Disassemble and lubricate. |
| **Backup pump does not operate** | Abnormal brake switch | Replace. |
| | Abnormal monitor module | Replace. |
| | Abnormal relay | Replace. |
| | Abnormal flow switch | Remove switch components, clean and inspect for damage or contamination and replace if necessary. |
| | Binding pedal linkage | Disassemble and lubricate. |
| | Abnormal backup pump | Replace backup pump. |
| | Abnormal battery | Recharge or replace. |

| Symptom | Possible cause | Remedy/Prevention |
|---|---|---|
| **Power steering pump is noisy** | Insufficient power steering fluid | Refill proper level. |
| | Air trapped in the power steering fluid | Bleed air from power steering system. |
| | Contamination in the power steering fluid | Replace power steering pump and fluid. |
| **Severe reaction to pedal pressure (Grabby brakes)** | Throttle valve cut in spring defective | Replace booster assembly. |
| | Binding brake pedal linkage | Disassemble and lubricate. |
| | Incorrect pads, or pads loose on plate | Replace pads. Be sure pads are tight on caliper. |
| | Grease or brake fluid on pad | Repair grease seal or caliper as required. Replace pads in axle sets. |
| | Loose caliper on caliper mounting bracket | Retighten. |
| **Leakage between booster and master cylinder** | Primary pressure seal or backup ring of the master cylinder is worn or damaged | Replace master cylinder assembly. |
| | Seal or O-ring of the booster end cap assembly is worn or damaged | Replace booster assembly. |

| Symptom | Trouble shooting and repair |
|---|---|
| Leakage from booster or power steering pump | Reference: BRAKE EQUIPMENT (MODELS WITH HYDRAULIC BRAKE), SERVICE BRAKE ASSEMBLY, "OIL LEAKAGE" (Page BR01-9) |

## OIL LEAKAGE

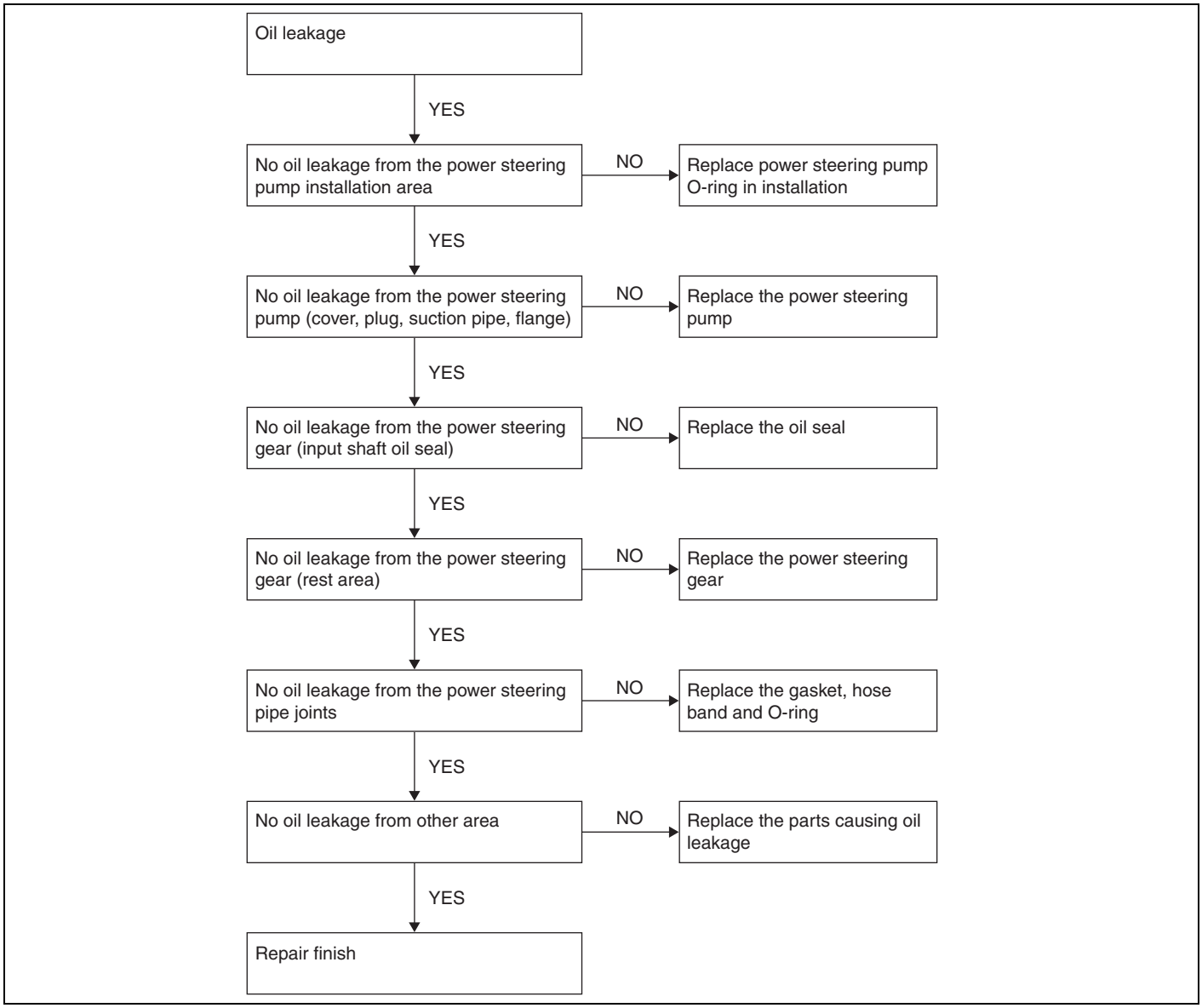


SAPH06Z080100002

# BRAKE SYSTEM AIR BLEEDING

EN06Z0801F300002

**1. PREPARATION**

(1) Apply the parking brake and block the wheels.
Turn the starter switch to "LOCK" position and disconnect the battery terminals.

**NOTICE**

**The starter switch must remain at "LOCK" position for the entire bleeding procedure.**

(2) Fill the reservoir with new DOT 3 or DOT 4 hydraulic brake fluid.

**2. AIR BLEEDING**

(1) Depress the brake pedal five times using the stroke between 1/3 travel and maximum travel in 5 seconds.
(2) Release the pedal for 5 to 10 seconds. Air bubbles will rise the reservoir while depressing and releasing pedal.
(3) Repeat Steps (1) and (2) another three times, or until sufficient pedal resistance is felt.

**⚠ WARNING**

**Do not let the brake master cylinder fluid get below the minimum level during the bleeding operation. Failure to keep the brake reservoir level above minimum could result in more air entering system, making it impossible to effectively bleed the system.**

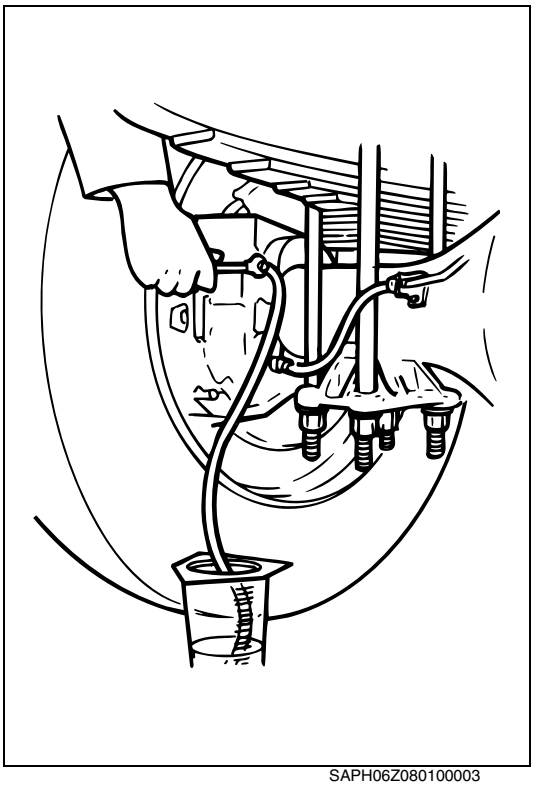

SAPH06Z080100003

(4) Bleed the brake system. Put a wrench on the brake actuator bleeder fitting. Start with the farthest from the modulator, (typically the right rear), then attach a length of clear plastic tubing to the bleeder fitting. Make sure the tube fits snugly.

(5) Submerge the tubing in a container of clean brake fluid.

**NOTICE**

**Both the tubing and container must be able to withstand the effects of brake fluid.**

(6) Depress the brake pedal 10 to 15 times, using the maximum available stroke.
(7) Loosen the bleeder fitting until the fluid begins to flow, (about 3/4 turn), while depressing the brake pedal through its maximum available stroke.
(8) Tighten the fitting firmly prior to releasing the brake pedal.
(9) Repeat Steps (4) through (6) several times until the discharged fluid is free of air bubbles.
(10) Repeat Steps (1) through (7) to bleed the remaining three brake actuators. Bleed in sequence of the longest to the shortest circuit from the modulator.

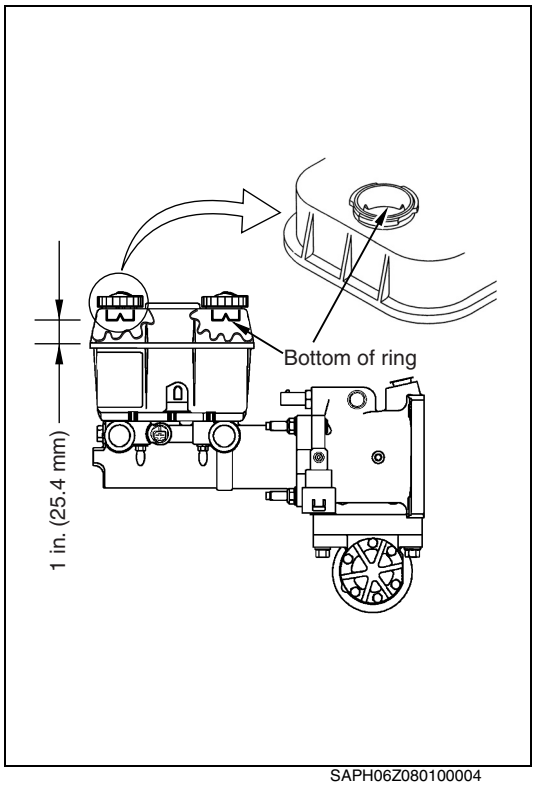


SAPH06Z080100004

(11) Check the travel of the brake pedal. If a firm resistance is felt the manual bleeding procedure is complete.

(12) Check the fluid level in reservoir and fill if required. Replace reservoir cap and dispose of used brake fluid.

**NOTICE**

- **The brake fluid level shall be within the range of 1 in. (25.4 mm) below bottom of ring. Fill to bottom of ring if brake fluid is more than 1 in. (25.4 mm) below bottom of ring.**
- **Remove the excess brake fluid from the reservoir when the worn brake pads are replaced, otherwise there is a possibility the brake fluid will overflow from the master cylinder reservoir.**

# POWER STEERING SYSTEM AIR BLEEDING

EN06Z0801H200001

**1. FILL THE OIL RESERVOIR WITH POWER STEERING FLUID.**

**NOTICE**

- **Use only specified fluid.**
- **Do not overfill the oil reservoir.**
- **Replace old fluid with new fluid after overhauling power steering gear unit or power steering pump.**
- **Specified fluid....Refer to recommended lubricant list.**

**⚠ WARNING**

**Do not use brake fluid. Mixing brake fluid with power steering fluid will damage the seals and O-rings in the Hydro-Max booster, the power steering pump and power steering gear unit, resulting in possible steering loss.**

**2. JACK UP THE FRONT AXLE AND SUPPORT THE FRAME WITH STANDS.**

**NOTICE**

**Block the rear wheels.**

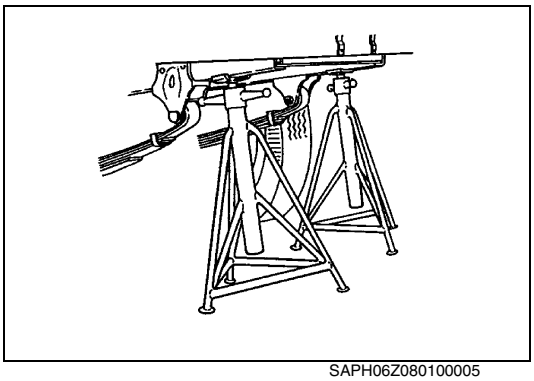

SAPH06Z080100005

**3. TURN THE STEERING WHEEL FULLY IN BOTH DIRECTIONS SEVERAL TIMES.**

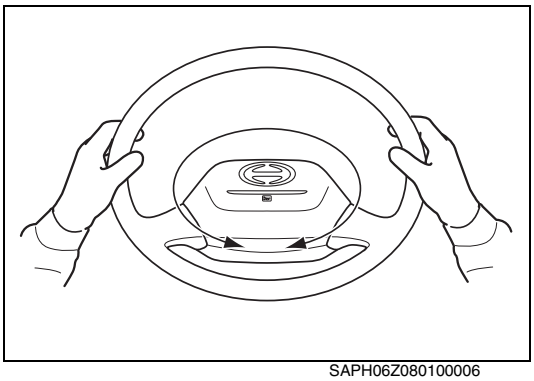

SAPH06Z080100006

**4. CHECK THE FLUID LEVEL IN THE OIL RESERVOIR.**

(1) Add fluid, if necessary.

**⚠ WARNING**

**When checking the fluid level of the power steering reservoir or adding fluid to the reservoir, be careful not to contaminate fluid with dirt in the reservoir. Fluid contaminated with dirt can result in a shorter life of the pump, and can result in personal injury and/or property damage due to improper operation of relief valve, central valve, etc.**

**5. START THE ENGINE AND TURN THE STEERING WHEEL FULLY IN BOTH DIRECTIONS SEVERAL TIMES WITH ENGINE IDLING.**

**NOTICE**

**The fluid in the oil reservoir should be continuously replenished while air bleeding so that the oil reservoir never becomes empty.**

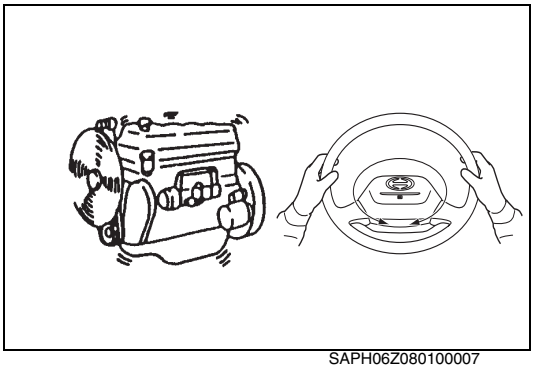

SAPH06Z080100007

**6. RETURN THE STEERING WHEEL TO STRAIGHT AHEAD.**

**7. CHECK THE BRAKE OPERATION.**

(1) Release the parking brake.

(2) Turn the starter switch to "ON" position (engine is not running). The brake pressure warning light and buzzer should come on. Depress the brake pedal, and the backup pump should start.

(3) Start the engine and depress the brake pedal. The brake pressure warning light and buzzer should not come on, and the backup pump should not start. If they come on there is a malfunction. See trouble-shooting to find the problem.

**8. RECHECK THE FLUID LEVEL WHEN THE ENGINE IS STOPPED.**

(1) If necessary, add or decrease the power steering fluid to match between "MAX" and "MIN".

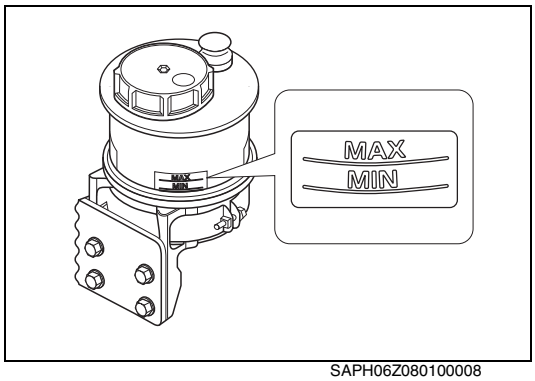

SAPH06Z080100008

**⚠ CAUTION**

**If air bleeding is not done properly, and the engine is stopped, power steering fluid could overflow from the reservoir.**

# BRAKE TEST

EN06Z0801F300003

Measure the braking effect of each wheel on the brake tester. If no brake tester is on hand, perform the brake test from low speed 5—10 km/h (3.1—3.6 miles/h) and check the braking performance. Also check to see that there are no irregularities in general.

# BRAKE EQUIPMENT (MODELS WITH FULL AIR BRAKE)

BR01-002

**SERVICE BRAKE ASSEMBLY.....BR01-2**
DESCRIPTION ..... BR01-2
DATA AND SPECIFICATIONS ..... BR01-3
DIAGRAM ..... BR01-4
TROUBLESHOOTING ..... BR01-5

# SERVICE BRAKE ASSEMBLY

## DESCRIPTION

EN06Z0801C100001

| | |
|---|---|
| Type of service brake | Full air, S-cam brake (Q-plus) with automatic adjuster. |
| Air charging system | Air charging is from piston type air compressor and air flow is directed and controlled by a pressure regulator, the necessary valves, and lines as required.<br>Pressure sensor and air pressure warning switch are used for indicating the pressure level in the system. |
| Service brake control system | Two independent lines for front and rear wheels with air flow controlled by a brake valve, and each line comprises of a group of valves and brake chambers (one/wheel).<br>Two stop light switches (one/line) are used to operate the stop lights. |
| Spring brake control system | Single line for rear spring brake chambers.<br>The line comprises a control valve which controls air flow, the other necessary valve and spring brake chambers.<br>A parking brake switch is used to turn OFF the warning buzzer and to turn ON the parking brake warning light. |
| ABS (Anti-Lock Braking System) | The ABS system comprises sensor rings mounted on the wheels, the ABS ECU which receives signals from wheel sensors that monitor the rotational speed of the wheels and sends out signals to maintain the appropriate braking force, the ABS control valves which increase or decrease the braking force based on the control signals. |

# DATA AND SPECIFICATIONS

EN06Z0801I200001

| Parts name | Maker | Model · specification |
|---|---|---|
| Front axle wheel brake | MERITOR | 15 x 4 Q-Plus Cam Brake with Cast Spider, automatic slack adjuster (Slack length: 5.5, type: handed)<br>Drum: 15 in. Outboard mounted |
| Front Brake chamber | WABCO | T-20 20 x 2.25 in. standard |
| Rear axle wheel brake | MERITOR | 16.5 x 7 or 15 x 8.625 Q-Plus Cam Brake with Cast Spider, automatic slack adjuster (Slack length: 5.5 or 6.0, type: handed)<br>Drum: 16.5 in. Outboard mounted |
| Rear Spring brake chamber | MGM | TR3030 3030 x 2.50 in. standard |
| Brake valve | Bendix | E-8P |
| Check valve | Bendix | SC-3 |
| Spring brake control valve | Bendix | PP-DC |
| Spring brake modulating valve | Bendix | SR-7 |
| Rear relay valve | Bendix | R-14 (No.102860) |
| Air dryer | Bendix | AD-IS |

Brake chamber setting

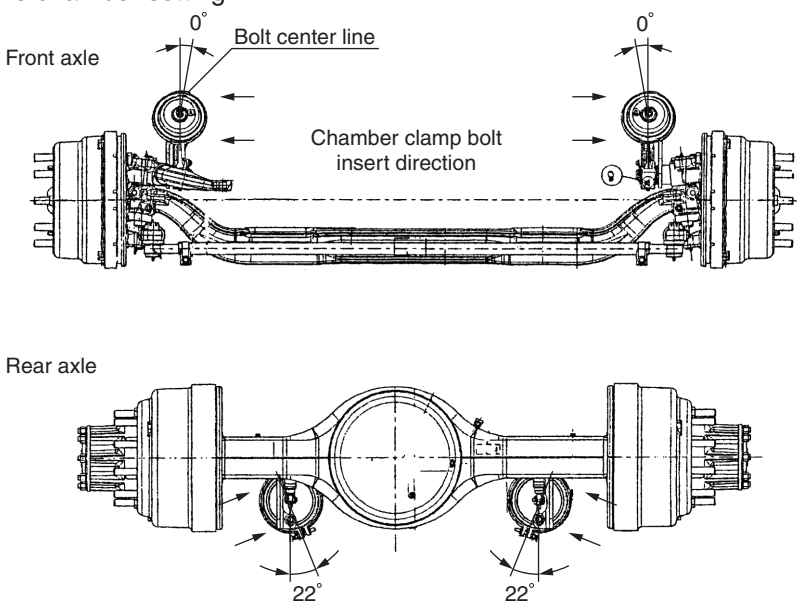


SAPH06Z080100001

# DIAGRAM

EN06Z0801J100001

## MODEL: HINO 258 (NJ8J), 268 (NJ8J, NV8J), 338 (NV8J) and 358 (NH8J) FULL AIR BRAKE

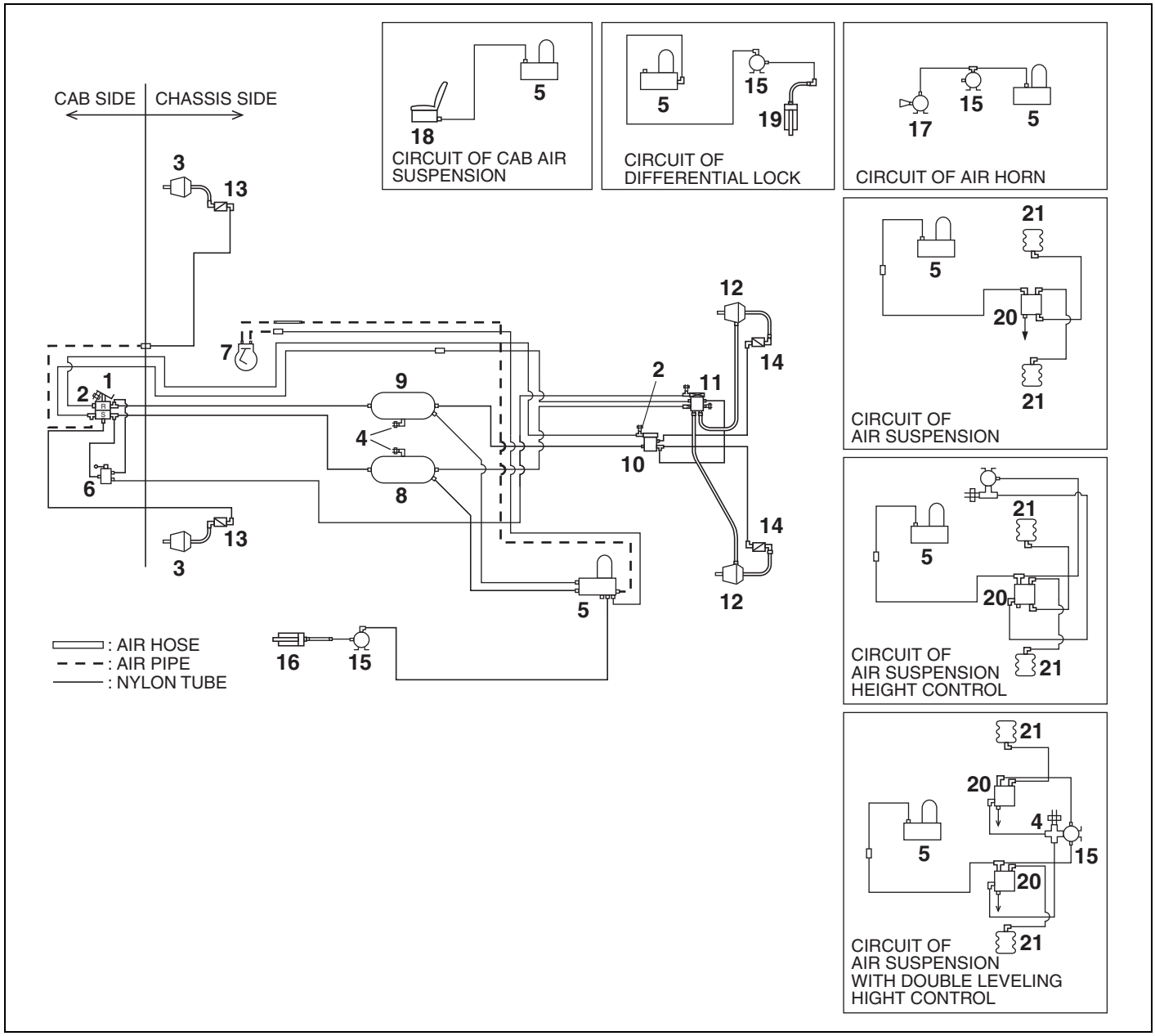


SAPH06Z080100002

| | | | |
|---|---|---|---|
| 1 | Brake valve | 12 | Brake chamber-Rear |
| 2 | Stop light switch | 13 | ABS control valve - Front |
| 3 | Brake chamber - Front | 14 | ABS control valve - Rear |
| 4 | Air pressure sensor | 15 | Magnetic valve |
| 5 | Air dryer | 16 | Exhaust brake |
| 6 | Spring brake control valve | 17 | Air horn (if so equipped) |
| 7 | Air compressor | 18 | Air suspension seat |
| 8 | Air tank - Front | 19 | Differential lock |
| 9 | Air tank - Rear | 20 | Leveling valve |
| 10 | Relay valve (for service brake) | 21 | Air suspension bellows |
| 11 | Spring brake modulating valve | | |

# TROUBLESHOOTING

EN06Z0801F300001

| Symptom | Possible cause | Remedy/Prevention |
|---|---|---|
| **Not enough braking (Wheel brake and drum)** | Lining is wet with grease or oil | Replace lining. |
| | Improper contact of drum and lining | Correct. |
| | Improper lining material or hardening lining | Replace lining. |
| | Deformation or hardening of drum | Correct or replace. |
| | Excessively worn lining | Replace. |
| | Improper adjustment of shoe clearance | Check automatic slack adjuster. |
| **Check automatic slack adjuster. Not enough braking (Control system)** | Leakage of compressed air from brake system | Tighten further or replace gasket. |
| | Lack of compressed air pressure due to excessive use | Use properly. |
| | Improper operation of air compressor | Repair or replace. |
| | Improper operation of brake valve | Repair or replace. |
| | Improper operation of relay valve | Repair or replace. |
| | Improper operation of spring brake control valve | Repair or replace. |
| | Improper operation of spring brake chamber | Repair or replace. |
| | Clogging of brake system | Replace pipe, hose, etc. |
| **Unequal or unstable braking (Wheel brake and drum)** | Lining is wet with grease or oil | Replace lining. |
| | Defective lining material (Improper combination) | Replace lining. |
| | Non-uniform lining contact | Correct. |
| | Non-uniform brake chamber rod stroke | Check automatic slack adjuster. |
| | Distorted drums | Correct or replace. |
| | Excessive abrasion of drums | Correct or replace. |
| **Unequal or unstable braking (Control system)** | Clogging of brake system | Replace pipe, hose, etc. |
| **Unequal or unstable braking (Others)** | Loose hub bearing | Adjust or replace bearing. |
| | Improper or unequal pneumatic pressure of tire | Adjust to proper pneumatic pressure. |
| **Brake drags or does not release (Wheel brake and drum)** | Improper adjustment of shoe clearance | Check automatic slack adjuster. |
| | Defective shoe return spring | Replace. |
| **Brake drags or does not release (Control system)** | Lack of pedal play | Adjust. |
| | Improper return of brake pedal | Repair or replace. |
| | Improper operation of brake valve | Repair or replace. |
| | Improper operation of relay valve | Repair or replace. |
| | Leakage of air pressure from brake system | Tighten connections further or replace gaskets. |
| | Improper operation of spring brake control valve | Repair or replace. |
| | Improper operation of spring brake chamber | Repair or replace. |
| | Improper operation of air compressor | Repair or replace. |
| | Clogging of brake system | Replace pipe, hose, etc. |

| Symptom | Possible cause | Remedy/Prevention |
|---|---|---|
| **Brake squeal (Wheel brake and drum)** | Improper lining material or glazed lining | Replace lining. |
| | Loose lining rivet | Replace or tighten the rivet further. |
| | Lining rivet in contact with drum | Replace lining and rivet. |
| | Deformation or wear of drum | Repair or replace. |
| | Intrusion of foreign matter between drum and lining | Clean the surface of lining or replace. |
| **Brake squeal (Others)** | Loose hub bearing | Adjust or replace bearing. |

# SERVICE BRAKE (HYDRAULIC BRAKE) BR02-001

**AIR DRYER ..... BR02-2**
DATA AND SPECIFICATIONS ..... BR02-2
DESCRIPTION ..... BR02-2
COMPONENT LOCATOR ..... BR02-3
OVERHAUL ..... BR02-4
INSPECTION AND REPAIR ..... BR02-6

**HYDRAULIC BRAKE ..... BR02-7**
INSPECTION AND ADJUSTMENT ..... BR02-7

**HYDRO-MAX HYDRAULIC BRAKE BOOSTER AND MASTER CYLINDER ..... BR02-10**
DATA AND SPECIFICATIONS ..... BR02-10
DESCRIPTION ..... BR02-10
PRINCIPLE OF OPERATION ..... BR02-12
COMPONENT LOCATOR ..... BR02-14

**HYDRO-MAX BOOSTER ..... BR02-15**
OVERHAUL ..... BR02-15

**MASTER CYLINDER ..... BR02-21**
OVERHAUL ..... BR02-21
PRESSURE TESTS ..... BR02-23

**ABS MODULATOR ..... BR02-24**
DATA AND SPECIFICATIONS ..... BR02-24
DESCRIPTION ..... BR02-24

**WHEEL BRAKE (TYPE: 4 PISTON) ..... BR02-25**
DATA AND SPECIFICATIONS ..... BR02-25
DESCRIPTION ..... BR02-26
TROUBLESHOOTING ..... BR02-27

# AIR DRYER

## DATA AND SPECIFICATIONS

EN0680102I200002

| | |
|---|---|
| **Type** | **Purge tank, desiccant, auto-purge valve.** |
| **Air and Water discharging time (Reclamation cycle)** | **Approx. 50 sec.** |

## DESCRIPTION

EN0680102C100002

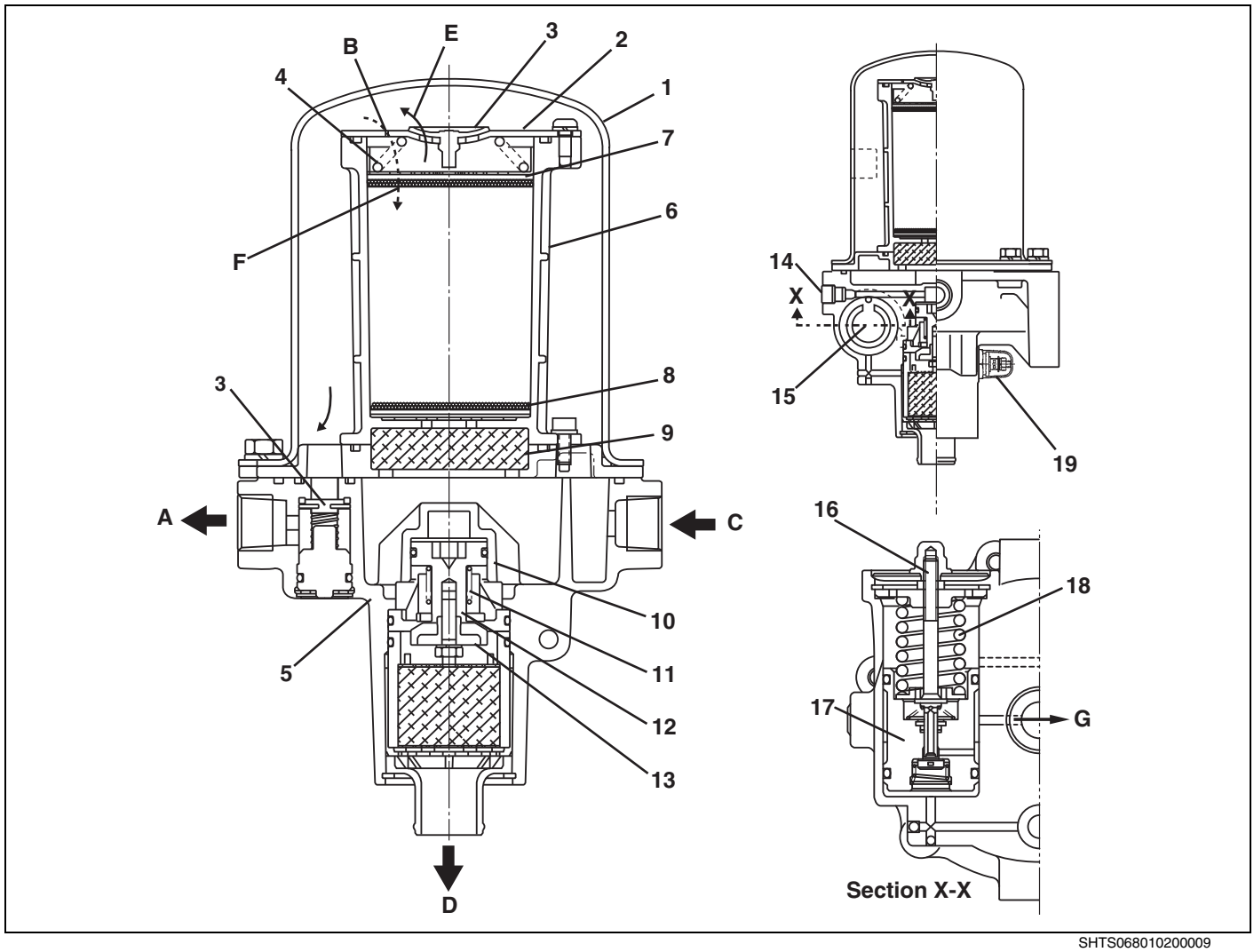


SHTS068010200009

| | | | | | |
|---|---|---|---|---|---|
| **1** | **Chamber (Purge tank)** | **10** | **Valve body** | **19** | **Heater (If so equipped)** |
| **2** | **Case cover** | **11** | **Valve spring** | **A** | **Outlet (Dried air to air tank)** |
| **3** | **Check valve** | **12** | **Piston** | **B** | **Orifice** |
| **4** | **Spring** | **13** | **Purge valve** | **C** | **Inlet (From air compressor)** |
| **5** | **Body** | **14** | **Plug** | **D** | **Purged air** |
| **6** | **Desiccant case** | **15** | **Pressure regulator** | **E** | **Dehumidification** |
| **7** | **Filter** | **16** | **Adjusting screw** | **F** | **Reclamation** |
| **8** | **Desiccant** | **17** | **Piston** | **G** | **To purge valve** |
| **9** | **Oil separator filter (If so equipped)** | **18** | **Piston spring** | | |

# COMPONENT LOCATOR

EN0680102D100002

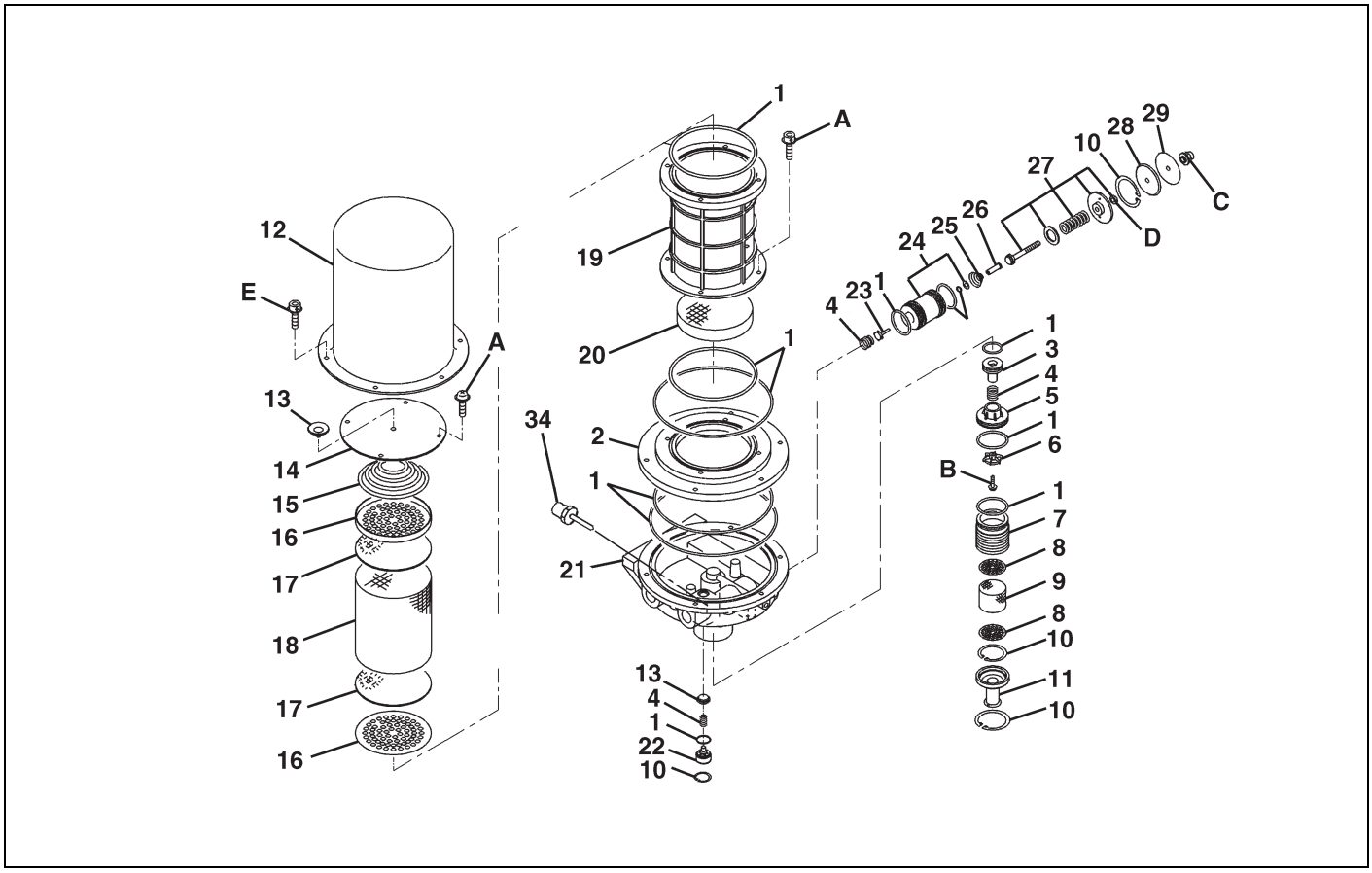


SHTS068010200010

| | | | |
|---|---|---|---|
| 1 | O-ring | 16 | Filter plate |
| 2 | Plate | 17 | Filter |
| 3 | Piston | 18 | Desiccant |
| 4 | Valve spring | 19 | Desiccant case |
| 5 | Valve body | 20 | Oil separator filter (If so equipped) |
| 6 | Purge valve | 21 | Body |
| 7 | Silencer case | 22 | Valve stopper |
| 8 | Silencer plate | 23 | Governor valve |
| 9 | Silencer | 24 | Piston assembly |
| 10 | Retainer ring | 25 | Exhaust stem spring |
| 11 | Exhaust cover | 26 | Exhaust stem |
| 12 | Chamber | 27 | Pressure regulator assembly |
| 13 | Check valve | 28 | Valve seat |
| 14 | Case cover | 29 | Plate |
| 15 | Set spring | | |

**Tightening torque** **Unit: N·m {kgf·cm, lbf·ft}**

| | | | |
|---|---|---|---|
| A | 2.0-3.9 {20-40, 1.5-2.9} | D | 6.9-7.8 {71-79, 5.2-5.7} |
| B | 3.9-6.9 {40-70, 2.9-5.0} | E | 17.7-27.5 {180-280, 13-20} |
| C | 4.9-5.9 {50-60, 3.7-4.3} | | |

# OVERHAUL

EN0680102H200002

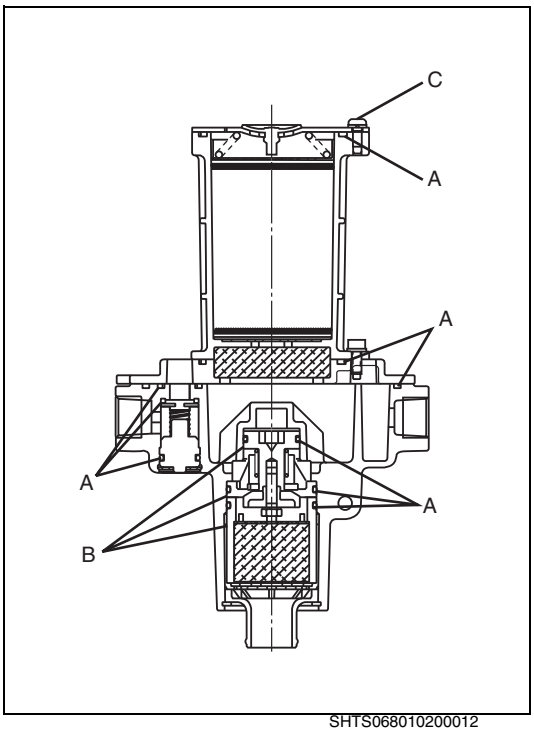


SHTS068010200012

## IMPORTANT POINTS - ASSEMBLY

**1. LUBRICATION**

(1) When assembling the air dryer, use new O-ring, gasket and seal.

(2) Apply grease (lithium base) to each sliding surface of the component parts and O-ring groove.

- **A: O-ring**
- **B: Sliding surface**

**2. BEFORE TIGHTEN THE BOLT WITH SPECIFIED TIGHTENING TORQUE, TAP ALL OVER THE OUTER SURFACE OF THE DESICCANT CASE WITH A PLASTIC HAMMER.**

- **C: Bolt**

## IMPORTANT POINTS - MOUNTING

**1. INSPECTION**

(1) Operate the engine and raise the air pressure until the air discharge from the purge valve, then stop the engine.
(The pressure reaches the valve opening pressure of the air pressure regulator).

a. Check to see that there is no air leakage from the purge valve.

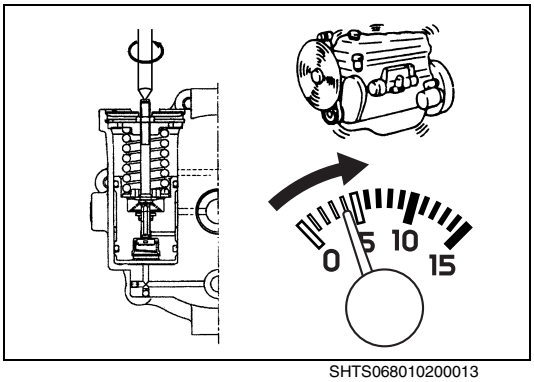


SHTS068010200013

**2. ADJUSTMENT**

(1) Loosen the adjusting screw until the rod spring tension is released, and start and idle the engine to charge the air for the air tank.

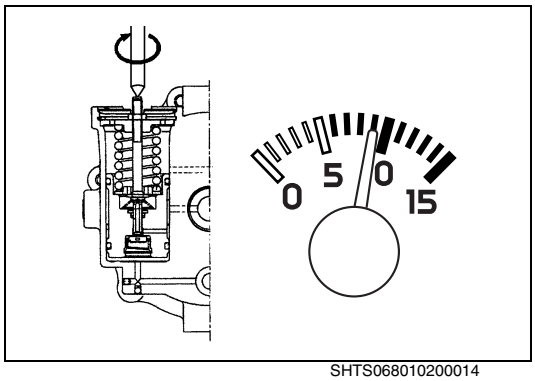


SHTS068010200014

(2) Tighten the adjusting screw gradually till the air pressure gauge indicate valve opening pressure shown below and the air starts to discharge from purge valve.
**Governor valve opening pressure: 880 kPa {9.0 kgf/cm$^2$, 128 lbf/in.$^2$}**

(3) Tighten the adjusting screw lock nut.

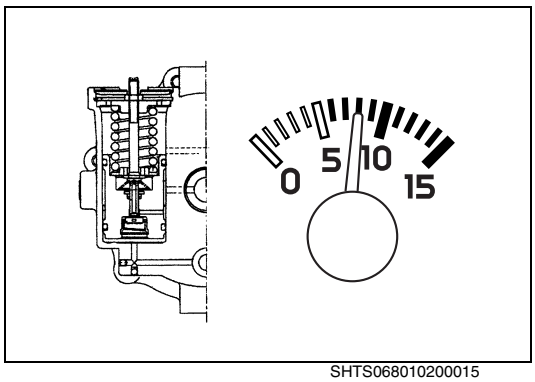


SHTS068010200015

(4) Watch the air pressure gauge needle and see that it stops at the valve closing pressure shown below.
**Governor valve closing pressure: 780 kPa {8.0 kgf/cm$^2$, 114 lbf/in.$^2$}**

# INSPECTION AND REPAIR

EN0680102H300002

**NOTICE**

- **Every 15,000 km {9,000 miles} or 3 months: Check and adjustment if necessary**
- **Every 12 months: Replace or change**
- **When draining air tanks, if moisture is present replace desiccant.**

| Inspection Item | Standard | Limit | Remedy | Inspection Procedure |
|---|---|---|---|---|
| **Check valve and valve seat surface: Wear and damage** | **—** | **—** | **Replace, if necessary.** | **Visual check** 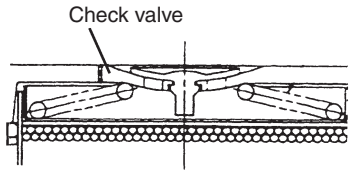  |
| **Valve body sliding surface and purge valve seat surface: Wear and damage** | **—** | **—** | **Replace, if necessary.** | **Visual check** 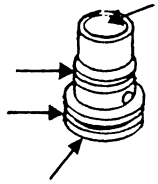 |
| **Piston sliding surface: Wear and damage** | **—** | **—** | **Replace, if necessary.** | **Visual check** 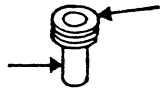 |
| **Purge valve seat surface: Wear and damage** | **—** | **—** | **Replace, if necessary.** | **Visual check**  |
| **Desiccant: Contamination and deterioration** | **—** | **Discolored, more than 1/5 of the quantity.** | **Replace.** | **Visual check** 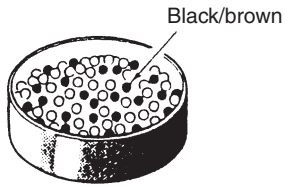  |

# HYDRAULIC BRAKE

## INSPECTION AND ADJUSTMENT

EN16Z0802H600001

**1. REMAINING THICKNESS OF PAD**

**Inspect the pad thickness. If the pad thickness is less than the service limit or if it is foreseen that it may be worn to the service limit before the next inspection, replace it with a new one.**
**Four piston type**
**Assembly Standard: 18.5 mm {0.728 in.}**
**Service Limit: 3.2 mm {0.125 in.}**

**⚠ WARNING**
**If a pad which has become thinner than the limit is left unreplaced, the rotor may be damaged by the pad back-plate and the braking force will be badly degraded. Be sure to check carefully the worn state of the brake pad of all wheels.**

**2. BRAKE FLUID LEAK AND POWER STEERING FLUID LEAK**

(1) Check for fluid leaks.

a. Fluid leaks from lines.
With the brake pedal depressed, visually check for leaks of brake fluid from the brake hydraulic line including the pipes, connection, hoses, etc. If any leak is found, repair or replace with the corresponding parts.

b. When checking for leaks, check also the following items and repair or replace with the corresponding parts as required.
a) Check that the pipes and hoses are not hitting or rubbing other parts. Check that the pipe clips are not loose.
b) Check that the pipes have no cracks and that they have not become rusty.
c) Check that the hoses are not deteriorated, deformed, or swollen.

**NOTICE**
**As a general rule, the brake hoses should be replaced with new ones every 36,000 miles (60,000 km) or 12 months. When any defects as above have been found, replace immediately with new ones.**

c. Fluid leaks from components other than lines.
If the pedal stroke gradually increases as the brake pedal is kept pressed (in the worst case the brake pedal reaches the cab floor), a probable cause is that there is an internal leak in any one of the following components;

- Master cylinder
- Hydraulic booster
- Caliper piston in wheel brake

**3. BRAKE FLUID**

**When the brake fluid is used for a long time, water may get into the brake fluid and its boiling point may become low, thereby causing a possibility of vapor lock which is very dangerous. Replace old brake fluid with fresh brake fluid (Use DOT3 or DOT4 brake fluid) every 36,000 miles (60,000 km) or 12 months.**

(1) Hydraulic brake fluid color check

- Check the color of the brake fluid in the brake fluid reservoir.
- Check that the color is as specified by FMVSS116 (transparent or amber).
- Replace the brake fluid if it has become discolored.
- Probable causes of discoloration are as follows:

a. Thermal load

b. Aging

c. Oxidation

d. Ingression of mineral oil

(2) Brake fluid level check.

Check the fluid level of the brake fluid reservoir which is located under the hood on the driver side of the vehicle. Fluid level should be within 1 inch below bottom of ring. Replenish reservoir with DOT3 or DOT4 brake fluid to bottom of ring if fluid level drops below 1 inch.

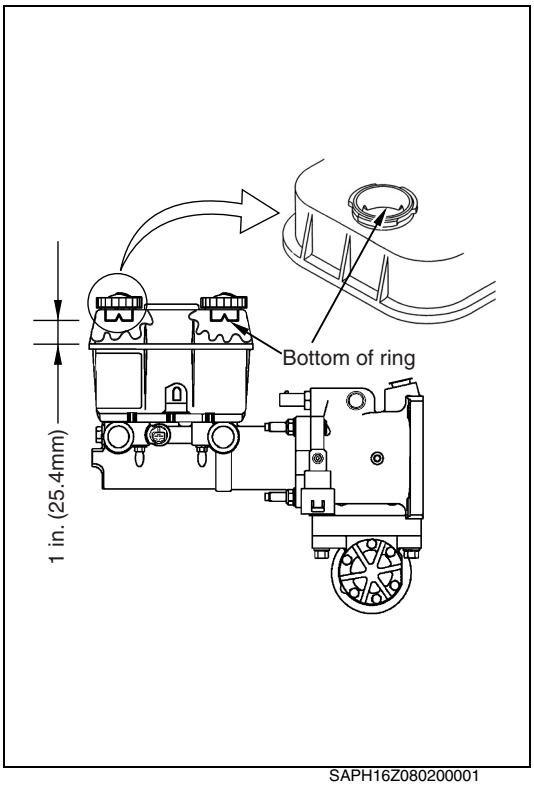


SAPH16Z080200001

**⚠ WARNING**

- **Remove the excess brake fluid from the reservoir when the worn brake pads are replaced, otherwise there is a possibility the brake fluid will overflow from the master cylinder reservoir.**

**NOTICE**

**Be sure to use clean brake fluid. Note that if a foreign substance is mixed with the brake fluid, components of the brake line may be damaged and their functions may be degraded, thereby causing insufficient braking force.**

- **Before removing the brake fluid reservoir cap, clean the vicinity of the cap.**
- **If foreign matter has settled on the bottom of the reservoir, clean the reservoir.**
- **Check that the container and tools used for brake fluid replenishment are clean. If they are dusty or dirty, clean them.**
- **Be sure to clean the strainer of the reservoir when replacing the brake fluid.**
- **Brake fluid is highly hygroscopic, and absorbs moisture. Be sure to securely tighten the caps of the containers to prevent entry of moisture.**
- **Do not leave the reservoir cap removed for a long time.**
- **When replenishing or replacing brake fluid outdoors on a rainy day, exercise care so that no water gets into the brake fluid.**
- **Pay attention that no mineral oil is mixed into brake fluid. Mineral oil will cause swelling of the rubber parts of the brake line, causing insufficient braking force.**
- **Do not mix different types of brake fluid.**

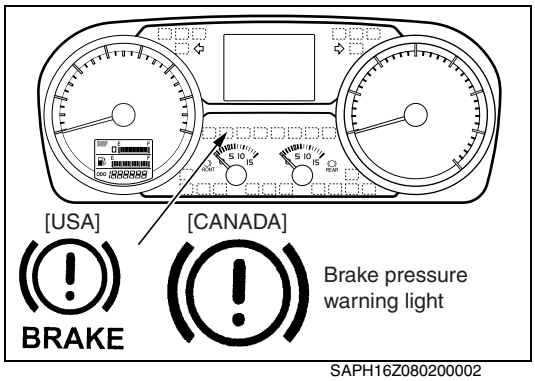


SAPH16Z080200002

**4. BRAKE PRESSURE WARNING LIGHT**

(1) Check for brake pressure warning light failure.
If the brake pressure warning light does not turn on when the starter switch is turned to the ON position, the light has burned out. Replace any burned out light with a new one.

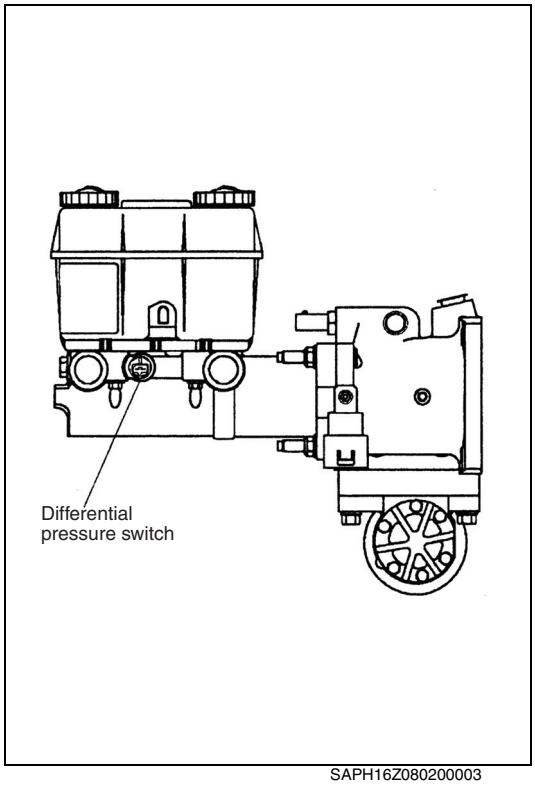


SAPH16Z080200003

(2) Check the differential pressure switch.
Purposely loosen either the front or rear brake line.
Start the engine, depress the brake pedal and confirm that the warning lights up. Confirm warning light condition with other brake line (front and rear). If in both conditions the warning light comes on, the differential pressure switch is normal.

# HYDRO-MAX HYDRAULIC BRAKE BOOSTER AND MASTER CYLINDER

## DATA AND SPECIFICATIONS

EN16Z0802I200001

| | |
|---|---|
| **Manufacturer** | **BOSCH** |
| **Type** | **HYDRO-MAX II and master cylinder** |
| **Master cylinder diameter** | **50.80 mm {2.00 in}** |

## DESCRIPTION

EN16Z0802D100001

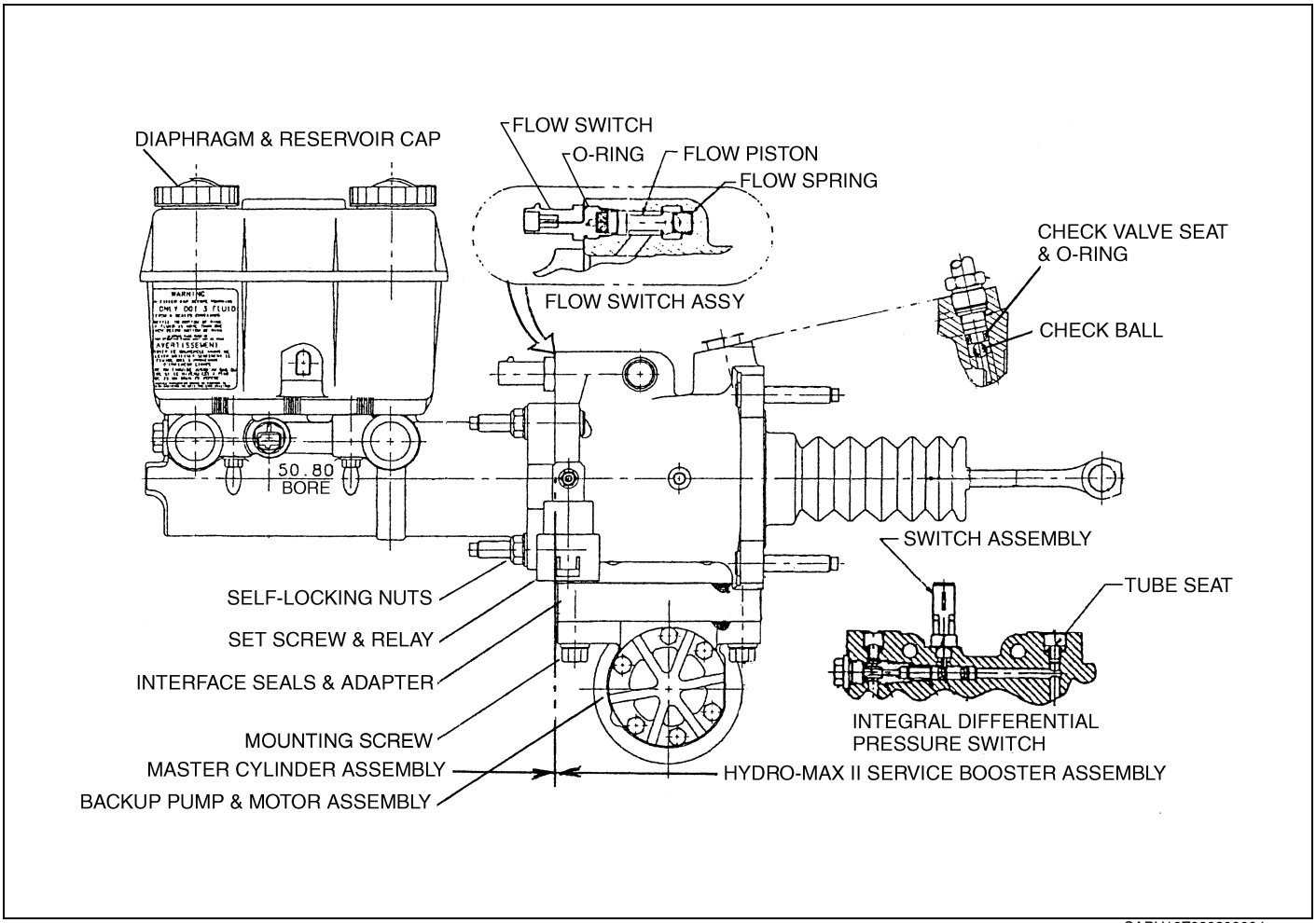


SAPH16Z080200004

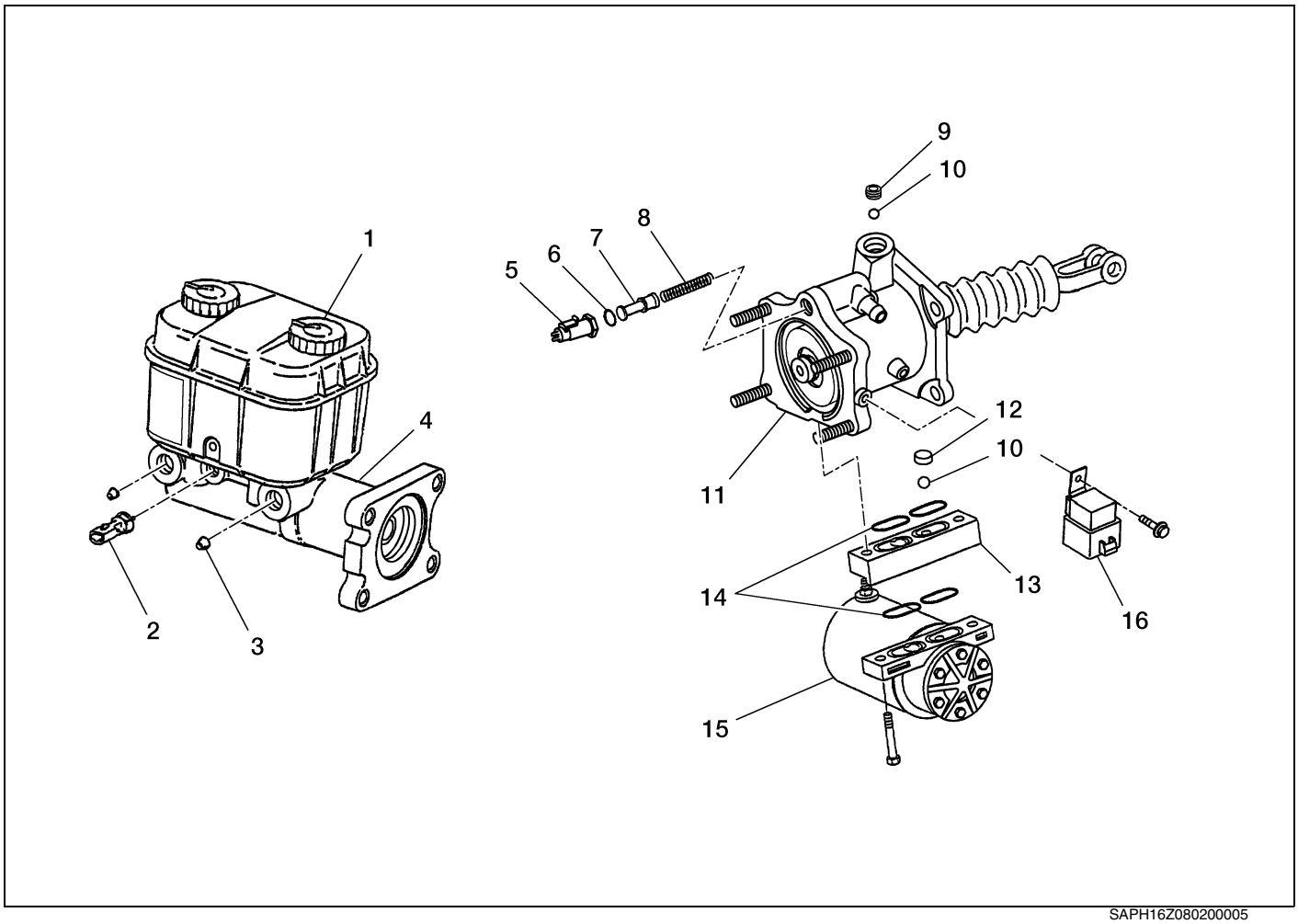


SAPH16Z080200005

| | | | |
|---|---|---|---|
| 1 | Reservoir cap with diaphragm | 9 | Check valve seat |
| 2 | Differential pressure switch | 10 | Check ball |
| 3 | Tube seat | 11 | Hydro-Max booster assembly |
| 4 | Master cylinder assembly | 12 | Check ball retainer |
| 5 | Flow switch | 13 | Adapter |
| 6 | O-ring | 14 | Face seal |
| 7 | Flow piston | 15 | Backup pump |
| 8 | Flow piston spring | 16 | Backup pump relay |

**NOTICE**

**The above parts can be replaced if necessary. Any malfunctions to master cylinder or Hydro-max booster assembly requires complete assembly replacement.**

# PRINCIPLE OF OPERATION

EN16Z0802C100001

**1. HYDRO-MAX BOOSTER**

**During normal system operation, fluid flow from a hydraulic power source (the power steering pump) enters the inlet port of the Hydro-Max booster, flows through the power piston, around the throttle valve and through the flow switch, exiting through the outlet port.**

**Force applied to the brake pedal by the vehicle operator is multiplied by the lever ratio of the pedal mechanism to move the pedal rod of the booster. This movement closes the throttle valve which restricts flow. This restriction of flow, which results in a pressure increase acting on the power piston, applies an amplified force to the master cylinder primary piston. A reaction piston, inside the power piston subassembly, provides the driver "pedal feel" during an application of the brake pedal.**

**Fluid flow through the flow switch opens the backup pump electrical circuit during normal operation. A separate check valve in the backup pump prevents back-flow through the pump during normal power applications. In the event normal flow from the power source is interrupted, the backup pump provides the power at a reduced rate for stopping. Upon flow interruption, the Integral flow switch closes, energizing a relay, providing electrical power to the backup pump.**

**During backup operation, the pump re-circulates fluid within the booster assembly with pressure built on demand via the throttle valve. Fluid is retained within the booster by the inlet port check valve.**

**2. MASTER CYLINDER**

**The primary circuit is separated from the secondary hydraulic circuit. Hydraulic leakage in one circuit does not affect the function of the other circuit.**

**A differential pressure switch is available. It illuminates a light on the dash panel to warn when there is a pressure differential between the primary and secondary brake circuits caused by a leak in one circuit. This may occur when one circuit leaks or is improperly bled.**

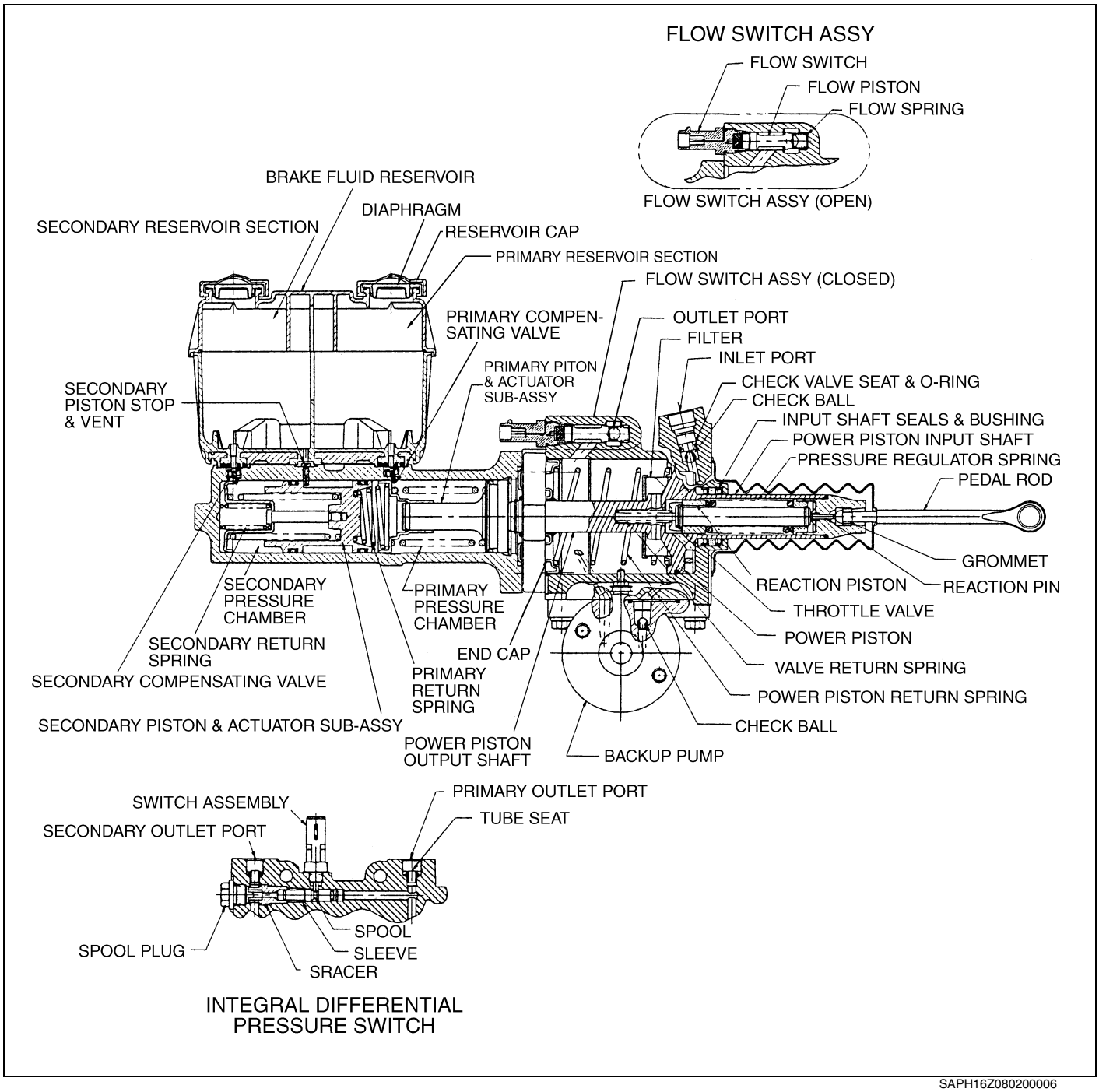


SAPH16Z080200006

**NOTICE**
**This illustration is a representative model for operation reference.**

# COMPONENT LOCATOR

EN16Z0802D100002

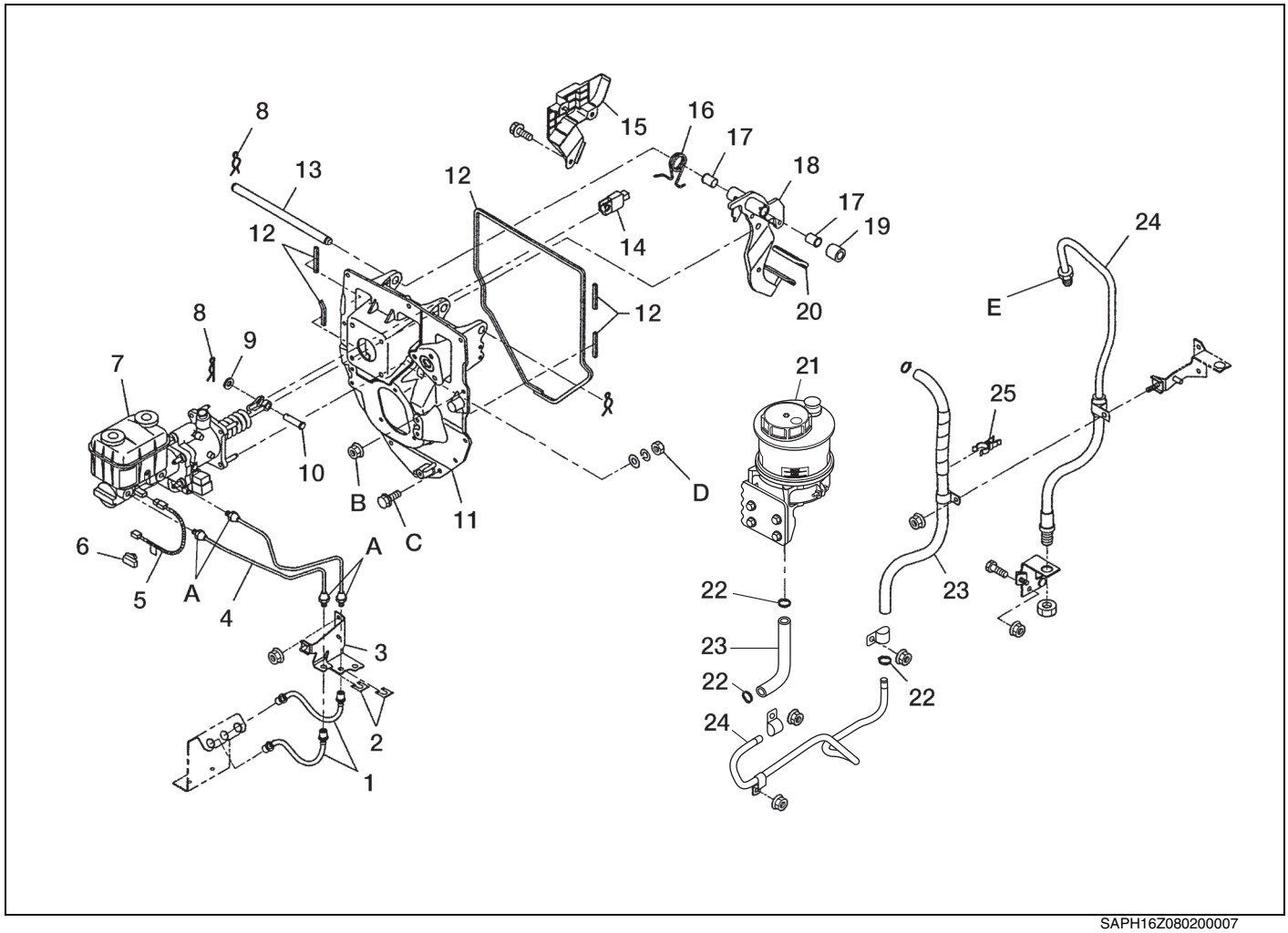


SAPH16Z080200007

| | | | |
|---|---|---|---|
| 1 | Brake hose | 14 | Stop light switch |
| 2 | Brake hose clip | 15 | Stop light switch cover |
| 3 | Brake pipe bracket | 16 | Return spring |
| 4 | Brake pipe | 17 | Bushing |
| 5 | Sub harness | 18 | Brake pedal |
| 6 | Harness clamp | 19 | Collar |
| 7 | Hydro-Max booster and master cylinder | 20 | Pedal pad |
| 8 | Retainer | 21 | Power steering fluid reservoir |
| 9 | Plane washer | 22 | Hose clamp |
| 10 | Clevis pin | 23 | Power steering fluid hose |
| 11 | Pedal bracket | 24 | Power steering fluid pipe |
| 12 | Seal | 25 | Pipe clamp |
| 13 | Shaft | | |

**Tightening torque** **Unit: N·m {kgf·cm, lbf·ft}**

| | | | |
|---|---|---|---|
| A | 20-30 {204-305, 15-22} | D | 33.9-40.7 {346-415, 25-30} |
| B | 18-26 {184-265, 14-19} | E | 22-34 {224-346, 16-25} |
| C | 18-26 {184-265, 14-19} | | |

# HYDRO-MAX BOOSTER

## OVERHAUL

EN16Z0802H200001

### IMPORTANT POINT-DISMOUNTING

**⚠ CAUTION**
**The Hydro-Max booster and the master cylinder use two distinctly different incompatible hydraulic fluids. They must not be mixed. Using the incorrect fluid will permanently damage the seals and can cause malfunctioning brakes.**

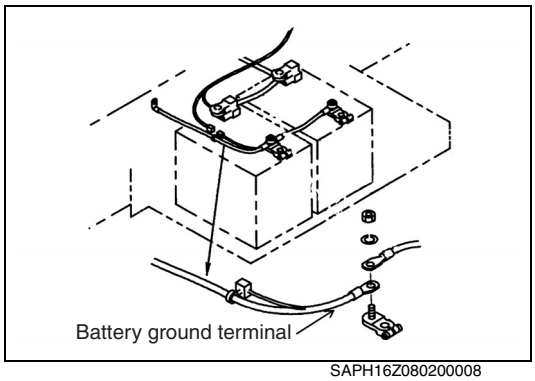

SAPH16Z080200008

**1. BEFORE DISMOUNTING THE HYDRO-MAX BOOSTER**
(1) Be sure to block the wheels.
(2) Disconnect the battery cable from the battery ground terminal.

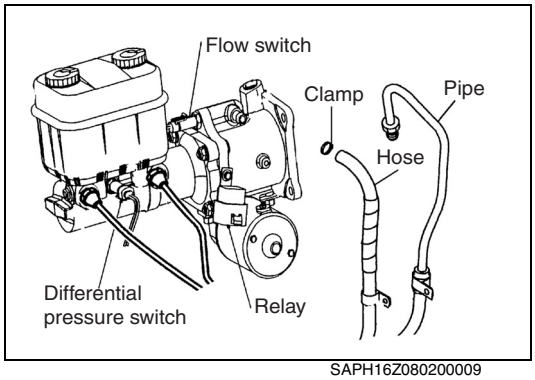

SAPH16Z080200009

**2. DISCONNECT THE HARNESS CONNECTORS AND HARNESS**
(1) Disconnect the connectors of differential pressure switch, flow switch, backup pump sub harness and relay.
(2) Remove the sub harness from the backup pump terminal.

**3. DISCONNECT THE HYRDAULIC HOSE AND PIPE FROM THE HYDRO-MAX BOOSTER**
**Drain the power steering fluid.**

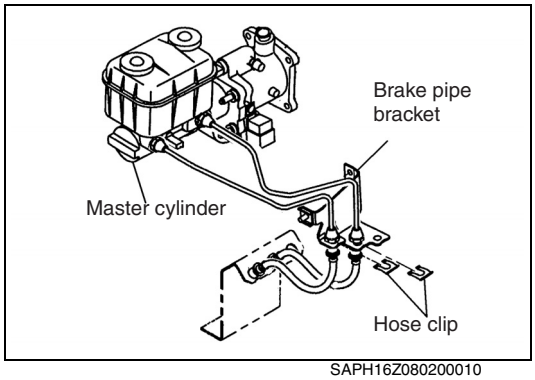

SAPH16Z080200010

**4. DISCONNECT THE MASTER CYLINDER**
**HINT**
- **By removing the brake pipe bracket or brake hose clips, it is possible to remove the Hydro-Max booster without removing the master cylinder from the vehicle.**
- **It is not necessary to disconnect the brake pipes from the master cylinder.**

(1) Remove the brake pipe bracket or brake hose clips.
(2) Remove the nuts to disconnect the master cylinder.

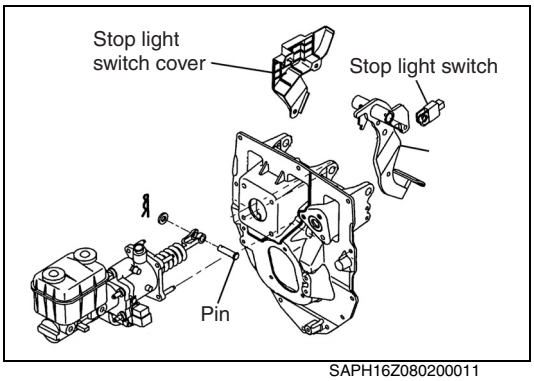

SAPH16Z080200011

**5. REMOVE THE HYDRO-MAX BOOSTER**
(1) Remove the stop light switch cover.
(2) Remove the clevis pin to disconnect the brake pedal, stop light switch and push rod.
(3) Remove the Hydro-Max booster tightening nuts.
(4) Move the master cylinder forward to allow for the Hydro-Max booster removal and support it in that position.
(5) Remove the Hydro-Max booster.

## IMPORTANT POINTS-DISASSEMBLY

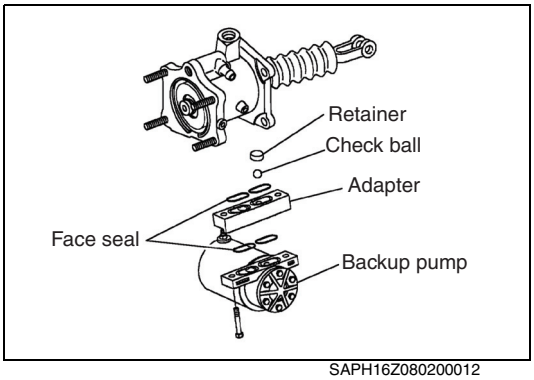

SAPH16Z080200012

**1. REMOVE THE BACKUP PUMP**
(1) Remove the two tightening bolts.
(2) Remove the backup pump and adapter.

**⚠ CAUTION**
**Do not damage the contact surface.**

**NOTICE**
**The power steering fluid will drain out from Hydro-Max booster.**

(3) Remove and discard the four face seals.
(4) Remove the check ball. (If necessary)

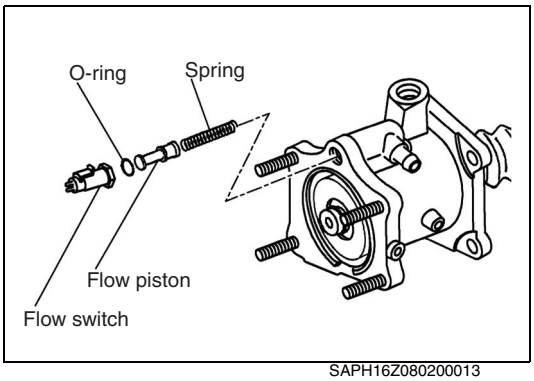

SAPH16Z080200013

**2. REMOVE THE FLOW SWITCH ASSEMBLY**
(1) Remove the flow switch.
(2) Remove and discard the O-ring from the flow switch.
(3) Using a small magnet, remove the flow piston and spring.

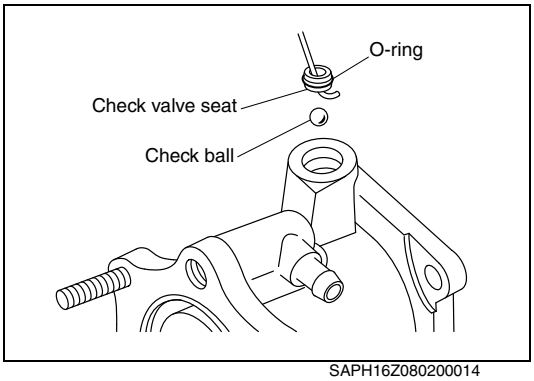

SAPH16Z080200014

**3. REMOVE THE INLET CHECK VALVE**
(1) Using a hook wire remove and discard the inlet check valve seat with O-ring from inlet port.
(2) Remove the check ball.

**4. USE CLEAN POWER STEERING FLUID FOR CLEANING THE REUSED PARTS AND NEW SEALS**

**⚠ CAUTION**
**Do not use brake fluid.**

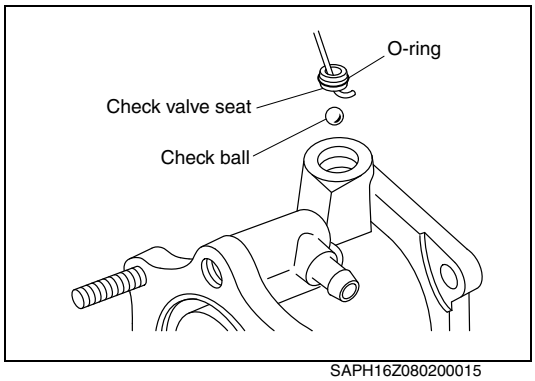

SAPH16Z080200015

## IMPORTANT POINTS-ASSEMBLY

**1. INSTALL THE INLET CHECK VALVE**

(1) Install the check ball to inlet port.
(2) Lubricate and install the O-ring in the inlet check seat.
(3) Install the inlet check valve seat.

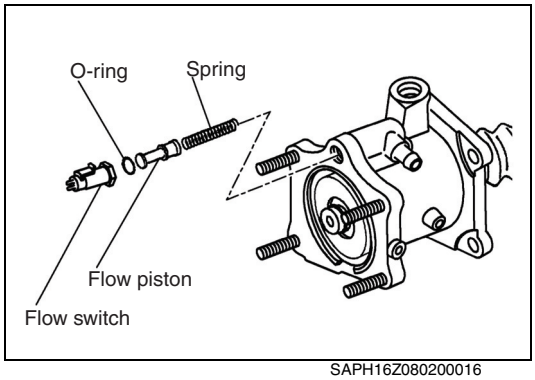

SAPH16Z080200016

**2. INSTALL THE FLOW SWITCH ASSEMBLY**

(1) Install the flow spring and piston.
(2) Lubricate and install the O-ring in the flow switch.
(3) Install the flow switch.
**Tightening Torque:**
**2.3-4.5 N·m {23-45 kgf·cm, 20.4-39.8 lbf·in}**

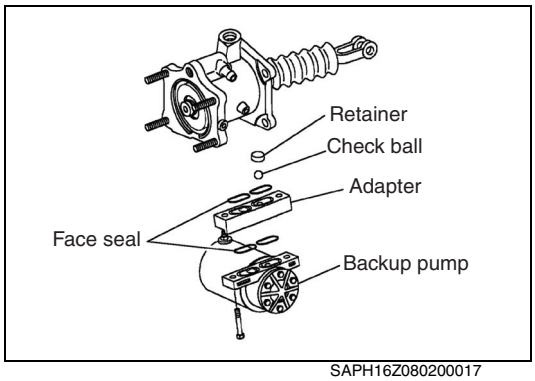

SAPH16Z080200017

**3. INSTALL THE BACKUP PUMP**

(1) Install the check ball in the delivery port (If removed). If not replaced, make sure the check ball is in the delivery port.
(2) Lubricate and install the four face seals in the adapter and backup pump.
(3) Install the adapter and backup pump.

**NOTICE**
**Ensure that the delivery ports for hydraulic pump, adaptor and Hydro-Max booster correspond during installation.**
**Do not confuse mating surfaces.**
**Install the backup pump in its proper position.**

(4) Tighten the two bolts.
**Tightening Torque:**
**24.5-33.9 N·m {250-345 kgf·cm, 18-25 lbf·ft}**

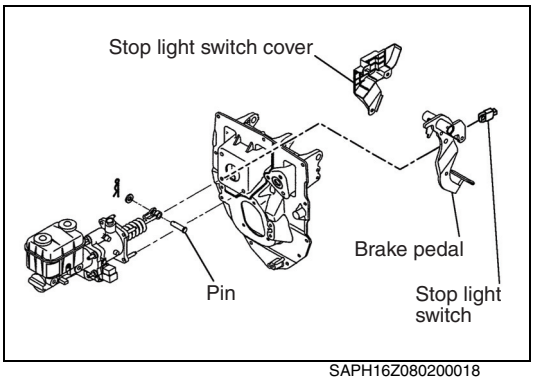

SAPH16Z080200018

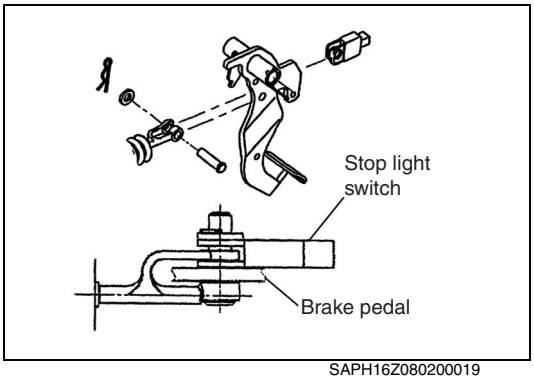

SAPH16Z080200019

## IMPORTANT POINTS-MOUNTING

**1. INSTALL THE HYDRO-MAX BOOSTER**

(1) Install the Hydro-Max booster and tighten the nuts.
**Tightening Torque:**
**33.9-40.7 N·m {346-415 kg·cm, 25-30 lbf·ft}**

(2) Install the clevis pin to connect the brake pedal, stop light switch and push rod.

(3) Install the stop light switch cover.

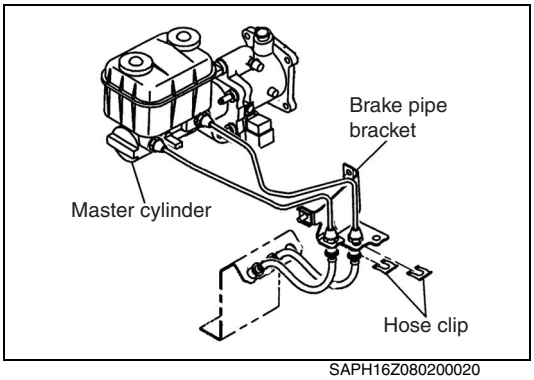

SAPH16Z080200020

**2. CONNECT THE MASTER CYLINDER**

(1) Connect the master cylinder to Hydro-Max booster and tighten the nuts.
**Tightening Torque:**
**33.9-40.7 N·m {346-415 kgf·cm, 25-30 lbf·ft}**

(2) Install the brake pipe bracket or brake hose clips.

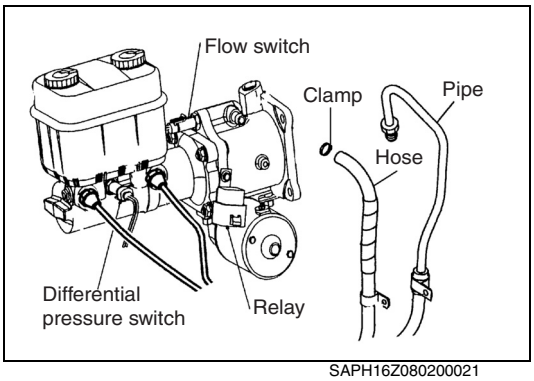

SAPH16Z080200021

**3. CONNECT THE HYRDAULIC HOSE AND PIPE FROM THE HYDRO-MAX BOOSTER**

(1) Connect hydraulic pipe and tighten the flare nut.
**Tightening Torque:**
**22-34 N·m {224-346 kgf·cm, 16-25 lbf·ft}**

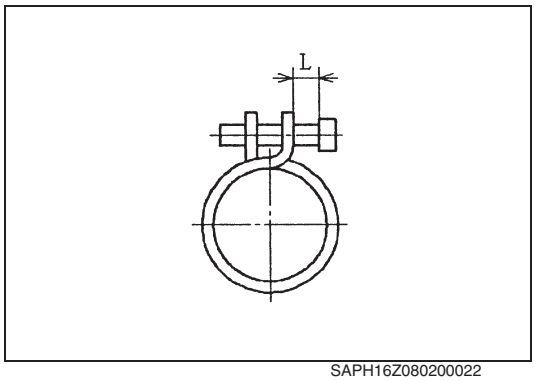

SAPH16Z080200022

(2) Connect hydraulic hose and tighten the clamp.
Tighten the clamp until dimension L = 4-5 mm (0.16-0.19 in.).

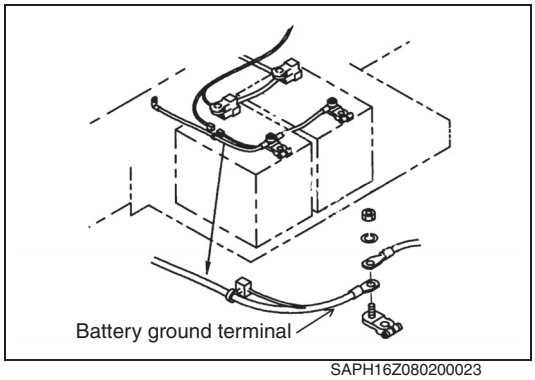

SAPH16Z080200023

**4. CONNECT THE HARNESS CONNECTORS AND HARNESS**

(1) Install the sub harness to the backup pump terminal.
(2) Connect the connectors of differential pressure switch, flow switch, backup pump sub harness and relay.

**5. CONNECT THE BATTERY CABLE TO THE BATTERY GROUND TERMINAL**

**6. BLEEDING OF HYDRO-MAX SYSTEM**

**Refer to POWER STEERING SYSTEM AIR BLEEDING of chapter "BRAKE EQUIPMENT (MODELS WITH HYDRAULIC BRAKE)" BR01-12.**

**⚠ WARNING**

**Any Hydro-Max booster or brake hydraulic line removed or disconnected should be properly bled before attempting to move the vehicle, as the braking force will not be sufficient.**

**7. BLEEDING OF BRAKE HYDRAULIC SYSTEM**

**If the master cylinder was removed, bleed the brake hydraulic system.**

**Refer to BRAKE SYSTEM AIR BLEEDING of chapter "BRAKE EQUIPMENT (MODELS WITH HYDRAULIC BRAKE)" BR01-10.**

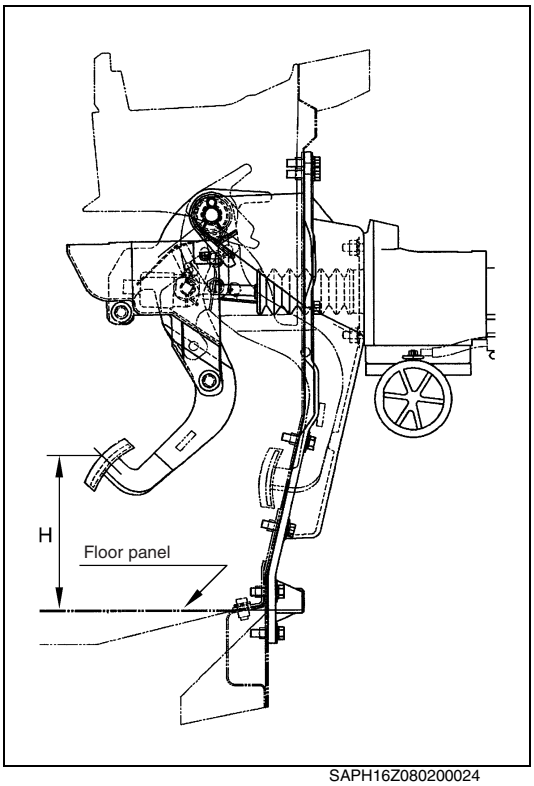


SAPH16Z080200024

**8. BRAKE PEDAL HEIGHT**

**Check that the pedal height H from the floor is within the standard dimension.**

**Standard: 162.5-172.5 mm {6.4-6.7 in}**

# MASTER CYLINDER

## OVERHAUL

EN16Z0802H200002

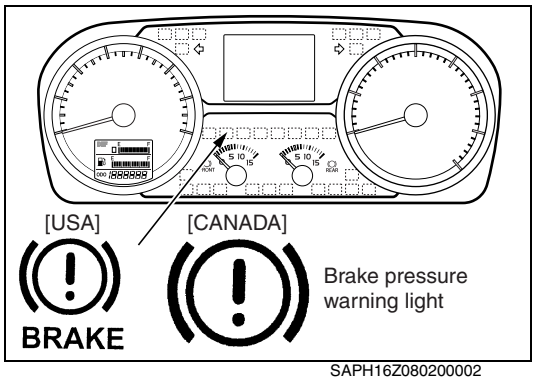

SAPH16Z080200002

### IMPORTANT POINTS-DISMOUNTING

**⚠ WARNING**

**If the brake pressure warning light continues to light up after the engine has started, the vehicle should not be operated for safety reasons. During normal driving a longer stopping distance is required so extreme caution should be taken as there is a risk of personal injury or property damage.**

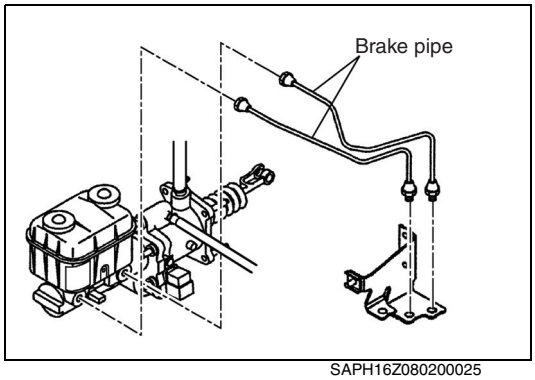

SAPH16Z080200025

**1. BLOCK THE WHEELS**

**2. DISCONNECT THE BRAKE PIPES**

(1) Drain the fluid from the master cylinder into a container.

(2) Disconnect the brake pipe from the master cylinder.

**NOTICE**

**Observe the position of the brake pipe to master cylinder before removal to prevent mix-up during assembly.**

(3) Cover the pipe end to prevent entry of foreign matter.

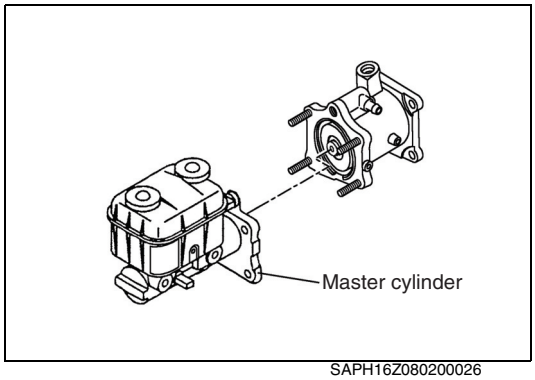

SAPH16Z080200026

**3. DISCONNECT THE MASTER CYLINDER**

(1) Remove the tightened nuts.

(2) Disconnect the master cylinder.

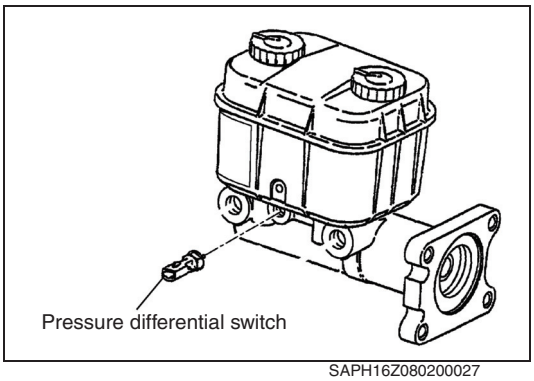

SAPH16Z080200027

## IMPORTANT POINTS-ASSEMBLY

**1. INSTALL THE PRESSURE DIFFERENTIAL SWITCH**
**Tightening Torque:**
**1.1-1.7 N·m {11-17 kgf·cm, 9.7-15 lbf·in.}**

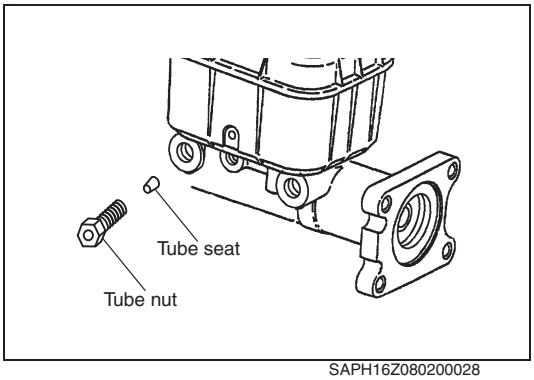

SAPH16Z080200028

**2. INSTALL THE TUBE SEAT**
(1) If the tube seat was removed, install the new parts.
Press the tube seat by using a tube nut.
Make sure the seat is completely inserted in the bottom.
(2) Check installation condition of the sealing surface.
If necessary, clean and rinse the master cylinder ports to remove any metal fragments.

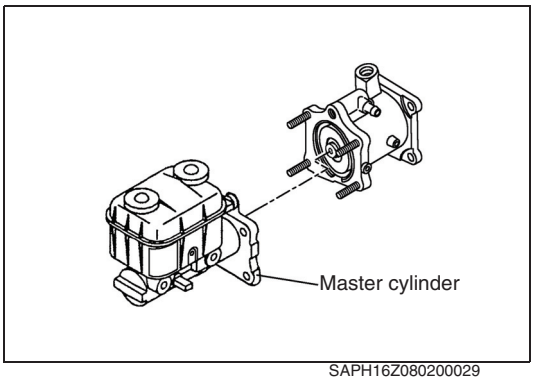

SAPH16Z080200029

## IMPORTANT POINTS-MOUNTING

**1. CONNECT THE MASTER CYLINDER**
(1) Connect the master cylinder to Hydro-Max booster.
(2) Tighten the nut.
**Tightening Torque:**
**33.9-40.7 N·m {346-415 kgf·cm, 25-30 lbf·ft}**

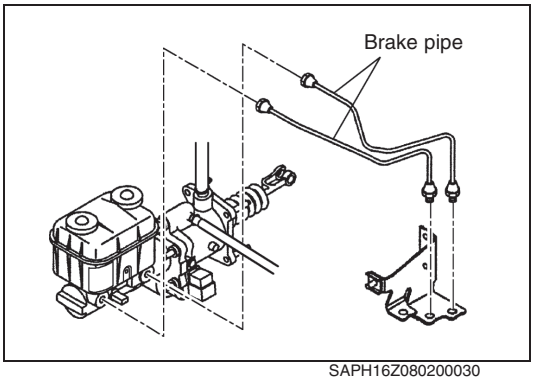

SAPH16Z080200030

**2. CONNECT THE BRAKE PIPES**
(1) Remove cover from the pipe end.
(2) Connect the brake pipe to the master cylinder.
**Tightening Torque:**
**20-30 N·m {204-305 kgf·cm, 15-22 lbf·ft}**

**3. BRAKE SYSTEM AIR BLEEDING**
**Refer to BRAKE SYSTEM AIR BLEEDING of chapter "BRAKE EQUIPMENT (MODELS WITH HYDRAULIC BRAKE)" BR01-10.**

# PRESSURE TESTS

EN16Z0802H600002

**1. CHECK THE BRAKE LINE PRESSURE**

(1) To measure the brake line pressure, install a 0 to 13,800 kPa {140 kgf/cm$^2$, 2,000 lbf/in$^2$} gauge to the brake caliper.

(2) Depress the brake pedal while the engine is not running.
The backup pump should start and produce pressure approximately 5,515 kPa {56 kgf/cm$^2$, 800 lbf/in$^2$}.

(3) Warm-up the engine until the power steering fluid reaches normal operating temperature.

(4) Depress the brake pedal while the engine is at idling speed.
The pressure should be approximately 12,400 kPa {126 kgf/cm$^2$, 1,800 lbf/in$^2$}.

**2. AIR BLEEDING**

(1) Remove the pressure gauge.

(2) Bleed air from the pressure gauge installed line.

# ABS MODULATOR

## DATA AND SPECIFICATIONS

EN16Z0802I200002

| | |
|---|---|
| **Manufacturer** | **MERITOR WABCO** |
| **Type** | **Hydraulic ABS modulator** |

## DESCRIPTION

EN16Z0802D100003

**E version**

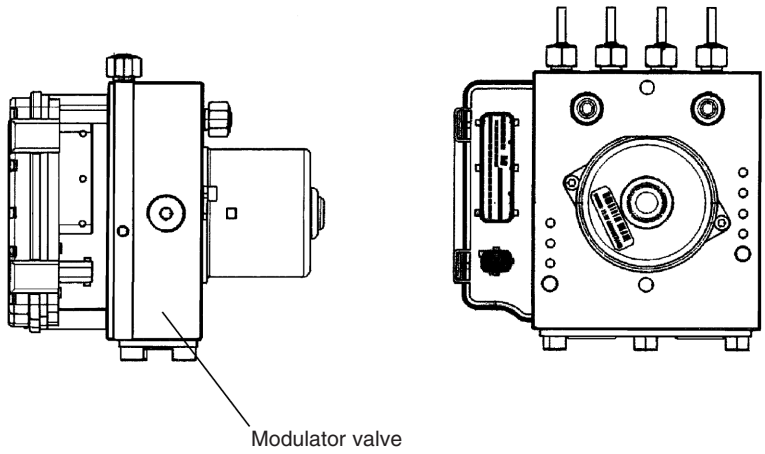


SAPH16Z080200031

**NOTICE**

**For removal and installation of ABS MODULATOR. Refer to the section "COMPONENT REMOVAL AND INSTALLATION" in the chapter "BRAKE CONTROL SYSTEM (ABS: HYDRAULIC (E VERSION))" (S7-CNAE14* or S7-UNAE14*).**

# WHEEL BRAKE (TYPE: 4 PISTON)

## DATA AND SPECIFICATIONS

EN16Z0802I200003

| Manufacturer | | MERITOR |
|---|---|---|
| Type | | 4 PISTON FIXED MOUNT CALIPER |
| Brake pad | Thickness Above Metal (New) | 0.73" (18.5 mm) |
| | Minimum Thickness Above Metal (Discard) | 0.125" (3.2 mm) |
| Brake Fluid | High-Performance Brake Fluid | DOT 3 or DOT 4 |
| Rotor | Rotor Diameter | 15.38" (390.7 mm) |
| | Thickness (New) | 1.54" (39.1 mm) |
| | Thickness (Discard) | 1.42" (36.1 mm) |
| Vehicle Model | | HINO 238, 258, 268 (NE8J) and 338 (NF8J) |

# DESCRIPTION

EN16Z0802D100004

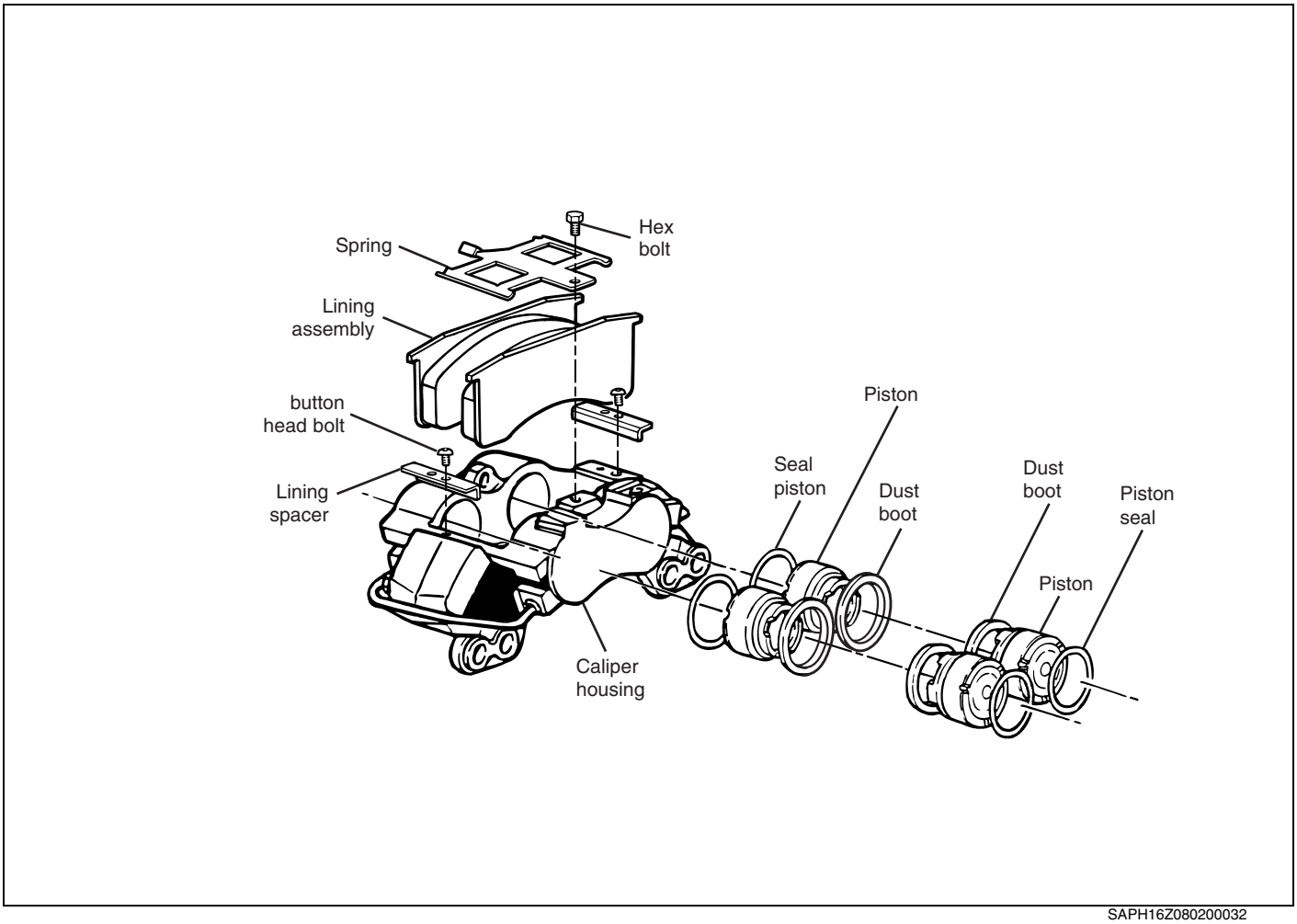


SAPH16Z080200032

## TORQUE SPECIFICATIONS

| Description | Specification |
|---|---|
| **ABS Sensor Bolts — 5/16-18** | **9-12 lb-ft (12.2-16.3 N·m)** |
| **Brake Hose Hold Down Clamp Bolt — 5/16-18** | **9-12 lb-ft (12.2-16.3 N·m)** |
| **Banjo Bolt** | **30-40 lb-ft (40.8-54.4 N·m)** |
| **Pad Retainer Spring Bolt — M10 x 1.5 x 16** | **28-32 lb-ft (38.1-43.5 N·m)** |
| **Caliper-to-Support Bolts — M20** | **320-360 lb-ft (435.2-489.6 N·m)** |
| **Cross Over Tube Nuts — 7/16-24** | **9-12 lb-ft (12.2-16.3 N·m)** |
| **Bleed Screw — 7/16-24** | **9-12 lb-ft (12.2-16.3 N·m)** |
| **Lining Rail Covers — M8 x 1.25 x 14** | **12-18 lb-ft (16.3-24.5 N·m)** |
| **Rotor to Hub Bolt (9/16-12 bolt)** | **100-125 lb-ft (136.0-170.0 N·m)** |
| **Rotor to Hub Bolt (9/16-18) with Lock Nuts** | **70-95 lb-ft (95.2-129.2 N·m)** |
| **Rotor to Hub Bolt (9/16-18) with Plain Nuts** | **130-165 lb-ft (176.8-224.4 N·m)** |
| **Support to Axle**<br>**(5/8-18 bolt)**<br>**(9/16-18 bolt)** | <br>**190-250 lb-ft (258.4-340.0 N·m)**<br>**130-165 lb-ft (176.8-224.4 N·m)** |

# TROUBLESHOOTING

EN16Z0802F300001

| Symptom | Possible cause | Remedy/Prevention |
|---|---|---|
| **Excessive Pedal Effort** | Pads worn below minimum thickness | Install new pads. |
| | Faded, overheated condition, glazed pads, blued or heat-checked rotors | Replace the rotor and/or reface pads if sufficient lining remains. |
| | Grease, oil and/or brake fluid on linings | Install new pads in the axle sets. |
| | Seized or frozen pistons | Disassemble the calipers and free pistons, or replace the caliper. |
| **Pistons, or replace the caliper. Pedal Pulsation (Brake Roughness or Chatter)** | Excessive lateral runout of brake rotor | Check with a dial indicator. Install a new rotor if the runout exceeds the maximum specified. |
| | Excessive out-of-parallelism of brake rotor | Check the parallelism or rotor thickness variation with a micrometer. Resurface the rotor or install a new rotor if the parallelism exceeds the maximum allowed. |
| | Loose or worn steering or suspension parts | Replace the parts and realign. |
| | Excessive front bearing clearance | Readjust the bearing to specifications. |
| **Vehicle Pulls to One Side** | Brake fluid, oil and/or grease on linings | Install new pads in the axle sets. |
| | Unmatched linings, uneven lining wear, distorted pads | Install new pads in the axle sets. |
| | Rough rotor surfaces on one rotor | Resurface or replace the rotor in the axle sets. |
| | Seized or frozen pistons | Disassemble the caliper and repair or replace. |
| | Loose caliper mounting bolts | Tighten to specifications. |
| | Uneven tire pressure, tread wear or size, right to left | Equalize to the recommended pressures. Install the correct size tires with good tread. |
| | Excessive rotor parallelism or runout | Resurface or replace the rotor. |
| | Restricted hose or line | Examine the hoses and lines, and replace as necessary. |
| | Front end out of alignment | Reset the alignment. |
| **Leaky Caliper** | Cylinder bore surface scored or corroded | Disassemble the calipers, clean the bore and replace the seals and boots. |
| | Caliper piston seal damaged or worn | Disassemble the calipers and install new seals and boots. |
| | Caliper piston damaged | Replace the piston. |

| Symptom | Possible cause | Remedy/Prevention |
|---|---|---|
| **No Braking Effect or Excessive Pedal Travel** | Reservoir fluid level low | Check for causes of fluid leak, repair as required and refill the reservoir. Bleed the system as needed. |
| | Air in the hydraulic system | Bleed the system. |
| | Bleed screw loose or open | Bleed the system and tighten the bleed screw. |
| | Caliper piston seal damaged | Disassemble the caliper and replace the piston seals. Replace the piston if it is damaged. |
| | Excessive rotor runout or bent rotor | Check the rotor with a dial indicator. Install a new rotor if the runout exceeds the maximum specified. |
| | Worn or excessively loose wheel bearings | Adjust or replace the bearings as needed. |
| | Low quality brake fluid | Drain and clean the system. Replace with the recommended brake fluid. |
| | Weak brake hose that expands under pressure | Replace the hoses. |
| **Brake Noise (Chatter)** | Excessive lateral runout of rotor | Check the runout with a dial indicator. Install a new rotor if the runout exceeds the maximum specified. |
| | Lack of rotor parallelism | Check the parallelism with a micrometer. Resurface or install a new rotor as required. |
| | Loose wheel bearing | Readjust the bearing to the specified torque. |
| **Brake Noise (Scraping)** | Rust or mud build-up on edges of rotor and on caliper housing | Clean or replace as necessary. |
| | Worn pad or pad installed backward | Replace the pads in the axle sets only with the friction surface against the rotor. |
| | Incorrect caliper alignment permitting rotor to scrape on housing | Correct the alignment. |
| **Brake Noise (Groan)** | Pressure on the brake pedal too light | Slightly increase the pedal effort to eliminate the noise. |
| **Brake Noise (Rattle)** | Excessive clearance between the shoe and caliper | Install new pads. |
| | Pad retainer spring missing or not correctly positioned | Install a new pad retainer spring or position it correctly. |
| **Brake Noise (Squeal)** | Glazed pads | Resurface or replace the pads in the axle sets only. |
| | Weak pad retainer spring | Install a new pad retainer spring. |
| | Pad wear indicator contacting rotor | Install new pads in the axle sets only. |
| | Foreign material embedded in linings | Replace the pads in the axle sets only. |

## REMOVAL

**⚠ WARNING**
**To prevent serious personal injury, always wear safe eye protection when you perform vehicle maintenance or service.**

**1. BRAKE PADS**

(1) Visually inspect all brake pads. Replace pads when the remaining lining reaches 1/8-inch (3.175 mm) thickness.

- **If you replace pads:** Replace all disc brake pads at the same time to maintain original brake balance.
- **If a complete vehicle pad replacement is not necessary or desirable:** Replace the pads on both wheel ends on the same axle.

**2. REPLACE BRAKE PADS**

(1) Raise and support the vehicle.
(2) Remove the wheel and tire assembly according to manufacturer's recommendation.
(3) Remove the master cylinder reservoir filler cap. Check the brake fluid level in the reservoir. If necessary, remove fluid to keep the reservoir from overflowing when compressing pistons into the caliper.
(4) Remove the pad retainer spring bolt.

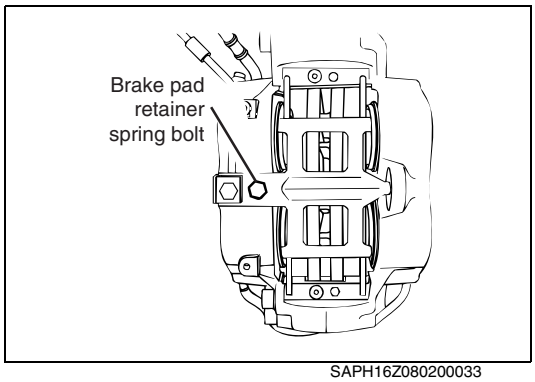

SAPH16Z080200033

(5) Compress the caliper pistons.

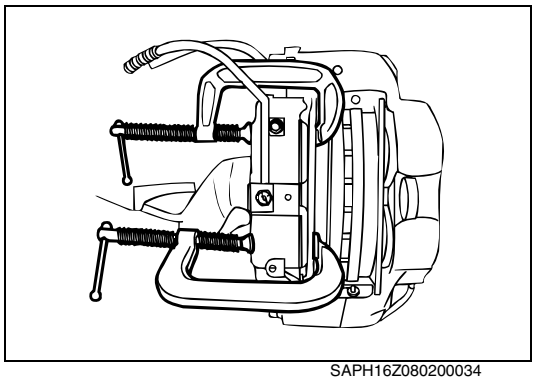
SAPH16Z080200034

(6) Remove the brake pads.

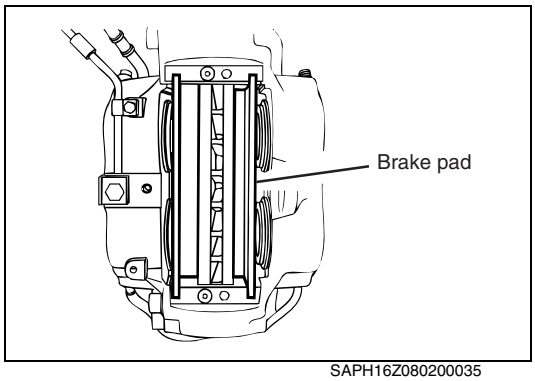

SAPH16Z080200035

### 3. BRAKE CALIPER

**⚠ WARNING**

**Park the vehicle on a level surface. Block the wheels to prevent the vehicle from moving. Support the vehicle with safety stands. Do not work under a vehicle supported only by jacks. Jacks can slip and fall over. Serious personal injury can result.**

(1) Raise and support the vehicle.
(2) Remove the tire and wheel assembly according to manufacturer's instructions.
(3) Remove the brake hose hold down clamp bolt, if equipped.

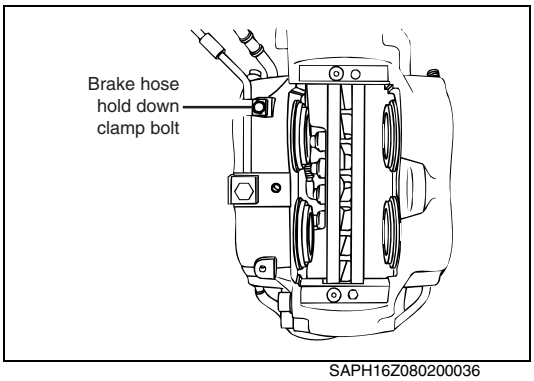

SAPH16Z080200036

(4) Remove the brake hose/tube from the caliper.

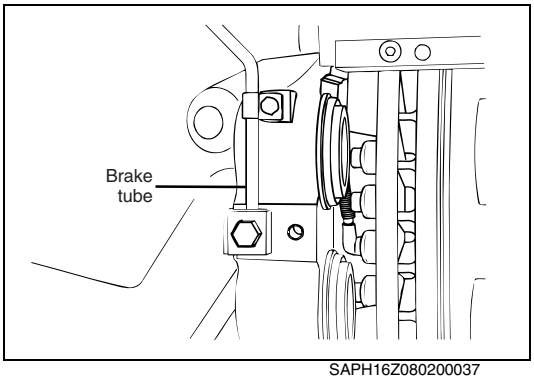

SAPH16Z080200037

(5) Remove four caliper-to-support assembly bolts. **Do not disassemble the four bolts joining the two halves of the caliper.**

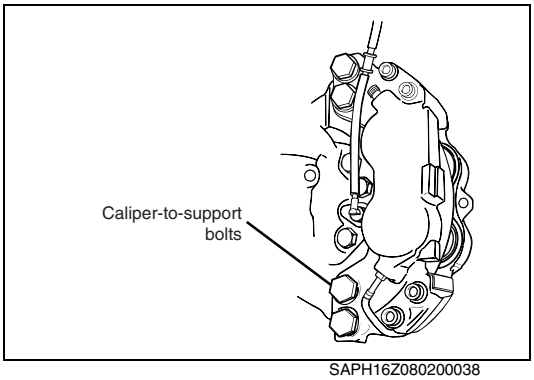

SAPH16Z080200038

**4. SUPPORT**

(1) Remove the caliper from vehicle as described in Brake Caliper in this section.
(2) Remove the splash shield if installed from the support.
(3) Remove the hub and rotor assembly according to vehicle manufacturer's recommended service procedure.
(4) Remove the ABS sensor.
(5) Remove the support-to-axle mounting bolts.

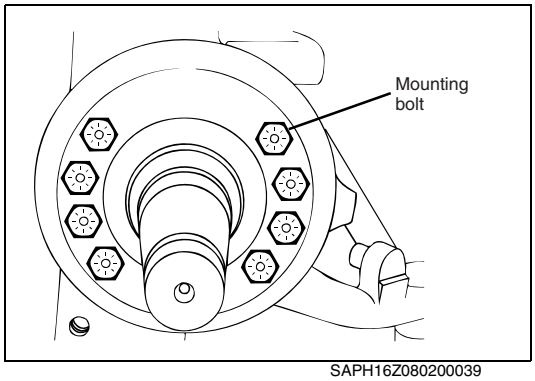

SAPH16Z080200039

**5. ROTOR**

**NOTICE**

**The thickness of the resurfaced rotor must exceed the minimum thickness dimension stamped or cast into the rotor. Replace if necessary.**

(1) Check the rotor while assembled to the hub or spoke wheel and mounted on the axle spindle. The lateral runout of the rotor friction surfaces should not exceed 0.015-inches (0.381 mm) total indicator reading (TIR). The thickness variation of the rotor should not exceed 0.0012-inches (0.0300 mm).

- **If the lateral runout and/or the thickness variation exceed the above values:** Resurface or replace the rotor.

(2) Remove the caliper. Refer to Brake Caliper in this section.
(3) Remove the hub/spoke wheel and rotor assembly from the axle according to vehicle manufacturer's recommendation.
(4) Remove the hub-to-rotor attachment fasteners (hat-shaped rotor). For the U-shaped rotor, remove the studs holding the hub and rotor.

**6. DISASSEMBLE AND OVERHAUL THE BRAKE CALIPER**

(1) Remove the brake caliper. Refer to Brake Caliper in this section.
(2) Drain all fluid from the caliper.
(3) Push all four pistons to the bottom of their bores.
(4) Remove the piston boots by prying the metal ring portion of the boot out of the bore with a screwdriver. Use care to avoid damage to the piston or bore. Discard the boots.

**NOTICE**

**The C-clamp must be between the pistons on the opposite side so they may move to the wood block without striking the C-clamp. Cover pistons with shop rag to prevent brake fluid spray.**

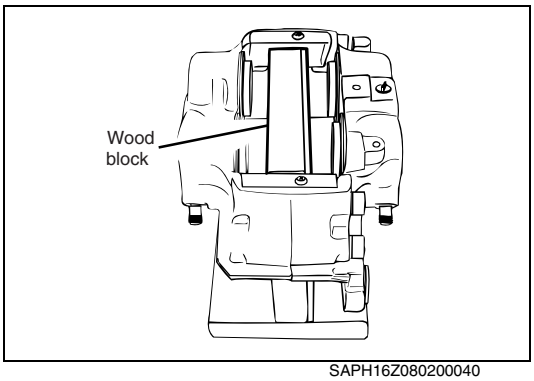

SAPH16Z080200040

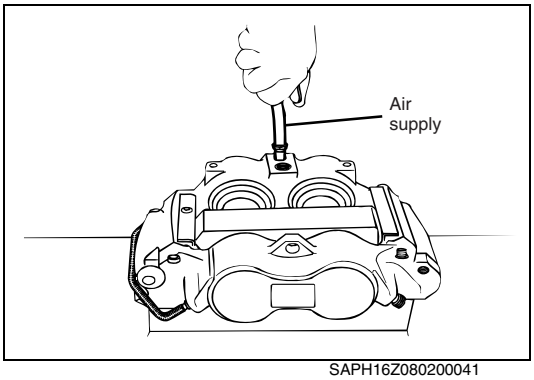

SAPH16Z080200041

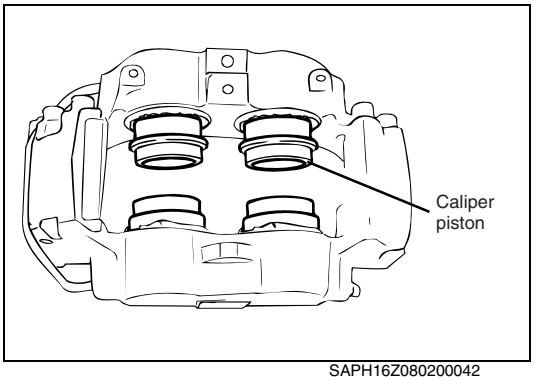

SAPH16Z080200042

(5) Place a block of wood (7-5/8 x 3-1/2 x 2-9/16-inches thick) between the caliper pistons. Use a C-clamp to hold the block of wood against the pistons on one side of the caliper.

**⚠ WARNING**
**When you use compressed air to remove the pistons form the caliper bore, do not place your hands or fingers near the bore to catch or protect the pistons. Serious personal injury can result.**

**⚠ CAUTION**
**When you remove the pistons from the caliper bore, only direct enough compressed air into the caliper brake fluid inlet to ease the pistons out of the bore. Do not exceed 25 psi (172 kPa). Damage to components will result.**

(6) Apply low air pressure (no more than 25 psi [172 kPa]) to the fluid port in the caliper to move the caliper pistons out to the wood block.

(7) With the pistons in contact with the wood block, there will be a small amount of seal engagement remaining. Remove the C-clamp and the wood block. The pistons may now be removed by hand.

(8) To remove the pistons from the other side of the caliper, place the block of wood now over the empty bores (from where the pistons have been removed) with a thick sheet of rubber (3/8-inch) between the wood and the caliper bores.

**NOTICE**
**Use the C-clamp to hold the block of wood in position against the empty bores. The C-clamp must be between the pistons on the opposite side so they may move out to the wood block without striking the C-clamp. Cover pistons with a shop rag to prevent brake fluid spray.**

(9) Apply low air pressure (no more than 25 psi [172 kPa]) to the fluid port in the caliper to move the caliper pistons out to the wood block.

(10) With the pistons in contact with the wood block, there will be a small amount of seal engagement remaining. Remove the C-clamp and the wood block. The pistons may now be removed by hand.

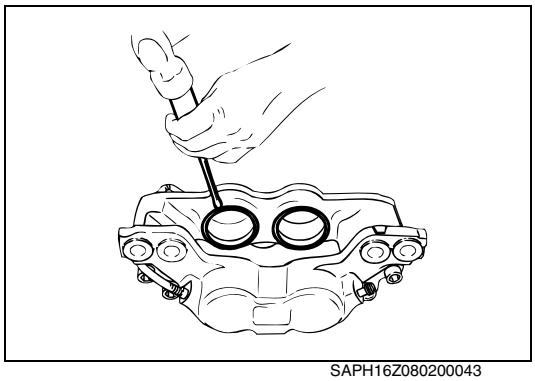

SAPH16Z080200043

(11) Remove the piston seals with a non-metallic device and discard them. Do not knock, scratch or otherwise scar piston bores or seal grooves.

**NOTICE**
**Do not hone the caliper bores. Pistons are not available for honed caliper bores. If the caliper bores are excessively scored or corroded, install a new caliper.**

**⚠ WARNING**
**To prevent serious eye injury, always wear safe eye protection when you perform vehicle maintenance or service.**

**Solvent cleaners can be flammable, poisonous and cause burns. Examples of solvent cleaners are carbon tetrachloride, emulsion-type cleaners and petroleum-based cleaners. To avoid serious personal injury when you use solvent cleaners, you must carefully follow the manufacturer's instructions and these procedures:**

- **Wear safe eye protection.**
- **Wear clothing that protects your skin.**
- **Work in a well-ventilated area.**
- **Do not use gasoline or solvents that contain gasoline. Gasoline can explode.**
- **You must use hot solution tanks or alkaline solutions correctly. Carefully follow the manufacturer's instructions.**

## CLEAN, DRY AND INSPECT PARTS

### 1. CLEAN PARTS FOR GROUND OR POLISHED METAL PARTS

**⚠ CAUTION**
**Do not use hot solution tanks or water and alkaline solutions to clean ground or polished parts. Damage to parts will result.**

Use a cleaning solvent or kerosene or diesel fuel to clean ground or polished metal parts or surfaces.

### 2. FOR ROUGH METAL PARTS

Use a cleaning solvent or a weak alkaline solution in a hot solution tank to clean rough metal parts.
If you use a hot solution tank, follow the instructions below.

(1) Leave the rough parts in the tank until they are completely cleaned and heated.
(2) Remove the rough parts from the tank.
(3) Wash the parts with water until you remove the alkaline solution.

### 3. DRY AND INSPECT PARTS

(1) Use soft, clean paper or cloth rags or compressed air to completely dry parts immediately after you clean them.
(2) Carefully inspect all parts for wear or damage before you assemble them.
(3) Repair or replace worn or damaged parts.

### 4. APPLY CORROSION PROTECTION

(1) Apply a thin layer of brake grease to cleaned, dried parts. Be careful that you do not apply the grease to the linings or rotor.
(2) If you will store the parts, apply a special material, which prevents corrosion and rust, to all surfaces. Store parts inside special paper or other material that prevents rust and corrosion.

## ASSEMBLY

**⚠ WARNING**
**To prevent serious eye injury, always wear safe eye protection when you perform vehicle maintenance or service.**

### 1. BRAKE CALIPER

**NOTICE**
**When using compressed air, use air lines that are completely free of oil and moisture.**
**All brake parts must be clean and completely dried of cleaning fluid. Use ONLY ArvinMeritor replacement parts to ensure proper caliper performance.**

(1) Clean caliper, caliper piston bores and fluid ports with solvent. Use compressed air to clean out and dry grooves and passages.
(2) Dip new piston seals in new, clean DOT 3 hydraulic brake fluid and install in piston seal groove in caliper piston bores. Make sure that they are properly seated. Apply a thin film of silicon grease or brake fluid to the caliper bore seal land between the piston boot and seal groove. Apply the grease or brake fluid around the entire circumference of the caliper bore.

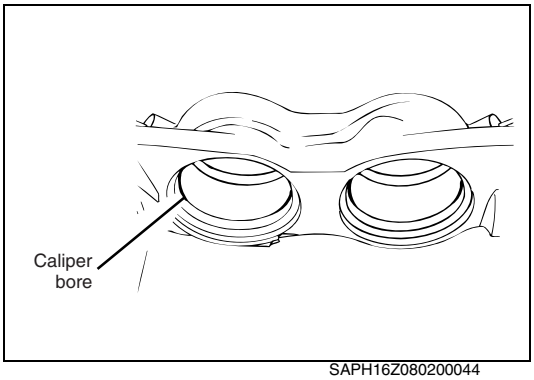

SAPH16Z080200044

(3) Apply DOT 3 hydraulic brake fluid to the outside of the caliper pistons and install them in caliper bores, making sure that they are square to the bore.

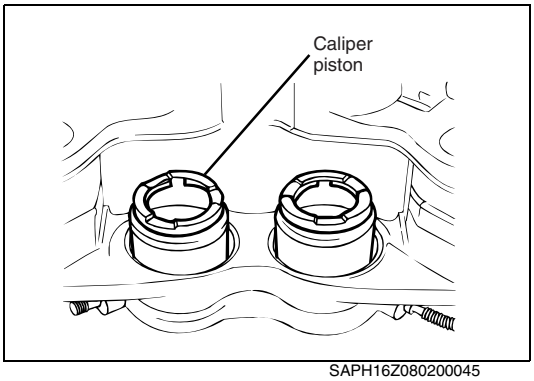

SAPH16Z080200045

(4) Be careful not to cock the caliper pistons and press them into the bores.

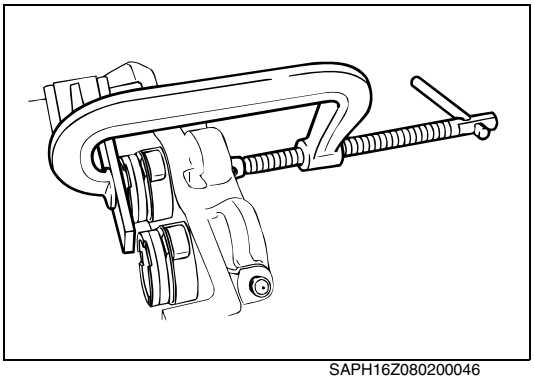
SAPH16Z080200046

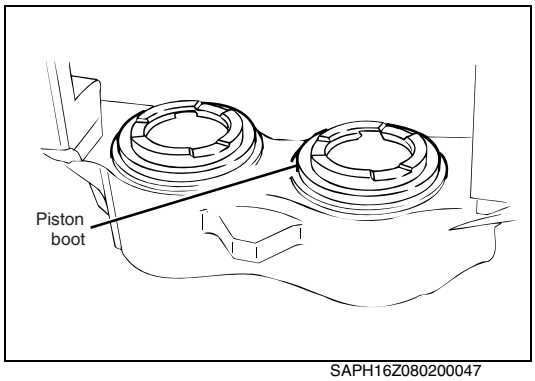

SAPH16Z080200047

(5) Install the piston boots over the projecting ends of the pistons and press the ring side of the boots into the boot bore. An old bearing cup equal to the boot ring size helps install the boots. Make sure the piston boot bead is seated back against the shoulder of the projecting end of the piston. Boots for the 64 mm and 70 mm pistons are color-coded.

(6) If required, replace the two stainless steel wear rails by removing the button head bolts.

**NOTICE**

**Inspect the caliper prior to reinstalling it onto the support. Pistons must be fully retracted into the caliper. Piston boots must be fully seated in the caliper boot grooves.**

## INSTALLATION

**1. ROTOR**

**NOTICE**

**Do not resurface a new replacement rotor.**

(1) To install, reverse the removal processes, making sure that the mating surfaces of the hub or spoke wheel and rotor are clean and free of rust build-up.

(2) Check the rotor for lateral runout. If the lateral runout exceeds 0.015-inches (0.381 mm), the rotor may be rotated to a different mounting hole position on the hub or spoke wheel to reduce the value.

**2. CALIPER**

(1) Inspect the caliper for leakage, damage or defects to piston seals or pistons. If leakage, damage or defect is found, caliper disassembly may be required.

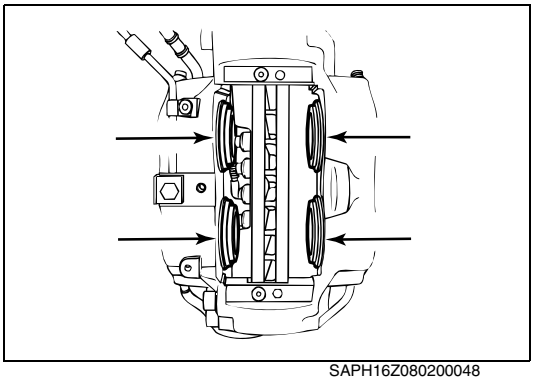

SAPH16Z080200048

(2) To install, reverse the removal process.

(3) Bleed the brake system and road test the vehicle.

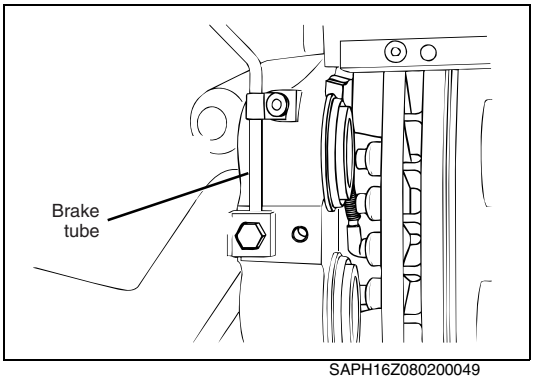


SAPH16Z080200049

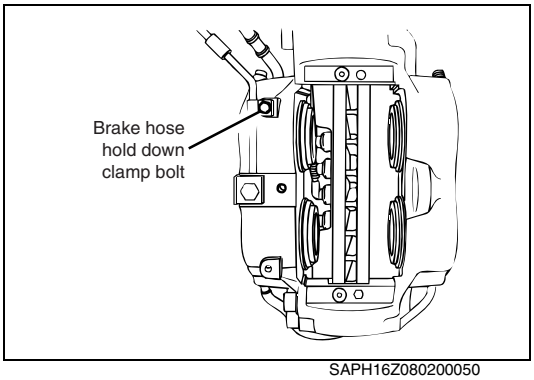


SAPH16Z080200050

**3. BRAKE PADS**

(1) Inspect the rotor for scoring, warping, cracks, bluing, heat spots or other damage or defects and minimum thickness. Repair or replace if necessary.

(2) Inspect the disc brake calipers for leakage, damage or defects to piston boots, seals or pistons. Replace or repair the parts as required.

(3) Clean and inspect the lining rail covers. If they are worn, they must be replaced.

**NOTICE**

**The inboard and outboard brake pads are identical, except when they are equipped with a mechanical wear sensor.**

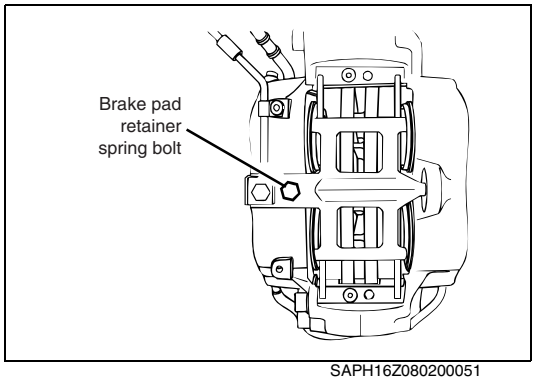


SAPH16Z080200051

(4) Install the brake pads. Ensure that the friction surface is against the rotor. Install the pad retainer spring and tighten the bolt to 30 lb-ft (40 N·m) of torque.

**NOTICE**

**Brake pad clearance adjustment is automatic.**

(5) Fill the master cylinder reservoir with new, clean, high-performance DOT 3 brake fluid or equivalent. Make several brake applications to move the brake pistons and linings out into contact with the brake rotors.

(6) Recheck master cylinder reservoir and top off as necessary to manufacturer's recommended level.

(7) Bleed the brake system.

(8) Install the tire and wheel assembly according to the manufacturer's instructions.

(9) Lower the vehicle and road test for correct operation.

**4. ASSEMBLE THE SUPPORT**

(1) Install the support mounting bolts. Tighten the bolts to the specified torque. Refer to Section 8.

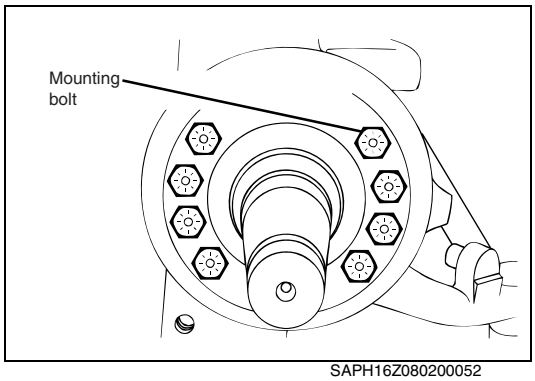


SAPH16Z080200052

(2) Install the ABS sensor. Tighten the bolt to 8 lb-ft (11 N·m).

(3) Install the hub and rotor assembly according to vehicle manufacturer's recommended service procedure.

(4) Install the splash shield, if equipped.

(5) Install the caliper as described in Caliper in this section.

## INSPECT PARTS

**⚠ WARNING**
**To prevent serious eye injury, always wear safe eye protection when you perform vehicle maintenance or service.**

**1. CALIPER**
(1) Clean the area around the brake hose. Use brake parts cleaner.
(2) Inspect the heat shields (previous style only) for wear and damage. Replace worn or damaged shields.
(3) Inspect the caliper lining spacers for wear and damage. Replace worn or damaged spacers.
(4) Inspect the housing for cracks or damage.
Replace a cracked or damaged housing.

**⚠ CAUTION**
**The OUTSIDE diameter of the piston is the caliper's primary sealing surface and is manufactured to very close tolerances. Replace a piston if the OUTSIDE diameter is damaged.**
**Do not refinish or use abrasives, including an emery cloth, on the piston. Damage to components can result.**

(5) Inspect the OUTSIDE diameter of the pistons for scoring, nicks, corrosion, wear and damage.

- **If any of these conditions are evident:**
Replace the pistons. Do not refinish or use abrasives.

(6) Inspect the caliper bore for scoring, nicks, corrosion, wear and damage.

- **If any of these conditions are evident:**
Replace the caliper.

**⚠ CAUTION**
**Use a crocus cloth to remove minor stains and corrosion from the caliper bore. Do not use abrasives, including an emery cloth. If you cannot remove minor stains and corrosion, replace the caliper bore to avoid damage to components.**

(7) Inspect the caliper bore for minor stains and corrosion.

- **If these conditions are evident:** Use a crocus cloth to remove stains or corrosion. Clean the caliper bore after using a crocus cloth. Do not use abrasives, including an emery cloth.
- **If you cannot remove stains and corrosion from the caliper bore:** Replace the caliper.

**2. CALIPER MOUNTING PLATE**
(1) Inspect caliper mounting plate area for rust, corrosion. Replace a damaged or worn mounting plate.
(2) Use a wire brush to clean the caliper mounting area.
(3) Inspect the mounting plate for cracks or elongated bolt holes.

- **If these conditions are evident:** Replace the mounting plate.

**3. BRAKE SYSTEM BLEEDING PROCEDURE**
Refer to manufacturer's service information for ABS bleeding instructions.
(1) Check the master cylinder reservoir and fill, if necessary, with DOT 3 or DOT 4 brake fluid.
(2) Bleed brakes in the following order: right rear, left rear, right front and left front.
(3) Each four-piston caliper is equipped with two bleeder screws. Loosen the inner bleeder screw (which is always on the top) and purge the air. Tighten it loosely.

(4) Open the outer bleeder screw and purge the air and tighten the bleeder screw to 9-12 lb-ft (12.2-16.3 N·m).
(5) Now again open the inner bleeder screw and purge the air and tighten the bleeder screw to 9-12 lb-ft (12.2-16.3 N·m).
(6) Repeat this procedure for all other brakes in the sequence specified in step 2.
(7) Test brakes prior to returning vehicle to service. A firm pedal should be felt during brake application.

# SERVICE BRAKE (FULL AIR BRAKE)

BR02-002

**AIR DRYER AND RESERVOIR SYSTEM (MODEL: BENDIX AD-IS)..... BR02-2**
DESCRIPTION ..... BR02-2
AD-IS® AIR DRYER RESERVOIR SYSTEM TROUBLESHOOTING CHART..... BR02-13

**CHECK VALVE..... BR02-17**
DATA AND SPECIFICATIONS ..... BR02-17
DESCRIPTION ..... BR02-17
INSPECTION AND REPAIR ..... BR02-18

**BRAKE PEDAL..... BR02-20**
OVERHAUL ..... BR02-20

**BRAKE VALVE..... BR02-23**
DATA AND SPECIFICATIONS ..... BR02-23
DESCRIPTION ..... BR02-23
COMPONENT LOCATOR..... BR02-24
INSPECTION AND REPAIR ..... BR02-25

**RELAY VALVE..... BR02-29**
DATA AND SPECIFICATIONS ..... BR02-29
DESCRIPTION ..... BR02-29
INSPECTION AND REPAIR ..... BR02-29

**SPRING BRAKE MODULATING VALVE ..... BR02-33**
DESCRIPTION ..... BR02-33
COMPONENT LOCATOR..... BR02-34
INSPECTION AND REPAIR ..... BR02-35

**SPRING BRAKE CONTROL VALVE ..... BR02-37**
DESCRIPTION ..... BR02-37
COMPONENT LOCATOR..... BR02-38
INSPECTION AND REPAIR ..... BR02-39

**BRAKE CHAMBER (FRONT)..... BR02-42**
DATA AND SPECIFICATIONS ..... BR02-42
DESCRIPTION ..... BR02-42
COMPONENT LOCATOR..... BR02-43
OVERHAUL ..... BR02-43

**BRAKE CHAMBER (REAR) ..... BR02-45**
DATA AND SPECIFICATIONS..... BR02-45
DESCRIPTION..... BR02-46
COMPONENT LOCATOR ..... BR02-47
INSPECTION AND REPAIR..... BR02-48

**PROTECTION VALVE ..... BR02-59**
DATA AND SPECIFICATIONS..... BR02-59
DESCRIPTION..... BR02-59
INSPECTION..... BR02-60

**WHEEL BRAKE ..... BR02-62**
DATA AND SPECIFICATIONS..... BR02-62
DESCRIPTION..... BR02-63
COMPONENT LOCATOR ..... BR02-64
OVERHAUL ..... BR02-66
INSPECTION AND REPAIR..... BR02-83

**AUTOMATIC SLACK ADJUSTER..... BR02-85**
DESCRIPTION..... BR02-85
DIAGNOSTICS..... BR02-86
COMPONENT LOCATOR ..... BR02-87
OVERHAUL ..... BR02-89
INSTALLING THE SLACK ADJUSTER ONTO THE CAMSHAFT ..... BR02-97
CHECK & ADJUSTMENT ..... BR02-99

# AIR DRYER AND RESERVOIR SYSTEM (MODEL: BENDIX AD-IS)

## DESCRIPTION

EN06Z0802C100001

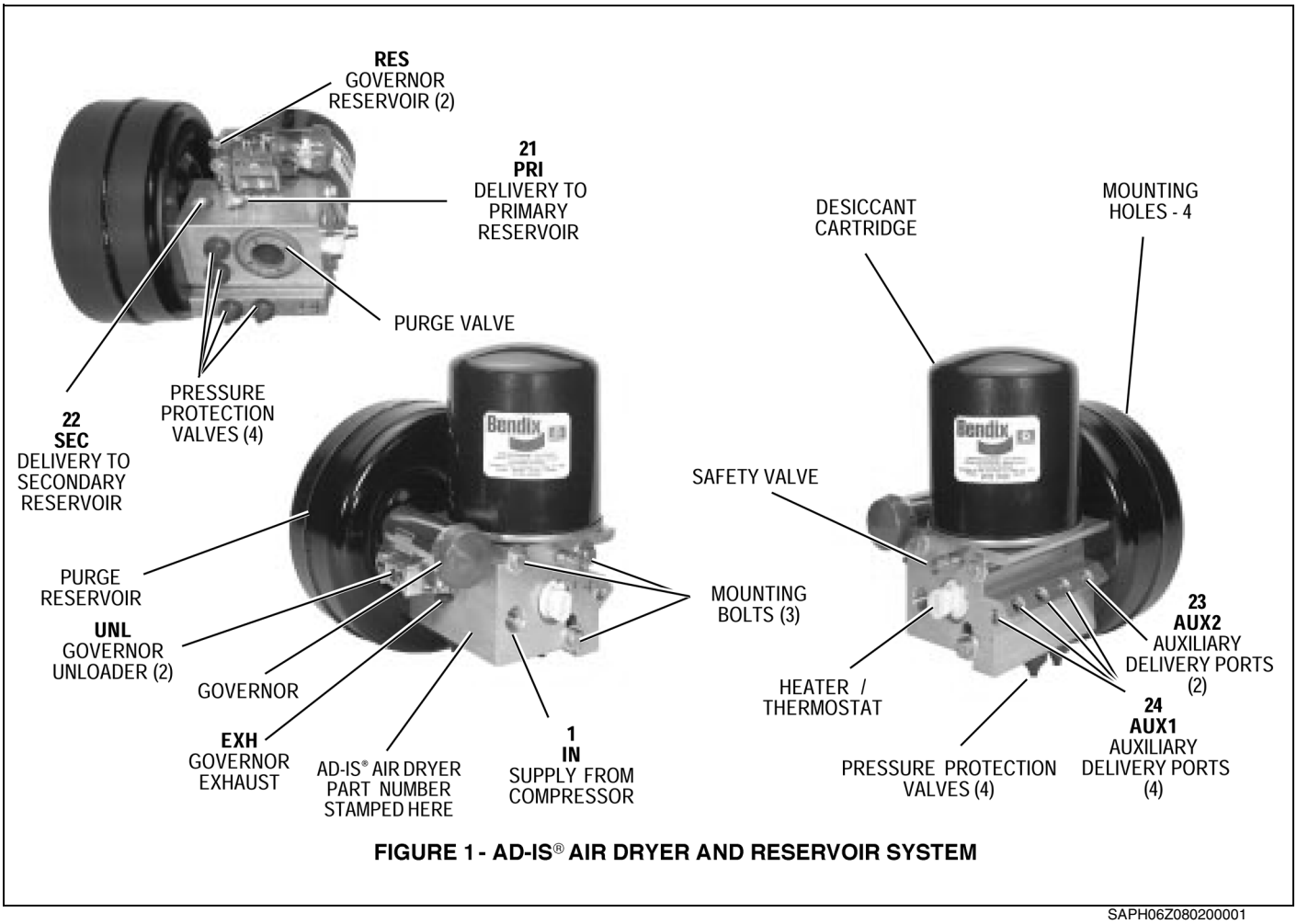


**FIGURE 1 - AD-IS® AIR DRYER AND RESERVOIR SYSTEM**

SAPH06Z080200001

**TABLE 1 - PORT DESIGNATIONS**

| Air Connection Port ID | Function/Connection | QTY |
|---|---|---|
| 1 IN | Inlet Port (air in). | 1 |
| 21 PRI | Delivery Port out (to Primary reservoir) | 1 |
| 22 SEC | Delivery Port out (to Secondary reservoir) | 1 |
| 24 AUX 1 | Auxiliary Delivery Port (air out). | 4 |
| 23 AUX 2 | Auxiliary Delivery Port (air out). | 1 |
| UNL | Unloader Control Air (D-2A™ Governor) | 2 |
| RES | Common Reservoir Pressure (D-2A™ Governor) | 2 |
| EXH | Governor Exhaust. | 1 |

The function of the Integrated Solution Air Dryer (AD-IS®) and Reservoir System is to provide heavy vehicles with an integrated vehicle air dryer, purge reservoir, governor and a number of the charging valve components in a module. These have been designed as an integrated air supply system.

The AD-IS® air dryer and reservoir system collects and removes air system contaminants in solid, liquid and vapor form before they enter the brake system. It provides clean, dry air to the components of the brake system which increases the life of the system and reduces maintenance costs. The necessity for daily manual draining of the reservoirs is eliminated.

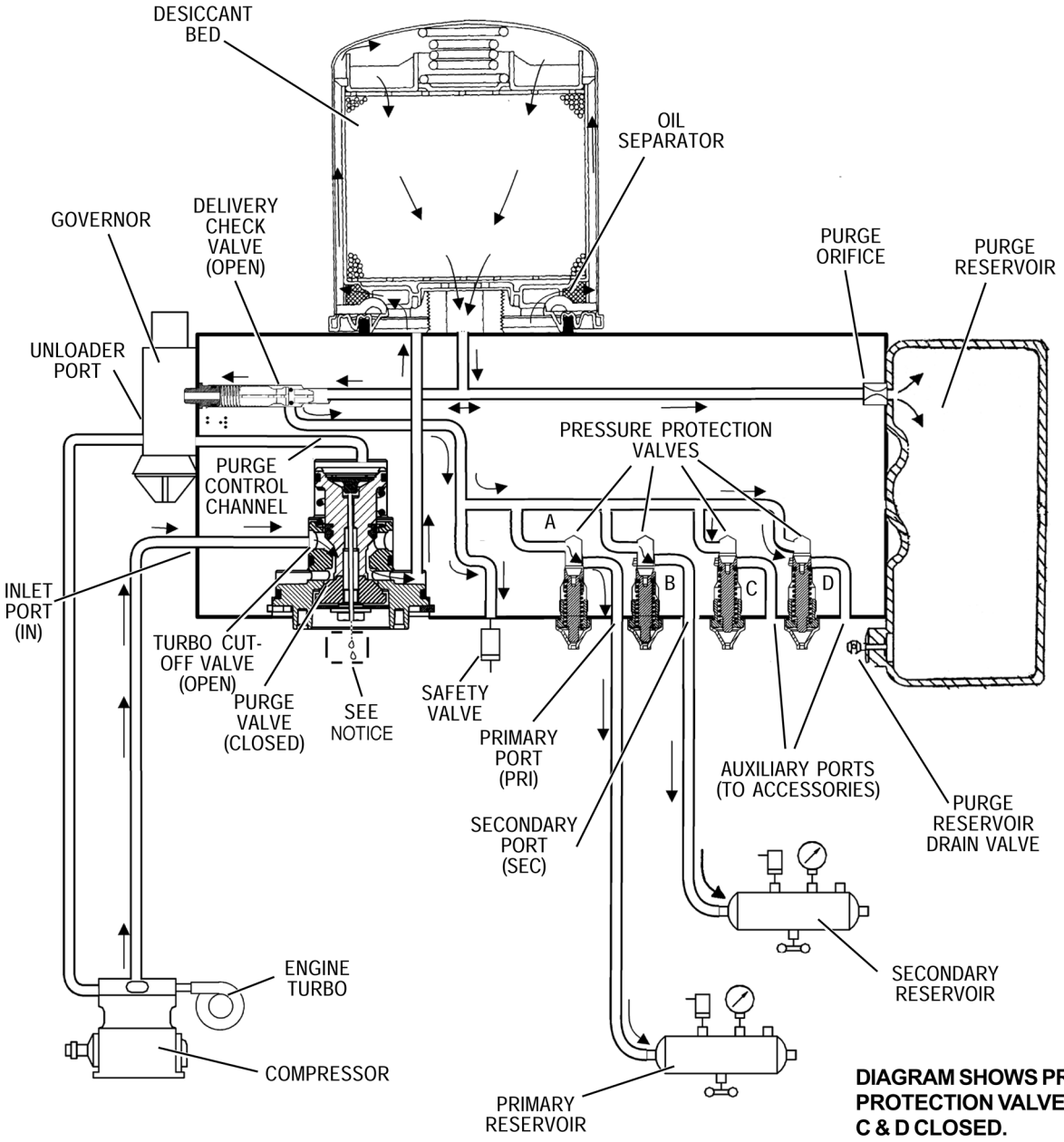


**FIGURE 2 - AD-IS® AIR DRYER AND RESERVOIR SYSTEM CHARGE CYCLE**

SAPH06Z080200002

The function of the pressure protection valves is to protect each reservoir from a pressure loss in the other reservoir or a pressure loss in an air accessory. Each of the pressure protection valves in the AD-IS® air dryer and reservoir system may have different pressure settings, but these are factory set and must not be changed or adjusted.

The air dryer and reservoir system consists of a "spin on" desiccant cartridge secured to a base assembly. The base assembly contains a delivery check valve assembly, safety valve, heater and thermostat assembly, pressure protection valves, threaded air connections and the purge valve assembly.

The removable purge valve assembly incorporates the purge valve mechanism and a turbocharger cut-off feature that is designed to prevent loss of engine "turbo" boost pressure during the purge cycle of the AD-IS® air dryer and reservoir system. For ease of maintenance, all replaceable assemblies can be serviced without removal of the air dryer and reservoir system from its mounting on the vehicle. Refer to Preventive Maintenance section.

**NOTICE**

**The AD-IS® air dryer and reservoir system purge piston has a purge control channel drain. This allows any condensation in this area to flow past a diaphragm in the top of the purge piston and out through a channel in the middle of the central bolt of the purge assembly to be drained. During the purge cycle this drain is closed.**

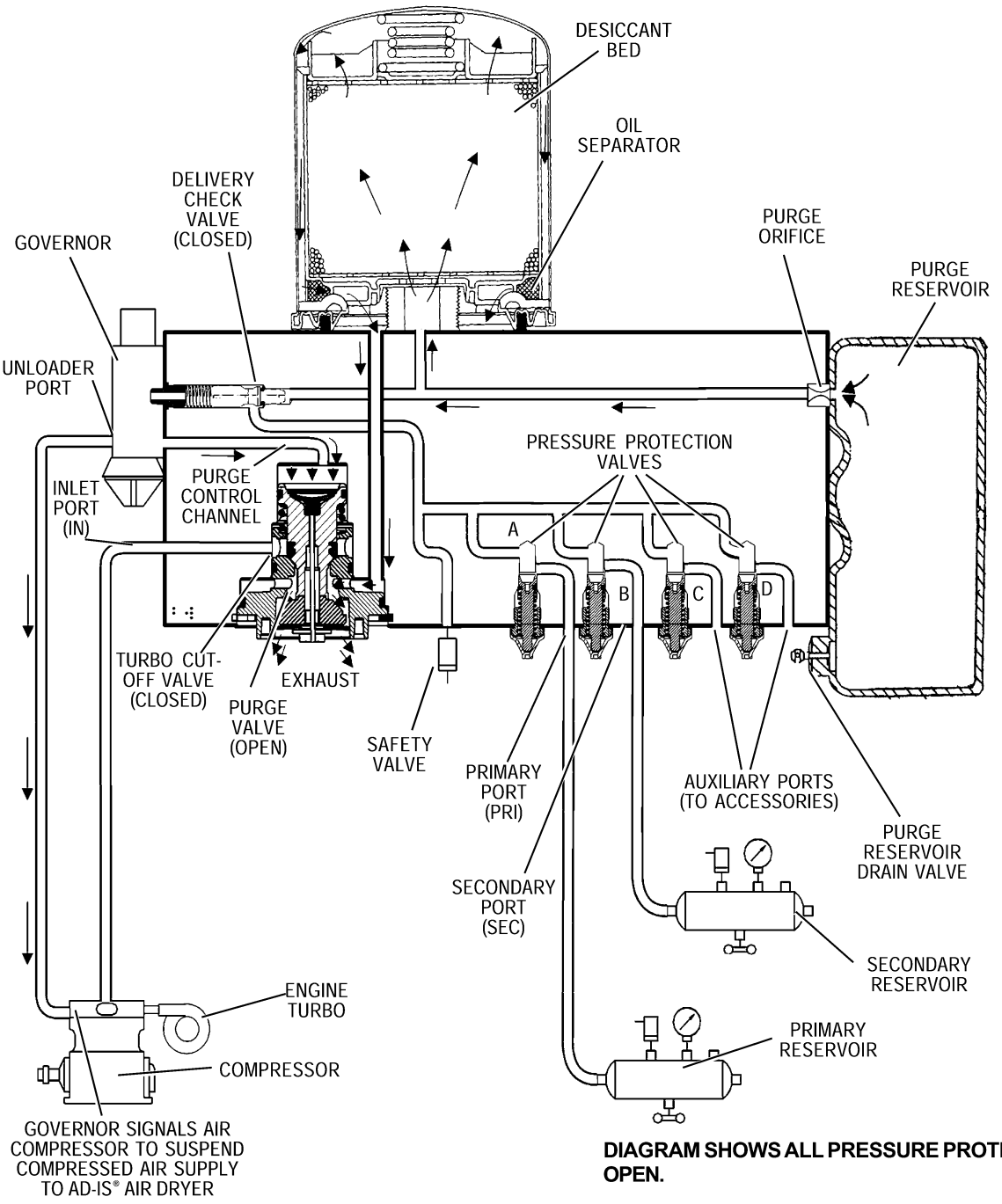


**FIGURE 3 - AD-IS® AIR DRYER AND RESERVOIR SYSTEM PURGE CYCLE**

SAPH06Z080200003

## AD-IS® AIR DRYER AND RESERVOIR SYSTEM OPERATION: GENERAL (Refer to Figure 2)

The AD-IS® air dryer and reservoir system is designed to receive compressed air from the vehicle air compressor, clean and dry the air, deliver air to the vehicle's primary reservoir, secondary reservoir and accessories, and control the compressor/dryer charge cycle.

### AIR DRYER AND RESERVOIR SYSTEM OPERATION: GENERAL

The AD-IS® air dryer and reservoir system alternates between two operational modes or "cycles" during operation: the Charge Cycle and the Purge Cycle. The following descriptions are separated into these "cycles" of operation.

**CHARGE CYCLE (Refer to Figure 2)**

When the compressor is loaded (compressing air) compressed air flows through the compressor discharge line to the inlet (1/IN) port of the air dryer body. The compressed air often includes contaminates such as oil, oil vapor, water and water vapor.

Traveling through the discharge line and into the air dryer, the temperature of the compressed air falls, causing some of the contaminants to condense and drop to the bottom of the air dryer and reservoir system purge valve assembly, ready to be expelled at the next purge cycle. The air then flows into the desiccant cartridge, where it flows through an oil separator which removes liquid oil and solid contaminants.

Air then flows into the desiccant drying bed and becomes progressively drier as water vapor adheres to the desiccant material in a process known as "ADSORPTION."

Dry air exits the desiccant cartridge through the center of the base assembly. The air then flows to the delivery check valve and also through an orifice into the purge reservoir. The delivery check valve opens, supplying air to the pressure protection valves (A) through (D) simultaneously, the safety valve, and also to the reservoir port of the attached governor. The purge reservoir fills, storing air that will be used to reactivate the desiccant during the purge cycle. This air is available to supply downstream components during the charge mode.

When the air pressure reaches approximately 106 psi, the four pressure protection valves will open and air will be supplied to the primary reservoir, secondary reservoir and accessories. If the pressure protection valves are preset to different values the valves will open in order of lowest setting to highest setting when charging a flat system.

The air dryer and reservoir system will remain in the charge cycle until the air brake system pressure builds to the governor cut-out setting of approximately 130 p.s.i.

**PURGE CYCLE (Refer to Figure 3.)**

When air brake system pressure reaches the cut-out setting of the governor, the governor unloads the compressor and the purge cycle of the air dryer and reservoir system begins.

The governor unloads the compressor by allowing air pressure to fill the line leading to the compressor unloader mechanism - causing the delivery of compressed air to the AD-IS® air dryer and reservoir system to be suspended.

Similarly, the governor also supplies air pressure to the AD-IS® air dryer and reservoir system purge control channel. The AD-IS® air dryer and reservoir system purge piston moves down in response to this air pressure, causing the purge valve to open to the atmosphere and the turbo cut-off valve to close off the supply of air from the compressor (this will be further discussed in the Turbo Cut-off Feature section). Water and contaminants which have collected in the purge valve base are expelled immediately when the purge valve opens. Also, air which was flowing through the desiccant cartridge changes direction and begins to flow toward the open purge valve. Oil and solid contaminants collected by the oil separator are removed by air flowing from the purge reservoir through the desiccant drying bed to the open purge valve.

The initial purge and desiccant cartridge decompression lasts only a few seconds and is evidenced by an audible burst of air at the AD-IS® air dryer and reservoir system exhaust.

The actual reactivation of the desiccant drying bed begins as dry air from the purge reservoir flows through the purge orifice into the desiccant bed. Pressurized air from the purge reservoir expands after passing through the purge orifice; its pressure is lowered and its volume increased. The flow of dry air through the drying bed reactivates the desiccant material by removing the water vapor adhering to it. Approximately 30 seconds are required for the entire contents of the purge reservoir of a standard AD-IS® air dryer and reservoir system to flow through the desiccant drying bed.

The delivery check valve assembly prevents air pressure in the brake system from returning to the air dryer and reservoir system during the purge cycle. After the purge cycle is complete, the air dryer and reservoir system is ready for the next charge cycle to begin.

**TURBO CUT-OFF FEATURE (Refer to Figure 3.)**

The primary function of the turbo cut-off valve is to prevent loss of engine turbocharger air pressure through the AD-IS® air dryer and reservoir system when the dryer is in the unloaded mode.

At the onset of the purge cycle, the downward travel of the purge piston is stopped when the turbo cut-off valve (tapered portion of purge piston) contacts its mating metal seat in the purge valve housing. With the turbo cut-off valve seated (closed position), air in the compressor discharge line and AD-IS® air dryer and reservoir system inlet port cannot enter the air dryer and reservoir system. In this manner the turbo cut-off effectively maintains turbo charger boost pressure to the engine.

## PREVENTIVE MAINTENANCE

**Important:** Review the warranty policy before performing any intrusive maintenance procedures. An extended warranty may be voided if intrusive maintenance is performed during this period. Purge valve maintenance is permissible during the warranty period only when using a genuine Bendix purge valve kit.

Because no two vehicles operate under identical conditions, maintenance and maintenance intervals will vary. Experience is a valuable guide in determining the best maintenance interval for any one particular operation.

**Every 900 operating hours, or 25,000 miles or three (3) months:**

1. Check for moisture in the air brake system by opening reservoir drain valves and checking for presence of water. If moisture is present, the desiccant cartridge may require replacement; however, the following conditions can also cause water accumulation and should be considered before replacing the desiccant:

a. An outside air source has been used to charge the system. This air did not pass through the drying bed.

b. Air usage is exceptionally high and not normal for a highway vehicle.
This may be due to accessory air demands or some unusual air requirement that does not allow the compressor to load and unload (compressing and non-compressing cycle) in a normal fashion. Check for high air system leakage. If the vehicle vocation has changed it may be necessary to upgrade the compressor size. Refer to Bendix Specification BW-100-A, Appendix D to determine if any changes are necessary.

c. Location of the air dryer and reservoir system is too close to the air compressor. Refer to Bendix Specification BW-100-A, Appendix B for discharge line lengths.

d. In areas where more than a 30 degree range of temperature occurs in one day, small amounts of water can temporarily accumulate in the air brake system due to condensation. Under these conditions, the presence of small amounts of moisture is normal.

**NOTICE**

- **A small amount of oil in the system is normal and should not be considered as a reason to replace the desiccant cartridge. Some oil at the dryer exhaust is normal.**
- **When draining air tanks, if moisture is present replace desiccant.**

2. Visually check for physical damage such as chaffed or broken air and electrical lines and broken or missing parts.
3. Check the AD-IS® air dryer and purge reservoir bolts for tightness. See Figure 1. Re-torque the three air dryer bolts to 360-420 inch pounds and the four purge reservoir bolts to 300-360 inch pounds.
4. Perform the Operation & Leakage Tests listed in this publication.

**⚠ WARNING**

**This air dryer and reservoir system is intended to remove moisture and other contaminants normally found in the air brake system. Do not inject alcohol, anti-freeze, or other de-icing substances into or upstream of the air dryer and reservoir system. Alcohol is removed by the dryer, but reduces the effectiveness of the device to dry air. Use of these or other substances can damage the air dryer and reservoir system and may void the warranty.**

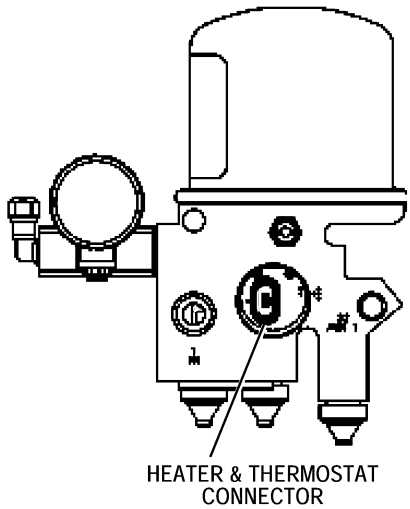


**FIGURE 4 - AD-IS® AIR DRYER AND RESERVOIR SYSTEM
HEATER AND THERMOSTAT CONNECTOR**

SAPH06Z080200004

## OPERATION & LEAKAGE TESTS (ALSO SEE VIDEO BW2327)

1. Check all lines and fittings leading to and from the air dryer and reservoir system for leakage and integrity. Repair any leaks found.
2. Build up system pressure to governor cut-out and note that the AD-IS® air dryer and reservoir system purges with an audible escape of air. Watch the system pressure and note the pressure fall-off for a ten minute period. If pressure drop exceeds, for a single vehicle - 1 psi/minute from either service reservoir; or for tractor trailer - 3 psi/minute from either service reservoir, inspect the vehicle air systems for sources of leakage and repair them. Refer to section entitled Troubleshooting, Symptoms 1 and 4.
3. **Caution: Be sure to wear safety glasses in case of a purge blast.** Check for excessive leakage around the purge valve with the compressor in the loaded mode (compressing air). Apply a soap solution to the purge valve exhaust port and observe that leakage does not exceed a 1" bubble in 1 second. If the leakage exceeds the maximum specified, refer to section entitled Troubleshooting, Symptom 4.
4. Build up system pressure to governor cut-out and note that the AD-IS® air dryer and reservoir system purges with an audible burst of air, followed immediately by approximately 30 seconds of air flowing out of the purge valve. "Fan" the service brakes to reduce system air pressure to governor cut-in. Note that the system once again builds to full pressure and is followed by an AD-IS® air dryer and reservoir system purge. If system does not follow this pattern, refer to section entitled Troubleshooting, Symptoms 5 and 6.
5. Check the operation of the end cover heater and thermostat assembly during cold weather operation as follows:

a. Electric Power to the Dryer
With the ignition or engine kill switch in the RUN position, check for voltage to the heater and thermostat assembly using a voltmeter or testlight. Unplug the electrical connector at the air dryer and reservoir system and place the test leads on each of the connections of the female connector on the vehicle power lead. If there is no voltage, look for a blown fuse, broken wires, or corrosion in the vehicle wiring harness. Check to see if a good ground path exists.

b. Thermostat and Heater Operation

**NOTICE**
**These tests are not possible except in cold weather operation.**

Turn off the ignition switch and cool the thermostat and heater assembly to below 40 degrees Fahrenheit. Using an ohmmeter, check the resistance between the electrical pins in the air dryer and reservoir system connector half. The resistance should be 1.5 to 3.0 ohms for the 12 volt heater assembly and 6.0 to 9.0 ohms for the 24 volt heater assembly. Warm the thermostat and heater assembly to approximately 90 degrees Fahrenheit and again check the resistance. The resistance should exceed 1000 ohms. If the resistance values obtained are within the stated limits, the thermostat and heater assembly is operating properly. If the resistance values obtained are outside the stated limits, replace the heater and thermostat assembly.

6. Pressure Protection Valves. Observe the pressure gauges of the vehicle as system pressure builds from zero. The primary or secondary gauge should rise until it reaches approximately 106 p.s.i. (6 p.s.i.), then level off (or a momentary slight fall) as the next pressure protection valve opens supplying its reservoir. When that pressure gauge passes through approximately 106 p.s.i. (6 p.s.i.) there should be an associated leveling off (or momentary slight fall) of pressure as the third and fourth pressure protection valves open. Then the primary and secondary gauges should increase together until they reach their full pressure of approximately 130 psi (5 psi).
If the AD-IS® air dryer and reservoir system does not perform within the pressure ranges as described above, recheck using gauges known to be accurate. If the readings remain outside of the ranges outlined above, replace the AD-IS® air dryer and reservoir system. **NOTE:** There are no kits available for the servicing of the pressure protection valves. **WARNING: Do not attempt to adjust or service the pressure protection valves - incorrect pressure protection valve settings can result in automatic application of the vehicle spring brakes without prior warning in the event one of the supply circuits experiences rapid pressure loss.**

## REBUILDING THE AD-IS® AIR DRYER AND RESERVOIR SYSTEM

GENERAL SAFETY GUIDELINES

**⚠ WARNING**
**PLEASE READ AND FOLLOW THESE INSTRUCTIONS TO AVOID PERSONAL INJURY OR DEATH:**

When working on or around a vehicle, the following general precautions should be observed at all times.

1. Park the vehicle on a level surface, apply the parking brakes, and always block the wheels. Always wear safety glasses.
2. Stop the engine and remove ignition key when working under or around the vehicle. When working in the engine compartment, the engine should be shut off and the ignition key should be removed. Where circumstances require that the engine be in operation, EXTREME CAUTION should be used to prevent personal injury resulting from contact with moving, rotating, leaking, heated or electrically charged components.

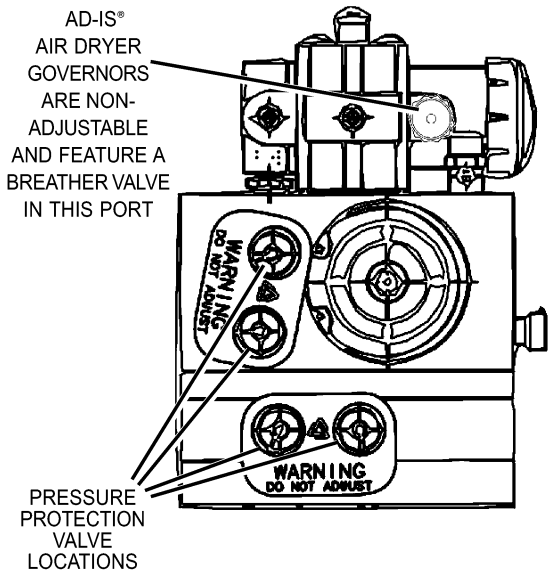


**FIGURE 5 - PRESSURE PROTECTION VALVE LOCATIONS**

SAPH06Z080200005

**⚠ WARNING**
**DO NOT ATTEMPT TO ADJUST OR SERVICE THE PRESSURE PROTECTION VALVES. INCORRECT PRESSURE PROTECTION VALVE SETTINGS CAN RESULT IN AUTOMATIC APPLICATION OF VEHICLE SPRING BRAKES WITHOUT PRIOR WARNING.**

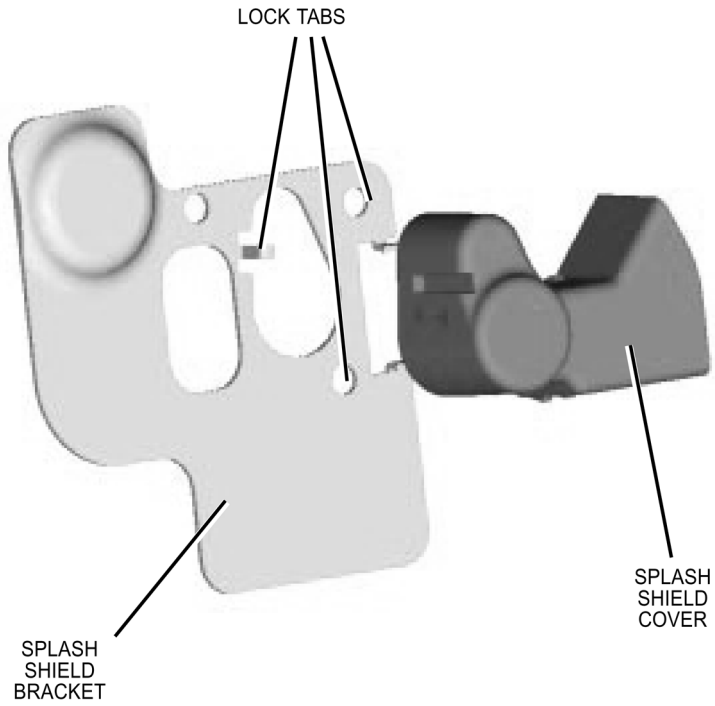


**FIGURE 6 - SPLASH SHIELD BRACKET AND COVER - (EXPLODED VIEW)**

SAPH06Z080200006

3. Do not attempt to install, remove, disassemble or assemble a component until you have read and thoroughly understand the recommended procedures. Use only the proper tools and observe all precautions pertaining to use of those tools.
4. If the work is being performed on the vehicle's air brake system, or any auxiliary pressurized air systems, make certain to drain the air pressure from all reservoirs before beginning ANY work on the vehicle. If the vehicle is equipped with an AD-IS® air dryer system or a dryer reservoir module, be sure to drain the purge reservoir.
5. Following the vehicle manufacturer's recommended procedures, deactivate the electrical system in a manner that safely removes all electrical power from the vehicle.
6. Never exceed manufacturer's recommended pressures.
7. Never connect or disconnect a hose or line containing pressure; it may whip. Never remove a component or plug unless you are certain all system pressure has been depleted.
8. Use only genuine Bendix® replacement parts, components and kits. Replacement hardware, tubing, hose, fittings, etc. must be of equivalent size, type and strength as original equipment and be designed specifically for such applications and systems.
9. Components with stripped threads or damaged parts should be replaced rather than repaired. Do not attempt repairs requiring machining or welding unless specifically stated and approved by the vehicle and component manufacturer.
10. Prior to returning the vehicle to service, make certain all components and systems are restored to their proper operating condition.
11. For vehicles with Antilock Traction Control (ATC), the ATC function must be disabled (ATC indicator light should be ON) prior to performing any vehicle maintenance where one or more wheels on a drive axle are lifted off the ground and moving.

## GENERAL

When rebuilding or replacing components of the air dryer and reservoir system use only genuine Bendix parts. For ease in servicing, the AD-IS® air dryer and reservoir system has been designed so that any of the following maintenance kits can be installed without removing the air dryer and reservoir system from the vehicle.

**CAUTION: Always depressurize the air dryer and reservoir system purge reservoir, and all other reservoirs on the vehicle to 0 p.s.i. before servicing the air dryer and reservoir system. If, after completing the routine operation and leakage tests, it has been determined that one or more components of the air dryer and reservoir system requires replacement or maintenance, refer to the following list to find the appropriate kit(s).**

## MAINTENANCE KITS AVAILABLE:

- Service New Desiccant Cartridge Kit - Part Number 5008414: This kit contains the parts necessary to change the desiccant cartridge only.
- Delivery Check Valve Maintenance Kit - Part Number 5004052: This kit contains the parts necessary to replace the delivery check valve.
- Purge Valve Maintenance Kit - Part Number 5018313: This kit contains the parts necessary to replace and relubricate the purge valve sealing rings.
- Governor/Delivery Check Valve Kit - Part Number 5004049: This kit contains the parts necessary to replace both the governor and delivery check valve.
- 12 volt or 24 volt Heater and Thermostat Kit - Part Numbers 109495 & 109496: Contains a replacement heater and thermostat assembly and related components required for replacement.
- Purge Valve Housing Rebuild Kit - Part Number 5003547: This kit contains the parts necessary to rebuild the purge valve sub-assembly.
- Service New Purge Valve Housing Assembly - Part Number 800404: Contains a service new assembly and related components to change the purge valve subassembly.
- Pressure Protection Valve Boot Replacement- Part Number 5005163.
- AD-IS® Air Dryer Replacement: Replaces the complete air dryer assembly. Includes air dryer assembly and governor.
- AD-IS® Air Dryer Splash Shield Replacement Kit - Part Number 5006698.
- Purge Reservoir Drain Valve: Replaces the drain valve on the purge reservoir.

## SEE THE AD-IS® AIR DRYER CATALOG PAGE (STARTING ON PAGE 08-A-24) FOR A FULL LIST OF MAINTENANCE KITS AVAILABLE.

**NOTICE**

**Kits are not available for the servicing of the pressure protection valves (See Figure 5). Do not attempt to adjust or service the pressure protection valves - these are not service items.**

## TESTING THE AD-IS® AIR DRYER AND RESERVOIR SYSTEM

Before placing the vehicle in service, perform the following tests:

1. Close all reservoir drain valves.
2. Build up system pressure to governor cut-out and note that the AD-IS® air dryer and reservoir system purges with an audible burst of air, followed immediately by approximately 30 seconds of air flowing out of the purge valve.
3. "Fan" the service brakes to reduce system air pressure to governor cut-in. Note that the system once again builds to full pressure and is followed by a purge at the AD-IS® air dryer and reservoir system exhaust.
4. It is recommended that the total air system be tested for leakage to assure that the AD-IS® air dryer and reservoir system will not cycle excessively.
   See Bendix publication BW5057 "Air Brake Handbook."

## BRAKING SYSTEM PROTECTION

The AD-IS® air dryer and reservoir system allows the system to maintain one brake circuit up to about 100 psi even after a pressure loss in the other brake circuit. This allows a vehicle to be moved (in an emergency), but with reduced braking capacity. Compare this to a conventional system where a loss of pressure in one service tank leaves the vehicle with a limited number of reduced braking capacity applications before the parking brakes automatically apply and stay on.

## ROADSIDE INSPECTION

In the event of a roadside inspection the system behavior will be as follows: When the system is charged to governor cut-out, and then one reservoir drain valve is opened, initially both reservoir gauges will fall, however, the AD-IS® air dryer and reservoir system primary and secondary pressure protection valves will close at pressures above 70 psi, protecting the remaining brake circuit from further loss of pressure.

## TEMPORARY AIR DRYER AND RESERVOIR SYSTEM BYPASS

To temporarily bypass the air dryer, the following procedure needs to be followed:
Follow the Maintenance Precautions outlined elsewhere in this document.
Make sure that all residual pressure has been released and the air dryer purge reservoir has been drained to 0 p.s.i., then remove the air supply line from the compressor to the inlet port (1/IN). Remove the safety valve from the AD-IS® air dryer and reservoir system body (see Figure 1 for location). Note that a short puff of trapped air may vent from the safety valve port when the valve is being removed. Install a T-fitting into the port. Using any adapters necessary, reinstall the safety valve in one of the branches of the T-fitting. Using any adapters necessary, install the air supply line into the remaining T-fitting port. After testing the T-fitting for any air leakage, by using a soap solution after charging to system cut-out pressure (a 1" bubble in 10 seconds is acceptable), the vehicle may be returned to temporary service.

**NOTICE**

**This is a temporary bypass of the air dryer, and full repair of the unit must be carried out at the earliest opportunity.**

With the air dryer and reservoir system removed from the system, contaminants will be entering the air system: reservoirs will need to be manually drained daily until the repairs are completed. At end of each working day, park vehicle and slowly drain pressure through the drain valves - leave open to the atmosphere, for several hours if possible. When repairs are carried out, be sure to check that all reservoirs (including the air dryer purge reservoir) are emptied of all contaminants.
If after bypassing the air dryer and reservoir system the system pressure still does not build, use the following procedure to remove, clean and reinstall the delivery check valve.

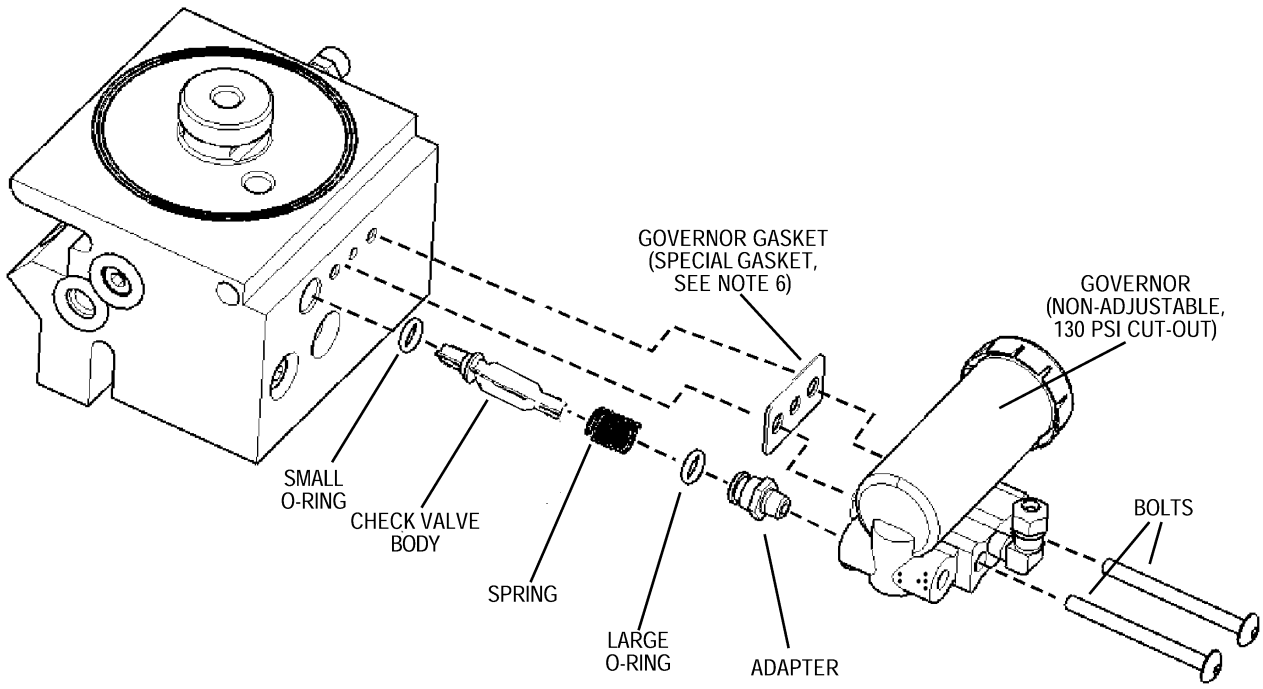


**FIGURE 7 - AD-IS® AIR DRYER AND RESERVOIR SYSTEM DELIVERY CHECK VALVE**

SAPH06Z080200007

**DELIVERY CHECK VALVE CLEANING PROCEDURE**

(Note: This is only required if system pressure does not build after temporary bypass is completed.)
See Figure 7 throughout this procedure. Depressurize the air brake system following the general safety precautions outlined elsewhere in this document. Also, always depressurize the air dryer purge reservoir before servicing the air dryer.
This procedure does not require removal of the AD-IS® air dryer and reservoir system from the vehicle.

1. Remove the line from the governor and mark for easy reinstallation.
2. Remove the bolts attaching the governor to the AD-IS® air dryer and reservoir system and retain for reassembly.
3. Remove the governor from the air dryer. Be aware that a short puff of trapped air may vent when the governor is removed. Retain the governor gasket for reassembly if a new governor gasket is not available. Remove and retain the O-ringO-ring from the adapter.
4. The spring/delivery check valve can now be removed.
5. Remove and retain the O-ring from check valve body.

**CLEANING & INSPECTION**

1. Use a suitable solvent to clean all metal parts, and use a cotton swab to clean the bore (Note: Do not use abrasives or tools to clean the bore: any scratches caused may necessitate replacing the AD-IS® air dryer and reservoir system.) Superficial external corrosion and/or pitting is acceptable.
2. Clean the O-rings with a clean dry cloth. Do not use solvents.
3. Inspect for physical damage to the bore and the check valve seat. If the bore is damaged (by scratches etc. that would prevent delivery check valve from seating), replace the AD-IS® air dryer.
4. Inspect the delivery check valve, O-rings, etc. for wear or damage. Replace if necessary using the check valve replacement kit available at authorized Bendix parts outlets.
5. Inspect all air line fittings for corrosion and replace as necessary.

**ASSEMBLY**

1. Lubricate the smaller O-ring and check valve body with Bendix supplied barium or silicon grease.
2. Install this O-ring on the check valve body by sliding the O-ring over the set of 4 tapered guide lands. The O-ring groove holds the O-ring in its correct location.
3. At the other end of the check valve body, the spring is installed over the set of 4 straight guide lands. When the spring has been pushed to the correct location, the check valve body is designed to hold the end of the spring in position - be sure that the spring is not loose before continuing with this installation.
4. Install the assembled check valve body/O-ring/spring in the delivery port so that the O-ring rests on its seat and the free end of the spring is visible.
5. Grease the adapter and the remaining larger O-ring and install it onto the fitting.
6. Position the Bendix supplied gasket, then insert the governor mounting bolts through the governor and tighten (to 125 in-lbs). **(Note: Do not replace with a standard compressor/governor gasket.)**
7. Reattach line to the governor.
8. Before placing vehicle back into service, check to see that the system pressure now builds to full operational pressure.

# AD-IS® AIR DRYER RESERVOIR SYSTEM TROUBLESHOOTING CHART

EN06Z0802F300001

| SYMPTOMS | CAUSE | REMEDY |
|---|---|---|
| 1. Dryer is constantly "cycling" or purging | A. Excessive system leakage | A. Test for excessive system leakage.<br>Allowable leakage observed at dash gauge:<br>Single vehicle - 1 psi/minute.<br>Tractor trailer - 3 psi/minute.<br>Using soap solution, test vehicle for leakage at fittings, drain valves and system valves. Repair or replace as necessary. |
| | B. Defective delivery check valve. | B. Build system pressure to governor cut-out. Wait 1 minute for completion of purge cycle. Using soap solution at exhaust of purge valve, leakage should not exceed a 1" bubble in less than 5 seconds. If a rapid loss of pressure is found, the following procedure will determine if the delivery check valve is malfunctioning:<br>Build system pressure to governor cut-out and allow a full minute for the normal dryer purge cycle to empty the purge reservoir. Switch off the engine and "fan" the brakes so that the system pressure reaches governor cut-in. The purge valve will return to its closed position. The purge reservoir has a drain valve which is opened by moving the center lever away from its closed position. Open the drain valve and wait 10 seconds to allow any residual purge pressure to be released. Release the lever, closing the drain valve. Carefully remove the air dryer cartridge using a strap wrench and then test for air leaking through the center of the threaded boss by applying a soap solution to the boss.<br>Replace the delivery check valve if there is excessive leakage (exceeding a 1" bubble in 5 seconds). Replace the seal on the air dryer cartridge before reinstalling. Be sure the drain valve on the purge reservoir is not leaking before restoring vehicle to service. |
| | C. Defective governor. | C. Check governor at both "cut-in" and "cut-out" position for (i) proper pressures and (ii) excessive leakage at fittings and exhaust. |
| | D. Compressor unloader mechanism leaking excessively. | D. Remove air strainer or fitting from compressor inlet cavity. With compressor unloaded, check for unloader piston leakage. Slight leakage is permissible. |

| SYMPTOMS | CAUSE | REMEDY |
|---|---|---|
| 2. Water in vehicle reservoirs. | A. Maximum air dryer inlet temperature is exceeded due to improper discharge line length. | A. Check for excessive carbon build up in compressor discharge line. Replace if required. Make certain that discharge line length is at least 6 ft. Increase discharge line length and/or diameter to reduce air dryer inlet temperature. |
| | B. Air system charged from outside air source (outside air not passing through air dryer). | B. If system must have outside air fill provision, outside air should pass through air dryer. |
| | C. Excessive air usage - Air dryer not compatible with vehicle air system requirement (Improper air dryer/ vehicle application). | C. Refer to Bendix Advanced Troubleshooting Guide for Air Brake Compressors (BW1971) for proper application of the AD-IS® air dryer and reservoir system. An extended purge model (AD-ISEP) is available for many higher air usage vehicles, such as city buses and construction vehicles.<br>If the vehicle is equipped with high air usage accessories such as trailer pump-off systems or central tire inflation, the air for these accessories must by-pass the dryer reservoir system. |
| | D. Desiccant requires replacement. | D. Replace desiccant cartridge assembly. |
| | E. Air by-passes desiccant cartridge assembly. | E. If vehicle uses Holset compressor, inspect feedback check valve for proper installation and operation. |
| | F. Air dryer not purging. | F. Refer to Symptom 6. |
| | G. Purge (air exhaust) time insufficient due to excessive system leakage. | G. Refer to Symptom 1. |
| 3. Safety valve on air dryer "popping off" or exhausting air. | A. Defective AD-IS® air dryer and reservoir system delivery check valve. | A. Test to determine if air is passing through check valve. Repair or replace. Refer to Symptom 1, Remedy B. |
| | B. Safety valve setting too low (<150 p.s.i.) | B. Replace safety valve. |
| | C. System pressure too high (>135 p.s.i.) | C. Test with accurate gauge. Replace governor if necessary. |
| | D. Excessive pressure pulsations from compressor. (Typical single cylinder type). | D. Increase volume in discharge line. This can be accomplished by adding a 90 cubic inch (or larger) reservoir between the compressor and the AD-IS® air dryer and reservoir system. |

| SYMPTOMS | CAUSE | REMEDY |
|---|---|---|
| 4. Constant exhaust of air at air dryer purge valve exhaust or unable to build system pressure. (Charge mode.) | A. Air dryer purge valve leaking excessively. | A. With compressor loaded, apply soap solution on purge valve exhaust, to test for excessive leakage. Repair or replace purge valve as necessary. Refer to Technical Bulletin TCH-008-040. |
| | B. Purge valve frozen open - faulty heater and thermostat, wiring, blown fuse. | B. Refer to paragraph 5 of Operation and Leakage Tests for heater and thermostat test. |
| | C. Defective AD-IS® air dryer delivery check valve. | C. Refer to Symptom 1, Remedy B. |
| | D. Leaking Turbo Cut-Off valve. | D. Repair or replace purge valve assembly. |
| | E. Defective governor. | E. Check governor at both "cut-in" and "cut-out" position for (i) proper pressures and (ii) excessive leakage at fittings and exhaust. |
| | F. Leaking purge valve control piston quad-ring. | F. Repair or replace purge valve assembly. |
| 5. Cannot build system air pressure. | A. Kinked or blocked (plugged) discharge line. | A. Check to determine if air passes through discharge line. Check for kinks, bends, excessive carbon deposits, or ice blockage. |
| | B. Excessive bends in discharge line (water collects and freezes). | B. Discharge line should be constantly sloping from compressor to air dryer with as few bends as possible. |
| | C. Pressure protection valve(s) in air dryer will not open. | C. Replace air dryer (pressure protection valves are not serviceable). |
| | D. Refer to Symptom 4. | D. Refer to Symptom 4, Remedy A. |
| | E. Refer to Symptom 7. | E. Refer to Symptom 7, Remedies A and B. |
| 6. Air dryer does not purge or exhaust air. | A. Faulty air dryer purge valve. | A. After determining air reaches purge valve control port by installing a T-fitting with a pressure gauge into the governor unloader port, repair purge valve if necessary. |
| | B. See Causes B, E, and F for Symptom #4. | B. Refer to Symptom 4, Remedies B, E, and F. Also refer to Symptom 1, Remedy B. |
| 7. Desiccant material being expelled from air dryer purge valve exhaust (may look like whitish liquid or paste or small beads.) | A. Faulty dryer cartridge. | A. Replace AD-IS® air dryer cartridge and/or AD-IS® air dryer. |
| | B. Excessive dryer vibration. | B. Check the AD-IS® air dryer mounting for looseness or damage. Repair mounting and replace cartridge. |
| 8. Unsatisfactory desiccant life. | A. Excessive system leakage. | A. Refer to Symptom 1, Remedy A. |
| | B. Wrong vehicle application for AD-IS® air dryer. | B. Refer to Symptom 2, Remedy C. |
| | C. Compressor passing excessive oil. | C. Check for proper compressor installation; if symptoms persist, replace compressor. Refer to Bendix Advanced Troubleshooting Guide for Air Brake Compressor (BW1971). |

| SYMPTOMS | CAUSE | REMEDY |
|---|---|---|
| 9. "Pinging" noise excessive during compressor loaded cycle. | A. Single cylinder compressor with high pulse cycles. | A. A slight "pinging" sound may be heard during system build up when a single cylinder compressor is used. If this sound is deemed objectionable, it can be reduced substantially by increasing the discharge line volume.<br>This can be accomplished by adding a 90 cubic inch (or larger) reservoir between the compressor and the AD-IS® air dryer and reservoir system. |
| 10. The air dryer purge piston cycles rapidly in the compressor unloaded (noncompressing) mode. | A. Compressor fails to "unload". | A. Check air hose from governor to compressor for a missing, kinked or restricted line. Install or repair air hose.<br>Repair or replace compressor unloader. |

# CHECK VALVE

## DATA AND SPECIFICATIONS

EN06Z0802I200001

| | |
|---|---|
| **Type** | **Spring type, wafer type valve** |

## DESCRIPTION

EN06Z0802C100002

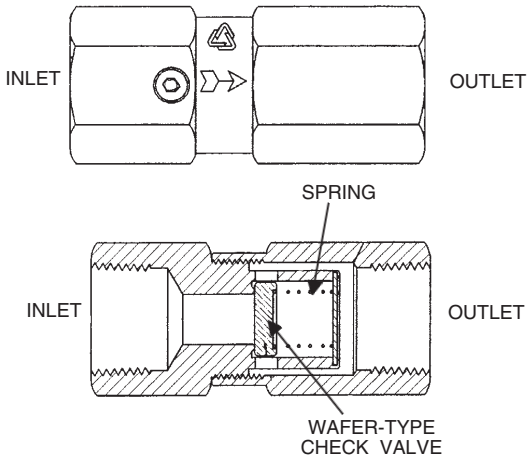


SAPH06Z080200008

# INSPECTION AND REPAIR

EN06Z0802H300001

**1. PREVENTATIVE MAINTENANCE**

Every 6 months, 1,800 operating hours or every 50,000 miles inspect all parts.

Replace any check valves leaking or showing signs of wear or deterioration. Check for proper operation.

**2. OPERATION & LEAKAGE CHECKS**

**NOTICE**

**Depending upon installation, it may be easier or necessary to completely remove check valves so that the following checks may be made.**

With air pressure present at outlet side of check valve and the inlet side open to atmosphere, coat the open end of the check valve with soap suds; a 1" bubble in 5 seconds is permissible.

If the check valve does not function as described, or leakage is excessive, it is recommended that it be replaced with a new genuine Bendix part available at any Bendix parts outlet.

**3. REMOVAL**

Block and hold vehicle by means other than air brakes.

Completely drain all reservoirs.

Disconnect air lines at single check valve and remove.

**4. DISASSEMBLY/ASSEMBLY**

**NOTICE**

**There are no Disassembly/Assembly procedures for SC-3 valves. They are non-serviceable items. If a valve does not meet the Operational and Leakage tests, it should be replaced at any authorized Bendix parts outlet.**

**5. TESTING AND TROUBLESHOOTING**

**Perform "2. OPERATION & LEAKAGE CHECK".**

**6. IMPORTANT! PLEASE READ**

**When working on or around a vehicle, the following general precautions should be observed:**

(1) Park the vehicle on a level surface, apply the parking brakes, and always block the wheels.

(2) Stop the engine when working around the vehicle.

(3) If the vehicle is equipped with air brakes, make certain to drain the air pressure from all reservoirs before beginning **ANY** work on the vehicle.

(4) Following the vehicle manufacturer's recommended procedures, deactivate the electrical system in a manner that removes all electrical power from the vehicle.

(5) When working in the engine compartment the engine should be shut off. Where circumstances require that the engine be in operation, **EXTREME CAUTION** should be used to prevent personal injury resulting from contact with moving, rotating, leaking, heated, or electrically charged components.

(6) Never connect or disconnect a hose or line containing pressure; it may whip. Never remove a component or plug unless you are certain all system pressure has been depleted.

(7) Never exceed recommended pressures and always wear safety glasses.

(8) Do not attempt to install, remove, disassemble or assemble a component until you have read and thoroughly understand the recommended procedures. Use only the proper tools and observe all precautions pertaining to use of those tools.
(9) Use only genuine Bendix replacement parts, components, and kits. Replacement hardware, tubing, hose, fittings, etc. should be of equivalent size, type, and strength as original equipment and be designed specifically for such applications and systems.
(10) Components with stripped threads or damaged parts should be replaced rather than repaired. Repairs requiring machining or welding should not be attempted unless specifically approved and stated by the vehicle or component manufacturer.
(11) Prior to returning the vehicle to service, make certain all components and systems are restored to their proper operating condition.

# BRAKE PEDAL

## OVERHAUL

EN06Z0802H200001

### IMPORTANT POINTS-DISMOUNTING

**1. DISCONNECT THE NYLON TUBE FROM THE BRAKE VALVE AND CLUTCH PIPE FROM THE MASTER CYLINDER**

**2. REMOVE THE CLUTCH MASTER CYLINDER AND DISCONNECT THE STEERING SHAFT**

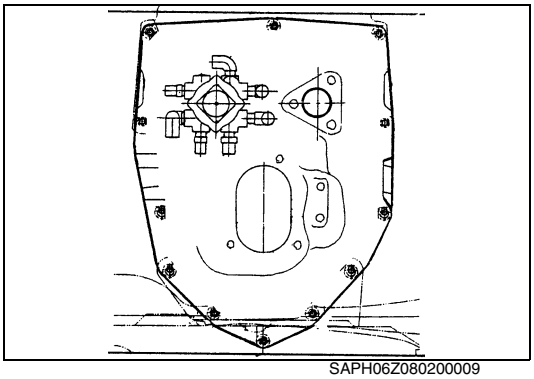
SAPH06Z080200009

**3. REMOVE THE PEDAL BRACKET ASSEMBLY**

(1) Loosen the bolts and remove the pedal bracket assembly.

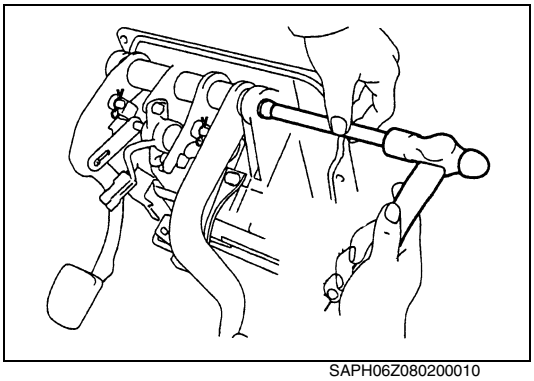
SAPH06Z080200010

**4. REMOVE THE BRAKE PEDAL.**

(1) Tap the shaft lightly using a brass rod and a hammer, remove the brake pedal from the pedal bracket assembly.

**NOTICE**

**Do not pull out the shaft because the brake pedal and the clutch pedal are installed by one shaft.**

**5. DISCONNECT THE PUSH ROD JOINT FROM THE BRAKE PEDAL LEVER**

**6. REMOVE THE BRAKE VALVE ASSEMBLY**

## IMPORTANT POINTS-MOUNTING

**1. INSTALL THE BRAKE VALVE ASSEMBLY**
**Install the brake valve assembly with the 4 nuts.**
**Tightening Torque:**
**18-26 N·m {184-265 kgf·cm, 13-19 lbf·ft}**

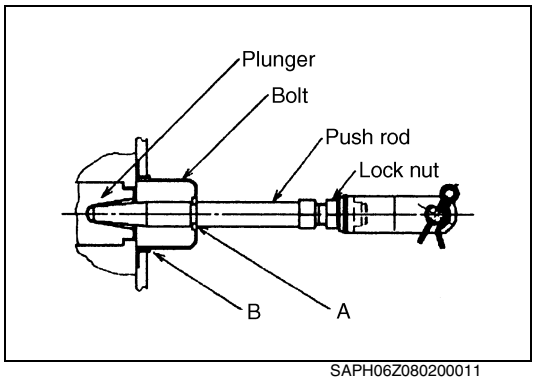

SAPH06Z080200011

**2. CONNECT THE PUSH ROD JOINT TO THE BRAKE PEDAL LEVER**

**NOTICE**
**A: The boot has to be securely fit into the groove of the push rod.**
**B: After assembling boot into the pedal bracket.**
**Make sure that the projection of all around the boot all around is seen above the surface of the pedal bracket.**

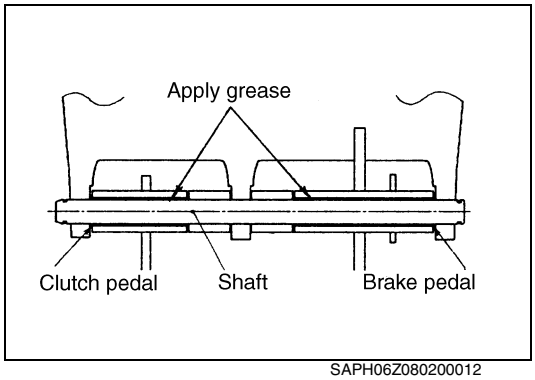

SAPH06Z080200012

**3. INSTALL THE BRAKE PEDAL**
(1) Apply thinly lithium grease, Fuji sunlight 2000 or its equivalent to the pedal bushing.
(2) Install the shaft into the pedal bracket and the pedal.
(3) Insert 2 snap rings to the pedal shaft.

**4. INSTALL THE PEDAL BRACKET ASSEMBLY**
**Install the pedal bracket assembly with bolts.**
**Tightening Torque:**
**18-26 N·m {184-265 kgf·cm, 13-19 lbf·ft}**

**5. INSTALL THE CLUTCH MASTER CYLINDER AND THE STEERING SHAFT**

**6. CONNECT THE NYLON TUBE TO THE BRAKE VALVE CONNECTOR**
**Tightening Torque:**
**ϕ3/8: 35-45 N·m {375-459 kgf·cm, 26-33 lbf·ft}**
**ϕ1/2: 50-60 N·m {510-612 kgf·cm, 37-44 lbf·ft}**

**NOTICE**
- **When assembling the nylon tubes be careful not to press them down by foot, and pinch them between other parts and so on.**
- **When fitting the joint to the nylon tube, be careful not to fold the tube. If it is folded or damaged, replace it with a new one.**

**7. INSPECT THE BRAKE PEDAL PLAY**
(1) Make sure that the installing height of the brake pedal "C" and the pedal play "B".
B: 2-5 mm {0.0788-0.1968 in.}
C: 164.6-174.6 mm {6.48-6.87 in.}

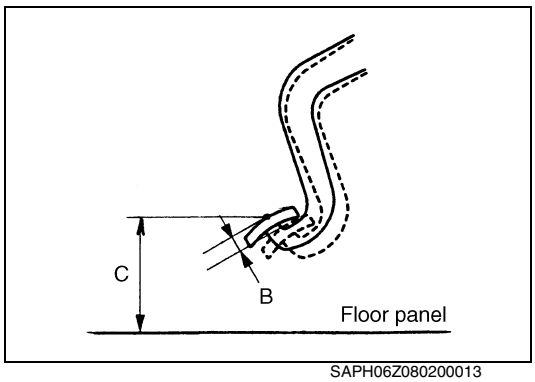

SAPH06Z080200013

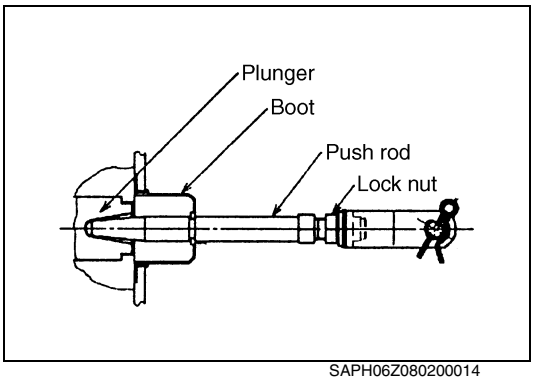

SAPH06Z080200014

(2) If the pedal play is out of the standard value, loosen the lock nut and turn the push rod to adjust the pedal play to the standard value.

**NOTICE**

**If you have loosened the push rod lock nut for the adjustment, retighten it securely.**

**Tightening Torque:**
**17.5-32.5 N·m {179-332 kgf·cm, 12.9-24 lbf·ft}**

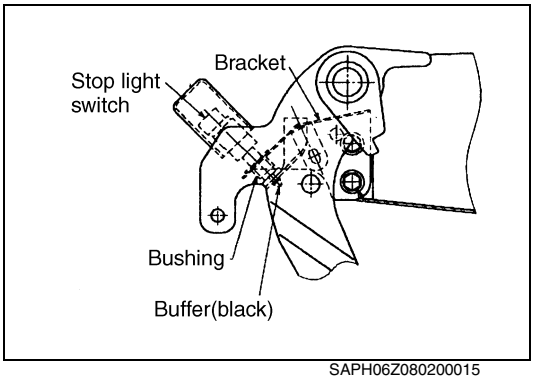

SAPH06Z080200015

**8. ADJUST AND INSPECT THE STOP LIGHT SWITCH**

(1) After installing bushing to the switch bracket, insert the stop light switch then twist it clockwise while making contact with the tip of the switch and the buffer, and fix it.

(2) After installing the switch, when releasing the brake pedal, make sure there is no contact between the switch and buffer.
Confirm the operation of the switch surely.

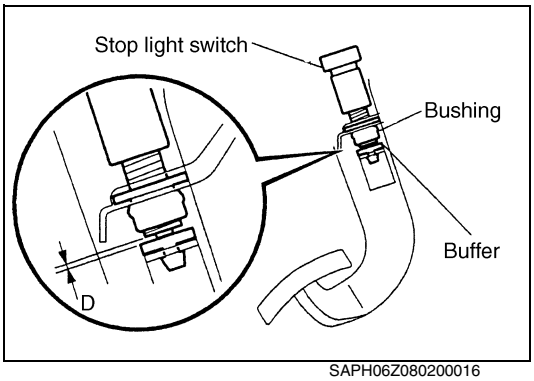

SAPH06Z080200016

(3) Check the clearance between stop light switch and buffer.
"D": 0.5-1.5 mm {0.0197-0.0590 in.}

# BRAKE VALVE

## DATA AND SPECIFICATIONS

EN06Z0802I200002

| | |
|---|---|
| **Type** | **Dual pistons and valves with a plunger type pedal** |

## DESCRIPTION

EN06Z0802C100003

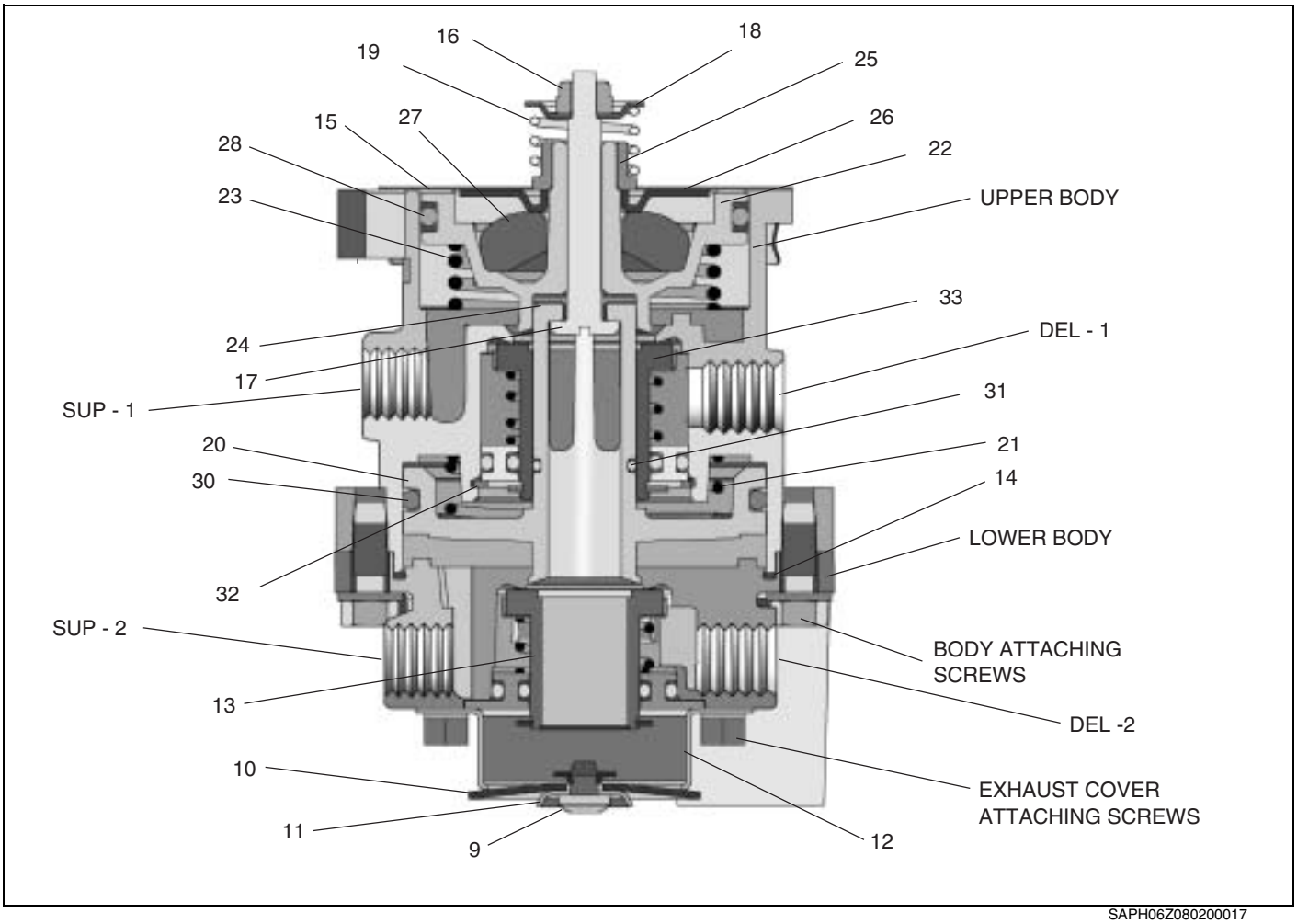


SAPH06Z080200017

| | | | |
|---|---|---|---|
| **9** | **Screw** | **21** | **Relay piston spring** |
| **10** | **Exhaust diaphragm** | **22** | **Primary piston** |
| **11** | **Washer** | **23** | **Graduating spring** |
| **12** | **Exhaust cover** | **24** | **Washer** |
| **13** | **Inlet valve** | **25** | **Primary piston spring seat nut** |
| **14** | **Seal ring** | **26** | **Spring seat** |
| **15** | **Primary piston retainer** | **27** | **Rubber spring** |
| **16** | **Lock nut** | **28** | **Piston O-ring** |
| **17** | **Stem** | **30** | **O-ring** |
| **18** | **Spring seat** | **31** | **O-ring** |
| **19** | **Stem spring** | **32** | **Retaining ring** |
| **20** | **Relay** | **33** | **Primary inlet and exhaust valve** |

# COMPONENT LOCATOR

EN06Z0802D100001

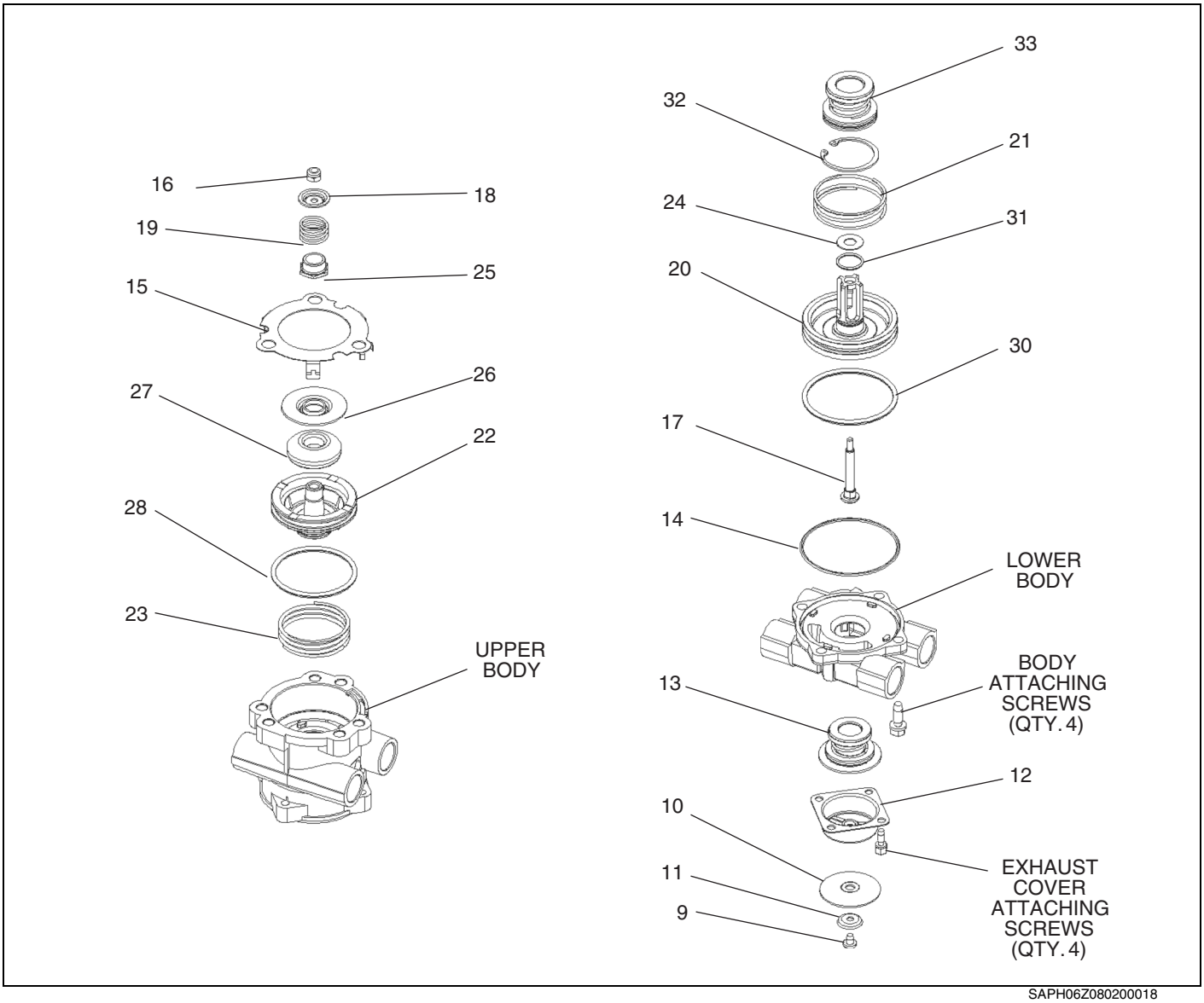


SAPH06Z080200018

| | | | |
|---|---|---|---|
| 9 | Screw | 21 | Relay piston spring |
| 10 | Exhaust diaphragm | 22 | Primary piston |
| 11 | Washer | 23 | Graduating spring |
| 12 | Exhaust cover | 24 | Washer |
| 13 | Inlet valve | 25 | Primary piston spring seat nut |
| 14 | Seal ring | 26 | Spring seat |
| 15 | Primary piston retainer | 27 | Rubber spring |
| 16 | Lock nut | 28 | Piston O-ring |
| 17 | Stem | 30 | O-ring |
| 18 | Spring seat | 31 | O-ring |
| 19 | Stem spring | 32 | Retaining ring |
| 20 | Relay piston | 33 | Primary inlet and exhaust valve |

# INSPECTION AND REPAIR

EN06Z0802H200002

**1. PREVENTIVE MAINTENANCE**

**Important Note:** Review the warranty policy before performing any intrusive maintenance procedures. An extended warranty may be voided if intrusive maintenance is performed during this period.

Because no two vehicles operate under identical conditions, maintenance and maintenance intervals will vary. Experience is a valuable guide in determining the best maintenance interval for any one particular operation.

Visually check for physical damage to the AD-IP such as chaffed or broken air and electrical lines and broken or missing parts.

**Every 3 months, or 25,000 miles or 900 operating hours:**

Clean any accumulated dirt, gravel, or foreign material away from the heel of the treadle, plunger boot, and mounting plate.

Using light oil, lubricate roller, roller pin, and hinge pin.

Check the rubber plunger boot for cracks, holes or deterioration and replace if necessary. Also, check mounting plate and treadle for integrity.

Apply 2 to 4 drops of oil between plunger and mounting plate **- do not over oil!**

**Every year, or 100,000 miles, or 3,600 operating hours:**

Disassemble: clean parts with mineral spirits, replace all rubber parts, or any part worn or damaged. Check for proper operation before placing vehicle in service.

**2. SERVICE CHECKS**

(1) Operating check

Check the delivery pressure of both primary and secondary circuits using accurate test gauges. Depress the treadle to several positions between the fully released and fully applied positions, and check the delivered pressure on the test gauges to see that it varies equally and proportionately with the movement of the brake pedal.

After a full application is released, the reading on the test gauges should fall off to zero promptly. It should be noted that the primary circuit delivery pressure will be about 2 PSI greater than the secondary circuit delivery pressure with both supply reservoirs at the same pressure. This is normal for this valve.

**IMPORTANT**

**A change in vehicle braking characteristics or a low pressure warning may indicate a malfunction in one or the other brake circuit, and although the vehicle air brake system may continue to function, the vehicle should not be operated until the necessary repairs have been made and both braking circuits, including the pneumatic and mechanical devices, are operating normally. Always check the vehicle brake system for proper operation after performing brake work and before returning the vehicle to service.**

(2) Leakage check

a. Make and hold a high pressure (80 psi) application.
b. Coat the exhaust port and body of the brake valve with a soap solution.
c. Leakage permitted is a one inch bubble in 3 seconds. If the brake valve does not function as described above or leakage is excessive, it is recommended that it be re-placed with a new or remanufactured unit, or repaired with genuine Bendix parts available at authorized Bendix parts outlets.

Refer to figures on page BR02-23 and 24 for item numbers referenced in parenthesis.

**3. REMOVAL**

(1) Chock the vehicle wheels or park the vehicle by mechanical means. (Block and hold vehicle by means other than air brakes.) Drain all air system reservoirs.
(2) Identify and disconnect all supply and delivery lines at the brake valve.
(3) Remove the brake valve and treadle assembly from the vehicle by removing the three cap screws on the outer bolt circle of the mounting plate. The basic brake valve alone can be removed by removing the three cap screws on the inner bolt circle.

**4. DISASSEMBLY**

(1) If the entire brake valve and treadle assembly was removed from the vehicle, remove the three cap screws securing the treadle assembly to the basic brake valve.
(2) Remove the screw (9) securing the exhaust diaphragm (10) and washer (11) to the exhaust cover (12).
(3) Remove the four screws that secure the exhaust cover (12) to the lower body.
(4) Remove the secondary inlet and exhaust valve assembly (13) from the lower body.
(5) Remove the four hex head cap screws securing the lower body to the upper body and separate the body halves.
(6) Remove the rubber seal ring (14) from the lower body.
(7) **For E-8P:** While applying thumb pressure to the primary piston (22), lift out and up on the three lock tabs of the primary piston retainer (15).

**⚠ CAUTION**

**Before proceeding with the disassembly, refer to figures on pages BR02-23 and 24, and note that the lock nut (16) and stem (17) are used to contain the primary piston return spring (for E-8P: 23), stem spring (19), and the relay piston spring (21). The combined force of these springs is approximately 50 pounds and care must be taken when removing the lock nut as the spring forces will be released. It is recommended that the primary piston and relay piston be manually or mechanically contained while the nut and stem are being removed.**

(8) Using a 3/8" wrench, hold the lock nut (16) on the threaded end of the stem (17). Insert a screwdriver to restrain the stem, remove the lock nut (16), spring seat, (18) and stem spring (19).
(9) Remove the relay piston (20), relay piston spring (21), primary piston (**E-8P:** 22) and primary piston return spring (**E-8P:** 23) from the upper body. Use care so as not to nick seats.
(10) A small washer (24) will be found in the cavity of the lower side of the primary piston (**for E-8P**: 22).
(11) **For E-8P:** Disassemble the primary piston by rotating the spring seat nut (25) counterclockwise. Separate the spring seat nut, spring seat (26), and rubber spring (27) and remove the piston O-ring (28).
(12) Remove the large and small O-rings (30 & 31) from the relay piston (20).
(13) Remove the retaining ring (32) securing the primary inlet and exhaust valve assembly (33) in the upper body and remove the valve assembly.

**5. CLEANING AND INSPECTION**

(1) Wash all metal parts in mineral spirits and dry.
(2) Inspect all parts for excessive wear or deterioration.
(3) Inspect the valve seats for nicks or burrs.
(4) Check the springs for cracks or corrosion.
(5) Replace all rubber parts and any part not found to be serviceable during inspection, use only genuine Bendix replacement parts.

**6. ASSEMBLY**

Prior to reassembling, lubricate all O-rings, O-ring grooves, piston bores, and metal to metal moving surfaces with Dow Corning 55 O-ring lubricant (Bendix piece number 291126).

**IMPORTANT**

**All torques specified in this manual are assembly torques and can be expected to fall off, after assembly is accomplished. Do not retorque after initial assembly torques fall.**

(1) Install the primary inlet and exhaust assembly (33) in the upper body and replace the retaining ring (32) to secure it. Be sure the retaining ring is seated completely in its groove.
(2) Install the large and small O-rings (30 & 31) on the relay piston (20).
(3) **For E-8P:** Install O-ring (28) in the primary piston (22) O-ring groove.
(4) **For E-8P:** Install the rubber spring (do not lubricate) (27), concave side down in the primary piston (22) and place the spring seat (26), flat side up, over the rubber spring.
(5) **For E-8P:** Install the primary piston spring seat nut (25), with its hex closest to the spring seat, and rotate clockwise until the top surface of the spring seat is even with the top surface of the piston. Set aside.
(6) Place relay piston spring (21) in concave portion of relay piston (20) and install relay piston through primary inlet/exhaust assembly (33) into under side of upper body.
(7) Place screwdriver, blade up, in vise. Insert stem (17) through the relay piston upper body sub assembly, slide this assembly over the blade of the secured screwdriver, engage the screwdriver blade in the slot in the head of the stem.
(8) Place the washer (24) over the stem (17) and on top of the relay piston (20).
(9) Install primary return spring (**E-8P:** 23) in upper body piston bore.
(10) **For E-8P:** Install the primary piston rubber spring sub assembly (1. (4) and (5)) over the stem, into the up-per body piston bore.
(11) Compress piston(s) (**For E-8P:** the relay piston (20)) and retaining ring into the upper body from either side and hold compressed, either manually or mechanically. **See the cautionary note under 3. (7) in the Disassembly section of this manual.**
(12) Place the stem spring (19) (**E-8P:** place over the spring seat nut (25)), the spring seat (18) (concave side up) and lock nut (16) on the stem (17). Torque to 20-30 inch pounds.
(13) **For E-8P:** Install the primary piston retainer (15) over the piston, making certain all three lock tabs have engaged the outer lip of the body.
(14) Replace the rubber seal ring (14) on the lower body.
(15) Install the 4 hex head cap screws securing the lower body to the upper body. Torque to 30-60 inch pounds.
(16) Install the secondary inlet and exhaust valve assembly (13) on the lower body.
(17) Install the screws that secure the exhaust cover (12) to the lower body. Torque to 20-40 inch pounds.
(18) Secure the screw (9) holding the exhaust diaphragm (10) and the diaphragm washer (11) to the exhaust cover (12). Torque to 5-10 inch pounds.
(19) Install all air line fittings and plugs making certain thread sealant material does not enter valve.

**7. VALVE INSTALLATION**

(1) Install the assembled brake valve on the vehicle.
(2) Reconnect all air lines to the valve using the identification made during VALVE REMOVAL step 2.
(3) After installing the brake valve assembly, perform the "OPERATION AND LEAKAGE CHECKS" before placing the vehicle in service.

**8. IMPORTANT: MAINTENANCE PRECAUTIONS**

When working on or around a vehicle, the following general precautions should be observed:

(1) Park the vehicle on a level surface, apply the parking brakes, and always block the wheels.

(2) Stop the engine when working around the vehicle.

(3) Drain the air pressure from all reservoirs before beginning ANY work on the vehicle.

(4) Following the vehicle manufacturer's recommended procedures, deactivate the electrical system in a manner that removes all electrical power from the vehicle.

(5) When working in the engine compartment the engine should be shut off. Where circumstances require that the engine be in operation, EXTREME CAUTION should be used to prevent personal injury resulting from contact with moving, rotating, leaking, heated, or electrically charged components.

(6) Never connect or disconnect a hose or line containing pressure; it may whip. Never remove a component or plug unless you are certain all system pressure has been depleted.

(7) Never exceed recommended pressures and always wear safety glasses.

(8) Do not attempt to install, remove, disassemble, or assemble a component until you have read and thoroughly understand the recommended procedures. Use only the proper tools and observe all precautions pertaining to use of those tools.

(9) Use only genuine Bendix replacement parts, components, and kits. Replacement hardware, tubing, hose, fittings, etc. should be of equivalent size, type, and strength as original equipment and be designed specifically for such applications and systems.

(10) Components with stripped threads or damaged parts should be replaced rather than repaired. Repairs requiring machining or welding should not be attempted unless specifically approved and stated by the vehicle or component manufacturer.

(11) Prior to returning the vehicle to service, make certain all components and systems are restored to their proper operating condition.

# RELAY VALVE

## DATA AND SPECIFICATIONS

EN06Z0802I200003

| | |
|---|---|
| **Type** | **Diaphragm type with double check valve combined** |
| **Pressure difference between signal and outlet pressure** | **29.4 kPa {0.3 kgf/cm$^2$, 4.26 lbf/in$^2$.}** |

## DESCRIPTION

EN06Z0802C100004

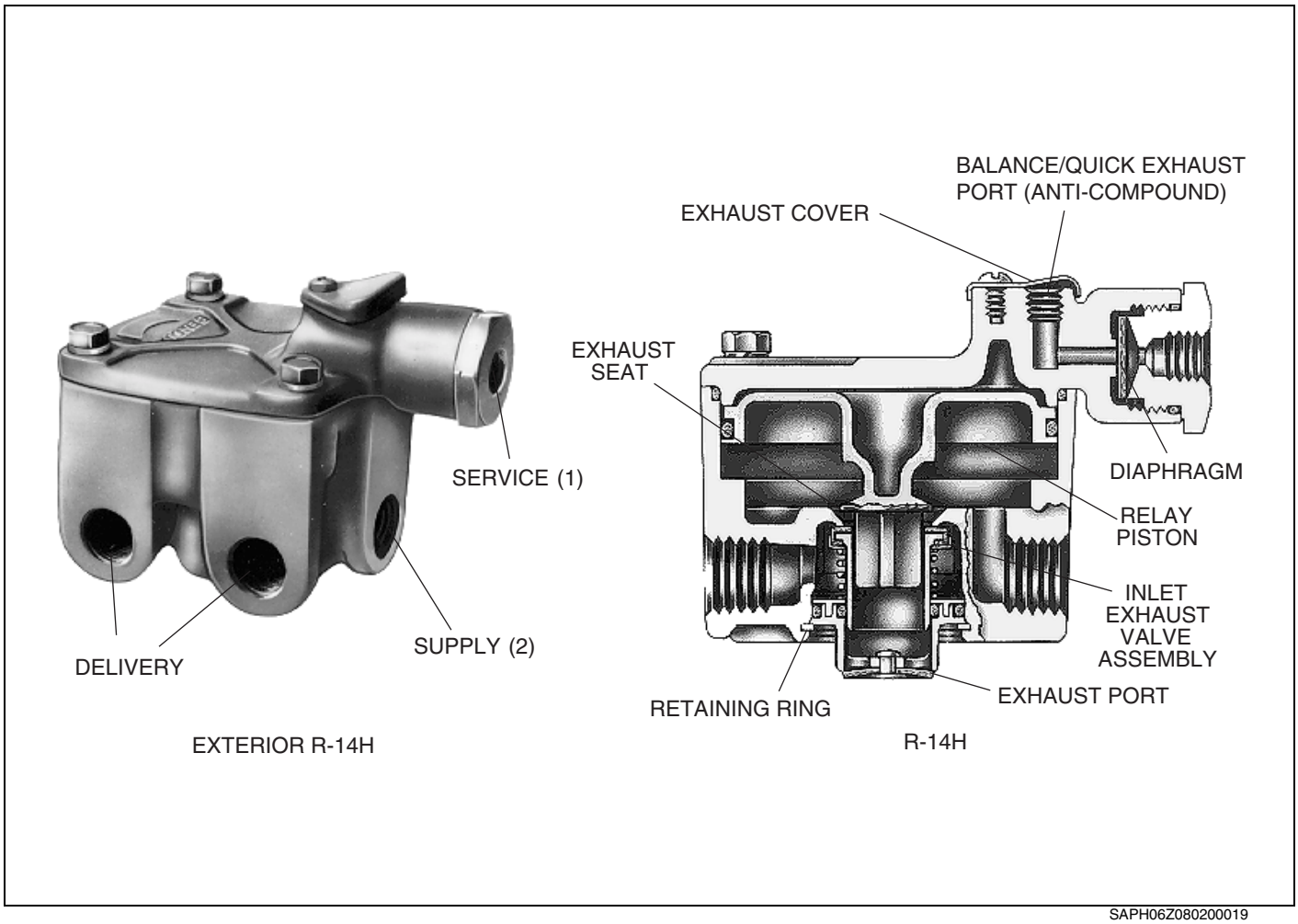


SAPH06Z080200019

## INSPECTION AND REPAIR

EN06Z0802H200003

**1. PREVENTIVE MAINTENANCE**

**Important Note:** Review the warranty policy before performing any intrusive maintenance procedures. An extended warranty may be voided if intrusive maintenance is performed during this period.

Because no two vehicles operate under identical conditions, maintenance and maintenance intervals will vary. Experience is a valuable guide in determining the best maintenance interval for any one particular operation.

(1) Every 3 months or 25,000 miles or 900 operating hours check for proper operation.

(2) Every 12 months or 100,000 miles or 3,600 operating hours: disassemble valve, clean parts with mineral spirits. Replace all rubber parts and any part worn or damaged. Check for proper operation before placing vehicle in service.

**2. OPERATIONAL AND LEAKAGE TEST**

(1) Chock the wheels, fully charge air brake system and adjust the brakes.
(2) Make several brake applications and check for prompt application and release at each wheel.
(3) Check for inlet valve and O-ring leakage.
   a. Make this check with the service brakes released when the R-12 or R-14 is used to control the service brakes.
   b. Make the check with the spring brakes applied (PARK) when the R-14 is used to control the spring brakes. Coat the exhaust port and the area around the retaining ring with a soap solution; a 1 inch bubble in 3 seconds leakage is permitted.
(4) Check for exhaust valve leakage.
   a. Make this check with the service brakes fully applied if the R-12 or R-14 control the service brakes.
   b. Make this check with the spring brakes fully released if the R-14 is used to control the spring brakes. Coat the exhaust port with a soap solution; a 1 inch bubble in 3 seconds leakage is permitted. Coat the outside of the valve where the cover joins the body to check for seal ring leakage; no leakage is permitted.
(5) If the R-14 is used to control the spring brakes, place the park control in the released position and coat the balance port with a soap solution to check the diaphragm and its seat. Leakage equivalent to a 1 inch bubble in 3 seconds is permitted.

**NOTICE**
**If the anti-compound feature is in use, the line attached to the balance port must be disconnected to perform this test.**

If the valves do not function as described above, or if leakage is excessive, it is recommended that the valves be replaced with new or remanufactured units or repaired with genuine Bendix parts, available at any authorized Bendix parts outlet.

**3. REMOVAL**

(1) Block and hold vehicle by means other than air brakes.
(2) Drain air brake system reservoirs.
(3) If entire valve is to be removed, identify air lines to facilitate installation.
(4) Disconnect air lines from valve*.
(5) Remove valve from reservoir or if remotely mounted, remove mounting bolts and then valve.

*It is generally not necessary to remove entire valve to service the inlet/exhaust valve. The inlet/exhaust valve insert can be removed by removing the snap ring, exhaust cover assembly and then inlet/exhaust valve.

**⚠ CAUTION**
**Drain all reservoirs before attempting to remove the inlet exhaust valve.**

**4. DISASSEMBLY**

**NOTICE**
**Prior to disassembly, mark the location of the mounting bracket to the cover and the cover to the body.**

(1) Remove the four (4) cap screws and lock washers securing the cover to the body.
(2) Remove the cover, sealing ring, and mounting bracket.

(3) Remove the piston and O-ring from the body.
(4) While depressing the exhaust cover, remove the retaining ring and slowly relax the spring beneath the exhaust cover.
(5) Remove the exhaust cover assembly and O-rings.
(6) Remove the inlet/exhaust valve return spring from the body.
(7) Remove the inlet/exhaust valve from the body.
(8) Remove the valve retainer from the inlet/exhaust valve.
(9) Remove the Phillips head screw and exhaust cover from the R-14 cover.
(10) Remove the service port cap nut and O-ring from the R-14.
(11) Remove the diaphragm from the R-14 cover.

**5. CLEANING AND INSPECTION**

(1) Wash all metal parts in mineral spirits and dry them thoroughly.

**NOTICE**
**When rebuilding, all springs and all rubber parts should be replaced.**

(2) Inspect all metal parts for deterioration and wear, as evidenced by scratches, scoring and corrosion.
(3) Inspect the exhaust valve seat on the relay piston for nicks and scratches which could cause excessive leakage.
(4) Inspect the inlet valve seat in the body for scratches and nicks, which could cause excessive leakage.
(5) Inspect the exhaust seat of the quick release diaphragm in the R-14 cover and make sure all internal air passages in this area are open and clean and free of nicks and scratches.
(6) Replace all parts not considered serviceable during these inspections and all springs and rubber parts. Use only genuine Bendix replacement parts, available from any authorized Bendix parts outlet.

**6. ASSEMBLY**

**NOTICE**
**All torque specified in this manual are assembly torque and can be expected to fall off slightly after assembly. Do not re-torque after initial assembly torque fall. For assembly, hand wrenches are recommended.**

Prior to assembly, lubricate all O-rings, O-ring bores and any sliding surface with a silicone lubricant equivalent to Dow Corning #10.
(1) Install large piston O-ring on piston.
(2) Install inner and outer O-rings in the exhaust cover assembly.
(3) Install the sealing ring on the cover.
(4) Install piston in body, taking care not to damage the piston O-ring.
(5) Noting the reference marks made during disassembly, install the cover on the valve body and the mounting bracket on the cover.
(6) Secure the mounting bracket and cover to the body using the four (4) cap screws and lock washers. Torque to 80-120 inch pounds.
(7) Install the valve retainer on the inlet/exhaust valve and install in the body.
(8) Install the inlet/exhaust valve return spring in the body.
(9) Install the exhaust cover assembly in the body, taking care not to damage the O-ring.
(10) While depressing the exhaust cover, install the retaining ring. Make certain the retainer is completely seated in its groove in the body.
(11) Install the R-14 service port cap nut O-ring on the cap nut. Install the diaphragm in the R-14 cover making certain it is positioned between the guide ribs in the cover.
(12) Install the service port cap nut and torque to 150 inch pounds.
(13) If the quick release exhaust port was protected with an exhaust cover, install the cover using the #10-24 Phillips head screw. Torque to approx. 15-25 inch pounds.

(14) Test the valves as outlined in the Operational and Leakage Test on page BR02-30 before returning the valve to service.

**7. INSTALLATION**

(1) Clean air lines.
(2) Inspect all lines and/or hoses for damage and replace as necessary.
(3) Install valve and tighten mounting bolts.
(4) Connect air lines to valve (plug any unused ports).
(5) Test valve as outlined in Operational and Leakage Tests.

**8. IMPORTANT! PLEASE READ**

When working on or around a vehicle, the following general precautions should be observed:

(1) Park the vehicle on a level surface, apply the parking brakes, and always block the wheels.
(2) Stop the engine when working around the vehicle.
(3) If the vehicle is equipped with air brakes, make certain to drain the air pressure from all reservoirs before beginning ANY work on the vehicle.
(4) Following the vehicle manufacturer's recommended procedures, deactivate the electrical system in a manner that removes all electrical power from the vehicle.
(5) When working in the engine compartment the engine should be shut off. Where circumstances require that the engine be in operation, EXTREME CAUTION should be used to prevent personal injury resulting from contact with moving, rotating, leaking, heated, or electrically charged components.
(6) Never connect or disconnect a hose or line containing pressure; it may whip. Never remove a component or plug unless you are certain all system pressure has been depleted.
(7) Never exceed recommended pressures and always wear safety glasses.
(8) Do not attempt to install, remove, disassemble or assemble a component until you have read and thoroughly understand the recommended procedures. Use only the proper tools and observe all precautions pertaining to use of those tools.
(9) Use only genuine Bendix replacement parts, components, and kits. Replacement hardware, tubing, hose, fittings, etc. should be of equivalent size, type, and strength as original equipment and be designed specifically for such applications and systems.
(10) Components with stripped threads or damaged parts should be replaced rather than repaired. Repairs requiring machining or welding should not be attempted unless specifically approved and stated by the vehicle or component manufacturer.
(11) Prior to returning the vehicle to service, make certain all components and systems are restored to their proper operating condition.

# SPRING BRAKE MODULATING VALVE

## DESCRIPTION

EN06Z0802C100005

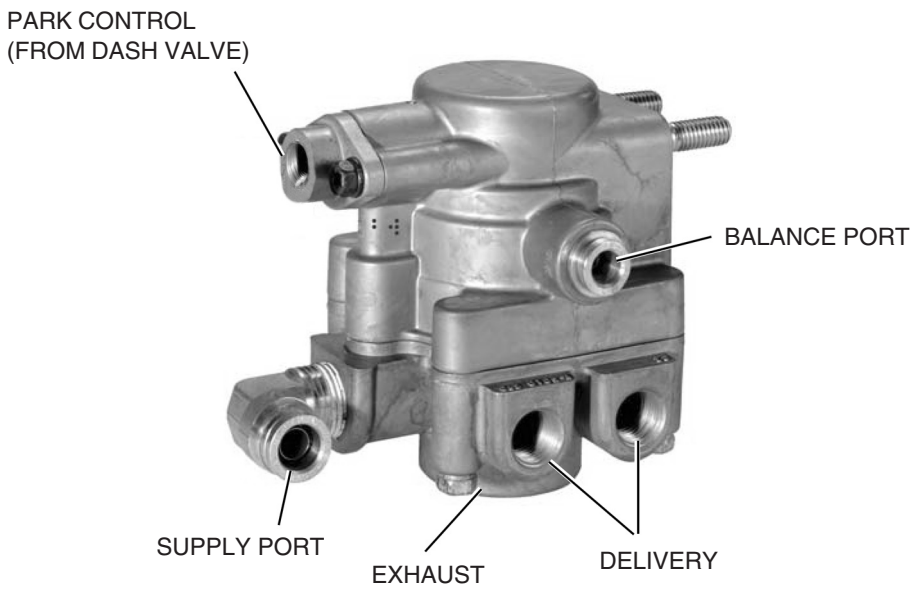


SAPH06Z080200020

# COMPONENT LOCATOR

EN06Z0802D100002

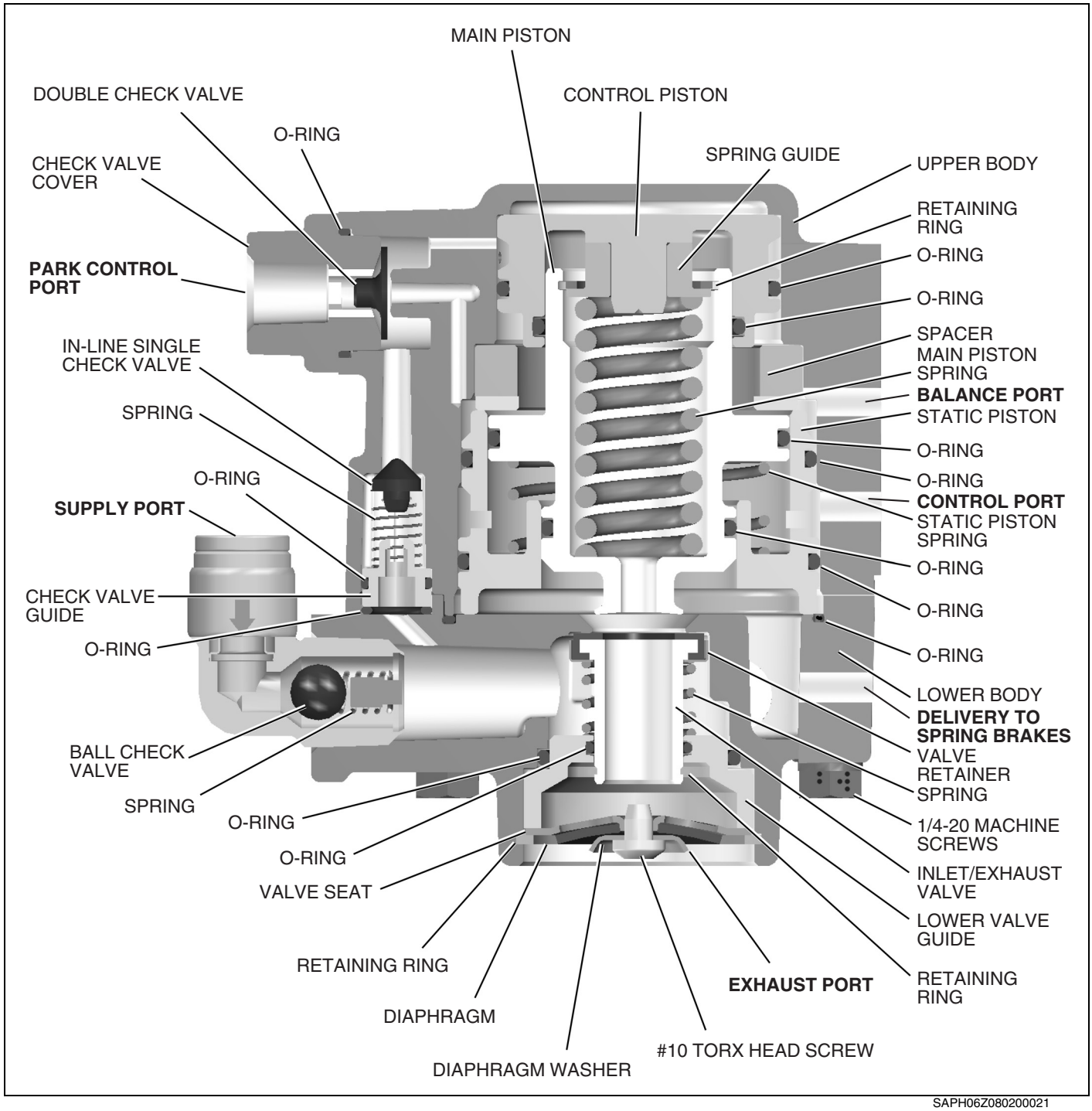


SAPH06Z080200021

# INSPECTION AND REPAIR

EN06Z0802H200004

**1. PREVENTIVE MAINTENANCE**

**The SR-7™ valve should be inspected every 6 months or 1500 operating hours, whichever comes first, for proper operation. Should the SR-7™ valve not meet the elements of the operational tests noted in this document, further investigation and service of the valve may be required.**

**2. SERVICE CHECKS**

(1) Operating tests

Block vehicle and hold by means other than vehicle brakes.

Charge air brake system to governor cut-out pressure.

a. Place parking control valve in "park" position. Observe that spring brake actuators apply promptly. Remove one line from delivery port of the SR-7™ valve and install test gauge known to be accurate. Place parking control valve in "release" position. Observe that spring brake actuators release fully.
b. With parking control valve in "release" position, note gauge pressure reading. (Correct spring brake actuator hold-off pressure is 107 psi nominally.)
c. Place parking control valve in "park" position - gauge reading should drop to zero promptly. A lag (more than 3 seconds) in drop of pressure would indicate faulty operation.
d. With the parking control valve in the "park" position, gradually apply foot brake valve and note a pressure reading increase on the gauge installed in the SR-7™ valve delivery port.
e. Place parking control valve in "release" position.
f. Drain the reservoir, which supplies the rear service brake circuit, apply the foot brake valve several times and note that pressure reading on gauge decreases each time foot brake valve is applied (spring brake modulation). After the foot brake valve has been applied several times, pressure on gauge will drop to the point where release of the spring brake actuators will no longer occur.

**3. LEAKAGE TEST**

Place the park control valve in the "release" position; using a soap solution, coat all ports including the exhaust port. A 1" bubble in 3 seconds is permitted.

If the valve does not function as described, or if leakage is excessive, it is recommended that it be replaced with a new or remanufactured unit available from a Bendix parts outlet.

**⚠ WARNING**

**DO NOT ATTEMPT TO DISASSEMBLE THE SR-7™ VALVE. THE VALVE CONTAINS HIGH SPRING FORCES THAT COULD RESULT IN PERSONAL INJURY IF DISASSEMBLY IS ATTEMPTED!**

**4. WARNING! PLEASE READ AND FOLLOW THESE INSTRUCTIONS TO AVOID PERSONAL INJURY OR DEATH:**

When working on or around a vehicle, the following general precautions should be observed at all times.

(1) Park the vehicle on a level surface, apply the parking brakes, and always block the wheels. Always wear safety glasses.

(2) Stop the engine and remove ignition key when working under or around the vehicle. When working in the engine compartment, the engine should be shut off and the ignition key should be removed. Where circumstances require that the engine be in operation, EXTREME CAUTION should be used to prevent personal injury resulting from contact with moving, rotating, leaking, heated or electrically charged components.

(3) Do not attempt to install, remove, disassemble or assemble a component until you have read and thoroughly understand the recommended procedures. Use only the proper tools and observe all precautions pertaining to use of those tools.

(4) If the work is being performed on the vehicle's air brake system, or any auxiliary pressurized air systems, make certain to drain the air pressure from all reservoirs before beginning ANY work on the vehicle. If the vehicle is equipped with an AD-IS™ air dryer system or a dryer reservoir module, be sure to drain the purge reservoir.

(5) Following the vehicle manufacturer's recommended procedures, deactivate the electrical system in a manner that safely removes all electrical power from the vehicle.

(6) Never exceed manufacturer's recommended pressures.

(7) Never connect or disconnect a hose or line containing pressure; it may whip. Never remove a component or plug unless you are certain all system pressure has been depleted.

(8) Use only genuine Bendix replacement parts, components and kits. Replacement hardware, tubing, hose, fittings, etc. must be of equivalent size, type and strength as original equipment and be designed specifically for such applications and systems.

(9) Components with stripped threads or damaged parts should be replaced rather than repaired. Do not attempt repairs requiring machining or welding unless specifically stated and approved by the vehicle and component manufacturer.

(10) Prior to returning the vehicle to service, make certain all components and systems are restored to their proper operating condition.

**5. REMOVAL**

(1) Prior to removing the SR-7™ valve, apply the parking brakes and drain all the vehicle reservoirs.

(2) Identify all air lines before disconnecting.

(3) Remove the two mounting nuts that secure the valve to the frame rail and remove the valve.

**6. INSTALLATION**

(1) Align the mounting studs with the mounting holes on the vehicle frame rail. Tighten the mounting nuts to 180-220 in. lbs.

(2) Install the valve onto the vehicle ensuring all ports are connected as marked during disassembly.

**7. TESTING THE REPLACEMENT SR-7™ SPRING BRAKE MODULATING VALVE**

Perform operating and leakage tests as outlined in "Operating Tests" section.

# SPRING BRAKE CONTROL VALVE

## DESCRIPTION

EN06Z0802C100006

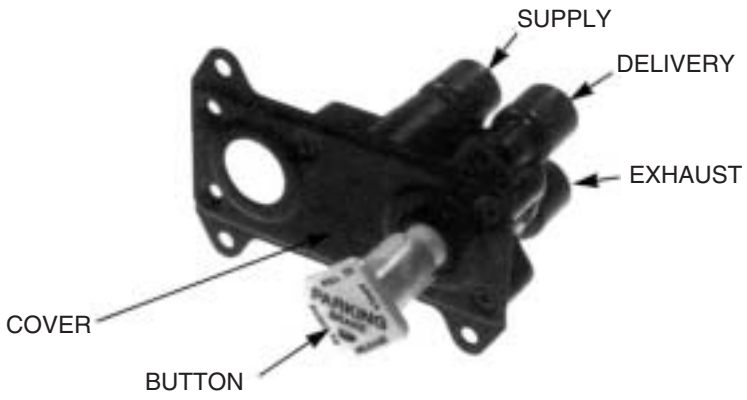


**Ports:**

| Port | Embossed I.D. |
|---|---|
| Primary Reservoir Supply | Supply 11 |
| Secondary Reservoir Supply | Supply 12 |
| Delivery | Delivery 21 |
| Exhaust | Exhaust 3 |

SAPH06Z080200022

# COMPONENT LOCATOR

EN06Z0802D100003

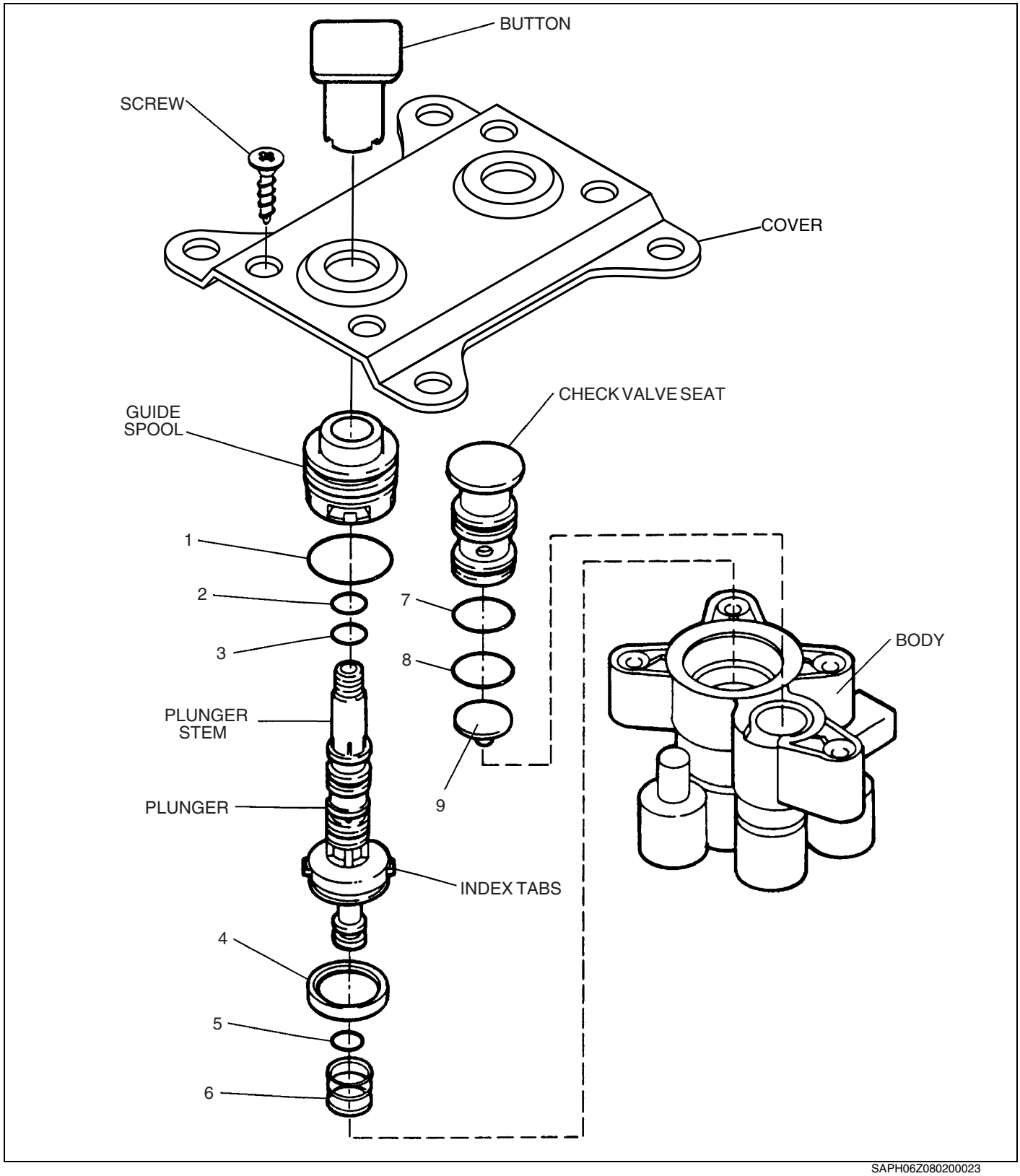


SAPH06Z080200023

# INSPECTION AND REPAIR

EN06Z0802H200005

**1. PREVENTIVE MAINTENANCE**

(1) Every 3 months; 25,000 miles; or 900 operating hours; or during the vehicle chassis lubrication interval, make the visual inspections noted in "SERVICE CHECKS."

(2) Every 12 months; 100,000 miles; or 3,600 operating hours, perform "OPERATIONAL AND LEAKAGE TESTS."

**2. SERVICE CHECKS**

(1) Remove any accumulated contaminants. Visually inspect the valve's exterior for excessive wear or physical damage. Repair/replace as necessary.

(2) Inspect all air lines connected to the valve for signs of wear or physical damage. Repair/replace as necessary.

(3) Test air line fittings for excessive leakage. Repair/replace as necessary.

**3. LEAKAGE AND OPERATIONAL TESTS**

To perform the following tests, connect two separate 120 psi air sources to the PP-DC supply ports. Tee an accurate test gauge into the supply lines, and provide for a means to control supply line pressure. Connect a small volume with a gauge to the delivery port.

(1) Leakage test

a. Supply the valve with 120 psi from the primary reservoir supply port. With the button out, coat the exhaust port and the plunger stem with a soap solution. Leakage should not exceed a 1" bubble in 5 seconds. There should be no leakage from the secondary reservoir supply port.

b. With the button out, supply the valve with 120 psi from the secondary reservoir supply port. There should be no leakage from the primary reservoir supply port.

c. With the button in, coat the exhaust port and the plunger stem with a soap solution. Leakage at both areas should not exceed a 1" bubble in 3 seconds.

(2) Operational test

a. With the button out, supply either supply port with 120 psi of air. Then push the button in. Air pressure should rise in the delivery volume equivalent to supply pressure.

b. Pull the button out. Delivery pressure should exhaust to 0 psi.

c. Build each supply source to 120 psi. Decrease supply pressure at the secondary service reservoir supply port at a rate of 10 psi per second. Primary supply pressure and delivery pressure should not drop below 100 psi.

Repeat the test for decreasing primary service reservoir pressure.

d. Build each supply source to 120 psi. Then decrease both supply pressures to below 20 to 30 psi. The button should automatically "pop" out when pressure drops within that range.

**4. REMOVAL**

(1) Identify and mark or label all air lines and their connections on the valve.

(2) Remove the PP-DC from the vehicle and save the mounting hardware.

**5. INSTALLATION**

(1) Install the PP-DC in its location on the dashboard. Using the mounting hardware saved in "REMOVAL," secure the valve to the vehicle.
(2) Reconnect all air lines to the valve using the identification made in "REMOVAL."
(3) Perform "OPERATIONAL AND LEAKAGE TESTS" before placing the vehicle back in service.

**6. DISASSEMBLY**

The following disassembly and assembly procedures are for reference only. Always have the appropriate maintenance kit on hand and use its instructions in lieu of those presented here. Refer to figure on page BR02-38 throughout the procedure.

(1) Turn the button counterclockwise to remove it from the plunger stem.
(2) Remove the four screws that secure the cover to the body, and remove the cover.
(3) Pull the plunger stem to remove the plunger and the guide spool from the body.
(4) Remove plunger spring (6) and discard.
(5) If necessary, use a screwdriver to carefully remove the check valve seat from the body. Be sure not to damage the check valve seat or the body.
(6) Remove and discard check valve seat O-rings (7) and (8).
(7) Turn the body upside down and gently tap it on a flat surface to remove check valve (9). Discard the check valve.
(8) Remove the guide spool from the plunger. Remove and discard O-ring (1) from the guide spool.
(9) Remove and discard O-rings (2), (3) and (5) from the plunger. Also remove and discard exhaust seal (4).

**7. CLEANING & INSPECTION**

(1) Wash all metal parts in mineral spirits and thoroughly dry.
(2) Inspect all re-usable parts for excessive wear or damage. Inspect the body for gouges or deep scuffing. Replace key numbers 1-9 (and any parts not determined usable) with genuine Bendix replacements.

**8. ASSEMBLY**

Before assembly, lubricate all O-rings, O-ring grooves, rubbing surfaces and bores with Bendix silicone lubricant (Pc. No. 291126) or equivalent.

(1) Place check valve (9) into its seat in the body with its flat surface facing upward. If necessary, reach into the body to make sure the valve is seated evenly in the bore.
(2) Install O-rings (7) and (8) on the check valve seat and install the check valve seat into the body. Make sure the seat is fully seated-its surface should be even with the body's surface.
(3) Install plunger spring (6) into the body. Make sure it stands upright and is seated properly in the body bore. (It should surround the protrusion or "lip" at the bottom of the body bore.)
(4) Install O-rings (2), (3), (5) and exhaust seal(4) onto the plunger. Then install the plunger into the body. Line up the plunger's index tabs with the spaces in the body bore for ease of installation.
(5) Install O-ring (1) onto the guide spool. Then install the guide spool over the plunger and into the body. Press the guide spool into place firmly.
(6) Place the cover onto the body and secure with its four screws. Torque to 35 in. lbs.
(7) Thread the button clockwise onto the plunger stem. It should take approximately 3 full button revolutions to install it on the plunger. The protrusions on the side of the plunger should line up with the button

grooves. Push on the button a number of times to make sure the plunger moves freely throughout its range of motion.

**NOTICE**
**Before placing the vehicle back into service, perform the "leakage and operational tests" in this manual.**

If the PP-DC fails to function as described, or if leakage is excessive, repair the valve or replace it at the nearest authorized Bendix Commercial Vehicle Systems parts outlet.

**9. IMPORTANT! PLEASE READ**

When working on or around a vehicle, observe the following general precautions.

(1) Park the vehicle on a level surface, apply the parking brakes, and always block the wheels.
(2) Stop the engine when working around the vehicle.
(3) Drain the air pressure from all reservoirs before beginning ANY work on the vehicle.
(4) When working in the engine compartment the engine should be shut off. Where circumstances require that the engine be in operation, EXTREME CAUTION should be used to prevent personal injury resulting from contact with moving, rotating, leaking, heated, or electrically charged components.
(5) Never connect or disconnect a hose or line containing pressure; it may whip.
(6) Never remove a component or plug unless you are certain all system pressure has been depleted.
(7) Never exceed recommended pressures and always wear safety glasses.
(8) Do not attempt to install, remove, disassemble or assemble a component until you have read and thoroughly understand the recommended procedures. Use only the proper tools and observe all precautions pertaining to the use of those tools.
(9) Use only genuine Bendix replacement parts, components and kits. Replacement hardware, tubing, hose, fittings, etc. should be of equivalent size, type and strength as original equipment and should be designed specifically for such applications and systems.
(10) Components with stripped threads or damaged parts should be replaced rather than repaired. Repairs requiring machining or welding should not be attempted unless specifically approved and stated by the vehicle or component manufacturer.

# BRAKE CHAMBER (FRONT)

## DATA AND SPECIFICATIONS

EN06Z0802I200004

| | |
|---|---|
| **P/N Series** | **423 105 0110** |
| **Model** | **Type 20** |
| **Size** | **20** |
| **Stroke** | **2.5"** |
| **Part Number** | **423 105 0110** |
| **Wt. (lbs.)** | **6.615** |
| **A** | **4.17"** |
| **B** | **3.96"** |
| **C** | **6.89"** |
| **D** | **4.75"** |
| **E** | **5/8"-11UNC** |
| **Inlets** | **3/8"-NPTF** |
| **X-Min. (in the caged position)** | **2.25"** |

## DESCRIPTION

EN06Z0802C100007

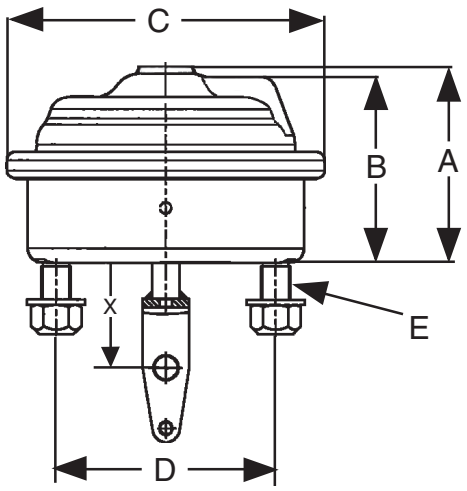


SAPH06Z080200024

# COMPONENT LOCATOR

EN06Z0802D100004

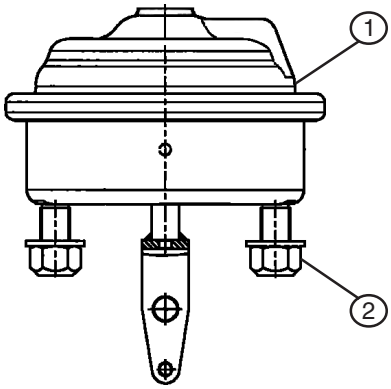


SAPH06Z080200025

| | |
|---|---|
| 1 Brake Chamber Assembly | 2 Kit - Nuts & Washers |

# OVERHAUL

EN06Z0802H200006

## IMPORTANT POINT-DISMOUNTING

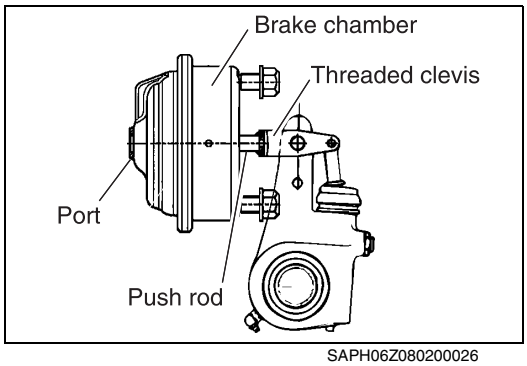


SAPH06Z080200026

### 1. DISMOUNTING OF THE BRAKE CHAMBER

(1) Before dismounting, apply a position mark "R" or "L" to identify the side where the chamber was installed.

## IMPORTANT POINTS-ASSEMBLY

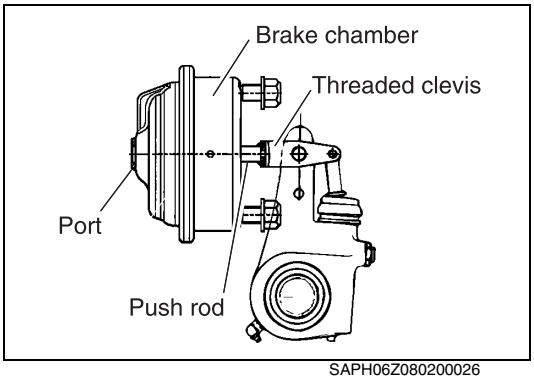

SAPH06Z080200026

**1. INSTALLING CLEVIS**

(1) Install the clevis to the push rod.

## IMPORTANT POINT-MOUNTING

**1. INSTALLING THE BRAKE CHAMBER**

(1) The chamber must be mounted on the side a s marked when dismounting.

**NOTICE**

- **See the position mark ("R" or "L") which was applied when dismounting.**
- **When connecting the clevis with the slack adjuster, lubricate the clevis pin hole and clevis pin with sufficient chassis grease.**

# BRAKE CHAMBER (REAR)

## DATA AND SPECIFICATIONS

EN06Z0802I200005

| Type | Diaphragm type |
|---|---|

| | |
|---|---|
| P/N Series | 3430 |
| Model | TR3030 |
| Size | 3030 |
| Stroke | 2.50" |
| P/N Combination | 3430051 |
| P/N Single/Piggyback | 3430001 |
| P/N Piggyback Plus Kit | 3430008 |
| Wt. Combination (lbs.) | 20.0 |
| Wt. Single (lbs.) | 11.6 |
| A | 9.04 |
| B | 6.66 |
| C | 8.31 |
| D | 8.21 |
| E | 4.75" |
| F | 5/8" - 11UNC |
| G | 5/8" - 18UNF |
| Inlets | 3/8" - NPTF |
| X - Min. (in the caged position) | 8.00" (b) |

# DESCRIPTION

EN06Z0802C100008

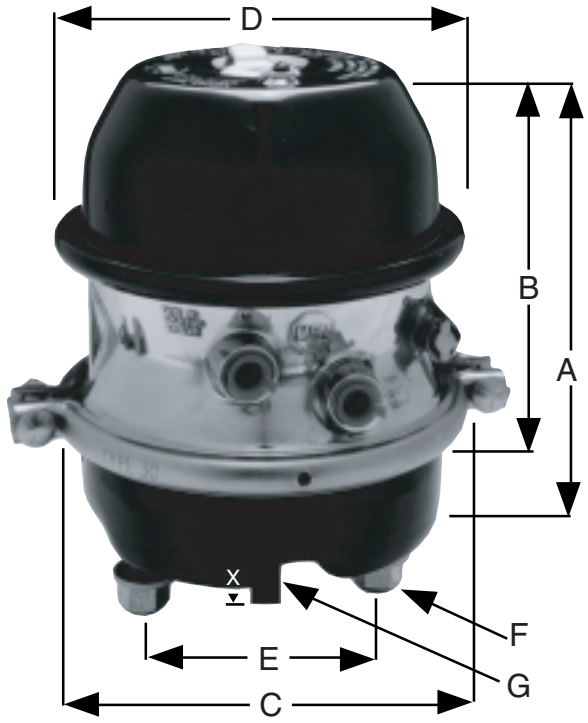


SAPH06Z080200028

# COMPONENT LOCATOR

EN06Z0802D100005

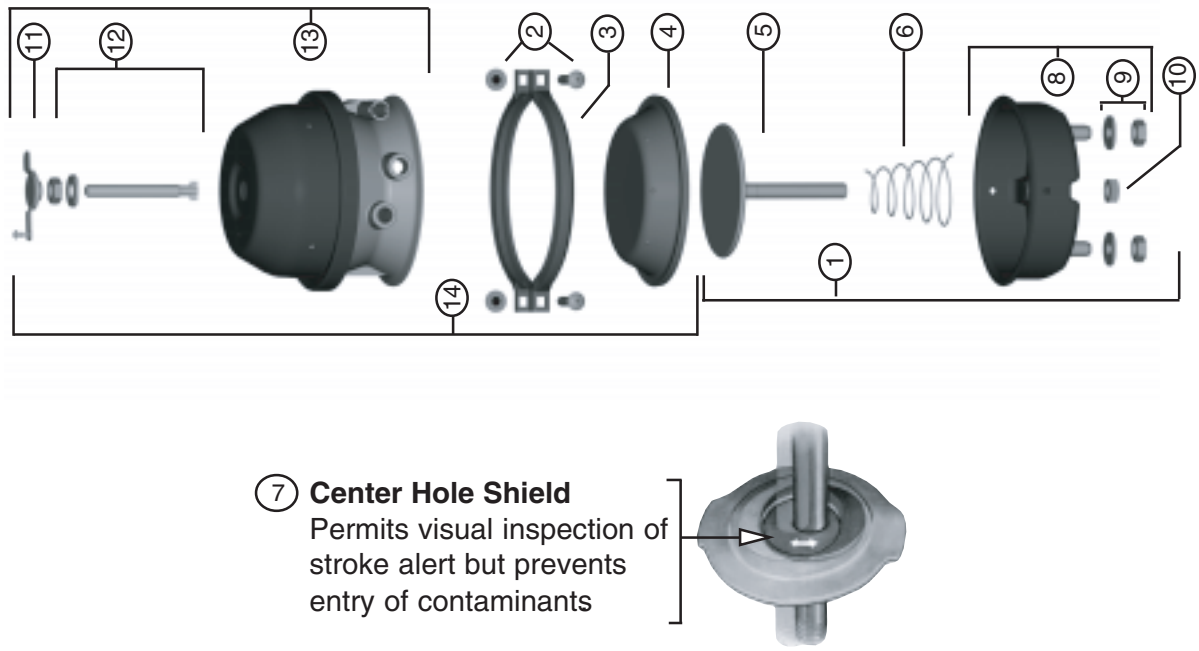


SAPH06Z080200029

| | | | |
|---|---|---|---|
| 1 | Kit-NP Chamber (b) | 8 | NP Chamber Assembly |
| 2 | Kit-Nuts & Bolts | 9 | Kit-Nuts & Washers |
| 3 | Clamp Band Assembly | 10 | Hex Nut - Yoke |
| 4 | Diaphragm | 11 | Kit-Weatherseal™ Plug |
| 5 | Kit-Push-Rod Assembly (b) | 12 | Kit-Release Bolt |
| 6 | Return Spring | 13 | Piggyback |
| 7 | Kit-Center Hole Shield | 14 | Kit-Piggyback Plus |



**Model “TR” Series**

SAPH06Z080200030

# INSPECTION AND REPAIR

EN06Z0802H300002

**⚠ CAUTION**
**The MGM Brakes Tamper Resistant spring brake chambers are an important part of your braking system. While they do not require scheduled servicing, it is good preventative maintenance to make the following routine inspections while they are in the shop for regular servicing of other components or at a minimum of every 50,000 miles.**

**⚠ WARNING**
**Your MGM brakes tamper resistant spring brake has been factory sealed for your protection. There are no user-serviceable parts inside the spring brake chamber. If you experience any damage or failure of your spring brake chamber, remove either the entire actuator as in section (3) of this manual, or the single (piggyback) as in section (5) of this manual. See section (8) of this manual for disposal instructions. Never attempt to disassemble the spring brake chamber as serious personal injury could result from accidental sudden release of the high energy spring.**

## 1. RECOMMENDED INSPECTION POINTS

(1) The plastic END CAP on all "TR" and "TR-T" models requires no positioning or maintenance, but must be snapped tightly into place. Inspect the cap for damage and replace as necessary. "TR-T" units equipped with a breather tube and the white WEATHER SEAL END CAP must be equipped with a rubber O-ring to ensure proper sealing of the spring chamber. **Operating units equipped with the BREATHER TUBE without the END CAP or DUST CAP securely in place will void the MGM Brakes warranty without remedy**.

(2) Visually inspect the exterior surfaces of the unit for signs of damage from outside sources, corrosion and/or rust. If any of these are seen or suspected, cautiously remove the complete combination chamber by following the directions in Section 3 on page BR02-50 of this manual. Per CVSA out of service criteria any non-manufactured hole or crack will place the vehicle out of service. (Not Shown)

(3) Inspect SERVICE BRAKE CLAMP RING to be sure it is securely in place and damage free. If any damage is seen or suspected, cautiously remove the complete piggyback/spring brake chamber by following directions in Section 5 on page BR02-53 of this manual. **MGM Brakes recommends 30-35 Lbs.-Ft. torque on CLAMP BOLTS.**

(4) Check to ensure the MOUNTING STUD NUTS are tightened to **133-155 Lbs.-Ft. torque (clockwise)** and washers are in place between the nut and bracket.

(5) Inspect air lines, hoses and fittings attached to chamber. Replace any damaged or leaking parts. **MGM Brakes recommends the fittings be tightened to 25-30 Lbs.-Ft. torque into the chamber air inlet ports**.

**IMPORTANT**
**Inspect the air ports to determine the model of brake. Round ports denote (2.50 inch) standard stroke model, square ports denote (3.00 inch) long stroke model. This information is important when replacing the service diaphragm and determining the chamber's rated stroke.**

(6) Inspect the PUSH-ROD to be sure it is working free, not bent, not binding and is square to the chamber bottom within ±3° in any direction at any point in the stroke of the chamber. If the PUSH-ROD is not square, make corrections by repositioning the chamber on the mounting bracket and/or by shimming the slack adjuster to the right or left on the camshaft as required.

(7) Inspect the YOKE ASSEMBLY being sure YOKE PIN is installed and locked into place with a COTTER PIN. Replace any damaged, worn or missing parts. **MGM Brakes recommends the YOKE LOCKNUT be tightened to 25-50 Lbs.-Ft. torque**. (Not Shown)

(8) On units equipped with a DUST BOOT, check the BOOT for damage and replace as necessary. (Not Shown).

(9) On units equipped with an external BREATHERTUBE be sure both ends of the connector tube are engaged a minimum of 1/2-inch into each of the flexible elbows. The tube must be glued to both of the elbows with a high quality rubber adhesive or secured with a clamp that may be purchased with the MGM Brakes BREATHER TUBE KIT. These units must be mounted with the BREATHER TUBE in the upper half of the non-pressure chamber facing away from the road surface.

**IMPORTANT:** Failure to operate any MGM Brakes Model Series "TR-T" or "TR-TS" chamber without the EXTERNAL BREATHER TUBE and END CAP with O-ring being present and in good condition will void the MGM Brakes Warranty without remedy.

**2. MANUAL RELEASE-PARKING BRAKES**

(1) Before releasing the parking brakes, chock wheels of the vehicle to prevent a vehicle movement.

(2) Remove the plastic end cap from the spring brake chamber.



SAPH06Z080200031

(3) Using a 3/4 inch wrench, unscrew the release-nut and remove the nut, flat washer, and release-bolt from their storage pocket on side of chamber for all "TR" series brakes.

**IMPORTANT**
**If these parts are not stored on the chamber, they must be obtained from vehicle tool box or service department, as the piggyback/spring brake cannot be manually released without them.**



SAPH06Z080200032

(4) Insert the release-bolt into the center hole of the head and, being sure that the formed end of the bolt has entered the hole in the piston inside the chamber, continue to insert the bolt until it reaches the bottom.

**IMPORTANT**
**If you are not absolutely sure of correct bolt-to-piston engagement, repeat 1. (4) until you are sure.**



SAPH06Z080200033

(5) Turn the release-bolt 1/4 turn clockwise and pull the bolt out to lock the formed end into the piston.

**IMPORTANT**
**If the bolt does not lock into the piston in less than 1/2 inch outward movement, repeat 1. (4) and (5) until you are sure it does lock.**

(6) Holding the bolt locked into the piston, install the flat washer and the release nut on the end of the release-bolt, and turn down the nut against the flat washer until finger tight.



SAPH06Z080200034

(7) Using a 3/4 inch hand wrench (**DO NOT USE AN IMPACT WRENCH**) turn the release-nut clockwise until the following length of bolt extends above the nut.
3.25 inch-Type 3030 Chamber

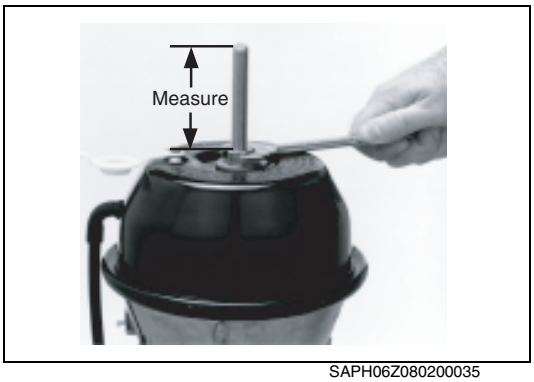


SAPH06Z080200035

**⚠ WARNING**
**Do not exceed these lengths and do not exceed 50 lbs.-ft. torque on release nut at any time or damage may occur which could prevent any future correct manual-releasing of the piggyback spring brake chamber.**

**NOTICE**

- **For easier manual-releasing, apply 90-125 psi air pressure to inlet port marked "SPRING BRAKE" before 1. (4) above, but be sure to exhaust all air pressure after 1. (7) is completed.**
- **To reactivate the piggyback/spring brake from its manually-released position, reverse the order of 1. (1)-(7) above.**
- **When re-installing the release-bolt, flat washer and release-nut into the storage pocket, MGM Brakes recommends 10 Lbs.-Ft. torque on nut against the flat washer.**

**3. REMOVAL AND INSTALLATION INSTRUCTIONS FOR "COMBINATION CHAMBERS"**

**NOTICE**
**Before removing air brake chamber to be replaced to ensure that the brake chamber being replaced was properly installed with the correct rod length.**

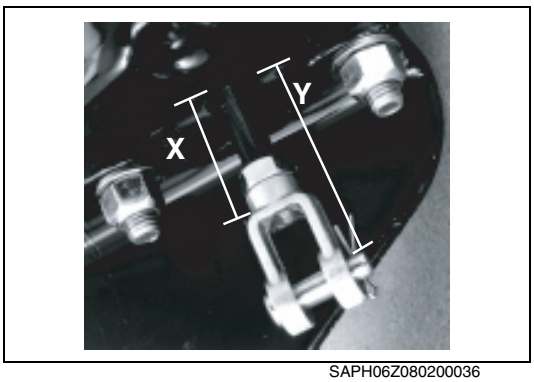


SAPH06Z080200036

(1) Determine the manufacturer of the single (piggyback) spring brake or combination chamber to be removed from the vehicle and, following that manufacturer's instructions exactly, manually release the spring brake completely. (Instructions for all MGM Brakes Model Series "TR", "TR-T" and single (piggyback) spring brakes having removable bolts are given in Section 2 on page BR02-49 of this manual. (Service Manuals for all other design series of MGM Brakes piggyback spring brakes are also available upon request to MGM Brakes.)

(2) Remove the cotter pin from the yoke pin, knock out the yoke pin, and remove both air lines from the assembly.

**IMPORTANT**
**Be sure to mark the air line from the inlet port marked "SPRING BRAKE" for later re-installation reference.**

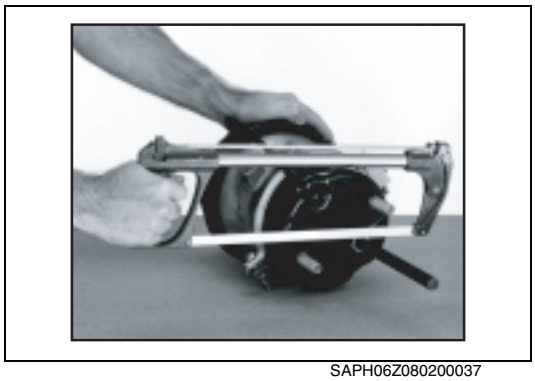

SAPH06Z080200037

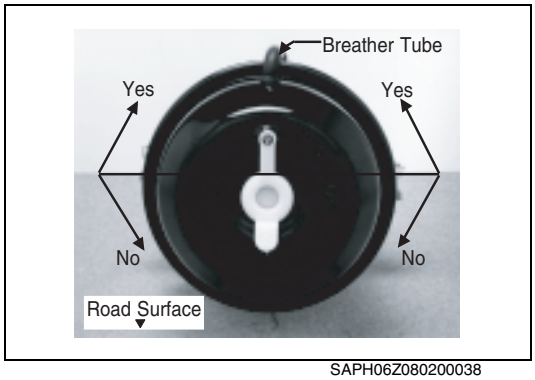


SAPH06Z080200038

(3) Using a 15/16 inch wrench, unscrew hex nuts on mounting bolts and cautiously remove the old chamber from the mounting bracket.

(4) **Cut the service push-rod to proper length.**

(5) Remove the hex nut and the flat washers on the mounting bolts of the new chamber, clean the face of the mounting bracket and install the chamber on the bracket with close attention given to positioning the chamber air inlet ports for correct alignment to the vehicle lines. Then install one flat washer and hex nut on each mounting bolt and using a 15/16 inch hand wrench **(DO NOT USE AN IMPACT WRENCH)**, tighten nuts to **MGM Brakes recommended 133-155 Lbs-Ft. torque**.

**IMPORTANT**

- **If it is required to reposition the air inlet ports to assure proper mating and alignment with vehicle air lines, refer to Section 5 on page BR02-54 and 55 of this manual and follow Steps (3) through (6) very carefully.**
- **When installing any MGM Brakes model with the breather tube it is mandatory to position the non-pressure chamber end of the breather tube in upper half of chamber facing away from the road surface. Failure to comply will void the MGM Brakes Warranty on these models.**

(6) Reconnect yoke to the slack adjuster, being sure that the correct diameter and length of yoke pin is installed into the correct hole in the slack adjuster. Secure the yoke pin with a new cotter pin.
**IMPORTANT:** When making a reconnection to an automatic slack adjuster follow the vehicle manufacturer's recommendations for installation and set-up.

(7) Inspect the push-rod to be sure that it is working free, not bent, not binding an is square to the chamber bottom within ±3° in any direction at any point in the stroke of the chamber. If the push-rod is not square, make corrections by repositioning the chamber on the mounting bracket and/or by shimming the slack adjuster to the right or left on the camshaft as required.

(8) Apply a non-hardening sealing compound to the hose fittings and re-install both of the air lines to the chamber being sure each is mated to the correct air inlet port according to the markings made earlier. **MGM Brakes recommends the fittings be tightened to 25-30 Lbs.-Ft. torque into the chamber air-inlet ports**.

(9) Using the vehicle system air, charge the spring brake with full line pressure (minimum 100 psi). Spray only soapy water or leak detection solution (NEVER ANY TYPE OF OIL!) to the air line fittings and inspect for air leaks. If bubbles appear, tighten fittings slightly, but not over 30 Lbs.-Ft. torque.
**IMPORTANT:** If the service brake clamp ring was loosened to reposition air inlet ports in Step (5) above, apply air to the spring brake and then apply and hold foot brake treadle valve down to charge the service brake chamber. Test for air leaks around the circumference of the service clamp ring using soapy water or leak detection solution. If bubbles appear, firmly tap the circumference of the clamp ring with a hammer and retighten the clamp nuts until leaks cease. **MGM Brakes recommends 30-35 Lbs-Ft. torque on clamp hex nuts.** Completely exhaust air from both of the chambers when complete.

(10) With air pressure now exhausted from the service chamber, but still applied on the spring brake, remove release-nut, washer and release-bolt for all "TR" models. Replace these parts in their storage pocket on chamber (or in vehicle tool box if storage pocket is not present on chamber) and tighten nut against flat washer to 10 Lbs.-Ft. torque.

(11) Replace the END CAP properly. **Operating units equipped with the EXTERNAL BREATHER TUBE without the END CAP and O-RING**

**securely in place will void the MGM Brakes Warranty without remedy**.

**IMPORTANT:** If chamber is fitted with an external breather tube be sure both ends of the connector tube are engaged a minimum of 1/2 inch into each of the flexible elbows. The tube must be glued to both of the elbows with a high quality rubber adhesive or secured with a clamp that may be purchased with the MGM Brakes Breather Tube Kit. These units must be mounted with the BREATHER TUBE in the upper half of the non-pressure chamber facing away from the road surface.

**⚠ WARNING**

**After replacement of any brake chamber, the chamber pushrod stroke and actuating alignment must be checked to assure correct installation and foundation brake adjustment. It is very important to recognize that no foundation adjustments can be made at either the spring brake chamber, or at the service brake chamber, and that all "stroke adjustments" must be made at the slack adjuster according to the specific recommendations of the foundation brake manufacturer or the vehicle manufacturer.**

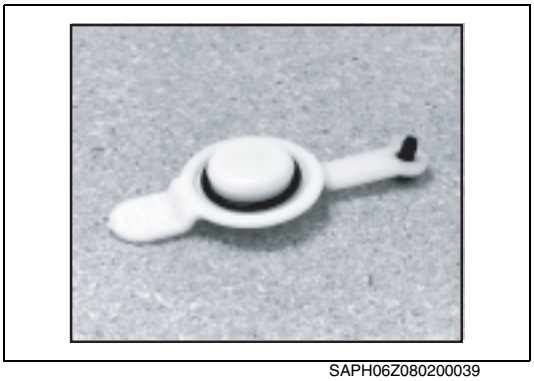

SAPH06Z080200039

**4. PROCEDURE TO CUT THE SERVICE PUSH-ROD TO PROPER LENGTH**

**⚠ WARNING**

**Do not attempt to service or disassemble the spring chamber or any spring brake actuator. A large spring in the spring chamber having extreme force could cause serious bodily injury if it were suddenly released due to inadvertent removal of this clamp or tamper resistant head.**

**IMPORTANT:** Place blocks under wheels to prevent vehicle runaway before removing air brake actuators.

(1) REMOVE WORN OR NON-FUNCTIONAL UNIT FROM VEHICLE: Determine manufacturer and model of unit to be replaced. Refer to that manufacturer's service manual for caging and removal instructions.



SAPH06Z080200040

(2) Make sure the spring chamber of the removed actuator is fully released (power spring caged) and the service brake push-rod is fully retracted to zero stroke position (i.e., brake fully released).

(3) Measure and record the "X" and "Y" dimensions.
"X" Dimension - The dimension from bottom of actuator to end of push-rod. "Y" Dimension - The dimension from bottom of actuator to center line of yoke pin.

**NOTICE**
**If for some reason the spring chamber power spring cannot be caged and fully released, then the "X" and "Y" dimensions will need to be measured from another actuator of the exact type from the same vehicle provided it is retracted to its zero stroke position (brake fully released) and was operating correctly.**

(4) Before marking push-rod to be cut on a new unit, be sure the spring chamber and push-rod are fully retracted to the zero position. (This may be done with the manual caging bolt or by applying 90-100 psi air pressure to the spring chamber air inlet port.)
(5) Take measured "X" dimension from the removed unit and mark push-rod of new unit from the bottom of the actuator.
(6) Thread yoke jam nut past mark on push-rod. Align bottom edge of nut with mark.
(7) Use a sharp hack-saw and cut push-rod on the mark.
(8) After cutting rod, thread jam nut off to clean up the thread.
(9) Thread jam nut back onto the push-rod a sufficient length to allow assembly of the yoke.
(10) Thread yoke onto the push-rod. Yoke from removed unit may be reused provided yoke pin hole is not worn. Adjust yoke to the same "Y" dimension as measured from the removed unit.
(11) Hold yoke to prevent it from turning and tighten locknut against yoke 25-35 Lbs.-Ft. torque.

TO INSTALL NEW UNIT ON VEHICLE: Refer to MGM Brakes Service Manual for the model that is being installed.



SAPH06Z080200041

**5. REMOVAL AND INSTALLATION INSTRUCTIONS FOR SINGLE (PIGGYBACK) SPRING BRAKES**

The removal and installation of a single spring brake chamber (without removal of the service brake chamber) can be made easier by "locking off" the service chamber piston. To do this apply the service brake by applying the driver's foot brake treadle valve and, while applied, clamp vise-grip pliers on push-rod so that vice-grips abut mounting bracket to prevent rod from retracting when air pressure is released.

(1) Determine manufacturer of the single spring brake to be removed from the vehicle and, following that manufacturer's instructions exactly, manually release the spring brake completely. (Instructions for all MGM Brakes Model Series "TR", "TR-T" and single spring brakes having removable release bolts are given in Section 2 on page BR02-49 of this manual.) (Service Manuals for all other design series of MGM Brakes single spring brakes are also available upon request to MGM Brakes.)
(2) Remove both air lines from the chamber.

**IMPORTANT**
**Be sure to mark the air line from the inlet port marked "SPRING BRAKE" for later re-installation reference.**

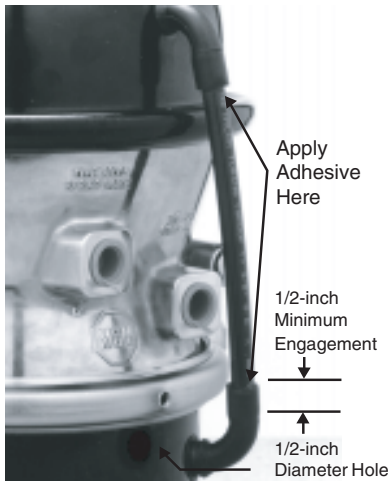


SAPH06Z080200042

(3) On all MGM Brakes models fitted with external breather tubes, disconnect the tube and elbow from the service chamber housing.



SAPH06Z080200043

(4) Using a 9/16 inch wrench or socket, remove the clamp nuts on the service clamp ring. Then, while holding the single spring brake securely in place, remove the clamp ring to allow removal of the single brake from the service chamber.

**IMPORTANT**
**At this time take the opportunity to inspect all parts in the service chamber (especially the diaphragm) and replace the return spring, and any other parts which may be damaged or worn. Use only genuine MGM Brakes Engineered replacement parts!**



SAPH06Z080200044

(5) Make sure the new single (piggyback) spring brake is fully released as outlined in Section 2 on page BR02-49 of this manual. Position the diaphragm in the bottom recess of the chamber and, with very close attention taken to assure all mating parts are aligned straight and the air lines are positioned to mate with the vehicle air supply lines, replace the service clamp ring.

(6) Re-install the clamp bolts and nuts. **Alternately tighten each nut in 5-10 Lbs.-Ft. torque increments** while constantly rechecking mating parts alignment. (If re-alignment is required, loosen clamp nuts and repeat Step (5) above). Firmly tap around circumference of the clamp ring with a hammer to assure the full seating of the clamp and **tighten the nuts to 30-35 Lbs-Ft. torque**.

(7) Apply a non-hardening sealing compound to the hose fittings and re-install both of the air lines to the chamber, being sure each is mated to the correct air inlet port according to the markings made earlier. **MGM Brakes recommends the fittings be tightened to 25-30 Lbs.-Ft. torque into the chamber air inlet ports.**

(8) Using the vehicle system air, charge the spring brake with full line pressure (minimum 100 psi). Spray only soapy water or leak detection solution (NEVER ANY TYPE OF OIL!) to the air line fittings and inspect for air leaks. **If bubbles appear, tighten fittings slightly, but not over 30 Lbs.-Ft. torque.**

(9) With the spring brake still fully charged with full line pressure, apply and hold foot brake treadle valve down to charge the service brake chamber.

**IMPORTANT**

**At this time, remove the vise-grip pliers from the service push-rod so that the piston can return to a normal position in the chamber. Now test for air leaks around the circumference of the service clamp ring by spraying with soapy water or leak detection solution. If bubbles appear, firmly tap the circumference of the clamp ring with a hammer and retighten the clamp nuts until leaks cease. MGM Brakes recommends 30-35 Lbs.-Ft. torque on the clamp hex nuts.**

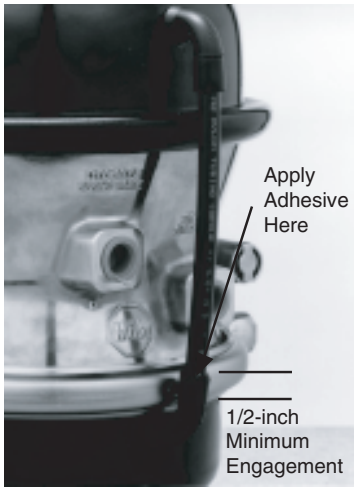


SAPH06Z080200045

(10) On all MGM Brakes models fitted with an EXTERNAL BREATHER TUBE, wipe the open end of the connector tube clean to be sure that no oil is present, apply a high quality rubber cement to the tube and re-insert tube into flexible elbow a minimum 1/2 inch engagement.

If the old single unit was not equipped with an EXTERNAL BREATHER TUBE, drill a 1/2 inch diameter hole 1 inch from the top of the non-pressure chamber, at a point closest to the center line between the air ports, but in the upper half of the chamber facing away from the road surface. Remove any burrs around the hole, install a new rubber elbow in the non-pressure chamber, wipe the open end of connector tube clean to be sure no oil is present. Apply a high quality rubber cement to the tube and insert the tube into the flexible elbow with a minimum 1/2 inch engagement.

**IMPORTANT**

**These units must be mounted with the BREATHER TUBE in the upper half of the non-pressure chamber facing away from the road surface and the tube glued or clamped securely into the rubber elbows. Failure to comply with these installation instructions will void the MGM Brakes Warranty without remedy.**

(11) With air pressure exhausted from the service chamber, but with line pressure still on the spring brake, remove the release nut, washer and bolt for all "TR" models. Replace these parts in their storage pocket on the chamber (or in the vehicle tool box if a storage pocket is not on the chamber) and **tighten the nut against the flat washer to 10 Lbs.-Ft. torque**.

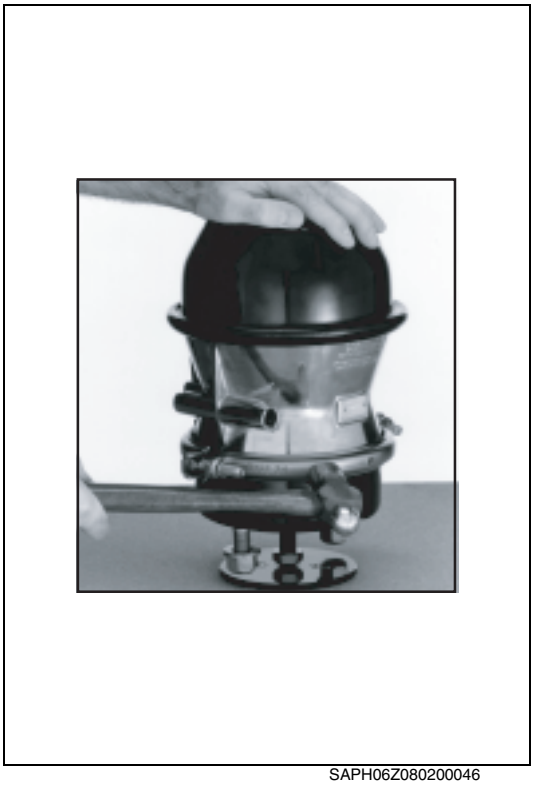

SAPH06Z080200046

(12) Replace the end cap properly. Operating these units without the END CAP securely in place will void the MGM Brakes Warranty without remedy.

**6. REMOVAL AND INSTALLATION INSTRUCTIONS FOR "SERVICE BRAKE DIAPHRAGM"**

(1) Follow all instructions given in Section 5 of this manual and install the new diaphragm in Step 5-(5). Use only genuine MGM Brakes Engineered replacement diaphragms!

**⚠ WARNING**
**When servicing a 3-inch "long stroke" model brake, be sure to replace with the correct diaphragm. Installation of a standard (2.50 inch) stroke diaphragm in a 3-inch "long stroke" chamber could result in catastrophic failure of the unit.**

**IMPORTANT:** It may not be necessary to disconnect the air lines from the spring brake during this procedure as long as correct and straight parts alignment can be obtained during the re-assembly operations.

## 7. CAM BRAKE ADJUSTMENT - ALL MODELS SPRING BRAKE AND SERVICE BRAKE ACTUATORS.

**NOTICE**

**The last half of an air chamber stroke is less efficient than the first half. Therefore, the following adjustments are recommended for maximum efficiency when using manually adjusted slack adjusters.**

### BRAKES "OFF" - NOT APPLIED

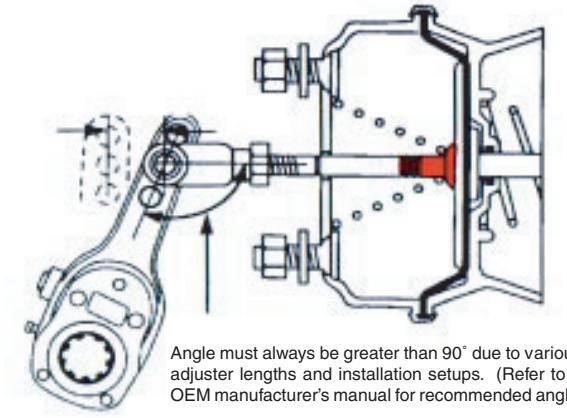

Angle must always be greater than 90˚ due to various slack adjuster lengths and installation setups. (Refer to axle or OEM manufacturer's manual for recommended angle).

Stroke should be as short as possible with no lining to drum contact.

### PROPERLY - ADJUSTED BRAKES "ON" - APPLIED

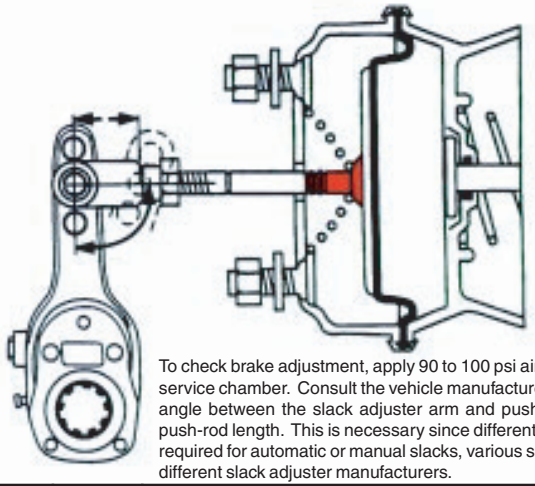

To check brake adjustment, apply 90 to 100 psi air pressure to the service chamber. Consult the vehicle manufacturer for the correct angle between the slack adjuster arm and push-rod and/or the push-rod length. This is necessary since different dimensions are required for automatic or manual slacks, various slack lengths and different slack adjuster manufacturers.

### IMPROPERLY ADJUSTED BRAKES "ON" - APPLIED

(Maximum recommended readjustment stroke has been exceeded)

MGM Brakes "Stroke Alert" (Excessive Stroke Warning)

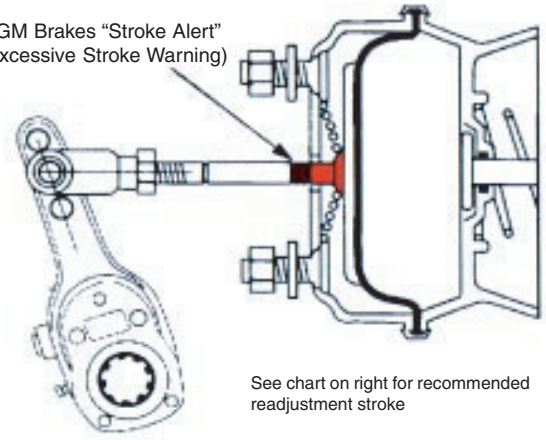

See chart on right for recommended readjustment stroke

| Type | Effective Area (SQ. IN.) | Approx. Diaphragm O.D. | | Rated Stroke of Chamber | | Maximum Stroke with Brakes Adjusted | "B" MV/MA Recommended Readjustment Stroke | |
|---|---|---|---|---|---|---|---|---|
| | | Inches | MM | Inches | MM | | Inches | MM |
| 9 | 9 | 5.00 | 125 | 1.75 | 45 | SHOULD BE AS SHORT AS POSSIBLE WITHOUT LINING TO DRUM CONTACT | 1.35 | 35 |
| 12 | 12 | 5.50 | 140 | 1.75 | 45 | | 1.35 | 35 |
| 16 | 16 | 6.00 | 150 | 2.25 | 57 | | 1.75 | 45 |
| 16L | 16 | 6.00 | 150 | 2.50 | 64 | | 2.00 | 51 |
| 20 | 20 | 6.50 | 165 | 2.25 | 57 | | 1.75 | 45 |
| 20L | 20 | 6.50 | 165 | 2.50 | 64 | | 2.00 | 51 |
| 24 | 24 | 7.00 | 175 | 2.25 | 57 | | 1.75 | 45 |
| 24L | 24 | 7.00 | 175 | 2.50 | 64 | | 2.00 | 51 |
| 24LP3 | 24 | 7.00 | 175 | 3.00 | 76 | | 2.50 | 64 |
| 30 | 30 | 8.00 | 200 | 2.50 | 64 | | 2.00 | 51 |
| 30LP3 | 30 | 8.00 | 200 | 3.00 | 76 | | 2.50 | 64 |
| 36 | 36 | 9.00 | 230 | 3.00 | 76 | | 2.25 | 57 |

**SOURCE:** MVMA (Motor Vehicle Manufacturers Association)

**Note:** The push-rod must remain perpendicular to the bottom surface of the non-pressure chamber (NPC) within ±3˚ zero to full stroke.

SAPH06Z080200047

**8. RECOMMENDED SPRING BRAKE ACTUATOR DISARMING PROCEDURE**

**⚠ WARNING**

- **This procedure must be strictly adhered to. never attempt to remove the spring chamber clamp ring from a double diaphragm actuator or the spring chamber retaining ring from a piston actuator. both actuators employ a high energy power spring that could cause serious bodily injury if the spring were suddenly released due to improper disassembly.**

  **All retired spring brake actuators must be safely disarmed before they are disposed of to prevent serious personal injury from accidental sudden release of the high energy spring (as much as 2,700 Lbs. of force) in the parking chamber. To disarm the unit, remove it from the vehicle following the instructions in Section 3 on page BR02-50 for combination chambers, or Section 5 on page BR02-53 for single/piggyback chambers. Be sure to release the brake per Section 2 on page BR02-49 of this manual. Never attempt to remove the head which contains the power spring. Observe all safety precautions. Place the unit in a steel *container and use an acetylene torch to cut a hole through the head housing the power spring. Cut completely through at least two spring coils. The steel container must have openings to expose the head where it is to be cut with the acetylene torch and it must be strong enough to prevent parts from hurtling out should the unit suddenly separate before it is safely disarmed. It is the users responsibility to ensure the steel container is safe.**

  ***Information concerning a suitable container is available through your MGM Brakes Representative.**

# PROTECTION VALVE

## DATA AND SPECIFICATIONS

EN06Z0802I200006

| | | |
|---|---|---|
| **Type** | | **Spring type** |
| **Operating pressure** | **Close** | **70 PSI** |

## DESCRIPTION

EN06Z0802C100009

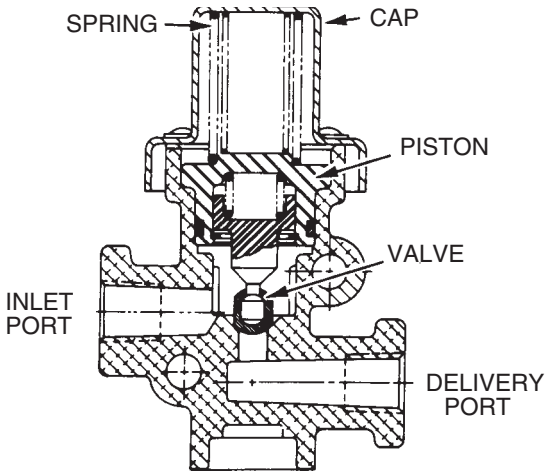


PR-4

SAPH06Z080200048

# INSPECTION

EN06Z0802H200007

**1. PREVENTIVE MAINTENANCE**

Every 3 months, 900 operating hours or 25,000 miles, whichever if first, it is recommended that the operation and leakage checks described in this manual be performed.

**2. OPERATING CHECKS**

(1) Provide a pressure gauge and drain valve at the supply side and delivery side of the pressure protection valve being checked.
(2) Build up the air system to full pressure and shut off the engine.
(3) While watching the gauges on the supply and delivery sides of the valve, slowly begin to exhaust pressure from the delivery side. Note that both gauges will show pressure loss until the closing pressure of the pressure protection valve is reached.
The pressure protection valve should close at approximately (±5 psi) the pressure indicated on the valve's label or in the vehicle handbook. The gauge on the delivery side of the valve should continue to show loss of pressure while the gauge on the supply side should stop at the same pressure as the setting of the valve.
(4) (PR-3 only) Build pressure up again and shut off engine. Slowly exhaust air from the supply side of the PR-3. The gauge on the delivery side of the valve should remain at the highest pressure previously attained.

**3. LEAKAGE CHECKS**

(1) Build up the air system to full pressure and shut off the engine.
(2) Apply a soap solution around the cap of the pressure protection valve. A one-inch bubble in three seconds or longer is acceptable. PR-3 - No leakage permissible at bottom of valve.
(3) Drain the air pressure from the delivery side of the pressure protection valve and disconnect the air line to it.
(4) Apply a soap solution to the delivery port. A one inch bubble in five seconds or more is acceptable.

**4. REMOVING**

(1) Block or hold the vehicle by means other than air brakes.
(2) Drain all system reservoirs individually, to 0 psi.
(3) Disconnect and identify (supply and delivery) the air lines leading to and from the pressure protection valve.
(4) Remove the mounting bolts, if any, that secure the valve.

**5. INSTALLING**

(1) Re-install the mounting bolts and secure the replacement valve to the vehicle.
(2) Reconnect the supply delivery air lines to the proper ports of the replacement valve.

**6. GENERAL**

After installing a replacement valve, it is recommended that the operating and leakage checks be performed as outlined in this manual. If the proper setting cannot be attained by moderate adjustment of the cap, the valve may have the wrong spring and will have to be exchanged for the correct valve. The PR-4 is not adjustable.

**7. WHEN WORKING ON OR AROUND A VEHICLE, THE FOLLOWING GENERAL PRECAUTIONS SHOULD BE OBSERVED AT ALL TIMES:**

**⚠ WARNING**
**Please read and follow these instructions to avoid personal injury or death.**

(1) Park the vehicle on a level surface, apply the parking brakes, and always block the wheels.
(2) Stop the engine when working around the vehicle.
(3) If the vehicle is equipped with air brakes, make certain to drain the air pressure from all reservoirs before beginning ANY work on the vehicle.
(4) Following the vehicle manufacturer's recommended procedures, deactivate the electrical system in a manner that removes all electrical power from the vehicle.
(5) When working in the engine compartment the engine should be shut off. Where circumstances require that the engine be in operation, EXTREME CAUTION should be used to prevent personal injury resulting from contact with moving, rotating, leaking, heated, or electrically charged components.
(6) Never connect or disconnect a hose or line containing pressure; it may whip. Never remove a component or plug unless you are certain all system pressure has been depleted.
(7) Never exceed recommended pressures and always wear safety glasses.
(8) Do not attempt to install, remove, disassemble or assemble a component until you have read and thoroughly understand the recommended procedures. Use only the proper tools and observe all precautions pertaining to use of those tools.
(9) Use only genuine Bendix replacement parts, components, and kits. Replacement hardware, tubing, hose, fittings, etc. should be of equivalent size, type, and strength as original equipment and be designed specifically for such applications and systems.
(10) Components with stripped threads or damaged parts should be replaced rather than repaired. Repairs requiring machining or welding should not be attempted unless specifically approved and stated by the vehicle or component manufacturer.
(11) Prior to returning the vehicle to service, make certain all components and systems are restored to their proper operating condition.

# WHEEL BRAKE

## DATA AND SPECIFICATIONS

EN06Z0802I200007

| | | |
|---|---|---|
| **Type** | | **Drum brake with internally expanding, leading-trailing shoes operated by camshaft and automatic slack adjuster in all wheels.** |
| **Brake drum inside diameter x lining width** | **Front** | **15 x 4 in. (381 x 102 mm), 16.5 x 5 in. (419 x 127 mm)** |
| | **Rear** | **16.5 x 7 in. (419 x 178 mm)** |
| **Brake drum inside diameter x lining width (Low floor type vehicle with full air brake)** | **Front** | **15 x 4 in. (381 x 102 mm)** |
| | **Rear** | **15 x 8.625 in. (381 x 219 mm)** |

# DESCRIPTION

EN06Z0802C100010

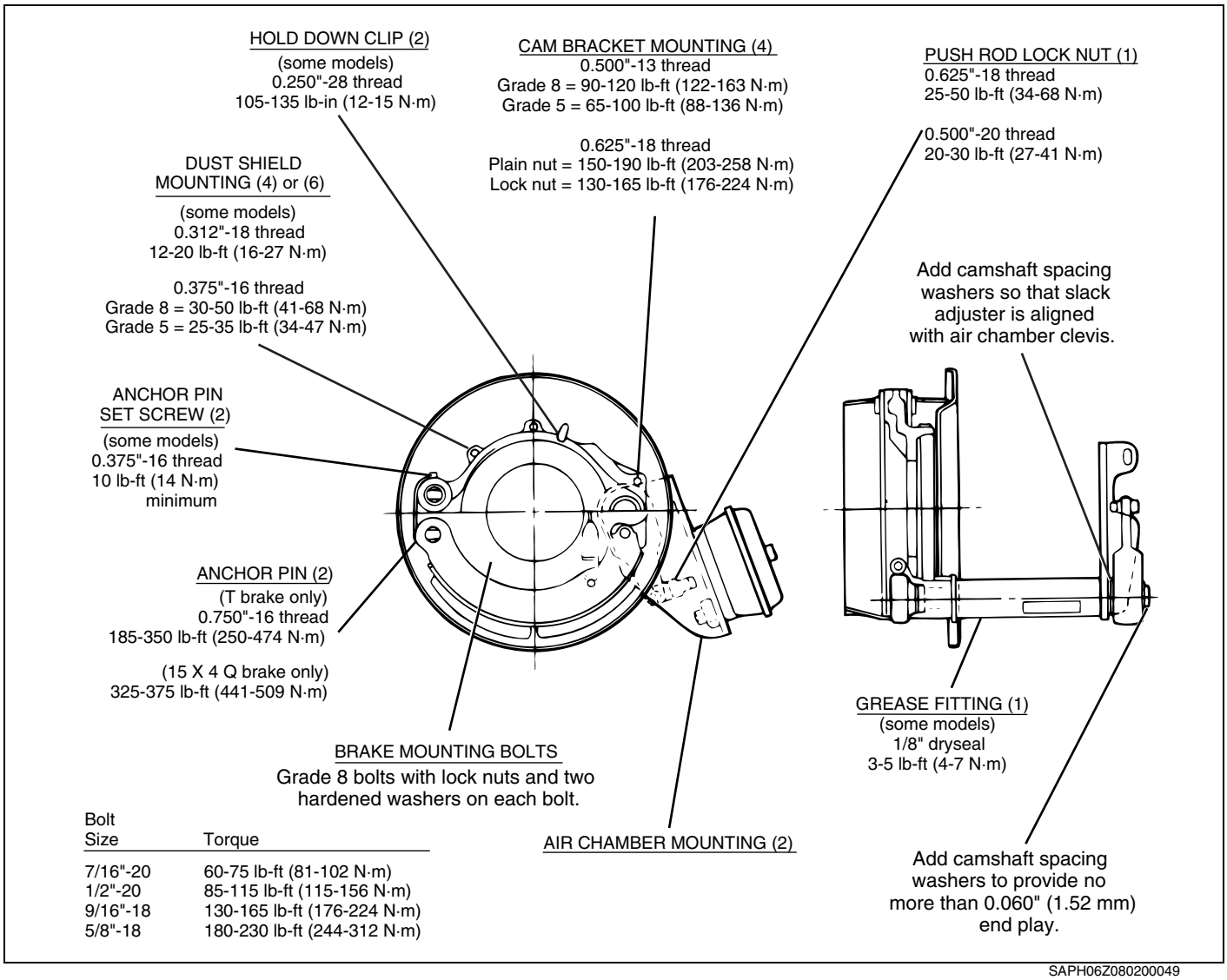


SAPH06Z080200049

| Grade 8 Nuts and Hard Flat Washers | | | | | | | | |
|---|---|---|---|---|---|---|---|---|
| **Chamber Size** | **9** | **12** | **16** | **20** | **24** | **30** | **36** | **Spring Chamber** |
| **Bendix** | **20-30 lb-ft (27-41 N·m)** | | **30-45 lb-ft (41-61 N·m)** | | | **45-65 lb-ft (61-88 N·m)** | | **65-85 lb-ft (88-115 N·m)** |
| **Haldex** | **35-50 lb-ft (48-68 N·m)** | | | **70-100 lb-ft (95-136 N·m)** | | | | |
| **MGM** | **35-40 lb-ft (48-54 N·m)** | | | **133-155 lb-ft (180-210 N·m)** | | | | |
| **Anchorlok/Haldex** | | | | **130-150 lb-ft (177-203 N·m)** | | | | |

# COMPONENT LOCATOR

EN06Z0802D100006

## FRONT

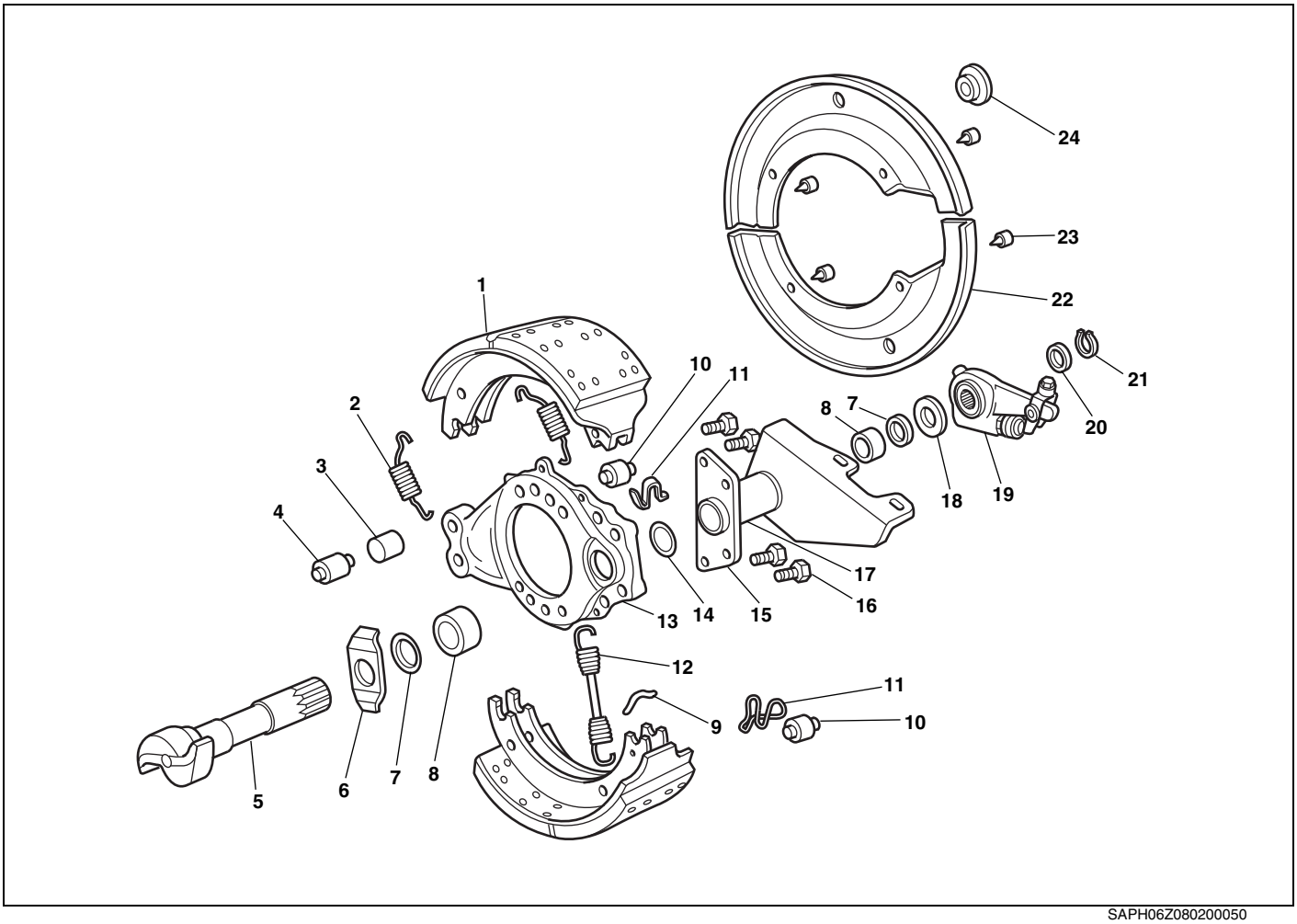


SAPH06Z080200050

| | | | |
|---|---|---|---|
| 1 | Shoe and Lining Assembly | 13 | Cast spider — brake |
| 2 | Spring — shoe retaining | 14 | Seal — chamber bracket |
| 3 | Bushing — anchor pin | 15 | Bracket — camshaft and chamber |
| 4 | Anchor Pin — brake shoe | 16 | Capscrew — chamber bracket |
| 5 | Camshaft — "S" head | 17 | Fitting — grease |
| 6 | Washer — camhead | 18 | Washer — camshaft (thick) |
| 7 | Seal — camshaft (grease) | 19 | Slack Adjuster — automatic |
| 8 | Bushing — camshaft | 20 | Washer — spacing |
| 9 | Pin — return spring | 21 | Snap Ring — camshaft |
| 10 | Roller — brake shoe | 22 | Dust Shield |
| 11 | Retainer — shoe roller | 23 | Capscrew — dust shield |
| 12 | Spring — brake shoe return | 24 | Plug |

## ASBESTOS FIBERS WARNING

***The following procedures for servicing brakes are recommended to reduce exposure to asbestos fiber dust, a cancer and lung disease hazard. Material Safety Data Sheets are available from ArvinMeritor.***

### Hazard Summary

Because some brake linings contain asbestos, workers who service brakes must understand the potential hazards of asbestos and precautions for reducing risks. Exposure to airborne asbestos dust can cause serious and possibly fatal diseases, including asbestosis (a chronic lung disease) and cancer, principally lung cancer and mesothelioma (a cancer of the lining of the chest or abdominal cavities). Some studies show that the risk of lung cancer among persons who smoke and who are exposed to asbestos is much greater than the risk for non-smokers. Symptoms of these diseases may not become apparent for 15, 20 or more years after the first exposure to asbestos.

Accordingly, workers must use caution to avoid creating and breathing dust when servicing brakes. Specific recommended work practices for reducing exposure to asbestos dust follow. Consult your employer for more details.

### Recommended Work Practices

1. Separate Work Areas. Whenever feasible, service brakes in a separate area away from other operations to reduce risks to unprotected persons. OSHA has set a maximum allowable level of exposure for asbestos of 0.1 f/cc as an 8-hour time-weighted average and 1.0 f/cc averaged over a 30-minute period. Scientists disagree, however, to what extent adherence to the maximum allowable exposure levels will eliminate the risk of disease that can result from inhaling asbestos dust. OSHA requires that the following sign be posted at the entrance to areas where exposures exceed either of the maximum allowable levels:

**DANGER: ASBESTOS**
**CANCER AND LUNG DISEASE HAZARD**
**AUTHORIZED PERSONNEL ONLY**
**RESPIRATORS AND PROTECTIVE CLOTHING**
**ARE REQUIRED IN THIS AREA.**

2. Respiratory Protection. Wear a respirator equipped with a high-efficiency (HEPA) filter approved by NIOSH or MSHA for use with asbestos at all times when servicing brakes, beginning with the removal of the wheels.

3. Procedures for Servicing Brakes.

a. Enclose the brake assembly within a negative pressure enclosure. The enclosure should be equipped with a HEPA vacuum and worker arm sleeves. With the enclosure in place, use the HEPA vacuum to loosen and vacuum residue from the brake parts.

b. As an alternative procedure, use a catch basin with water and a biodegradable, non-phosphate, water-based detergent to wash the brake drum or rotor and other brake parts. The solution should be applied with low pressure to prevent dust from becoming airborne. Allow the solution to flow between the brake drum and the brake support or the brake rotor and caliper. The wheel hub and brake assembly components should be thoroughly wetted to suppress dust before the brake shoes or brake pads are removed. Wipe the brake parts clean with a cloth.

c. If an enclosed vacuum system or brake washing equipment is not available, employers may adopt their own written procedures for servicing brakes, provided that the exposure levels associated with the employer's procedures do not exceed the levels associated with the enclosed vacuum system or brake washing equipment. Consult OSHA regulations for more details.

d. Wear a respirator equipped with a HEPA filter approved by NIOSH or MSHA for use with asbestos when grinding or machining brake linings. In addition, do such work in an area with a local exhaust ventilation system equipped with a HEPA filter.

e. **NEVER** use compressed air by itself, dry brushing, or a vacuum not equipped with a HEPA filter when cleaning brake parts or assemblies. **NEVER** use carcinogenic solvents, flammable solvents, or solvents that can damage brake components as wetting agents.

4. Cleaning Work Areas. Clean work areas with a vacuum equipped with a HEPA filter or by wet wiping. **NEVER** use compressed air or dry sweeping to clean work areas. When you empty vacuum cleaners and handle used rags, wear a respirator equipped with a HEPA filter approved by NIOSH or MSHA for use with asbestos. When you replace a HEPA filter, wet the filter with a fine mist of water and dispose of the used filter with care.

5. Worker Clean-Up**.** After servicing brakes, wash your hands before you eat, drink or smoke. Shower after work. Do not wear work clothes home. Use a vacuum equipped with a HEPA filter to vacuum work clothes after they are worn. Launder them separately. Do not shake or use compressed air to remove dust from work clothes.

6. Waste Disposal. Dispose of discarded linings, used rags, cloths and HEPA filters with care, such as in sealed plastic bags. Consult applicable EPA, state and local regulations on waste disposal.

### Regulatory Guidance

References to OSHA, NIOSH, MSHA, and EPA, which are regulatory agencies in the United States, are made to provide further guidance to employers and workers employed within the United States. Employers and workers employed outside of the United States should consult the regulations that apply to them for further guidance.

## NON-ASBESTOS FIBERS WARNING

***The following procedures for servicing brakes are recommended to reduce exposure to non-asbestos fiber dust, a cancer and lung disease hazard. Material Safety Data Sheets are available from ArvinMeritor.***

### Hazard Summary

Most recently manufactured brake linings do not contain asbestos fibers. These brake linings may contain one or more of a variety of ingredients, including glass fibers, mineral wool, aramid fibers, ceramic fibers and silica that can present health risks if inhaled. Scientists disagree on the extent of the risks from exposure to these substances. Nonetheless, exposure to silica dust can cause silicosis, a non-cancerous lung disease. Silicosis gradually reduces lung capacity and efficiency and can result in serious breathing difficulty. Some scientists believe other types of non-asbestos fibers, when inhaled, can cause similar diseases of the lung. In addition, silica dust and ceramic fiber dust are known to the State of California to cause lung cancer. U.S. and international agencies have also determined that dust from mineral wool, ceramic fibers and silica are potential causes of cancer.

Accordingly, workers must use caution to avoid creating and breathing dust when servicing brakes. Specific recommended work practices for reducing exposure to non-asbestos dust follow. Consult your employer for more details.

### Recommended Work Practices

1. Separate Work Areas. Whenever feasible, service brakes in a separate area away from other operations to reduce risks to unprotected persons.

2. Respiratory Protection. OSHA has set a maximum allowable level of exposure for silica of 0.1 $mg/m^3$ as an 8-hour time-weighted average. Some manufacturers of non-asbestos brake linings recommend that exposures to other ingredients found in non-asbestos brake linings be kept below 1.0 f/cc as an 8-hour time-weighted average. Scientists disagree, however, to what extent adherence to these maximum allowable exposure levels will eliminate the risk of disease that can result from inhaling non-asbestos dust.

Therefore, wear respiratory protection at all times during brake servicing, beginning with the removal of the wheels. Wear a respirator equipped with a high-efficiency (HEPA) filter approved by NIOSH or MSHA, if the exposure levels may exceed OSHA or manufacturer's recommended maximum levels. Even when exposures are expected to be within the maximum allowable levels, wearing such a respirator at all times during brake servicing will help minimize exposure.

3. Procedures for Servicing Brakes.

a. Enclose the brake assembly within a negative pressure enclosure. The enclosure should be equipped with a HEPA vacuum and worker arm sleeves. With the enclosure in place, use the HEPA vacuum to loosen and vacuum residue from the brake parts.

b. As an alternative procedure, use a catch basin with water and a biodegradable, non-phosphate, water-based detergent to wash the brake drum or rotor and other brake parts. The solution should be applied with low pressure to prevent dust from becoming airborne. Allow the solution to flow between the brake drum and the brake support or the brake rotor and caliper. The wheel hub and brake assembly components should be thoroughly wetted to suppress dust before the brake shoes or brake pads are removed. Wipe the brake parts clean with a cloth.

c. If an enclosed vacuum system or brake washing equipment is not available, carefully clean the brake parts in the open air. Wet the parts with a solution applied with a pump-spray bottle that creates a fine mist. Use a solution containing water, and, if available, a biodegradable, non-phosphate, water-based detergent. The wheel hub and brake assembly components should be thoroughly wetted to suppress dust before the brake shoes or brake pads are removed. Wipe the brake parts clean with a cloth.

d. Wear a respirator equipped with a HEPA filter approved by NIOSH or MSHA when grinding or machining brake linings. In addition, do such work in an area with a local exhaust ventilation system equipped with a HEPA filter.

e. **NEVER** use compressed air by itself, dry brushing, or a vacuum not equipped with a HEPA filter when cleaning brake parts or assemblies. **NEVER** use carcinogenic solvents, flammable solvents, or solvents that can damage brake components as wetting agents.

4. Cleaning Work Areas. Clean work areas with a vacuum equipped with a HEPA filter or by wet wiping. **NEVER** use compressed air or dry sweeping to clean work areas. When you empty vacuum cleaners and handle used rags, wear a respirator equipped with a HEPA filter approved by NIOSH or MSHA, to minimize exposure. When you replace a HEPA filter, wet the filter with a fine mist of water and dispose of the used filter with care.

5. Worker Clean-Up. After servicing brakes, wash your hands before you eat, drink or smoke. Shower after work. Do not wear work clothes home. Use a vacuum equipped with a HEPA filter to vacuum work clothes after they are worn. Launder them separately. Do not shake or use compressed air to remove dust from work clothes.

6. Waste Disposal**.** Dispose of discarded linings, used rags, cloths and HEPA filters with care, such as in sealed plastic bags. Consult applicable EPA, state and local regulations on waste disposal.

### Regulatory Guidance

References to OSHA, NIOSH, MSHA, and EPA, which are regulatory agencies in the United States, are made to provide further guidance to employers and workers employed within the United States. Employers and workers employed outside of the United States should consult the regulations that apply to them for further guidance.

# OVERHAUL

EN06Z0802H200008

**⚠ WARNING**

- **ArvinMeritor Automatic Slack Adjusters (ASA's) should not need to be manually adjusted in service. ASA's should not have to be adjusted to correct excessive pushrod stroke. The excessive stroke may be an indication that a problem exists with the foundation brake, ASA, brake actuator or other system components.**
- **ArvinMeritor recommends troubleshooting the problem, replacing suspect components and then confirming proper brake operation prior to returning the vehicle into service.**
- **In the event that a manual adjustment must be made (although should not be a common practice), a service appointment and full foundation brake, ASA, and other system component inspection should be conducted as soon as possible to ensure integrity of the overall brake system.**

## IMPORTANT POINTS-DISASSEMBLY

**1. BEFORE YOU BEGIN**

This manual describes the correct service and repair procedures for Meritor cam brakes. Before you begin procedures:

(1) Read and understand all instructions and procedures before you begin to service components.

(2) Read and observe all Caution and Warning safety alerts that precede instructions or procedures you will perform. These alerts help to avoid damage to components, serious personal injury, or both.

(3) Follow your company's maintenance and service, installation, and diagnostics guidelines.

(4) Use special tools when required to help avoid serious personal injury and damage to components.

**Safety Alerts, Torque Symbol and Notes**

| | |
|---|---|
| **⚠ WARNING** | **A Warning alerts you to an instruction or procedure that you must follow exactly to avoid serious personal injury.** |
| **⚠ CAUTION** | **A Caution alerts you to an instruction or procedure that you must follow exactly to avoid damage to components.** |
| **NOTICE** | **A Note provides information or suggestions that help you correctly service a component.** |

**2. HOW TO ORDER TOOLS, SUPPLIES AND BRAKE CONVERSION KITS**

Call ArvinMeritor's Commercial Vehicle Aftermarket at 888-725-9355 to order tools and supplies specified in this manual. You also can order the following brake conversion kits.

- A kit to convert Q Series cam brake shoes (except models with cast shoes) to Q Series brakes with "quick change" shoes
- A kit to convert standard 16.5-inch Q Series cam brakes to Q Plus™ cam brakes

**⚠ WARNING**

- **Some brake linings contain asbestos fibers, a cancer and lung disease hazard. Some brake linings contain non-asbestos fibers, whose long-term effects to health are unknown. You must use caution when you handle both asbestos and non-asbestos materials. Refer to page BR02-65 in this manual for hazard summaries and recommended work practices.**
- **To prevent serious eye injury, always wear safe eye protection when you perform vehicle maintenance and service.**
- **Park the vehicle on a level surface. Block the wheels to prevent the vehicle from moving. Support the vehicle with safety stands. Do not work under a vehicle supported only by jacks. Jacks can slip or fall over. Serious personal injury and damage to components can result.**

**3. REMOVAL**

(1) Wheel Components

a. Park the vehicle on a level surface.
b. Block the wheels to prevent the vehicle from moving.
c. Raise the vehicle, so that the area you will service is off of the ground. Support the vehicle with safety stands.

**⚠ WARNING**

**Before you service a spring chamber, carefully follow the manufacturer's instructions to compress and lock the spring to completely release the brake. Verify that no air pressure remains in the service chamber before you proceed. Sudden release of compressed air can cause serious personal injury and damage to components.**

d. If the brake has spring chambers, carefully cage and lock the spring, so that the spring cannot actuate during assembly.

(2) Automatic Slack Adjuster

For complete maintenance and service information on Meritor's automatic slack adjuster, refer to Automatic Slack Adjuster.

**⚠ CAUTION**

**You must disengage a pull pawl before rotating the manual adjusting nut, or you will damage the pawl teeth. A damaged pawl will not allow the slack adjuster to automatically adjust brake clearance. Replace damaged pawls before putting the vehicle in service.**

a. Disengage the pull pawl. Use a screwdriver or equivalent tool to pry the pull pawl at least 1/32-inch (0.8 mm) to disengage the teeth.

- **If the slack adjuster has a conventional pawl:** Remove the pawl.

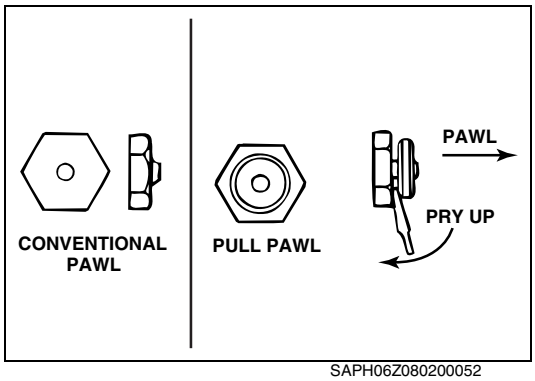


SAPH06Z080200052

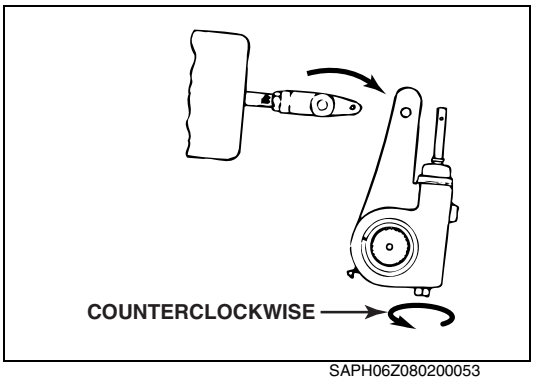

SAPH06Z080200053

b. Use a wrench to turn the manual adjusting nut COUNTER-CLOCKWISE until the brake shoes are fully retracted, and the lining clears the drum.

**⚠ WARNING**
**When you remove a clevis pin that has a spring, hold the spring with pliers. The spring can disengage from the clevis with enough force to cause serious personal injury.**

c. Remove both clevis pins, and retainer clips or cotter pins. Move the slack adjuster away from the clevis.
d. Follow the manufacturer's instructions to remove the wheel and drum from the axle.

(3) Brake Shoes
All Q Plus and Q Series 15-Inch and 16.5-Inch Brakes

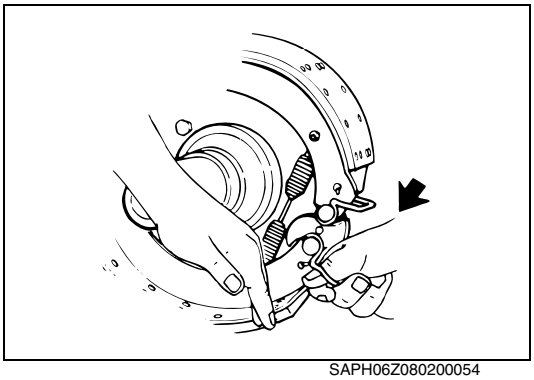
SAPH06Z080200054

1. Push down on the bottom brake shoe. Pull on the cam roller retainer clip to remove the bottom cam roller.
2. Lift the top brake shoe and pull on the cam roller retainer clip to remove the top cam roller.

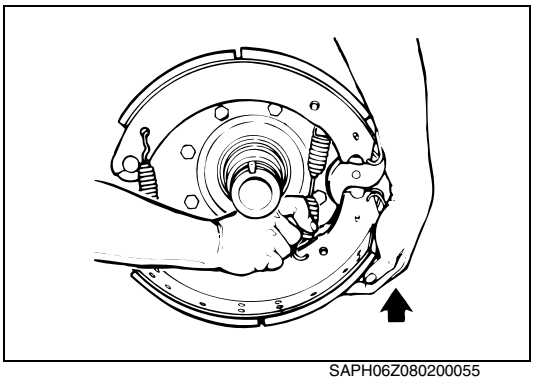
SAPH06Z080200055

3. Lift the bottom shoe to release the tension on the brake shoe return spring.

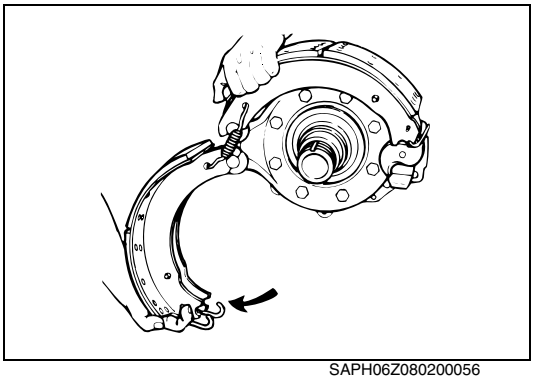
SAPH06Z080200056

4. Rotate the bottom shoe to release the tension on the brake shoe retainer springs.
5. Remove the shoe retainer springs and the brake shoes.

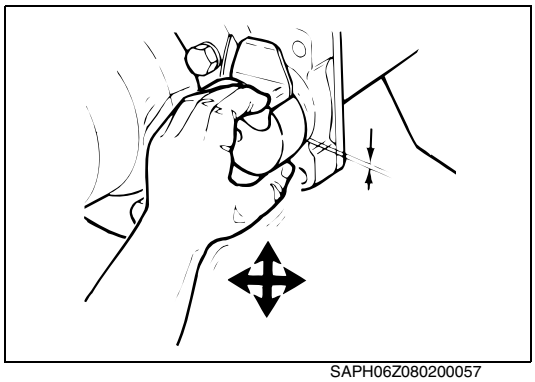
SAPH06Z080200057

(4) Check Cam-to-Bushing Radial Free Play and Axial End Play
Before you remove the automatic slack adjuster and camshaft, move the camshaft as shown in figure. Use a feeler gauge to verify that the cam-to-bushing radial free play and axial end play are within specification.

- **If radial free play movement is less than 0.030-inch (0.76 mm):** Do not replace the bushings and seals.
- **If radial free play movement exceeds 0.030-inch (0.76 mm):** Replace the bushings and seals.
- **If axial end play movement exceeds 0.060-inch (1.52 mm):** Remove the snap ring. Add an appropriate number of spacing washers between the slack adjuster and snap ring to achieve the correct specification of 0.005-0.060-inch (0.127-1.52 mm).

(5) Remove the Automatic Slack Adjuster and Camshaft
a. Remove the snap ring, washers and spacers from the camshaft.
b. Remove the automatic slack adjuster from the camshaft.

- **If the slack adjuster has a "quick connect" clevis, and the gap between the clevis and clevis collar exceeds 0.060-inch (1.52 mm):** Remove the clevis from the push rod.

c. Remove the camshaft from the spider. Use the correct size driver to remove the camshaft bushings from the spider and spider bracket.

**⚠ WARNING**
**Solvent cleaners can be flammable, poisonous and cause burns. Examples of solvent cleaners are carbon tetrachloride, and emulsion-type and petroleum-base cleaners. Read the manufacturer's instructions before using a solvent cleaner, then carefully follow the instructions. Also follow the procedures below.**

- **Wear safe eye protection.**
- **Wear clothing that protects your skin.**
- **Work in a well-ventilated area.**
- **Do not use gasoline, or solvents that contain gasoline. Gasoline can explode.**
- **You must use hot solution tanks or alkaline solutions correctly. Read the manufacturer's instructions before using hot solution tanks and alkaline solutions. Then carefully follow the instructions.**

**⚠ CAUTION**
**Do not use hot solution tanks or water and alkaline solutions to clean ground or polished parts. Damage to parts can result.**

(6) Clean and Dry Parts
Use soap and water to clean non-metal parts. Dry parts immediately after cleaning with soft, clean paper or cloth, or compressed air.

(7) Corrosion Protection
a. **If you assemble parts immediately after you clean them:** Lubricate parts with grease to prevent corrosion. Parts must be clean and dry before you lubricate them.
b. **If you store parts after you clean them:** Apply a corrosion-preventive material. Store parts in a special paper or other material that prevents corrosion.

**4. IMPORTANT POINTS-ASSEMBLY**

(1) Automatic Slack Adjuster

a. If the slack adjuster has a "quick connect" clevis, check the gap between the clevis and the collar.

- **If the gap exceeds 0.060-inch (1.52 mm):** Replace the clevis with a one-piece threaded clevis.

b. Check the clevis pins, clips and bushing in the slack adjuster arm for wear and damage.
Replace worn or damaged parts. Check the bushing's diameter to ensure it does not exceed 0.531-inch (13.5 mm).

- **If the bushing diameter exceeds 0.531-inch (13.5 mm):** Replace the bushing.

**⚠ CAUTION**
**You must disengage a pull pawl or remove a conventional pawl before rotating the manual adjusting nut, or you will damage the pawl teeth. A damaged pawl will not allow the slack adjuster to automatically adjust brake clearance. Replace damaged pawls before putting the vehicle in service.**

**NOTICE**
**When you service an automatic slack adjuster with a conventional pawl, replace the conventional pawl with a pull pawl.**

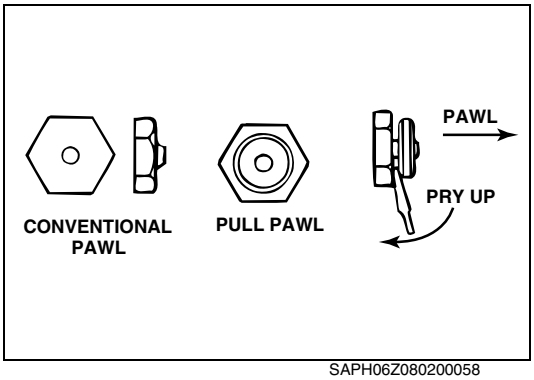

SAPH06Z080200058

c. Disengage the pull pawl. Use a screwdriver or equivalent tool to pry the pull pawl at least 1/32-inch (0.8 mm) to disengage the teeth.

- **If the slack adjuster has a conventional pawl:** Remove the pawl.

**⚠ CAUTION**
**Only turn the adjusting nut counterclockwise when you check gear torque on an automatic slack adjuster. If you turn the adjusting nut incorrectly, you will damage the pawl teeth. A damaged pawl will prevent the slack adjuster from automatically adjusting clearance between the linings and drum. Damage to components can result.**

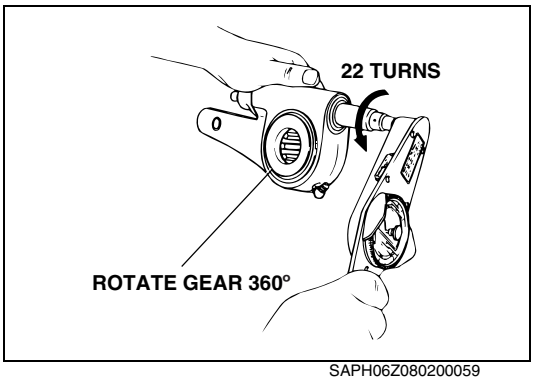

SAPH06Z080200059

d. Use a lb-in torque wrench and turn the adjusting nut COUNTERCLOCKWISE to rotate the gear 360 degrees (22 turns of the wrench) as you read the torque scale on the wrench. The value should remain at less than 25 lb-in (2.83 N·m) as you rotate the gear.

- **If the torque value remains less than 25 lb-in (2.8 N·m) as you rotate the gear:** The slack adjuster is operating correctly.
- **If the torque value exceeds 25 lb-in (2.8 N·m) as you rotate the gear:** The slack adjuster is not operating correctly.
Disassemble the slack adjuster. Check that it's assembled correctly. Check that parts are aligned correctly.

e. Re-engage the pull pawl. Remove the screwdriver or equivalent tool. The pull pawl will re-engage automatically.

- **If the slack adjuster has a conventional pawl:** Install the pawl assembly into the housing. Tighten the capscrew to 12-17 lb-ft (16-23 N·m).

**NOTICE**
**If necessary, install a camshaft into the slack adjuster gear to minimize grease flow through the gear holes.**

f. Use a grease gun to apply Meritor lubricant specification O-616-A, O-692 or O-645 to the slack adjuster grease fitting, until grease flows from around the camshaft splines and pawl assembly.

**Automatic Slack Adjuster Grease Specifications**

| Components | Meritor Specification | NLGI Grade | Grease Type | Outside Temperature |
|---|---|---|---|---|
| Automatic Slack Adjuster | O-616-A | 1 | Clay Base | Down to -40°F (-40°C) |
| | O-692 | 1 and 2 | Lithium Base | Down to -40°F (-40°C) |
| | O-645 | 2 | Synthetic Oil, Clay Base | Down to -65°F (-54°C) |
| Clevis Pins | Any of Above | See Above | See Above | See Above |
| | O-637 | 1-1/2 | Calcium Base | Refer to the grease manufacturer's specifications for the temperature service limits. |
| | O-641 | — | Anti-Seize | |

*Do not mix Meritor grease specification O-637 (part number 2297-U-4571), a calcium-base, rust-preventive grease, with other greases.

(2) Camshafts

**NOTICE**

**Install new camshaft bushings and seals whenever you install a new camshaft.**

a. Tighten all spider bolts to the correct torque.

b. Use a seal driver to install new camshaft seals and new bushings into the cast spider and camshaft bracket.

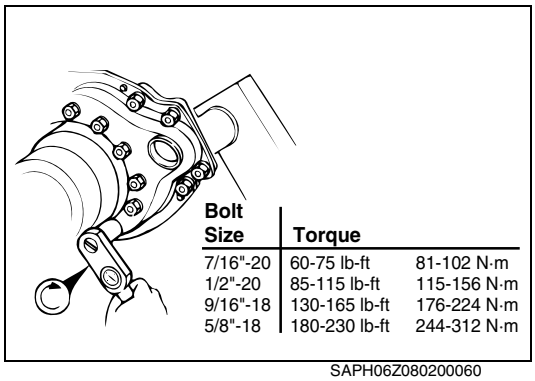


SAPH06Z080200060

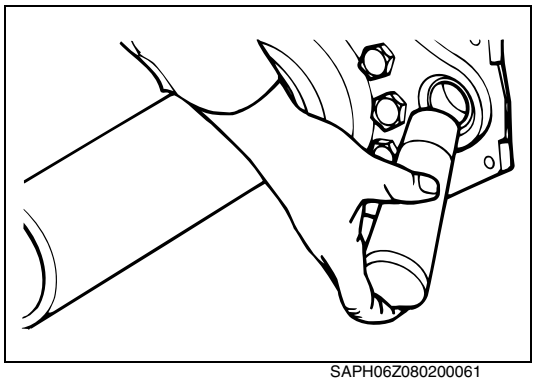

SAPH06Z080200061

- **If the brake has a stamped spider:** Install both bushings into the bracket. Install the seals with the seal lips toward the slack adjuster.

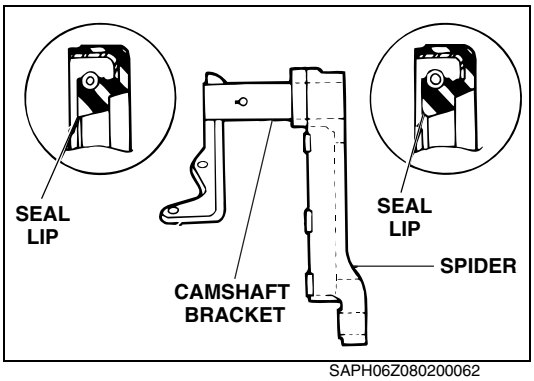

SAPH06Z080200062

**⚠ WARNING**
**To prevent serious eye injury, always wear safe eye protection when you perform vehicle maintenance or service.**

**⚠ WARNING**
**Do not use the straight-center bar shoe return spring with the Q Plus camshaft. The shoe spring can interfere with the camshaft and affect braking performance. Serious personal injury and damage to components can result.**

**⚠ CAUTION**
**Only install a Q Plus camshaft in a Q Plus brake. A Q Series hammer-claw camshaft will not provide enough clearance between the brake shoe and the brake drum. Brake drag and damage to components can result.**
**To install a new brake drum so that it fits correctly over a Q Plus brake shoe, you must install a Q Plus camshaft to prevent damage to components.**

**5. INSTALLATION**

(1) Camshaft

a. Install the cam head thrust washer onto the camshaft. Apply Meritor specification O-617-A or O-617-B grease to the camshaft bushings and journals.

b. Install the camshaft through the spider and bracket so that the camshaft turns freely by hand.

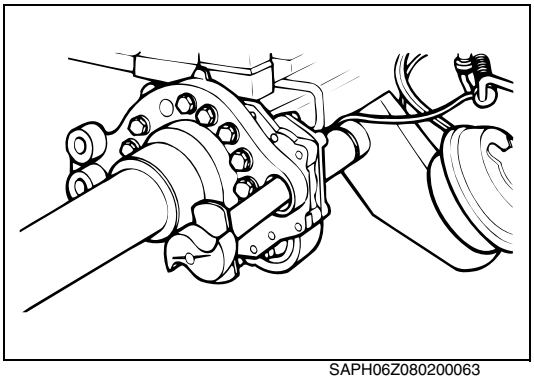
SAPH06Z080200063

(2) Shoe Return Spring

Install the new offset shoe return spring with the open end of the spring hooks toward the camshaft.

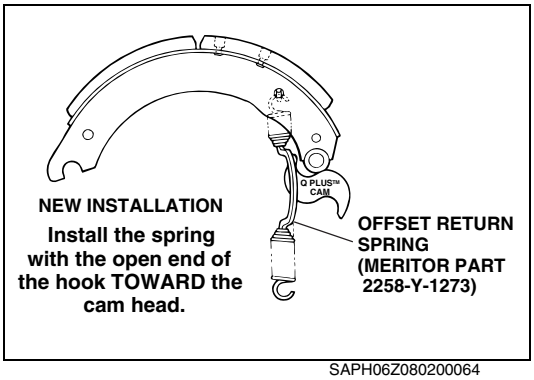

SAPH06Z080200064

(3) Automatic Slack Adjuster onto the Camshaft

a. Check the camshaft and bushings and seals for wear and corrosion. Turn the camshaft by hand to check for smooth operation. Repair or replace parts as required.

b. Apply the service brake and spring brake several times. Check that the chamber return spring retracts the push rod quickly and completely. If necessary, replace the return spring or the air chamber.

c. Verify that the new automatic slack adjuster is the same length as the one you are replacing. Refer to Table below.

**Chamber and Automatic Slack Adjuster Sizes**

| Length of Slack Adjuster (Inches) | Size of Chamber (Square Inches) |
|---|---|
| 5 | 9*, 12*, 16, 20, 24, 30 |
| 5-1/2 | 9*, 12*, 16, 20, 24, 30, 36 |
| 6 | 24, 30, 36 |
| 6-1/2 | 30, 36 |
| * Use an auxiliary spring on slack adjusters used with these size chambers. A size 9 or 12 chamber return spring cannot supply enough spring tension to completely retract the slack adjuster. | |

**⚠ WARNING**

**Before you service a spring chamber, carefully follow the manufacturer's instructions to compress and lock the spring to completely release the brake. Verify that no air pressure remains in the service chamber before you proceed. Sudden release of compressed air can cause serious personal injury and damage to components.**

d. If the vehicle has spring brakes, follow the chamber manufacturer's instructions to compress and lock springs to completely release the brakes. Verify that no air pressure remains in the service chambers.

**⚠ CAUTION**

**Most Meritor automatic slack adjusters manufactured after January 1990 have lubrication holes in the gear splines. Do not operate the actuator rod before you install the slack adjuster. Lubricant can pump through the holes and onto the splines. Damage to components can result.**

e. If the automatic slack adjuster gear has a 10-tooth spline, apply Meritor specification O-637 (part number 2297-U-4571) anti-seize compound, or equivalent. This specification is a corrosion-control grease. Do not mix this grease with other greases.

**NOTICE**

**Install the slack adjuster so that you can remove a conventional pawl or disengage a pull pawl when you adjust the brake.**

f. Install the slack adjuster onto the camshaft. Position the slack adjuster so that you can access the pawl when you adjust the brake.

g. Verify that camshaft axial end play is 0.005-0.060-inch (0.127-1.52 mm).

- **If axial end play exceeds 0.060-inch (1.52 mm):** Remove the snap ring. Add an appropriate number of spacing washers to achieve the correct specification.

h. Install the clevis onto the push rod.

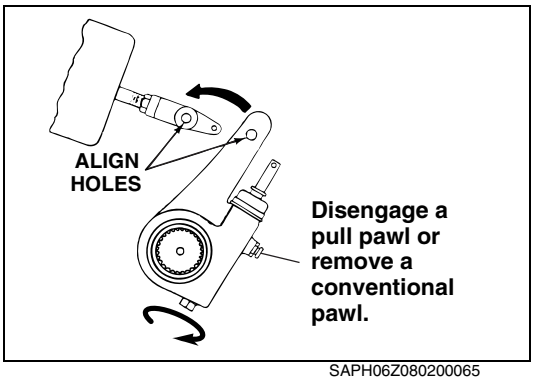


SAPH06Z080200065

**⚠ CAUTION**
**You must disengage a pull pawl or remove a conventional pawl before rotating the manual adjusting nut, or you will damage the pawl teeth. A damaged pawl will not allow the slack adjuster to automatically adjust brake clearance. Replace damaged pawls before putting the vehicle in service.**

i. Disengage the pull pawl or remove a conventional pawl. Turn the manual adjusting nut to align the holes in the slack adjuster arm and clevis.

(4) Welded Clevis

a. Check the clevis position. Apply Meritor specification O-637 (part number 2297-U-4571) anti-seize compound or equivalent to the large and small clevis pins. This specification is a corrosion-control grease. Do not mix this grease with other greases.

**⚠ CAUTION**
**Always replace used clevis pin retainer clips with new ones when you service an automatic slack adjuster or chamber. Do not reuse retainer clips. Discard used clips. When you remove a retainer clip, it can bend or "gap apart" and lose retention. Damage to components can result.**

**NOTICE**
**Meritor recommends that you replace cotter pins with clevis retainer clips at assembly.**

b. Install new clevis pin retainer clips or cotter pins to secure the clevis pins. Retainer clips must be fully installed and positioned around the side of the clevis pin.

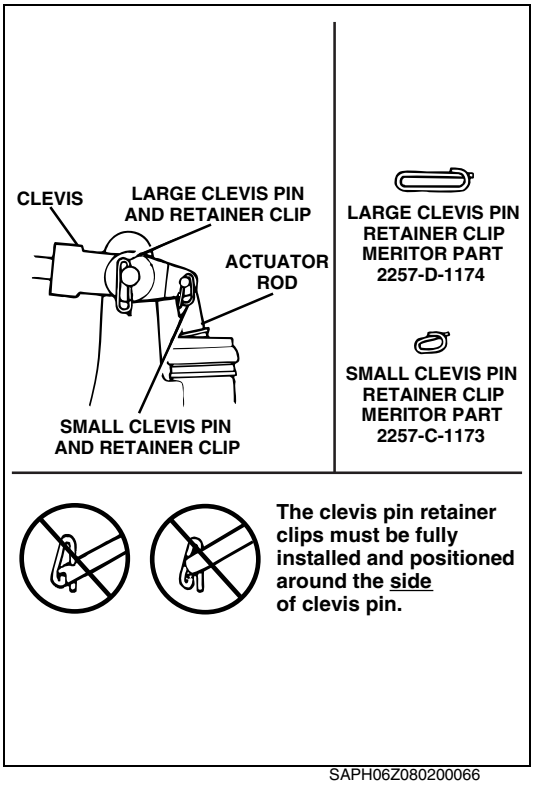


SAPH06Z080200066

(5) Threaded Clevis

Adjust the Clevis Position on the Chamber Push Rod

Automatic Slack Adjuster Template Method for Standard Stroke Chambers Only

**⚠ WARNING**

- **Meritor provides a slack adjuster template for truck and tractor, trailer, and coach drum brakes. These templates are not interchangeable. You must use the correct template when you install the clevis.**
- **If you use the wrong template, the automatic slack adjuster will not adjust the brakes correctly. Under-adjustment can increase stopping distances. Over-adjustment can cause the linings to drag. Serious personal injury and damage to components can result.**

a. Install the large clevis pin through the large clevis pin hole in the correct slack adjuster template for the drum brake you're servicing.

b. Select the hole at the small end of the template that matches the slack adjuster arm length. Position and hold the hole on the center of the camshaft.

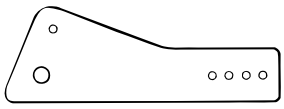

| Color of Template | Part Number | Applications |
|---|---|---|
| Dark brown | TP-4786 | Truck or tractor drum brake |
| Tan | TP-4787 | Trailer drum brake |
| White | TP-4781 | Coach drum brake |

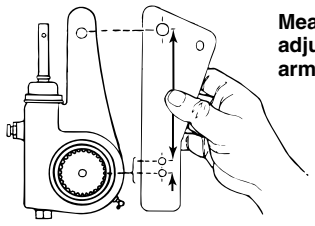


SAPH06Z080200067

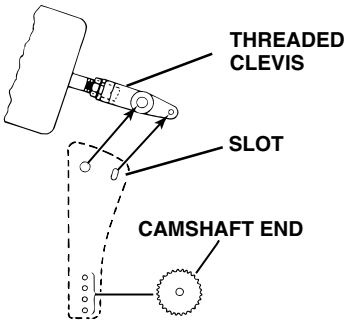


SAPH06Z080200068

c. Look through the small clevis pin slot on the template to see if the small clevis hole completely aligns within the slot.

- **If the small clevis hole doesn't align within the slot:** Adjust the clevis until you can see the small clevis pin hole within the slot.

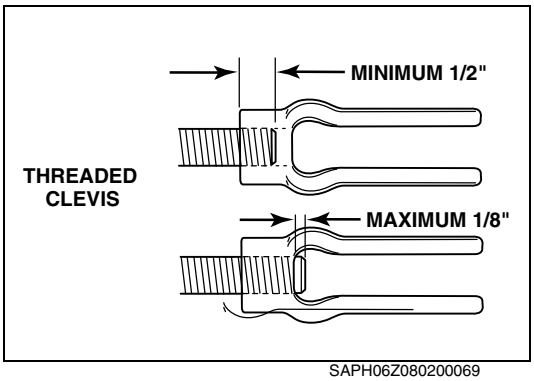


SAPH06Z080200069

d. Verify that thread engagement between the clevis and push rod is 1/2-5/8-inch (12.7-15.9 mm).

e. Verify that the push rod does not extend through the clevis more than 1/8-inch (12.7 mm).

- **If the push rod extends through the clevis more than 1/8-inch (12.7 mm):** Cut the push rod, or install a new air chamber and push rod.

f. Tighten the jam nut against the clevis to the torque specification.

**Jam Nut Torque Specifications**

| Threads | Torque |
|---|---|
| 1/2-20 | 20-30 lb-ft (27-41 N·m) |
| 5/8-18 | 35-50 lb-ft (48-68 N·m) |

(6) **Brake Slack Adjuster Position (BSAP) Method for Standard Stroke and Long Stroke Chambers**

When you install the slack adjuster, verify that the BSAP chamber dimension matches the table in figure.

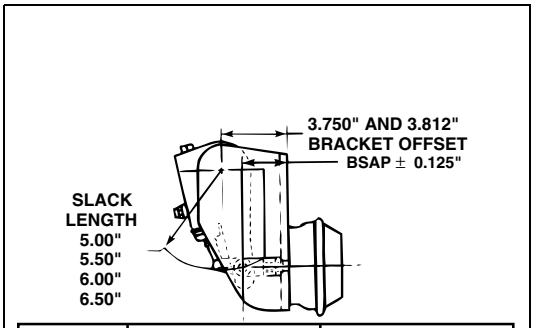


| Slack Adjuster Size | Standard Stroke Chamber Clevis (1.38") 1.38" | Long Stroke Chamber Clevis (1.30") 1.30" |
|---|---|---|
| 5.00" | 2.75" | 2.25" |
| 5.50" | 2.75" | 2.25" |
| 6.00" | 2.75" | 2.25" |
| 6.50" | 2.62" | 2.25" |

±0.125" Tolerance. You must use the correct clevis with the correct chamber type.

Correct positions of the automatic slack adjuster are 3.750-inch and 3.812-inch offsets only. For other bracket offsets, refer to the vehicle manufacturer's specifications.

SAPH06Z080200070

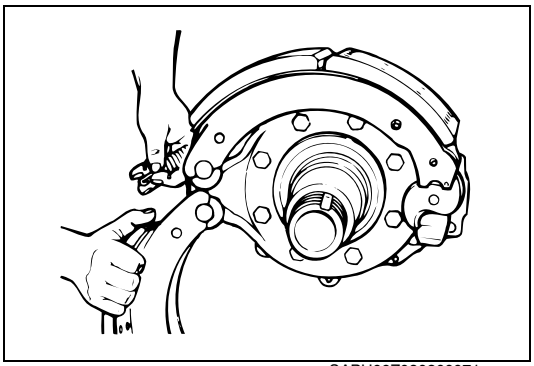

SAPH06Z080200071

(7) Brake Shoes

**NOTICE**

**Meritor recommends that you replace springs, rollers, anchor pins and cam bushings at each reline.**

**Q Plus and Q Series 16.5-Inch Brakes**

a. Place the upper brake shoe into position on the top anchor pin. Hold the lower brake shoe on the bottom anchor pin. Install two new brake shoe retaining springs.

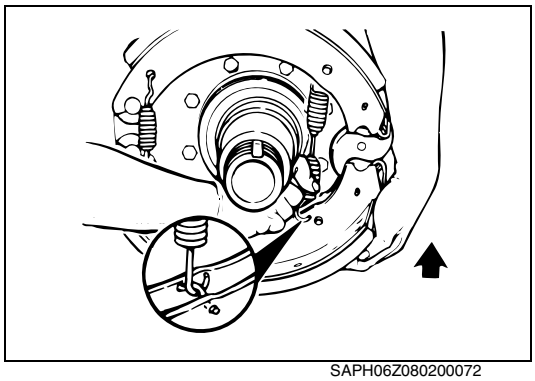

SAPH06Z080200072

b. Rotate the lower brake shoe forward. Install a new brake shoe return spring with the open end of the spring hooks toward the camshaft.

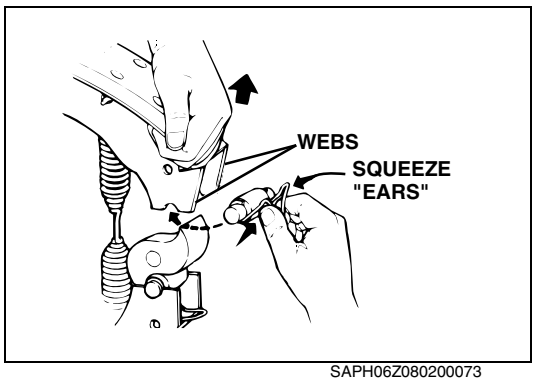


SAPH06Z080200073

c. Pull each brake shoe away from the camshaft to enable you to install the camshaft roller and roller retainer. Press the retainer "ears" to fit into the retainer between the brake shoe webs.

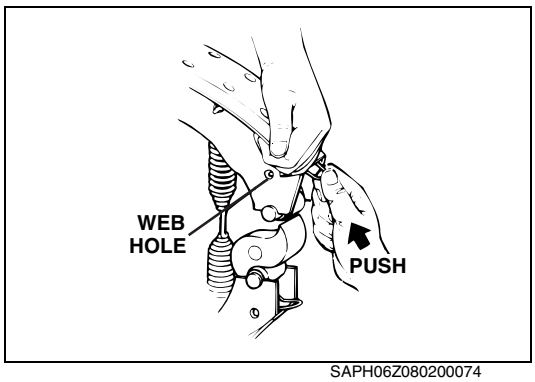


SAPH06Z080200074

d. Push the camshaft roller retainer into the brake shoe until the "ears" lock into the shoe web holes.

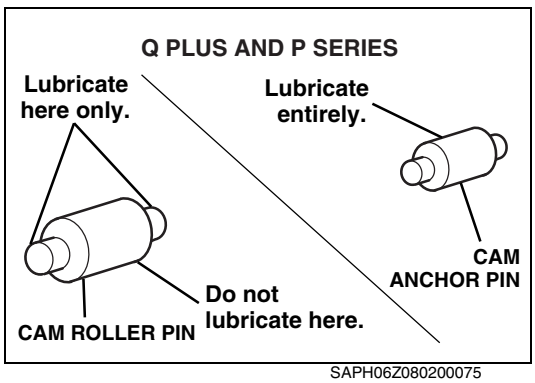


SAPH06Z080200075

e. Use Meritor specification grease O-617-A or O-617-B to lubricate the camshaft roller pin and anchor pin.

**Cam Brake Grease Specifications**

| Components | Meritor Specification | NLGI Grade | Grease Type | Outside Temperature |
|---|---|---|---|---|
| • Retainer Clips<br>• Anchor Pins<br>• Rollers (Journals Only)<br>• Camshaft Bushings | O-616-A | 1 | Clay Base | Down to -40°F (-40°C) |
| | O-617-A<br>or<br>O-617-B | 1<br><br>2 | Lithium 12-Hydroxy Stearate or Lithium Complex | Refer to the grease manufacturer's specifications for the temperature service limits. |
| | O-645 | 2 | Synthetic Oil, Clay Base | Down to -65°F (-54°C) |
| | O-692 | 1 and 2 | Lithium Base | Down to -40°F (-40°C) |
| Camshaft Splines | Any of Above | See Above | See Above | See Above |
| | O-637* | 1-1/2 | Calcium Base | Refer to the grease manufacturer's specifications for the temperature service limits. |
| | O-641 | — | Anti-Seize | |

*Do not mix Meritor grease specification O-637 (part number 2297-U-4571), a calcium-base, rust-preventive grease, with other greases.

**6. ADJUST THE BRAKES**

When you perform preventive maintenance procedures on an in-service brake, check both the free stroke and adjusted chamber stroke. Refer to Commercial Vehicle Safety Alliance (CVSA) Guidelines to Measure Push Rod Travel (Adjusted Chamber Stroke) in this section.

Free stroke sets the clearance between the linings and drum. The in-service free stroke may be slightly longer than 1/2-5.8-inch (12.7-15.9 mm) specified in this procedure. This is not a concern if the adjusted chamber stroke is within the limits shown in Table on page BR02-81.

(1) Measure Free Stroke

**⚠ CAUTION**

**You must disengage a pull pawl or remove a conventional pawl before rotating the manual adjusting nut, or you will damage the pawl teeth. A damaged pawl will not allow the slack adjuster to automatically adjust brake clearance. Replace damaged pawls before putting the vehicle in service.**

a. Disengage a pull pawl. Use a screwdriver or equivalent tool to pry the pull pawl at least 1/32-inch to disengage the teeth.

- **If the slack adjuster has a conventional pawl:** Remove the pawl.

b. Use a wrench to turn the manual adjusting nut COUNTERCLOCKWISE until the brake shoes are fully retracted, and the lining clears the drum. Then back-off the adjusting nut one-half turn in the opposite direction.

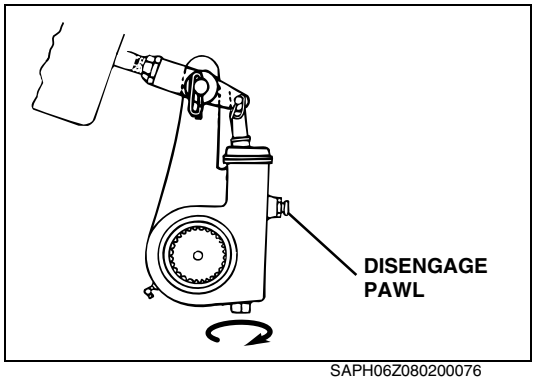


SAPH06Z080200076

c. Measure the distance from the center of the large clevis pin to the bottom of the air chamber while the brake is released. The measurement you obtain is "X" in figure.

d. Use a pry bar to move the slack adjuster and position the linings against the drum (brakes applied). Measure the same distance again while the brakes are applied. The measurement you obtain is "Y" in figure.

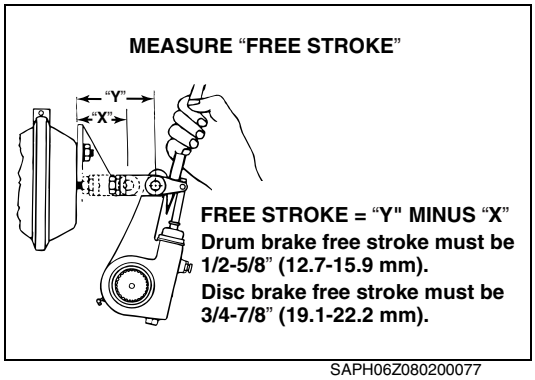


SAPH06Z080200077

**⚠ CAUTION**

**Do not set free stroke shorter than 1/2-5/8-inch (12.7-15.9 mm) for drum brakes. If the measurement is too short, linings can drag. Damage to components can result.**

e. Subtract "X" from "Y" to obtain the in-service free stroke. The measurement must be 1/2-5/8-inch (12.7-15.9 mm) for drum brakes.

- **If the free stroke measurement is not within specification:** Turn the adjusting nut COUNTERCLOCKWISE 1/8 turn to adjust free stroke. Follow the steps above to check free stroke again, until the measurement is within specification.

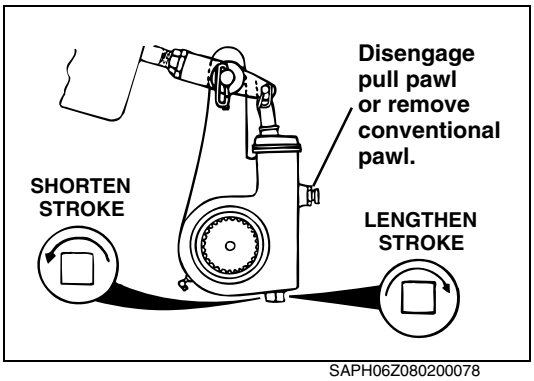

SAPH06Z080200078

f. Re-engage the pull pawl by removing the screwdriver or equivalent tool. The pull pawl will re-engage automatically.

- **If the slack adjuster has a conventional pawl:** Install the pawl assembly into the housing. Tighten the capscrew to 12-17 lb-ft (16-23 N·m).

g. If the brakes have spring chambers, carefully release the springs. Test the vehicle before you return it to service.

**7. COMMERCIAL VEHICLE SAFETY ALLIANCE (CVSA) GUIDELINES**

(1) Measure Push Rod Travel (Adjusted Chamber Stroke)
Use the following procedure to check in-service push rod travel (adjusted chamber stroke) on truck and tractor brakes.

**NOTICE**
**Hold the ruler parallel to the push rod and measure as carefully as possible. A measurement error can affect CVSA re-adjustment limits. CVSA states that "any brake 1/4-inch or more past the re-adjustment limit, or any two brakes less than 1/4-inch beyond the re-adjustment limit, will be cause for rejection."**

a. The engine must be OFF. If the brake has a spring chamber, follow the manufacturer's instructions to release the spring. Verify that no air pressure remains in the service section of the chamber.
b. Verify that pressure is 100 psi (689 kPa) in the air tanks. Determine the size and type of brake chambers on the vehicle.
c. With the brakes released, mark the push rod where it exits the chamber. Measure and record the distance. Have another person apply and hold the brakes on full application.
d. Measure push rod travel (adjusted chamber stroke) from where the push rod exits the brake chamber to your mark on the push rod. Measure and record the distance.
e. Subtract the measurement you recorded in Step c. from the measurement you recorded in Step d. The difference is push rod travel (adjusted chamber stroke).
f. Refer to Table on page BR02-81 to verify that the stroke length is correct for the size and type of air chambers on the vehicle.

- **If push rod travel (adjusted chamber stroke) is greater than the maximum stroke shown in on page BR02-81:** Inspect the slack adjuster and replace it, if necessary.

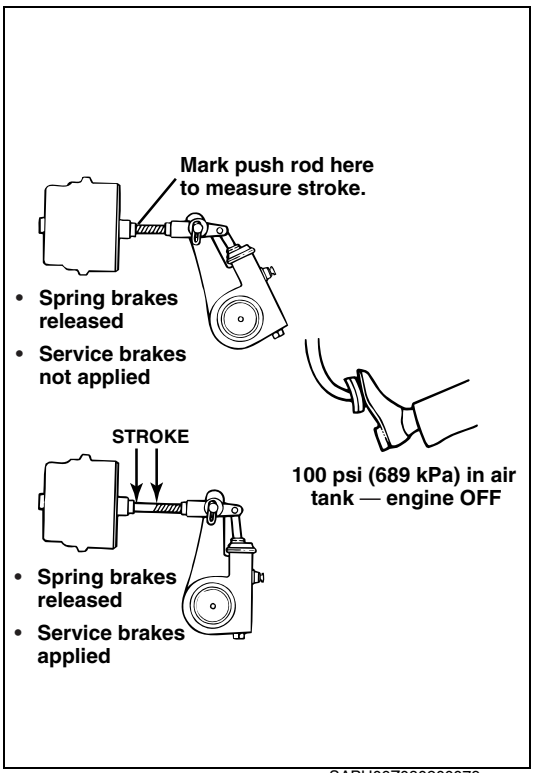

SAPH06Z080200079

**"Standard Stroke" Clamp-Type Brake Chamber Data**

| Type | Outside Diameter (inches) | Brake Adjustment Limit (inches) | |
|---|---|---|---|
| 6 | 4-1/2 | 1-1/4 | As short as possible without lining to drum contact |
| 9 | 5-1/4 | 1-3/8 | |
| 12 | 5-4/16 | 1-3/8 | |
| 16 | 6-3/8 | 1-3/4 | |
| 20 | 6-25/32 | 1-3/4 | |
| 24 | 7-7/32 | 1-3/4 | |
| 30 | 8-3/32 | 2 | |
| 36 | 9 | 2-1/4 | |

**"Long Stroke" Clamp-Type Brake Chamber Data**

| Type | Outside Diameter (inches) | Brake Adjustment Limit (inches) | |
|---|---|---|---|
| 16 | 6-3/8 | 2.0 | As short as possible without lining to drum contact |
| 20 | 6-25/32 | 2.0 | |
| 24 | 7-7/32 | 2.0 | |
| 24* | 7-7/32 | 2.5 | |
| 30 | 8-3/32 | 2.5 | |
| * For 3" maximum stroke type 24 chambers. | | | |

(2) Alternate Method to Measure Push Rod Travel (Adjusted Chamber Stroke)
Use the CVSA procedure, except in Steps c and d, measure the distance from the bottom of the air chamber to the center of the large clevis pin on each of the brakes.

(3) CVSA North American Out-of-Service Criteria Reference Tables
Information contained in the following tables is for reference only. Consult the CVSA's Out-of-Service Criteria Handbook for North American Standards, Appendix A. Visit their website at http://64.35.82.7/ to order the handbook.

**8. IMPORTANT INFORMATION ON LININGS AND PRIMARY SHOE LOCATIONS**

(1) Use the Correct Lining Material
Use the lining material specified by the vehicle manufacturer. This will help to ensure that the brakes perform correctly and meet Department of Transportation (DOT) performance regulations.

Also note that the drums and linings on a front axle can be different than drums and linings on a rear axle.

(2) Single Axles
Always reline both wheels of a single axle at the same time.

Always install the same linings and drums on both wheels of a single axle.

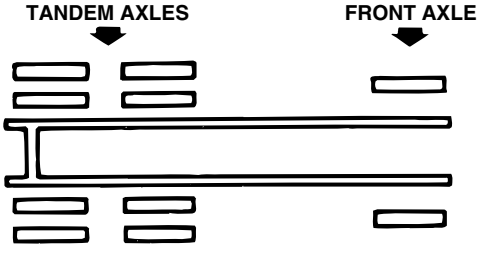


**Both wheel ends of each axle must have identical drums and lining.**

SAPH06Z080200080

(3) Combination Friction Linings

**⚠ CAUTION**
**When you install combination friction linings, you must install the primary lining on the primary brake shoe. If you install combination friction linings incorrectly, damage to components will result. Carefully follow instructions included with the replacement linings.**

You can combine brake linings, which means that the linings you install on the primary shoe will have a different friction rating than the linings you install on the secondary shoe.

However, you must install the primary lining on the primary shoe. Carefully follow the instructions included with the replacement combination linings.

(4) Primary Shoe Locations
The first shoe past the camshaft in the direction of wheel rotation is the primary shoe. The primary shoe can be either at the top or bottom position, depending on the location of the camshaft.

If the camshaft is behind the axle, the top shoe is the primary shoe.

If the cam is in front of the axle, the top shoe is the primary shoe.

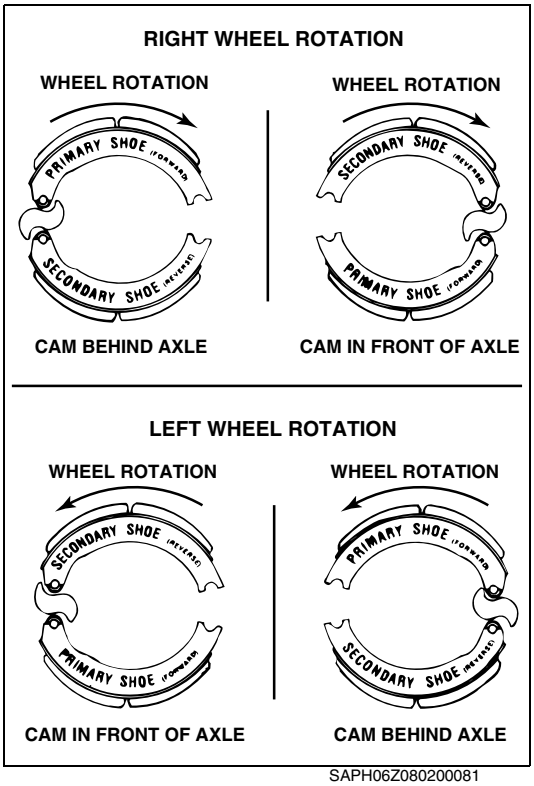

SAPH06Z080200081

**9. BEFORE YOU RETURN THE VEHICLE TO SERVICE**

(1) Check the complete air system for worn hoses and connectors. With air pressure at 100 psi (689 kPa), brakes released and engine off, loss of tractor air pressure must not exceed two psi a minute. Total tractor and trailer loss must not exceed three psi per minute.

(2) Check to see that the air compressor drive belt is tight. Air system pressure must rise to approximately 100 psi (689 kPa) in two minutes.

(3) The governor must be checked and set to the specifications supplied by the vehicle manufacturer.

(4) Both the tractor and trailer air systems must match the specifications supplied by the vehicle manufacturer.

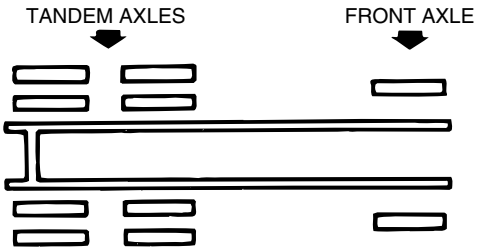


Both wheel ends of each axle must have identical drums and lining.

SAPH06Z080200082

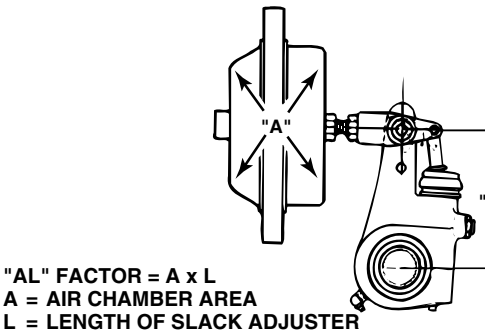


SAPH06Z080200083

(5) Both wheel ends of each axle must have the same linings and drums. All four wheel ends of tandem axles also must have the same linings and drums. It is not necessary for the front axle brakes to be the same as the rear driving axle brakes.

(6) Always follow the specifications supplied by the vehicle manufacturer for the correct lining to be used. Vehicle brake systems must have the correct friction material and these requirements can change from vehicle to vehicle.

(7) The return springs must retract the shoes completely when the brakes are released. Replace the return springs each time the brakes are relined. The spring brakes must retract completely when they are released.

(8) The air chamber area multiplied by the length of the automatic slack adjuster is called the "AL" factor. This number must be equal for both ends of a single axle and all four ends of a tandem axle.

# INSPECTION AND REPAIR

EN06Z0802H300003

**1. INSPECT PARTS**

(1) Check the spider for expanded anchor pin holes and for cracks. Replace damaged spiders and anchor pin bushings.

(2) Check the camshaft bracket for broken welds, cracks and correct alignment. Replace damaged brackets.

(3) Check anchor pins for corrosion and wear. Replace worn or damaged anchor pins.

(4) Check brake shoes for rust, expanded rivet holes, broken welds and correct alignment. Replace a shoe with any of the above conditions.

**2. 16.5-INCH BRAKE SHOES ONLY**

Anchor pin holes must not exceed 1.009-inches (25.63 mm) in diameter. The distance from the center of the anchor pin hole to the center of the roller hole must not exceed 12.779-inches (32.46 cm). Replace brake shoes with measurements that do not meet specifications.

(1) Check the camshaft for cracks, wear and corrosion. Check the cam head, bearing journals and splines. Replace worn or damaged camshafts.

(2) Inspect the large and small clevis pins for wear or damage. Replace worn or damaged parts.

**⚠ CAUTION**

**Always replace used clevis pin retainer clips with new ones when you service an automatic slack adjuster or chamber. Do not reuse retainer clips. Discard used clips. When you remove a retainer clip, it can bend or "gap apart" and lose retention. damage to components can result.**

**NOTICE**
**If you remove cotter pins from a slack adjuster during maintenance and service procedures, Meritor recommends that you install clevis pin retainer clips at assembly.**

(3) Inspect clevis pin retainer clips or cotter pins for wear or damage. Replace worn or damaged retainer clips or cotter pins. Do not reuse clevis pin retainer clips. Always replace used retainer clips with new ones. Discard used clips.

**⚠ WARNING**
**Do not operate the vehicle with the brake drum worn or machined beyond the discard dimension indicated on the drum. The brake system may not operate correctly and damage to components and serious personal injury can result.**

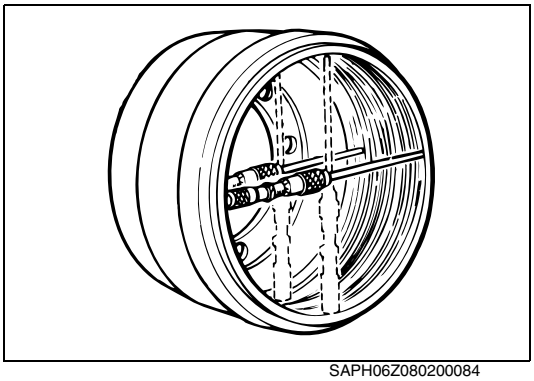
SAPH06Z080200084

(4) Use the following procedure to inspect the brake drums.
   a. Check the brake drums for cracks, severe heat checking, heat spotting, scoring, pitting and distortion. Replace drums as required. Do not turn or rebore brake drums, which decreases the strength and heat capacity of the drum.
   b. Measure the inside diameter of the drum in several locations with a drum caliper or internal micrometer. Replace the drum if the diameter exceeds the specifications supplied by the drum manufacturer.

(5) Check dust shields for wear and damage. Repair or replace worn or damaged parts as necessary.

### 3. RELINE THE BRAKES

**⚠ CAUTION**
**Reline the brakes when the lining thickness is 0.25-inch (6.3 mm) at the thinnest point. The rivets or bolts must not touch the drum. Damage to components will result.**

Meritor recommends that you replace springs, rollers, camshaft bushings and anchor pins at each reline.

Reline the brake when the lining thickness is 0.25-inch (6.3 mm) at the thinnest point.

Replace shoe retainer springs, check the drum, and perform a major inspection when you reline the brakes.

# AUTOMATIC SLACK ADJUSTER

## DESCRIPTION

EN06Z0802C100011

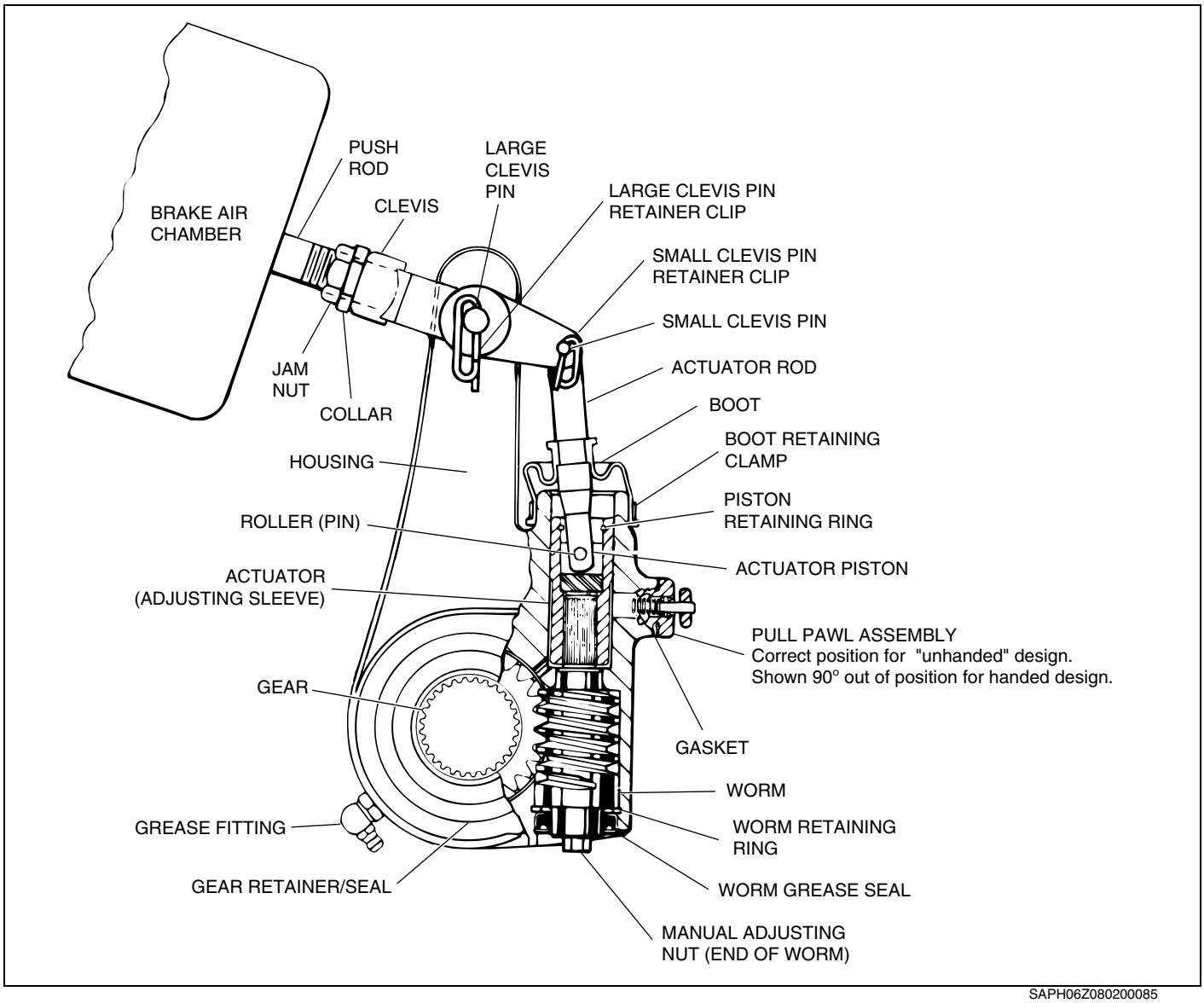


SAPH06Z080200085

# DIAGNOSTICS

EN06Z0802F300002

| Symptom | Possible Causes | Corrective Actions |
|---|---|---|
| Adjusted stroke is too long.<br>No adjustment. | The slack adjuster part number is incorrect. | Check with WD or OEM. |
| | The clevis angle is incorrect. | Use correct template or BSAP setting to install clevis correctly. |
| | Excessive wear exists between the clevis and collar (more than 0.060" [1.52 mm]). | Replace with threaded clevis. |
| | The jam nut at the clevis is loose. | Tighten to specification. |
| | There is a worn clevis pin bushing in slack arm (ID larger than 0.53" [13.46 mm]). | Replace bushing. |
| | There is a weak or damaged air chamber spring. Spring force must be at least 32 lb (142.4 N) at first push rod movement. | Replace return spring or air chamber. |
| | The spring brake does not retract fully. | Repair or replace spring brake. |
| | There are worn or damaged teeth on the pawl or actuator. | Replace pawl or actuator. |
| | High torque is required to rotate worm when slack is removed from vehicle.<br>In service slack maximum worm torque: 45 lb-in (5.09 N·m)<br>New or rebuilt slack maximum worm torque: 25 lb-in (2.83 N·m) | Rebuild or replace slack adjuster. |
| | Excessive looseness exists between the splines of the camshaft and the slack adjuster gear. | Replace powershaft, gear or automatic slack adjuster as needed. |
| | A cam brake has worn components (cam bushing, for example). | Replace components. |
| Adjusted stroke is too short.<br>Linings drag. | OEM replacement linings are not installed.<br>Linings exhibit excessive swell or growth. | Use Meritor-approved linings. |
| | The slack adjuster part number is incorrect. | Check with WD or OEM. |
| | The clevis angle is incorrect. | Use correct template to install clevis correctly. |
| | The jam nut at the clevis is loose. | Tighten to specification. |
| | The spring brake does not retract fully. | Repair or replace spring brake. |
| | The manual adjustment is incorrect. | Adjust brake. |
| | Poor contact exists between the linings and the drum. The drum is out-of-round. | Repair or replace drums or linings. |
| | Brake temperature is not even. | Correct brake balance. |

# COMPONENT LOCATOR

EN06Z0802D100007

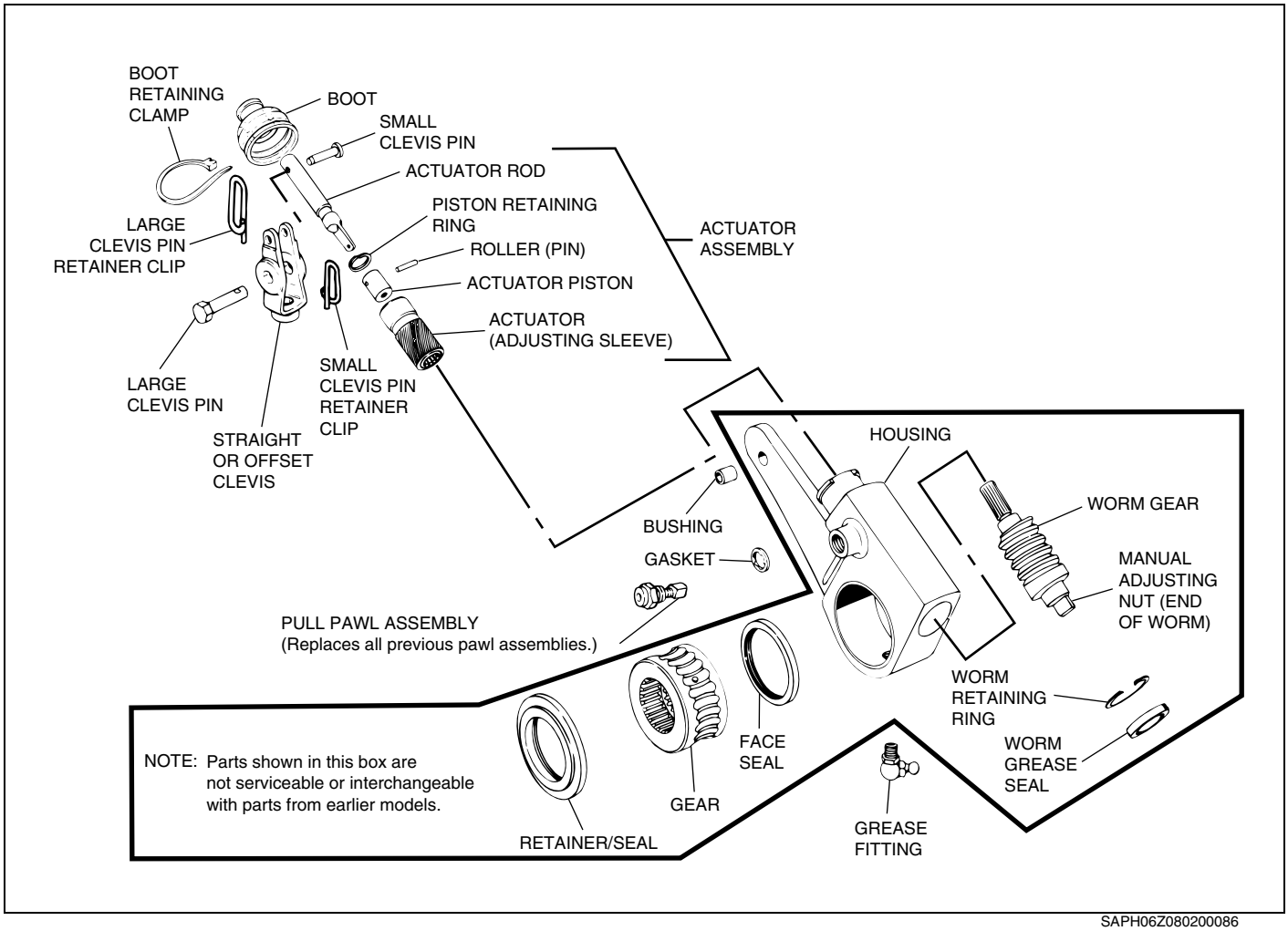


SAPH06Z080200086

## OFFSET CLEVIS FOR FRONT AXLE SLACK ADJUSTER

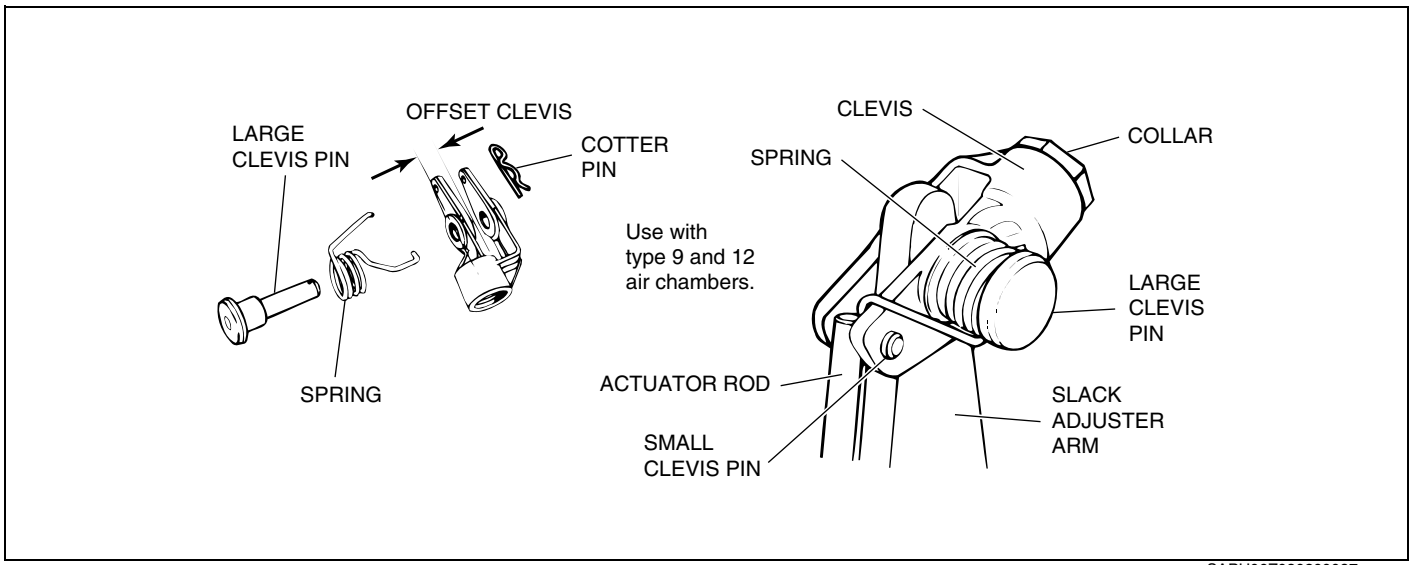


SAPH06Z080200087

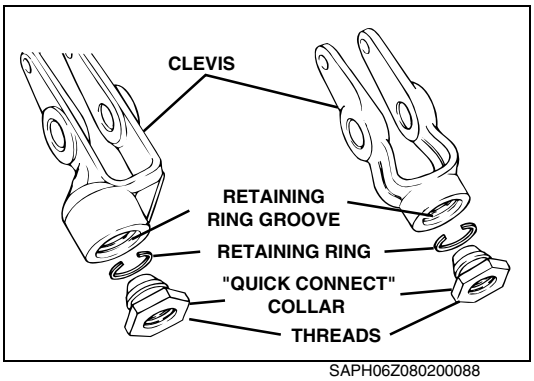

SAPH06Z080200088

**1. "QUICK CONNECT" CLEVIS**

Some models of Meritor's automatic slack adjuster have a "Quick Connect" clevis.

- A "Quick Connect" clevis is a three-piece assembly that cannot be separated after it is assembled.
- The collar has a threaded hole for the push rod.
- A "Quick Connect" clevis can be straight or offset. Use an offset clevis when more clearance is necessary between the air chamber and the tire on the front axle.

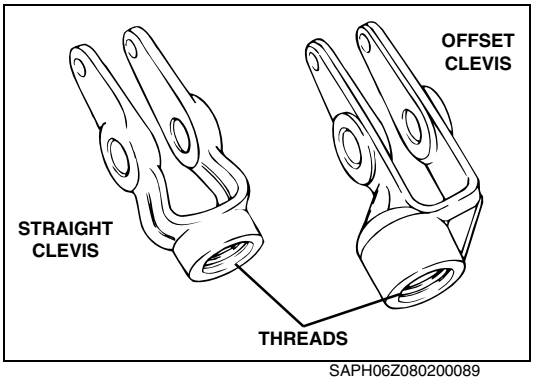

SAPH06Z080200089

**2. ONE-PIECE THREADED CLEVIS**

Most of Meritor's automatic slack adjusters, including the factory-installed slack adjusters on the new Q Plus™ LX500 and MX500 cam brakes, have a one-piece threaded clevis.

- The clevis has a threaded hole for the push rod.
- The one-piece threaded clevis can be straight or offset.
- All service replacement automatic slack adjusters have one-piece threaded clevises.

This publication provides maintenance and service procedures for Meritor's automatic slack adjuster. The information contained in this publication was current at the time of printing and is subject to revision without notice or liability.

(1) You must understand all procedures and instructions before you begin maintenance and service procedures.
(2) You must follow your company's maintenance and service guidelines.
(3) You must use special tools, when required, to avoid serious personal injury and damage to components.

Meritor uses the following notations to alert the user of possible safety issues and to provide information that will help to prevent damage to equipment and components.

| | |
|---|---|
| ⚠ **WARNING** | **A WARNING indicates a procedure that you must follow exactly to avoid serious personal injury.** |
| ⚠ **CAUTION** | A **CAUTION** indicates a procedure that you must follow exactly to avoid damaging equipment or components. Serious personal injury can also occur. |
| **NOTICE** | A **NOTICE** indicates an operation, procedure or instruction that is important for proper service.<br>A **NOTICE** can also supply information that will help to make service quicker and easier. |

# OVERHAUL

EN06Z0802H200009

**⚠ WARNING**

- **ArvinMeritor Automatic Slack Adjusters (ASA's) should not need to be manually adjusted in service. ASA's should not have to be adjusted to correct excessive pushrod stroke. The excessive stroke may be an indication that a problem exists with the foundation brake, ASA, brake actuator or other system components.**
- **ArvinMeritor recommends troubleshooting the problem, replacing suspect components and then confirming proper brake operation prior to returning the vehicle into service.**
- **In the event that a manual adjustment must be made (although should not be a common practice), a service appointment and full foundation brake, ASA, and other system component inspection should be conducted as soon as possible to ensure integrity of the overall brake system.**

## IMPORTANT POINTS-DISASSEMBLY

**1. REMOVAL**

**⚠ WARNING**

- **To prevent serious eye injury, always wear safe eye protection when you perform vehicle maintenance or service.**
- **When you work on a spring chamber, carefully follow the service instructions of the chamber manufacturer. Sudden release of a compressed spring can cause serious personal injury.**
- **Block the wheels to prevent the vehicle from moving. Support the vehicle with safety stands. Do not work under a vehicle supported only by jacks. Jacks can slip and fall over. Serious personal injury can result.**

(1) If the brake has a spring brake, compress and lock the spring, so that the brake is released completely. Check that no air pressure remains in the service half of the air chamber.
(2) If it is necessary to raise the vehicle, use a jack and support the vehicle with safety stands.

**⚠ WARNING**
**When you remove a clevis pin that has a spring, hold the spring with pliers. The spring can disengage from the clevis with enough force to cause serious personal injury.**

(3) Remove both clevis pins.
(4) **Remove a conventional pawl or disengage a pull pawl:** Use a screwdriver or equivalent tool to lift the button of a pull pawl assembly at least 1/32-inch from the actuator.

**⚠ CAUTION**
**You must disengage a pull pawl or remove a conventional pawl before rotating the manual adjusting nut, or you will damage the pawl teeth. A damaged pawl will not allow the slack adjuster to automatically adjust brake clearance. Replace damaged pawls before putting the vehicle in service.**

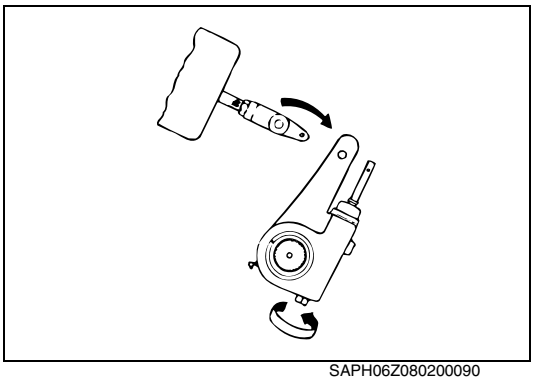
SAPH06Z080200090

(5) Use a wrench to turn the manual adjusting nut in the direction shown in figure. Move the slack adjuster away from the clevis.

(6) Remove the snap ring and washers from the camshaft. Remove the slack adjuster from the camshaft.

(7) Remove the clevis from the push rod if the gap between the clevis and the collar of a "Quick Connect" clevis exceeds 0.060-inch (1.52 mm). You do not have to remove the clevis if it is in good condition.

## 2. DISASSEMBLY

**⚠ WARNING**

**To prevent serious eye injury, always wear safe eye protection when you perform vehicle maintenance or service.**

(1) Cut the clamp and remove it from the boot.
Use a new clamp and boot when you assemble the slack adjuster.

(2) Remove the boot from the housing. Pull the actuator assembly from the housing.

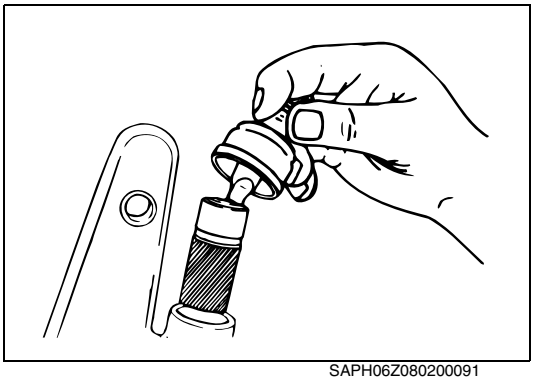
SAPH06Z080200091

(3) Use a small screwdriver to push down on one side of the piston retaining ring to force the ring out of the groove.

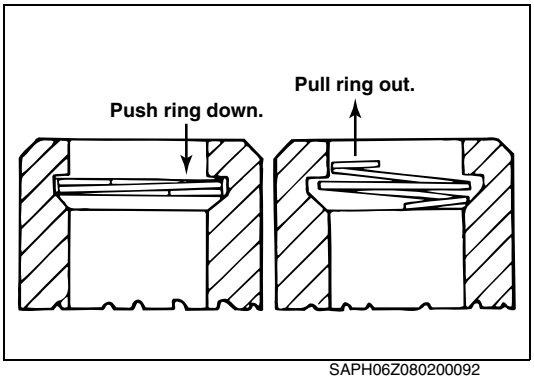

SAPH06Z080200092

(4) Extend the coils of the ring.

(5) Use pliers to unwind the ring and pull it out of the groove.

(6) Use a new ring when you assemble the slack adjuster.

(7) Pull the actuator rod, piston and pin from the actuator.

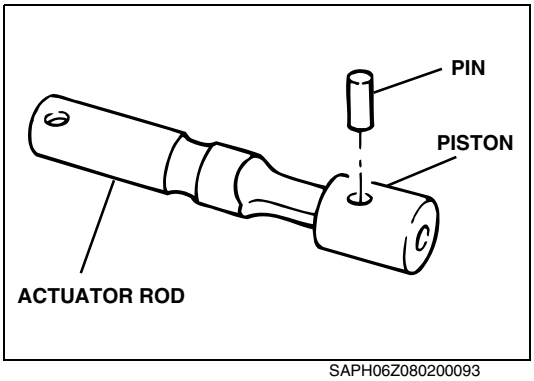

SAPH06Z080200093

(8) Remove the pin from the rod and piston, if necessary.

**NOTICE**

**You do not have to remove the slack adjuster arm bushing unless it is worn or "egg-shaped."**

(9) Inspect the condition and fit of the slack adjuster arm bushing.

(10) If necessary, install a new bushing onto the clevis pin. Use the clevis pin and mallet to drive out the old bushing while you drive in the new bushing.

**NOTICE**
**Steps (11) through (21) apply only to automatic slack adjusters manufactured BEFORE January 1993. The gear set and seals are not serviceable on automatic slack adjusters manufactured AFTER January 1993. Refer to the exploded views on pages (2) and (3) of this manual for more information.**

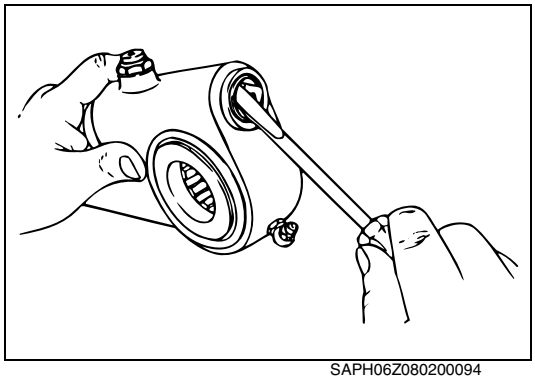
SAPH06Z080200094

(11) Use a small screwdriver to remove the grease seal from around the worm bore.
Discard the seal. Use a new seal when you assemble the slack adjuster.

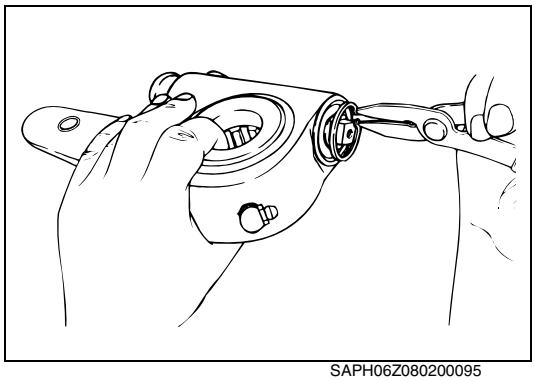
SAPH06Z080200095

(12) Use snap ring pliers to remove the retaining ring from the worm bore.

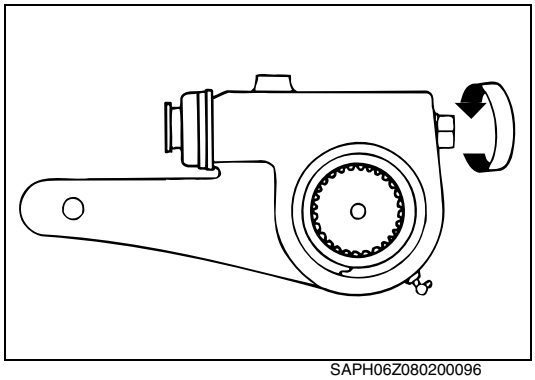
SAPH06Z080200096

(13) Use a wrench to turn the manual adjusting nut and wind the worm out of the bore.

(14) Remove the retaining rings and thrust washers from both sides of the gear.
(15) Fit a small screwdriver into the notch at the end of the retaining ring.
(16) Remove the end of the retaining ring from the groove.

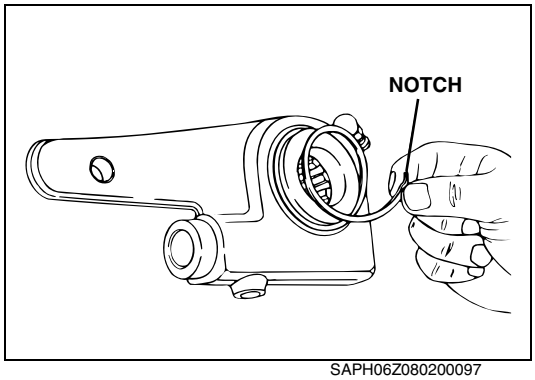

SAPH06Z080200097

(17) Unwind the ring by hand and pull it out of the groove.

(18) Remove the thrust washer.

**⚠ CAUTION**
**Push one seal out of one side of the slack adjuster housing and the other seal out of the other side of the housing to avoid damaging the seals.**

(19) Push the gear out of the housing only far enough to enable you to remove one gear seal.
(20) Push the gear out of the opposite side of the housing and remove the other seal.
(21) Inspect the seals. Discard damaged seals.

## IMPORTANT POINTS-INSPECTION

**1. PREPARE PARTS FOR ASSEMBLY**

**⚠ WARNING**

- **To prevent serious eye injury, always wear safe eye protection when you perform vehicle maintenance or service.**
- **Solvent cleaners can be flammable, poisonous and cause burns. Examples of solvent cleaners are carbon tetrachloride, emulsion-type cleaners and petroleum-based cleaners. To avoid serious personal injury when you use solvent cleaners, you must carefully follow the manufacturer's product instructions and these procedures:**

**a. Wear safe eye protection.**

**b. Wear clothing that protects your skin.**

**c. Work in a well-ventilated area.**

**d. Do not use gasoline, or solvents that contain gasoline. Gasoline can explode.**

**e. You must use hot solution tanks or alkaline solutions correctly. Follow the manufacturer's instructions carefully.**

**⚠ CAUTION**

- **Do not use hot solution tanks or water and alkaline solutions to clean ground or polished parts. Damage to parts will result.**
- **Only use solvent cleaners on metal parts. Damage to parts will result.**

**2. CLEAN PARTS**

(1) Use solvent cleaners to clean all automatic slack adjuster parts that have ground or polished surfaces; for example, the gear, the worm and the inner bores of the housing.
(2) Use soap and water to clean non-metal parts.
(3) Use soft paper or cloth that is free from dirt, oil or abrasives to dry the parts completely.

**3. DRY PARTS AFTER CLEANING**

Dry the parts immediately after cleaning. Dry parts with clean paper or rags, or compressed air.

**4. INSPECT PARTS**

(1) You must carefully inspect all slack adjuster parts, including pawl teeth, for wear and damage before you assemble the slack adjuster.
(2) Replace any part that is worn or damaged.

**5. CORROSION PROTECTION**

**NOTICE**

**Parts must be clean and dry before you lubricate them.**

(1) **If you assemble parts immediately after you clean them:** Lubricate parts with grease to prevent corrosion. Parts must be clean and dry before you lubricate them.
(2) **If you store parts after you clean them:** Apply a corrosion-preventive material. Store parts in a special paper or other material that prevents corrosion.

**6. AUTOMATIC SLACK ADJUSTERS**

**⚠ CAUTION**
**Always replace used clevis pin retainer clips with new ones when servicing the automatic slack adjuster or chamber. Do not reuse clevis pin retainer clips after removing them. Discard used clips. When removed for maintenance or service, clevis pin retainer clips can be bent or "gapped apart" and can lose retention. Damage to components can result.**

Check the clevis pins and the bushing in the arm of the slack adjuster. Replace the pins if they are worn. Replace the bushing if its diameter exceeds 0.531-inch (13.5 mm).

## IMPORTANT POINTS-ASSEMBLY

**⚠ WARNING**
**To prevent serious eye injury, always wear safe eye protection when you perform vehicle maintenance or service.**

**NOTICE**
**Steps 3 through 11 apply only to automatic slack adjusters manufactured BEFORE January 1993. The gear set and seals are not serviceable on automatic slack adjusters manufactured AFTER January 1993. If you are working on a current model, skip to Step (10).**

**1. ASSEMBLY**
(1) Remove any corrosion-preventive material that may have been applied to the parts you will assemble.
(2) Use grease to lubricate the gear bore in the housing.

**⚠ CAUTION**
**Follow Steps (3), (4) and (5) exactly when you install the seals so that the sharp edges of the worm bore will not damage the seals.**

(3) Install the gear straight into the bore in the housing without the seals, keeping one seal groove outside of the housing.
(4) Install a seal into the groove.

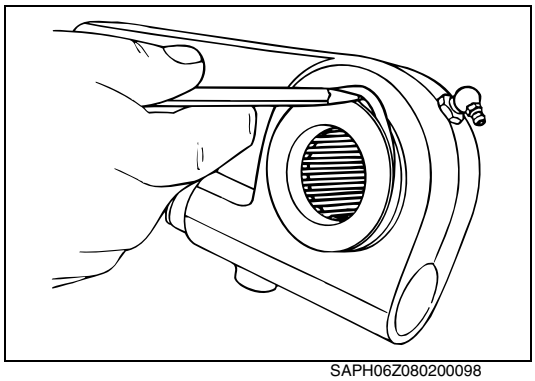
SAPH06Z080200098

(5) Lubricate the seal with grease that meets Meritor's specifications. Compress the seal in its groove. Push the gear into the housing.
(6) Push the gear out of the opposite side of the housing only until the other seal groove is visible. Repeat Steps (4) and (5) to install the second seal.
(7) Lubricate a thrust washer with grease that meets Meritor's specifications. Refer to page BR02-105. Install the washer around the gear.

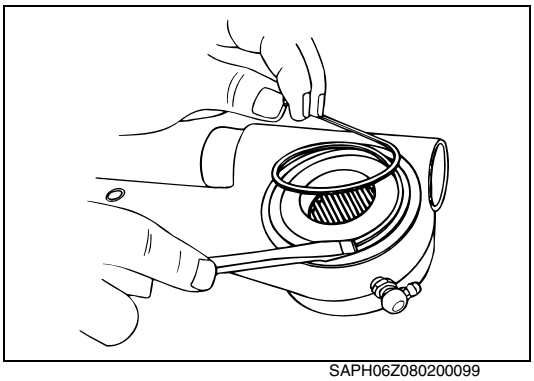
SAPH06Z080200099

(8) Expand the retaining ring coil. Install one end of the coil into the groove in the outer diameter of the gear. Work around the gear and press the coil into the groove.

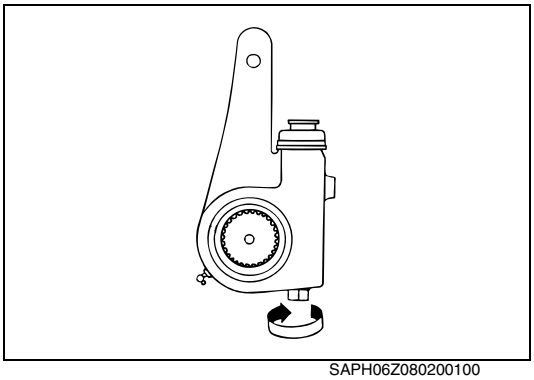
SAPH06Z080200100

(9) Repeat Steps 7 and 8 for the opposite side of the gear.
(10) Install the worm into the bore. Turn the adjusting nut to wind the worm completely into the bore.

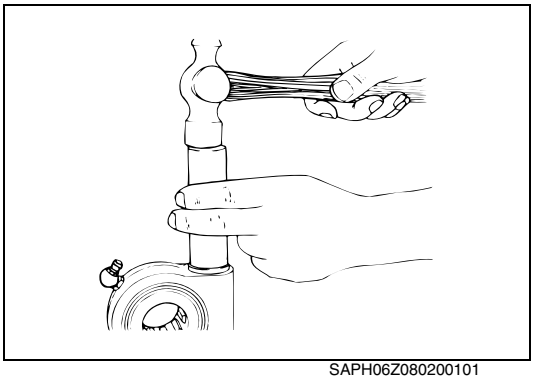
SAPH06Z080200101

(11) Use snap ring pliers to install the retaining ring into the worm bore.

**⚠ CAUTION**

- **Install the seal with the lips OUTSIDE of the bore and the metal retainer INSIDE of the bore to prevent contamination from entering the slack adjuster housing. Damage to components can result.**
- **Do not hit the seal after it reaches the bottom of the bore. Damage to seal will result.**

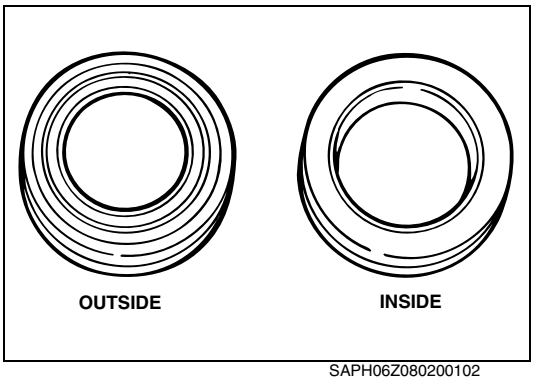

SAPH06Z080200102

(12) Place the seal directly over the worm bore. Use a hammer and 1-3/16-inch (30.2 mm) diameter seal driver to install the seal straight into the bore.

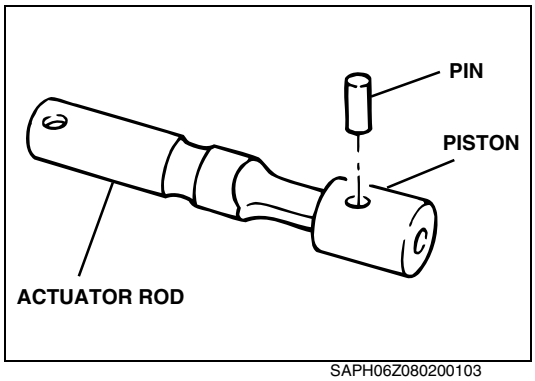


SAPH06Z080200103

(13) If you removed the pin, install it into the rod and piston.

(14) Install the actuator rod and piston assembly into the actuator (adjusting sleeve).

(15) Slide the piston retaining ring over the rod.

(16) Extend the coils of the ring.

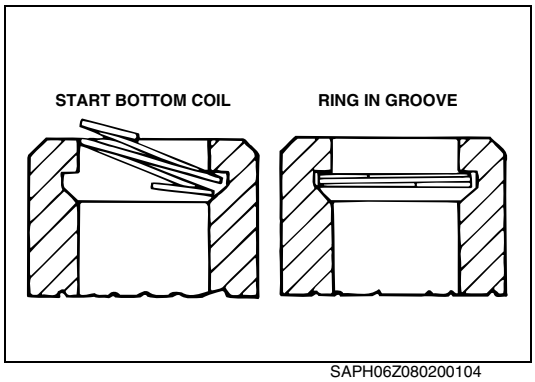


SAPH06Z080200104

(17) Use a small screwdriver to press one end of the ring into the groove.

(18) Keep the coil extended. Press on the ring and work around the groove until the ring is in the groove completely.

(19) Check to ensure that the ring is installed correctly in the groove. You cannot pull the piston out of the actuator if the retaining ring is installed correctly.

(20) Install the actuator assembly into the housing so that the actuator slides along the worm splines.

(21) Slip the boot over the actuator rod.

**NOTICE**

**Do not seal the boot to the tapered part of the actuator rod.**

- **If the rod has a groove:** The top of the boot must fit into the groove.
- **If the rod does not have a groove:** Use silicone sealant to seal the top of the boot to the round part of the rod.

(22) Fasten the bottom of the boot to the housing with a retaining clamp.

(23) **Conventional Pawl:** Install the pawl assembly into the housing. Tighten the capscrew to a torque of 15-20 lb-ft (20-27 N·m).

(24) **Pull Pawl:** Remove the screwdriver or equivalent tool. The pull pawl will re-engage automatically.

(25) Use a grease gun to lubricate the slack adjuster through the grease fitting. If necessary, install a camshaft into the slack adjuster gear to minimize grease flow through the gear holes.

(26) Apply lubrication that meets Meritor's specifications until new grease purges from around the camshaft splines and from the pawl assembly. Refer to page BR02-105.

**⚠ CAUTION**

**In Step (28) turn the adjusting nut only in the direction shown in figure. If you turn the adjusting nut in the opposite direction while the pawl is installed, you will damage pawl teeth.**
**Damaged teeth prevent automatic adjustment.**
**Replace damaged pawls before putting the vehicle in service.**

(27) Use a torque wrench that measures lb-in.

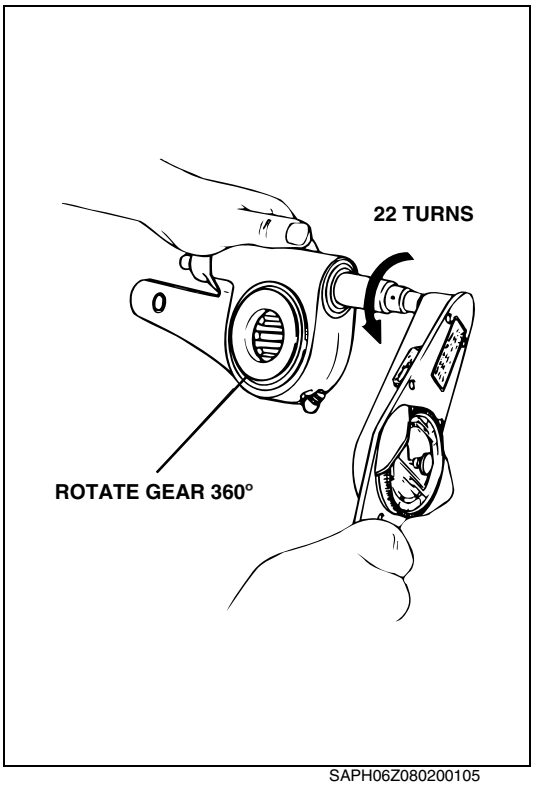


SAPH06Z080200105

(28) As you turn the adjusting nut in the direction shown in figure, read the torque scale and rotate the gear 360 degrees (22 turns of the wrench).

(29) The torque value must remain less than 25 lb-in (2.83 N·m) during the complete 360-degree rotation of the gear.

(30) **If the torque value remains less than 25 lb-in (2.8 N·m):** The slack adjuster is working correctly.

(31) **If the torque value exceeds 25 lb-in (2.8 N·m):** The slack adjuster is not working correctly.
Disassemble the slack adjuster.

- Check that the slack adjuster is assembled correctly.
- Check that parts are aligned correctly.

# INSTALLING THE SLACK ADJUSTER ONTO THE CAMSHAFT

EN06Z0802H200010

## 1. INSTALLATION

**⚠ WARNING**

- **To prevent serious eye injury, always wear safe eye protection when you perform vehicle maintenance or service.**
- **Block the wheels to prevent the vehicle from moving. Support the vehicle with safety stands. Do not work under a vehicle supported only by jacks. Jacks can slip and fall over. Serious personal injury can result.**

(1) Check the camshaft and bushings and seals for wear and corrosion.
(2) Turn the camshaft by hand to check for smooth operation.
(3) Repair or replace parts as required.
(4) Apply the service brake and spring brake several times. Check that the chamber return spring retracts the push rod quickly and completely. If necessary, replace the return spring or the air chamber.
(5) The new automatic slack adjuster must be the same length as the one you are replacing.
Table below shows the length of slack adjuster that is used with each brake chamber size.

**Chamber and Automatic Slack Adjuster Sizes**

| Length of Slack Adjuster (Inches) | Size of Chamber (Square Inches) |
|---|---|
| 5 | 9*, 12*, 16, 20, 24, 30 |
| 5-1/2 | 9*, 12*, 16, 20, 24, 30, 36 |
| 6 | 24, 30, 36 |
| 6-1/2 | 30, 36 |
| *Use an auxiliary spring on slack adjusters used with these size chambers. A size 9 or 12 chamber return spring cannot supply enough spring tension to completely retract the slack adjuster. | |

(6) Place blocks in front of and behind the vehicle's wheels to prevent it from moving.

**⚠ WARNING**
**When you work on a spring chamber, carefully follow the service instructions of the chamber manufacturer. Sudden release of a compressed spring can cause serious personal injury.**

(7) If the brake has a spring brake, compress and lock the spring to completely release the brake. No air pressure must remain in the service half of the air chamber.

**⚠ CAUTION**
**Most Meritor automatic slack adjusters manufactured after January 1990 have lubrication holes in the gear splines. Do not operate the actuator before you install the slack adjuster.**
**Lubricant can pump through the holes and onto the splines. Damage to components can result.**

(8) If the automatic slack adjuster gear has a 10-tooth spline, apply anti-seize compound to the slack adjuster and cam splines. Use Meritor specified O-637, Southwest SA 8249496 or equivalent lubricants.

**NOTICE**

**Install the slack adjuster so that you can remove a conventional pawl or disengage a pull pawl when you adjust the brake.**

(9) Install the slack adjuster onto the camshaft. Position the slack adjuster so that you can remove the pawl when you adjust the brake.

(10) If necessary, install spacing washers and the snap ring at a maximum clearance of 0.062-inch (1.57 mm).

(11) Install the clevis onto the push rod. Do not tighten the jam nut against the clevis.

**⚠ CAUTION**

**You must disengage a pull pawl or remove a conventional pawl before rotating the manual adjusting nut, or you will damage the pawl teeth. A damaged pawl will not allow the slack adjuster to automatically adjust brake clearance. Replace damaged pawls before putting the vehicle in service.**

(12) Disengage the pawl. Turn the manual adjusting nut to align the holes in the slack adjuster arm and the clevis.

(13) **If the slack adjuster has a welded clevis:** Apply anti-seize compound to the two clevis pins.
Install the clevis pins through the clevis and the slack adjuster.

(14) **If the slack adjuster has a threaded clevis:** Refer to page BR02-99.

**⚠ CAUTION**

**Always replace used clevis pin retainer clips with new ones when servicing the automatic slack adjuster or chamber. Do not reuse clevis pin retainer clips after removing them. Discard used clips. When removed for maintenance or service, clevis pin retainer clips can be bent or "gapped apart" and can lose retention. Damage to components can result.**

(15) Install new clevis pin retainer clips to hold the clevis in place.

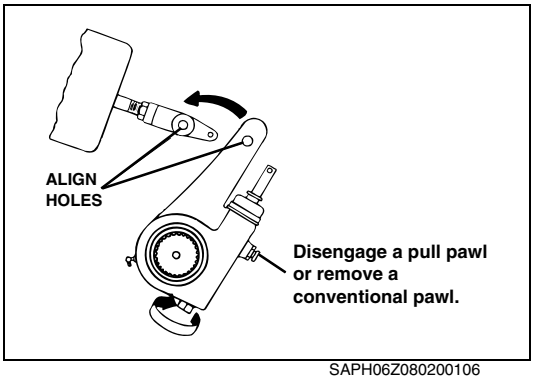


SAPH06Z080200106

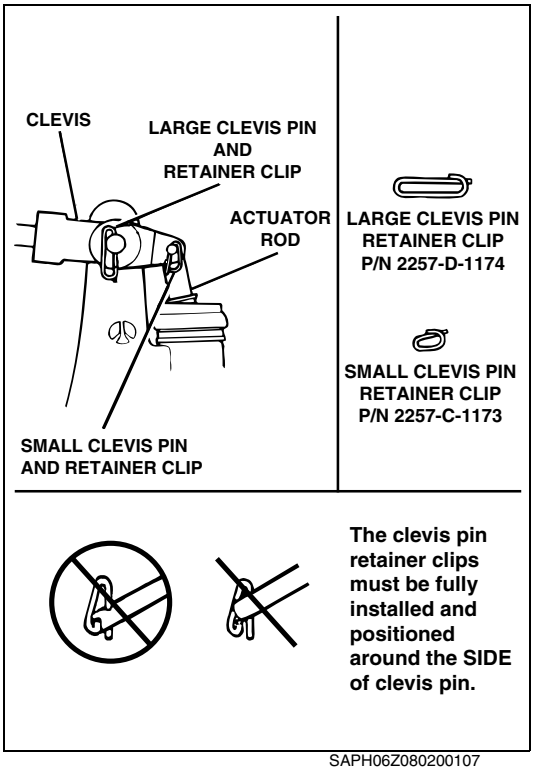


SAPH06Z080200107

# CHECK & ADJUSTMENT

EN06Z0802H200011

## CHECK BRAKE CHAMBER PUSH ROD STROKE AND ADJUST THE CLEVIS POSITION

**⚠ WARNING**
**To prevent serious eye injury, always wear safe eye protection when you perform vehicle maintenance or service.**

**NOTICE**
**You cannot adjust the clevis position on a chamber push rod that is equipped with a welded clevis.**

There are two methods you can use to adjust the clevis position on a chamber push rod that is equipped with a threaded clevis:

- The Brake Slack Adjuster Position (BSAP) method for standard and long stroke chambers.
- Meritor's automatic slack adjuster template method for **standard stroke chambers only**.

**1. BRAKE SLACK ADJUSTER POSITION (BSAP) METHOD**
When installing the automatic slack adjuster, verify that the BSAP dimension of the chamber matches the table in figure.

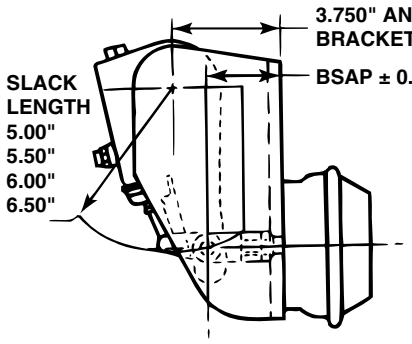


| SLACK ADJ. SIZE | ± 0.125" BSAP | LONG STROKE |
|---|---|---|
| 5.00" | 2.75" | - |
| 5.50" | 2.75" | 2.25" |
| 6.00" | 2.75" | - |
| 6.50" | 2.62" | - |

**Correct position of automatic slack adjuster: 3.750" and 3.812" offsets only. For other bracket offsets, refer to the vehicle manufacturer's specifications.**

SAPH06Z080200108

**2. AUTOMATIC SLACK ADJUSTER TEMPLATES**
Order the correct automatic slack adjuster template from Meritor's Customer Service Center at 800-535-5560.

**⚠ CAUTION**
**There are five different installation templates for Meritor automatic slack adjusters. The templates are NOT interchangeable. You MUST use the correct template and you MUST adjust the clevis position as described below. If you use the wrong template and install the clevis in the wrong position, the slack adjuster will not adjust the brake correctly. If the slack adjuster under-adjusts, then stopping distances are increased. If the slack adjuster over-adjusts, then the linings may drag and damage the brake.**

### 3. MEASURE THE SLACK ADJUSTER

**NOTICE**
**For long stroke chambers, use the BSAP method to measure the automatic slack adjuster.**

(1) Use the correct Meritor automatic slack adjuster template to measure the length of the slack adjuster. The marks by the holes in the small end of the template indicate the length of the slack adjuster.

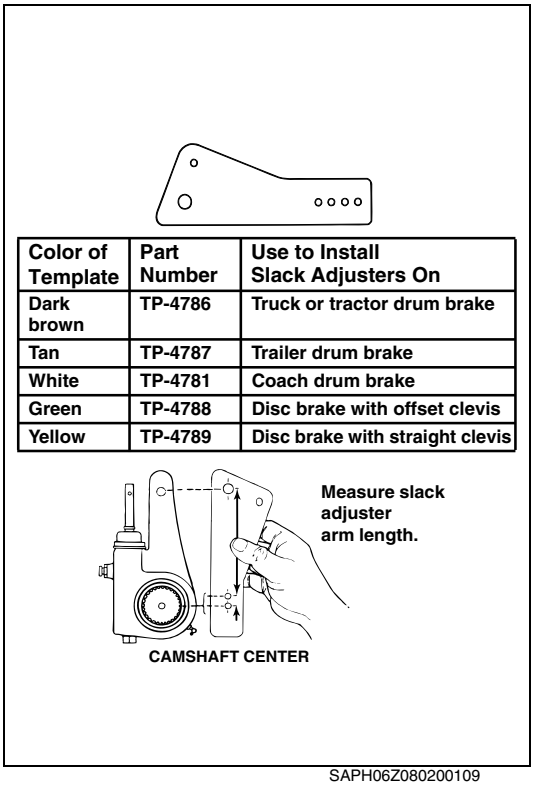


SAPH06Z080200109

### 4. INSTALL A THREADED CLEVIS

(1) Install the large clevis pin through the large holes in the template and the clevis.
(2) Select the hole in the template that matches the length of the slack adjuster. Hold that hole on the center of the camshaft.
(3) Look through the slot in the template. If necessary, adjust the position of the clevis until the small hole in the clevis is completely visible through the template slot.

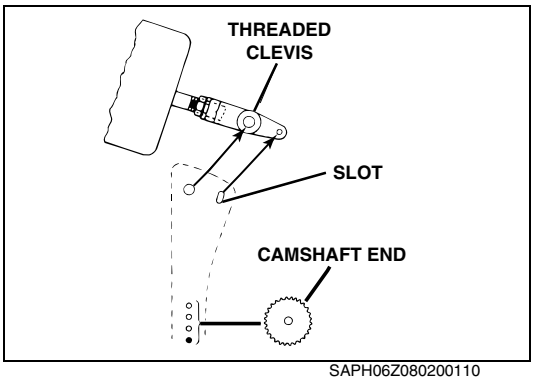


SAPH06Z080200110

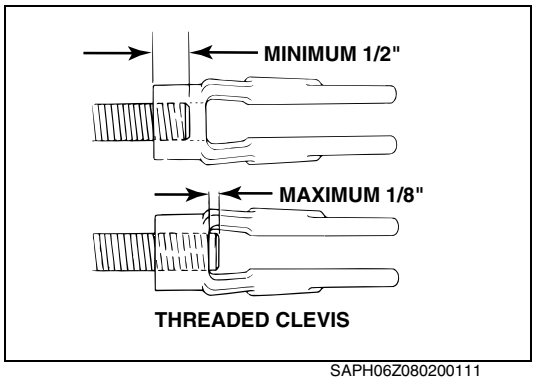


SAPH06Z080200111

(4) Check for these specifications:

- Thread engagement between the clevis and the push rod must be at least 1/2-inch (12.7 mm).
- The push rod must not extend through the clevis more than 1/8-inch (3.18 mm). If necessary, cut the push rod, or install a new push rod with a new air chamber.

(5) Tighten the jam nut against the clevis to torque specifications.

**Jam Nut Torque Specifications**

| Threads | Torque |
|---|---|
| 1/2-20 | 20-30 lb-ft (27-41 N·m) |
| 5/8-18 | 35-50 lb-ft (48-68 N·m) |

## 5. FREE STROKE MEASUREMENT

**⚠ CAUTION**
**You must disengage a pull pawl or remove a conventional pawl before rotating the manual adjusting nut, or you will damage the pawl teeth. A damaged pawl will not allow the slack adjuster to automatically adjust brake clearance. Replace damaged pawls before putting the vehicle in service.**

**NOTICE**
**During preventive maintenance on an in-service brake, check both the free stroke as described below and the adjusted chamber stroke as described on page BR02-103.**

On some applications, you may find the in-service free stroke to be slightly longer than specified in Step (5). However, this is not necessarily a concern, as long as the adjusted chamber stroke is within the limits shown in the Commercial Vehicle Safety Alliance (CVSA) charts on page BR02-104.

(1) Disengage a pull pawl or remove a conventional pawl.
(2) Turn the adjusting nut in the direction shown in figure until the linings touch the drum, and then turn the adjusting nut in the opposite direction:

- 1/2 turn for drum brakes
- 3/4 turn for disc brakes

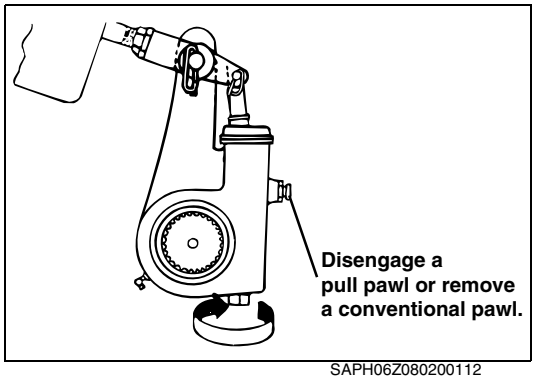


SAPH06Z080200112

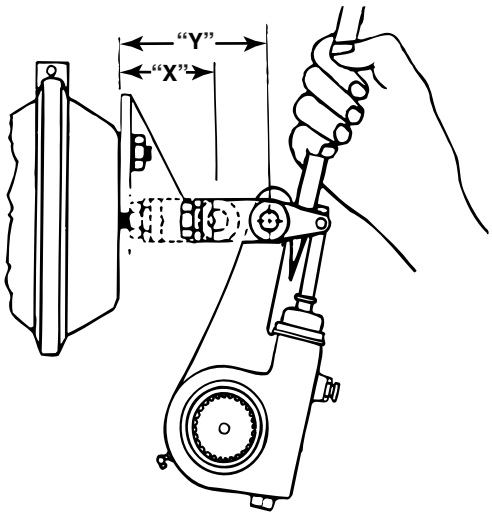


SAPH06Z080200113

(3) Measure the distance from the center of the large clevis pin to the bottom of the air chamber while the brake is released. **Refer to "X" in figure**.

(4) Use a pry bar to move the slack adjuster so that the linings are against the drum (applying the brakes). Measure the same distance again while the brakes are applied. **Refer to "Y" in figure**.

**⚠ CAUTION**
**Do not set free stroke shorter than specifications. If free stroke is too short, linings can drag and damage the brake.**

(5) The difference between measurement "X" and measurement "Y" is the free stroke, which sets the clearance between the linings and drum.
Free stroke must be within the following specifications.

- **Drum Brakes:**
  **1/2-inch-5/8-inch (12.7-15.9 mm)**
- **Disc Brakes:**
  **3/4-inch-7/8-inch (19.1-22.2 mm)**

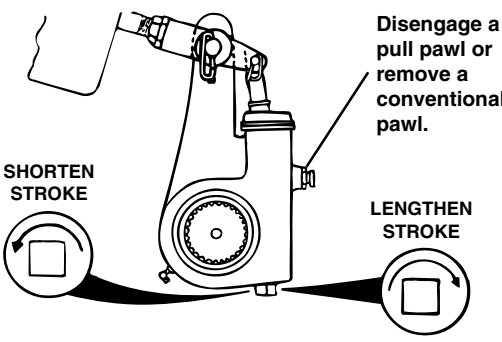


SAPH06Z080200114

(6) If it is necessary to adjust the stroke, turn the adjusting nut 1/8 turn in the direction shown in figure and check the stroke again. Continue to measure and adjust the stroke until it is adjusted correctly.

(7) Release a pull pawl or install a conventional pawl.

**⚠ WARNING**
**When you work on a spring chamber, carefully follow the service instructions of the chamber manufacturer. Sudden release of a compressed spring can cause serious personal injury.**

(8) If the brake has spring chambers, carefully release the spring.
(9) Test the vehicle to ensure that the brake system is operating correctly before you return the vehicle to service.

## COMMERCIAL VEHICLE SAFETY ALLIANCE (CVSA) GUIDELINES TO MEASURE PUSH ROD TRAVEL (ADJUSTED CHAMBER STROKE)

Use the following procedures to check in-service push rod travel (adjusted chamber stroke) on truck or tractor air brakes with automatic slack adjusters.

Hold the ruler parallel to the push rod and measure as carefully as possible. An error in measurement can affect CVSA re-adjustment limits, which state that "any brake 1/4-inch or more past the re-adjustment limit, or any two brakes less than 1/4-inch beyond the re-adjustment limit will be cause for rejection."

**⚠ WARNING**

- **To prevent serious eye injury, always wear safe eye protection when you perform vehicle maintenance or service.**
- **When you work on a spring chamber, carefully follow the service instructions of the chamber manufacturer. Sudden release of a compressed spring can cause serious personal injury.**

**1. MEASURE PUSH ROD TRAVEL (ADJUSTED CHAMBER STROKE)**

(1) The engine must be **OFF**. If the brake has spring chambers, carefully release the spring.

(2) Check the gauges in the cab to ensure that air pressure in the tanks is 100 psi (689 kPa).

(3) Determine the size and type of brake chamber you are inspecting.

(4) With the brakes released, mark the push rod where it exits the chamber.
Measure and record the distance.

(5) Have another person apply and hold the brakes one full application.

(6) Measure push rod travel distance (adjusted chamber stroke) from where the push rod exits the brake chamber to your mark on the push rod. Measure and record the distance.

(7) **To determine push rod travel (adjusted chamber stroke):** Subtract the measurement you obtained in Step (4) from the measurement you obtained in Step (6). The difference is the push rod travel (adjusted chamber stroke).

- Push rod travel (adjusted chamber stroke) must not be greater than the stroke length shown in the CVSA reference charts for the size and type of air chamber you are inspecting.
- If push rod travel (adjusted chamber stroke) is greater than the maximum stroke shown in the CVSA reference charts, inspect the slack adjuster and replace it if necessary.

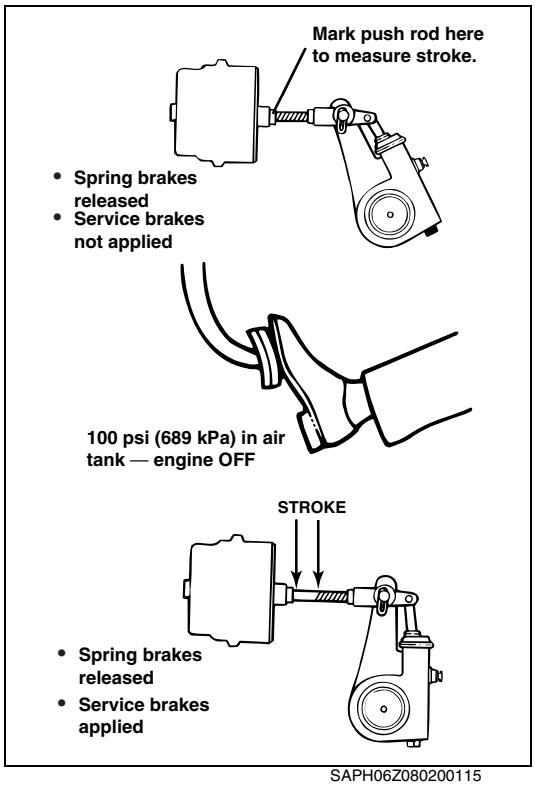


SAPH06Z080200115

## COMMERCIAL VEHICLE SAFETY ALLIANCE (CVSA) NORTH AMERICAN OUT-OF-SERVICE CRITERIA REFERENCE CHARTS

**NOTICE**

**A brake found at the adjustment limit is not a violation.**

**"Standard Stroke" Clamp-Type Brake Chamber Data**

| Type | Outside Diameter (inches) | Brake Adjustment Limit (inches) | |
|---|---|---|---|
| 6 | 4-1/2 | 1-1/4 | Should be as short as possible without lining to drum contact |
| 9 | 5-1/4 | 1-3/8 | |
| 12 | 5-4/16 | 1-3/8 | |
| 16 | 6-3/8 | 1-3/4 | |
| 20 | 6-25/32 | 1-3/4 | |
| 24 | 7-7/32 | 1-3/4 | |
| 30 | 8-3/32 | 2 | |
| 36 | 9 | 2-1/4 | |
| * For 3" maximum stroke type 24 chambers | | | |

**"Long Stroke" Clamp-Type Brake Chamber Data**

| Type | Outside Diameter (inches) | Brake Adjustment Limit (inches) | |
|---|---|---|---|
| 16 | 6-3/8 | 2.0 | Should be as short as possible without lining to drum contact |
| 20 | 6-25/32 | 2.0 | |
| 24 | 7-7/32 | 2.0 | |
| 24* | 7-7/32 | 2.5 | |
| 30 | 8-3/32 | 2.5 | |

**1. ANTI-SEIZE COMPOUND**

Meritor lubricant specification O-637 (part number 2297-U-4571) is a corrosion control grease. Do not mix this grease with other greases. This compound is also available from the Southwest Petro-Chemical Division of Witco Chemical Corporation, 1400 South Harrison, Olathe, KS 66061, as "Corrosion Control," part number SA 8249496.

- Use anti-seize compound on the clevis pins of all slack adjusters.
- Also use anti-seize compound on the automatic slack adjuster and cam splines if the slack adjuster gear has no grease groove and holes around its inner diameter.

## LUBRICANTS

**Conventional Automatic Slack Adjuster Grease Specifications**

| Components | Meritor Specification | NLGI Grade | Grease Type | Outside Temperature |
|---|---|---|---|---|
| Automatic Slack Adjuster | O-616-A | 1 | Clay Base | Down to -40°F (-40°C) |
| | O-692 | 1 and 2 | Lithium Base | Down to -40°F (-40°C) |
| | O-645 | 2 | Synthetic Oil, Clay Base | Down to -65°F (-54°C) |
| Clevis Pins | Any of Above | See Above | See Above | See Above |
| | O-637 | 1-1/2 | Calcium Base | Refer to the grease manufacturer's specifications for the temperature service limits. |
| | O-641 | — | Anti-Seize | |

## MAINTENANCE

**1. AT BRAKE RELINE**

(1) Before you perform brake maintenance, check the free stroke and the adjusted chamber stroke as described on BR02-103.

(2) If the free stroke is not correct, refer to the Diagnostics table on page BR02-86 to correct the stroke before you adjust the chamber stroke.

(3) Inspect the boot for cuts or other damage. If the boot is cut or damaged, remove the pawl and inspect the grease.

(4) If the grease is in good condition, replace the damaged boot with a new boot.

(5) Use a grease gun to lubricate the slack adjuster through the grease fitting. If necessary, install a camshaft into the slack adjuster gear to minimize grease flow through the gear holes.

(6) Lubricate until new grease purges from around the inboard camshaft splines and from the pawl assembly.

(7) Measure the gap between the clevis and the collar on a "Quick Connect" clevis. Replace the clevis if the gap exceeds 0.060-inch (1.52 mm).

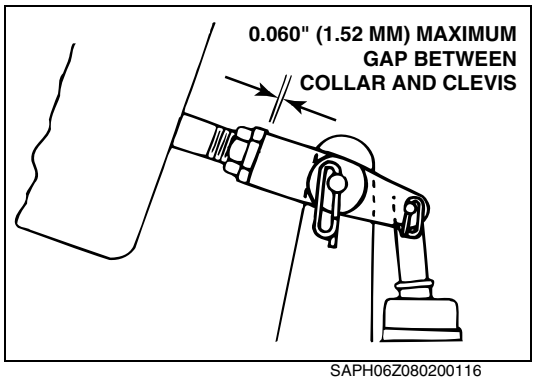


SAPH06Z080200116

# ABS (ABS : HYDRAULIC (E VERSION)) BR03-001

**ABS ..... BR03-2**
OVERVIEW ..... BR03-2
COMPOSITION AND OPERATION ..... BR03-3
FUNCTION ..... BR03-6
PRECAUTIONS WHEN DRIVING VEHICLES EQUIPPED WITH ABS ..... BR03-7
OVERVIEW AND FUNCTION ..... BR03-8

# ABS

## OVERVIEW

EN06Z0803C100001

ABS is a system that makes effective use of the friction between the tires and the road surface to maintain vehicle stability while the brakes are being applied and for stopping the vehicle.

Applying the brakes forcefully on a slippery road surface can cause the wheels to be locked, due to excessive braking force. This causes the vehicle to lose stability because the locked wheels lose resistance in the lateral direction. More specifically, if the front wheels are locked, it becomes impossible to steer the vehicle, and if the rear wheels are locked, the rear of the vehicle may fishtail from side to side.

Also, when wheel-locking occurs, it is not possible to make effective use of friction between the tires and the road surface. This may cause the braking distance to be increased.

ABS uses wheel sensors mounted on the axles to constantly monitor the rotation of the wheels. If any of the wheels is starting to lock up, the ABS ECU sends signals to the ABS modulator and immediately adjusts the brake pressure to prevent wheel-locking.

In this way, ABS maintains the stability of the vehicle while stopping by making effective use of the friction between the tires and the road surface.

# COMPOSITION AND OPERATION

EN06Z0803C100002

The ABS system is comprised of sensor rings mounted on the wheels, the ABS ECU, which receives signals from the wheel sensors that monitor the rotational speed of the wheels and outputs control signals to maintain the appropriate braking force; ABS modulator, which increase or decrease the braking force, based on the control signals; the warning light, which gives an alarm if the system malfunctions; the piping, wire harnesses, etc., that link together the various units that compose the system.

Pulse signals transmitted by the sensor rings mounted on the wheel hubs, rotated together with the wheels, and the wheel sensors mounted near sensor ring on the axles are sent to the ABS ECU. The ABS ECU then calculates the wheels' rotational speed, acceleration, deceleration, and amount of slippage, based on these signals.

If the limit values for the wheel's deceleration, or slippage ratio are exceeded, the ABS ECU immediately transmits signals to the ABS modulator to adjust any excess braking force.

- ABS system operates as following table.

| | FRONT AXLE | REAR AXLE |
|---|---|---|
| **CONTROL SYSTEM** | Independently control right and left wheels | Independently control right and left wheels |

## 1. SYSTEM COMPOSITION DIAGRAM

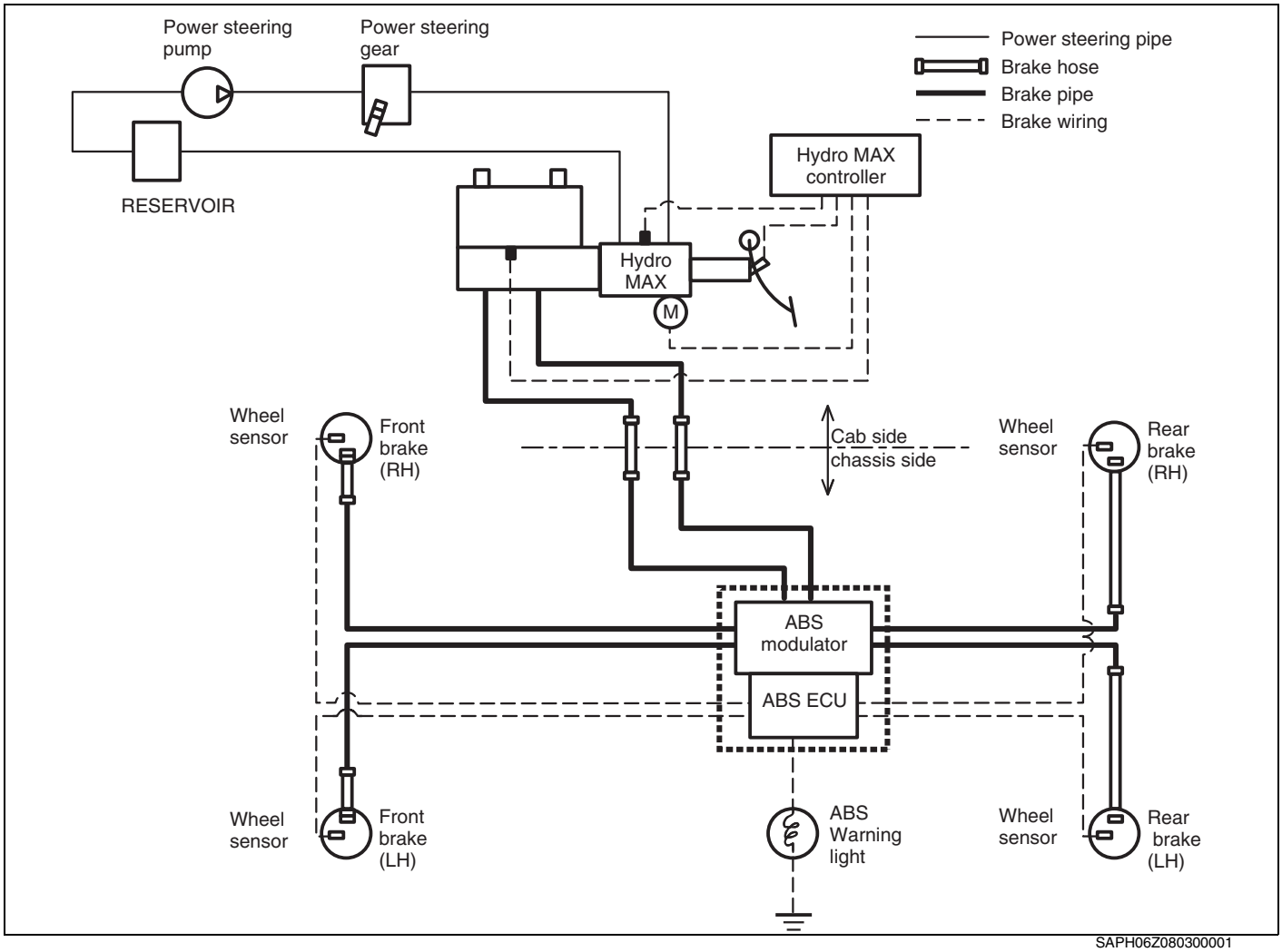


SAPH06Z080300001

## 2. ABS CONTROL FLOWCHART

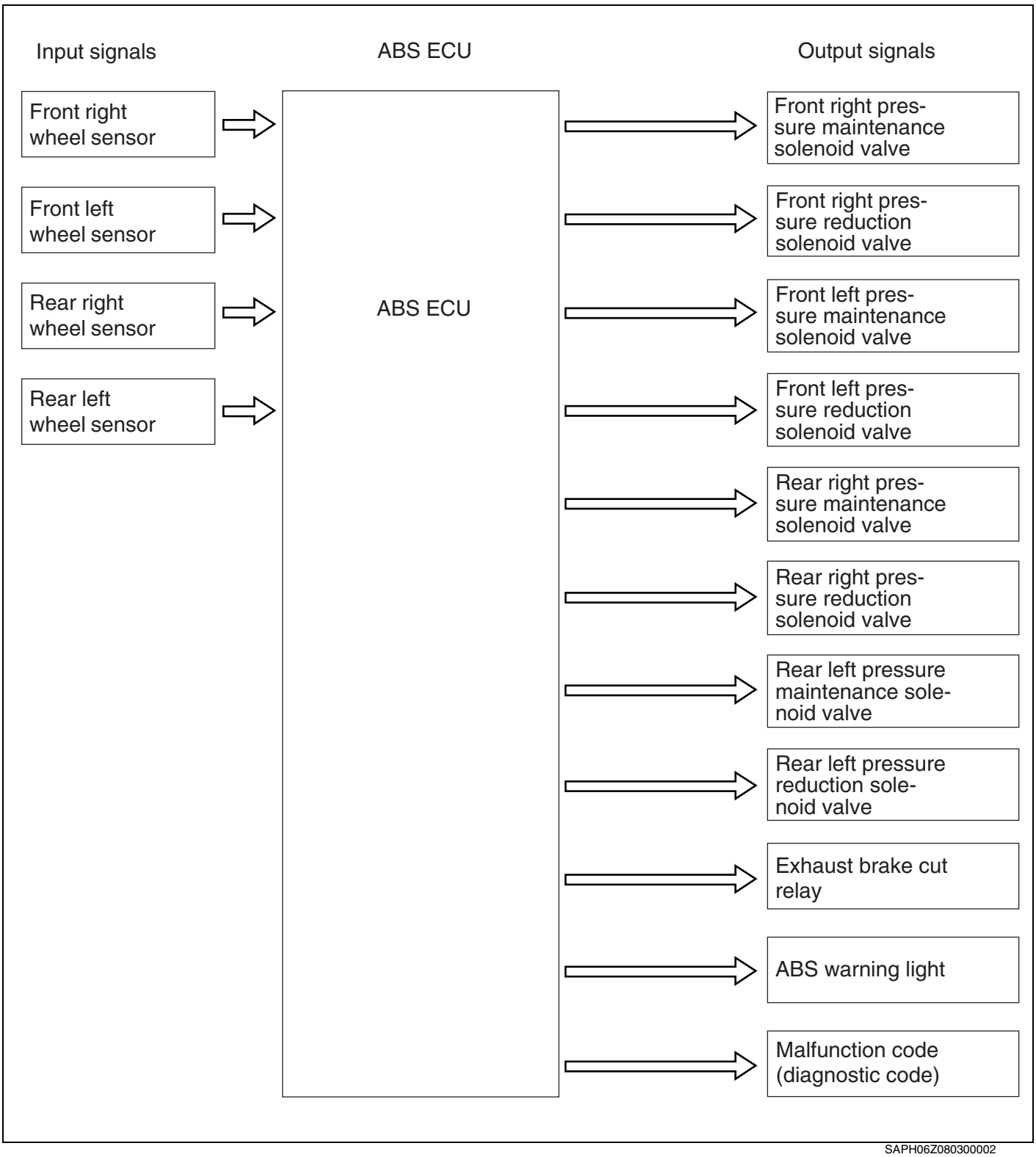


SAPH06Z080300002

## BASIC PRINCIPLE

Based on its relationship with the slip ratio, which is determined from the wheels' rotational speed and the vehicle's speed, ABS controls the brake force so that it will be most effective.

When the driver applies the brakes, the rotation of the wheels is controlled and the vehicle speed drops. However, the momentum of the vehicle attempts to push it forward further even though the rotation of the wheels is being braked. At this point, slipping will occur if there is a gap between the wheels' rotational speed and the vehicle's speed. The slip ratio is a value that indicates the rate of slippage.

$$\text{Slip ratio} = \frac{\text{Vehicle's speed} - \text{Wheel's rotational speed}}{\text{Vehicle's speed}} \times 100\ \%$$

**Slip ratio 0 % : No slipping between the wheels and the road surface**

**100 % : Wheels locked**

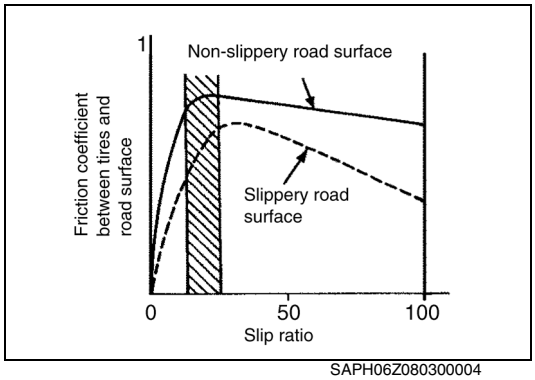


SAPH06Z080300004

The graph shown at left shows the relationship between the friction coefficient of the tires and of the road surface and the slip ratio.

In an ABS-equipped vehicle, the brake force is controlled to ensure that it is within the range where the friction coefficient is high (shaded portion of the graph) without locking the wheels. This ensures efficient braking performance.

## OPERATION

The ABS ECU calculates the wheel speed and wheel acceleration speed for each of the 4 wheels, from 4 wheel sensor signals, and determines the wheel slip conditions. And depending on these conditions, control signals are output to the ABS actuator solenoid valves in 3 modes (pressure increase, pressure maintenance, and pressure reduction). Control signals are output independently to the front and rear wheels and to the left and right wheels.

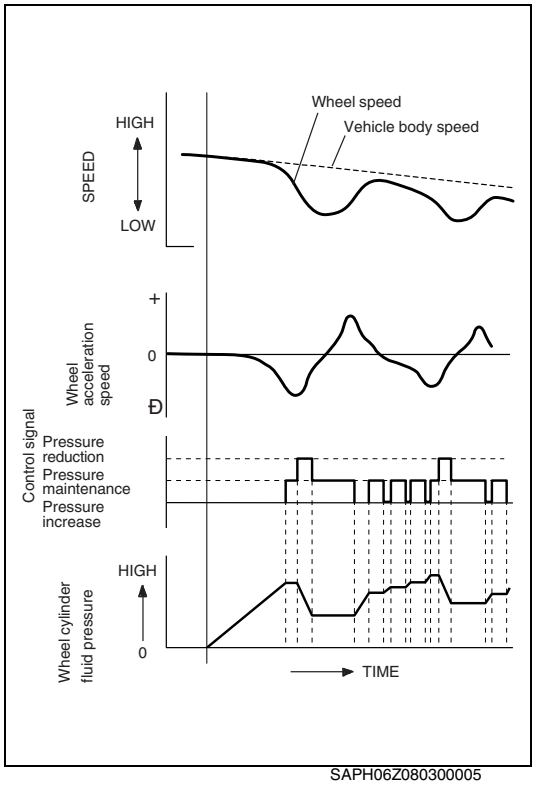


SAPH06Z080300005

# FUNCTION

EN06Z0803C100003

## FAIL-SAFE FUNCTION

This ABS system is equipped with a fail-safe function that causes the ABS warning light on the instrument panel to light and to restore the normal (non-ABS) brake system, should an ABS malfunction occur.
Note that the ABS system consists of two independent circuits. Should a malfunction occur for whatever reason in the electrical circuits, that system's ABS is switched off and the normal brake system is restored while ABS control continued for the other system. This configuration is designed to minimize the effects of any malfunction on ABS function.

## EXHAUST BRAKE CONTROL FUNCTION

The ABS of this vehicle is equipped with a function that controls the exhaust brake while ABS is operating. If the exhaust brake is applied independently or in conjunction with the service brake on a road surface with an abnormally low friction coefficient, the drive wheels may lock. This ABS prevents the drive wheels from locking in such situations by automatically releasing the exhaust brake, if necessary, during ABS operation.

# PRECAUTIONS WHEN DRIVING VEHICLES EQUIPPED WITH ABS

EN06Z0803F100001

Electronically, ABS uses the coefficient of friction (the amount of traction) between the tires and the road surface to monitor the speed of each wheel. If one or more wheels indicates the possibility of locking, resulting in fishtailing or other loss of stability, ABS enables the vehicle to be brought to a stop. Even with ABS, however, a driver must operate the vehicle in a safe manner and recognize the following points with respect to the operation of ABS.

| CHECK POINTS | REMEDIAL ACTIONS |
|---|---|
| • Even with ABS, the braking distance on a wet or slippery road will be longer than on a dry road, and if the road surface is covered with ice, snow or gravel, the braking distance will be even greater. | • Even with ABS, always drive safely, taking into consideration the road and traffic conditions and the condition of your tires, including tire type and tire wear. Always keep a safe distance from any vehicle being driven in front of you. |
| • ABS does not operate when the vehicle is starting, accelerating or turning, and will not assist in maintaining directional stability or steerability or in shortening the braking distance.<br>• Even if the ABS is operational, where the coefficient of friction is very low, such as on an icy roadway, skidding, inability to steer, and instability may occur because of insufficient traction by the tires. | • If engine braking causes instability or fishtailing, the clutch should be engaged or the transmission shifted to neutral, to prevent the application of the engine braking to the drive wheels. |
| • Where engine braking, as a result of downshifting, occurs on a surface with a low coefficient of friction, such as ice, the drive wheels may lock, causing fishtailing or vehicle instability. ABS does not operate unless the brake pedal is applied. | • Vibrations and noise during the operation of ABS are not malfunctions. Remain calm and continue to steer the vehicle in an appropriate manner. |
| • When ABS is activated, the driver may experience a small amount of vibration (especially if the road surface between the left and right tires is different) and difficulty in steering. Also, the operation of the ABS may generate some noise. | • If the warning light lights up again when you reach a speed of about 6 km/h (4 mile/h), the ABS system may not be functioning properly. Have it inspected and repaired if necessary. *The warning light can be reset by turning off the engine while the vehicle is at rest. If the warning light fails to go out after the engine is restarted and the speed indicated above is reached, or if it lights frequency while the vehicle is being driven, the ABS must be inspected. |
| • The ABS warning light will come on when you turn the starter switch to the "on" position. It stays on briefly and then turns off automatically. If the light does not come on, have your vehicle inspected and serviced immediately at your nearest Hino service dealer. | |

• <u>OTHER CHECKPOINTS REGARDING HANDLING</u>

1. When washing the vehicle, take care not to direct high-pressure streams of water at the ABS modulator, harnesses, or connectors. Also, under no circumstances should the ABS ECU or electrical relays be exposed to water.
2. Be very careful not to damage the ABS wire harness when removing snow, ice, mud or other material from the outside or underside of the vehicle.
3. All electronic and radio equipment installed on the vehicle must be mounted as far away from the ABS ECU and wire harness as possible. Installation of certain electronic and radio equipment can also cause the ABS ECU to malfunction. All such equipment must also conform to all applicable laws. If you wish to install a radio or other electronic equipment, please contact your Hino service representative.

SAPH06Z080300006

# OVERVIEW AND FUNCTION

EN06Z0803C100004

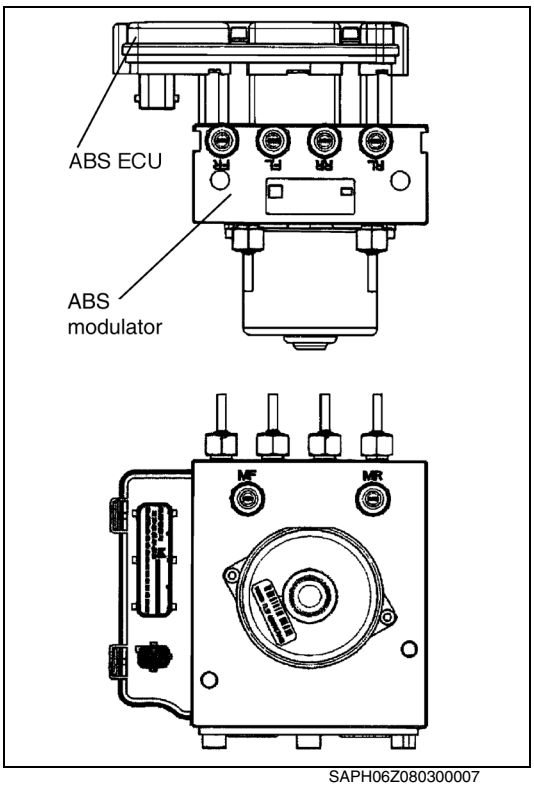


SAPH06Z080300007

## ABS ECU (INTEGRATED WITH ABS MODULATOR)

Based on pulse signals from the wheel sensors, the ABS ECU mounted in the vehicle calculates and evaluates the slip ratio and the acceleration/deceleration speed of the wheels. Based on the results, it sends signals to the modulator assembly as necessary, causing them to operate and apply the brakes to maintain the slippage of the wheels within the optimal range.
During braking, the fluid pressure applied to the brake cylinder is regulated to prevent the wheels from locking. The brakes are applied so as to maintain the slippage of the wheels within the optimal range.
Regardless of whether the vehicle is stopped or being driven, and whether or not the brakes are being applied, the circuit consisting of the wheel sensors, modulator assembly, ABS ECU, and wire harnesses are constantly being checked by the ABS ECU's fail-safe circuit. If some sort of malfunction occurs, the fail-safe circuit warns the driver by lighting the ABS warning light. At the same time, the ABS system that is experiencing the malfunction is shut off and braking is restored to normal (non-ABS) operation.

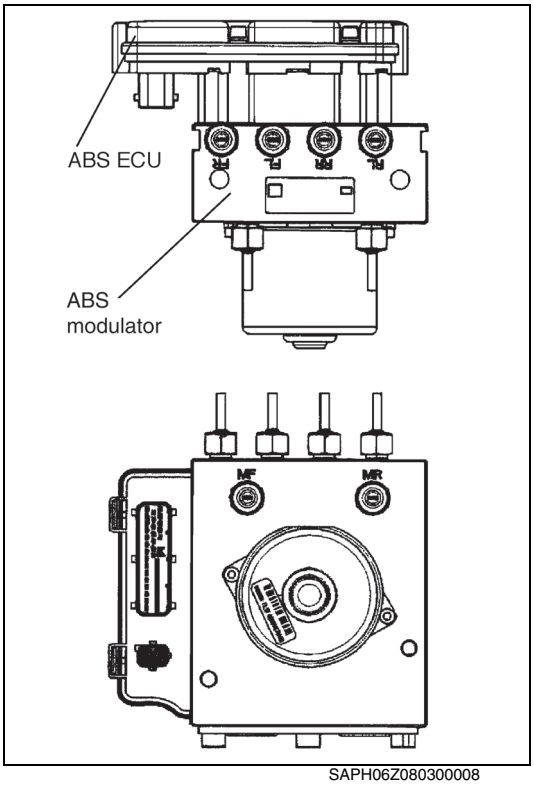


SAPH06Z080300008

## ABS MODULATOR ASSEMBLY

**1. Overview**

- The ABS modulator is mounted between the Hydro booster and disc brake caliper. It controls the fluid pressure to the disc brake caliper, regulating the pressure according to signals from the ABS ECU in three modes: pressure maintenance, pressure reduction, and pressure increase.

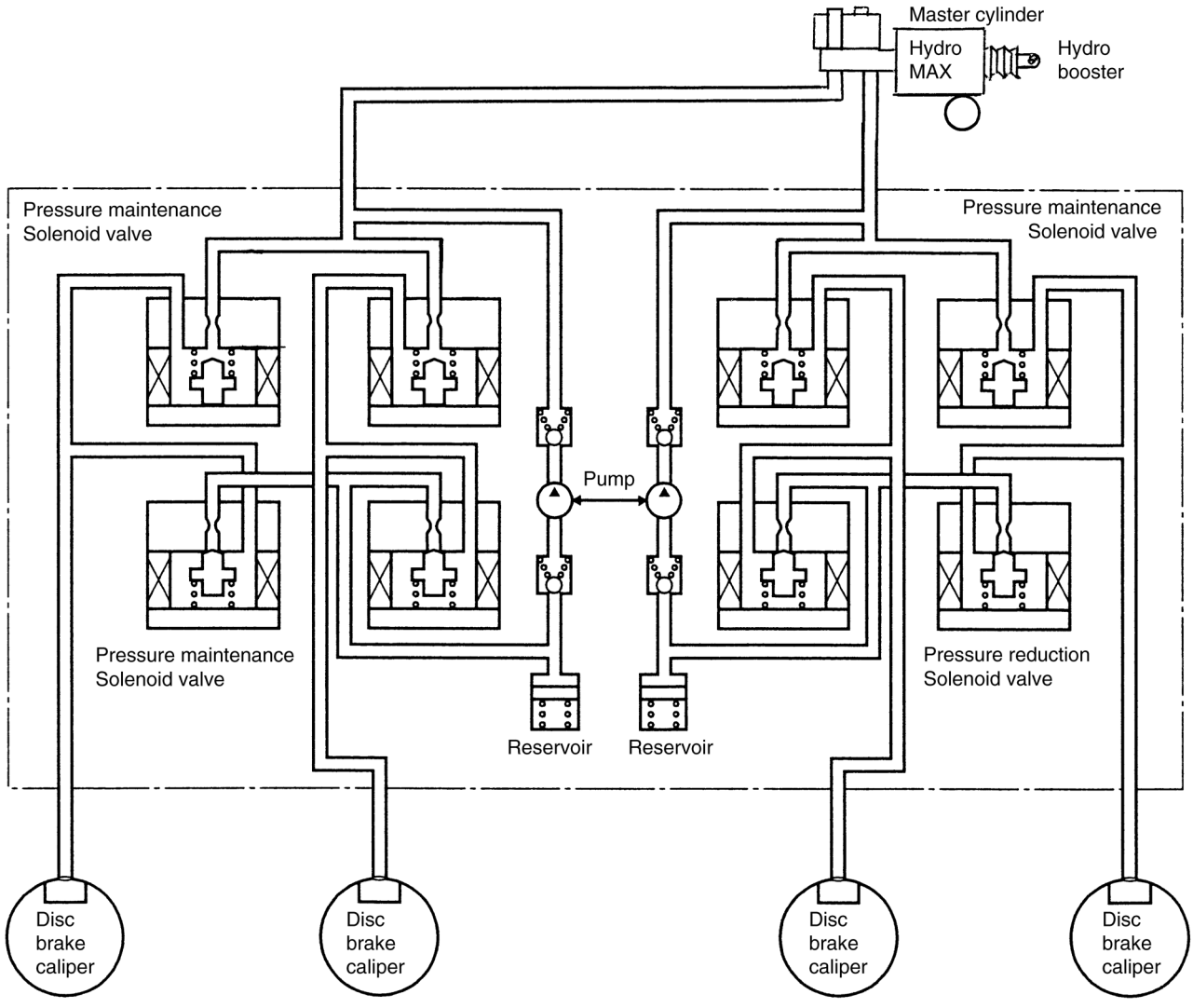


**ABS modulator**

SAPH06Z080300009

**2. Operation**

(1) During Normal Braking (ABS is not operating)

- Since there is no control signal input from the ABS ECU, the pressure maintenance solenoid valve port **A** is open, and the pressure reduction solenoid valve port **B** is closed. Accordingly, when the fluid pressure generated by the Hydro booster rises according to the fluid pressure from the master cylinder produced when the brake pedal is depressed, brake fluid is fed through port **A** to the wheel cylinder. Brake fluid is not sent to the pump side at this time because of the check valve **1** installed on that side. Then, when the brake pedal is released, the wheel cylinder brake fluid is returned to the master cylinder through the pressure maintenance solenoid valve port **A** to the Hydro booster.

**Each Port Status**

| | ABS ECU signal | Port status |
|---|---|---|
| Pressure maintenance solenoid valve | OFF | Port **A**: Open |
| Pressure reduction solenoid valve | OFF | Port **B**: Closed |

**ABS modulator**

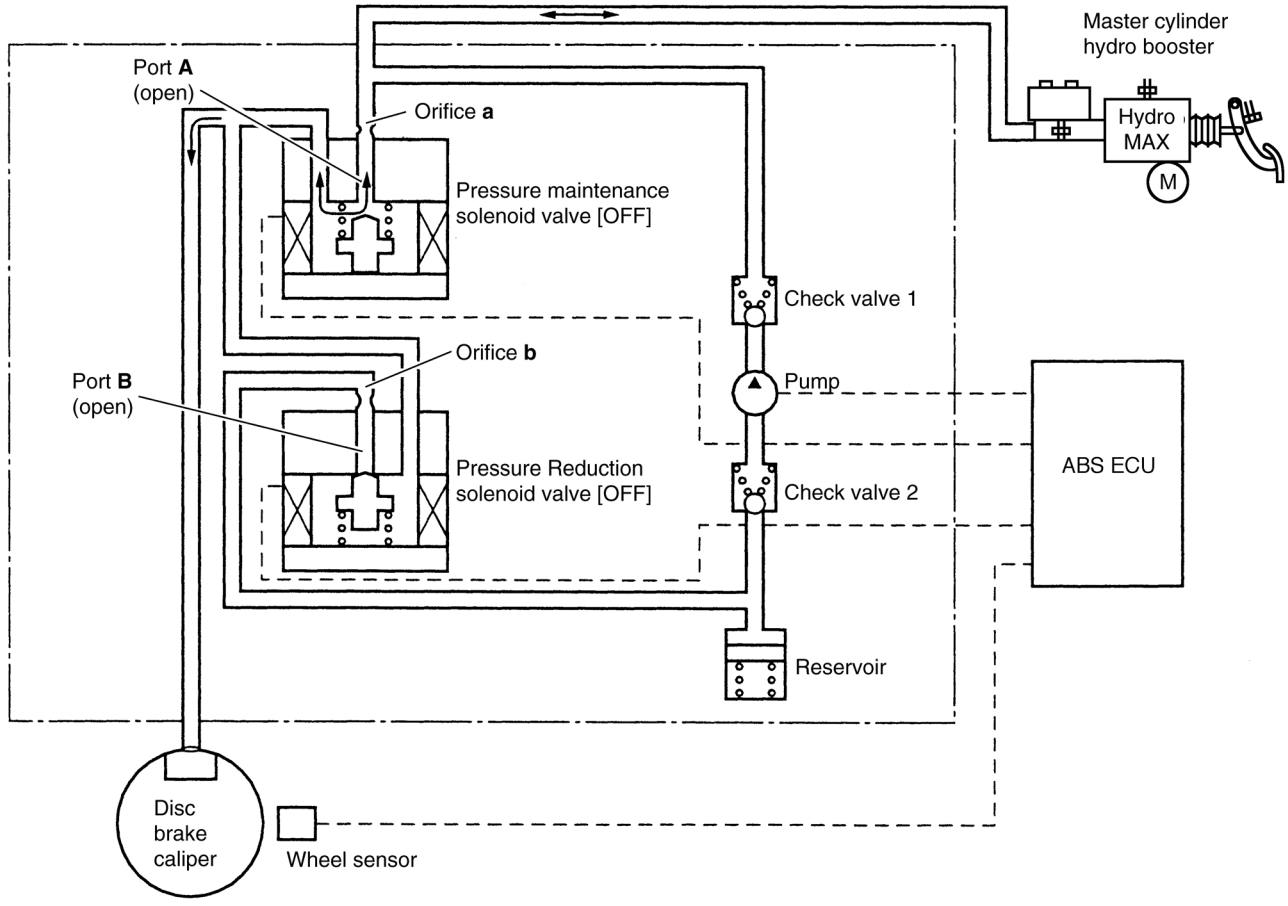


**Brake fluif flow (during normal braking)**

SAPH06Z080300010

(2) During ABS Braking
a. Pressure Reduction Mode

- When the wheels are about to lock, the pressure maintenance solenoid valve port **A** closes and the pressure reduction solenoid valve port **B** opens according to control signals from the ABS ECU. Accordingly, the wheel cylinder brake fluid is fed through the pressure reduction solenoid valve port **B** to the reservoir, reducing the wheel cylinder fluid pressure. While the ABS is in operation, the ABS ECU outputs a normal operating signal to the pump, which pumps out the brake fluid that accumulates in the reservoir and returns it to the Hydro booster.

**Each Port Status**

| | ABS ECU signal | Port status |
|---|---|---|
| Pressure maintenance solenoid valve | ON | Port **A**: Closed |
| Pressure reduction solenoid valve | ON | Port **B**: Open |

**ABS modulator**

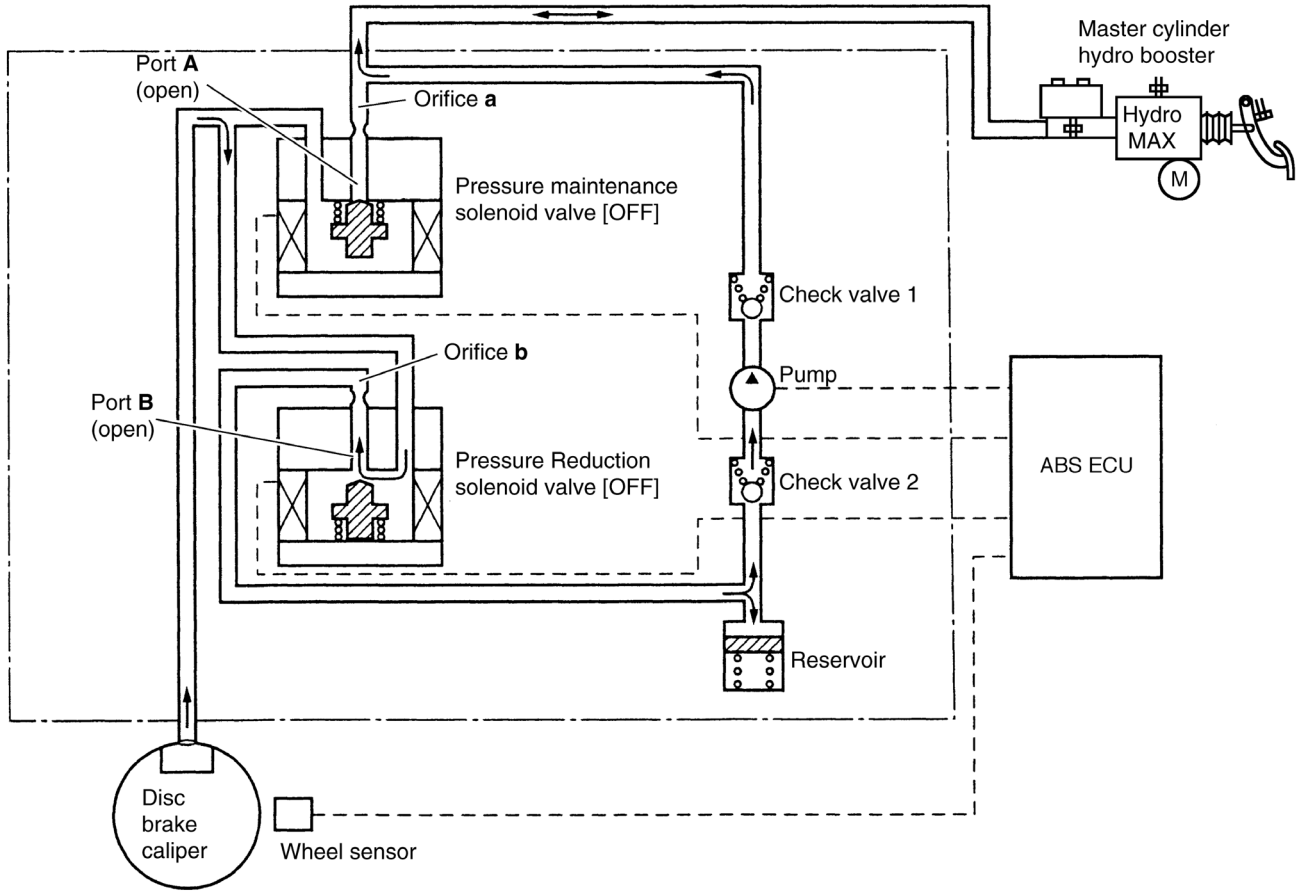


**Brake fluif flow (during normal braking)**

SAPH06Z080300011

b. During Pressure Maintenance

- When the wheel cylinder fluid pressure is reduced or increased to the required fluid pressure, the pressure maintenance solenoid valve port **A** and the pressure reduction solenoid valve port **B** simultaneously close according to control signals from the ABS ECU. This closes both the Hydro booster side and reservoir side oil routes, maintaining the wheel cylinder fluid pressure.

**Each Port Status**

| | ABS ECU signal | Port status |
|---|---|---|
| Pressure maintenance solenoid valve | ON | Port **A**: Closed |
| Pressure reduction solenoid valve | OFF | Port **B**: Closed |

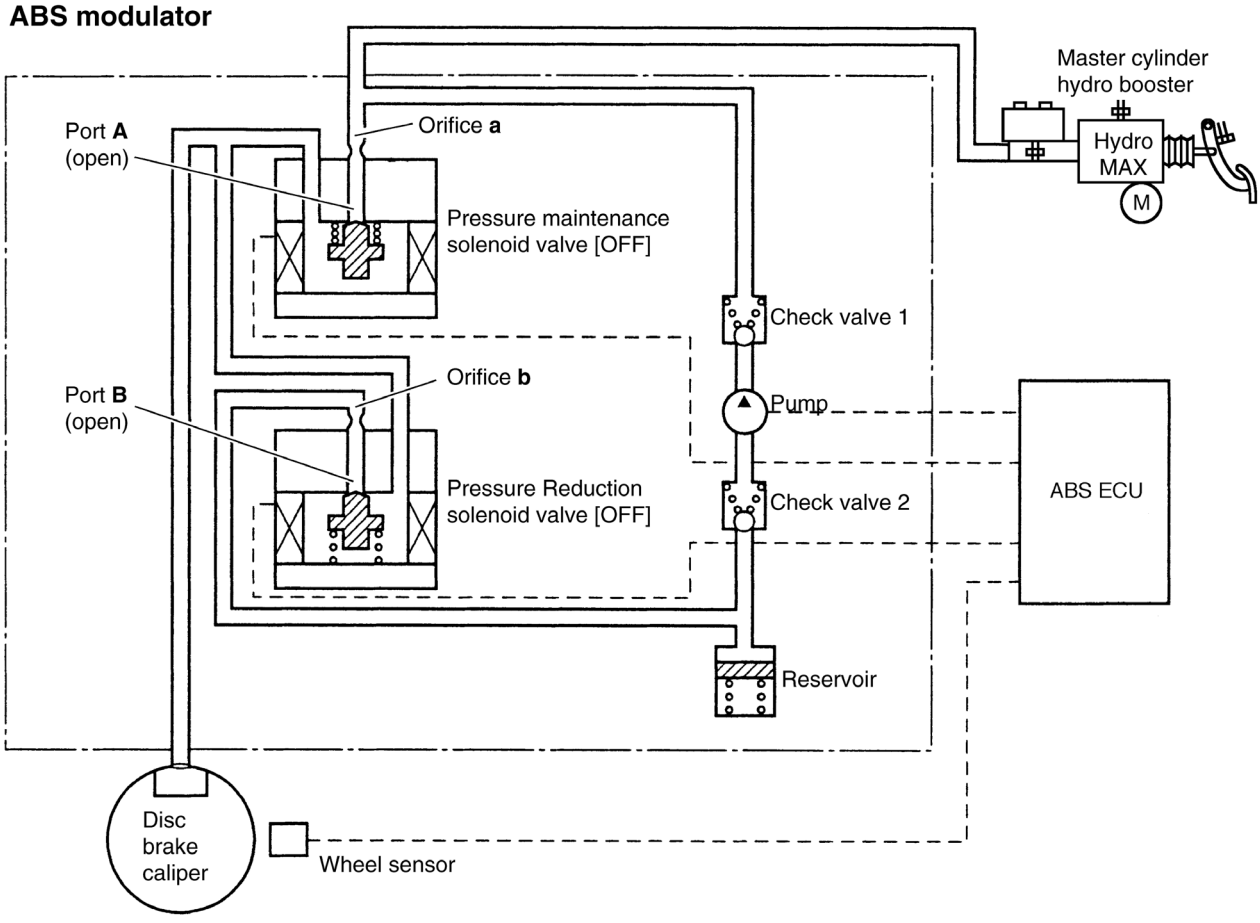


**Brake fluif flow (during normal braking)**

SAPH06Z080300012

c. During Pressure Increase

- When the wheel cylinder fluid pressure needs to increase rapidly, the pressure maintenance solenoid valve port **A** opens and the pressure reduction solenoid valve port **B** closes according to control signals from the ABS ECU. This condition is the same as the normal condition, and Hydro booster brake fluid is fed to the wheel cylinder, causing the wheel cylinder fluid pressure to rise. If there is any brake fluid remaining in the reservoir at this time, it is pumped out by the pump and sent to the wheel cylinder. The speed of the pressure increase is controlled by combination of the pressure increase and the pressure maintenance.

**Each Port Status**

| | ABS ECU signal | Port status |
|---|---|---|
| Pressure maintenance solenoid valve | OFF | Port **A**: Open |
| Pressure reduction solenoid valve | OFF | Port **B**: Closed |

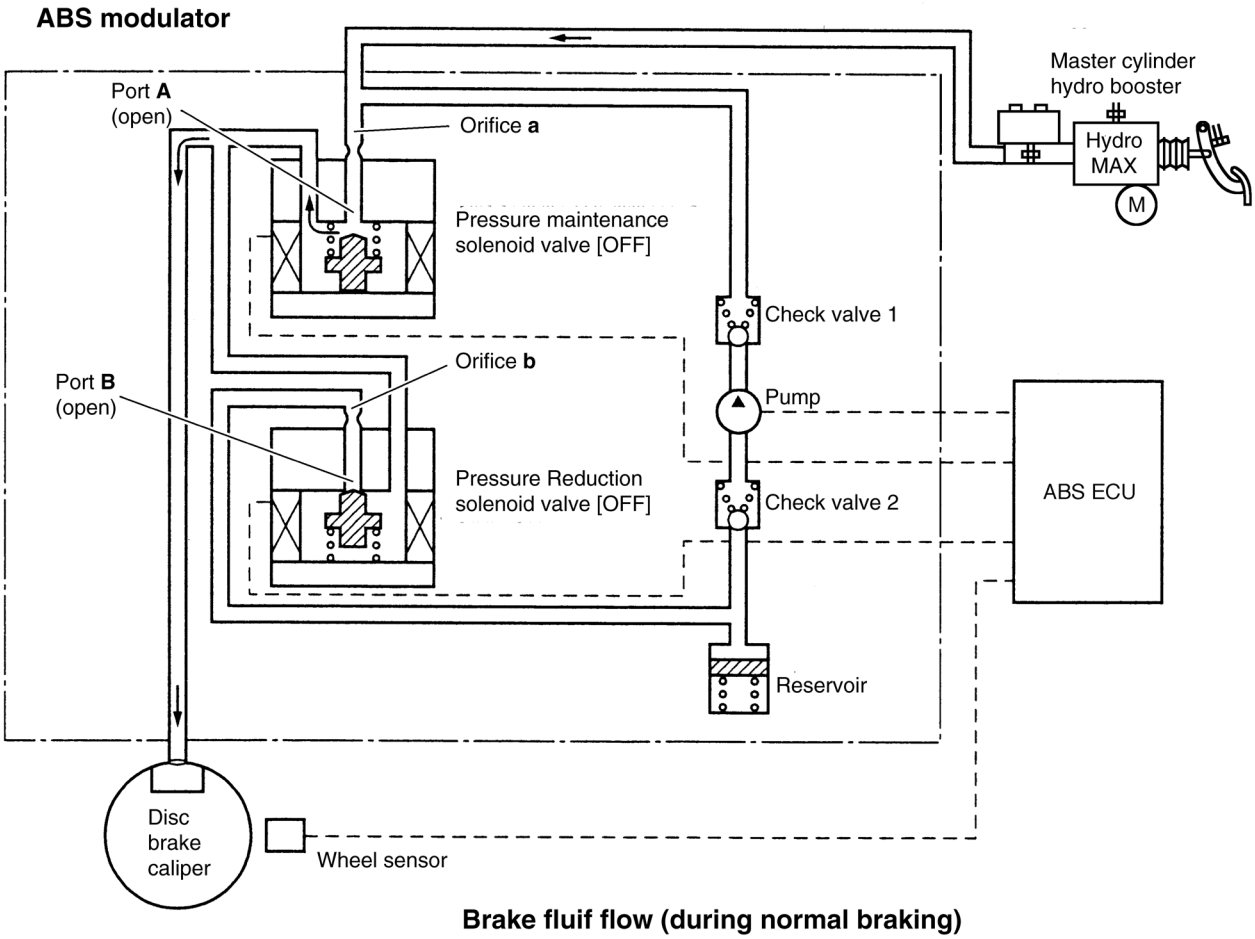


SAPH06Z080300013

## WHEEL SENSOR

These sensors are mounted facing the sensor rings on each wheel on the front and rear axles.

The wheel sensors are electromagnetic sensors consisting of a permanent magnet core with a coil of wire wrapped around it. The frequency of the pulse signals generated by magnetic inductance between the sensors and the sensor rings they face is proportional to the rotational speed of the wheels. These pulse signals are sent to the ABS ECU and are used to determine the wheels' rotational status.

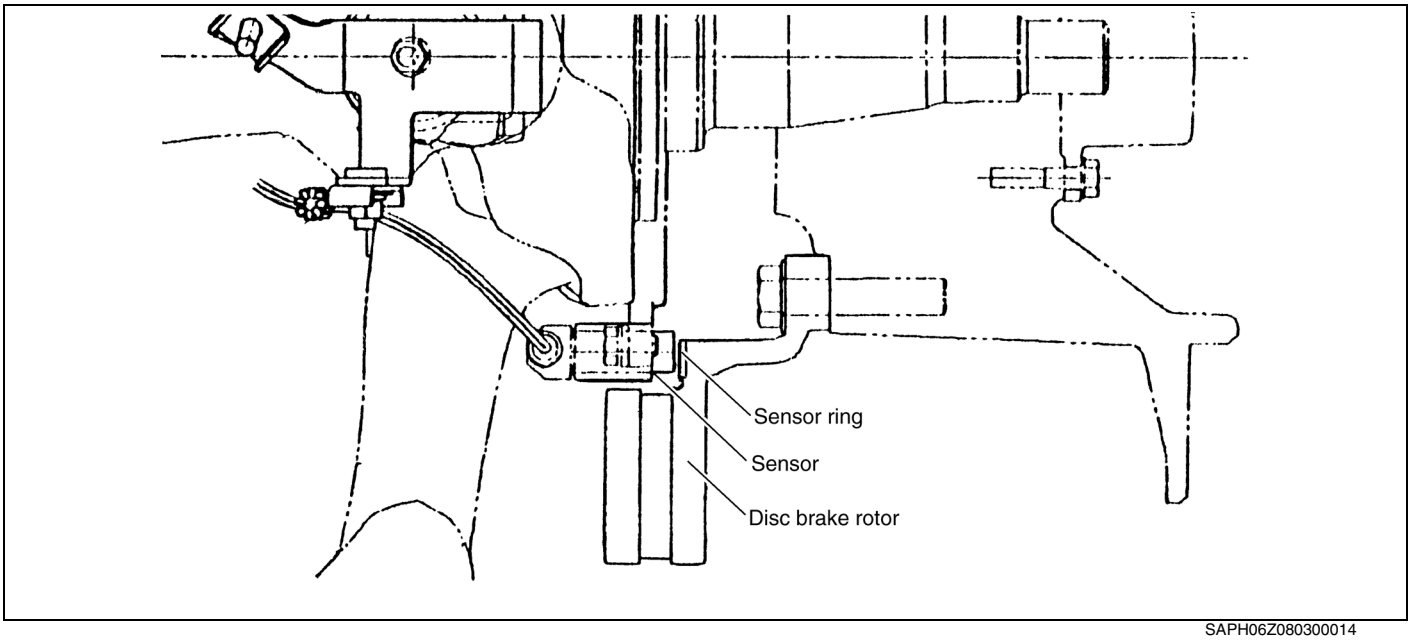


SAPH06Z080300014

Rotor integrated type

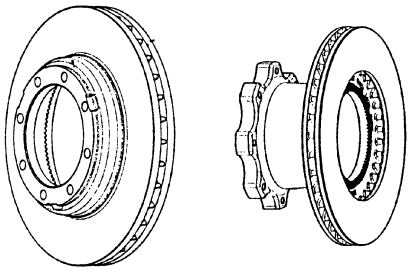

SAPH06Z080300015

## SENSOR RING

The sensor rings are press-fitted into the insides of the wheel hubs of each wheel or integrated in the brake rotor on the front and rear axles, and they face the wheel sensors described in the preceding section. The sensor rings are made of a magnetic material, and teeth are cut into the surface which faces the wheel sensor at regular intervals. Also, when the sensor ring performs one complete rotation, the sensor generates pulse signals corresponding to the number of teeth.

**Sensor ring position and number of teeth**

| Model | | 238 NE | 258 NE | 268 NE | 338 NF |
|---|---|---|---|---|---|
| Front | Position | Rotor integrated | | | |
| | Teeth No. | 100 | | | |
| Rear | Position | Rotor integrated | | | |
| | Teeth No. | 100 | | | |

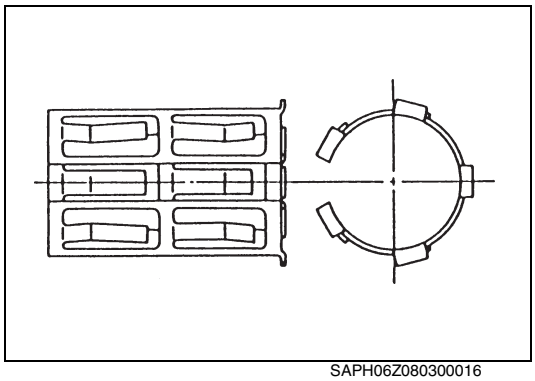

SAPH06Z080300016

## CLAMPING BUSHING

The wheel sensors are held in place through friction by clamping bushings that are inserted into the mounting brackets. If they are assembled properly (the clamping bushings should be pushed in to place so that the stoppers on the clamping bushings come in contact with the holder), the clamping bushings serve to eliminate the need to adjust the clearance between the wheel sensors and sensor rings.

## WARNING LIGHT

The ABS is equipped with the following warning light.

**ABS warning light**

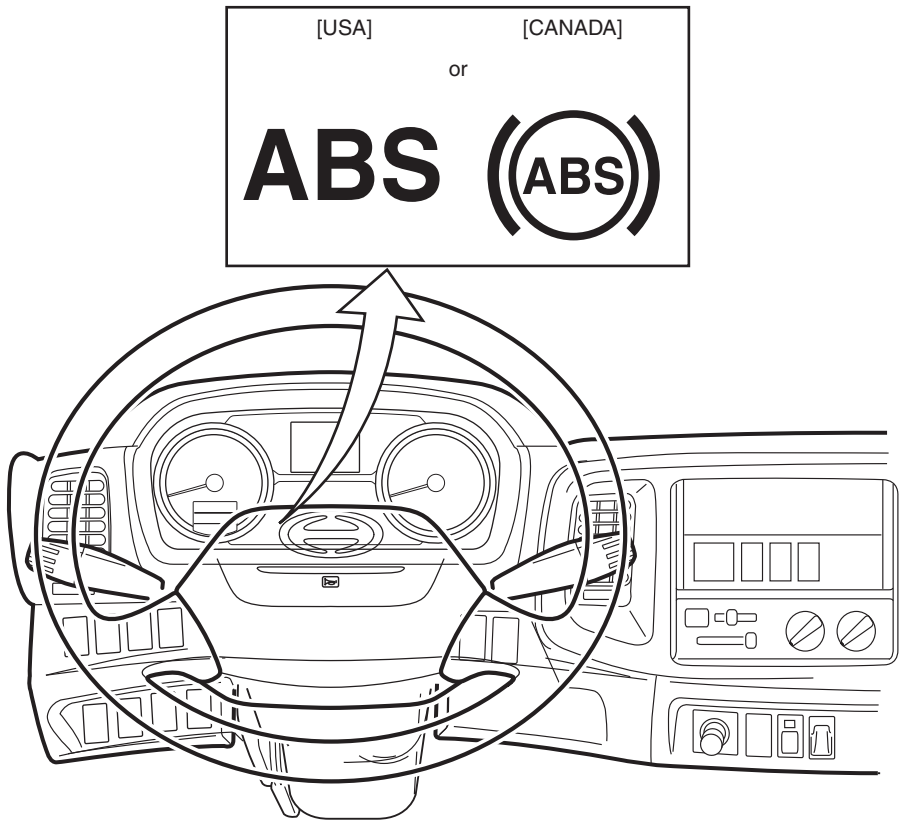


SAPH06Z080300017

**1. ABS WARNING LIGHT**

- This light indicates the status of the ABS. It lights once when the starter switch is turned on and automatically goes off if the ABS is functioning normally. If a malfunction occurs in the ABS while the vehicle is being driven, the light comes on to alert the driver.
  Also used as the diagnostic display light.

**NOTICE**

**Trouble shooting and Testing of the ABS refer to MERITOR WABCO Maintenance Manual. Cab-Mounted ECU and D Version Hydraulic ABS.**

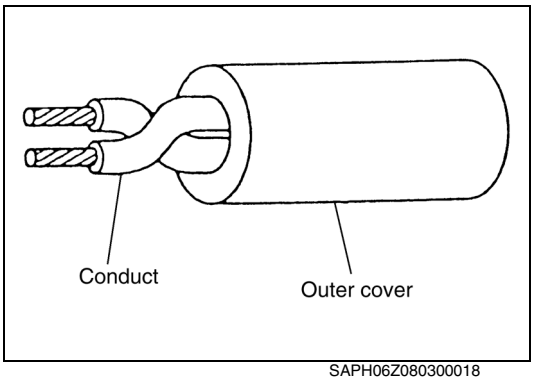


SAPH06Z080300018

## WHEEL SENSOR WIRE HARNESSES

Each wheel sensor wire harness employs a two-conductor twisted wire cable. Its function is to protect the wheel sensor signals, which are vital to the proper operation of the ABS, from electromagnetic interference. Under no circumstances should any part of the wheel sensor wire harness be cut or connected to any other wire. In the event that the wire harness should become cut, have it replaced by an authorized Hino dealer.

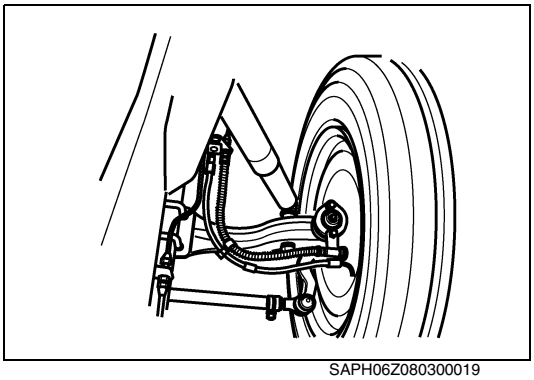

SAPH06Z080300019

## ABS WIRE HARNESSES

**1. Front axle ABS wire harness**

- The wire harness that runs from the side frame to the front axle wheel sensor must absorb the steering angle of the front wheel and the movement of the chassis springs. It is therefore necessary to always maintain an optimal spacing between the clips.

- The optimal spacing between the clips is achieved when the wheel sensor connectors are attached in the regular locations shown in the diagram such that the sensor cabling within the frame is not loose. When disassembling and reassembling, confirm that the connector and sensor cable layout is appropriate.

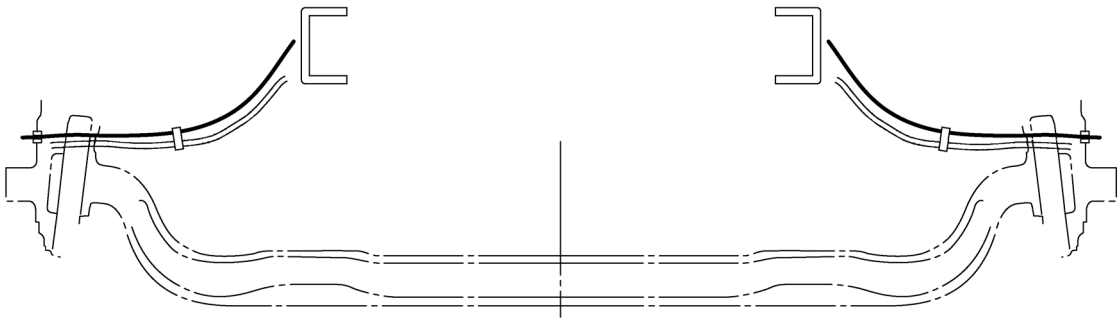

**Front axle wheel sensor wire harness arrangement**

SAPH06Z080300020

**2. Rear axle ABS wire harness**

- The wheel sensor wire harness is arranged so that the left and right wheel sensor wire harnesses are near each other. Therefore, special care should be taken not to make incorrect connections if the harnesses have been removed for inspection or repairs. If incorrect connections are made, it will interfere with the functioning of the ABS. For this reason, caution plates indicating "LEFT" and "RIGHT" are affixed to the wire harnesses. Be sure to check when connecting the harnesses. The wheel sensor wire harnesses, just like the front axle harnesses, must absorb the movement of the chassis springs. It is therefore necessary to always maintain an optimal spacing between the clips.
  When disassembling and re-assembling, confirm that the connector is secured in its proper place as shown in the diagram and that the sensor cables in the frame and over the axle are not hanging loosely.

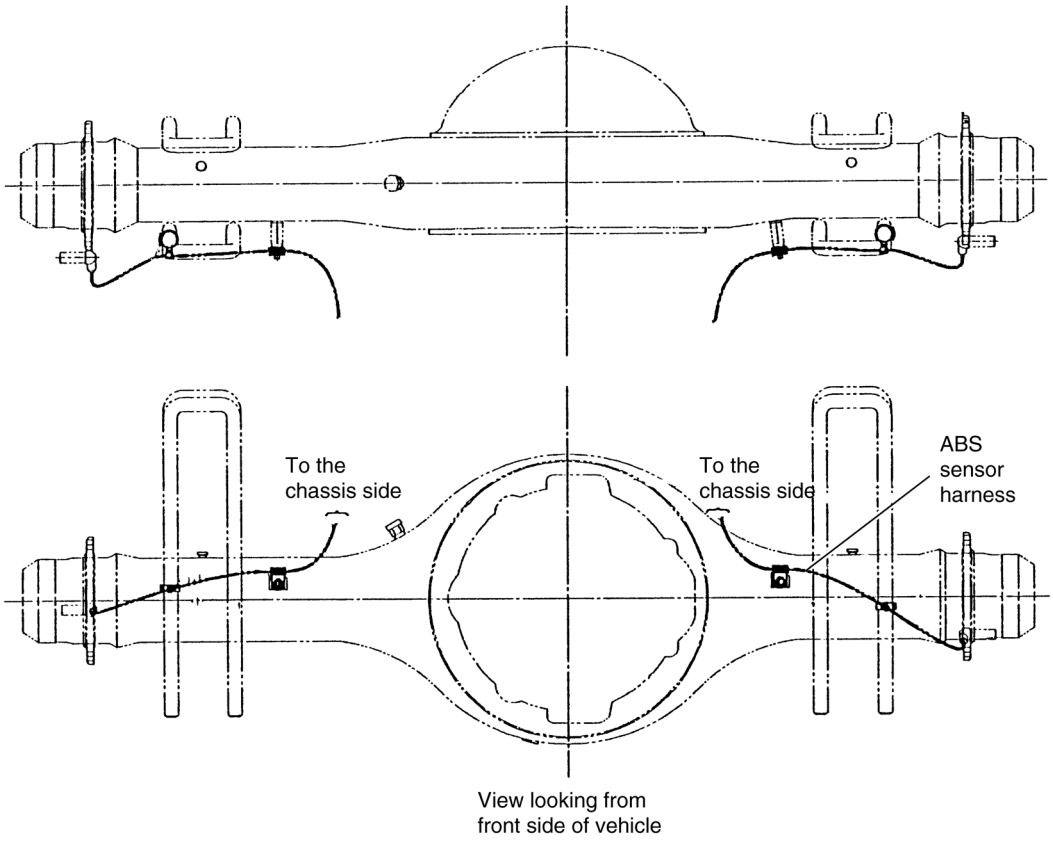


SAPH06Z080300021

## HANDLING WIRE HARNESSES

- The various sensors, valves, relays and wire harness connections to the ABS ECU employ multipolar harness connectors suitable for use with the weak currents used by electronic circuitry. Be very careful when handling them.

1. **Place the starter switch on "LOCK" before unplugging the harness connectors.**

2. **When unplugging the harness connectors, release the lock, hold the housing and unplug it straight as much as possible.**

3. **Do not pull holding the wire harness or pull with excessive force. Doing so can cause the pins of the harness connectors to be deformed.**

4. **Remove unnecessary connectors and do not plug them.**

5. **When inspecting using a circuit tester, insert the test probe from the wire harness side.**
   **Never insert the test probe from the pins of harness connectors as this can cause bad contacts.**

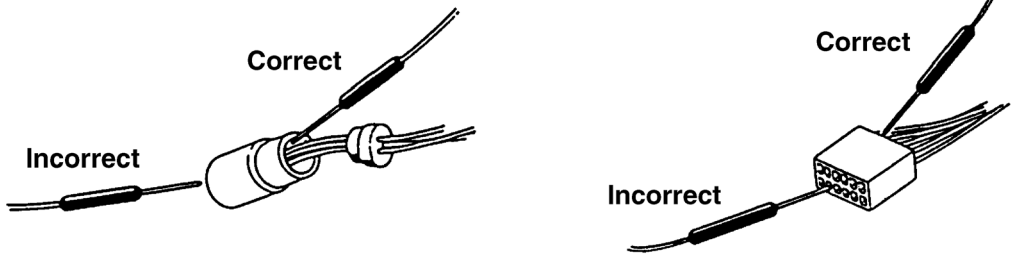


**How to insert test probe**

SAPH06Z080300022

6. **When unplugging the harness connectors, do not allow water, oil, dust, or any other liquid or substance to get on the terminals as they can cause bad contacts.**

7. **Be careful not to allow water, oil, dust, or any other liquid or substance to get on any component.**

8. **When plugging the harness connector, insert it completely and confirm that the harness connector lock is engaged.**

## ADDITIONAL PRECAUTIONS

**1. Make sure the model's starter switch is in the OFF position before unplugging the harness connector from the ABS ECU.**

**2. Make sure to unplug all the harness connectors from the ABS ECU before performing welding on the chassis or body of the vehicle. Also be careful that welding sputter does not get onto the harnesses.**

**3. When cleaning the interior of the model, make sure water does not get onto the ABS ECU, various relays, connectors, or any other component.**

**4. Use of a circuit tester**

- If a circuit tester is being used, always use one with an internal resistance greater than 100 kΩ inside the voltage measurement range.

**5. Installation of a radio or other electronic equipment**

- All electronic and radio equipment installed on the vehicle must be mounted as far away from the ABS ECU and wire harness as possible. Installation of certain electronic and radio equipment can also cause the ABS ECU to malfunction. All such equipment must also conform to all applicable laws. If you wish to install a radio or other electronic equipment, please contact your Hino service representative.

**6. Quick battery charge**

- When charging batteries using a quick charger, do it with both battery terminals removed.

**7. Installation of electrical equipment inside of the cab**

- When installing an air conditioner or other electrical equipment inside of the cab, be careful not to damage the engine, chassis, and wire harnesses inside the cab. Moreover, do not forget to plug the harness connectors unplugged during the installation.

# ABS (ABS : FULL AIR)

BR03-002

**ABS ..... BR03-2**
OVERVIEW ..... BR03-2
COMPOSITION AND OPERATION ..... BR03-3
FUNCTION ..... BR03-6
PRECAUTIONS WHEN DRIVING VEHICLES EQUIPPED WITH ABS ..... BR03-7
OVERVIEW AND FUNCTION ..... BR03-8
INSPECTION (FRONT WHEEL BRAKE) ..... BR03-13
INSPECTION (REAR WHEEL BRAKE) ..... BR03-15

# ABS

## OVERVIEW

EN0680203C100001

ABS is a system that makes effective use of the friction between the tires and the road surface to maintain vehicle stability while the brakes are being applied and for stopping the vehicle.
Applying the brakes forcefully on a slippery road surface can cause the wheels to be locked, due to excessive braking force. This causes the vehicle to lose stability because the locked wheels lose resistance in the lateral direction. More specifically, if the front wheels are locked, it becomes impossible to steer the vehicle, and if the rear wheels are locked, the rear of the vehicle may fishtail from side to side.
Also, when wheel-locking occurs, it is not possible to make effective use of friction between the tires and the road surface. This may cause the braking distance to be increased.
ABS uses wheel sensors mounted on the axles to constantly monitor the rotation of the wheels. If any of the wheels is starting to lock up, the ABS ECU sends signals to the ABS control valve and immediately adjusts the brake pressure to prevent wheel-locking.
In this way, ABS maintains the stability of the vehicle while stopping by making effective use of the friction between the tires and the road surface.

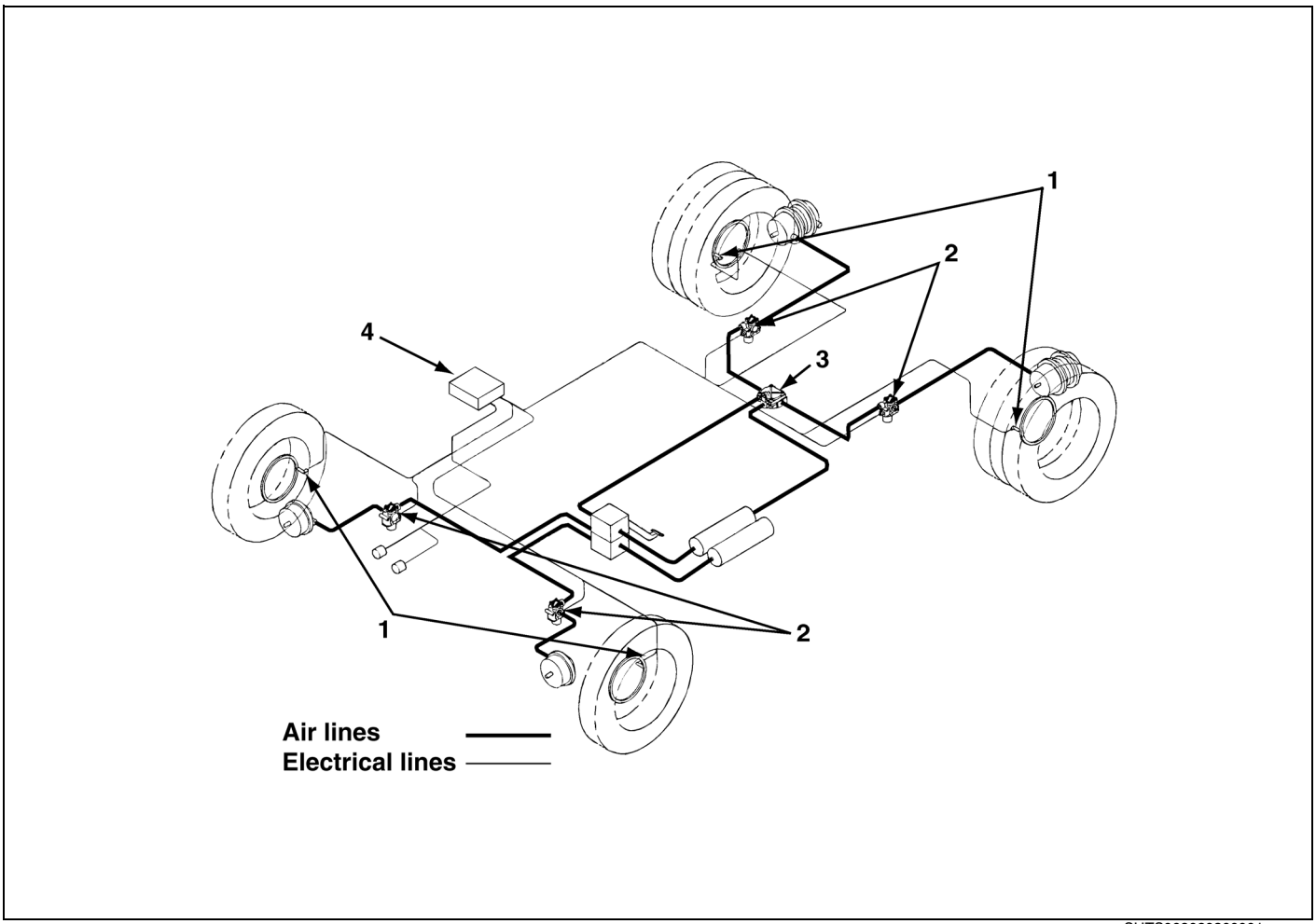


SHTS068020300001

| | | | |
|---|---|---|---|
| 1 | Wheel sensors | 3 | Relay valve |
| 2 | ABS control valves | 4 | ABS ECU |

# COMPOSITION AND OPERATION

EN0680203C100002

The ABS system is comprised of sensor rings mounted on the wheels. The ABS ECU, which receives signals from the wheel sensors that monitor the rotational speed of the wheels and outputs control signals to maintain the appropriate braking force; ABS control valves, which increase or decrease the braking force, based on the control signals; the warning light, which gives an alarm if the system malfunctions; the piping, wire harnesses, etc., that link together the various units that compose the system.
Pulse signals transmitted by the sensor rings mounted on the wheel hubs, rotated together with the wheels, and the wheel sensors mounted near sensor ring on the axles are sent to the ABS ECU. The ABS ECU then calculates the wheels' rotational speed, acceleration, deceleration, and amount of slippage, based on these signals.
If the limit values for the wheel's deceleration, or slippage ratio are exceeded, the ABS ECU immediately transmits signals to the ABS control valves to adjust any excess braking force.
This ABS system controls the four wheels, front, rear, right, and left, independently.

## 1. SYSTEM COMPOSITION DIAGRAM

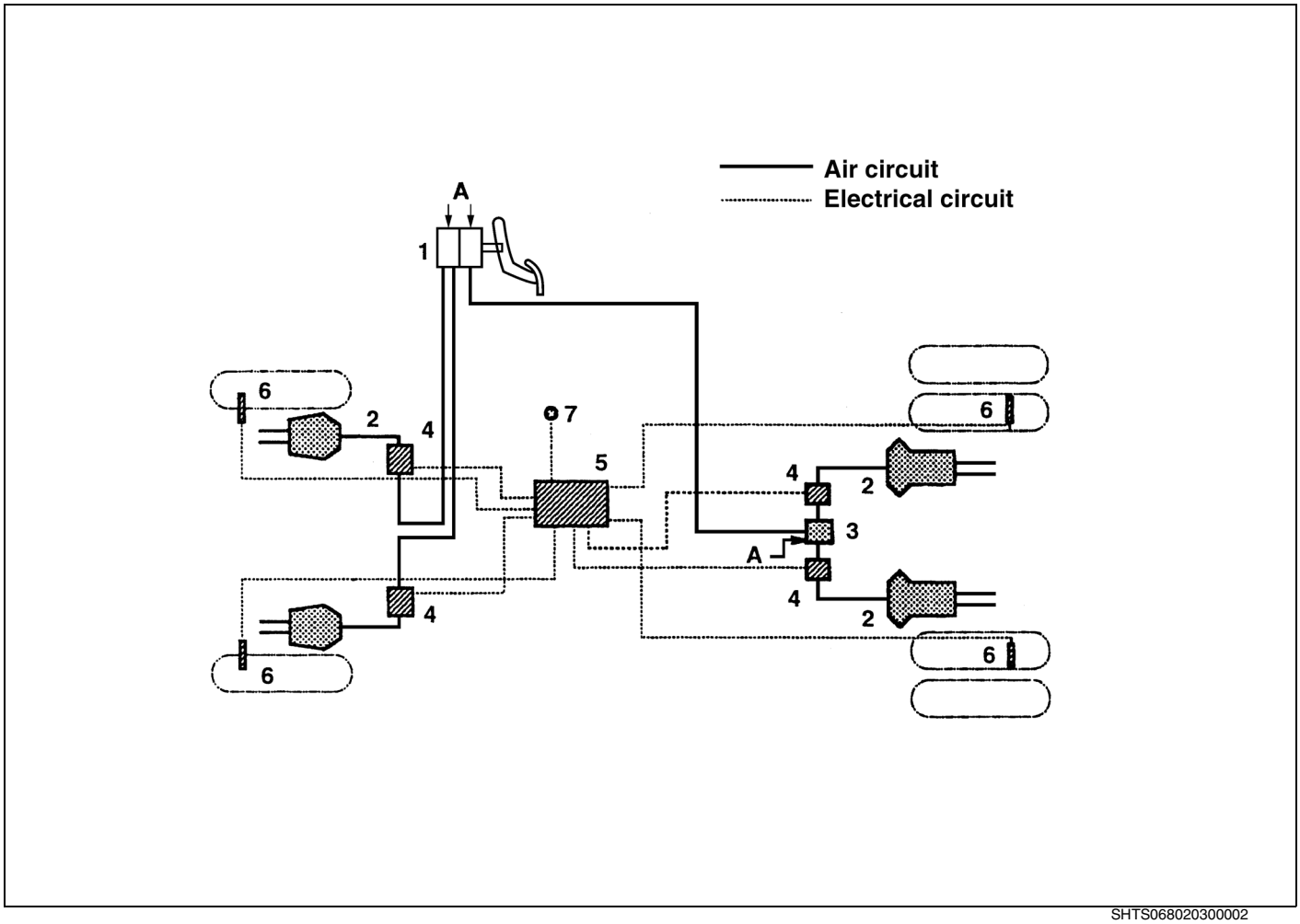


SHTS068020300002

| | | | |
|---|---|---|---|
| 1 | Brake valve | 5 | ABS ECU |
| 2 | Brake chamber | 6 | Wheel sensor |
| 3 | Relay valve | 7 | ABS warning light |
| 4 | ABS control valve | A | From air tank |

## 2. ABS CONTROL FLOWCHART

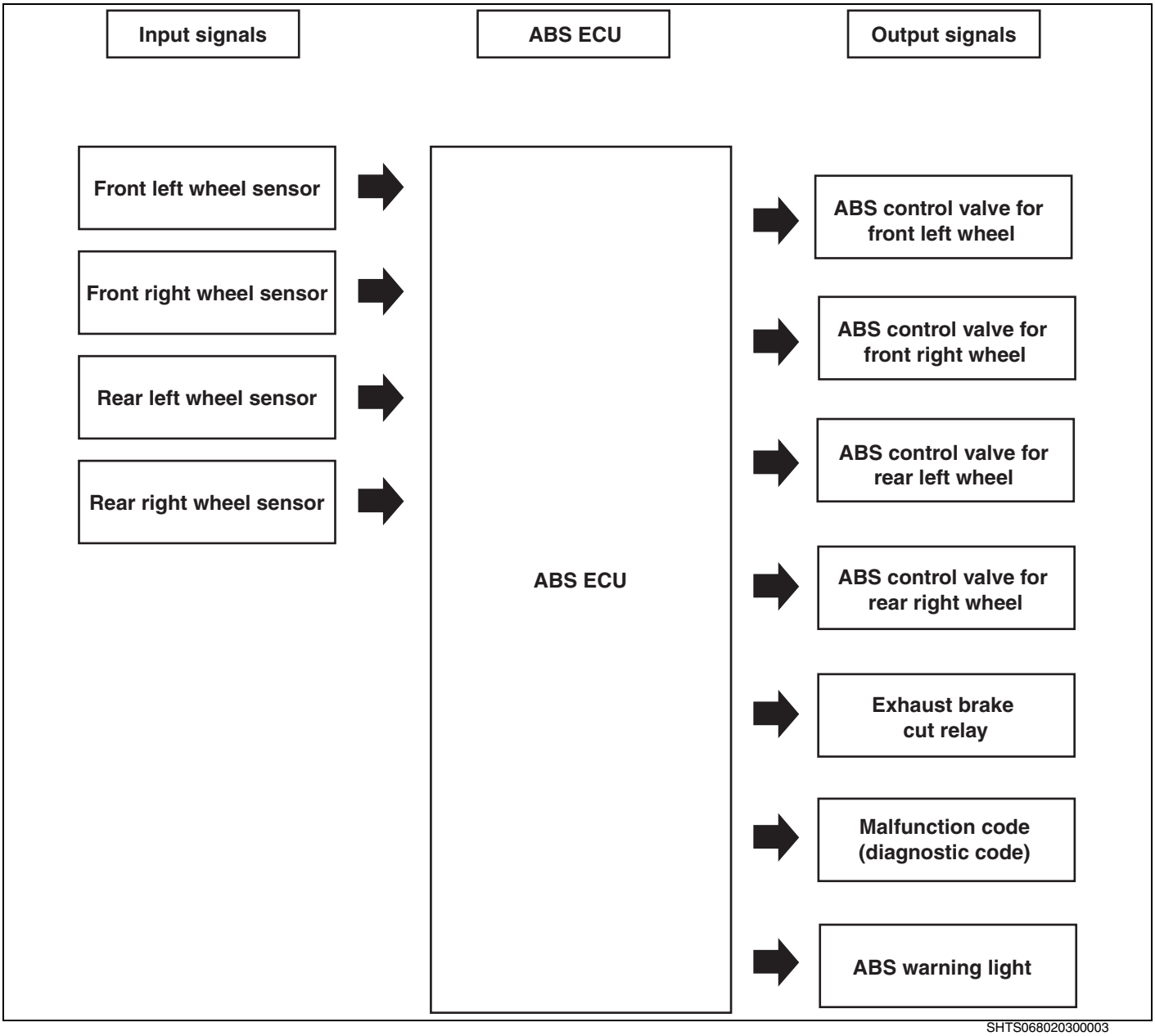


SHTS068020300003

## BASIC PRINCIPLE

Based on its relationship with the slip ratio, which is determined from the wheels' rotational speed and the vehicle's speed, ABS controls the brake force so that it will be most effective.

When the driver applies the brakes, the rotation of the wheels is controlled and the vehicle speed drops. However, the momentum of the vehicle attempts to push it forward further even though the rotation of the wheels is being halted. At this point, slipping will occur if there is a gap between the wheels' rotational speed and the vehicle's speed. The slip ratio is a value that indicates the rate of slippage.

$$\text{Slip ratio} = \frac{\text{Vehicle's speed} - \text{Wheel's rotational speed}}{\text{Vehicle's speed}} \times 100\ \%$$

**Slip ratio 0 % : No slipping between the wheels and the road surface**

**100 % : Wheels locked**

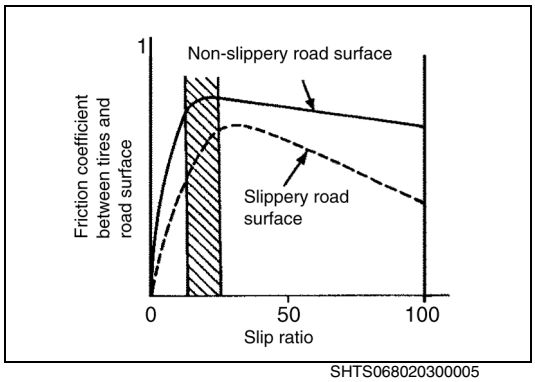


SHTS068020300005

The graph shown at left shows the relationship between the friction coefficient of the tires and of the road surface and the slip ratio.

In an ABS-equipped vehicle, the brake force is controlled to ensure that it is within the range where the friction coefficient is high (shaded portion of the graph) without locking the wheels. This ensures efficient braking performance.

## OPERATION

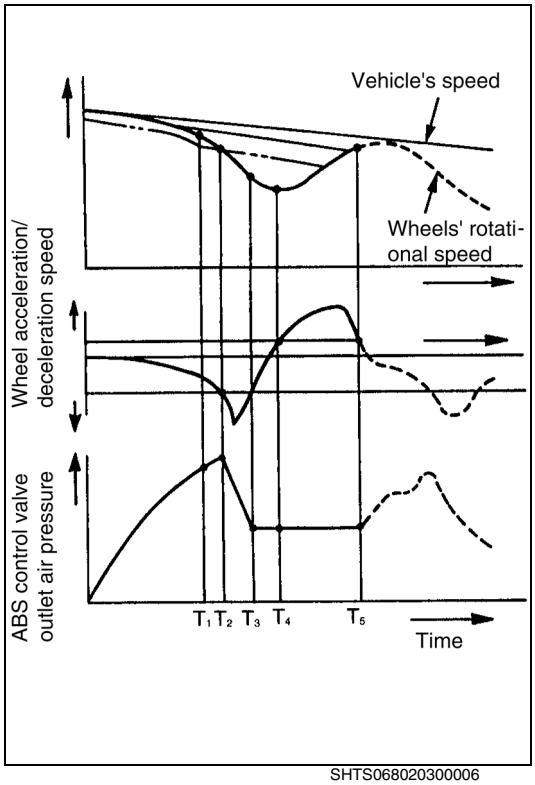


SHTS068020300006

The ABS control characteristics line graph at left illustrates how the vehicle's speed, the wheels' rotational speed, the wheel acceleration/deceleration, and the air pressure at the ABS control valve outlet change over time after the brakes are applied.

When the brakes are applied, the vehicle's speed and the wheels' rotational speed drop and at the same time, the wheel acceleration/deceleration speed also drops. At point T1, a gap begins to open between the wheels' rotational speed and the vehicle's speed. Passing on point T2, the ABS ECU detects that the wheels are beginning to lock and is lowering the outlet air pressure of the ABS control valve to prevent wheel locking from occurring.

At point T3, the wheel acceleration/deceleration speed is starting to return to normal one, and the ABS ECU stops lowering the air pressure at the ABS control valve outlet and maintains it at a constant level.

At point T5, the wheels' rotational speed and the vehicle's speed are about the same. The ABS ECU detects that the wheels are no longer likely to be locked and increases the air pressure at the ABS control valve outlet.

The above processes is repeated over and over until the vehicle comes to a complete stop.

# FUNCTION

EN0680203C100003

## FAIL-SAFE FUNCTION

This ABS system is equipped with a fail-safe function that causes the ABS warning light on the instrument panel to light and to restore the normal (non-ABS) brake system, should an ABS malfunction occur.
Note that the ABS system consists of two independent circuits. Should a malfunction occur for whatever reason in the electrical circuits, that system's ABS is switched off and the normal brake system is restored while ABS control continued for the other system. This configuration is designed to minimize the effects of any malfunction on ABS function.

## EXHAUST BRAKE CONTROL FUNCTION

The ABS of this vehicle is equipped with a function that controls the exhaust brake while ABS is operating. If the exhaust brake is applied independently or in conjunction with the service brake on a road surface with an abnormally low friction coefficient, the drive wheels may lock. This ABS prevents the drive wheels from locking in such situations by automatically releasing the exhaust brake, if necessary, during ABS operation.

# PRECAUTIONS WHEN DRIVING VEHICLES EQUIPPED WITH ABS

EN0680203F100001

Electronically, ABS uses the coefficient of friction (the amount of traction) between the tires and the road surface to monitor the speed of each wheel. If one or more wheels indicates the possibility of locking, resulting in fishtailing or other loss of stability, ABS enables the vehicle to be brought to a stop. Even with ABS, however, a driver must operate the vehicle in a safe manner and recognize the following points with respect to the operation of ABS.

| CHECK POINTS | REMEDIAL ACTIONS |
|---|---|
| • Even with ABS, the braking distance on a wet or slippery road will be longer than on a dry road, and if the road surface is covered with ice, snow or gravel, the braking distance will be even greater. | • Even with ABS, always drive safely, taking into consideration the road and traffic conditions and the condition of your tires, including tire type and tire wear. Always keep a safe distance from any vehicle being driven in front of you. |
| • ABS does not operate when the vehicle is starting, accelerating or turning, and will not assist in maintaining directional stability or steerability or in shortening the braking distance.<br>• Even if the ABS is operational, where the coefficient of friction is very low, such as on an icy roadway, skidding, inability to steer, and instability may occur because of insufficient traction by the tires. | • If engine braking causes instability or fishtailing, the clutch should be engaged or the transmission shifted to neutral, to prevent the application of the engine braking to the drive wheels. |
| • Where engine braking, as a result of downshifting, occurs on a surface with a low coefficient of friction, such as ice, the drive wheels may lock, causing fishtailing or vehicle instability. ABS does not operate unless the brake pedal is applied. | • If the air pressure becomes low and the air pressure warning light comes on and a buzzer sounds, immediately stop the vehicle in a safe place. Begin driving again only after the return to normal air pressure. |
| • If the ABS engages, the vehicle's air consumption rate will be higher than usual. | • Vibrations and noise during the operation of ABS are not malfunctions. Remain calm and continue to steer the vehicle in an appropriate manner. |
| • When ABS is activated, the driver may experience a small amount of vibration (especially if the road surface between the left and right tires is different) and difficulty in steering. Also, the operation of the ABS may generate some noise. | |
| • The ABS warning light will come on when you turn the starter switch to the "on" position. It stays on briefly and then turns off automatically. If the light does not come on, have your vehicle inspected and serviced immediately at your nearest HIno service dealer. | • If the warning llight lights up again when you reach a speed about 6 km/h (4 mph) the ABS system may not be functioning properly. Have it inspected and repaired if necessary *<br>The warning light can be reset by turning off the engine while the vehicle is at rest. If the warning light fails to go out after the engine is restarted and the speed indicated above is reached, or if it lights frequency while the vehicle is being driven, the ABS must be |

• <u>OTHER CHECKPOINTS REGARDING HANDLING</u>

1. When washing the vehicle, take care not to direct high-pressure streams of water at the ABS control valves, harnesses, or connectors. Also, under no circumstances should the ABS ECU or electrical relays be exposed to water.
2. Be very careful not to damage the ABS wire harness when removing snow, ice, mud or other material from the outside or underside of the vehicle.
3. All electronic and radio equipment installed on the vehicle must be mounted as far away from the ABS ECU and wire harness as possible. Installation of certain electronic and radio equipment can also cause the ABS ECU to malfunction. All such equipment must also conform to all applicable laws. If you wish to install a radio or other electronic equipment, please contact your Hino service representative.

SHTS068020300007

# OVERVIEW AND FUNCTION

EN0680203C100004

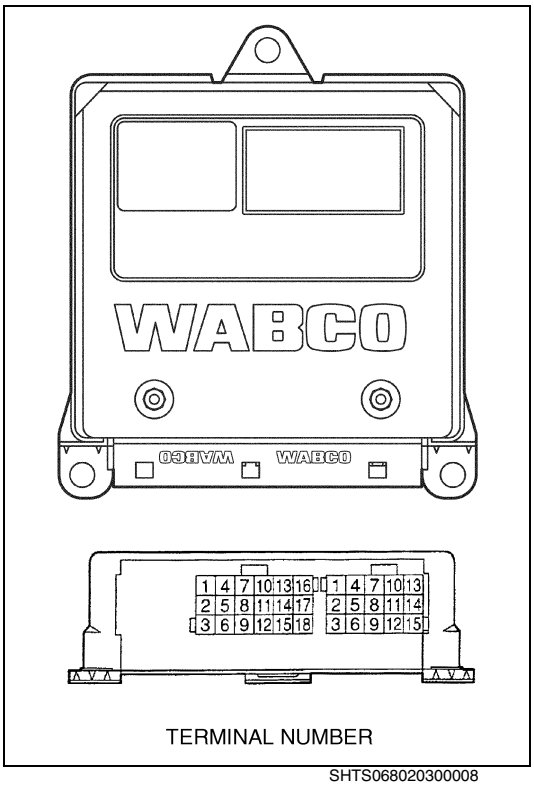


SHTS068020300008

## 1. ABS ECU

Based on pulse signals from the wheel sensors, the ABS ECU mounted in the vehicle calculates and evaluates the slip ratio and the acceleration/deceleration speed of the wheels. Based on the results, it sends signals to the ABS control valves as necessary, causing them to operate and apply the brakes to maintain the slippage of the wheels within the optimal range.
During braking, the air pressure applied to the brake chambers is regulated to prevent the wheels from locking. The brakes are applied so as to maintain the slippage of the wheels within the optimal range.
Regardless of whether the vehicle is stopped or being driven, and whether or not the brakes are being applied, the circuit consisting of the wheel sensors, control valves, ABS ECU, and wire harnesses are constantly being checked by the ABS ECU's fail-safe circuit. If some sort of malfunction occurs, the fail-safe circuit warns the driver by lighting the ABS warning light. At the same time, the ABS system that is experiencing the malfunction is shut off and braking is restored to normal (non-ABS) operation.

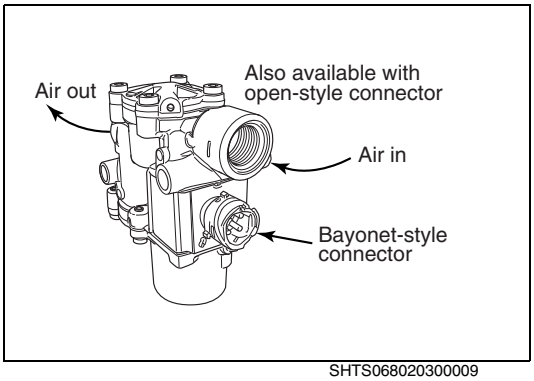


SHTS068020300009

## 2. ABS CONTROL VALVES

(1) Overview

- The ABS control valves are positioned in the brake air circuit on the way to brake chambers. Based on signals from the ABS ECU, they adjust the air pressure sent to the brake chambers in one of three modes: pressure increase, pressure reduction, or pressure maintenance.

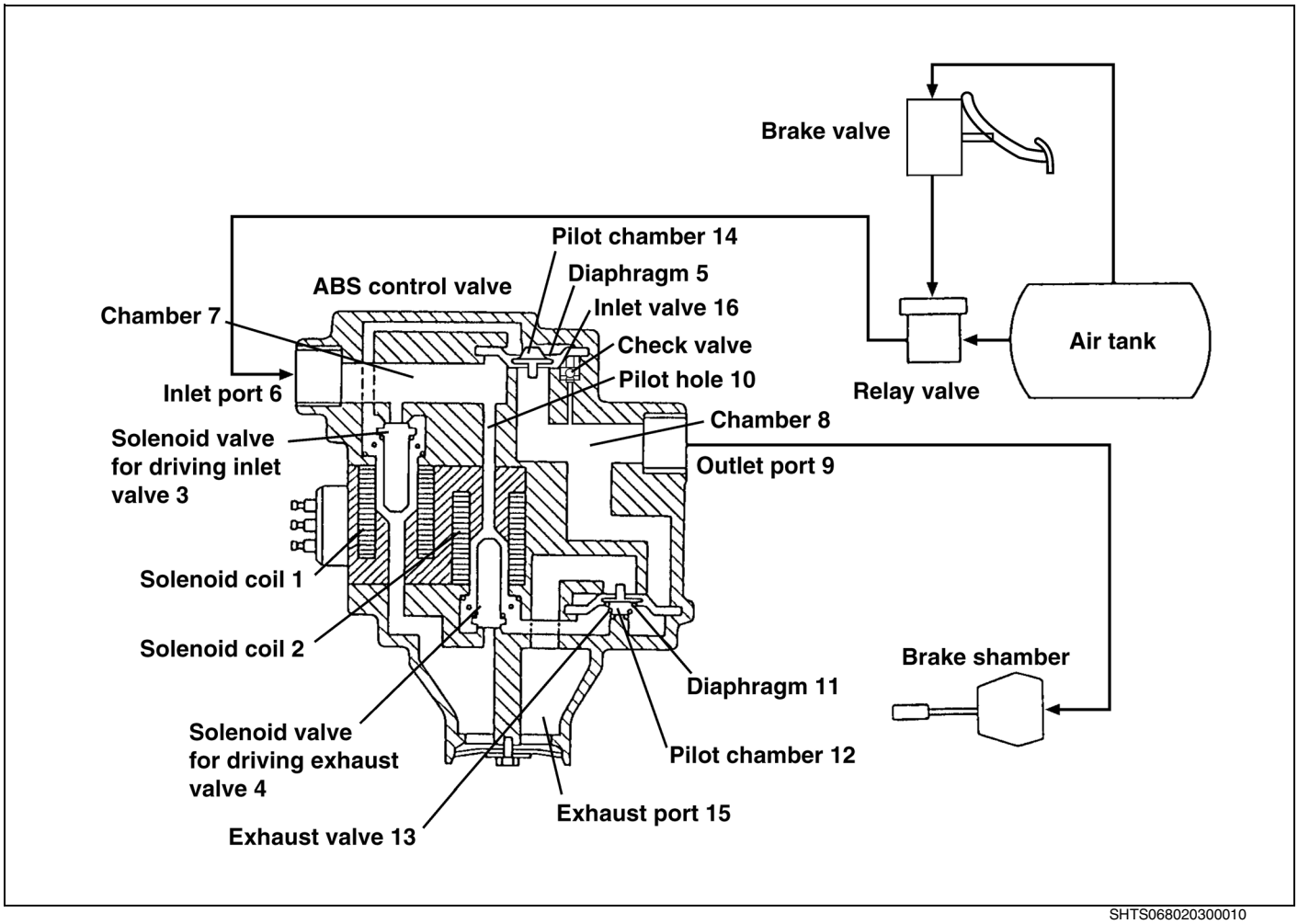


SHTS068020300010

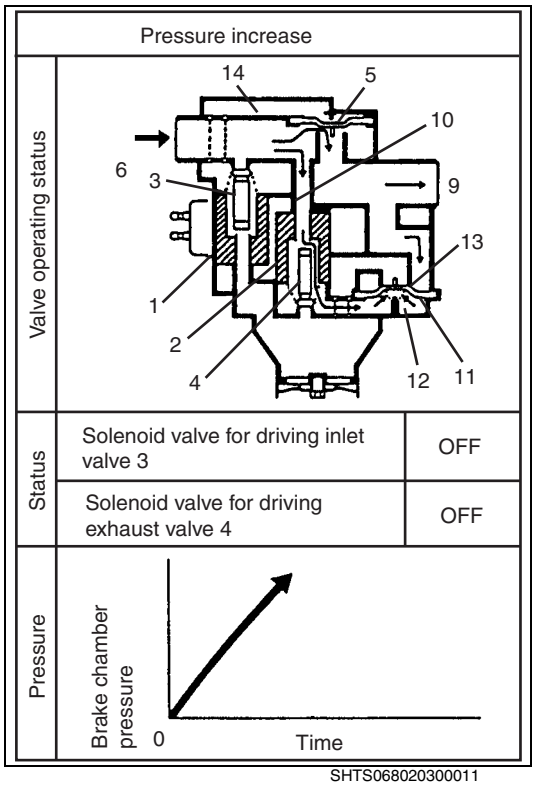


SHTS068020300011

(2) Operation

a. PRESSURE INCREASE MODE

- When the driver steps on the brake pedal, air from the relay valve enters through inlet port (6), pushes open diaphragm (5), passes through outlet port (9), and flows into the brake chamber. At this point, solenoid coil (1) is not energized, so solenoid valve (3) is closed and pilot chamber (14) is open to the atmosphere. Also, solenoid coil (2) is also not energized, so solenoid valve (4) is closed. As a result, air passes through pilot hole (10) and enters pilot chamber (12). It then pushes up diaphragm (11) and closes exhaust valve (13).

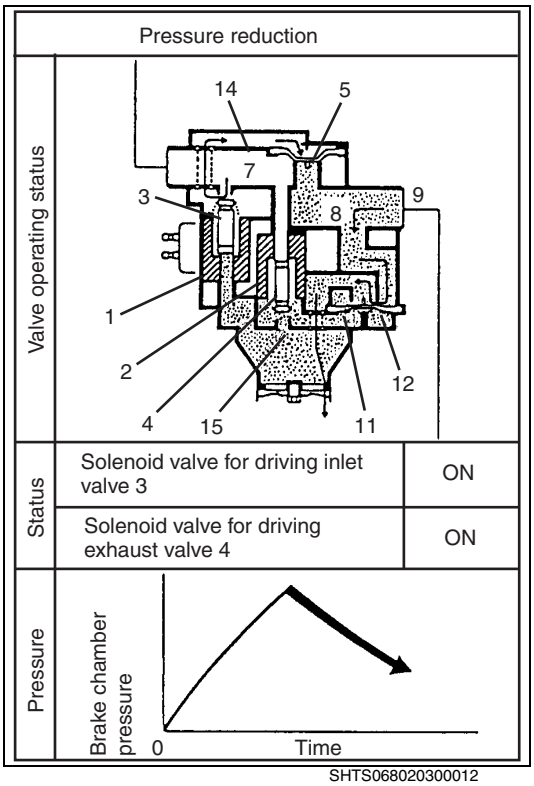


SHTS068020300012

b. PRESSURE REDUCTION MODE

- When solenoid coil (1) is energized, solenoid valve (3) opens and air also flows into pilot chamber (14). It pushes down on diaphragm (5), shutting off chambers (7) and (8). At the same time, solenoid coil (2) is also energized. This causes solenoid valve (4) to open and the operating air from pilot chamber (12) passes through exhaust port (15) and is released into the atmosphere. Consequently, the air from the outlet port (9) side (brake chamber) pushes down on diaphragm (11) and air is released into the atmosphere. This causes the air pressure of the brake chamber to decrease.

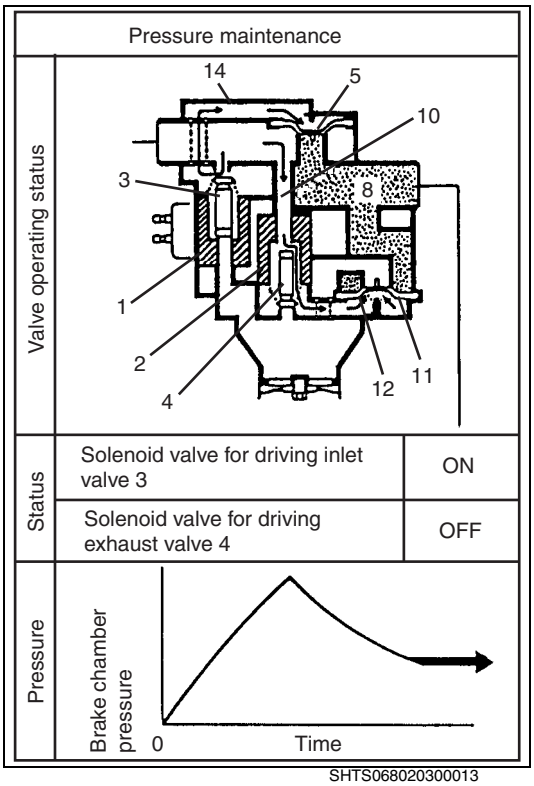


SHTS068020300013

c. PRESSURE MAINTENANCE MODE

- When solenoid coil (1) is energized, solenoid valve (3) opens and air flows through chamber (7) and acts on pilot chamber (14). On the other hand, since solenoid coil (2) is not energized, solenoid valve (4) is closed and air flows through pilot hole (10) and acts on pilot chamber (12). This causes diaphragms (5) and (11) to shut off their air passages, and the chamber (8) pressure, that is to say the air acting on the brake chamber, is maintained at the pressure that was current when the switch from the pressure reduction mode to the pressure maintenance mode took place.

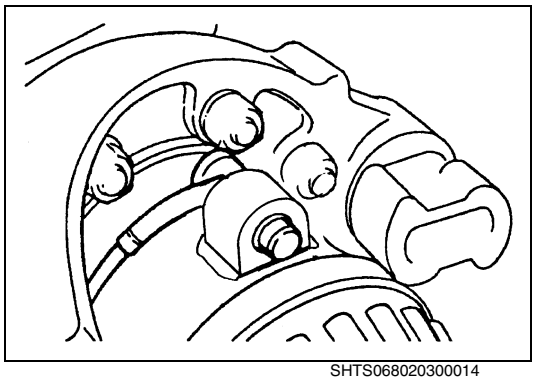

SHTS068020300014

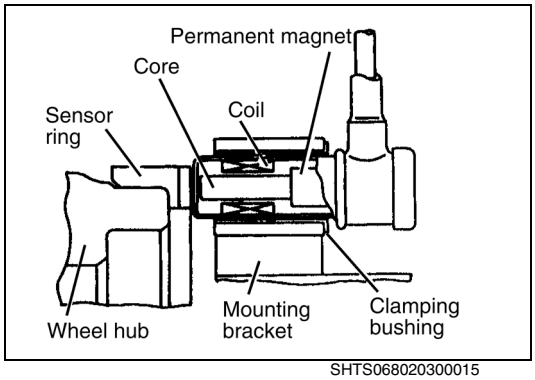


SHTS068020300015

### 3. WHEEL SENSORS

These sensors are mounted, facing the sensor rings on each wheel on the front and rear axles.

The wheel sensors are electromagnet sensors consisting of a permanent magnet core with a coil of wire wrapped around it.

The frequency of the pulse signals generated by magnetic inductance between the sensors and the sensor rings they face is proportional to the rotational speed of the wheels. These pulse signals are sent to the ABS ECU and are used to determine the wheels, rotational status.

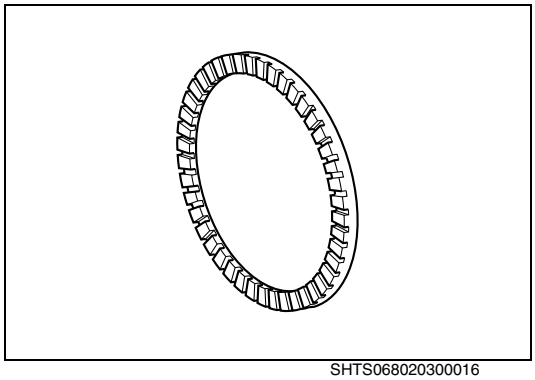

SHTS068020300016

### 4. SENSOR RINGS

The sensor rings are press-fitted into the insides of the wheel hubs of each wheel on the front and rear axles, and they face the wheel sensors described in the preceding section. The sensor rings are made of a magnetic material, and teeth are cut into the surface which faces the wheel sensor at regular intervals. Also, when the sensor ring performs one complete rotation, the sensor generates pulse signals corresponding to the number of teeth.

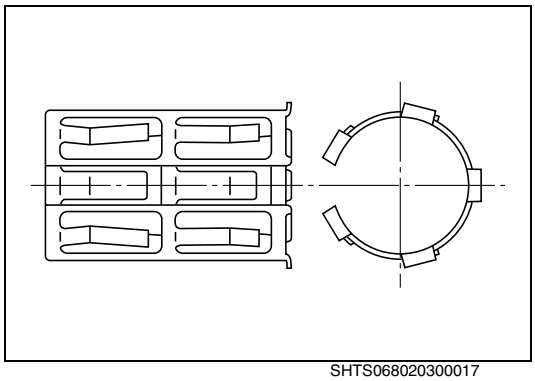

SHTS068020300017

### 5. CLAMPING BUSHINGS

The wheel sensors are held in place through friction by clamping bushings that are inserted into the mounting brackets. If they are assembled properly, the clamping bushings serve to eliminate the need to adjust the clearance between the wheel sensors and sensor rings.

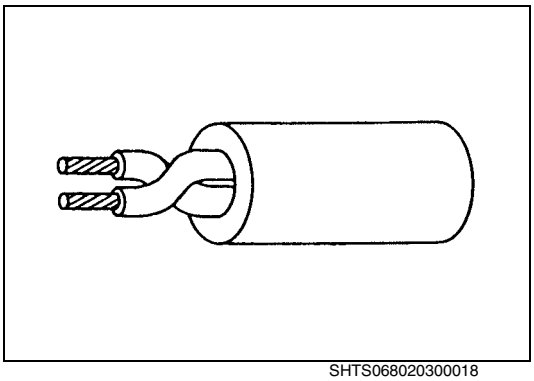

SHTS068020300018

### 6. WHEEL SENSOR HARNESSES

Each wheel sensor wire harness employs a two-conductor twisted wire cable. Its function is to protect the wheel sensor signals, which are vital to the proper operation of the ABS system, from electromagnetic interference. Under no circumstances should any part of the wheel sensor wire harnesses be cut or connected to any other wire.

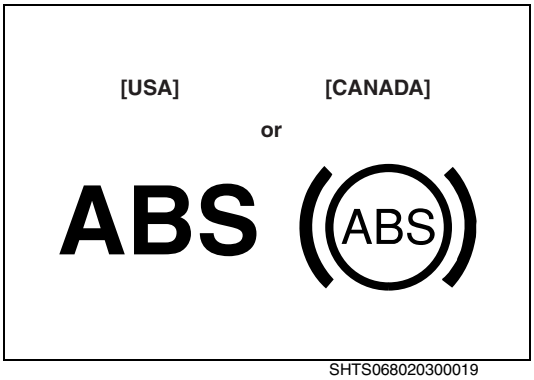


SHTS068020300019

### 7. ABS WARNING LIGHT

The status of the ABS system is indicated.
It lights when the starter switch is turned "ON" and automatically goes off when the system functions correctly.
If malfunction occurs in the ABS system while the vehicle is being driven, the light comes on to alert the driver.
However, when a defects code is eliminated after repairing it and the starter switch is turned "ON", the light will remain lit until the vehicle speed reaches about 6 km/h {4 mile/h}.
Then, note that even when the warning light is lit, the ABS system, unaffected by the malfunction, continues to operate. Also, the brake whose ABS system experiences the malfunction is reverted to normal braking operation without ABS.
When a Diagnosis switch is turned "ON", this light will goes on and off, which indicates defect code.

### 8. EXHAUST BRAKE CUT RELAY

When this relay is energized during ABS operation, the relay contact opens, the current to the solenoid valve for the exhaust brake is shut down, and the exhaust brake is released.

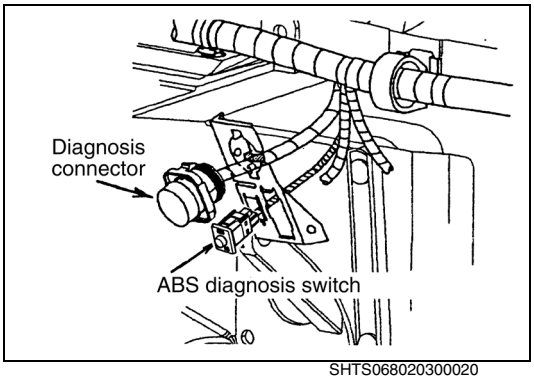


SHTS068020300020

### 9. DIAGNOSIS SWITCH OF ABS SYSTEM

It is positioned at the side of diagnosis connector in the instrument panel of driver seat front side.
By switching the starter key "ON" and pushing to "ON" this ABS diagnosis switch, which is led to the diagnosis mode, the ABS warning light flashes on and off to inform the trouble codes.

**NOTICE**
**ABS diagnosis switch reverts automatically to "OFF" position.**

# INSPECTION (FRONT WHEEL BRAKE)

EN0680203H300001

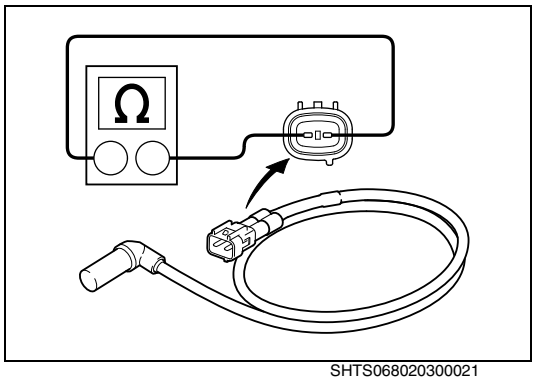


SHTS068020300021

**1. INSPECTION OF ONLY WHEEL SENSOR**

(1) With a tester, measure the resistance of wheel sensor.
**Standard: 900-2,000 Ω**

(2) When the measured value is out of the basic standard, change the wheel sensor as it might be considered presumably to be abnormal.

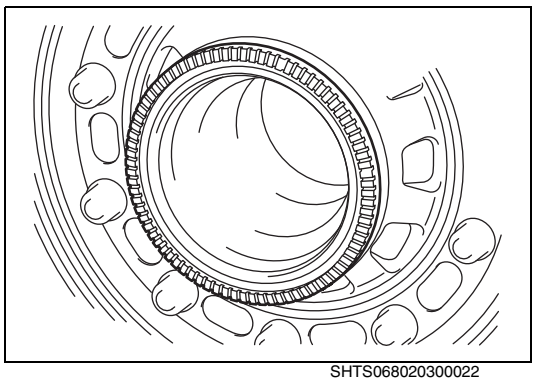

SHTS068020300022

**2. INSPECTION OF THE SENSOR RING.**

(1) Make a visual inspection to check for damage or deformation of the sensor ring, and also to make sure it is not coming loose from the wheel hub.

(2) If any damage or malformation is discovered, replace the sensor ring.

(3) If the sensor ring is coming loose from the wheel hub, use a dolly block and press it in with a press again.

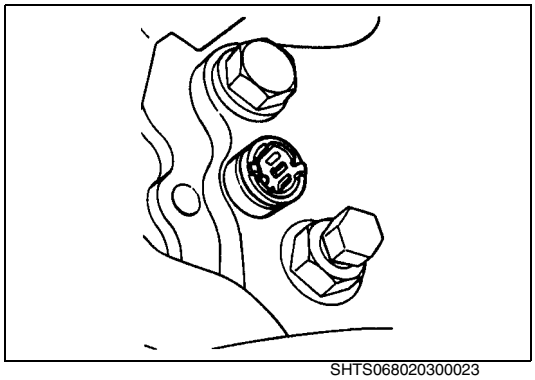

SHTS068020300023

**3. INSPECTION OF THE CLAMPING BUSHING.**

(1) Make sure that wheel sensor is securely fixed.

(2) Change the clamping bushing when it can be pulled off or pushed in with a weak force.

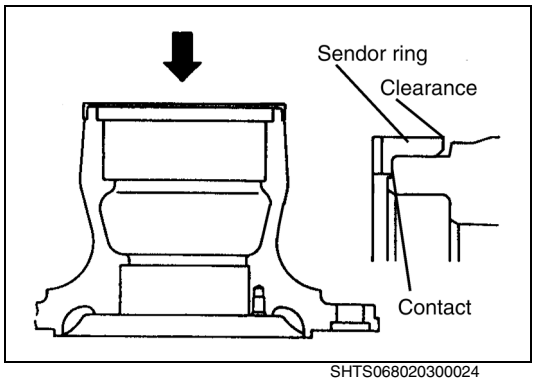


SHTS068020300024

**4. MOUNTING THE SENSOR RING**

(1) Place the sensor ring on the wheel hub and use the dolly block and a press to evenly pressure mount it.

**NOTICE**

**Warming up the sensor ring with hot water will make it easier to pressure mount it. Do not use a gas burner or the like to warm the sensor ring. Doing so could cause malformation of the sensor ring.**

(2) After pressure mounting it, check for flutter of the sensor ring in the axle direction.
**Assembly standard: Less than 0.2 mm {0.0078 in.}**

**5. MOUNTING THE WHEEL HUB AND BRAKE DRUM**

(1) Refer to CHAPTER, FRONT AXLE.

**NOTICE**

**If the wheel sensors are mounted, hammering on the wheel hubs and the like on that axle could cause internal damage to the wheel sensors. Either mount the tire and then tap on the tire or tap on the wheel hub after removing the right and left wheel sensors.**

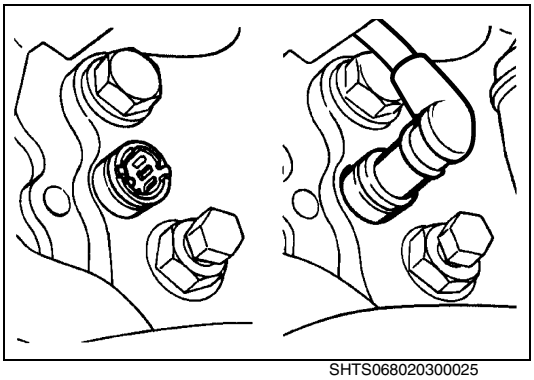

SHTS068020300025

**6. MOUNTING THE WHEEL SENSOR**

(1) Push in the clamping bushing until the stopper makes contact with the knuckle's wheel sensor holder.

(2) Apply a light coating of chassis grease to the hub of the wheel sensor. Then push it forcefully into the clamping bushing until you feel that the wheel sensor has made contact with the sensor ring.

**NOTICE**

**When inserting the wheel sensor, do not tap on it with a hammer or attempt to pry it into place with a screwdriver, or the like. Doing so could damage the wheel sensor.**

(3) Slowly turn the wheel hub and brake drum and confirm that they move smoothly.

(4) Mount the drum dust cover.

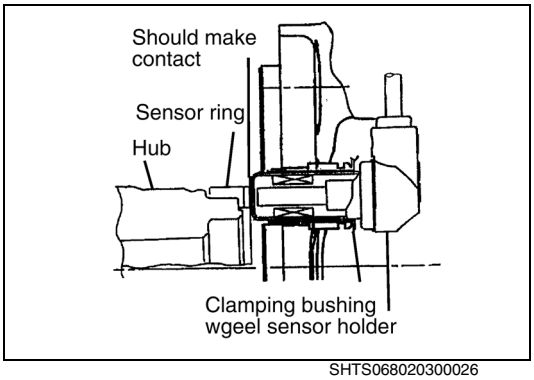


SHTS068020300026

**7. INSPECT THE WHEEL SENSOR**

(1) Arrange the wire harness.

(2) With a circuit tester, confirm the output voltage of the wheel sensor (By rotating the tire by one time for 2 seconds)

**Standard: more than 200 mV**

**(Range of Alternating Current Voltage)**

# INSPECTION (REAR WHEEL BRAKE)

EN0680203H300002

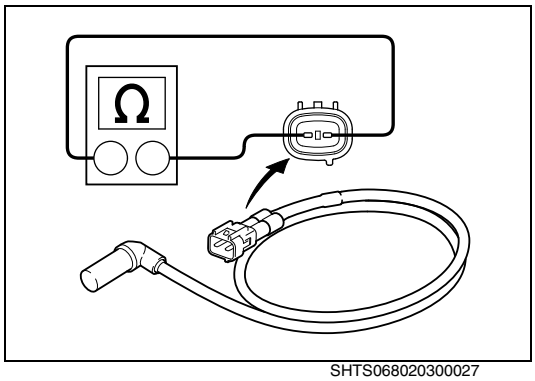

SHTS068020300027

**1. INSPECTION OF ONLY WHEEL SENSOR**

(1) With a tester, measure the resistance of wheel sensor.
**Standard: 900-2,000 Ω**

(2) When the measured value is out of the basic standard, change the wheel sensor as it might be considered presumably to be abnormal.

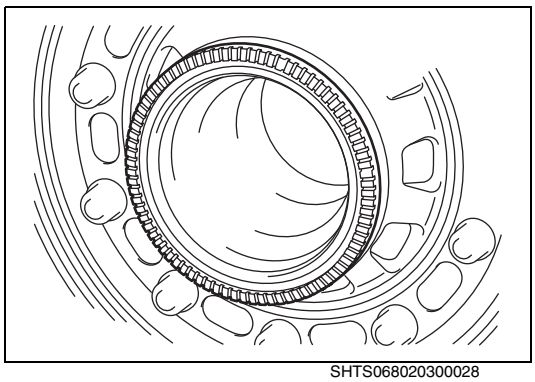
SHTS068020300028

**2. INSPECTION OF THE SENSOR RING.**

(1) Make visual inspection to check for damage or deformation of the sensor ring, and also to make sure it is not coming loose from the wheel hub.

(2) If any damage or malformation is discovered, replace the sensor ring.

(3) If the sensor ring becomes loose from the wheel hub, use a dolly block and a press to pressure mount it again.

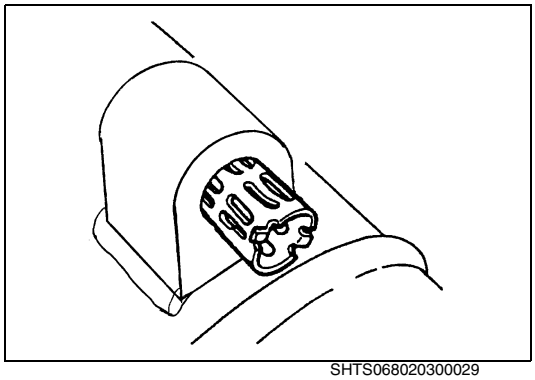
SHTS068020300029

**3. INSPECTION OF THE CLAMPING BUSHING.**

(1) Make sure that the wheel sensor is securely fixed.

(2) Change the clamping bushing when it can be pulled off or pushed in with a weak force.

**4. MOUNTING THE WHEEL SENSOR**

(1) Push in the clamping bushing until the stopper makes contact with the wheel sensor holder.

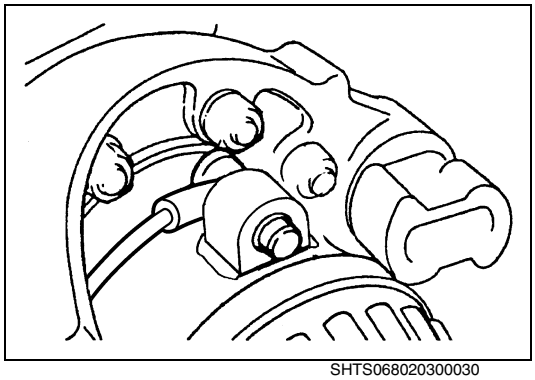
SHTS068020300030

(2) Push the wheel sensor fully in the wheel sensor holder with hands until the wheel sensor makes contact with the clamping bushing.

**NOTICE**

**When inserting the wheel sensor, do not tap on it with a hammer or attempt to pry it into place using a screwdriver, or the like. Doing so could damage the wheel sensor.**

(3) Arrange the wire harness.

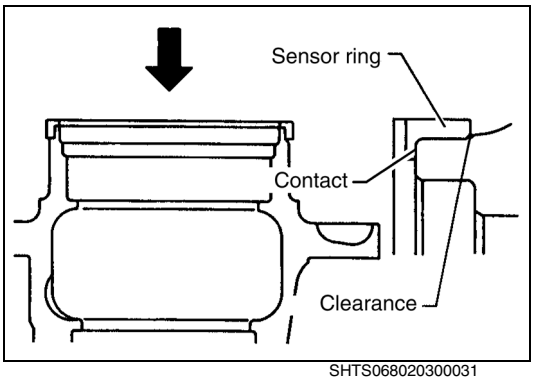

SHTS068020300031

**5. MOUNTING THE SENSOR RING**

(1) Place the sensor ring on the wheel hub and use the dolly block and a press to evenly pressure mount it.

**NOTICE**

**Warming up the sensor ring with hot water will make it easier to pressure mount it. Do not use a gas burner or the like to warm the sensor ring. Doing so could cause malformation of the sensor ring.**

(2) After pressure mounting it, check for flutter of the sensor ring in the axle direction.
**Assembly standard: Less than 0.2 mm {0.0078 in.}**

**6. MOUNTING THE WHEEL HUB AND BRAKE DRUM**

(1) Refer to CHAPTER REAR AXLE.

**NOTICE**

- **Be careful not to push back the wheel sensor too far when mounting the wheel hub and brake drum. Also, make sure they are straight so that you do not bump the tip of the wheel sensor.**
- **When inserting the outer hub bearing, avoid tapping on it with a hammer as this will expose the wheel sensor to bumps. Insert the outer hub bearing carefully with a lock nut.**

**7. INSPECT THE WHEEL SENSOR**

(1) Arrange the wire harness.
(2) With a circuit tester, confirm the output voltage of the wheel sensor (By rotating the tire by one time for 2 seconds)
**Standard: more than 200 mV**
**(Range of Alternating Current Voltage)**
(3) In case of out of the standard range at 2), remove the dust cover located on the back-plate unit. Then push the wheel sensor by using a round end bar until the sensor contacts with the sensor ring.

**NOTICE**

**Do not tap with a hammer or turn when pushing the wheel sensor. This may damage the wheel sensor.**

(4) Mount the axle shaft to the wheel hub and tighten the bolt on the axle shaft.
Refer to CHAPTER, REAR AXLE.

**8. ABS WIRE HARNESSES**

(1) Front axle ABS wire harnesses

- The front axle chassis harnesses, particularly the ones that pass over the front axle and extend as far as the wheel sensors, must absorb the movement when the wheels are turned and when the springs move. It is therefore necessary to always maintain an optimal spacing between the clips.
In addition, if there is a large amount of variation in the spacing between the clips, the wheel sensor harnesses can come into contact with tire chains and sustain damage.
The wire harness for the front axle wheel sensor extends directly from the clip on top of the king pin cover to the frame. In particular, make sure that the distance between the clip on top of the king pin cover and the clip on the frame side is as indicated in the diagram below. There are markings on the wheel sensors in cases where the wheel sensor harness clips are in locations where the relative movement is particularly great. These places should be inspected regularly to ensure that the clip positions are still meeting with the same marking.

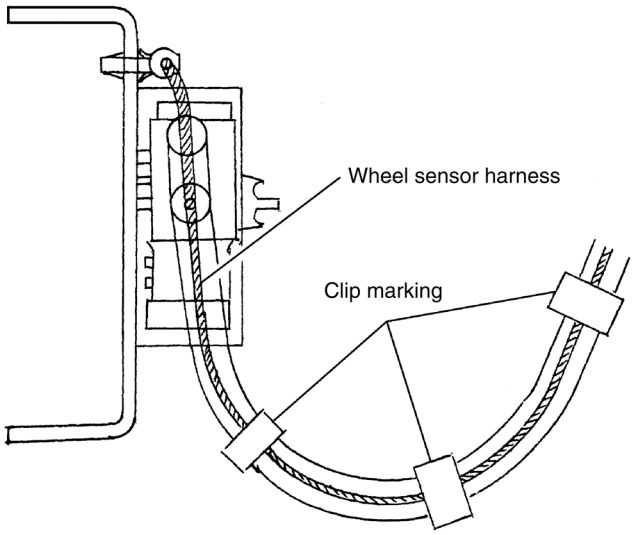


**You shold lead the ABS wheel sensor harness back with the air hose.**

SHTS068020300032

(2) Rear axle chassis harness

- The rear axle chassis harnesses is arranged so that the left and right wheel sensor harnesses are near each other. Therefore, special care should be taken not to make incorrect connections if the harnesses have been removed for inspection or repairs.
  If incorrect connections are made, it will interfere with the functioning of the ABS system. For this reason, caution plates indicating "LEFT" and "RIGHT" are affixed to the harnesses. Be sure to check when connecting the harnesses. (The left harness is on the left side of the vehicle when viewed from the behind and facing toward the front, and the right harness is on the right side of the vehicle.)
  The wheel sensor harnesses are arranged along the top of the rear axle housing. Therefore, make sure to allow sufficient harness length between the chassis and the rear axle so that the harnesses can absorb the up-and-down motion of the rear axle.

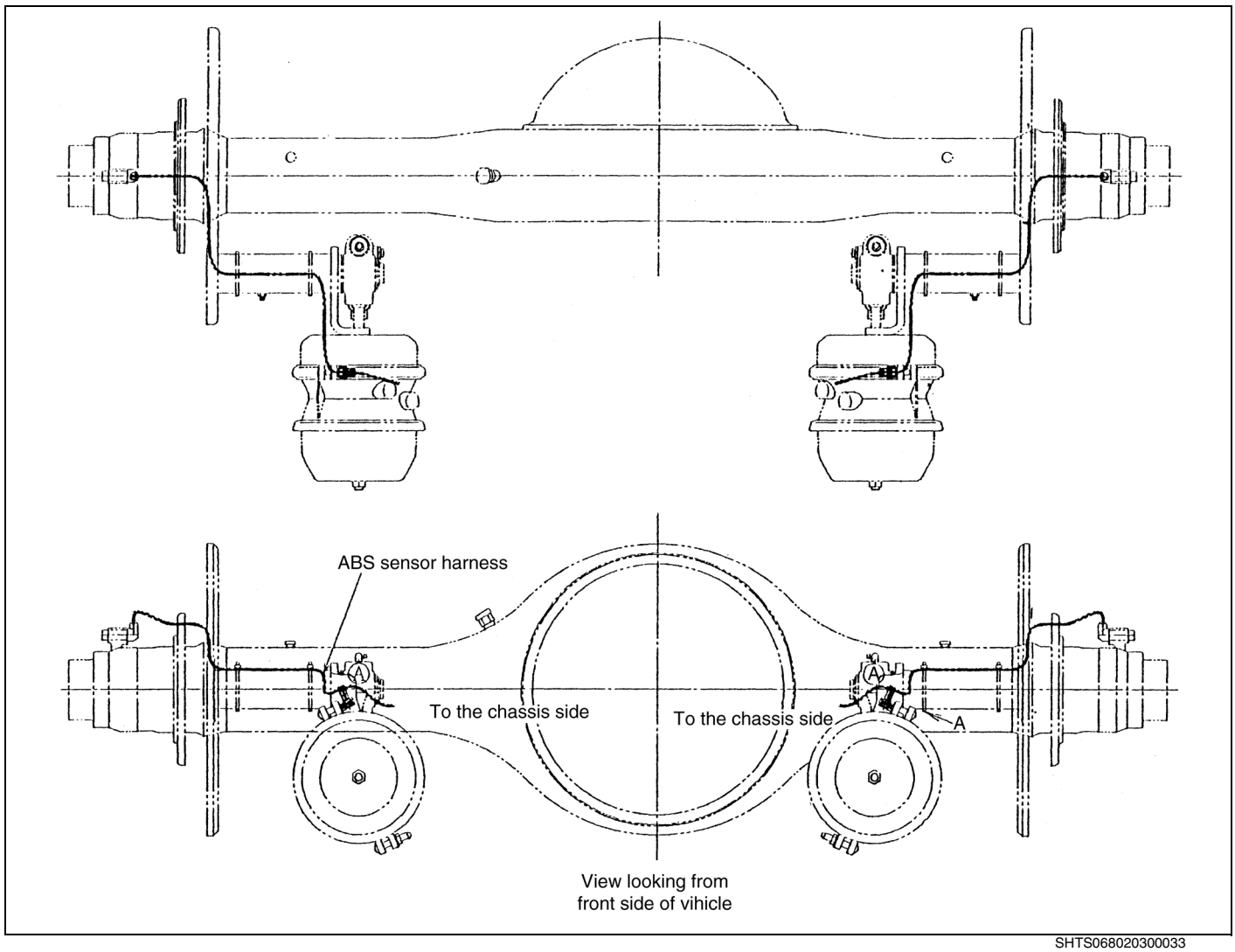


SHTS068020300033

## HANDLING WIRE HARNESSES

- The various sensors, valves, relays and wire harness connections to the ABS ECU employ multipolar harness connectors suitable for use with the weak currents used by electronic circuitry. Be very careful when handling them.

1. **Place the starter switch on "LOCK" before unplugging the harness connectors.**

2. **When unplugging the harness connectors, release the lock, hold the housing and unplug it straight as much as possible.**

3. **Do not pull holding the wire harness or pull with excessive force. Doing so can cause the pins of the harness connectors to be deformed.**

4. **Remove unnecessary connectors and do not plug them.**

5. **When inspecting using a circuit tester, insert the test probe from the wire harness side.**
   **Never insert the test probe from the pins of harness connectors as this can cause bad contacts.**

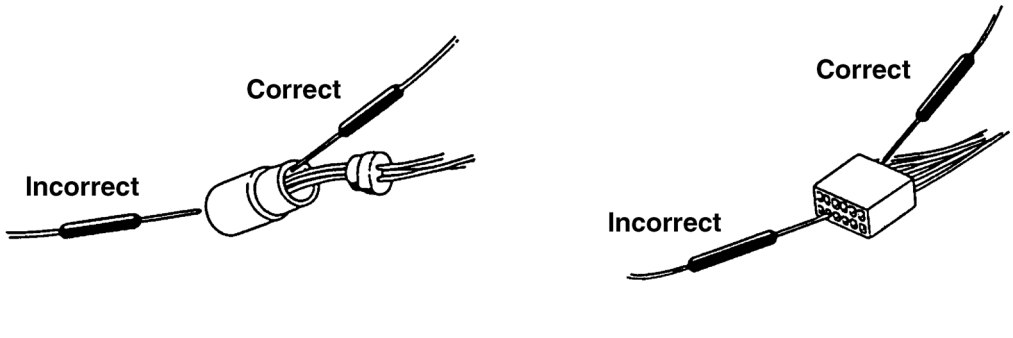


**How to insert test probe**

SHTS068020300034

6. **When unplugging the harness connectors, do not allow water, oil, dust, or any other liquid or substance to get on the terminals as they can cause bad contacts.**

7. **Be careful not to allow water, oil, dust, or any other liquid or substance to get on any component.**

8. **When plugging the harness connector, insert it completely and confirm that the harness connector lock is engaged.**

## ADDITIONAL PRECAUTIONS

**1. Make sure the model's starter switch is in the OFF position before unplugging the harness connector from the ABS ECU.**

**2. Make sure to unplug all the harness connectors from the ABS ECU before performing welding on the chassis or body of the vehicle. Also be careful that welding sputter does not get onto the harnesses.**

**3. When cleaning the interior of the model, make sure water does not get onto the ABS ECU, various relays, connectors, or any other component.**

**4. Use of a circuit tester**

- If a circuit tester is being used, always use one with an internal resistance greater than 100 kΩ inside the voltage measurement range.

**5. Installation of a radio or other electronic equipment**

- All electronic and radio equipment installed on the vehicle must be mounted as far away from the ABS ECU and wire harness as possible. Installation of certain electronic and radio equipment can also cause the ABS ECU to malfunction. All such equipment must also conform to all applicable laws. If you wish to install a radio or other electronic equipment, please contact your Hino service representative.

**6. Quick battery charge**

- When charging batteries using a quick charger, do it with both battery terminals removed.

**7. Installation of electrical equipment inside of the cab**

- When installing an air conditioner or other electrical equipment inside of the cab, be careful not to damage the engine, chassis, and wire harnesses inside the cab. Moreover, do not forget to plug the harness connectors unplugged during the installation.

# EXHAUST BRAKE

BR05-001

**EXHAUST BRAKE SYSTEM ..... BR05-2**
SYSTEM DIAGRAM ..... BR05-2
TROUBLESHOOTING ..... BR05-3
ADJUSTMENT ..... BR05-3

**BRAKE CYLINDER ..... BR05-5**
DATA AND SPECIFICATIONS ..... BR05-5
DESCRIPTION ..... BR05-5

# EXHAUST BRAKE SYSTEM

## SYSTEM DIAGRAM

EN06Z0805J100001

**Manual transmission**

Fine line : Electric line
Thick line : Air line
Dotted line : In case of manual transmission

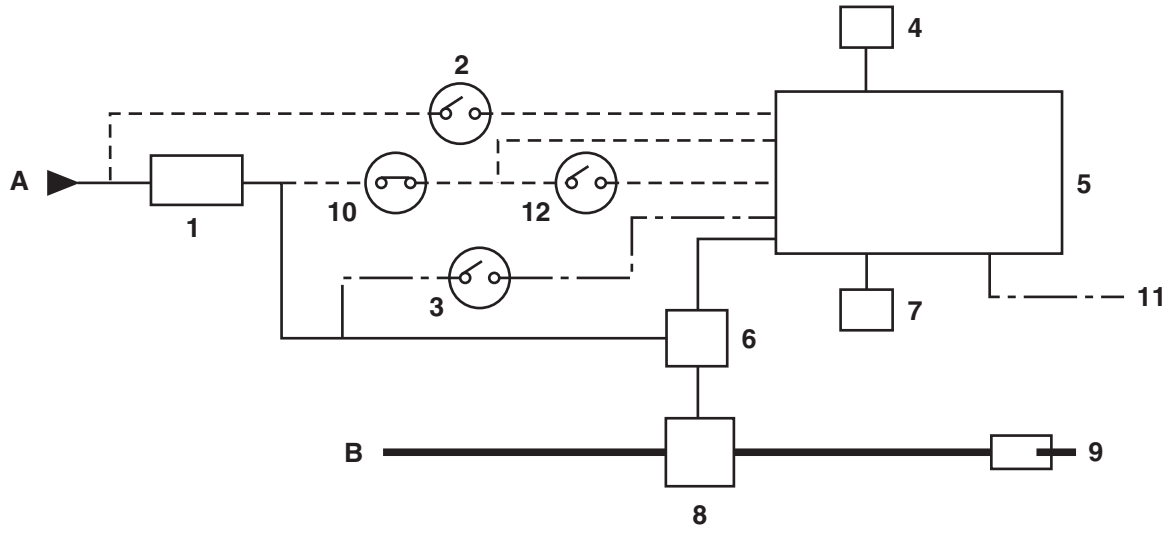


**Automatic transmission and ultrashift transmission**

No. 2, 10 and 12 circuit are less. Three is No. 3 instead of this with automatic transmission and UltraShift transmission. (One point chain line)

SAPH06Z080500001

| | | | |
|---|---|---|---|
| **1** | **ABS exhaust cut relay** | **8** | **Exhaust brake magnetic valve** |
| **2** | **Neutral switch (Manual T/M)** | **9** | **Exhaust control cylinder** |
| **3** | **Wiper and retarder switch (Automatic T/M)** | **10** | **Exhaust clutch switch (Manual T/M)** |
| **4** | **Exhaust brake light** | **11** | **Signal of neutral** |
| **5** | **Engine ECU** | **12** | **Wiper and retarder switch (Manual T/M)** |
| **6** | **Exhaust relay** | **A** | **From power source** |
| **7** | **Signal of engine stop** | **B** | **From air tank** |

# TROUBLESHOOTING

EN06Z0805F300001

| Symptom | Possible cause | Remedy/Prevention |
|---|---|---|
| **Switch does not work** | Defective contacts | Check and correct. |
| | Open circuit in harness | Check and correct. |
| **Valve does not close** | Valve clogged with carbon | Remove carbon. |
| | Burnt shaft | Check and correct. |

# ADJUSTMENT

EN06Z0805H300001

## ACCELERATOR SWITCH ADJUSTMENT

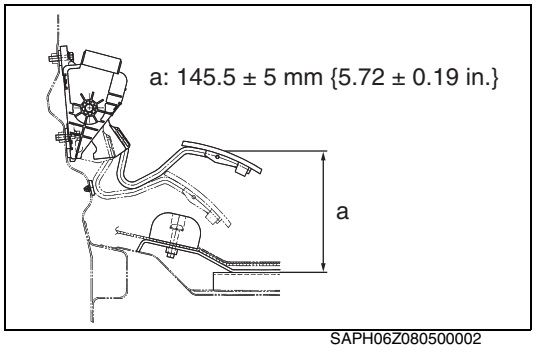

SAPH06Z080500002

**1. ADJUST THE ACCELERATOR PEDAL HEIGHT.**

(1) Adjust the accelerator pedal height at the accelerator pedal assembly mounting section.

(2) ADJUST THE OUTPUT VOLTAGE OF THE ACCELERATOR PEDAL STROKE SENSOR.

a. Use HINO DX II to check the output voltage of the accelerator pedal stroke sensor. In case the output voltage does not conform to the standard, shift the mounting position of the sensor in the direction of rotation (at the long hole of the sensor) for adjustment or replace the sensor with new one.

**Specific value** **Units: V**

| | | |
|---|---|---|
| **Idle (Pedal stroke: 0 mm {0 in.})** | **Sensor No.1** | **0.7-1.0** |
| | **Sensor No.2** | **1.5-1.8** |
| **Full (Pedal stroke: MAX)** | **Sensor No.1** | **3.1-4.0** |
| | **Sensor No.2** | **3.9-4.8** |
| **Exhaust brake switch "ON"** | | **0.7-1.0** |

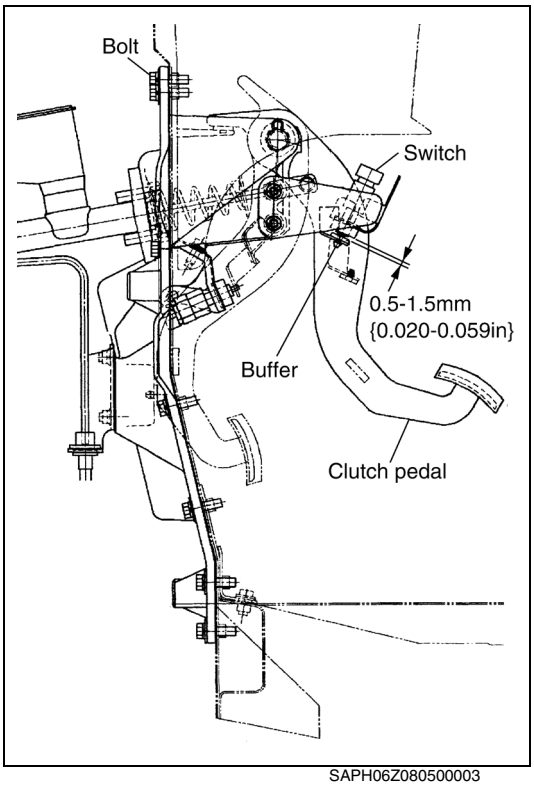

SAPH06Z080500003

## CLUTCH SWITCH ADJUSTMENT (MANUAL TRANSMISSION)

The clutch switch should not be knocked against.
With the clutch pedal release, the clearance between the plastic bush and the clutch switch's tip should be 0.5-1.5 mm {0.020-0.059 in.}.
**Assembly standard: 0.5-1.5 mm {0.020-0.059 in.}**

# BRAKE CYLINDER

## DATA AND SPECIFICATIONS

EN06Z0805I200001

| | |
|---|---|
| Type | Butterfly valve |

## DESCRIPTION

EN06Z0805C100001

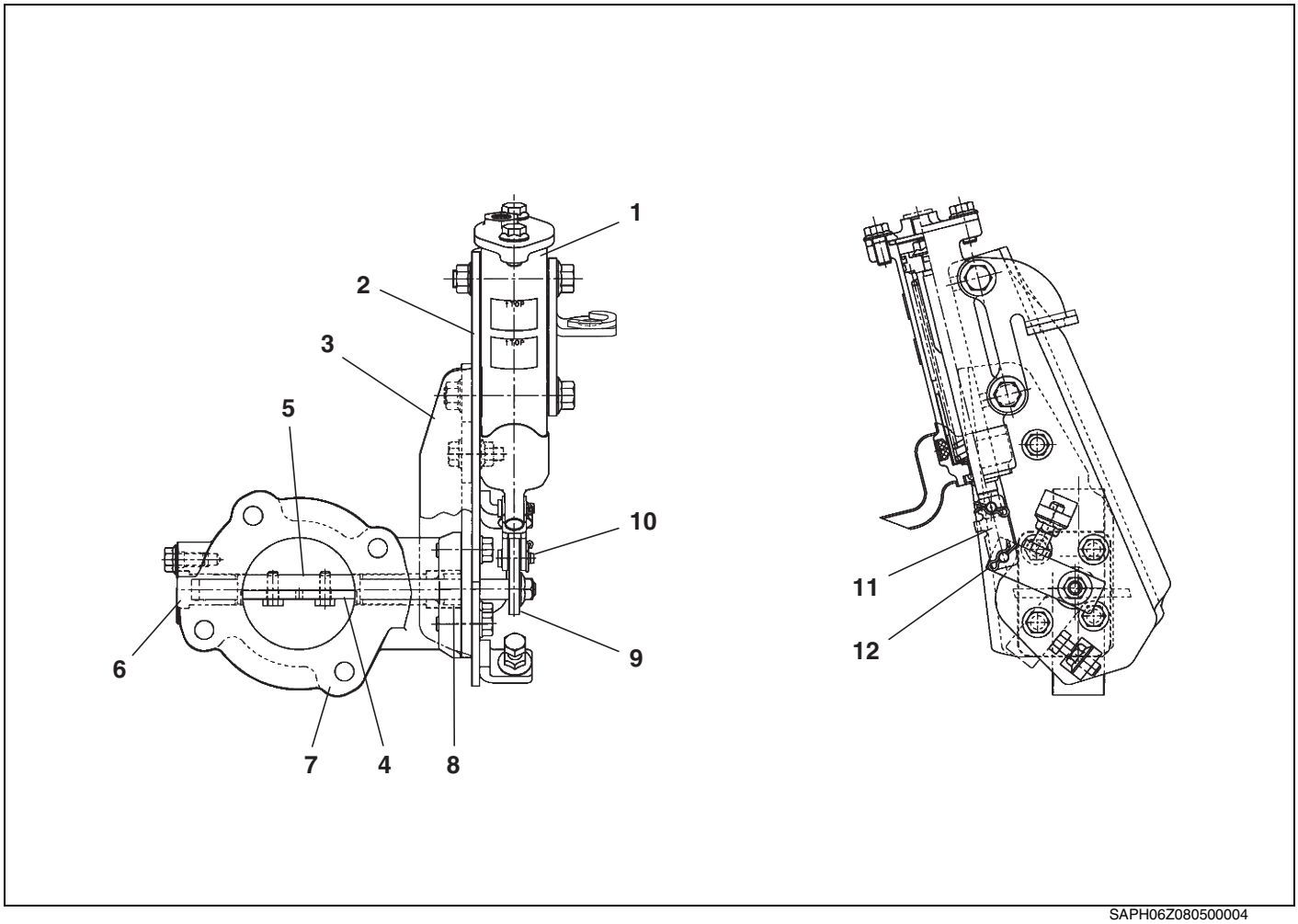


SAPH06Z080500004

| | | | |
|---|---|---|---|
| **1** | **Control cylinder** | **7** | **Body** |
| **2** | **Plate** | **8** | **Seal ring** |
| **3** | **Plate** | **9** | **Lever** |
| **4** | **Valve** | **10** | **Pin** |
| **5** | **Shaft** | **11** | **Clevis** |
| **6** | **Bush** | **12** | **Pin** |

# PARKING BRAKE (BOSCH 12")

BR07-001

**PARKING BRAKE ASSEMBLY ..... BR07-2**

DATA AND SPECIFICATIONS ..... BR07-2
DESCRIPTION ..... BR07-2
TROUBLESHOOTING ..... BR07-3
COMPONENT LOCATOR ..... BR07-4
OVERHAUL ..... BR07-6
INSPECTION AND REPAIR ..... BR07-20
ADJUSTMENT ..... BR07-21

# PARKING BRAKE ASSEMBLY

## DATA AND SPECIFICATIONS

EN16Z0807I200001

| | |
|---|---|
| **Parking brake type** | **Duplex Cam mechanical brake, internal expanding acting type** |
| **Parking brake control type** | **Lever type control with control cable** |
| **Drum inside diameter** | **304.8 mm {12.0 in.}** |
| **Brake lining** | **Width 76.2 mm {3.0 in}** |

## DESCRIPTION

EN16Z0807C100001

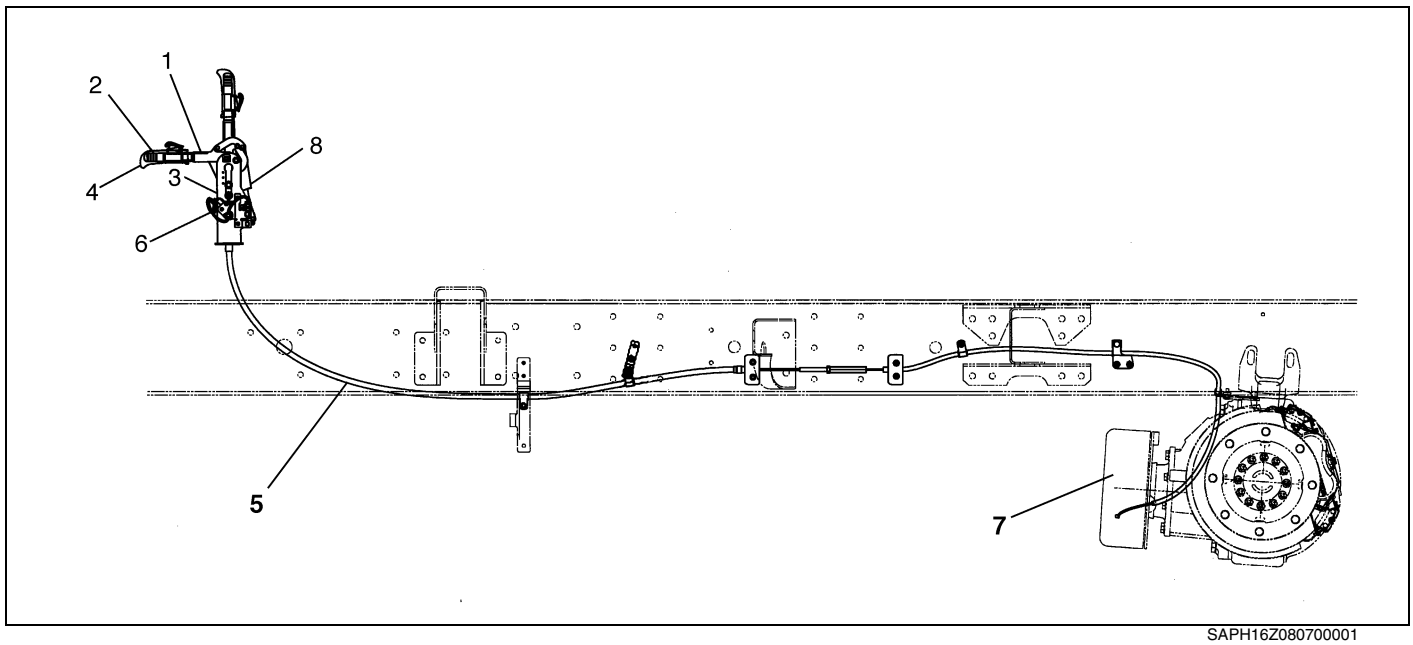


SAPH16Z080700001

| | | | |
|---|---|---|---|
| **1** | **Parking brake lever** | **5** | **Parking brake cable** |
| **2** | **Knob** | **6** | **Parking brake switch** |
| **3** | **Brake lever bracket** | **7** | **Parking brake assembly** |
| **4** | **Knob cover** | **8** | **Damper** |

# TROUBLESHOOTING

EN16Z0807F300001

| Symptom | Possible cause | Remedy/Prevention |
|---|---|---|
| **Light force or lack of resistance when applying brake lever (on manual apply systems)** | Shoe cage under-adjusted (*1) | Adjust shoes per cage adjustment procedure. |
| | Worn or deformed actuation components (lever, cam lugs shoe ends) | Inspect and replace per Anchor Screw, Lever and Cam. Replacement procedure or Shoe Replacement procedure |
| | Maladjusted control linkage | Readjust. |
| **Heavy force or excessive resistance when applying brake lever (on manual apply system)** | Over adjusted brake | Adjust brake cage clearance diameter. |
| | Apply system over adjusted. | Adjust or repair per manufacture's recommended procedures. |
| **Brake does not release.** | Internal damage to brake. | Inspect and replace damaged components. |
| | Apply cable bound up. | Check cable for corrosion, binding, kinks, or damage. |
| | The parking brake lever in the cab is binding | Check the parking brake lever assembly for damage or corrosion. Repair or replace as needed. |
| **Brake does not hold vehicle on hill.** | Grease, oil or other foreign material on or embedded in shoe linings. | Replace shoes and clean drum (*2). |
| | Damaged or incorrect shoes. | Replace with correct shoes. |
| | Worn out lining (metal shoe run contacting drum) | Replace shoes and resurface or replace drum as necessary. |
| | Excessive drum runout. | Resurface or replace drum per manufacturer's recommended procedure. |
| | Shoe cage under-adjusted. | Adjust shoes per primary (or alternate) Shoe Cage Adjustment procedure. |
| | Worn or deformed actuation components (lever, cam lugs, shoe). | Inspect and replace per Anchor, Screw, Lever and Cam. Replacement procedure |

*1: Inspect adjuster components to see if any are damaged or jammed.
*2: Inspect the rear pinion seal for leakage that can contaminate the park brake system part. Repair as necessary.

# COMPONENT LOCATOR

EN16Z0807D100001

## PARKING BRAKE LEVER

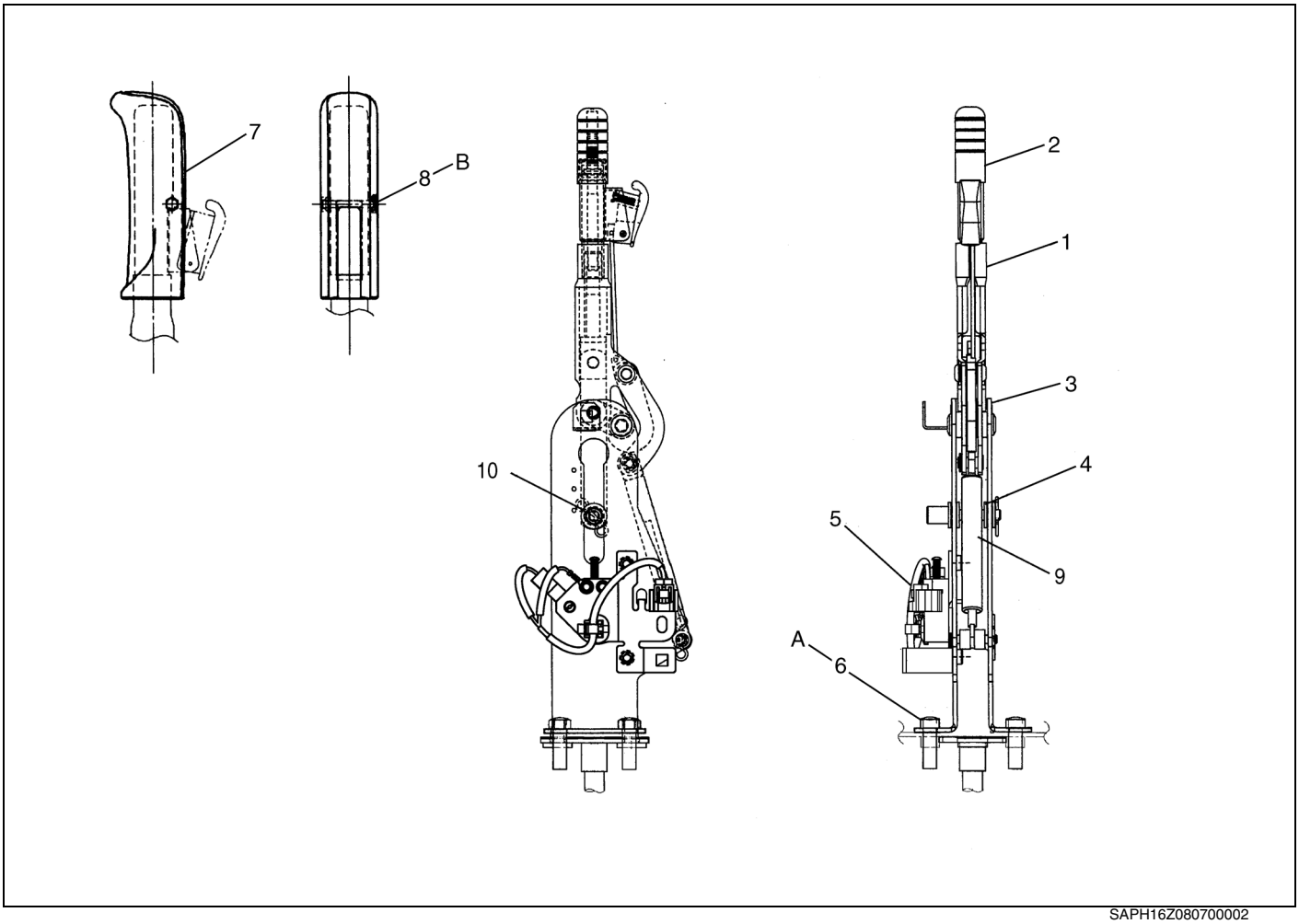


SAPH16Z080700002

| | | | |
|---|---|---|---|
| 1 | Parking brake lever | 6 | Bolt |
| 2 | Knob | 7 | Knob cover |
| 3 | Brake lever bracket | 8 | Bolt |
| 4 | Clevis | 9 | Damper |
| 5 | Parking brake switch | 10 | Roller |

**Tightening torque** **Unit: N·m {kgf·cm, lbf·ft}**

| | | | |
|---|---|---|---|
| A | 42-62 {430-630, 31-46} | B | 1.1-1.9 {12-19, 0.9-1.4} |

## PARKING BRAKE

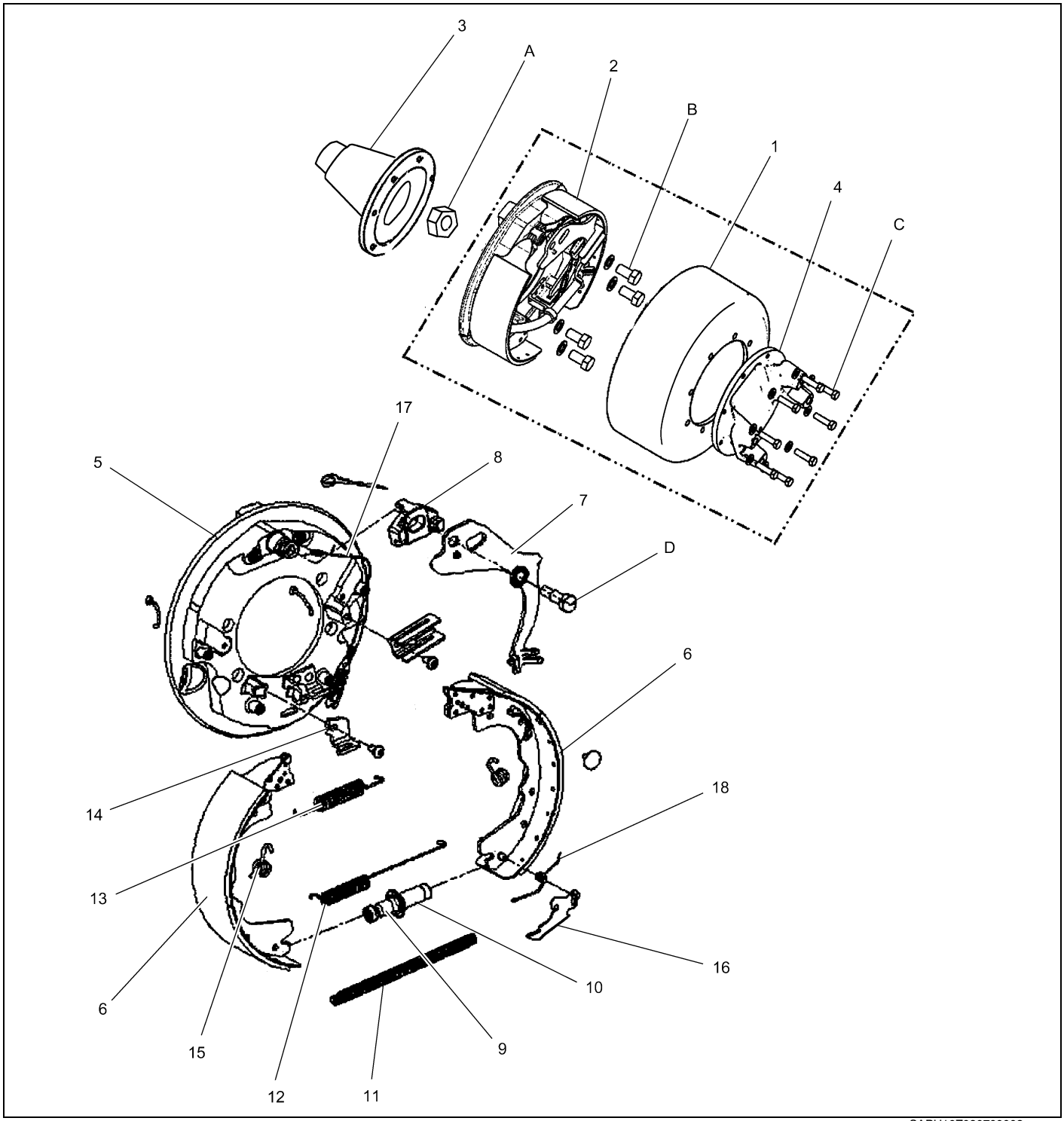


SAPH16Z080700003

| | | | |
|---|---|---|---|
| 1 | Brake drum | 10 | Adjuster nut |
| 2 | Parking brake assembly | 11 | Lever return spring |
| 3 | Companion flange | 12 | Lower return spring |
| 4 | End yoke | 13 | Upper return spring |
| 5 | Backing plate | 14 | Hold-down bracket |
| 6 | Brake shoe | 15 | Hold-down spring |
| 7 | Lever | 16 | Auto adjuster lever |
| 8 | Cam plate | 17 | Adjuster cable |
| 9 | Adjuster screw | 18 | Auto adjuster spring |

**Tightening torque** **Unit: N·m {kgf·cm, lbf·ft}**

| | | | |
|---|---|---|---|
| A | 1,251-1,535 {12,757-15,653, 923-1,132 } | C | 55-75 {561-765, 41-55} |
| B | 270-350 {2,753-3,569, 200-258} | D | 90-110 {918-1,120, 67-81} |

# OVERHAUL

EN16Z0807H200001

## SHOE REPLACEMENT

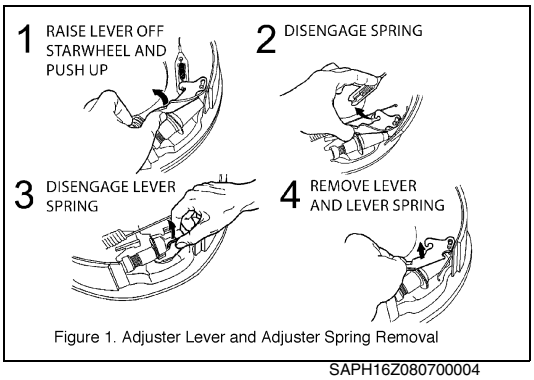

Figure 1. Adjuster Lever and Adjuster Spring Removal

SAPH16Z080700004

**1. REMOVING THE SHOES**

(1) Block the front wheels to keep the vehicle from moving.

(2) With the engine off and battery disconnected, place the transmission in gear and release the parking brake.

(3) If recommended in vehicle manufacturer's service manual, raise the rear of the vehicle so the wheels clear the floor and install safety stands to support.

(4) Remove the drum. See vehicle manufacturer's service manual for details, if necessary.

**⚠ CAUTION**

**Do not use a drum puller or a torch to remove a brake drum. Drum distortion may result.**

**NOTICE**

**If the drum proves difficult to remove, insert a thin flat bladed screwdriver through the brake adjusting hole in the backing plate and disengage the adjuster lever from the adjuster nut teeth. With the adjuster lever disengaged as shown in Figures 8 and 9, insert a brake adjusting tool (or flat bladed screw driver) through the adjusting hole to engage the adjusting nut teeth. Move the teeth upward enough times to retract the brake shoes to clear the drum. If the drum is rusted to the axle input flange yoke pilot, tap the center of the brake drum with a nonmetallic mallet to loosen.**

(5) Inspect the brake per the INSPECTION PROCEDURE in this service manual.

(6) Detach adjuster cable from adjuster lever, slide cable off of adjuster cable guide, and remove the cable retaining tab if so equipped. See Figure 1.

(7) Remove the adjuster lever and the adjuster spring. (These parts will need to be placed on the new replacement shoe, along with the adjuster lever mounting pin, in the opposite order removed.) See Figure 1.

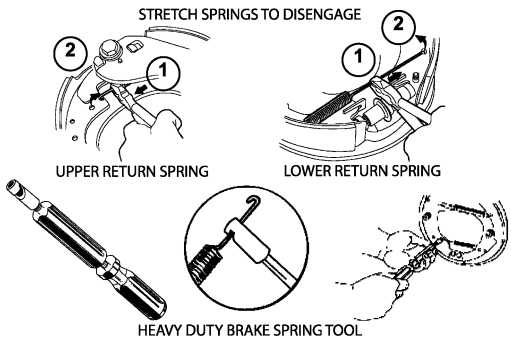


Figure 2. Shoe Return Spring Removal

SAPH16Z080700005

(8) Remove both shoe-return springs. Use pliers, vice-grips, or a heavy duty brake spring tool as shown in Figure 2.

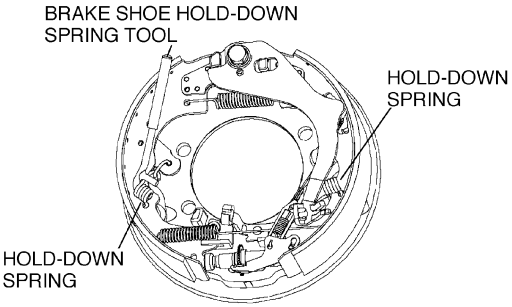


Figure 3. Shoe Hold-Down Spring Removal

SAPH16Z080700006

(9) Remove both shoe hold-down springs. Use a brake shoe spring tool as shown in Figure 3.

**HINT**

**Detach the parking brake apply cable and lever return spring from the end of the lever to allow easier access to the spring on the lever side.**

**NOTICE**

**If the brake is a Release 2 level design with a lever guide present, it will need to be removed to provide access to the spring underneath with the tool shown in Figure 9. Upon removal of the hold down springs, the shoes, and the adjuster nut screw assembly will fall if not secured by hand.**

(10) Remove brake shoes from backing plate.

(11) Disassemble the adjuster nut and screw assembly for cleaning and inspection of the threads.

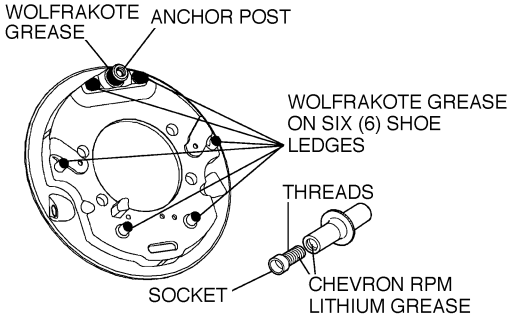


Figure 4. Application of Wolfrakote Paste Grease to Wear Points and Chevron RPM Lithium Shoe Grease to Adjuster Screw

SAPH16Z080700007

**2. INSTALLING THE SHOES**

**⚠ WARNING**

- **Failure to correctly assemble the Adjuster Cable may result in reduced brake performance that could cause personal injury or property damage.**
- **Torque all fasteners to the manufacturer's recommended torque using a torque wrench. Failure to do so could possibly result in personal injury or property damage.**

(1) Clean backing plate and adjuster screw assembly. Remove old grease from shoe contact points and adjuster threads as well as debris and corrosion that could contaminate linings or interfere with proper brake operation.

(2) Apply a light film of Wolfrakote paste ledge grease to the six (6) backing plate shoe ledges and one (1) anchor post as shown in Figure 4.

(3) Apply Chevron RPM heavy duty, lithium complex, molybdenum disulfide, extreme pressure grease, or equivalent, to the cam plate lugs where they contact the shoe ends, the end of the shoes that contact the cam lugs, and the brake lever.

(4) Apply Chevron RPM heavy duty, lithium complex, molybdenum disulfide, extreme pressure grease to the threads of the adjuster screw, adjuster nut, and the socket ends of the adjuster nut and install the screw fully into the adjuster nut. Insure the screw moves in and out freely. If any damage to the threads prohibits free movement, or if the starwheel is damaged, replace adjuster assembly. See Figure 4.

**NOTICE**

- **Only use the approved lubricants as specified. Do not substitute.**
- **When installing new shoes, make sure the shoe with the adjuster cable guide and adjuster lever pin is installed on the correct side of the shoe. See Figure 5.**

(5) Place one shoe into the installed position. Reattach shoe hold-down spring and pin. See Figures 3 and 5.

**⚠ CAUTION**

**For Steps (5) through (10), proper orientation of the various springs, including their hook-ends must be maintained, as shown in Figure 5, for proper brake function.**

(6) Position the second shoe and the adjuster nut and screw assembly as shown in Figure 5. The adjuster nut (internally threaded) should be seated against the shoe with the adjuster cable guide and pin. Reattach shoe hold-down spring to shoe hold-down pin using the brake spring tool as shown in Figure 3.

(7) Install both shoe-return springs as shown in Figure 5.

(8) Install the adjuster spring and the adjuster lever. Ensure that the adjuster lever is properly seated against the starwheel as shown in Figure 5.

(9) If the lever has been removed, reinstall lever and associated components per the ANCHOR SCREW, LEVER, AND CAM REPLACEMENT section in the manual.

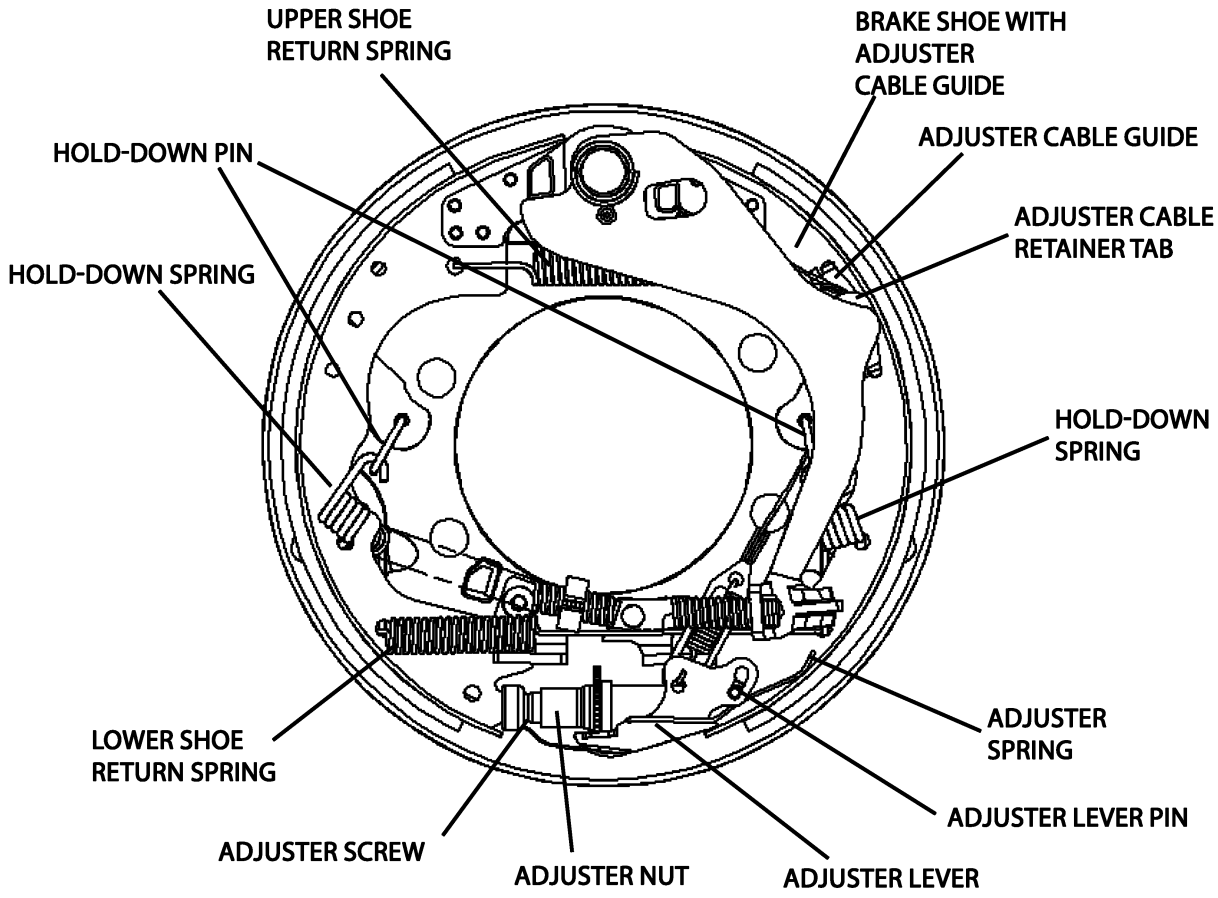


**Figure 5. Brake Shoe Installation**

SAPH16Z080700008

(10) Route the adjuster cable around the adjuster cable guide, under the shoe hold down spring, and attach to the adjuster lever as shown in Figure 6. Install adjuster cable retaining tab if so equipped.

**NOTICE**

**Correctly assembled, the adjuster cable end-fitting is behind the adjuster lever, with the spring hook facing out as shown in Figure 6.**

(11) The shoe cage should be adjusted now per the SHOE CAGE ADJUSTMENT PRIMARY procedure or after the drum has been reinstalled per the SHOE CAGE ADJUSTMENT ALTERNATE procedure in this service manual.

(12) Make a final inspection of the shoe linings and the inside of the drum to ensure that no grease or other contamination was accidentally applied.

**⚠ WARNING**

**Keep grease and other foreign materials away from the shoe lining and drum surfaces. Contamination of shoe linings or drum surface may result in degradation of brake holding capability, possibly resulting in personal injury or property damage.**

(13) Inspect, service and reinstall drum per the vehicle manufacturer's service manual.

(14) Lower the vehicle and test the brake for proper function before returning the vehicle for service use. If necessary, make adjustments per the vehicle manufacturer's service manual.

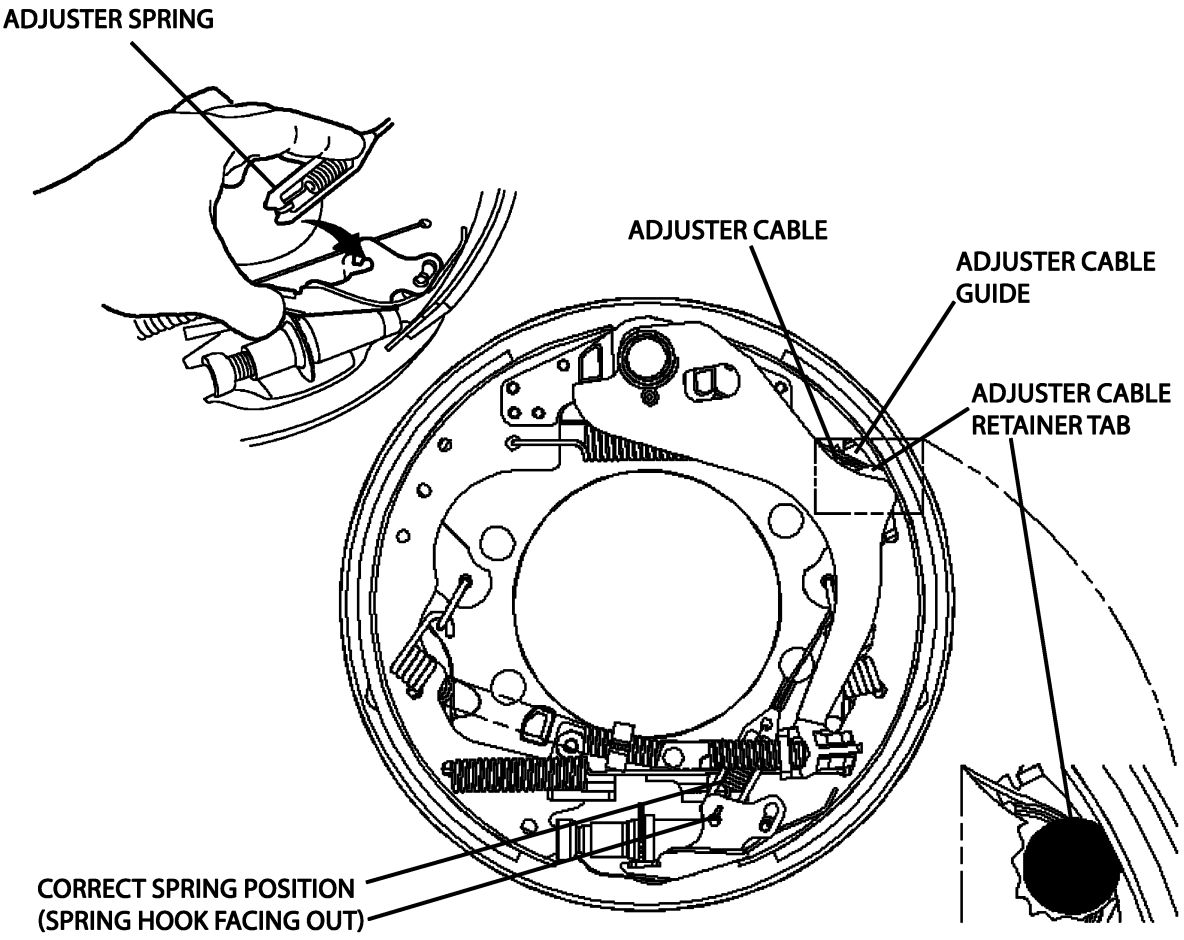


**Figure 6. Adjuster Cable Installation**

SAPH16Z080700009

## SHOE CAGE ADJUSTMENT PROCEDURES

**1. ADJUSTMENT WITH DRUM OFF - PRIMARY PROCEDURE**

(1) Use a 12 inch caliper, or inside micrometer, to measure the inside diameter of the drum. Subtract 0.025 inches from the drum inside diameter measurement. Set the measurement caliper to this value, and lock the set screw.

(2) Rotate the axle input flange yoke as necessary to provide clearance for the measurement caliper.

(3) Place the pre-adjusted caliper over the shoes at the center of the shoes.

(4) To adjust brake, rotate the starwheel until the shoes touch the measurement caliper jaws. It is necessary to disengage the adjuster lever away from the starwheel. See Figure 7.

**NOTICE**

**During adjustment the calipers should be moved up and down around the shoe center points to ensure adjustment at the highest points across the width of the shoes.**

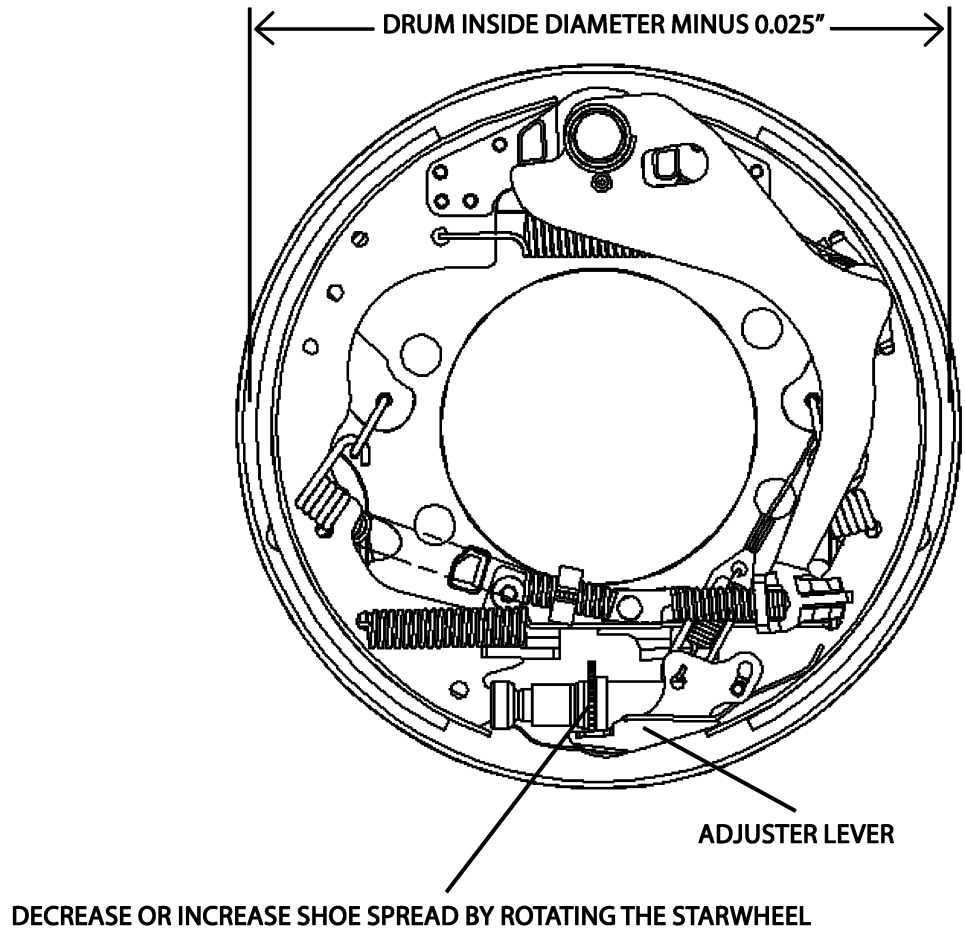


**Figure 7. Initial Brake Shoe Adjustment**

SAPH16Z080700010

**2. ADJUSTMENT WITH DRUM INSTALLED - ALTERNATE PROCEDURE**

(1) With the engine off, the battery disconnected, and the tires blocked to prevent vehicle movement, place transmission in neutral and fully release the parking brake. Check to see if the drum can be rotated back and forth by hand. If the drum cannot rotate, it will be necessary to raise the rear wheels off the ground, in order to allow rotation of the drum. Support the vehicle with suitable floor stands.

**NOTICE**

**Some vehicles may not have enough clearance behind the park brake to have direct access through the access slot to the adjuster lever. In these cases, an adjuster lever tool can be made from 3/32" diameter welding filler rod. See Figure 10.**

(2) Insert the adjuster lever tool or a thin flat bladed screw driver through the adjusting slot in the back-plate and push on the adjuster lever to disengage it from the adjuster starwheel. Insert a brake adjusting tool (or flathead screwdriver) through the adjusting slot and move the starwheel teeth downward to expand the brake shoes outward. See Figures 8 and 9. Continue expanding the shoes until the drum can not be rotated by hand.

(3) Now adjust the starwheel teeth upward to retract the shoes until the drum just begins to rotate freely by hand (without drag from the shoes). See Figures 8 and 9.

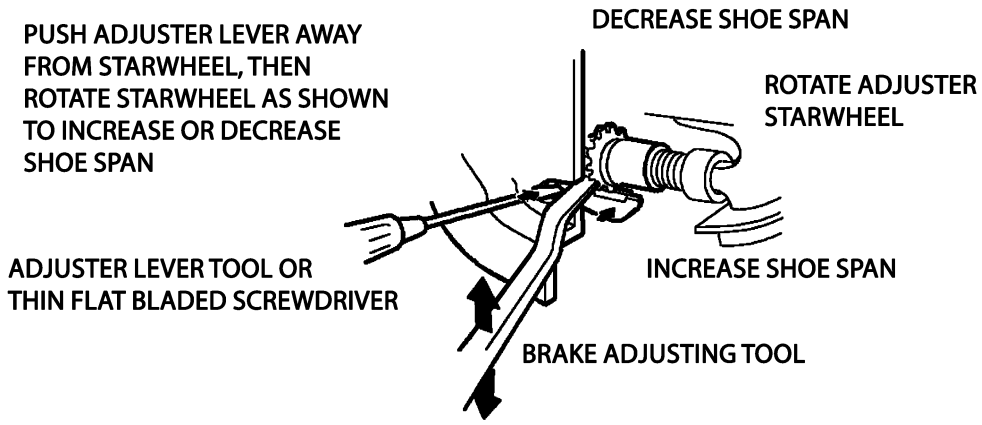


**Figure 8. Brake Adjustment With Drum In Place (cut away view)**

SAPH16Z080700011

**3. DISENGAGING ADJUSTER LEVER FROM ADJUSTER STARWHEEL TO ALLOW RETRACTING THE BRAKE SHOES (LOOSEN BRAKE)**

**NOTICE**

**Some vehicles may not have enough clearance behind the park brake to have direct access through the access slot to the adjuster lever. In these cases, an adjuster lever tool can be made from 3/32 inch diameter welding filler rod. See Figure 10.**

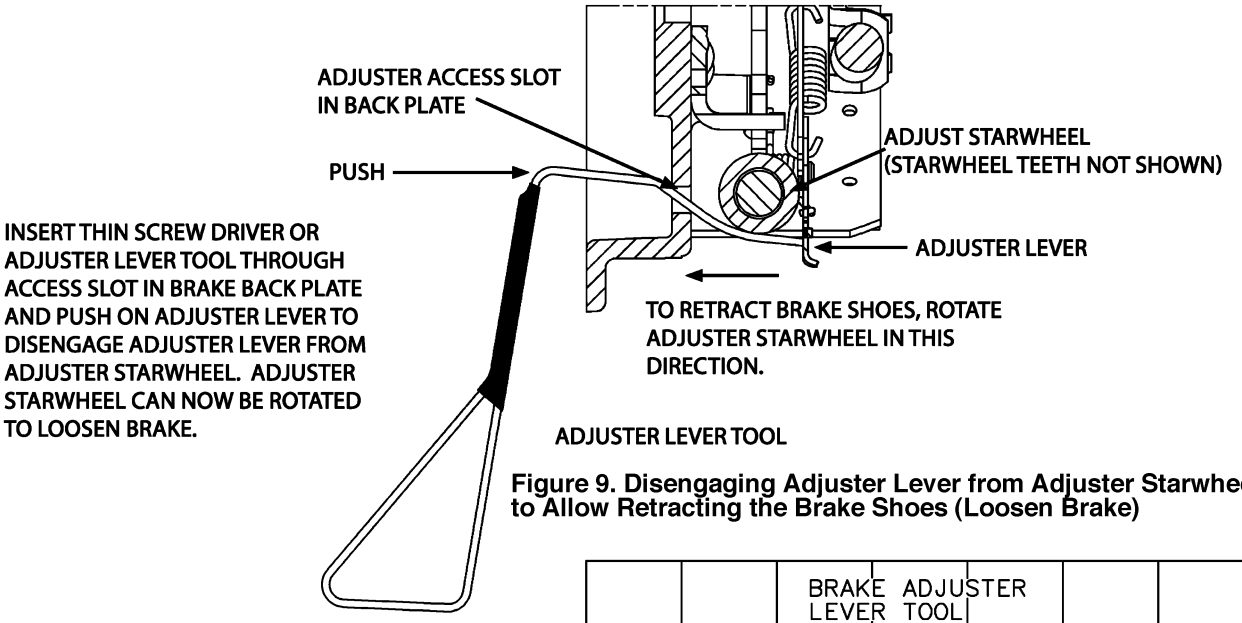


**Figure 9. Disengaging Adjuster Lever from Adjuster Starwheel to Allow Retracting the Brake Shoes (Loosen Brake)**

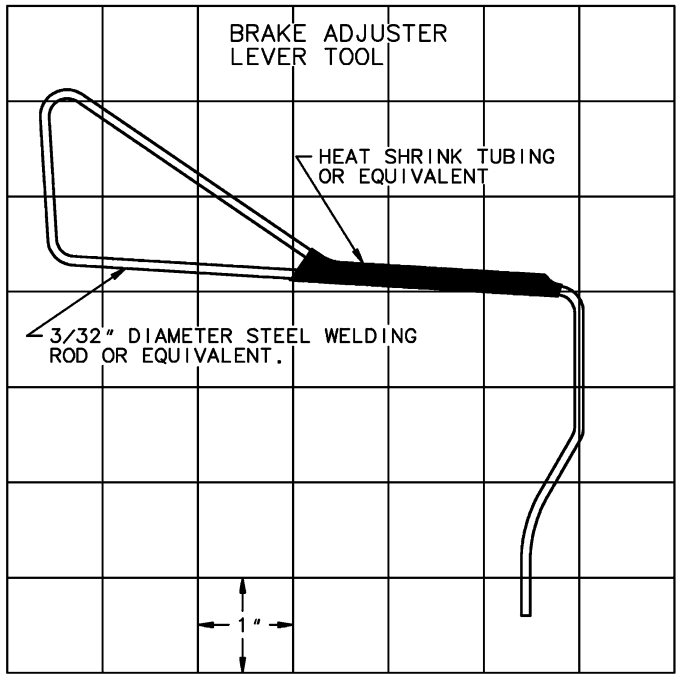


**Figure 10. Brake Adjuster Lever Tool**

SAPH16Z080700012

## ANCHOR SCREW, LEVER AND CAM REPLACEMENT

### 1. REMOVING COMPONENTS

**NOTICE**

**The anchor screw, lever, and cam should all be replaced at the same time. Do not replace just one or two of the three parts at any time. Inspection of these parts is recommended at 250,000 miles or 5 years for typical use, or more often under severe operating conditions.**

(1) Block the front wheels to keep the vehicle from moving.
(2) With the engine off and battery disconnected, place the transmission in gear and fully release the parking brake.
(3) If recommended in vehicle manufacturer's service manual, raise the rear of the vehicle so the wheels clear the floor and install safety stands to support.
(4) Remove the drum. See vehicle manufacturer's service manual for details, if necessary.

**⚠ CAUTION**

**Do not use a drum puller or a torch to remove a brake drum. Drum distortion may result.**

**NOTICE**

**If the drum proves difficult to remove, insert a narrow screwdriver through the brake adjusting hole in the backing plate and disengage the adjuster lever from the adjuster nut starwheel teeth. With adjuster lever disengaged as shown in Figures 8 and 9, insert a brake adjusting tool (or screw driver) through the adjusting hole to engage the adjusting nut teeth. Move the teeth upward enough times to retract the brake shoes to clear the drum. If the drum is rusted to the axle input flange yoke pilot, tap the center of the brake drum with a non-metallic mallet to loosen.**

(5) Inspect the brake per the INSPECTION procedure in this service manual.
(6) Detach the parking brake apply cable and lever return spring from end of brake lever. Remove the apply lever guide (on Release brakes).
(7) Detach adjuster cable from the adjuster lever and slide adjuster cable off the adjuster cable guide, remove retaining tab if so equipped. See Figure 1.
(8) Remove the anchor screw. See Figure 11.

**NOTICE**

**On Release 1 brakes with a hex socket anchor screw, the use of a thread-locking compound may prevent removal of the anchor screw with a hex key and torque in excess of 55 N·m (40 ft.-lbs.) May break or deform a 6 mm hex key. If necessary, use a pipe wrench, vice grips, or similar tool on the knurling of the head to loosen the anchor screw. Replace screw if removed, regardless of condition.**

(9) Remove the flat washers (if installed on your application for Release 1 level brake), anti-rattle spring, lever, cam, and adjuster cable. See Figure 11.

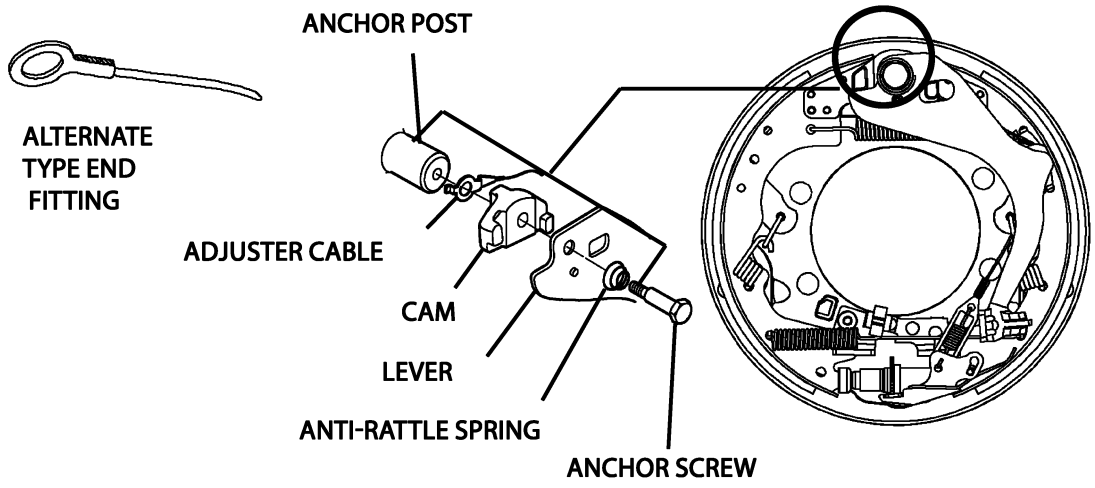


**Figure 11. Spring, Lever, Cam, and Adjuster Cable Removal (Release 3 Brake Shown)**

SAPH16Z080700013

**2. INSTALLING COMPONENTS**

**NOTICE**

**If for any reason the cam, lever, and anchor screw is removed, a complete new set is recommended for service.**

(1) Remove the cured thread-locking compound from the anchor post hole threads. Run the appropriate size tap completely into the anchor post and back out to clean the threads. Remove loose debris from anchor post hole.

**NOTICE**

**For brakes with a hex socket head anchor screw, use an M10 x 1.5 tap (brakes manufactured prior to April 2002). For brakes with an external hex head anchor screw, use and M12 x 1.75 tap (brakes manufactured after April 2002).**

(2) Apply Chevron heavy duty lithium complex extreme pressure grease, or equivalent, to the cam plate lugs where they contact the shoes and the apply lever, to the cam plate slotted hole and top and bottom faces. Apply grease to the brake lever pivot hole and the contact surfaces with the cam plate lugs. Apply grease to the non-threaded portion of the anchor screw. Do not get grease on anchor screw threads or in anchor post threaded hole.

(3) Reinstall the adjuster cable, new cam plate, new lever, anti-rattle spring (small coil end toward screw head for Release 2), flat washers (if previously installed on your application), and new anchor screw as shown in Figure 12. Make sure the adjuster cable end fitting is installed to allow the cam plate to sit flat on the fitting and anchor post.

- Stepped type end fitting - the step faces towards the back-plate. See Figure 12.
- Alternate "eyelet" type fitting - cable crimp portion faces towards the back-plate. See Figure 12.

**⚠ CAUTION**

- **Only thread anchor screw into the anchor post 1 to 2 turns to temporarily hold assembly together. Do not thread in completely until ready to tighten to specification (step (4)).**
- **A faulty installation will result if the thread-locking compound is activated and begins to cure prior to tightening the screw.**
- **When installing the hex socket head anchor screw, careful attention should be taken during reassembly to ensure that the adjuster cable-end fitting is not clamped underneath the shoulder of the anchor screw during reassembly.**
- **Clamping the adjuster cable may prevent proper functioning of the brake selfadjust feature.**

(4) Tighten the anchor screw per the appropriate specification:
For the internal hex socket anchor screw tighten to 50±3 Nm (37±2 ft-lbs.)
For the external hex head anchor screw tighten to 100±10 Nm (74±7 ft-lbs.)

**⚠ CAUTION**

**To tighten the anchor screw, only use a recently calibrated, known good, "clicker" type torque wrench set to the correct torque specification. Do not use add on devices such as universal joints, swivels, crows feet or other devices as these can cause inaccurate tightening results. Do not attempt this repair if a recently calibrated, known good "clicker" type torque wrench is not available.**
**Failure to do so could result in personal injury or property damage.**

**NOTICE**

**Remove excess grease that could contaminate brake drum or linings while the brake is in service.**

(5) Reinstall the lever return spring and parking brake cable to the end of the brake lever.
(6) Route the adjuster cable around the adjuster cable guide, under the shoe hold-down spring, and attach to the adjuster lever as shown in Figure 6. Install adjuster cable retainer tab if equipped.

**NOTICE**

**When correctly assembled, the adjuster cable end-fitting is behind the adjuster lever with the spring hook facing out as shown in Figures 6 and 12. Failure to do so may result in reduced brake operation.**

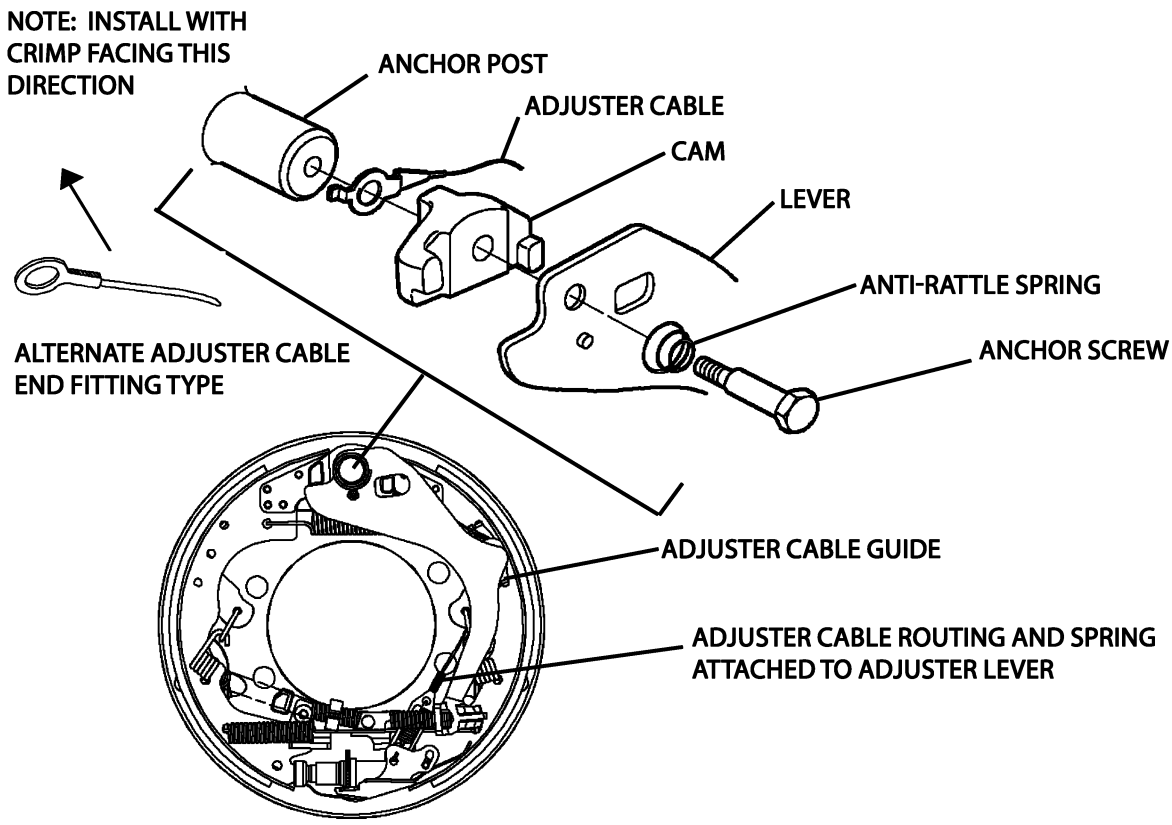


**Figure 12. Install Adjuster Cable, Cam Lever, Anti-rattle Spring and Anchor Screw**

SAPH16Z080700014

(7) The shoe cage should now be adjusted per the SHOE CAGE ADJUSTMENT PRIMARY procedure or after the drum has been reinstalled, per the SHOE CAGE ADJUSTMENT ALTERNATE procedure in this service manual.

(8) Make a final inspection of the shoe linings and the inside of the drum to ensure that no grease or other contamination is present.

**⚠ CAUTION**

**Keep grease and other foreign materials away from the shoe lining and drum surfaces. Contamination of shoe linings or drum surface may result in degradation of brake holding capability, possibly resulting in personal injury or property damage.**

(9) Inspect, service, then reinstall drum per the vehicle manufacturer's service manual.

(10) Lower vehicle and remove the blocks or wheel chocks from the front wheels.

(11) Test the brake for proper function before returning the vehicle for service use. If necessary, make adjustments per the vehicle manufacturer's service manual.

## INSPECTION

**1. INSPECT PARTS.**

**NOTICE**

**It is not necessary to raise vehicle for "inspection" in most cases. However, if required, follow steps (1) through (3) in SHOE REPLACEMENT section.**

**Anytime service is required, it is recommended that a complete visual inspection be performed on all components in the park brake assembly. This includes:**

(1) Follow manufacturer's recommended procedures to ready the vehicle for servicing. Pay attention to all WARNING and CAUTION notes throughout this booklet.
(2) Remove the drum. See section on SHOE REPLACEMENT.
(3) Clean the individual brake components, removing dust and grease.
(4) Visually inspect the brake shoes (Figure 13). Shoes should be replaced if there is uneven lining wear or when the remaining lining reaches 0.76 mm (0.030 in. or approximately 1/32 in.) thickness or less above the shoe. If grease, automotive fluids, or other foreign material that would compromise operation is found on, soaked into or embedded in the linings, the shoes should be replaced. Also, if cracks, excessive deformation, or wear on either end is found, the shoes should be replaced. See section on SHOE REPLACEMENT for service details.
(5) Visually inspect the brake lever and cam (COMPONENT LOCATOR). If cracks, excessive wear, or abnormal deformation is found in either part, they should be replaced. Light wear, which typically shows up as polishing is acceptable. If unsure, replace brake lever, cam plate and anchor screw. See section on ANCHOR SCREW, LEVER, AND CAM REPLACEMENT for service details.
(6) Inspect various springs and hold down pins (Figure 13) for excessive wear, heat discoloration, heavy corrosion or other damage and replace as necessary. See section on SHOE REPLACEMENT for service.

**⚠ WARNING**

**Whenever possible, work on brakes in a separate area away from other operations. Always wear a respirator approved by NIOSH or MSHA during all brake service procedures. NEVER use compressed air or dry brushing to clean brake parts or assemblies. OSHA recommends that you use cylinders that enclose the brake. These cylinders have vacuums with high efficiency HEPA filters and worker's arm access sleeves. But, if such equipment is not available, carefully clean parts and assemblies in the open air.**

**Clean brake parts and assemblies in the open air. During disassembly, carefully handle all parts to avoid getting dust in the air. Use an industrial vacuum cleaner with a HEPA filter system to clean dust from the brake drums, backing plates and other brake parts. After using the vacuum, remove any remaining dust with a rag soaked in water and wrung until nearly dry.**

(7) Inspect adjuster cable assembly for damage or wear (Figure 13). Replace as necessary. See section on SHOE REPLACEMENT for service details.
(8) Inspect adjuster nut and screw (Figure 13) for any damage or corrosion to the threads or burrs, chips, corrosion or other damage to the teeth on the adjuster nut starwheel. Damaged teeth or threads may prevent proper function of the brake self-adjusting function. Replace as necessary. See section SHOE REPLACEMENT for service details.

(9) Clean-out all dust or grease present on the inside of drum. Use a 12 inch caliper or an inside diameter micrometer to measure the manufacturer's recommended inside diameter of the drum. Replace drum if it exceeds maximum inside diameter (which typically is stamped on the inside of the drum near the mounting holes), is worn unevenly, has deep grooves, heavy corrosion or excessive runout.

(10) Inspect the parking brake lever-apply cable for excessive wear or damage, and replace as necessary.

(11) Inspect the axle pinion oil seal for leakage that can contaminate the park brake system parts and repair as necessary. See the section "REAR AXLE" for details.

(12) After a thorough inspection, if the brake and its components are found to be in good working condition, check parking brake for proper shoe cage adjustment. See the section "SHOE CAGE ADJUSTMENT PROCEDURES" for details.

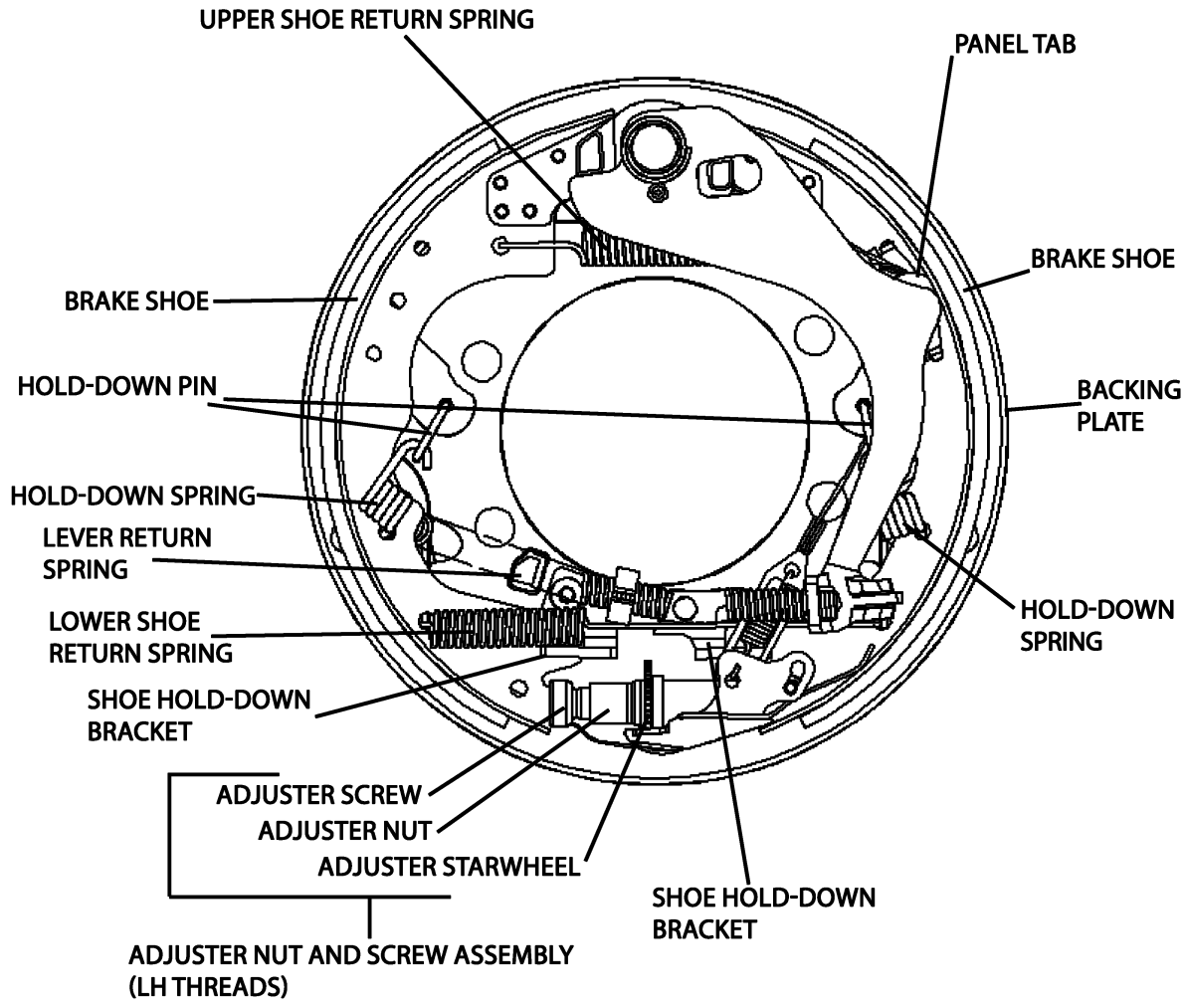


**Figure 13. Brake Shoe Installation**

SAPH16Z080700015

# INSPECTION AND REPAIR

EN16Z0807H300001

**Unit: mm {in.}**

| Inspection item | Standard | Limit | Remedy | Inspection procedure |
|---|---|---|---|---|
| **Brake lining:<br>Lining thickness** | **7.00<br>{0.277}** | **0.76<br>{0.03}** | **Replace.** | **Measure**<br> 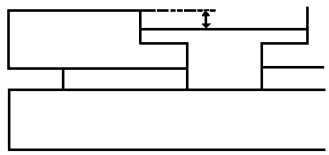 |
| **Brake drum:<br>Inside diameter** | **304.8<br>{12}** | **305.7<br>{12.035}** | **Replace.** | **Measure**<br> 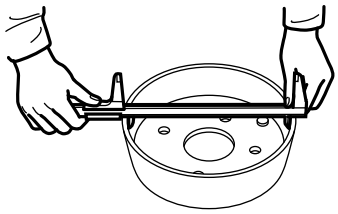 |
| **Parking brake lever:<br>Roller sliding groove width** | **14.8<br>{0.582}** | **16.9<br>{0.665}** | **Replace.** | **Measure**<br> 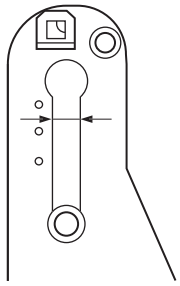 |

# ADJUSTMENT

EN16Z0807H300002

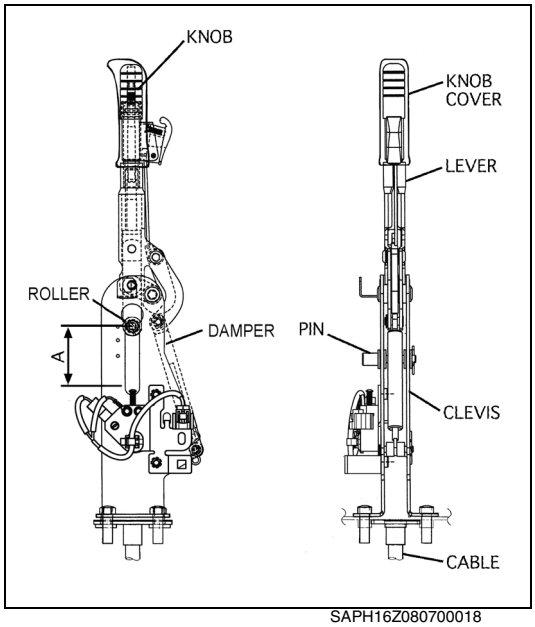

SAPH16Z080700018

**1. INSTALL THE PARKING BRAKE LEVER AND CABLE**

(1) Using the adjustment knob on the lever, set the pin height (Distance A) to the specified value.
Refer to the figure on the left for location measurements.
**Standard: 53-57 mm {2.09-2.24 in.}**

(2) Install the No.1 cable to the cab floor with nuts.

(3) Install the parking brake lever to the cab floor with bolts. Then release the parking brake lever.

(4) Connect the No.1 cable to the parking brake lever with the cable connecting pin.

(5) Connect the No.3 cable to the parking brake assembly.

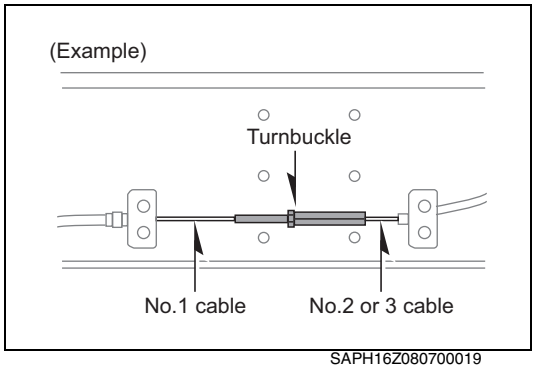

SAPH16Z080700019

(6) Release the parking brake lever. Then, using the turnbuckle in the frame, connect both the No.2 cable (G W/B: No.1 cable) and No.3 cable.

**NOTICE**
**When connecting the cable or adjusting the turnbuckle, confirm that the lever is off and there is no tension on the cable.**

**2. ADJUST THE CABLE**

(1) If a new cable has been installed, using the turnbuckle on the cable, adjust so that the lever pull force is set to 338.5-387.5 N {34.5-39.5 kgf, 76-87 lbf}. Cycle the parking brake lever 30 times.
If the original parking brake cable is used; set the lever pull force to 232.5-281.5 N {23.7-28.7 kgf, 52.3-63.3 lbf}.
However, for minor adjustments, the lever knob can be used as long as the pin height is within 53-57 mm {2.09-2.24 in.}.
When measuring the pull force, do not jerk the tester because the reading will be inaccurate.
Then, confirm that engagement of turnbuckle is 12.7 mm (0.5 in.) or more.

(2) After the pull force adjustment is made, tighten the turnbuckle jam nut to the specified value.
**Standard: 22-32 N·m {224-326 kgf·cm, 16-23.6 lbf}**

(3) Pull the parking brake lever until the parking brake warning light comes on and keep the lever in position. Release the parking brake lever from the position where the parking brake warning light comes on and let it go down naturally.

(4) Confirm that the parking brake lever pin returns to the OFF position and the parking brake warning light goes off.

(5) Reinstall the knob cover and tighten it with bolts to the specified value.
**Standard: 1.1-1.9 N·m {11.2-19.4 kgf·cm, 0.81-1.4 lbf}**
(6) Confirm that there is no feeling of 'drag' from the brake when the parking brake lever is released.
(7) Check that the knob cover has no backlash and the parking brake works properly by actually operating the parking brake lever several times.

**3. BRAKE BURNISHING**

(1) Burnishing of lining
When replacing lining or drum of parking brake with new parts, be sure to perform lapping by the following procedure.
Braking force may be extremely lowered without lapping, so be sure to perform the lapping.

**NOTICE**
**Apply parking brake burnishing only after replacing the lining and in an emergency when the vehicle is moving.**

a. Release parking brake and turn adjusting knob until a control force becomes approximately 18 kgf (40lbf).
b. Mark ten (10) stops from 16 km/h (10 mph) on a dry, hard surface road using only parking brake to stop vehicle.
c. After each stop, release parking brake and drive vehicle at 32 km/h (20 mph) for 4 km (2.5 miles) to cool the brake.
d. After operation, adjust hand lever adjusting knob.

(2) Confirmation of parking brake application.
After completing all-brake adjustment, stop the vehicle on a safe slope or using a brake tester, confirm whether the parking brake is securely applied.

**Hino Motors Sales U.S.A., Inc.**
**41180 Bridge Street, Novi, MI 48375**
**Telephone: (248) 699-9300**
**PRINTED IN JAPAN**

**Pub.No. S1-UNAE14A 1/2 '16.10**

MENU

# FOREWORD

This workshop manual has been prepared to provide information regarding repair procedures on Hino Trucks.

Applicable for HINO 238, 258LP, 268, 338, 358 series, equipped with J08E-VB and J08E-WU engine

When making any repairs on your vehicle, be careful not to be injured through improper procedures.
As for maintenance items, refer to the Driver's / Owner's Manual.
All information and specifications in this manual are based upon the latest product information available at the time of printing.
Hino Motors Sales U.S.A., Inc. reserves the right to make changes at any time without prior notice.

Please note that the publications below have also been prepared as relevant workshop manuals for the components and systems in these vehicles.

| Manual Name | Pub. No. |
|---|---|
| Chassis Workshop Manual | S1-UNAE14A 1/2 |
| J08E-VB, WU Engine Workshop Manual | S5-UJ08E14A |
| Trouble Shooting Workshop Manual | S7-UNAE14A 1/3<br>S7-UNAE14A 2/3<br>S7-UNAE14A 3/3 |

**Hino Motors Sales U.S.A. , Inc.**

# CHAPTER REFERENCES REGARDING THIS WORKSHOP MANUAL

Use this chart to the appropriate chapter numbers for servicing your particular vehicle.

| CHAPTER | | | |
|---|---|---|---|
| | MANUAL NO. | S1-UNAE14A 2/2 (U.S.A.), S1-CNAE14A 2/2 (CANADA) | |
| | MODELS | HINO 238, 258LP, 268, 338, 358 | |
| | Production Model Code | NE8J, NF8J, NJ8J, NV8J, NH8J | |
| GENERAL INTRODUCTION | | GN02-001 | |
| CLUTCH MAIN UNIT | | CL02-001 | |
| CLUTCH CONTROL | | CL03-001 | |
| TRANSMISSION MAIN UNIT | | TR02-001 | |
| AUTOMATIC TRANSMISSION | | TR04-001 | TR04-002 |
| TRANSMISSION/TRANSFER CONTROL | | TR06-001 | TR06-002 |
| PROPELLER SHAFT | | PP02-001 | |
| DIFFERENTIAL CARRIER | | DF02-001 | |
| BRAKE EQUIPMENT | | BR01-001 | BR01-002 |
| SERVICE BRAKE | | BR02-001 | BR02-002 |
| ABS (ANTI-LOCK BRAKE SYSTEM) | | BR03-001 | BR03-002 |
| EXHAUST BRAKE | | BR05-001 | |
| PARKING BRAKE | | BR07-001 | |
| STEERING EQUIPMENT | | SR01-001 | |
| STEERING UNIT | | SR02-001 | |
| POWER STEERING | | SR03-001 | |
| FRONT AXLE | | AX02-001 | |
| REAR AXLE | | AX03-001 | |
| WHEEL & TIRE | | AX04-001 | |
| SUSPENSION | | SU02-001 | |
| CHASSIS FRAME | | FC02-001 | |
| CAB | | CA02-001 | |
| ELECTRICAL EQUIPMENT | | EL01-001 | |
| ELECTRIC WIRE | | EL02-001 | |

This manual does not contain items on half-tone dot meshing.

HINO

# WORKSHOP MANUAL

INDEX: CHASSIS GROUP 1/4


| | |
|---|---|
| GENERAL INTRODUCTION | |
| CLUTCH EQUIPMENT | |
| CLUTCH MAIN UNIT | |
| CLUTCH CONTROL | |
| TRANSMISSION EQUIPMENT | |
| TRANSMISSION MAIN UNIT | |
| TRANSFER MAIN UNIT | |
| AUTOMATIC TRANSMISSION | |
| PTO (POWER TAKE-OFF) | |
| TRANSMISSION / TRANSFER CONTROL | |
| PROPELLER SHAFT EQUIPMENT | |
| PROPELLER SHAFT | |
| DIFFERENTIAL EQUIPMENT | |
| DIFFERENTIAL CARRIER | |
| BRAKE EQUIPMENT | |
| SERVICE BRAKE | |
| ABS | |

INDEX: CHASSIS GROUP 2/4


ES START (EASY & SMOOTH START) SYSTEM

EXHAUST BRAKE

RETARDER BRAKE

PARKING BRAKE

STEERING EQUIPMENT

STEERING UNIT

POWER STEERING

AXLE EQUIPMENT

FRONT AXLE

REAR AXLE

WHEEL & TIRE

SUSPENSION EQUIPMENT

SUSPENSION

CHASSIS EQUIPMENT

CHASSIS FRAME

COUPLER (5TH WHEEL)

PINTLE HOOK

INDEX: CHASSIS GROUP 3/4


CAB EQUIPMENT

CAB

ELECTRICAL EQUIPMENT

ELECTRIC WIRE

HYBRID SYSTEM

INDEX: CHASSIS GROUP 4/4


| | |
|---|---|
| ENGINE CONTROL | |
| FUEL CONTROL | |
| BRAKE CONTROL | |
| SUSPENSION CONTROL | |
| CAB EQUIPMENT CONTROL | |
| OTHERS | |

# STEERING EQUIPMENT

SR01-001

**STEERING SYSTEM..... SR01-2**
TROUBLESHOOTING..... SR01-2

# STEERING SYSTEM

## TROUBLESHOOTING

EN07Z0701F300001

| Symptom | Possible cause | Remedy/Prevention |
|---|---|---|
| **Steering wheel shimmy** | Steering system linkage is loose. | Tighten properly. |
| | Too much wear or play in steering linkage (spline and ball joints). | Replace parts. |
| | Other front axle problems. | Refer to chapter **"FRONT AXLE"**. |
| | Power steering gear badly adjusted. | Refer to chapter **"POWER STEERING"**. |
| | The wheels are out of balance. | Balance the wheels. |
| | Wheel wobbles. | Replace wheel. |
| | Tire air pressure is not uniform or sufficient. | Adjust tire pressure. |
| | Distorted disc wheel. | Replace parts. |

| Symptom | Trouble shooting and repair |
|---|---|
| **Hard steering or poor return of steering wheel to center** | **Reference: STEERING EQUIPMENT, STEERING SYSTEM, TROUBLESHOOTING, STEERING IS HEAVY (Page SR01-3)** |
| | **Reference: STEERING EQUIPMENT, STEERING SYSTEM, TROUBLESHOOTING, STEERING RETURN IS RELUCTANT (Page SR01-4)** |
| **Abnormal noise** | **Reference: STEERING EQUIPMENT, STEERING SYSTEM, TROUBLESHOOTING, ABNORMAL NOISE (Page SR01-5)** |

## STEERING IS HEAVY

**1. CHECK AND CONFIRM THE FOLLOWING POINTS AND TAKE COUNTERMEASURE.**

(1) Check the front tire pressure, and supply compressed air with the specified pressure if insufficient.
(2) Check the tire for abnormal wear and improper groove depth, if any problem found, replace the tire.
(3) Measure the front axle loading, if it exceeds the specified value, correct or empty the cargo.
(4) If frontward cargo causes the excessive front axle loading, correct it by reviewing the weight balance.
(5) If superstructure causes the excessive front axle loading, refurbish the superstructure to reduce loading.
(6) Check the power steering fluid level and replenish if insufficient.

In spite of the above check and countermeasure taken, if the troubles still remain, pursue the true cause with the following procedures, and repair the troubles.

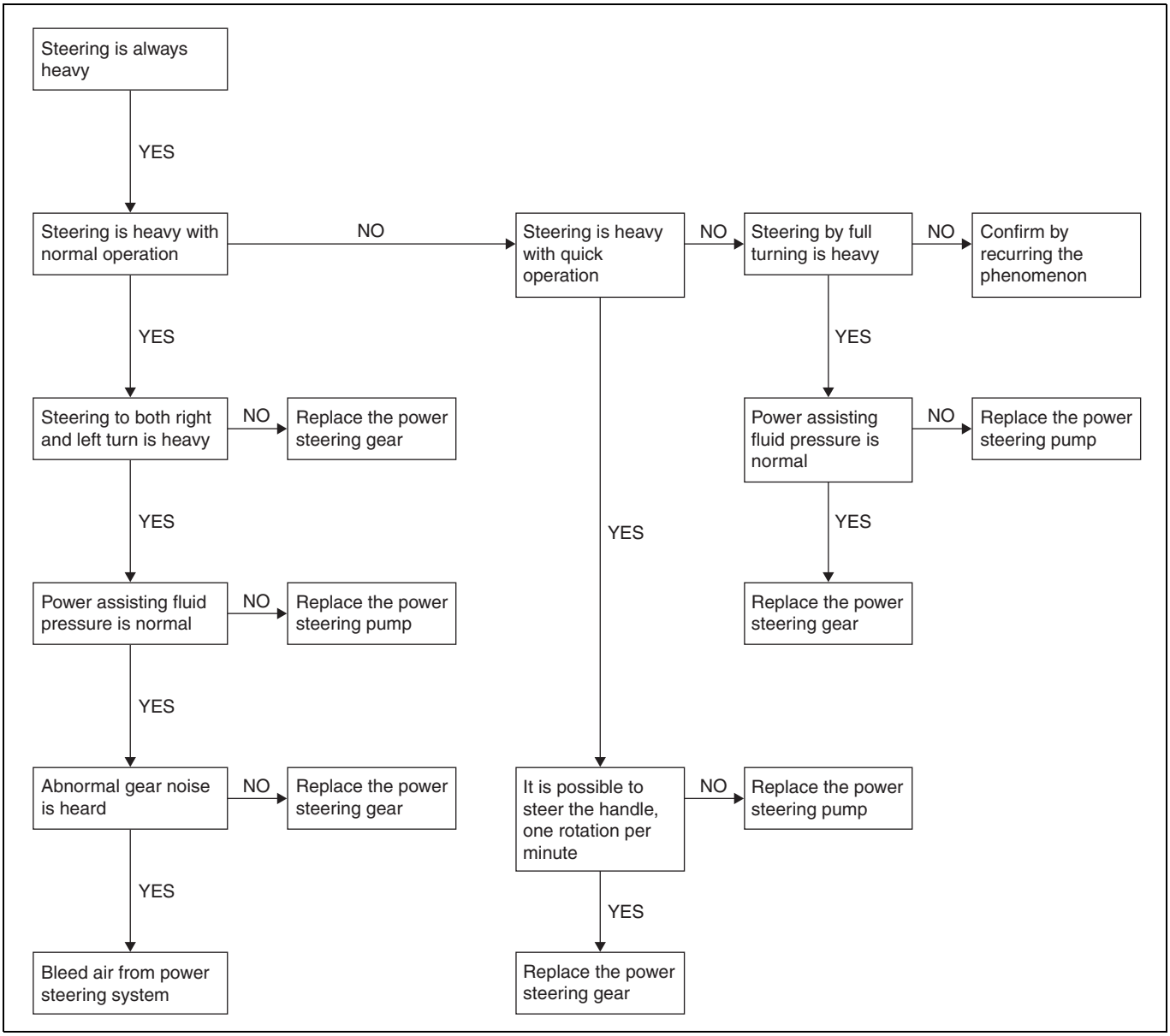


SAPH07ABC0100001

## STEERING RETURN IS RELUCTANT

**1. CHECK AND CONFIRM THE FOLLOWING POINTS AND TAKE COUNTERMEASURE.**

(1) Check the front tire pressure, and supply compressed air with the specified pressure if insufficient.
(2) Check the tire for abnormal wear and improper groove depth, if any problem found, replace the tire.
(3) Measure the front axle loading, if it exceeds the specified value, correct or empty the cargo.
(4) If frontward cargo causes the excessive front axle loading, correct it by reviewing the weight balance.
(5) If superstructure causes the excessive front axle loading, refurbish the superstructure to reduce loading.
(6) Check the power steering fluid level and replenish if insufficient.

In spite of the above check and countermeasure taken, if the troubles still remain, pursue the true cause with the following procedures, and repair the troubles.

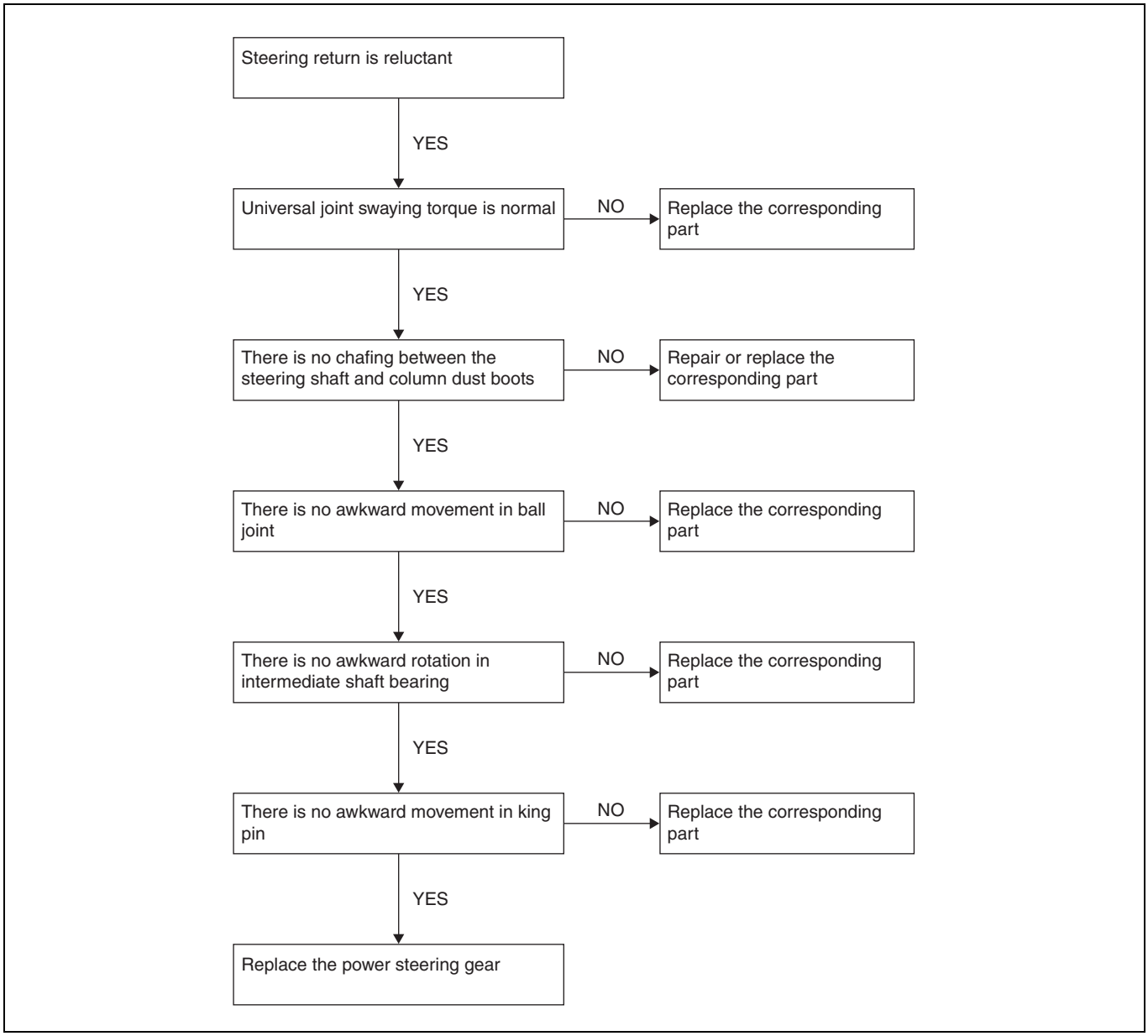


SAPH07ABC0100002

## ABNORMAL NOISE

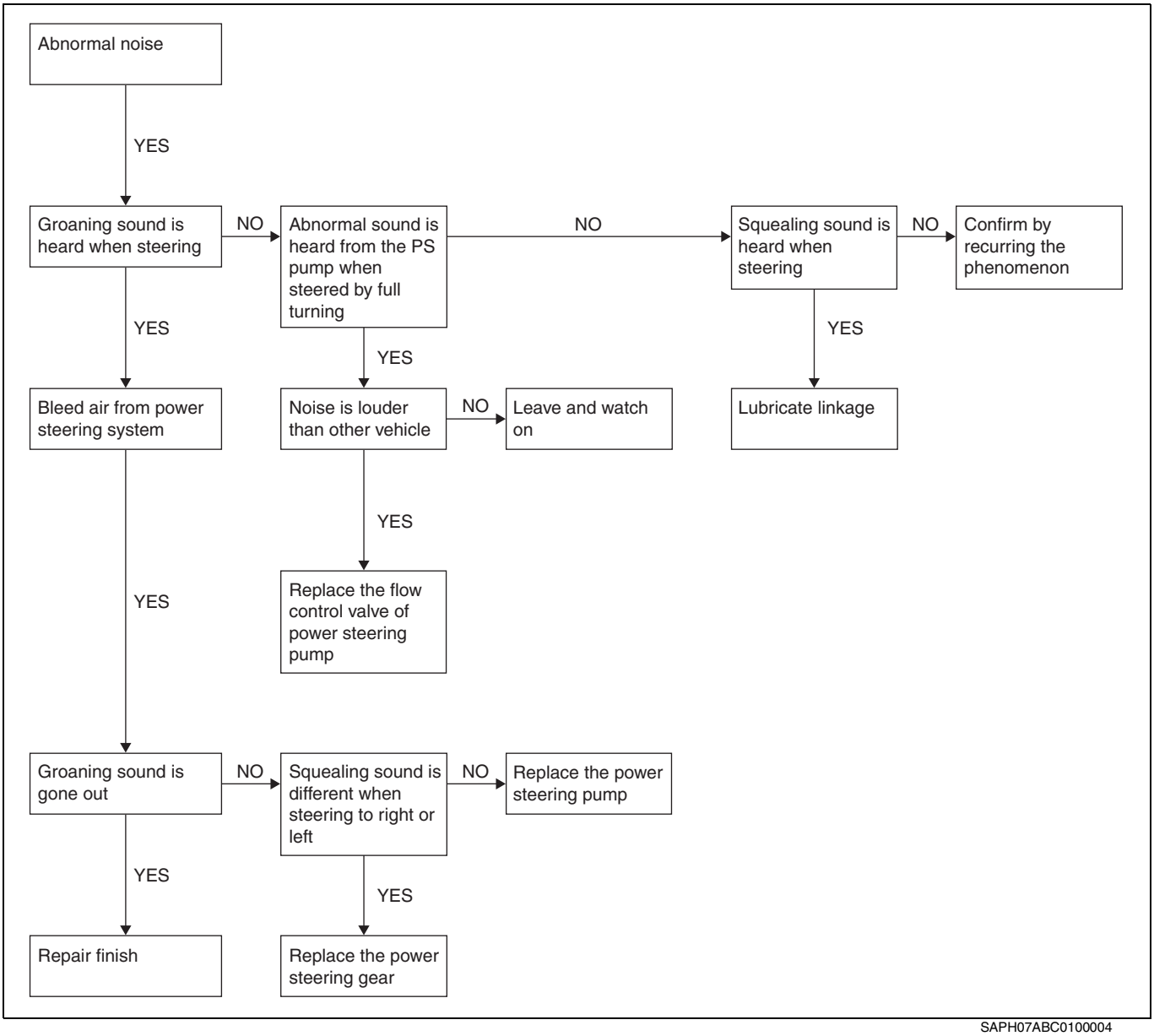


SAPH07ABC0100004

# STEERING UNIT

SR02-001

**STEERING LINKAGE ..... SR02-2**
DESCRIPTION ..... SR02-2
COMPONENT LOCATOR..... SR02-3
SPECIAL TOOL ..... SR02-4
OVERHAUL ..... SR02-5
INSPECTION AND REPAIR ..... SR02-10

# STEERING LINKAGE

## DESCRIPTION

EN07Z0802C100001

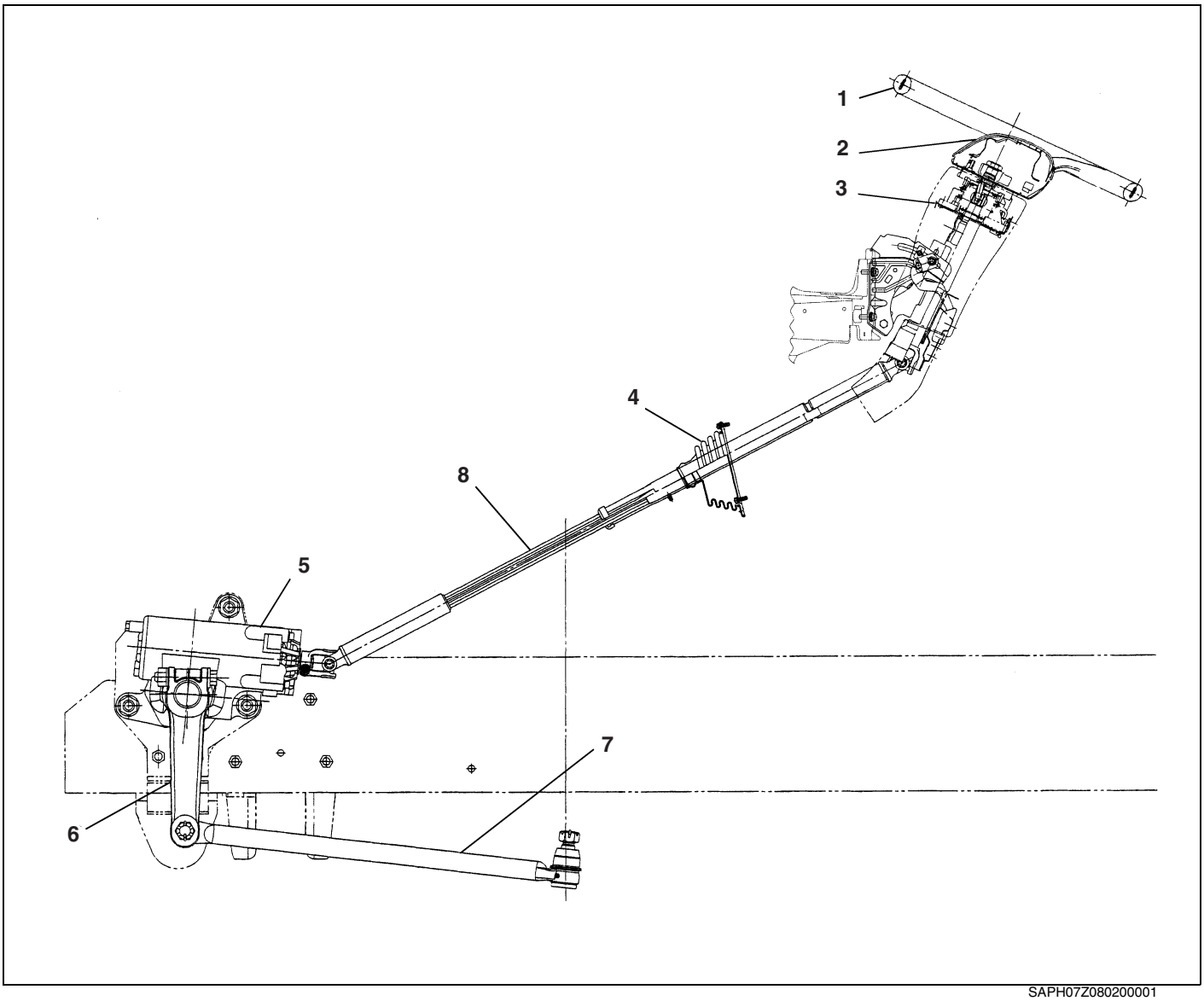


SAPH07Z080200001

| | | | |
|---|---|---|---|
| 1 | Steering wheel | 5 | Steering gear unit |
| 2 | Horn button | 6 | Pitman arm |
| 3 | Steering column assembly | 7 | Drag link |
| 4 | Dust cover | 8 | Steering shaft joint assembly |

# COMPONENT LOCATOR

EN07Z0802D100001

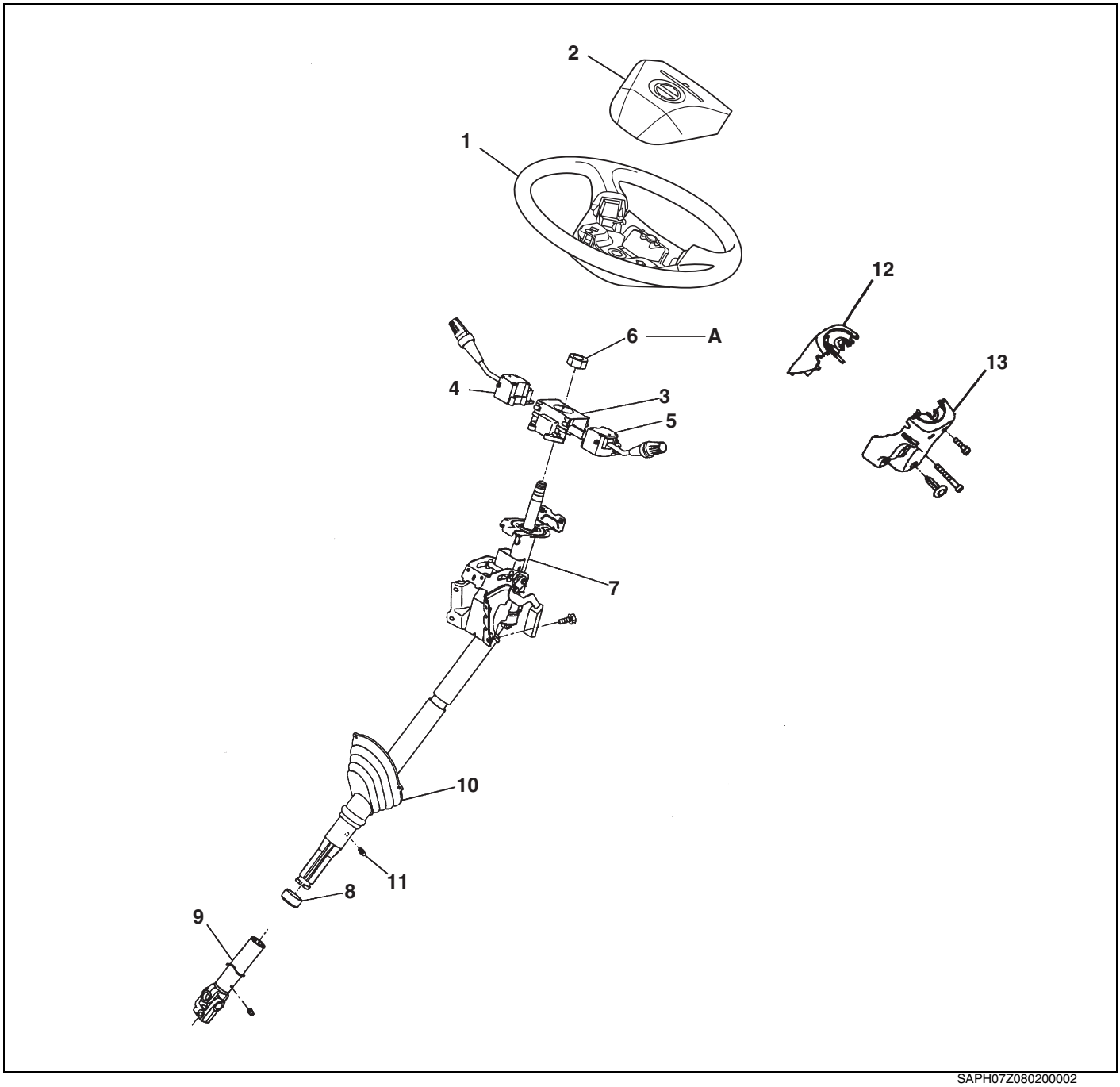


SAPH07Z080200002

| | | | |
|---|---|---|---|
| 1 | Steering wheel | 8 | Dust seal |
| 2 | Horn button | 9 | Steering shaft joint assembly |
| 3 | Combination switch body | 10 | Dust cover |
| 4 | Windshield wiper switch | 11 | Lubrication fitting |
| 5 | Light control switch | 12 | Column upper cover |
| 6 | Nut | 13 | Column lower cover |
| 7 | Steering column assembly | | |

**Tightening torque** **Unit: N·m {kgf·cm, lbf·ft}**

| | | | |
|---|---|---|---|
| A | 48.5-77.5 {500-800, 37-57} | | |

# SPECIAL TOOL

EN07Z0802K100001

Prior to starting a steering linkage overhaul, it is necessary to have these special tools.

| Illustration | Part number | Tool name | Remarks |
|---|---|---|---|
| 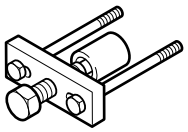 | S0965-01341 | STEERING WHEEL PULLER | |
| 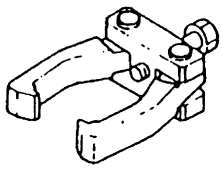 | S0965-01260 | PITMAN ARM PULLER | |

# OVERHAUL

EN07Z0802H200001

## IMPORTANT POINTS - DISASSEMBLY

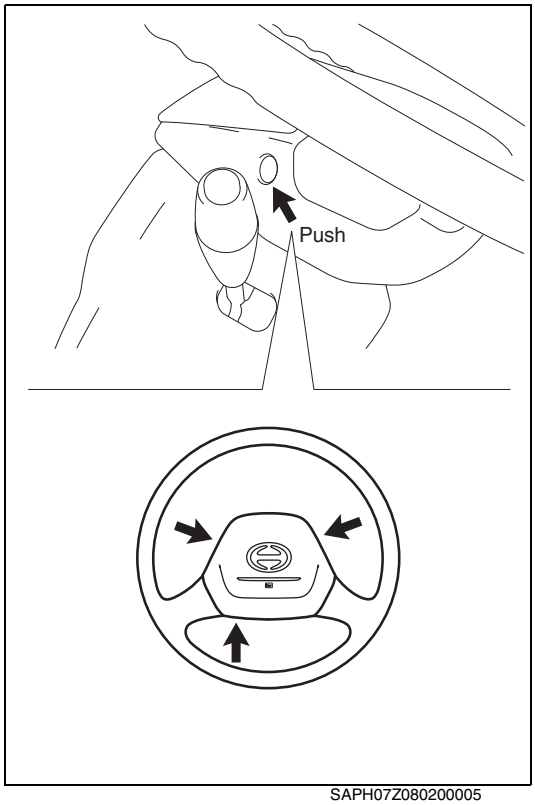


SAPH07Z080200005

**1. REMOVE THE STEERING WHEEL.**

(1) Push the 3 fixing claws in the holes of the horn button using torx wrench.

(2) Remove the horn button from the steering wheel.

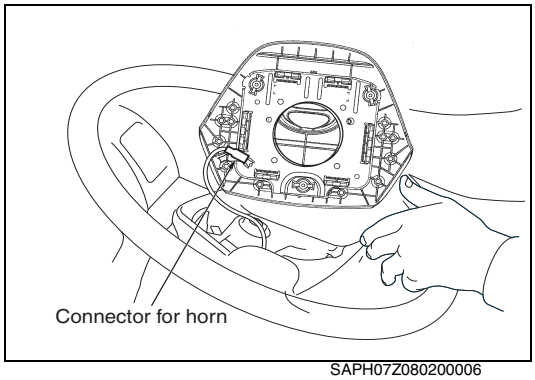


SAPH07Z080200006

(3) Remove the connector for the horn.

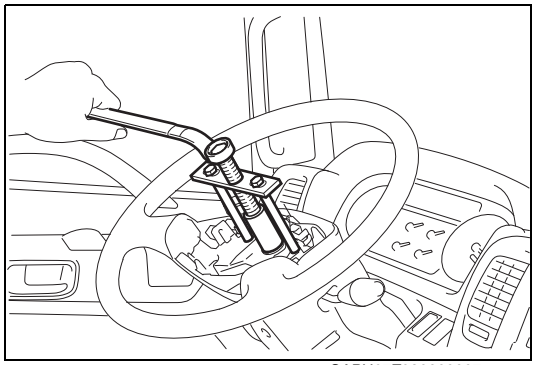

SAPH07Z080200007

(4) Remove the steering wheel lock nut.

(5) Use the special tool or commercial tool to remove the steering wheel as shown in the figure.
**SST: Steering Wheel Puller (S0965-01341)**

**NOTICE**

- **Before removing the steering wheel from the steering shaft, make aligning marks on both so that they can be assembled in the same position.**
- **Because the puller hole is made of aluminum and it is easily damaged, screw the puller bolt deeply.**

(6) Fix the rotating part of spiral cable with tape etc. to prevent the spiral cable from rotating.

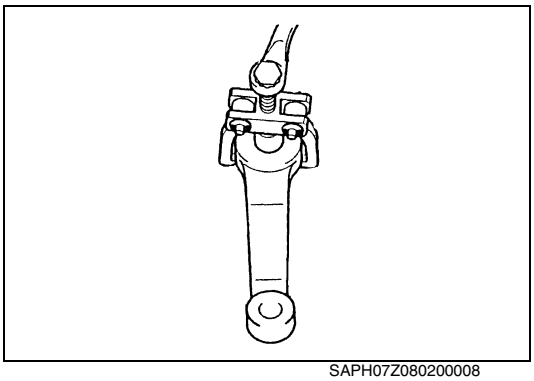

SAPH07Z080200008

**2. REMOVE THE PITMAN ARM.**

(1) Remove the nut and pinch bolt from the pitman arm.

(2) Using the special tool, remove the pitman arm from the sector shaft.
**SST: Pitman Arm Puller (S0965-01260)**

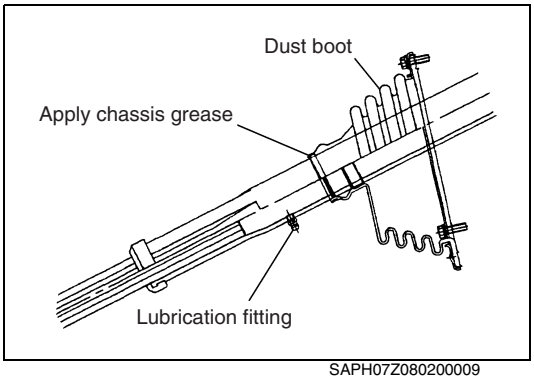


SAPH07Z080200009

## IMPORTANT POINTS - ASSEMBLY

**1. ASSEMBLE THE STEERING SHAFT.**

**2. INSTALL THE DUST BOOT.**

**3. ASSEMBLE THE STEERING SHAFT.**

(1) Before assembling, apply chassis grease to the spline of the sliding yoke, and after assembling also fill grease through lubrication fitting.

**When replacing parts: 115 g (4.0 oz)**
**When replenishing parts: 14 g (0.5 oz)**

**NOTICE**

**When assembling, take care not to damage the steering shaft spline. Apply chassis grease to the boundary of the dust boot and steering shaft.**

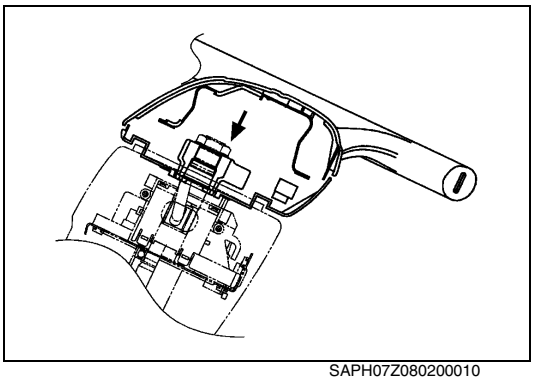

SAPH07Z080200010

**4. INSTALL THE STEERING WHEEL.**

(1) Set front axles toward rectilinear direction.

(2) Set the steering wheel straight to install it with nut.

**Tightening Torque:**
**48.5-77.5 N·m {500-800 kgf·cm, 37-57 lbf·ft}**

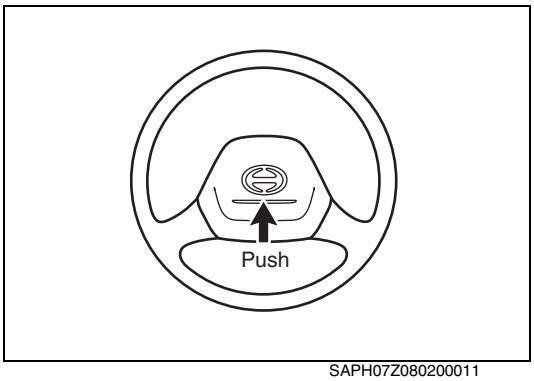


SAPH07Z080200011

(3) Push the horn button toward the steering wheel.

**5. IF NECESSARY, REPLACE THE DRAG LINK DUST SEAL.**

(1) Press or tap on the flanged foot portion of the seal to remove it from the socket assembly. If you use a screwdriver to loosen the seal, be careful not to damage the sealing face of the socket forging.

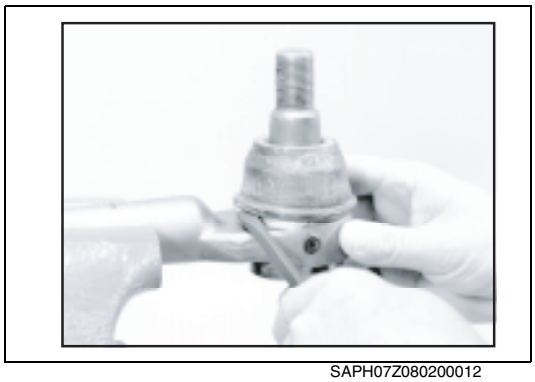

SAPH07Z080200012

(2) Wipe off all grease and foreign material from around the ball stud and socket throat. Do not use any type of cleanser to remove the grease.

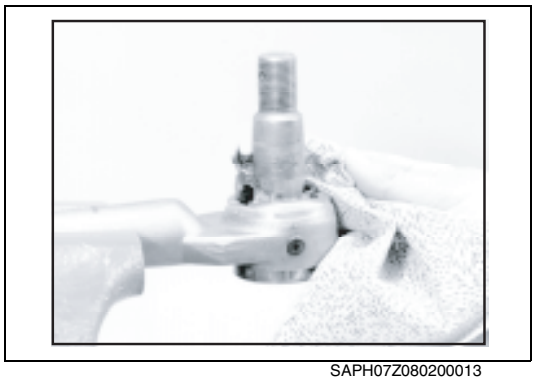

SAPH07Z080200013

(3) Using **#2 NLGI extreme pressure, lithium-based, moly-filled, heavy duty grease**, grease the socket throat and stud ball. Then fill the new boot seal 3/4 full with the same grease.

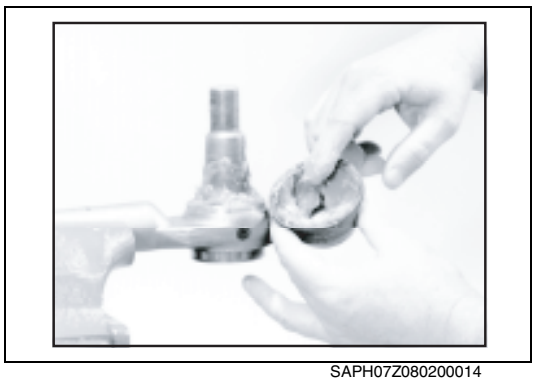

SAPH07Z080200014

(4) Position the socket assembly in a large vise, or on a press so that the ball stud is perpendicular to the socket stem.

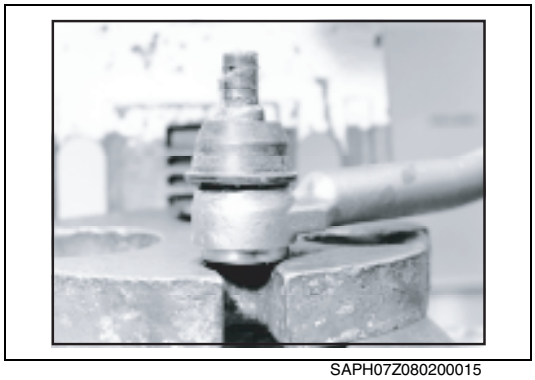

SAPH07Z080200015

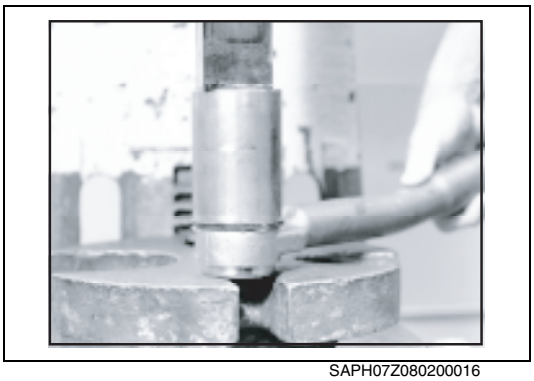

SAPH07Z080200016

(5) Press on the new boot seal using the tool described on below. The seal is in place when the flanged portion is seated on the machined section (sealing face) of the socket forging.

TOOL REQUIRED: A section of tubing with the inside diameter as close to the outside diameter of the boot seal (middle section) as possible.

The inside corner of the tube should be radiused (rounded) or chamfered (angled) so it will not cut the rubber during the press-on operation.

**⚠ CAUTION**
**DO NOT over-press the seal; over-pressing could cause it to deform and seal improperly. DO NOT use a screwdriver, chisel, punch, etc. on the flanged foot of the seal for installation.**

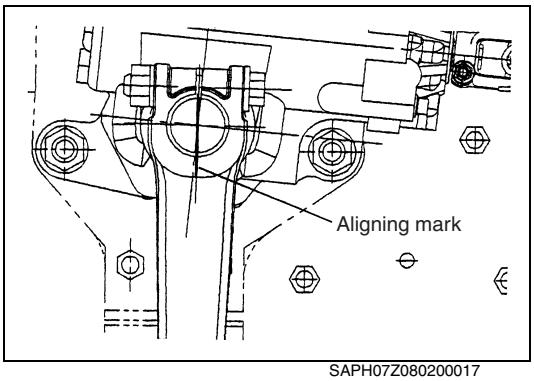


SAPH07Z080200017

**6. INSTALL THE PITMAN ARM.**
(1) Align the marks on the pitman arm and sector shaft.
(2) Spread open the split end of the arm. Push the arm.
(3) Install the pinch bolt and nut. Tighten the nut specified torque.
**Tightening Torque:**
**367-423 N·m {3,743-4,313 kgf·cm, 271-311 lbf·ft}**

**NOTICE**
**In case of reusing bolt or nut, apply oil to the nut contact surface and thread.**

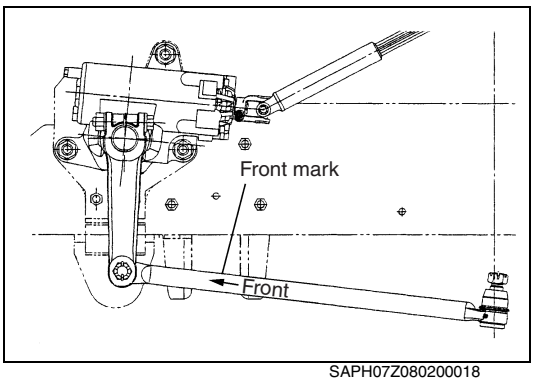


SAPH07Z080200018

**7. INSTALL THE DRAG LINK.**
(1) Connect the drag link with the pitman arm and with the knuckle arm.

**NOTICE**

- **At this time, make sure that the arrow "FRONT" or numeral on the drag link is positioned toward the front of vehicle.**
- **When handling the drag link, take care not to damage the dust seal.**

(2) Tighten the slotted nuts of the ball studs at both ends of the link to the specified torque, and then secure the nuts with the cotter pins.
**Tightening Torque:**
**136-170 N·m {1,388-1,735 kgf·cm, 100-125 lbf·ft}**

**NOTICE**
**When aligning the castle nut cut parts with the cotter pin fitting hole, make it by turning the nut to torque in the increasing direction. Don't turn in the decreasing direction.**

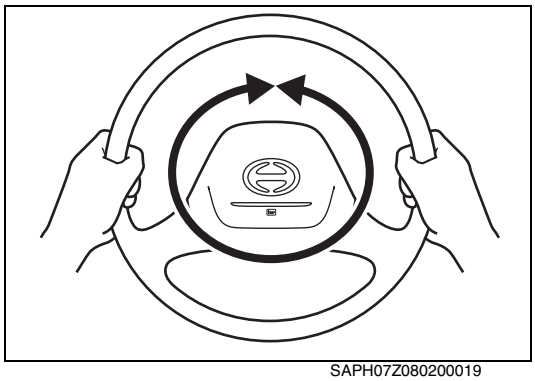
SAPH07Z080200019

**8. INSPECT THE STEERING SYSTEM FOR OPERATING ABILITY.**

(1) Place the front wheels on turn tables.

(2) Make sure that the steering wheel turns smoothly without any jolts or abnormal resistance when the steering wheel is turned full range.

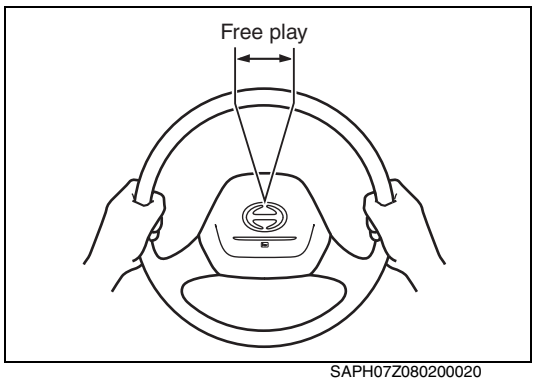

SAPH07Z080200020

(3) Check the steering wheel free play while engine is idling.
**Wheel Free Play: 0-35 mm {0-1.377 in.}**

(4) If wheel free play exceeds 0-35 mm {0-1.377 in.}, turn the set screw clockwise to decrease wheel free play and counterclockwise to increase it.

**⚠ WARNING**
**Excessive steering wheel free play may adversely affect vehicle handling. This can result in personal injury and/or property damage.**

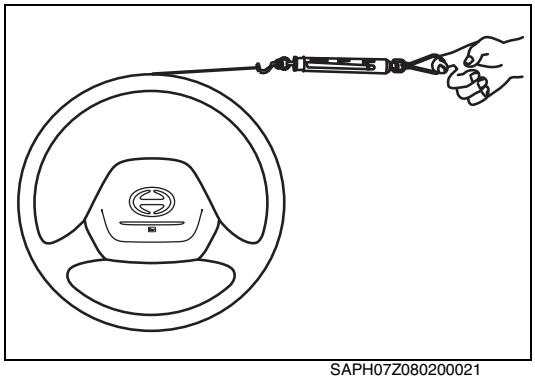
SAPH07Z080200021

(5) Measure the steering wheel turning force. Use a spring balancer to measure the steering wheel turning force.

**NOTICE**
**Measure the steering wheel turning force while the engine is idling.**

**Turning force:20 N {2.0 kgf, 4.4 lbf}**

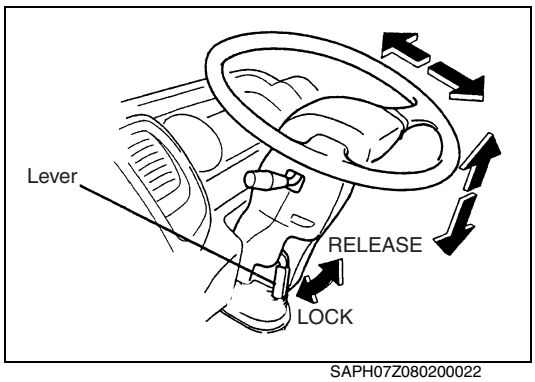

SAPH07Z080200022

(6) The steering wheel must be locked securely in any position up, down, forward and backward.

**⚠ WARNING**
**Before moving the vehicle, tighten the lever securely and try to move the steering wheel up and down, and forward and backward to make sure that it is locked securely. Never try to adjust the steering wheel position while the vehicle is moving. Any adjustment of the steering wheel while driving can cause the driver to lose control, and result in personal injury and/or property damage.**

(7) Check to see that the combination switch is operating properly.

# INSPECTION AND REPAIR

EN07Z0802H300001

**Unit: mm {in.}**

| Inspection item | Standard | Limit | Remedy | Inspection procedure |
|---|---|---|---|---|
| **Steering wheel: Cracks, distortion and damage** | **—** | **—** | **Replace, if necessary.** | **Visual check** 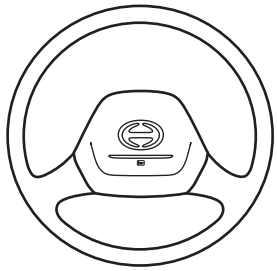 |
| **Steering wheel serration: Wear and damage** | **—** | **—** | **Replace, if necessary.** | **Visual check** 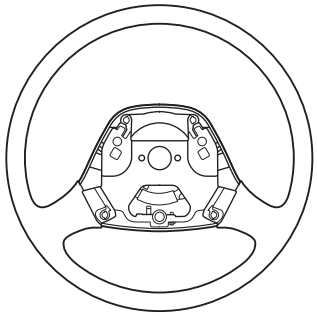 |
| **Steering column assembly: Bent, oscillation and cracks** | **—** | **—** | **Replace, if necessary** | **Visual check** 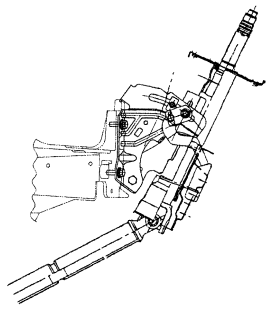 |
| **Drag link: Cracks and damage**<br>**Ball joint: Play**<br>**Dust seal: Damage** | **—** | **—** | **Replace the whole drag link assembly or replace only dust cover.** | **Visual check** 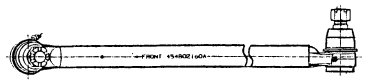 |
| **Pitman arm internal splines for:**<br>**• severe wear, corrosion and fretting**<br>**• twisted splines**<br>**• missing splines** | **—** | **—** | **Replace, if necessary** | **Visual check**  |

**⚠ WARNING**

**If twisted or missing splines are found, be sure to inspect all internal steering gear components carefully for signs of impact damage. Follow the procedure in the chapter power steering gear unit.**

# POWER STEERING

SR03-001

**POWER STEERING GEAR UNIT ..... SR03-2**

DATA AND SPECIFICATIONS ..... SR03-2
DESCRIPTION ..... SR03-3
OPERATION ..... SR03-4
COMPONENT LOCATOR..... SR03-6
TORQUE CHART ..... SR03-8
HAZARD WARNING DEFINITIONS ..... SR03-8
DISCLAIMER..... SR03-9
PATENTS ..... SR03-9
MAINTENANCE TIPS..... SR03-9
ON-VEHICLE SERVICE ..... SR03-11
RESEAL & REPAIR ..... SR03-21

**POWER STEERING PUMP..... SR03-55**

DATA AND SPECIFICATIONS ..... SR03-55
DESCRIPTION ..... SR03-55
OPERATION ..... SR03-56
COMPONENT LOCATOR..... SR03-57
OVERHAUL ..... SR03-59
INSPECTION AND REPAIR ..... SR03-64

# POWER STEERING GEAR UNIT

## DATA AND SPECIFICATIONS

EN07Z0803I200001

| | |
|---|---|
| **Vehicle model** | **HINO 238, 258, 268, 338, 358 (NE8J, NJ8J, NF8J, NV8J, NH8J)** |
| **Manufacture** | **TRW Automotive** |
| **Power steering gear unit model** | **TAS65** |
| **Type** | **Integral hydraulic power steering gears** |
| **Gear ratio** | **20.4** |

**NOTICE**

- **Poppet valve adjustment is needed when the following occurs.**
  **(1) Reducing the turning angle.**
  **(2) Reducing the toe in.**
- **Readjustment**
  **Refer to [Poppet Readjustment-Single Gears] part on page SR03-17 and the following parts are needed.**
  **Poppet adjusting screw and lock nut assembly.**
  **TRW CSS part number 021407X1**

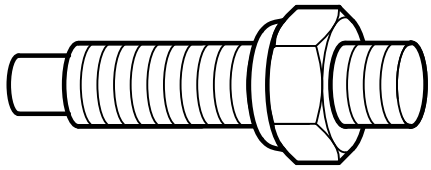

SAPH07Z080300001

# DESCRIPTION

EN07Z0803C100001

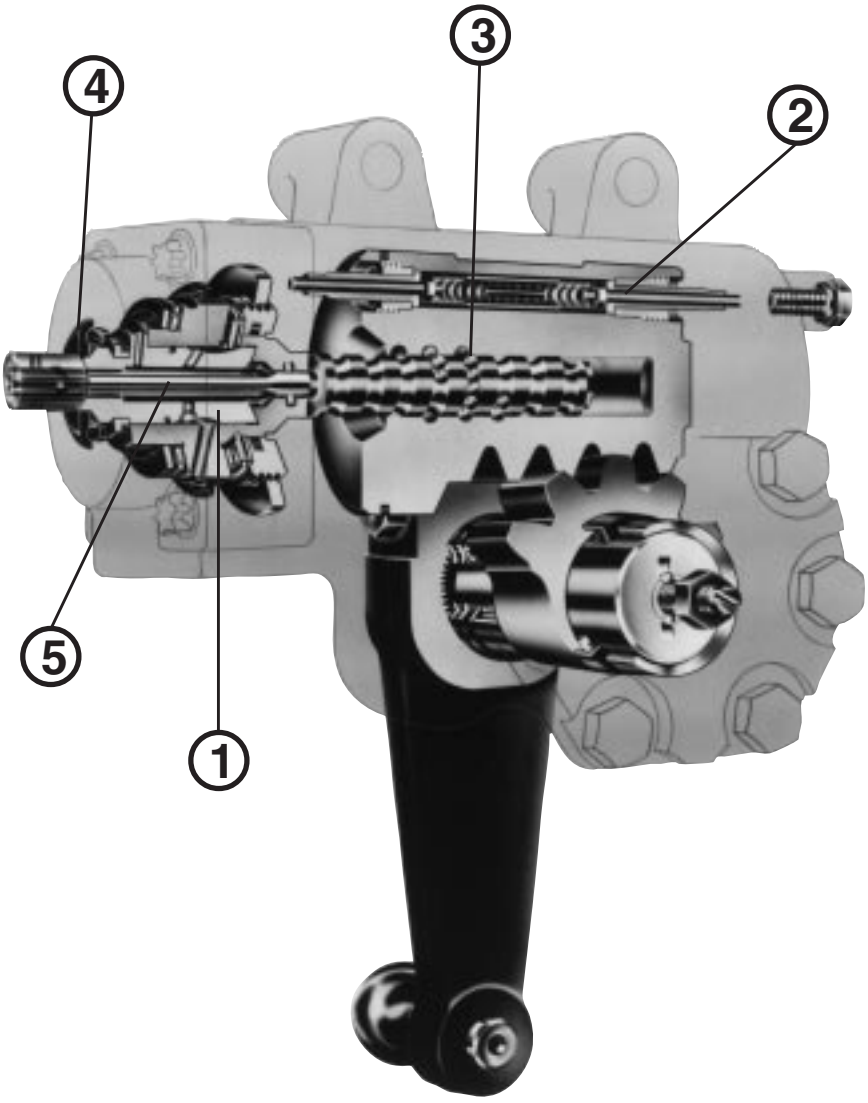


SAPH07Z080300002

| | | |
|---|---|---|
| 1 | Rotary Valve | This device provides responsive steering control. |
| 2 | Poppets (optional) | These unloading valves are automatically set to furnish power steering pump protection and reduce pressure to unload steering linkage at vehicle axle stop settings. |
| 3 | Recirculating Balls | Combine high mechanical efficiency with smooth operation. |
| 4 | Dirt & Water Seals | Lip-type seals on both input and output shafts. |
| 5 | Torsion Bar | Provides positive valve centering with definitive "feel of the road". |

# OPERATION

EN07Z0803C100002

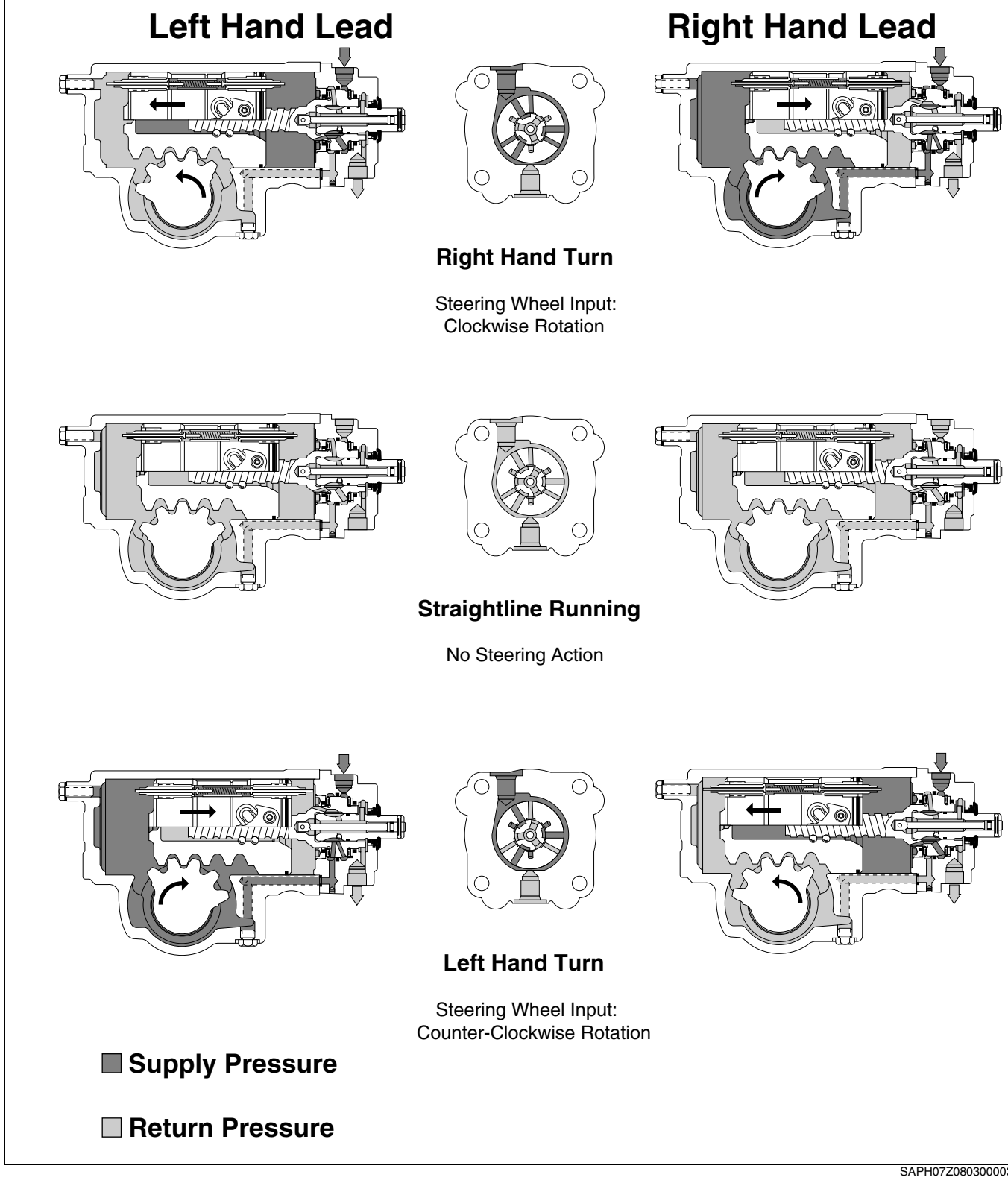


SAPH07Z080300003

## APPROVED HYDRAULIC FLUIDS

Automatic Transmission Fluid Dexron II
Automatic Transmission Fluid Type "E" or "F"
Chevron 10W-40
Chevron Custom 10W-40 Motor Oil
Chevron Torque 5 Fluid
Exxon Nuto H32 Hydraulic Fluid
Fleetrite PSF (Can #990625C2)
Ford Spec. M2C138CJ
Mack EO-K2 Engine Oil
Mobil ATF 210
Mobil Super 10W-40 Motor Oil
Premium Blue 2000-SAE 15W-40
*Shell Rotella T30W
*Shell Rotella T SAE 30
Texaco 10W-40
Texaco TL-1833 Power Steering Fluid
Union 10W-40
Union 15W-40
Unocal Guardol 15W-40 Motor Oil

The steering system should be kept filled with one of the above fluids. Fluids marked with an asterisk (*) have not been approved for use with TRW's pump.

⚠ **WARNING**
**Completely flush the steering system with one of the recommended fluids above only. Do not mix oil types. Any mixture or any unapproved oil could lead to seal deterioration and leaks. A leak could ultimately cause the loss of fluid, which could result in a loss of power steering assist.**

## SPECIFICATION NUMBERS

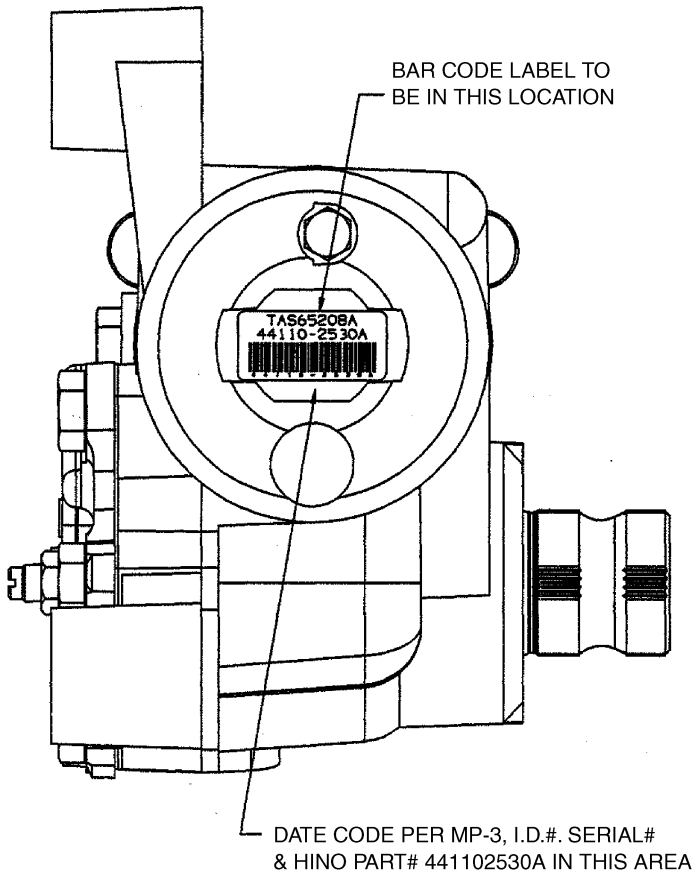


SAPH07Z080300004

# COMPONENT LOCATOR

EN07Z0803D100001

## TAS SERIES EXPLODED VIEW

### 1. STEP BORE

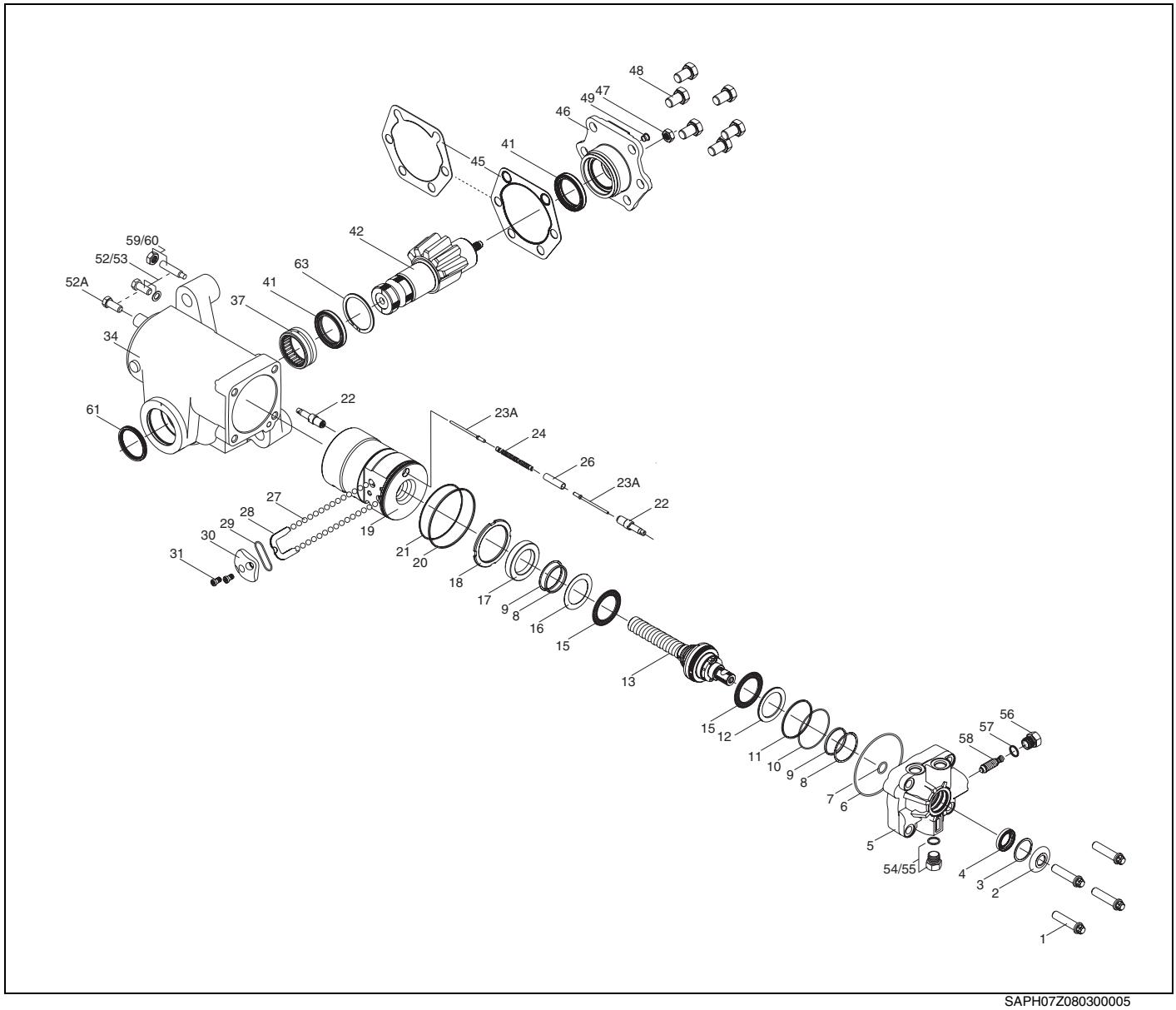


SAPH07Z080300005

| | |
|---|---|
| 1 | Bolts (4-Valve Housing) |
| *2 | Dirt and Water Seal |
| *3 | Retaining Ring |
| *4 | Seal (Input Shaft) |
| 5 | Valve Housing |
| *6 | Seal Ring (Valve Housing) |
| *7 | Seal Ring (Valve Housing) |
| *8 | Seal Ring (2) |
| *9 | O-ring (2) |
| *10 | Seal Ring |
| *11 | O-ring (Valve Housing) |
| 12 | Thrust Washer (Thick) |
| 13 | Input Shaft, Valve, Worm Assy. |
| 15 | Thrust Bearing (1 or 2) |
| 16 | Thrust Washer (Thin) |
| 17 | Bearing Adjuster |
| *18 | Adjuster Locknut |
| 19 | Rack Piston |
| *20 | Teflon Seal Ring |
| *21 | O-ring (Back-up; Rack Piston) |
| 22 | Poppet Seat and Sleeve Assy. (2) |
| 23 | Poppet (2) |
| 24 | Poppet Spring |
| 26 | Push Tube |
| 27 | Balls |
| 28 | Ball Return Guide Halves (2) |
| *29 | Seal (Cap) |
| 30 | Ball Return Guide Cap |
| *31 | Torx Screws (2-Cap/Strap) |
| 34 | Housing |
| 35 | Grease Fitting |
| 37 | Roller Bearing |
| *41 | Seal (2-Output) |
| 42 | Sector Shaft |
| 43 | Adjusting Screw (Sector Shaft) |
| 44 | Retainer (Adjusting Screw) |
| *45 | Gasket (Side Cover) |
| 46 | Side Cover Assembly |
| 47 | Jam Nut |
| 48 | Special Bolts (6 or 8-Side Cover) |
| *49 | Vent Plug (Side Cover) |
| 50 | Bleed Screw (Manual) |
| 51 | Plug (Auto Bleed) |
| 52 | Fixed Stop Screw (Poppet) |
| 52A | Fixed Stop Screw (Poppet-Alt) |
| 53 | Washer (Stop Screw) |
| 54 | Auxiliary Port Plug (2) |
| *55 | O-ring (2-Aux. Port Plug) |
| 56 | Relief Valve Cap |
| *57 | O-ring (Relief Valve) |
| 58 | Relief Valve (2 piece) |
| 59 | Service Poppet Adjusting Screw |
| 60 | Service Sealing Jam Nut |
| *61 | Dirt & Water Seal (Trunnion) |
| 63 | Retaining Ring |

# TORQUE CHART

EN07Z0803A200001

| Part Name | Item # | Torque Range Dry | Torque Range Lubricated |
|---|---|---|---|
| Auxiliary cylinder plug | 54 | 25-35 lbf·ft (34-48 N·m) | |
| Ball return guide cap/strap bolts | 31 | 31 14-22 lbf·ft (19-29 N·m) | |
| Bearing adjuster | 17 | | 11-15 lbf·ft (15-20 N·m)* |
| Locknut | 18 | | 101-122 lbf·ft (137-165 N·m)** |
| Manual bleed screw | 50 | 40-50 lbf·in. (3.1-3.7 N·m) | |
| Plug, auto bleed | 51 | 38-58 lbf·ft (52-79 N·m) | |
| Poppet sleeve assembly | 22 | 16-20 lbf·ft (22-27 N·m) | |
| Poppet sealing nut, service | 60 | 33-37 lbf·ft (45-50 N·m) | |
| Poppet fixed stop screw | 52 | 38-42 lbf·ft (52-57 N·m) | |
| Poppet fixed stop screw | 52A | 38-58 lbf·ft (52-79 N·m) | |
| Relief valve cap | 56 | 25-35 lbf·ft (34-48 N·m) | |
| Sector shaft adjusting screw jam nut | 47 | 40-45 lbf·ft (54-61 N·m) | |
| Side cover bolts (TAS40) | 48 | | 108-128 lbf·ft (147-174 N·m) |
| Side cover bolts (TAS55, 65, 85) | 48 | | 160-180 lbf·ft (217-244 N·m) |
| Valve housing bolts (TAS40, 55, 65) | 1 | | 75-85 lbf·ft (102-115 N·m) |
| Valve housing bolts (TAS85) | 1 | | 108-128 lbf·ft (147-174 N·m) |

* After tightening to this torque value, the adjuster must be backed off $^1/_4$ to $^1/_2$ of a turn as described in step (24) on page SR03-49.

**Torque value indicated is using recommended tools.

Special tools can be purchased through:
SPX Corporation
Kent-Moore Tool Group
28635 Mound Road
Warren, MI 48092
1-800-328-6657

# HAZARD WARNING DEFINITIONS

EN07Z0803A100001

**⚠ WARNING**
**A warning describes hazards or unsafe practices which could result in severe personal injury or death.**

**⚠ CAUTION**
**A caution describes hazards or unsafe practices which could result in personal injury or product or property damage.**

**NOTICE**
**A note gives key information to make following a procedure easier or quicker.**

# DISCLAIMER

EN07Z0803A200002

This Service Manual has been prepared by TRW Commercial Steering Division for reference and use by mechanics who have been trained to repair and service steering components and systems on heavy commercial vehicles. TRW Commercial Steering Division has exercised reasonable care and diligence to present accurate, clear and complete information and instructions regarding the TRW Commercial Steering TAS Series Integral Power Steering Gears. Since this is a general Service Manual, the photographs and illustrations may not look exactly like the steering gear being serviced. The procedures, therefore, must be carefully read and understood before servicing.

If inspection or testing reveals evidence of abnormal wear or damage to the TAS steering gear or if you encounter circumstances not covered in the Manual, **Stop-Consult the vehicle manufacturer's Service Manual and warranty. Do not try to repair or service a TAS steering gear which has been damaged or includes any part that shows excessive wear unless the damaged and worn parts are replaced with original TRW replacement and service parts and the unit is restored to TRW's specifications for the TAS steering gear.**

It is the responsibility of the mechanic performing the maintenance, repairs or service on a particular TAS steering gear to (a) inspect the steering gear for abnormal wear and damage, (b) choose a repair procedure which will not endanger his/her safety, the safety of others, the vehicle, or the safe operation of the vehicle, and (c) fully inspect and test the TAS steering gear and the vehicle steering system to ensure that the repair or service of the steering gear has been properly performed and that the steering gear and system will function properly.

# PATENTS

EN07Z0803A200003

TRW Commercial Steering Division TAS power steering gears are covered by several United States and foreign patents, either issued or pending.

TRW Inc., 1998

# MAINTENANCE TIPS

EN07Z0803A200004

**Never high-pressure wash or steam clean a power steering gear while on or off the vehicle. Doing so could force contaminants inside the gear and cause it to malfunction.**

Make sure vehicle wheel cut or clearances meet manufacturer's specifications, and make sure pitman arm timing marks are aligned properly to **prevent internal bottoming** of the steering gear.

**Regularly check the fluid** and the fluid level in the power steering reservoir.

**Keep tires inflated** to correct pressure.

**Never use a torch to remove pitman arm.**

Investigate and immediately **correct the cause of any play, rattle, or shimmy** in any part of the steering system.

**Make sure the steering column is aligned properly.**

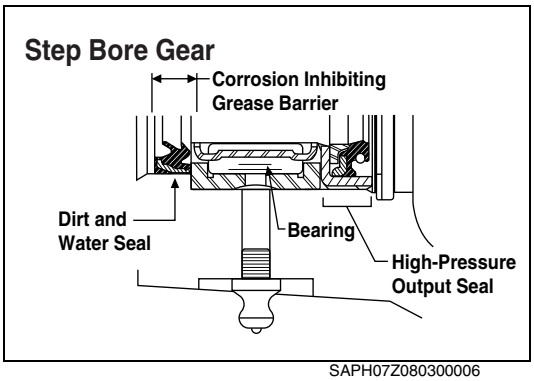


SAPH07Z080300006

**Encourage drivers to report any malfunctions or accidents** that could have damaged steering components.

**Do not attempt to weld any broken steering component.**
Replace the component with original equipment only.

**Do not cold straighten, hot straighten, or bend any steering system component.**

Always **clean off around the reservoir filler cap** before you remove it. Prevent dirt or other foreign matter from entering the hydraulic system.

**Investigate and correct any external leaks,** no matter how minor.

**Replace reservoir filters** according to requirements.

If you feel the vehicle is developing excessively **high hydraulic fluid temperatures,** consult with your vehicle manufacturer for recommendations.

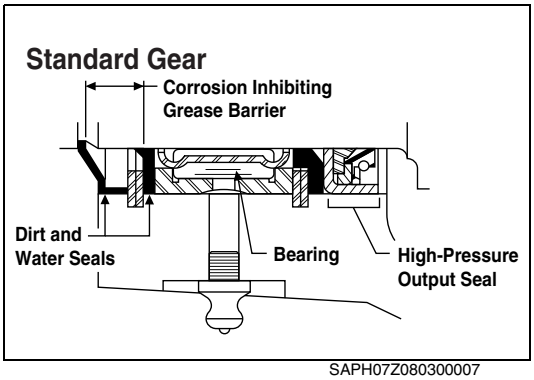


SAPH07Z080300007

**Maintain grease pack** behind the output shaft dirt and water seal as a general maintenance procedure at least twice a year, in the Spring and Fall. Grease fitting is provided in housing trunnion. Use only NLGI grade 2 multipurpose chassis lube, and use only a hand operated grease gun on fitting. Add grease until it begins to extrude past the sector shaft dirt and water seal.

# ON-VEHICLE SERVICE

EN07Z0803C100003

## 1. FILLING AND AIR BLEEDING THE SYSTEM

**⚠ CAUTION**
**Make sure poppets are set correctly before beginning this procedure.**

(1) Fill the reservoir nearly full. Do not steer. Start and run the engine for 10 seconds, then shut it off. Check and refill the reservoir. Repeat at least three times, checking the reservoir each time.

**⚠ CAUTION**
**Do not allow the fluid level to drop significantly or run out of the reservoir. This may induce air into the system.**

(2) Start the engine and let it idle for 2 minutes. Do not steer. Shut off the engine and check the fluid level in the reservoir. Refill as required.
(3) Start the engine again. Steer the vehicle from full left to full right several times. Add fluid, as necessary, to the full line on the dip stick.

Automatic bleed systems should now be free from trapped air.

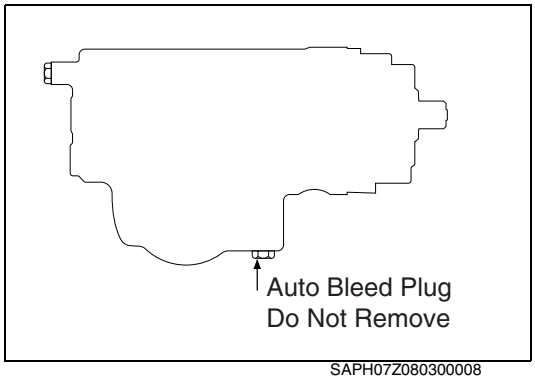

SAPH07Z080300008

## 2. INPUT SHAFT SEAL REPLACEMENT

This procedure uses the vehicle's power steering pump to force out the input shaft seal. To use this procedure, the power steering pump should have a minimum of 1,500 psi available.
(1) Disconnect return line from the steering gear and plug the line. Also cap the return port of the gear with a high pressure fitting.

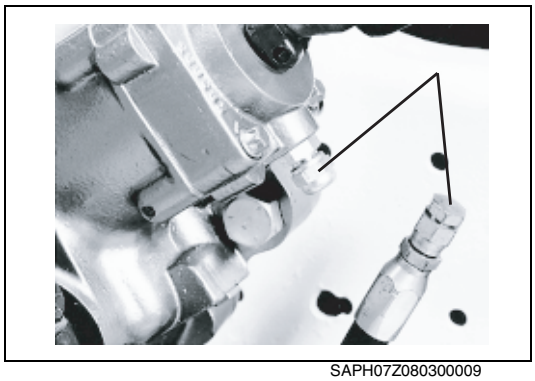
SAPH07Z080300009

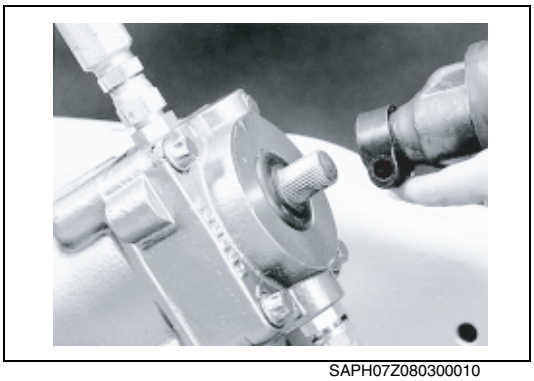
SAPH07Z080300010

(2) Remove the steering column from the gear input shaft.

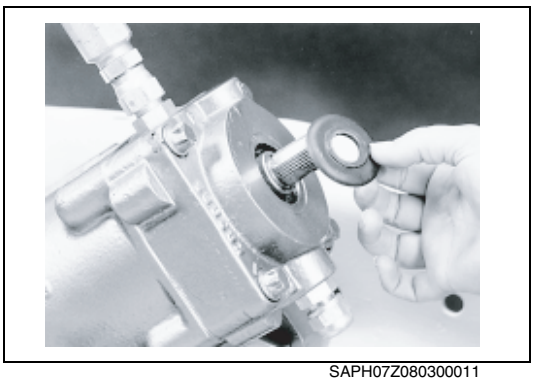
SAPH07Z080300011

(3) Remove the dirt and water seal from the steering gear. Save this seal to match the new seal to the correct size.

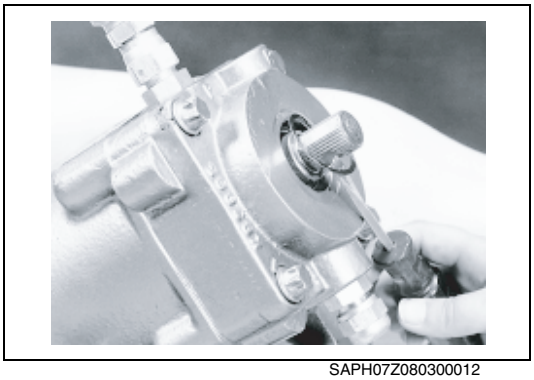
SAPH07Z080300012

(4) Wipe out the grease and then remove the spiral retaining ring. Use a screwdriver inserted into the notch formed in the end of the ring. Be careful not to scratch the bore with the screwdriver.

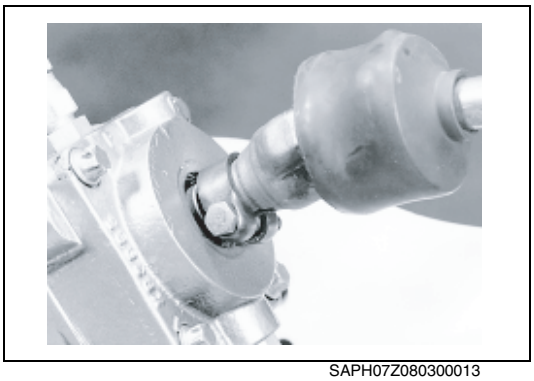
SAPH07Z080300013

(5) Slip the steering column back onto the input shaft with the pinch bolt installed, but not tightened.

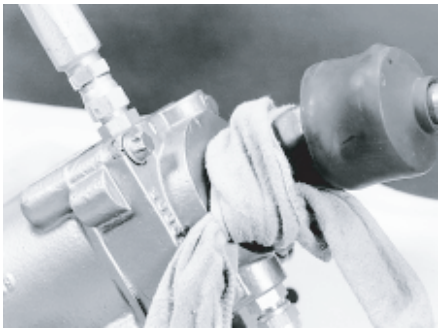
SAPH07Z080300014

(6) Tie or wrap a shop towel around the input shaft area and place a drip pan under the vehicle to catch the oil.

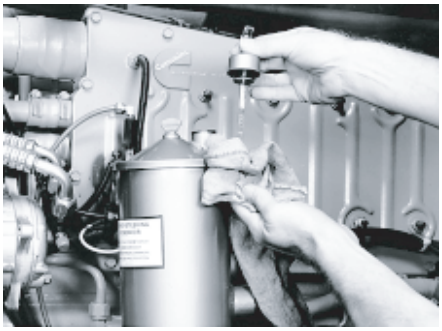
SAPH07Z080300015

(7) Add fluid as necessary, to the full line on the dip-stick. Do not mix fluid types.

**⚠ WARNING**
**Any mixture of fluid types, or use of any unapproved fluid could lead to seal deterioration and leaks. A leak could ultimately cause the loss of fluid, which could result in a loss of power steering assist.**

(8) With the vehicle in neutral, momentarily turn the starter (quickly turn off the engine if it starts).
(9) Remove the shop towel. Disconnect the steering column, and remove the input shaft seal.

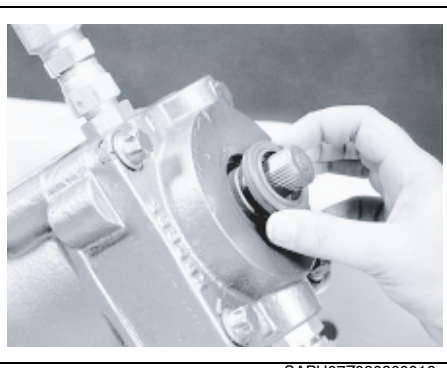
SAPH07Z080300016

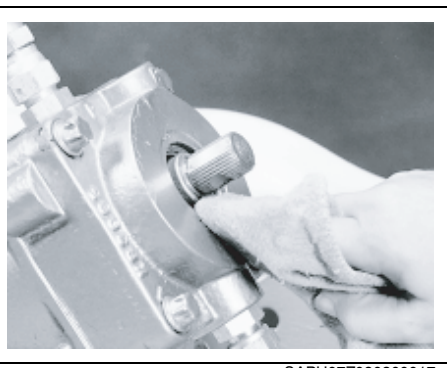
SAPH07Z080300017

(10) Check the seal area of the valve housing for any seal fragments. Remove any that are found.

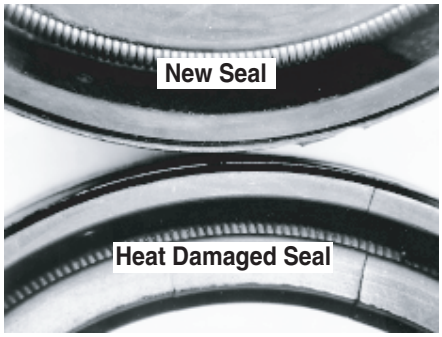

SAPH07Z080300018

(11) Check the seal for heat damage. If the seal is stiff and brittle, and not pliable like the new seal, it is probably heat damaged. Determine and fix the cause of excessive heat in the vehicle.

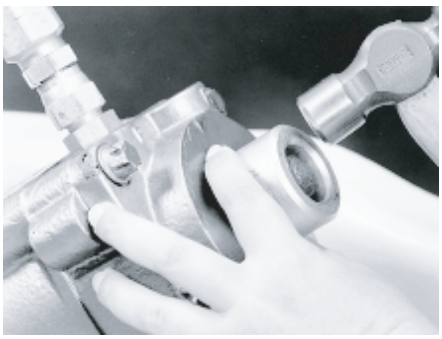
SAPH07Z080300019

(12) Put clean grease 406038 on the inside dia. of the new input shaft seal, and place it over the input shaft. With the small dia. of tool J37073 against the seal, tap the tool until the tool shoulder is square against the valve housing. Remove any seal material that may have sheared off in the seal bore or retaining ring groove.

**⚠ CAUTION**
**Do not use a socket to install this seal because you will not be able to control seal installation depth, possibly causing a leak.**

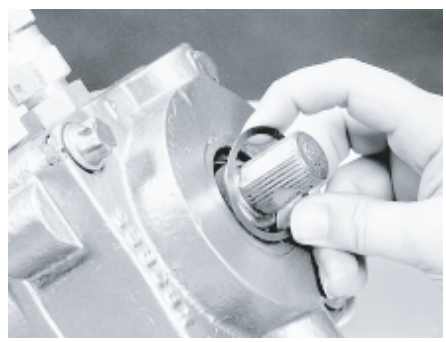
SAPH07Z080300020

(13) Insert new retaining ring into the groove.

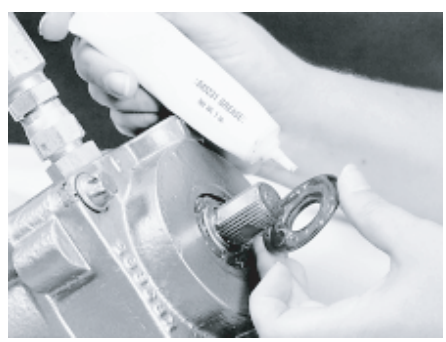
SAPH07Z080300021

(14) Pack the end of the valve housing bore around the input shaft with grease 406038. Choose the correct size dirt & water seal by comparing the choices to the old seal, or by measuring the major diameter of the input shaft serrations (see chart below). Apply more grease 406038 to the new dirt & water seal and install it over the input shaft. Seat it in the groove behind the serrations and against the valve housing.

| Seal Part No. | Serration Size | Major Serration Dia. |
|---|---|---|
| 478044 | 13/16" x 36 | 0.807 / 0.799 |
| 478060 | 7/8 x 36 | 0.866 / 0.857 |
| 478050 | 1" x 36 | 0.987 / 0.977 |
| 478050 | 1" x 79 | 1.008 / 1.000 |

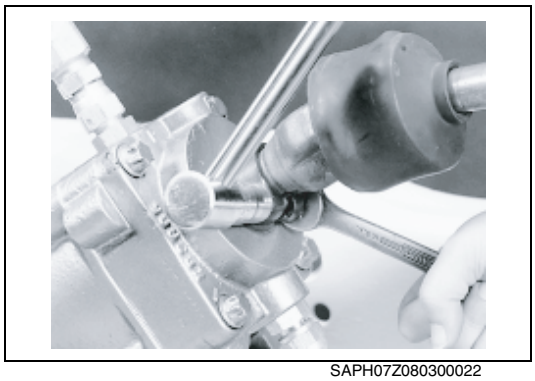
SAPH07Z080300022

(15) Reconnect the steering column to the input shaft and tighten the pinch bolt to torque level specified.

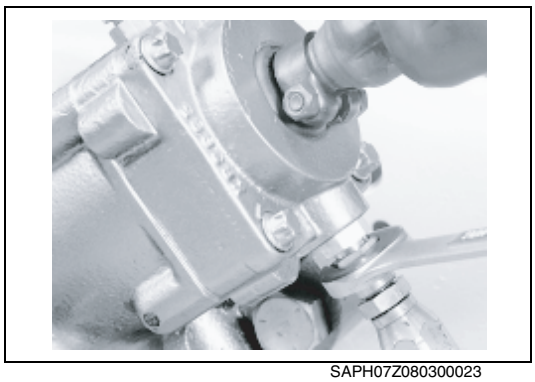
SAPH07Z080300023

(16) Reconnect the return line to the steering gear return port.

(17) Air bleed the system using the procedure on page SR03-11.

**3. SECTOR SHAFT ADJUSTMENT**

This adjustment can only be completed on the vehicle if the adjusting screw jam nut is accessible. This nut is located on the side cover.

Photos in this section were taken on a mock frame rail for clarity.

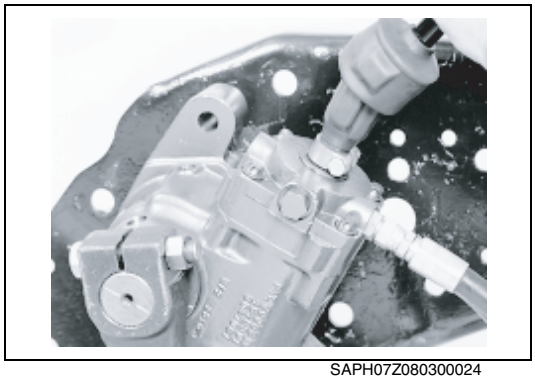
SAPH07Z080300024

(1) With the engine on, rotate the steering wheel (input shaft) until the timing mark on the sector shaft lines up with the mark on the housing. The line on the sector shaft should be at a 90° angle from the input shaft. The sector shaft is now on its "center of travel". Turn the vehicle off.

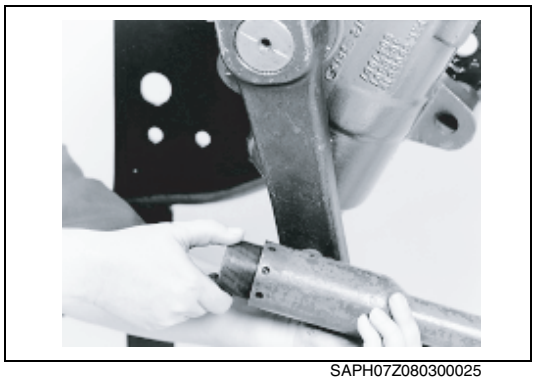
SAPH07Z080300025

(2) Remove the drag link from the pitman arm.

**⚠ CAUTION**

**To avoid resetting the poppets, do not rotate the input shaft more than $1^1/_2$ turns from the "center of travel" position while the drag link is disconnected.**

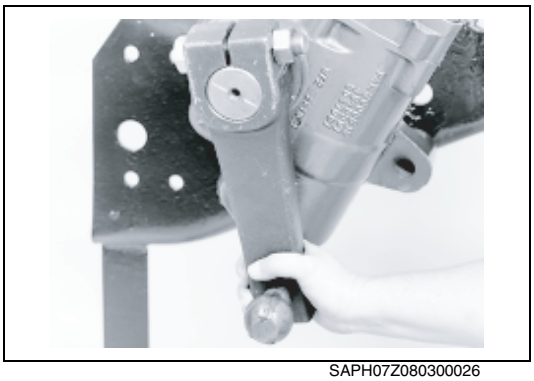
SAPH07Z080300026

(3) From the "center of travel" position, grasp the pitman arm and gently try to rotate it back and forth. If looseness or lash is felt at this point, the sector shaft is out of adjustment.

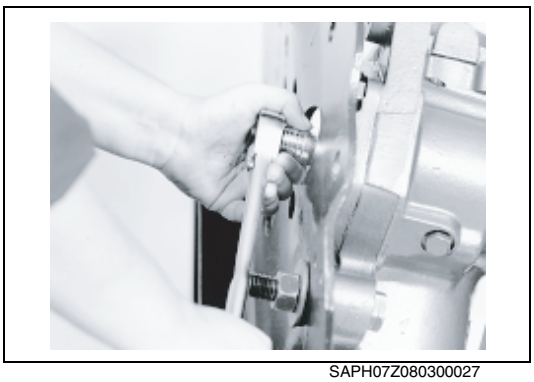
SAPH07Z080300027

(4) Loosen the jam nut.

**NOTICE**

**If the gear is removed from the vehicle to adjust the lash:**

- **Leave the pitman arm connected to the gear.**
- **Best option is to follow the Final Adjustment procedure on page SR03-53.**
- **Alternate option is to continue with step (5) of this procedure.**

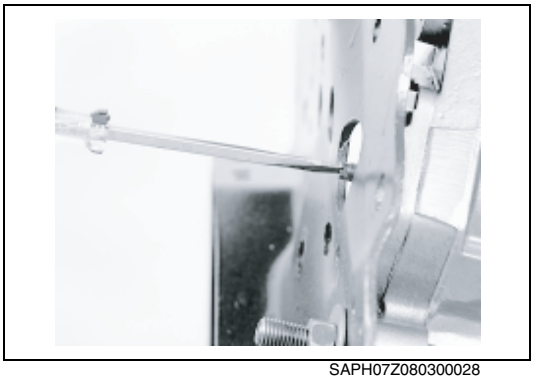
SAPH07Z080300028

(5) If no lash was detected in step (3), turn the shaft adjusting screw counterclockwise until you feel lash at the output shaft.

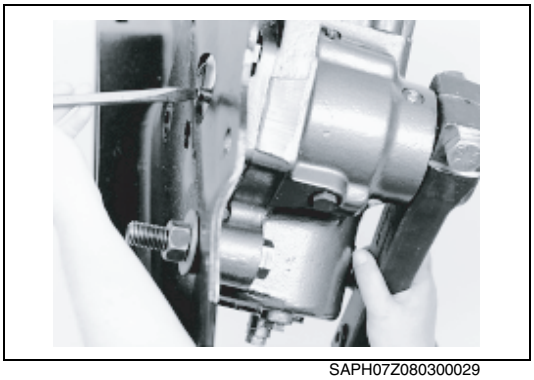
SAPH07Z080300029

(6) Slowly turn the shaft adjusting screw clockwise until you feel no lash at the output shaft without using more than 10 lbf·ft (14 N·m) of torque. From this position, turn the screw clockwise $^{1}/_{8}$ to $^{3}/_{16}$ of a turn more. Hold the adjusting screw in place, and tighten the jam nut. **Final jam nut torque 43 lbf·ft** (58 N·m).

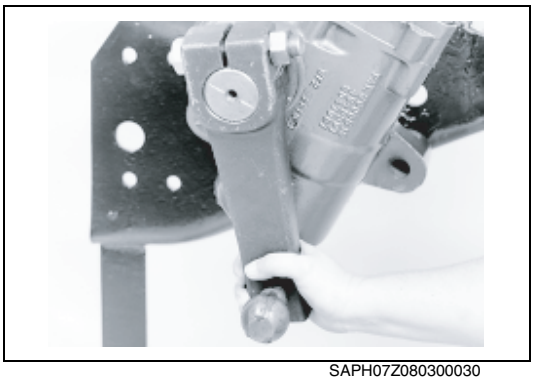
SAPH07Z080300030

(7) Turn the steering wheel $^1/_4$ turn each side of center, then back to center and recheck the pitman arm for lash. You should feel no lash; if there is lash, repeat steps (4), (6) and (7).

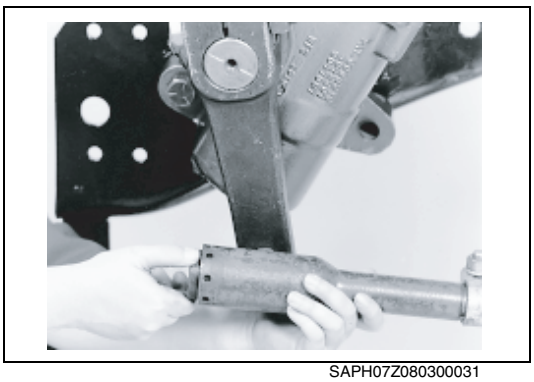
SAPH07Z080300031

(8) Reconnect the drag link to the pitman arm according to manufacturer's specifications.

**⚠ CAUTION**
**Maintain grease in the sector shaft bearing through the grease fitting in the housing using only a hand operated grease gun. Add grease until it begins to extrude past the dirt and water seal. Do not use a power grease gun because it will supply grease too fast; this could adversely affect the high pressure seal and contaminate the hydraulic fluid.**

**4. POPPET READJUSTMENT-SINGLE GEARS**

This resetting procedure will work in most cases with at least $1^3/_4$ hand-wheel-turns from each side of center. If you're making a large reduction in wheelnut and this procedure does not work, you may have to replace or internally reset the poppets using the procedure described in the Poppet Component section of this Service Manual.


SAPH07Z080300032

(1) Set the axle stops to vehicle manufacturer's wheelnut or clearance specifications.

Start the engine and allow the vehicle to idle for 5-10 minutes to warm the hydraulic fluid. Shut off the engine.

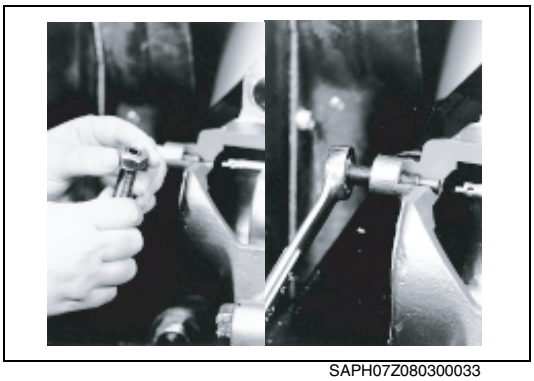
SAPH07Z080300033

(2) If a new poppet adjusting screw and nut are being used, turn the screw into the non-sealing end of the jam nut until the drive end of screw is flush with the nut.

Your steering gear will have either a fixed stop bolt or an adjusting screw. If the adjusting screw is already part of the steering gear, back the nut off of the adjusting screw until it is flush with the end of the adjusting screw.

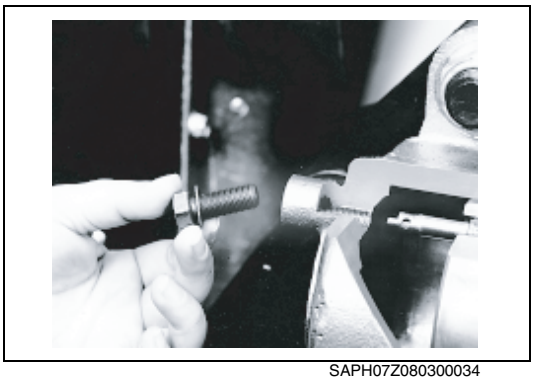
SAPH07Z080300034

(3) Make sure the engine is off and the road wheels are in straight ahead position. Remove and discard the poppet fixed stop bolt (if equipped) and washer (if equipped) from the lower end of the housing.

If the unit has a poppet adjusting screw and sealing nut that need to be replaced, remove and discard them.

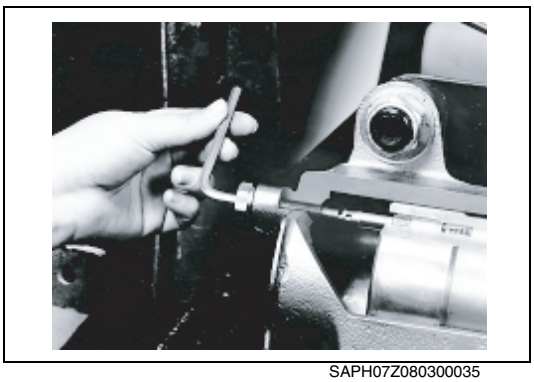
SAPH07Z080300035

(4) Turn the adjusting screw and sealing nut assembly, without rotating the nut on the screw, into the housing until the nut is firmly against the housing using a $^{7}/_{32}$" Allen wrench. Tighten the sealing nut against the housing.

**⚠ CAUTION**
**If the drive end of the screw is below the face of the nut, the poppet seat flange will break during step (7)d.**

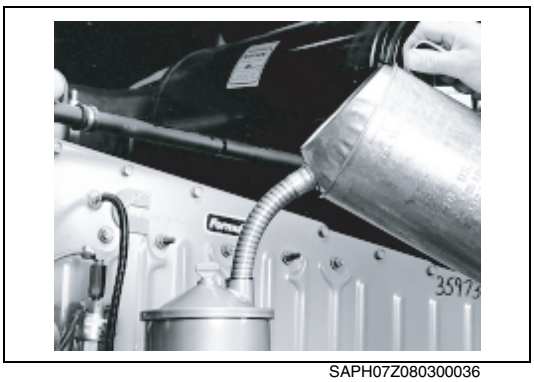
SAPH07Z080300036

(5) Refill the system reservoir with approved hydraulic fluid.

**⚠ CAUTION**
**Do not mix fluid types. Mixing of transmission fluid, motor oil, or other hydraulic fluids will cause seals to deteriorate faster.**

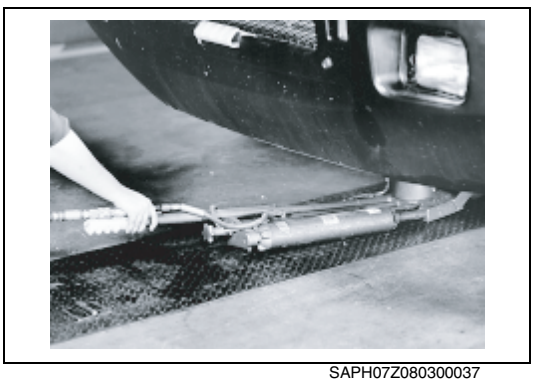
SAPH07Z080300037

(6) Place a jack under the center of the front axle and jack up the front end of the vehicle so the steer axle tires are off the ground.

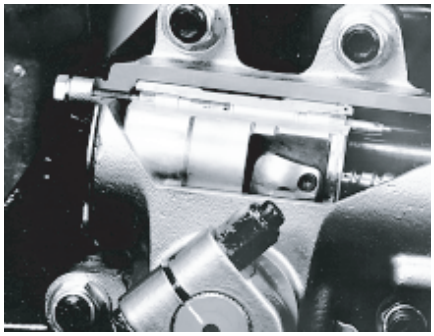
SAPH07Z080300038

(7) Push upper poppet out to prepare it for setting

a. Start the engine and let it run at idle speed.
b. Note which output shaft timing mark is nearest the housing piston bore.
c. Turn the steering wheel in the direction that makes this timing mark move toward the adjusting screw just installed. Turn in this direction until axle stop contact is made.
d. Pull hard on the steering wheel (put up to 40 lb rim pull on a 20" dia. steering wheel) after the axle stop is contacted.

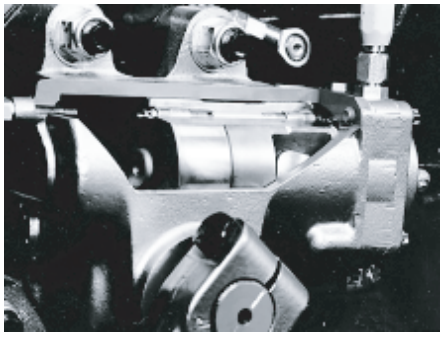
SAPH07Z080300039

(8) Set upper poppet

a. Turn the steering wheel in the opposite direction (end of timing mark away from adjusting screw) until the other axle stop is contacted.
b. Pull hard on the steering wheel (put up to 40 lb rim pull on a 20" dia. steering wheel).
c. Release the steering wheel and shut off the engine.

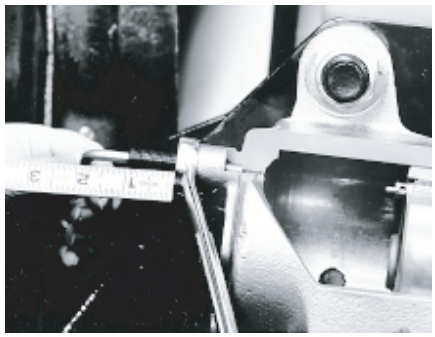
SAPH07Z080300040

(9) Loosen the sealing nut and back out the adjusting screw until 1" is past the nut. Tighten the sealing nut against the housing.

**⚠ CAUTION**
**Do not hold the steering wheel at full turn for more than 10 seconds at a time; the heat build-up at pump relief pressure may damage components.**


SAPH07Z080300041

(10) Set lower poppet

a. Start the engine and let it idle.
b. Turn the steering wheel in the original direction (end of timing mark toward adjusting screw), until axle stop contact is made.
c. Hold the steering wheel in this position (with up to 40 lb rim pull) for 10 seconds, then release.
Repeat this hold and release process as many times as necessary while completing step (11).

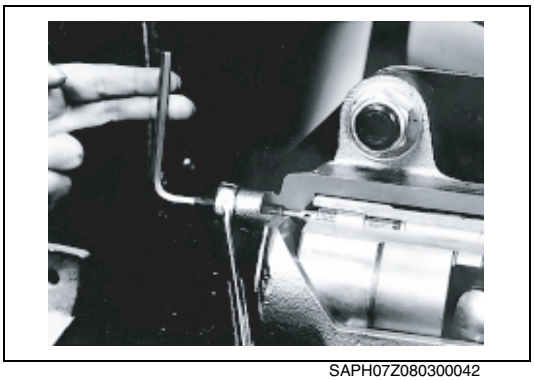

SAPH07Z080300042

(11) Position adjusting screw

a. With steering wheel held tightly at full turn loosen the jam nut and hold it in place with a wrench.
b. Turn the adjusting screw in (clockwise) using **finger-pressure only (don't use a ratchet),** until the Allen wrench stops. Do not attempt to turn it in further. Pause the turning-in process each time the driver releases the steering wheel; continue turning only while the wheel is held at full turn.
c. Back off the adjusting screw $3^{1}/_{4}$ turns and tighten the sealing nut. Torque sealing nut to **35 lbf·ft** (47.5 N·m).

(12) The poppets have now been completely reset.
Lower the vehicle. Check the reservoir and fill if required.

**⚠ WARNING**
**The length of the adjusting screw beyond the nut must be no more than $1^{1}/_{16}$" for proper thread engagement.**

**NOTICE**
**The length of adjusting screw beyond the sealing nut may be different for each vehicle.**

# RESEAL & REPAIR

EN07Z0803H300001

**1. DISASSEMBLY PREPARATION**

Stop the vehicle with wheels pointed straight ahead.

Clean off all outside dirt from around fittings and hose connections before you remove the gear.

Remove input and output shaft connections per vehicle manufacturer's instructions.

**⚠ WARNING**

**When using a chisel to spread a pinch bolt-type pitman arm boss for assembly or removal from the shaft, maintain a firm grip on the chisel at all times. Failure to do this may result in the chisel flying loose which could cause an injury. Never leave the chisel wedged in the pitman arm boss. If you cannot remove the pitman arm from the shaft with a chisel and your hands, remove the chisel from the arm boss and use a puller only to remove pitman arm.**

**⚠ CAUTION**

- **Do not use a hammer on the pitman arm to remove it from sector shaft as internal damage to steering gear could result. Be sure there is no spreading wedge left in the pitman arm boss before tightening pitman arm clamp bolt after assembly on sector shaft. Do not pound the universal joint or input shaft coupling on or off the input shaft as internal damage to the steering gear can result.**
- **Unless the poppet adjuster seat and sleeve assemblies (22) are to be removed and replaced or reset for automatic poppet adjustment, or a manual adjustment with a service poppet adjuster screw (59) and nut (60) is anticipated, do not allow the input shaft on a steering gear with the automatic poppet adjustment feature to rotate more than 1.5 input shaft revolutions from "straight ahead position" when the output shaft is disconnected from the vehicle steering linkage; this could disrupt the poppet setting achieved at initial installation. The steering gear is in the "straight ahead position" when the timing marks on the end of the housing trunnion and sector shaft are aligned.**

Remove the supply and return lines from the gear, and immediately plug all port holes and fluid lines.

**⚠ WARNING**

**TAS steering gears can weigh up to 110 pounds dry. Exercise caution when you remove, lift, carry, or fix in a bench vise.**

Remove the steering gear from the vehicle and take it to a clean work surface.

Clean and dry the gear before you start to disassemble it.

As you disassemble the gear, clean all parts in clean, OSHA approved solvent, and air blow-dry them only.

**⚠ WARNING**

- **Because they are flammable, be extremely careful when using any solvents. Even a small explosion or fire could cause injury or death.**
- **Wear eye protection and be sure to comply with OSHA or other maximum air pressure requirements.**

**⚠ CAUTION**
**Never steam clean or high-pressure wash hydraulic steering components. Do not force or abuse closely fitted parts. Use care that bearing and sealing surfaces are not damaged by the assembly and disassembly procedures.**

Keep each part separate to avoid nicks and burrs.

Discard all seals, O-rings, and gaskets removed from the gear. Replace them with new parts only.

The steering gear should be identified to the vehicle from which it was removed. The poppet adjuster seat and sleeve assemblies are set for that particular vehicle only.

**2. DISASSEMBLY**

(1) Put the steering gear in a vise, clamping firmly against the housing mounting flange or boss. Input shaft should be horizontal; side cover and valve housing are accessible for disassembly.

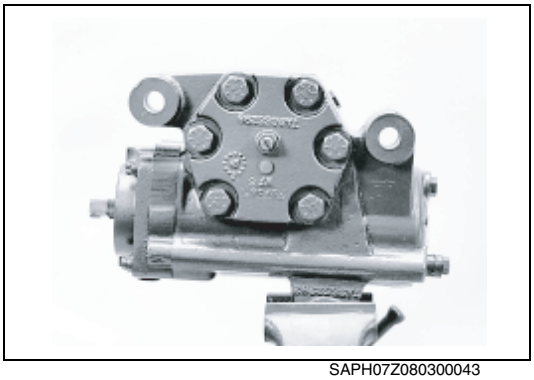
SAPH07Z080300043

**⚠ CAUTION**
**Do not clamp against body of housing. If mounting boss or flange is not accessible, fabricate and attach a mounting plate to the housing mounting bosses.**

(2) Prepare for fluid drainage and unplug hydraulic ports.

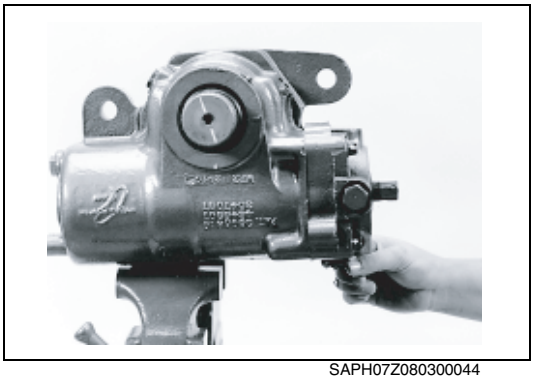
SAPH07Z080300044

(3) Rotate the input shaft until the timing mark on the end of the sector shaft is in line with the timing mark on the end of the housing. This will position the sector shaft for removal.

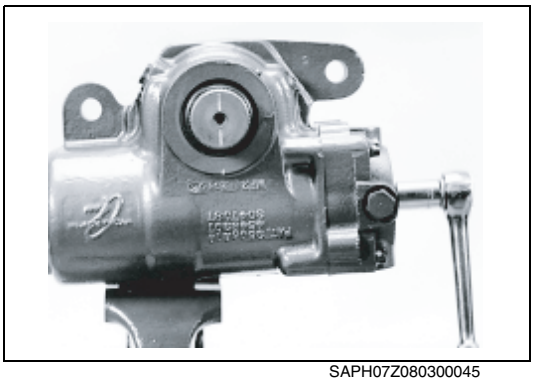
SAPH07Z080300045

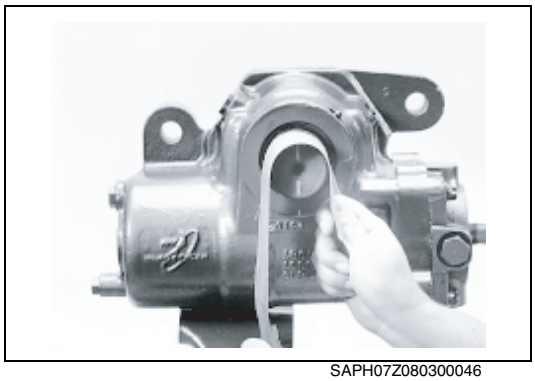
SAPH07Z080300046

(4) Remove any paint or corrosion from the exposed area of the sector shaft (42).

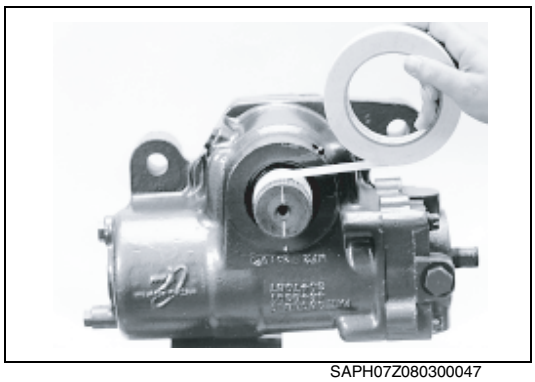
SAPH07Z080300047

(5) Tape the serrations and bolt groove of the sector shaft with one layer of masking tape. The tape should not extend onto the sector shaft bearing diameter.

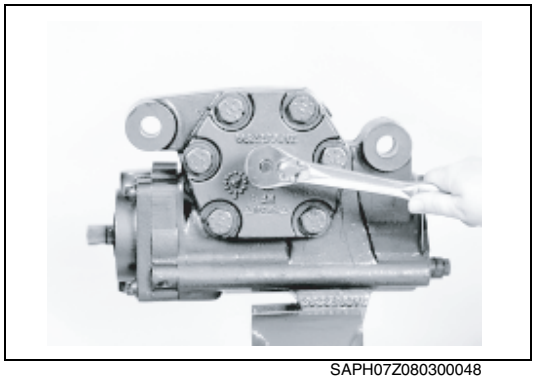
SAPH07Z080300048

(6) Remove the sector shaft adjusting screw jam nut (47).

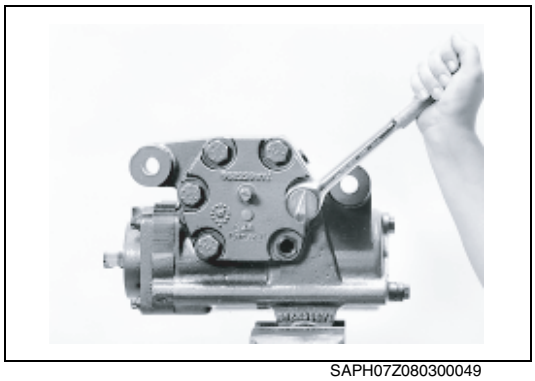
SAPH07Z080300049

(7) Be prepared for more fluid drainage and remove the six or eight special bolts (48) from the side cover (46).

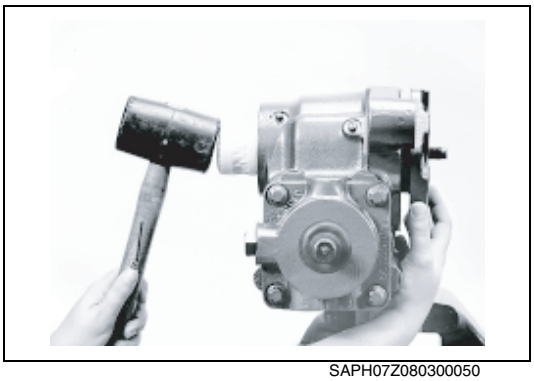
SAPH07Z080300050

(8) Be prepared for more fluid drainage and remove the side cover and sector shaft assembly from the gear.
You may start the shaft and cover assembly removal by tapping the end of the shaft lightly with a soft mallet or wooden hammer handle.


SAPH07Z080300051

(9) Remove and discard the side cover gasket (45).

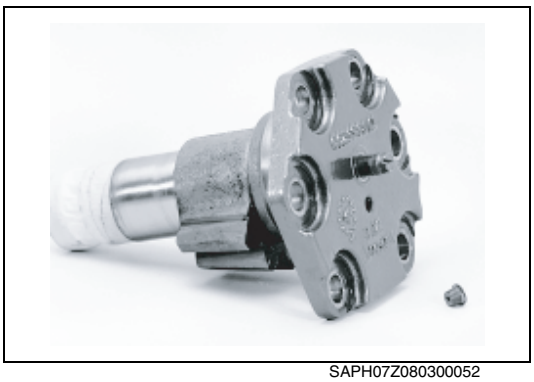
SAPH07Z080300052

(10) Remove and discard the vent plug (49).

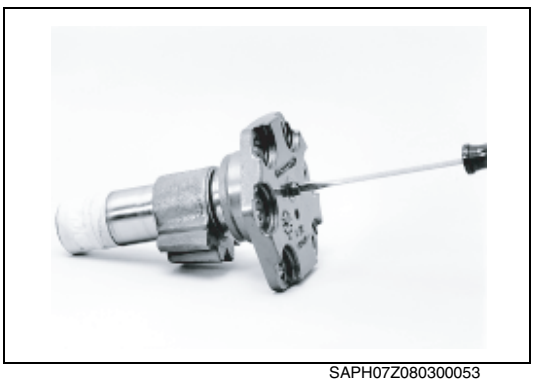
SAPH07Z080300053

(11) Screw sector shaft adjusting screw (43) clockwise through the side cover and pull the sector shaft out of the side cover.


SAPH07Z080300054

(12) Clamp the side cover in a vise. Place a standard $^{5}/_{8}$" or $^{11}/_{16}$"-$^{3}/_{8}$ drive socket in the center of the side cover. pry the seal (41) out with a rolling head pry bar, using the socket for support. Discard the seal and remove the socket.

⚠ **CAUTION**
**Don't damage the bore or DU bushing when removing the seal.**


SAPH07Z080300055

(13) Inspect the sector shaft assembly for damaged adjusting screw threads. The retainer (44) must be securely staked in place. The adjusting screw must rotate by hand with no perceptible end play (lash).

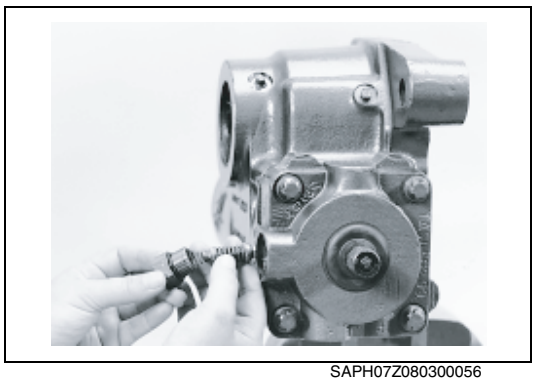
SAPH07Z080300056

(14) If equipped, remove relief valve cap (56), O-ring (57) and two-piece relief valve (58) from the valve housing. Discard the O-ring.

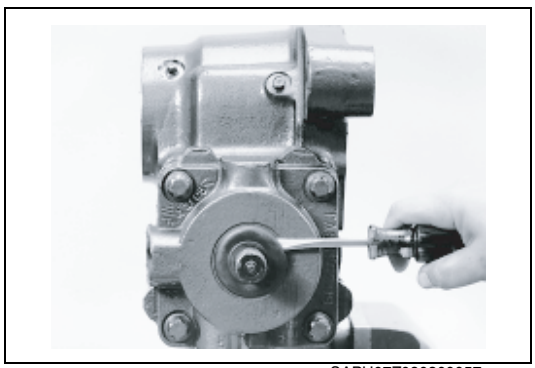
SAPH07Z080300057

(15) Remove and discard the dirt & water seal (2, 2B or 2C) from the input shaft (13 or 13A). Save this seal for comparison with the new seal.

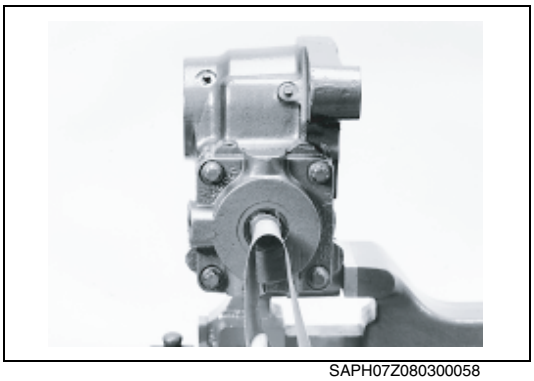
SAPH07Z080300058

(16) Clean any paint or corrosion from the exposed area of the input shaft.

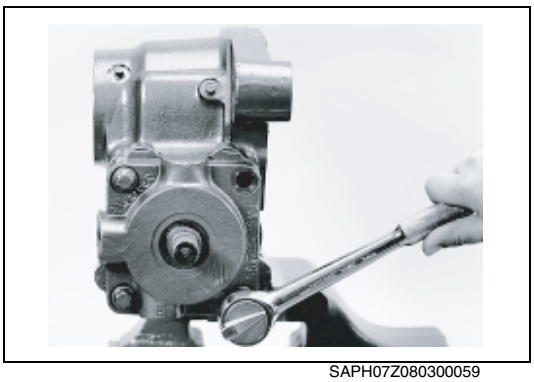
SAPH07Z080300059

(17) Remove the four torx head valve housing bolts (1).

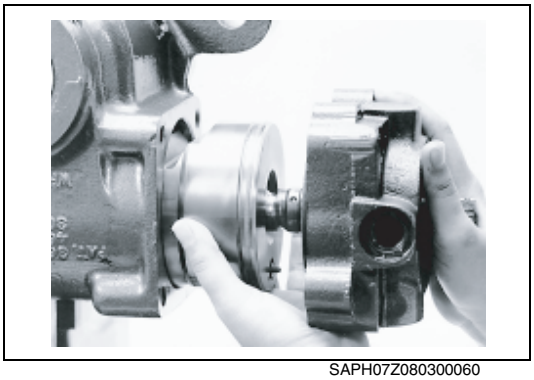
SAPH07Z080300060

(18) Be prepared for more fluid drainage and remove the rack piston subassembly. Place the assembly on a clean cloth. For the TAS85 it may help to rotate the input shaft to move the rack piston toward the lower end of the housing. This will force the valve housing to exit the main housing.

**⚠ CAUTION**
**The set position of poppet seat and sleeve assemblies (22) must not be disturbed if the poppets are not going to be replaced or reset during disassembly.**

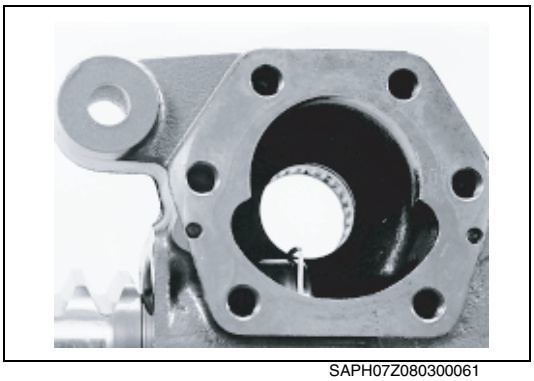
SAPH07Z080300061

**NOTICE**
**If your gear is short "V" construction, the rack piston seal is on the end of the rack piston farthest from the input shaft. Remove the seal before removing the valve housing assembly to prevent the Teflon rack piston seal ring (20) from "hanging up" when it exits the housing. Expose the seal through the sector shaft cavity, then cut and remove the seal ring from the rack piston.**

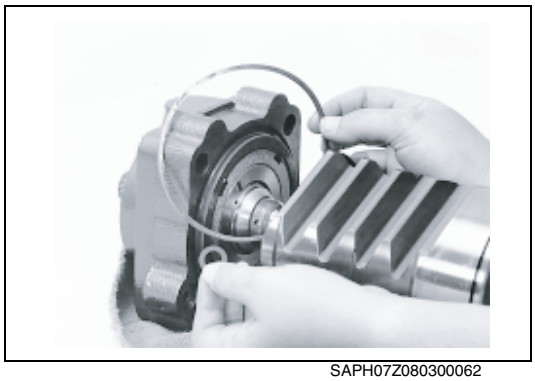
SAPH07Z080300062

(19) Remove and discard the valve housing seal rings (6 & 7).

**⚠ CAUTION**
**Do not remove the input shaft, valve worm assembly or balls from the rack piston until the ball return guides are removed as damage to the ball guides will occur.**

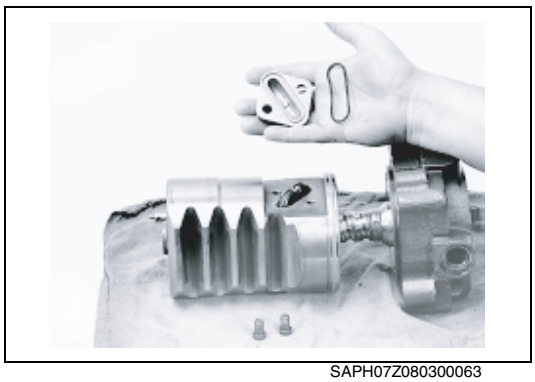
SAPH07Z080300063

(20) Remove and discard the two special sealing screws (31). Remove the ball return cap (30) and seal (29), or strap (32), discard the seal. (cap type)

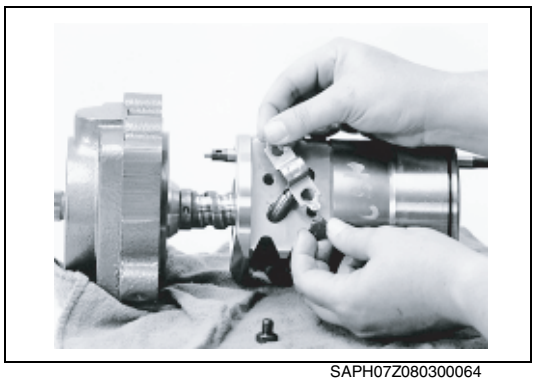
SAPH07Z080300064

(21) Bend down the two tabs (tangs) that are against the hex head bolts. Remove two bolts and the clip. Discard the clip. (clip type)

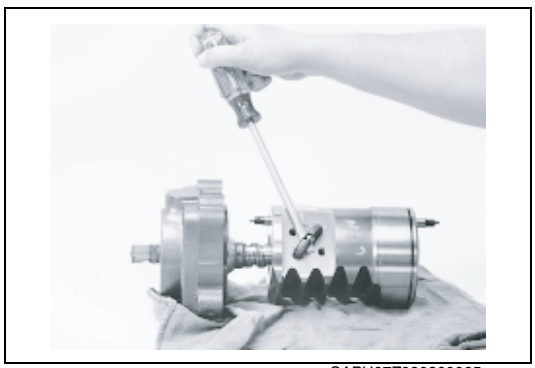
SAPH07Z080300065

(22) Make sure the rack piston is on a cloth so the steel balls that fall out won't roll very far. Remove ball return guide halves (28) by carefully inserting a screwdriver between the rack piston and guides.

**NOTICE**
**Left hand ball return guide halves are copper plated for identification and right hand guides are not plated.**
**Retain the guides for reassembly.**

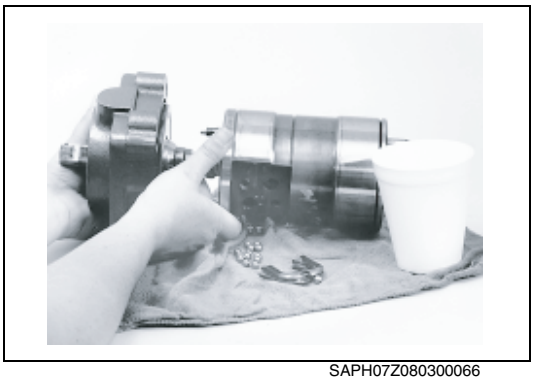
SAPH07Z080300066

(23) Remove the steel balls (27) from the rack piston (19) by rotating the input shaft, valve worm assembly until the balls fall out. Place the balls and return guides in a cup or other container. Count the balls, and make sure all have been removed.

**⚠ CAUTION**
**The steel balls are a matched set. If any are lost, the set must be replaced by service balls. Number of factory balls installed: TAS40-29, TAS55-31 (30 if date code is 337-89 or earlier), TAS65-32, TAS85-34.**


SAPH07Z080300067

(24) Remove the input shaft, valve/worm, valve housing subassembly from the rack piston.

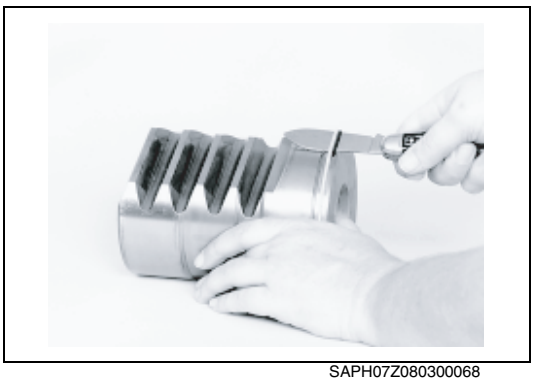
SAPH07Z080300068

(25) Cut and remove the Teflon seal ring (20) and O-ring (21) from the rack piston if not removed during disassembly step (18) NOTICE.

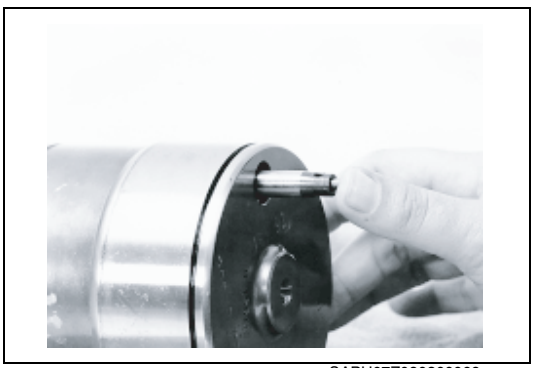
SAPH07Z080300069

(26) Push poppet stems, they should spring back. Push poppet seat, it should not move by hand. If components are bent or broken, poppet stems don't spring back, or poppet seat moves by hand, go to **Poppet Component Replacement** section on page SR03-40. Otherwise, proceed to step (27).

**NOTICE**
**TRW recommends the poppet adjuster seat and sleeve assemblies (22) not be removed unless replacement of poppet components is required.**


SAPH07Z080300070

(27) Inspect valve housing/worm screw subassembly for heat damage or bearing roughness. If these conditions are present, or if there was excessive internal leakage, or if preload adjustment is required, go to **Valve Housing/Worm Screw Disassembly** procedures on page SR03-43. If not, proceed to step (28).

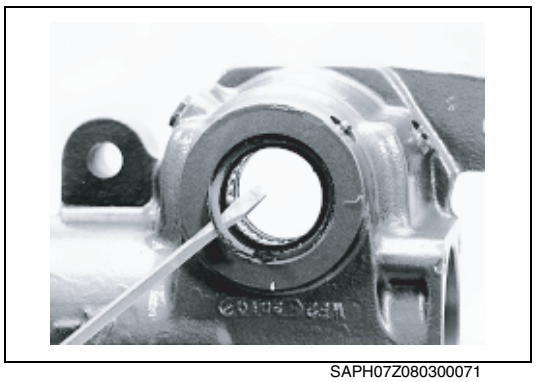
SAPH07Z080300071

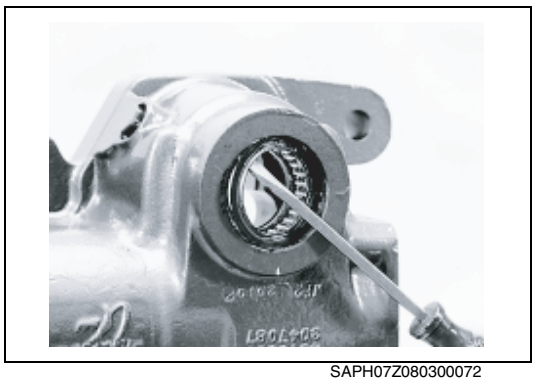
SAPH07Z080300072

(28) Remove and discard the dirt and water seal (61).

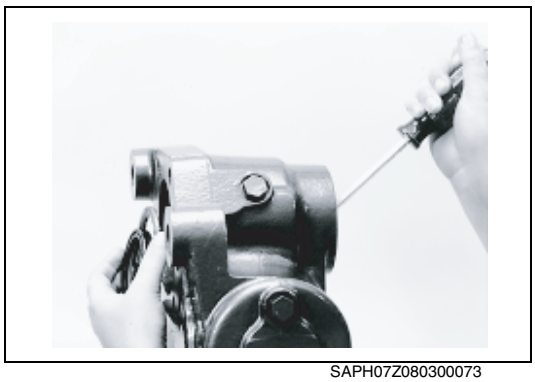
SAPH07Z080300073

(29) Remove the retaining ring (63) through the side cover opening. Then insert a screwdriver through the trunnion opening, and carefully push the seal (41) out **without damaging the sealing area of the bore.** Discard the seal.

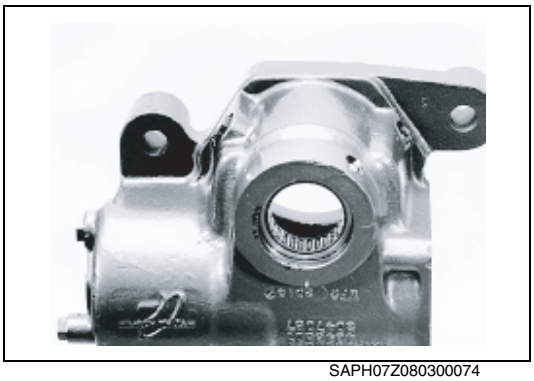

SAPH07Z080300074

(30) Inspect the roller bearing (37) for brinelling or spalling. If replacement is required, go to **Roller Bearing Replacement-Step Bore** on page SR03-51. If not, proceed to step (31).

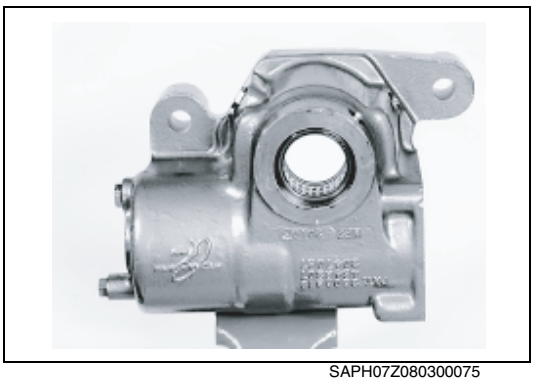

SAPH07Z080300075

(31) Inspect the following for damage:

- Poppet fixed stop screw (52 or 52A) and washer (53) if equipped.
- Poppet adjusting screw (59) and sealing nut (60)
- Auto-bleed plug (51)
- Manual bleed screw (50)
- Auxiliary port plugs (54) and O-rings (55)

If any are damaged, go to **Replace Housing Ports, Plugs and Screws** on page SR03-52. If not, proceed to the Inspection Section.

**3. INSPECTION**

**Make sure all sealing surfaces and seal cavities are free from nicks and corrosion. Any nicked or corroded surface requires part replacement to ensure proper sealing.**

**Wash all parts in clean, OSHA approved solvent. Air blow them dry only.**

**⚠ WARNING**

- **Because they are flammable, be extremely careful when using any solvents. Even a small explosion or fire could cause injury or death.**
- **Wear eye protection and be sure to comply with OSHA or other maximum air pressure requirements.**
- **Any of the following conditions present in the steering gear indicates impact damage.**

| Condition | Area |
|---|---|
| **Brinelling** | • **Ball track grooves of rack piston**<br>• **Ball track grooves of worm screw**<br>• **Bearing area of sector shaft**<br>• **Thrust washers and bearings in valve housing** |
| **Cracks or Breaks** | • **Bearing area of sector shaft**<br>• **Sector shaft teeth**<br>• **Rack piston teeth**<br>• **Housing**<br>• **Thrust washers and bearings in valve housing**<br>• **Worm screw** |
| **Twisted serrations** | • **Output shaft serrations** |

**If one of these conditions is found in one component, be sure to inspect all components carefully for signs of impact damage. Replace components noted in individual inspection steps below if you suspect impact damage. Failure to replace all damaged components could result in a serious vehicle accident.**

(1) Inspect the rack piston (19) teeth for cracks or obvious damage. If teeth are damaged, replace the rack piston, sector shaft (42) and set of balls (27).



SAPH07Z080300076


SAPH07Z080300077

(2) Inspect the rack piston (19) ball track grooves for brinelling or spalling. If either condition exists, replace the input shaft, valve/worm assembly, valve housing, rack piston subassembly and balls.


SAPH07Z080300078

(3) Inspect the sealing area of input shaft and valve (13 or 13A) for nicks, and damage. Inspect for discoloration from excess heat. Inspect input shaft ball-track grooves for brinelling or spalling. If any of these conditions exist, replace the input shaft, valve worm assembly, valve housing and balls. Also replace rack piston if brinelling or spalling is found.

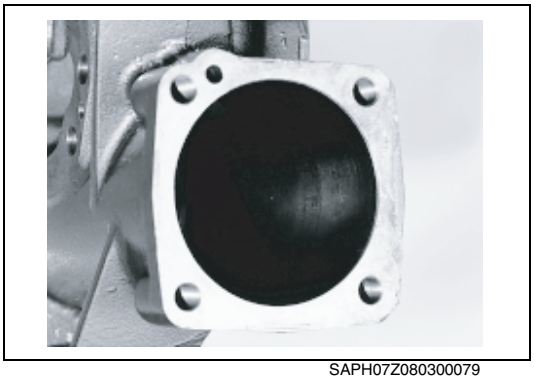
SAPH07Z080300079

(4) Inspect the housing (34) cylinder bore. Some scoring marks are normal. If there was internal leakage greater than 1 gal/mm (3.8 L/min), make sure there are no damaged seals before replacing the housing.

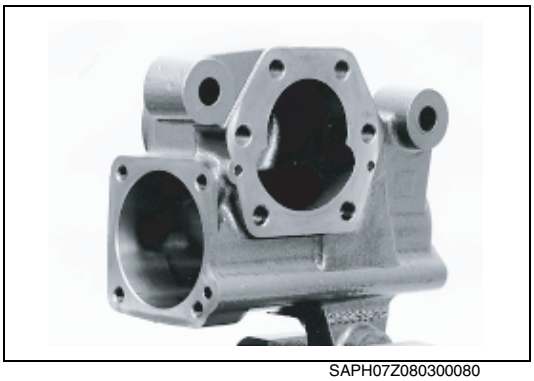
SAPH07Z080300080

(5) Inspect the housing faces for nicks that would prevent proper sealing. Replace the gear housing if these nicks are present and cannot be easily removed with a fine-tooth flat file without changing the dimensional characteristics.



SAPH07Z080300081

(6) Inspect side cover (46) DU bushing for damage. Also check side cover bushing to sector shaft clearance. If damage exists, or if clearance exceeds .008" (0.20 mm) replace side cover/bushing assembly.

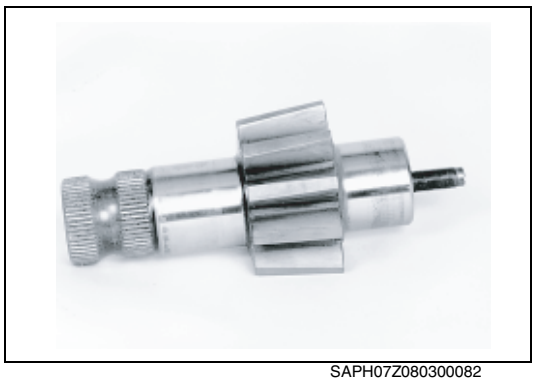

SAPH07Z080300082

(7) Inspect the sector shaft (42) bearing and sealing areas and sector teeth contact surfaces for brinelling, spalling or cracks. Run your fingernail edge across these areas to detect steps. Remove masking tape from the shaft and inspect for twisted or otherwise damaged serrations. If any of these conditions exist, replace the sector shaft.

**NOTICE**

**A service sector shaft will come assembled with the adjusting screw (43) and retainer (44).**

**4. ASSEMBLY PREPARATION**

**Wash all parts in clean, OSHA approved solvent. Air blow-dry them only.**

**⚠ WARNING**

- **Because they are flammable, be extremely careful when using any solvents. Even a small explosion or fire could cause injury or death.**
- **Wear eye protection and be sure to comply with OSHA or other maximum air pressure requirements.**

**Replace all seals, seal rings, and gaskets with new ones each time you disassemble the gear.**

**TRW Commercial Steering Division makes complete seal kits available. These parts can be purchased through most OEM parts distributors. Contact your local dealer for availability.**

**5. ASSEMBLY**

(1) Assemble new seal (41) onto bearing and seal tool (short end) so the lip with the garter spring is toward the shoulder of the tool. Working from the side cover side of the housing, pilot the seal tool into the washer and bearing and press with a force of 100-800 lb (445-3,560 N) until the seal is seated firmly.

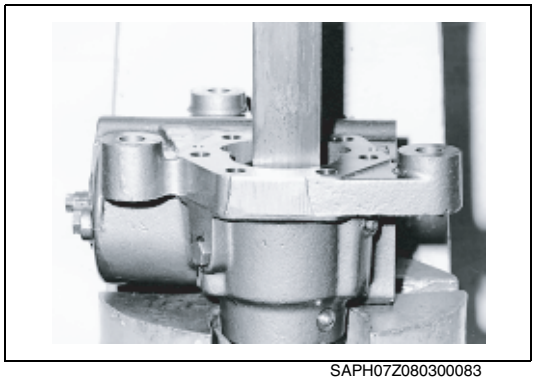

SAPH07Z080300083

Install the inside retaining ring (63) from the side cover opening. Seat the ring firmly in the retaining ring groove.



SAPH07Z080300084

(2) Install the dirt & water seal (61) with the bearing and seal tool (long end), making sure it is not cocked. **Press the seal only until it seats against the bearing, don't push it in farther.**

Liberally pack the roller bearing and new seals with clean, high temperature industrial grease, Exxon Unirex* RS460.

*Trademark of Exxon Oil Corp.

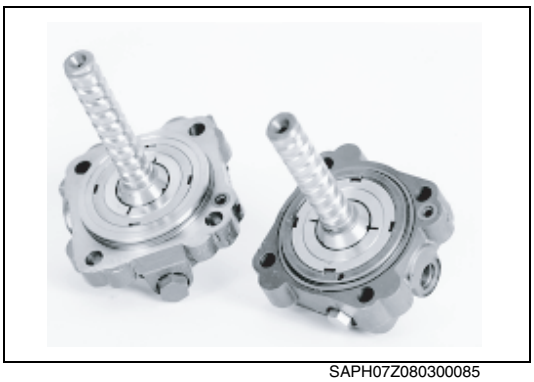

SAPH07Z080300085

(3) Lightly oil new seal ring (7) and assemble in valve housing mounting face groove.

Oil new seal ring (6) and assemble in valve housing mounting face groove.



SAPH07Z080300086

(4) Install a new backup O-ring (21) and then a new Teflon seal ring (20) on rack piston (19). Do not over-stretch these rings as you install them. Do not allow the Teflon seal ring to be twisted.

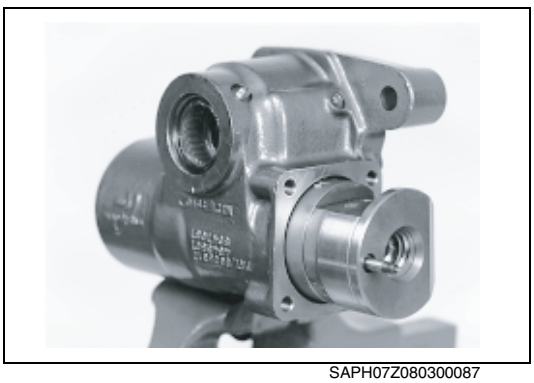

SAPH07Z080300087

(5) Apply clean oil to housing cylinder bore. Place the rack piston (19) in the housing piston bore with ball return guide holes up.

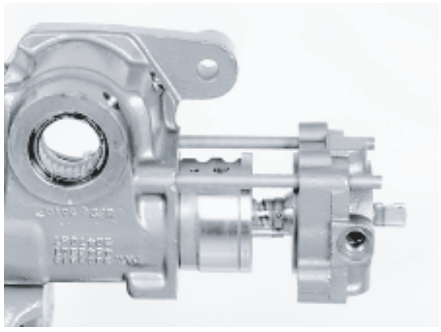

SAPH07Z080300088

(6) Insert the worm screw into the rack piston close to maximum depth, without the valve housing making contact with the poppet stem. Insert two $^{7}/_{16}$"-14 All threads through valve housing bolt holes and tighten into housing to support the worm screw. Line up rack piston ball guide holes with the worm ball track grooves by rotating the input shaft.

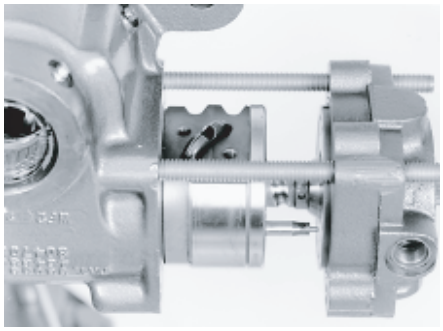

SAPH07Z080300089

(7) Assemble the ball return guide halves (28) into the rack piston until seated, rotate the input shaft slightly if necessary.

**⚠ WARNING**
**Do not seat guides with a hammer.**
**Damage to guides can result in subsequent lockup or loss of steering.**

**⚠ CAUTION**

- **If a new rack piston (19) or a new input shaft, valve, worm subassembly (13 or 13A) is being assembled, the balls (27) removed from the unit must be discarded and a service ball kit utilized. The balls in a service ball kit are sized to function in the ball track guide path as altered by component replacement.**
- **When using the service ball kit, use the correct quantity of service balls: TAS65-32.**

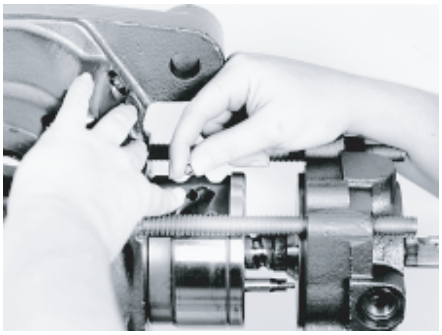

SAPH07Z080300090

(8) **Hold the ball return guides (28) firmly in place during this entire procedure.** Insert as many of the steel balls as you can through the hole in the top of the ball return guides. Rotate the input shaft to pull the balls down and around the ball track guide path. Continue until the correct number of balls are in the ball track guide path.

**⚠ WARNING**

- **Hold down the ball return guides until cap or clip is reinstalled. Failure to hold the guides will result in a trapped ball or balls, which could cause a vehicle accident. If the ball guides become unseated (raise up) at any time, repeat the procedure starting at step (5).**
- **The correct number of balls are required for proper gear operation.**
  **Count the balls and insert each carefully as in step (7).**

| | TAS65 |
|---|---|
| **Original** | **32** |
| **Service** | **32** |

**⚠ CAUTION**

- **Do not allow valve housing to contact the poppet stem or move more than $2^{1}/_{2}$ inches (69.1 mm) from upper end of rack piston during these procedures. This could incorrectly reset the poppet, or back out worm beyond closed ball loop, trapping balls.**
- **Remove any fluid present in the two screw holes. Fluid in these holes could cause improper clamp load when torquing the cap or strap screws.**

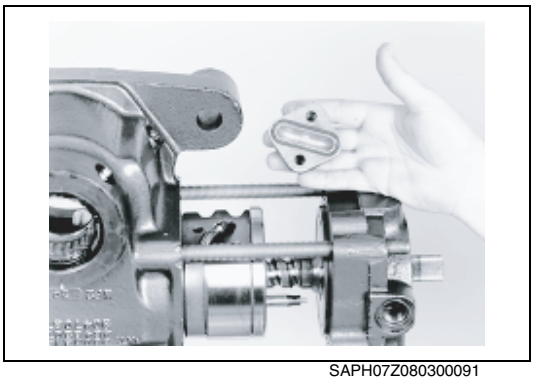
SAPH07Z080300091

(9) Place a new ball return guide cap seal (29) in the seal groove of the cap (30). Make sure the seal makes full contact with the rack piston surface. Install two new Allen or Torx head screws (31) and torque each screw alternately until a final torque of **18 lbf·ft** (24.5 N·m) is achieved.

**⚠ CAUTION**
**Ball cap seal is greased to hold seal in groove while assembling. Be sure not to trap the seal outside of the groove during reassembly.**

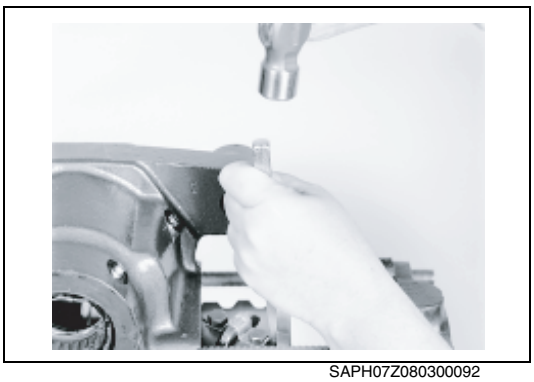
SAPH07Z080300092

(10) If your gear was equipped with the ball return guide strap (32), or if it was equipped with the clip, install the new ball return guide strap. Position it on the rack piston, install two new Allen or Torx head screws (31) and torque each screw alternately until a final torque of **18 lbf·ft** (24.5 N·m) is achieved.

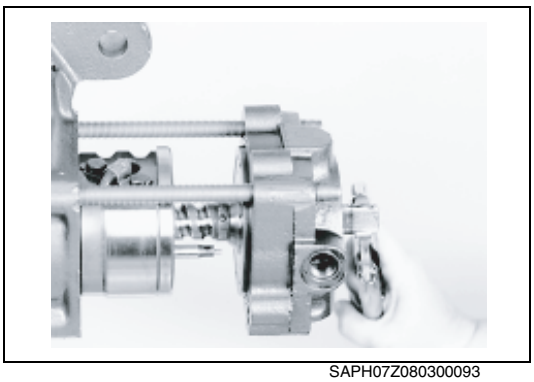
SAPH07Z080300093

(11) Rotate the input shaft from one end of travel to the other without contacting the poppet stem to the valve housing, and without moving the valve housing face more than $2^{1}/_{2}$" (69.1 mm) from input end (upper end) of rack piston. If you cannot rotate the input shaft, remove the balls and reassemble them.

**⚠ WARNING**
**If you install a gear on a vehicle with the worm shaft unable to rotate, the gear will not function correctly. Steering and gear failure may result.**

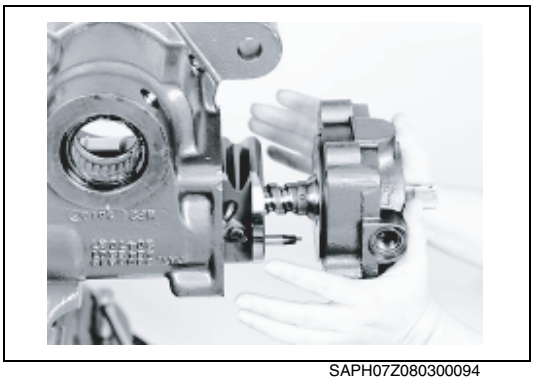
SAPH07Z080300094

(12) Apply clean oil to Teflon seal ring (20) on rack piston. Make sure there is a space of $^{3}/_{8}$-$^{1}/_{2}$" (10.0-13.0 mm) between valve housing (5) and poppet stem to prevent poppet contact at either end. Remove the All Threads, and push the rack piston assembly into the housing with the rack piston teeth toward the sector shaft cavity. Line up the valve housing cylinder feed hole with the gear housing feed hole. Make sure both O-rings in the valve housing remain in position.

**⚠ CAUTION**

- **Do not damage the seal ring (19) while installing the rack piston into housing. If the seal ring end of rack piston enters the housing first, the seal ring will be destroyed when the rack is removed.**
- **The poppet seat and sleeve assemblies (22) must not bottom against the internal poppet stops in the steering gear until the gear is installed on the vehicle and the poppet adjustment procedures are performed.**

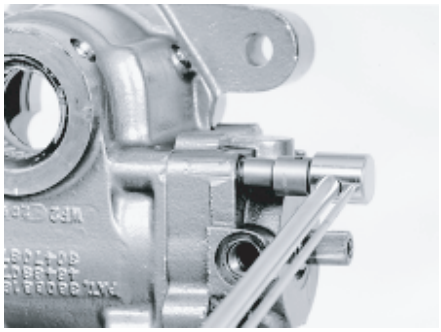
SAPH07Z080300095

(13) Lubricate and install the four valve housing bolts (1) into the housing. Torque the **bolts alternately to 80 lbf·ft** (108.5 N·m).

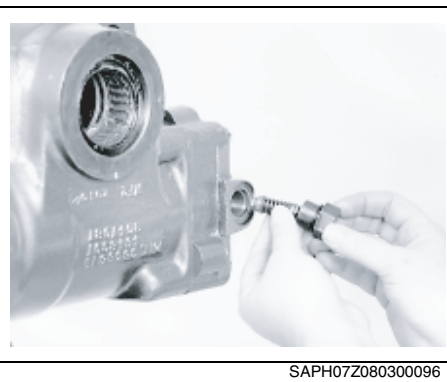
SAPH07Z080300096

(14) If the gear is equipped with a relief valve, assemble a new O-ring (57) on relief valve cap (56). Assemble the small end of tapered spring onto the pin on the relief valve cartridge and insert the assembly (58), (large end of tapered spring end first) into the relief valve cap cavity. Turn the relief valve cap as assembled into the valve housing and torque to **30 lbf·ft** (41 N·m).

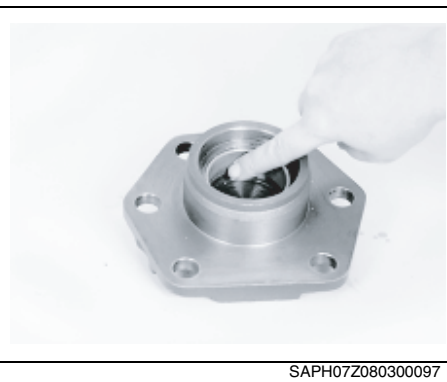
SAPH07Z080300097

(15) Lightly oil DU bushing. **Do not grease.**

**⚠ CAUTION**
**This bearing is sealed and will receive no lubrication from the hydraulic fluid in the gear. Failure to use the proper grease could result in premature bearing wear.**

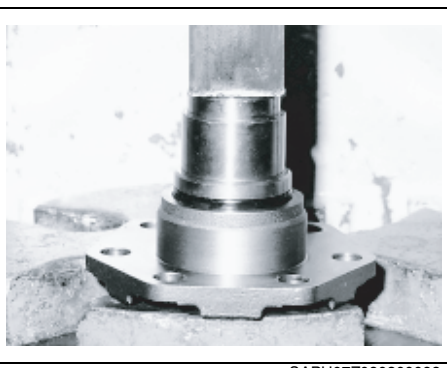
SAPH07Z080300098

(16) Grease and assemble new seal (41) onto installation tool so the side with the garter spring is against the shoulder of the tool. Pilot the tool into the side cover (46) with a force of 100-800 lb (445-3560 N) until it is seated against the bearing or bushing.

**⚠ CAUTION**
**Make sure the OD of the seal, and the ID of the bore are free from grease and dust, for proper engagement of the seal.**


SAPH07Z080300099

(17) Lightly oil short bearing area of sector shaft. **Do not grease.**

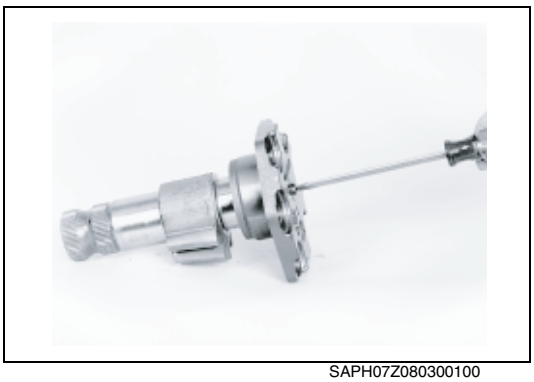
SAPH07Z080300100

(18) Insert the sector shaft (42) into the side cover subassembly (46), and screw the sector shaft adjusting screw (43) counterclockwise into the side cover until the screw reaches solid height.

Rotate the adjusting screw clockwise one half turn so the side cover will rotate freely on the sector shaft.

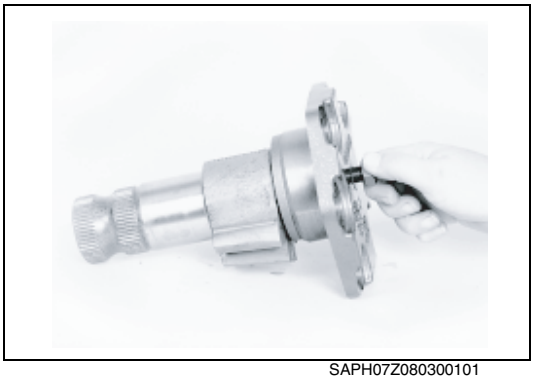
SAPH07Z080300101

(19) Install the sector shaft adjusting screw jam nut (47) onto the sector shaft adjusting screw (43) a few threads. Final adjustment will be made later.


SAPH07Z080300102

(20) Press the new vent plug (49) into the hole provided in the side cover until the plug is bottomed.

**⚠ WARNING**
**Do not weld or otherwise plug this hole in any permanent manner. This is a safety vent which functions only if the side cover seal fails. If the seal fails and the plug cannot vent, the steering gear may lock-up or otherwise malfunction.**



SAPH07Z080300103

(21) Apply clean grease to the new side cover gasket (45) to hold it in place and assemble it onto the side cover (46).

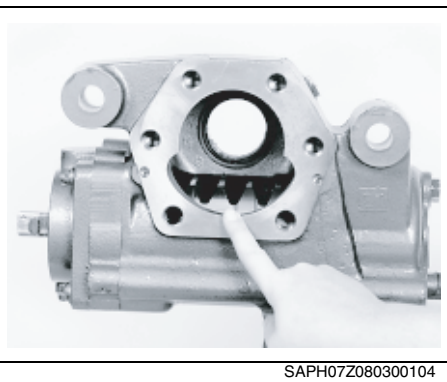

SAPH07Z080300104

(22) There are four teeth on the rack piston. Rotate input shaft to position the rack piston so the space between the second and third tooth is in the center of the sector shaft opening. This will center the rack piston for assembly of sector shaft.

**⚠ WARNING**
**If the rack piston is not centered when sector shaft is installed, gear travel will be severely limited in one direction. This could result in an accident.**

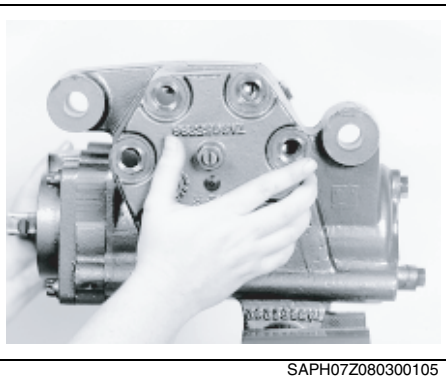

SAPH07Z080300105

(23) Clean off any old tape on the serrations. Reapply one layer of masking tape. Install the sector shaft assembly into the housing. The center tooth of the sector shaft must engage the center space (between the second and third tooth) of the rack piston, with side cover gasket in place.

**⚠ CAUTION**
**If the serrations are not properly taped, they will damage the output seal (38) in housing, causing the seal to leak.**

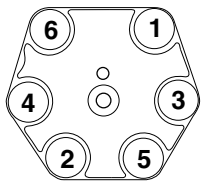


**TAS40, 65**

SAPH07Z080300106

(24) Install bolts in positions 3 and 4 first, by hand. Install the remaining special side cover bolts (48) into the side cover and torque them in the sequence shown. If bolts must be replaced, use bolts of the same design, type and length as those you removed. Do not use a substitute.

Lubricate side cover bolts and torque, TAS65 bolts to **170 lbf·ft** (230 N·m).

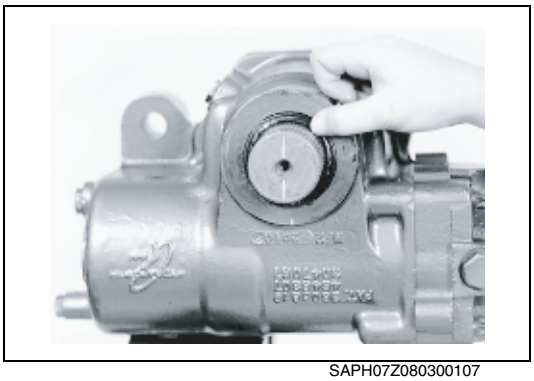
SAPH07Z080300107

(25) Remove tape from the sector shaft.

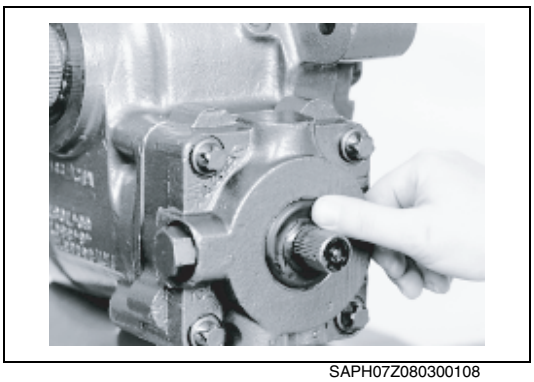
SAPH07Z080300108

(26) Pack the end of the valve housing bore around the input shaft with clean, high temperature industrial grease, Exxon Unirex* RS460. Apply more of the grease to the inside of a new dirt and water seal (2, 2B or 2C) and install it over the input shaft. Seat the seal in the groove behind the serrations and against the valve housing.

This step may have already been completed if you disassembled the valve housing and worm screw for repair.

**Proceed to Final Adjustments on page SR03-53.**

*Trademark of Exxon Oil Corp.

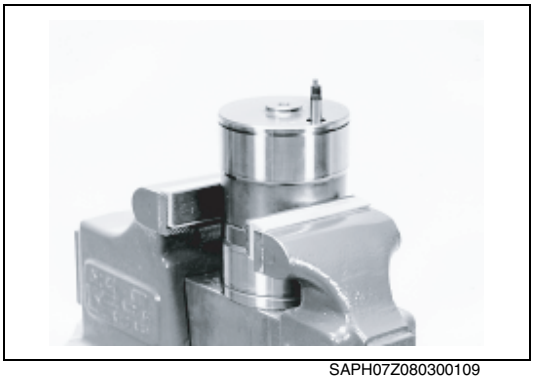
SAPH07Z080300109

## 6. POPPET COMPONENT REPLACEMENT

(1) If the poppet assemblies are to be removed for replacement, place rack piston in a soft-jawed vise.


SAPH07Z080300110

(2) Slide special tool #J36452-A over the seat of poppet adjuster seat and sleeve assembly (22) and engage tool in the slots in the threaded sleeve. Hit the end of the tool firmly four or five times with a 2 lb sledge hammer to loosen Loctite.

**⚠ CAUTION**

**Poppet adjuster seat and sleeve assemblies (22) are retained by Loctite applied to the threads which makes the assemblies difficult to remove.**



SAPH07Z080300111

(3) With a ratchet applied to the tool, turn one adjuster seat and sleeve assembly out of the rack piston. If the ratchet does not turn easily, strike the adjuster removal tool again with a hammer. If the engaging tangs won't stay in place while torquing, it might be necessary to hold in place with an arbor press while applying loosening torque. Discard poppet seat and sleeve assembly.



SAPH07Z080300112

(4) Remove the two poppets (23 or 23A), spring (24), and push tube (26). Some gears will also have a spacer rod (25) to be removed.

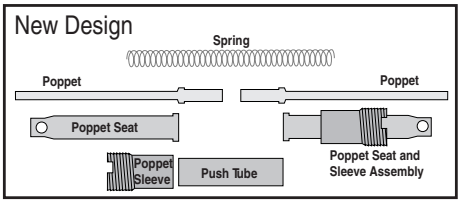


SAPH07Z080300113



SAPH07Z080300114

(5) Remove and discard remaining poppet seat and sleeve assembly only if required.

**NOTICE**

**It is possible to reset one poppet adjuster seat and sleeve assembly for automatic poppet adjustment while it is in the rack piston if one adjuster seat and sleeve assembly and the poppets, spring, spacer rod and push tube are removed.**

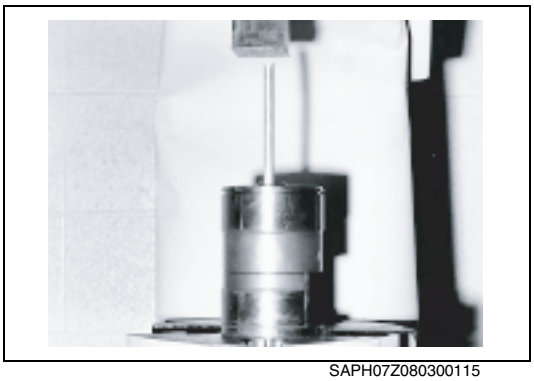
SAPH07Z080300115

(6) If one poppet seat and sleeve assy. (22) was left in rack piston, it can be reset for automatic poppet adjustment by inserting a $^{3}/_{8}$" (9.52 mm) diameter X 6" (152.4 mm) drill rod down through the poppet seat hole at the opposite end of the rack piston and against the adjuster seat to press the seat in until it bottoms against the adjuster sleeve.


SAPH07Z080300116

(7) Carefully apply Locquic "T" primer to the threads in poppet holes, and threads on the new seat and sleeve assemblies (22). Allow to dry for ten minutes; then carefully apply Loctite® RC680 to same threads.

**⚠ CAUTION**
**Do not allow Loctite or Locquic to get on the adjuster seat component of the adjuster seat and sleeve assembly. The poppets will not function properly.**


SAPH07Z080300117

(8) Place rack piston (19) in a soft-jawed vise and turn one new poppet adjuster seat and sleeve assembly (22), (slotted end out) into the poppet hole in one end of rack piston.

**⚠ WARNING**
- **Wear eye protection while assembling poppets, as spring loaded poppets could eject and cause eye injury.**
- **Do not use the spacer with the new poppet design. You must install the spacer with the old poppet design.**


SAPH07Z080300118

(9) From the other end of the poppet hole in the rack piston, install: one poppet (23A), poppet spring (24), push tube (26), other poppet (23A), and the other new poppet adjuster seat and sleeve assembly (22). The new components will stack up as shown below.

Torque both poppet seat and sleeve assemblies to **18 lbf·ft** (25 N·m).

**Return to step (27), page SR03-29.**

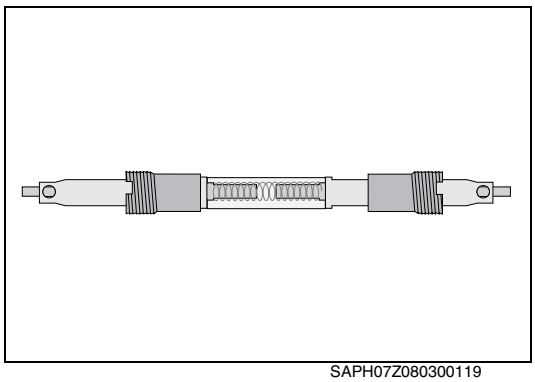
SAPH07Z080300119

**7. VALVE HOUSING/WORM SCREW DISASSEMBLY**

(1) With worm vertical, place the valve housing, input shaft, valve/worm assembly in a vise.

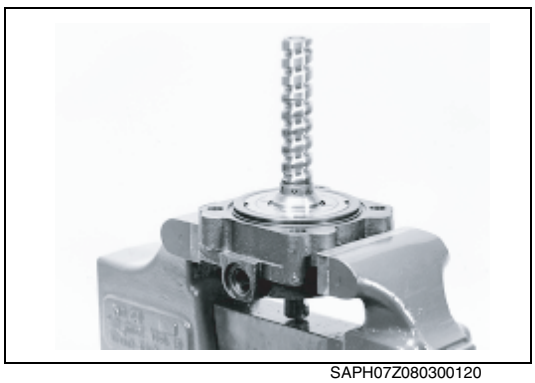
SAPH07Z080300120

(2) Unstake the valve housing (5) where it was upset into the adjuster locknut (18) slot. Also unstake adjuster nut from adjuster (17).


SAPH07Z080300121

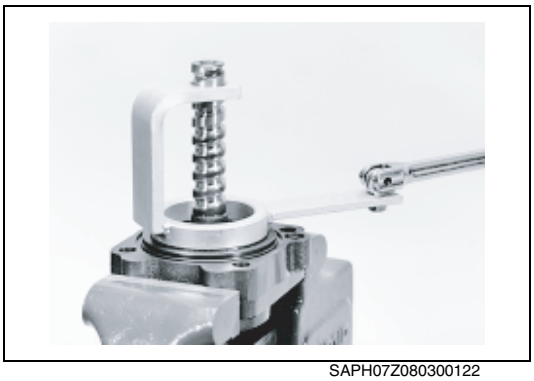
SAPH07Z080300122

(3) Turn bearing adjuster locknut (18) out of the valve housing.

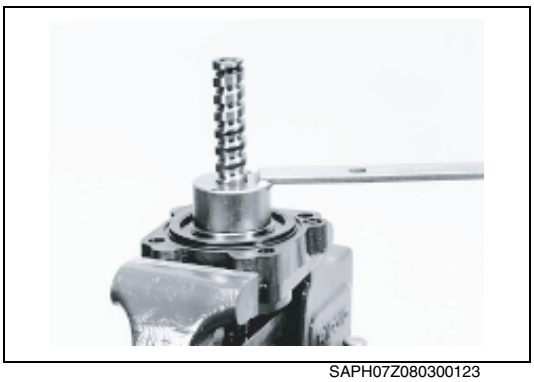
SAPH07Z080300123

(4) Turn bearing adjuster (17) out of the valve housing.


SAPH07Z080300124

(5) Remove and discard seal ring (8) and O-ring (9) from bearing adjuster.

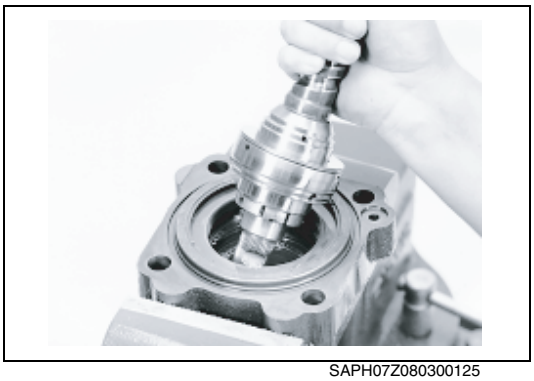
SAPH07Z080300125

(6) Remove the input shaft, valve/worm assembly (13 or 13A) from the valve housing.



SAPH07Z080300126

(7) Remove thin thrust washer (16) and thrust bearing (15) from input shaft.

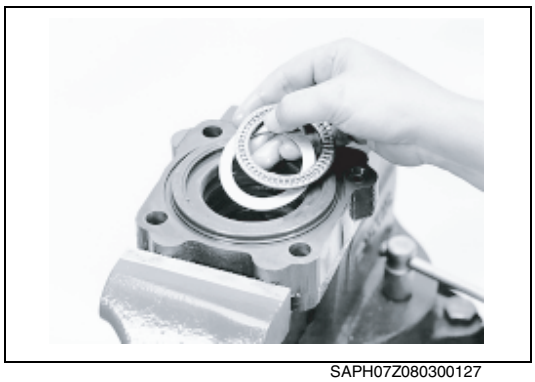

SAPH07Z080300127

(8) Remove thick thrust washer (12) and thrust bearing (15) from valve housing.

**⚠ CAUTION**
**Input shaft, valve worm assembly must not be disassembled further. The components were a select fit at assembly and are available only as part of this subassembly. If disassembled further, the subassembly must be replaced.**



SAPH07Z080300128

(9) For alternate construction TAS65 gears, remove spacer sleeve (14), thin washer (16), thrust bearing (15) and thick washer (12).

**⚠ WARNING**
**If the TAS65 gear has a ball bearing and ball race in the valve housing, remove them and call TRW for disposition. Do not rebuild the gear.**



SAPH07Z080300129

(10) Remove and discard seal rings (10) and (8) and O-rings (11) and (9) from valve housing (5).

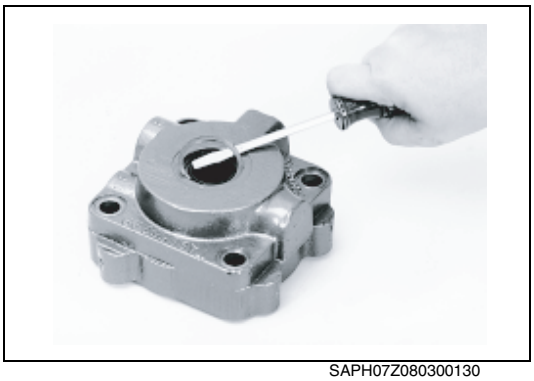
SAPH07Z080300130

(11) Turn over valve housing and remove retaining ring (3).


SAPH07Z080300131

(12) Tap input shaft seal (4) out of valve housing. Discard seal.

**⚠ CAUTION**
**Exercise special care when removing seal (4) to prevent damaging the valve housing seal bore.**

**NOTICE**
**The valve housing also utilizes a ball plug for manufacturing purposes that must not be removed.**

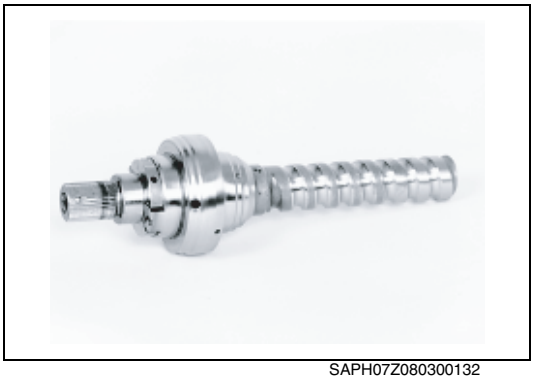
SAPH07Z080300132

(13) Inspect the sealing areas of input shaft and valve (13 or 13A) for nicks and run your fingernail edge across the sealing surfaces to detect steps. Inspect for discoloration from excess heat. Inspect input shaft ball-track grooves for brinelling or spalling. If any of these conditions exist, you must replace the input shaft, valve/worm assembly, valve housing and balls. Also replace rack piston if brinelling or spalling is found.


SAPH07Z080300133

(14) Inspect the thrust bearing (15) rollers for any deterioration. Inspect thrust washers (12 & 16) for brinelling, spalling, or cracks. Replace any part with these conditions.

**Alternate Construction TAS65:** If spacer sleeve (14) is damaged, **replace the input shaft/valve/worm subassembly** and use thick washer and roller bearing only during reassembly.



SAPH07Z080300134

(15) Place valve housing (5) firmly in a vise so the input shaft, valve/worm assembly (13 or 13A) can be assembled vertically with the worm end up.

⚠ **CAUTION**
**Do not clamp against threaded port hole or relief valve hole sealing faces when placing valve housing in vise.**

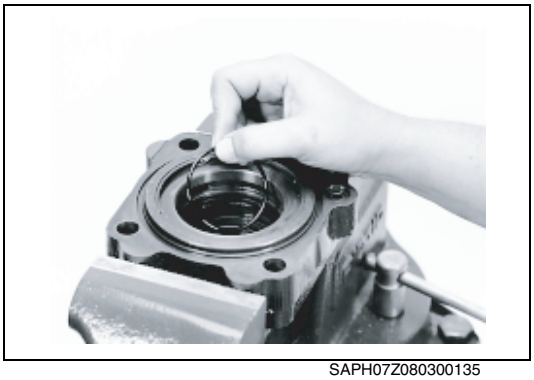
SAPH07Z080300135

(16) Oil and assemble a new O-ring (9) into its counterbore in valve housing.

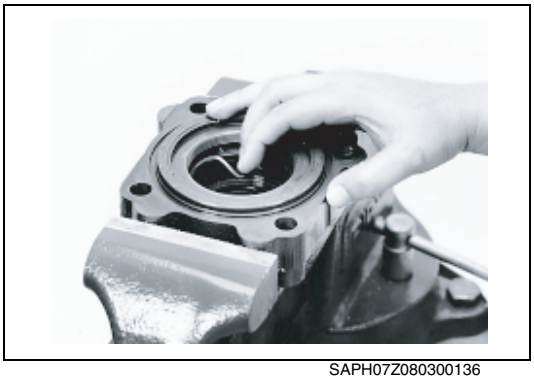
SAPH07Z080300136

(17) Lightly oil and assemble new O-ring (11) and new seal ring (10) into the large diameter seal ring groove in valve housing, bending and working them in and smoothing them out as necessary.


SAPH07Z080300137

(18) Install roller thrust bearing (15) and then the thick washer (12) (square side out) onto input shaft end of input shaft, valve, worm subassembly, seating them against the input shaft thrust face.

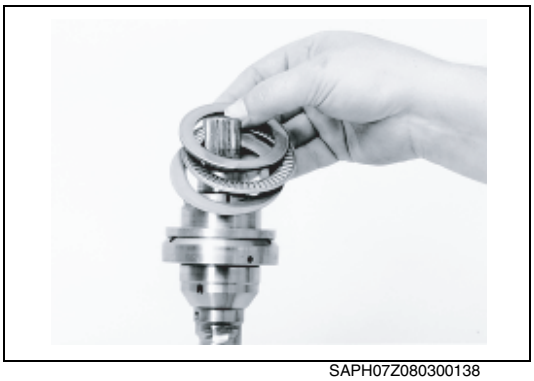
SAPH07Z080300138

(19) **Alternate construction TAS65:** Assemble spacer sleeve (14) onto input shaft with radiused side toward valve. Make sure sleeve is square. Assemble thin washer (16), thrust bearing (15) and thick washer (12) onto input shaft behind spacer sleeve.

⚠ **CAUTION**
**If you are replacing the input shaft/valve/worm assembly, discard spacer sleeve and thin washer.**


SAPH07Z080300139

(20) Lightly oil and assemble new seal ring (8) onto input shaft and against the thick thrust washer (12) to hold the bearing components in place.


SAPH07Z080300140

(21) Dip the input end of the input shaft, valve, worm assembly (13 or 13A) into oil up to the worm lead. Assemble the input shaft end of the assembly into the valve housing (5) until it is firmly seated.

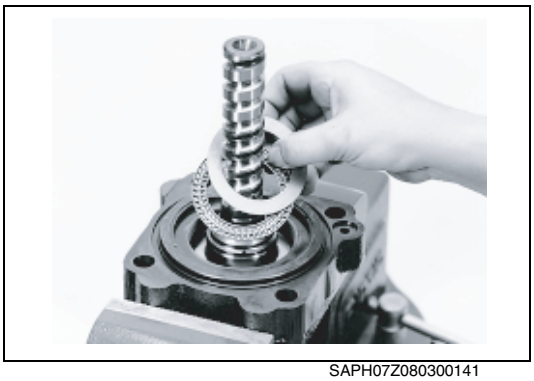
SAPH07Z080300141

(22) Apply oil and assemble the other thrust bearing (15) then the thin thrust washer (16) over the ball groove end of worm, and seat them against the shoulder of input shaft, valve, worm assembly.


SAPH07Z080300142

(23) Lightly oil a new O-ring (9) and assemble into the seal groove in bearing adjuster (17). Oil and work a new seal ring (8) into the same groove and smooth it out.

**NOTICE**

**Be sure the valve housing, adjuster locknut and bearing adjuster threads are clean and free of any staking burrs that would impede the locknut from turning freely on adjuster or the adjuster turning freely in valve housing.**

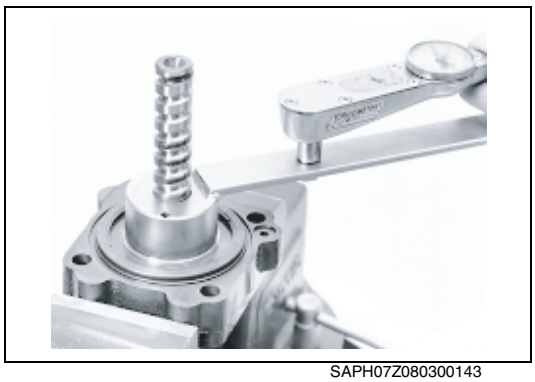
SAPH07Z080300143

(24) Lightly oil and assemble bearing adjuster (17) over worm and into valve housing. Torque adjuster to **13 lbf·ft** (18N·m) indicated torque using a torque wrench inserted in adjuster tool #J37070. This will seat the components. Back off adjuster $^{1}/_{4}$ to $^{1}/_{2}$ of a turn.

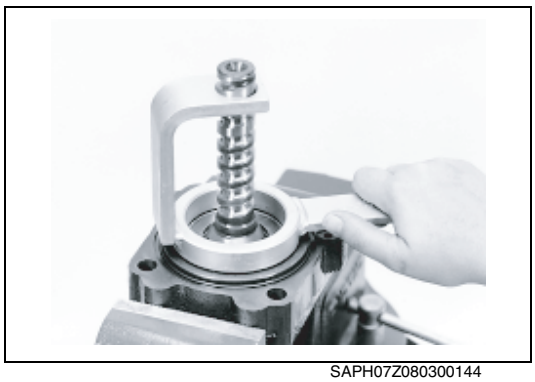
SAPH07Z080300144

(25) Lightly oil and assemble new locknut (18) onto bearing adjuster (17) with radius (slightly rounded) side down. Tighten slightly to keep the bearing adjuster in place.

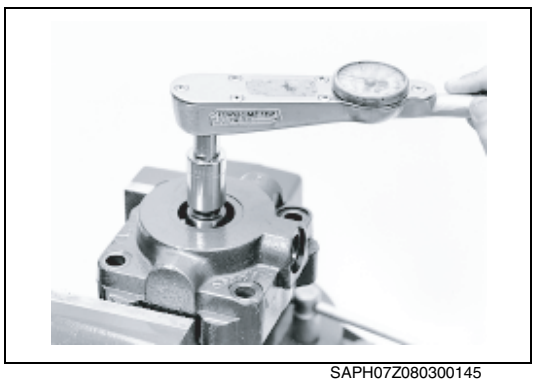
SAPH07Z080300145

(26) Reverse assembly in vise so the worm end is down. With an inch pound torque wrench on the input shaft, note torque required to rotate the input shaft 360° in each direction. Tighten the bearing adjuster to increase the maximum torque at the input shaft **5-10 lbf·in**. (.5-1.0 N·m) over that which was previously noted.

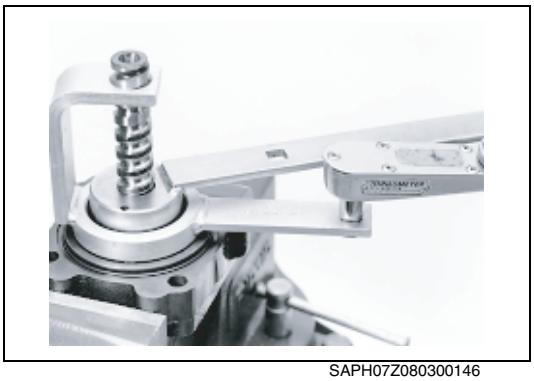
SAPH07Z080300146

(27) Again reverse the assembly in vise. Torque locknut while holding bearing adjuster in position established in step (26) with appropriate adjuster tool. When using a torque wrench in locknut tool J37464, the torque wrench reading should be **112 lbf·ft** (152 N·m).

**NOTICE**

**The bearing adjuster, locknut and valve housing flange should be flush. If not, the seal ring (8) or O-ring (9) may be out of position; which will result in axial lash.**


SAPH07Z080300147

(28) Recheck input shaft torque. It should match torque measured in step (26). Repeat steps (26) and (27) if necessary.

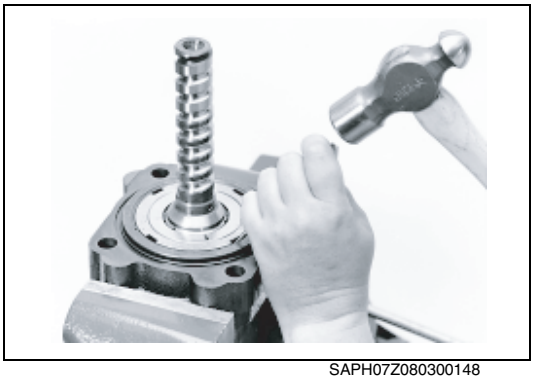
SAPH07Z080300148

(29) Stake valve housing into the clockwise most corner of two opposing slots in locknut (18). Stake the locknut into the adjuster (17) in two places (180° apart) at threaded area. Choose areas that have not been previously staked.

After staking, torque required to rotate input shaft must be between **5-10 lbf·in.** (.5-1.0 N·m) **greater** than the torque noted in step (26). Torque value must **not exceed 22 lbf·in.** (2.5 N·m). Unstake and readjust if necessary.

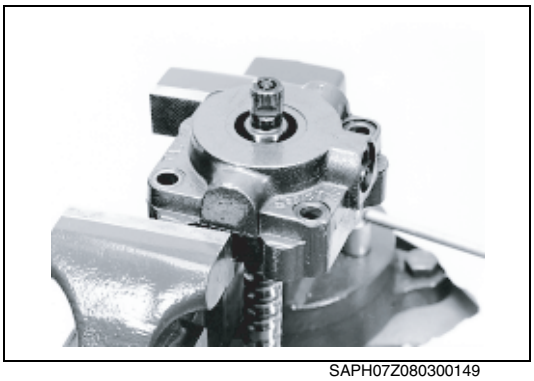
SAPH07Z080300149

(30) Reposition worm screw/valve housing subassembly in soft-jawed vise, clamping tightly against valve housing, so the worm screw is pointing down.


SAPH07Z080300150

(31) Apply clean grease (Exxon Unirex* RS460) to the outside and inside diameters (fill cavity between the lips) of the new input shaft seal (4) and assemble it, garter spring side first over the input shaft. Align seal in the valve housing seal bore.

Assemble seal installer tool #J37073, small diameter end first, over the input shaft and against the seal. Tap the seal installer tool until the tool shoulder is squarely against the valve housing. This will correctly position the seal in the housing bore just beyond the retaining ring groove.

Remove any seal material that may have sheared off and is in seal bore and retaining ring groove.

**⚠ CAUTION**
**The input shaft seal must be square in the seal bore and installed to the correct depth.**

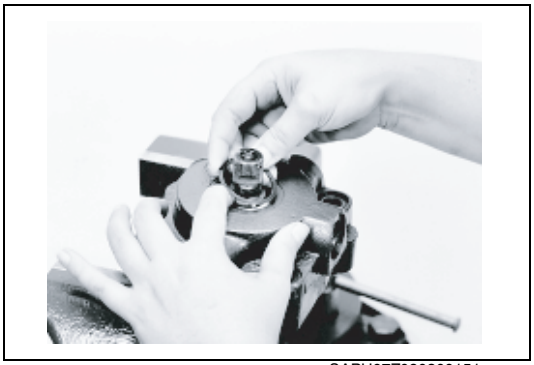
SAPH07Z080300151

(32) Insert new retaining ring (3) into its groove in valve housing.

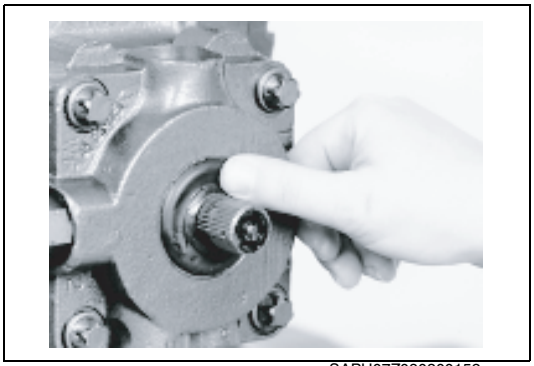
SAPH07Z080300152

(33) Pack the end of the valve housing bore around the input shaft with clean, high temperature industrial grease, Exxon Unirex* RS460. Apply more of the grease to the inside of a new dirt and water seal (2, 2B or 2C) and install it over the input shaft. Seat the seal in the groove behind the serrations and against the valve housing.

*Trademark of Exxon Oil Corp.


SAPH07Z080300153

**8. ROLLER BEARING REPLACEMENT-STEP BORE**

(1) If roller bearing (37) in housing needs to be replaced, place the bearing removal end (long end) of the bearing and seal tool against the trunnion end of the bearing and press it out of the side cover end of the bearing bore. Discard bearing.


SAPH07Z080300154

(2) Press the roller bearing (37) into the housing from the side cover end of the bearing bore until it is seated against the step bore. Be sure the housing is square with the press base and the bearing is not cocked.

**⚠ CAUTION**
**Use the bearing installation end of the tool (short end). If the bearing removal end of the bearing & seal tool is used to press in bearing, the cage on the new bearing may be damaged.**

**NOTICE**
**If the unmachined trunnion face is not square, use shims to square it before pressing in the bearing.**

Return to step (30), page SR03-30.

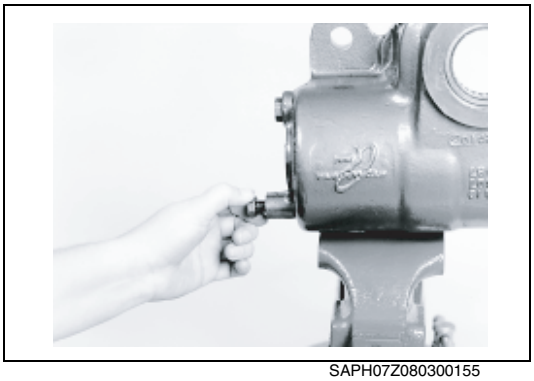
SAPH07Z080300155

**9. REPLACE HOUSING PORTS, PLUGS, SCREWS, FITTINGS**

(1) If damaged, remove and replace the poppet fixed stop screw (52 or 52A) and washer (53) if equipped. Replace with poppet fixed stop screw (52A), discard the washer. Torque to **48 lbf·ft** (65 N·m).

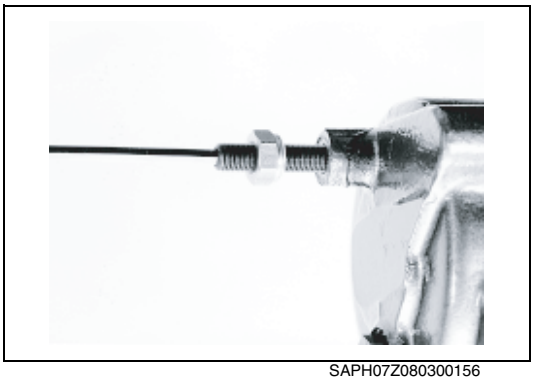
SAPH07Z080300156

(2) If damaged, remove poppet adjusting screw (59) and sealing nut (60) without allowing the nut to change its position on the screw.

Assemble the new nut onto the new adjusting screw, matching its position to the nut and screw removed. Torque sealing nut to **35 lbf·ft** (47 N·m).

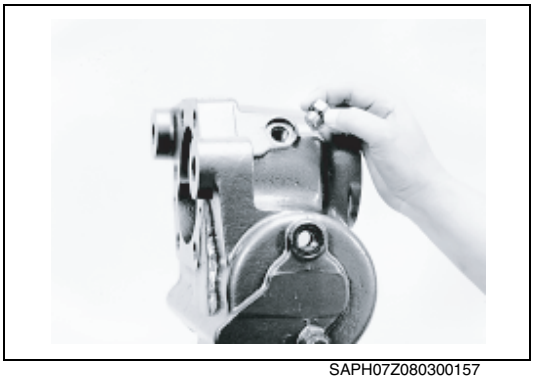
SAPH07Z080300157

(3) If damaged, remove and replace automatic bleed plug (51). Torque to **48 lbf·ft** (65 N·m).

If damaged, remove and replace permanent auxiliary port plugs (54) and O-rings (55). Assemble new O-rings (55) on port plugs and torque to their respective ports in the housing or valve housing to **30 lbf·ft** (41 N·m).

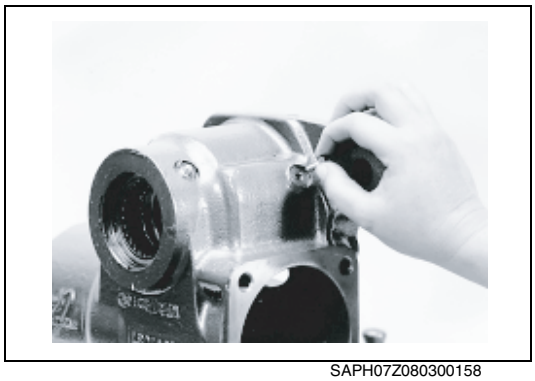
SAPH07Z080300158

(4) If damaged, remove and replace manual bleed screw (50). Torque to **45 lbf·in.** (3.4 N·m).

**Return to inspection section, page SR03-31.**

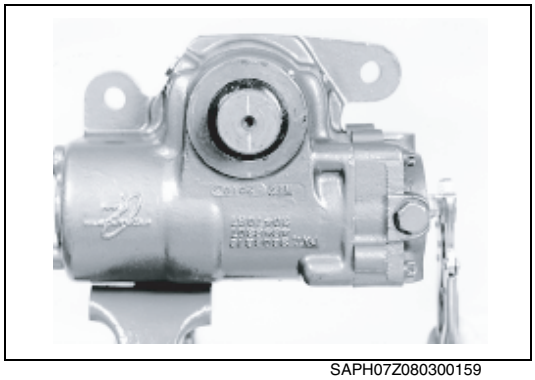
SAPH07Z080300159

**10. FINAL ADJUSTMENTS**

(1) To center the steering gear, rotate input shaft, valve worm assembly (13 or 13A) until the timing mark on the end of the sector shaft (42) is in line with the timing mark on the end of housing trunnion.

**⚠ CAUTION**

**Do not rotate the input shaft more than 1.5 revolutions from center position until the steering gear is installed, during poppet setting procedure. Doing so could make the automatic poppets inoperative, which would require disassembly of steering gear to reposition poppet seat and sleeve assemblies.**

**NOTICE**

- **Initial poppet contact will occur at less than one input shaft rotation in one direction from steering gear center position, if new or reset poppet adjuster seat and sleeve assemblies are assembled in the unit.**
- **Worm preload adjustment was set when input shaft, valve and worm were assembled into valve housing.**

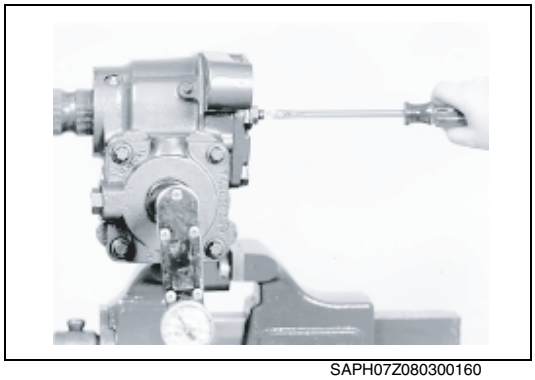
SAPH07Z080300160

(2) With adjusting screw jam nut (47) loose, turn sector shaft adjusting screw (43) clockwise to provide 45-50 lbf·in. (5-5.5 N·m) of torque required to rotate the input shaft, valve/worm assembly (13 or 13A) through one half turn (180°) each side of center.

**NOTICE**

**This procedure will properly mesh and seat the rack piston and sector shaft teeth for final adjustments.**

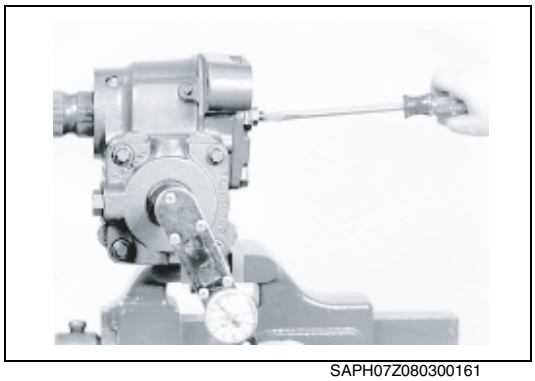
SAPH07Z080300161

(3) Turn sector shaft adjusting screw (43) counterclockwise one half turn and **note maximum torque** required to rotate the input shaft, valve/worm assembly through one half turn (180°) each side of center.

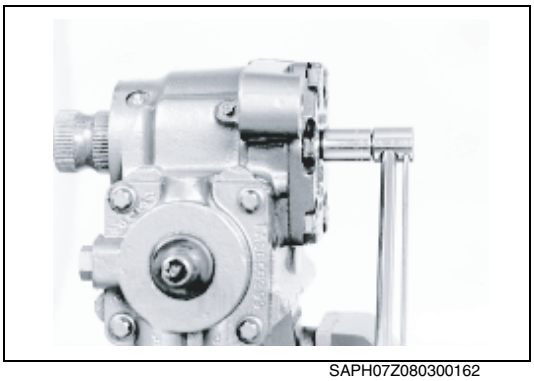

SAPH07Z080300162

(4) Adjust sector shaft adjusting screw (43) clockwise **to increase** maximum torque noted in step (3) by **7 lbf·in.** (.8 N·m). Tighten jam nut (47) firmly against side cover while holding the adjusting screw in position. **Final torque jam nut to 43 lbf·ft** (58 N·m) and check input shaft, valve/worm assembly torque again. Readjust if input shaft torque exceeds 40 lbf·in. (4.5 N·m).

# POWER STEERING PUMP

## DATA AND SPECIFICATIONS

EN07Z0803I200002

| | |
|---|---|
| **Type** | **Vane type** |
| **Relief pressure** | **14.0-14.7 MPa {142.76-149.89 kgf/cm$^2$, 2030.54-2132.05 lbf/in$^2$}** |
| **Flow rate** | **14.9-18.9 L/min {3.94-4.99 U.S. gal}** |

## DESCRIPTION

EN07Z0803C100004

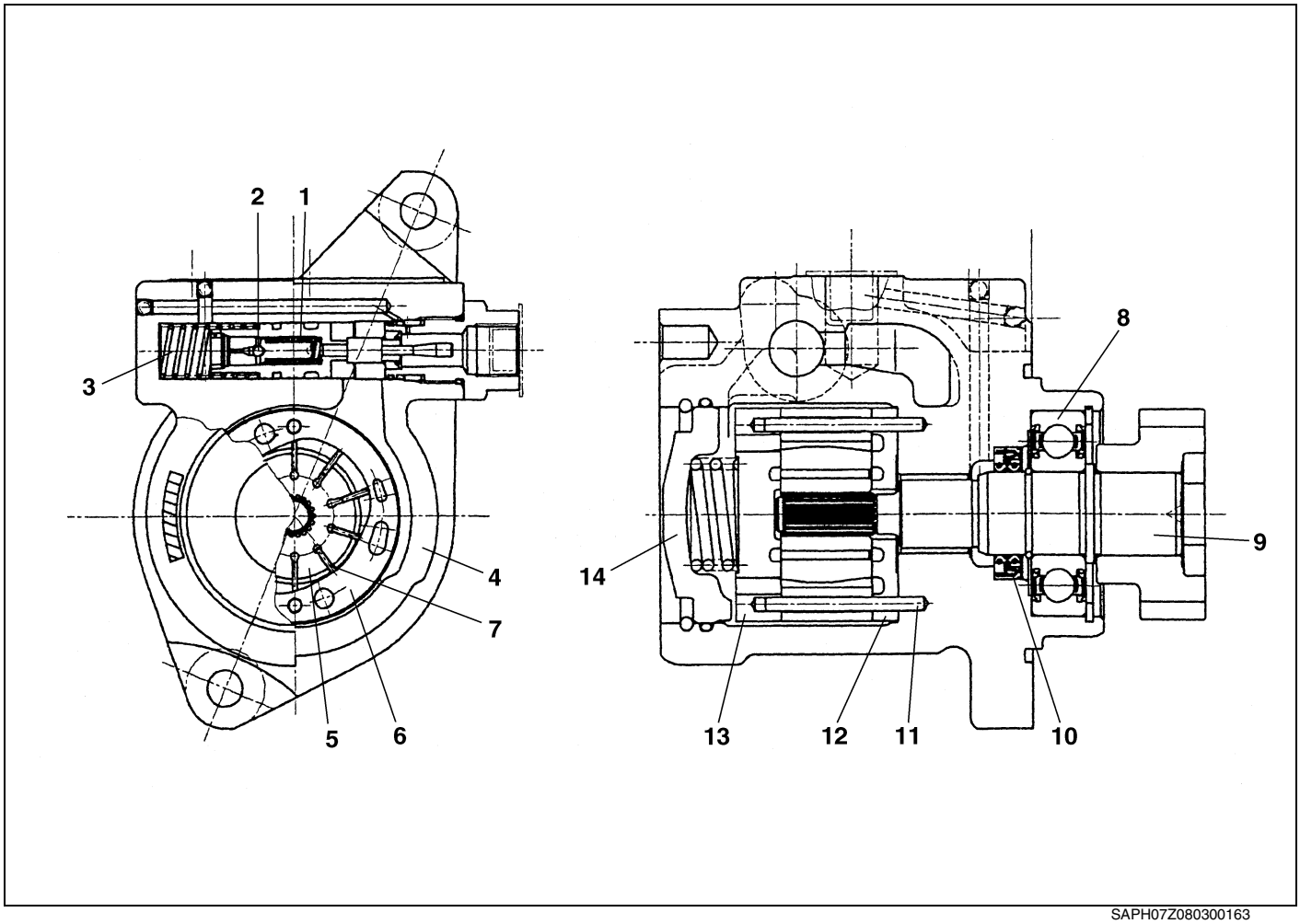


SAPH07Z080300163

| | | | |
|---|---|---|---|
| 1 | Flow control valve assembly | 8 | Ball bearing |
| 2 | Relief valve | 9 | Pump shaft |
| 3 | Spring | 10 | Oil seal |
| 4 | Pump body | 11 | Dowel |
| 5 | Rotor | 12 | Front plate |
| 6 | Cam ring | 13 | Rear plate |
| 7 | Vane | 14 | Pump cover |

# OPERATION

EN07Z0803C100005

**Neutral (Flow control valve assembly and relief valve are not operating)**

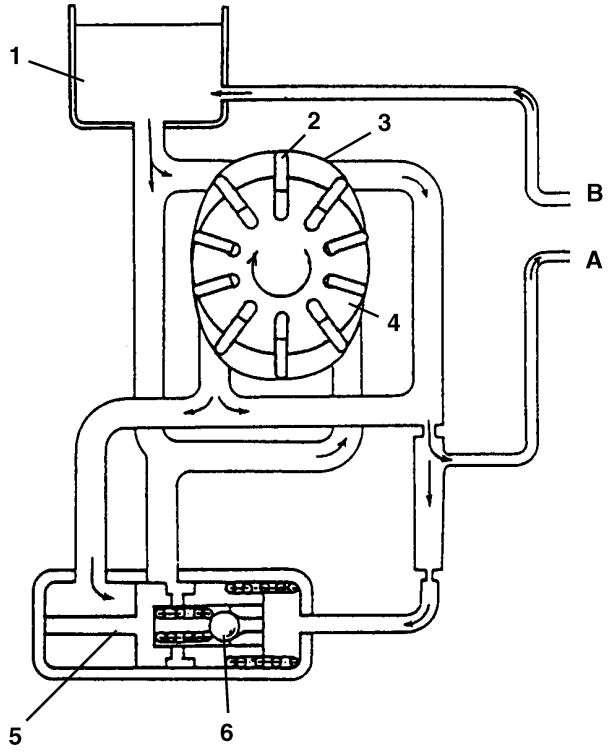


**Relief valve operation**

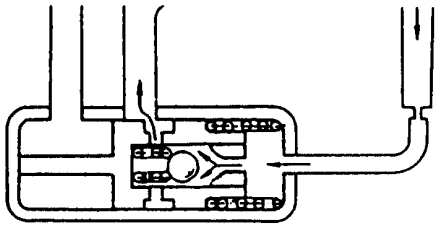

**Flow control valve operation**

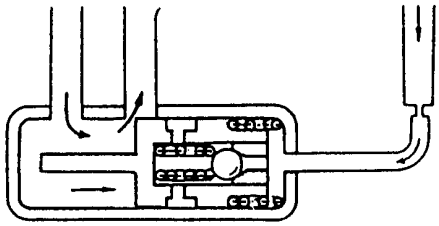

SAPH07Z080300164

| | | | |
|---|---|---|---|
| 1 | Oil reservoir | 5 | Flow control valve assembly |
| 2 | Vane | 6 | Relief valve |
| 3 | Cam ring | A | To power steering gear unit |
| 4 | Rotor | B | From power steering gear unit |

# COMPONENT LOCATOR

EN07Z0803D100002

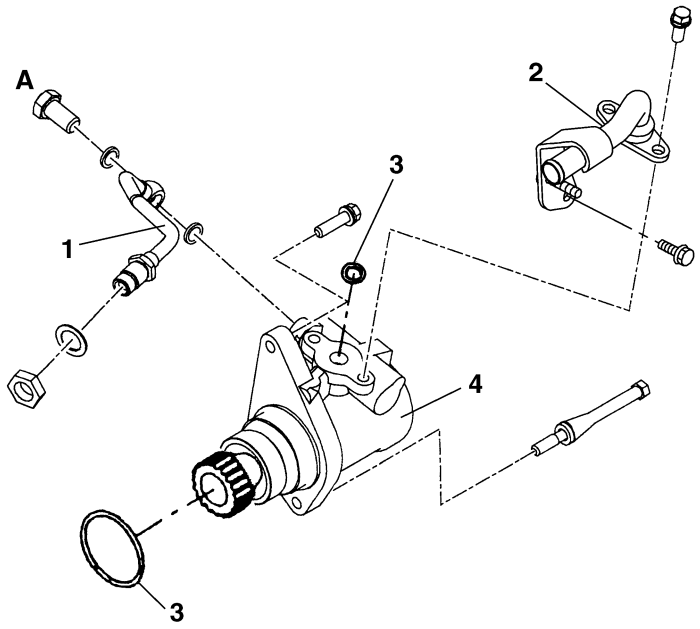


SAPH07Z080300165

| | | | |
|---|---|---|---|
| 1 | Feed pipe | 3 | O-ring |
| 2 | Power steering pipe | 4 | Power steering pump |

**Tightening torque** **Unit: N·m {kgf·cm, lbf·ft}**

| | | | |
|---|---|---|---|
| A | 71-92 {724-938, 53-67} | | |

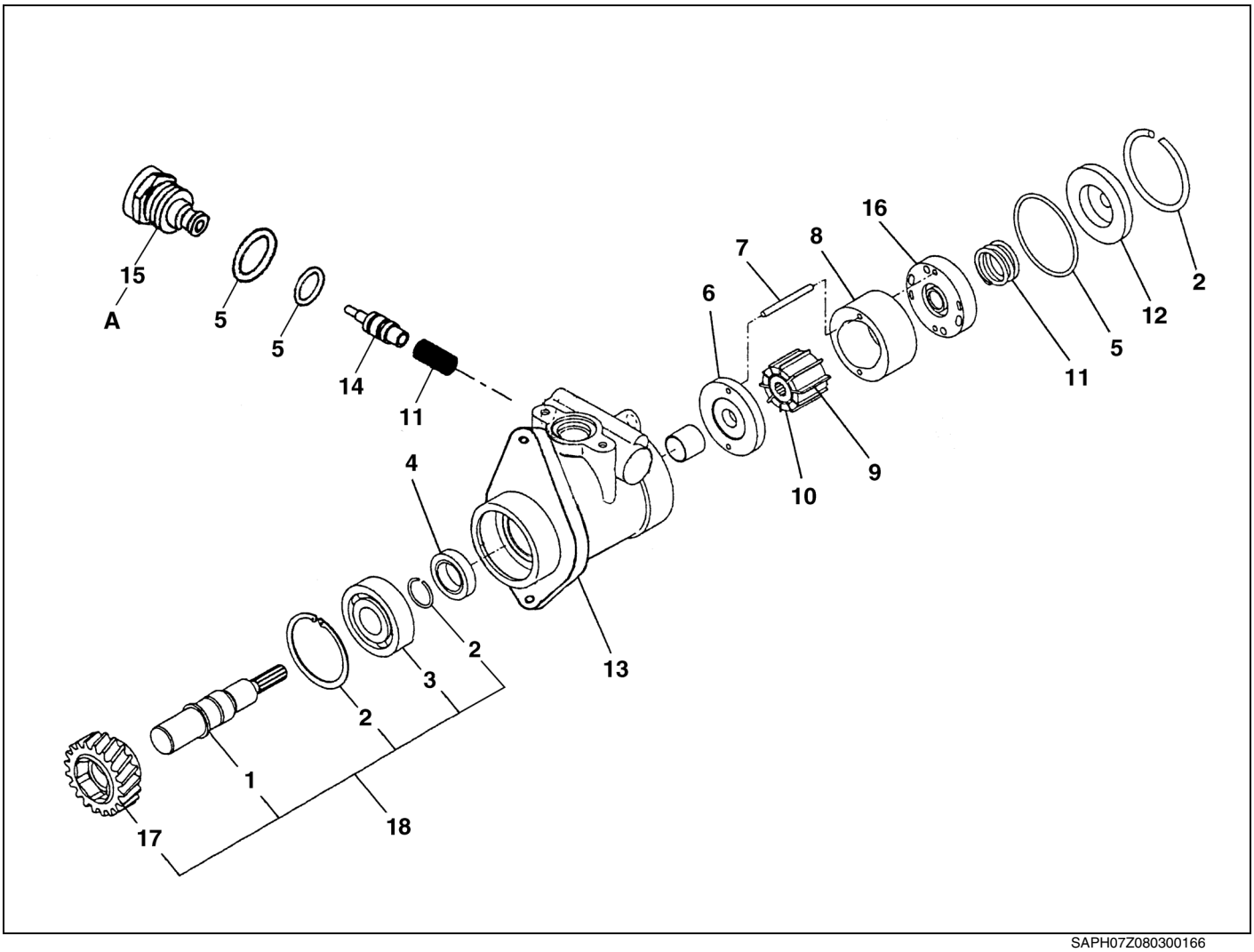


SAPH07Z080300166

| | | | |
|---|---|---|---|
| 1 | Pump shaft | 10 | Rotor |
| 2 | Retainer ring | 11 | Spring |
| 3 | Ball bearing | 12 | Pump cover |
| 4 | Oil seal | 13 | Pump body |
| 5 | O-ring | 14 | Flow control valve assembly |
| 6 | Front plate | 15 | Connector |
| 7 | Dowel | 16 | Rear plate |
| 8 | Cam ring | 17 | Drive gear |
| 9 | Vane | 18 | Shaft sub-assembly |

**Tightening torque** **Unit: N·m {kgf·cm, lbf·ft}**

| | | |
|---|---|---|
| A | 108-127 {1,100-1,300, 80-93} | |

# OVERHAUL

EN07Z0803H200001

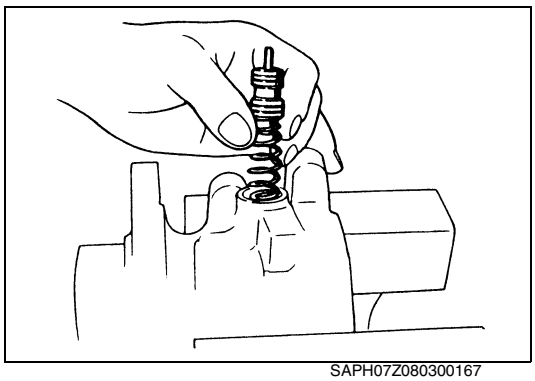
SAPH07Z080300167

## IMPORTANT POINTS - DISASSEMBLY

**1. REMOVE THE FLOW CONTROL VALVE ASSEMBLY.**
(1) Remove the connector, flow control valve assembly and spring.

**NOTICE**
**Be careful not to drop, scratch or nick the flow control valve assembly.**

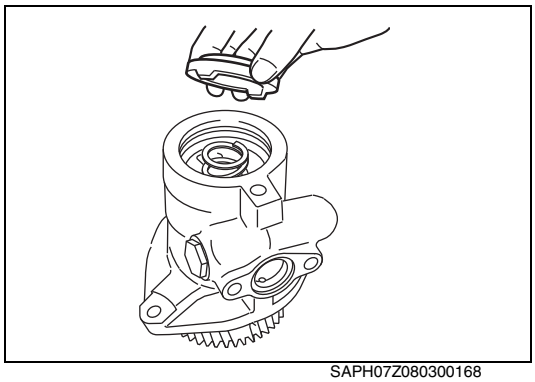
SAPH07Z080300168

**2. REMOVE THE BODY COVER.**
(1) Remove the retainer ring.
(2) Remove the pump cover and spring.

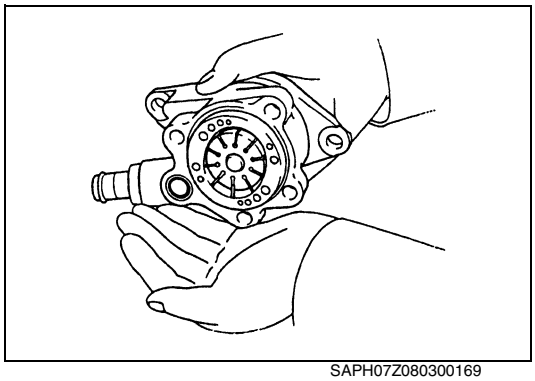
SAPH07Z080300169

**3. REMOVE THE VANE PUMP CORE.**
(1) As shown in the figure, face the vane pump core side downward and remove the rear plate and vane pump core. The vane pump core consists of the cam ring, rotor and vane. Since dimensional checks of these parts have been completed, handle the vane pump core carefully. Remove the front plate.

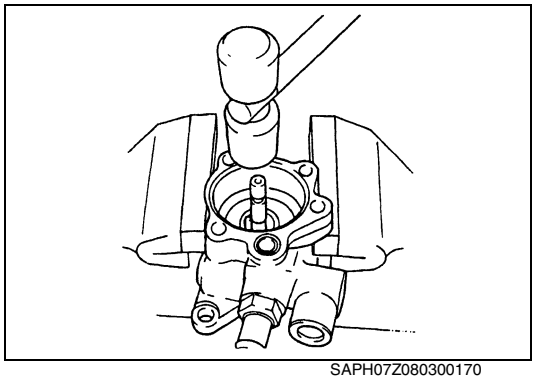
SAPH07Z080300170

**4. REMOVE THE PUMP SHAFT ASSEMBLY.**
(1) Remove the retainer ring (Drive gear side) from the pump body, and push and remove the spline edge surface of the pump shaft by hand or by using a plastic hammer. Be careful not to damage the oil seal lip. This process completes disassembly. Carry out inspection.

## REPLACEMENT

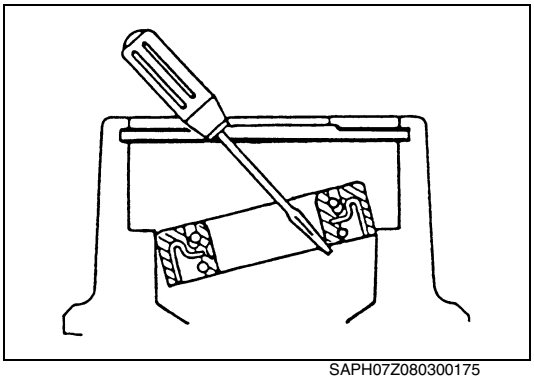

SAPH07Z080300175

**1. REPLACE THE OIL SEAL, IF NECESSARY.**

(1) Use a screw driver to remove the oil seal.

**NOTICE**

**Do not scrape or damage the inside of pump body.**

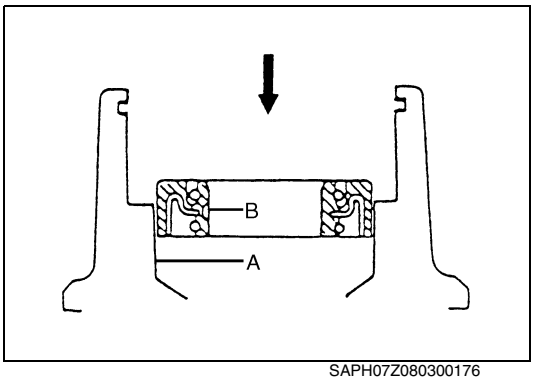


SAPH07Z080300176

(2) Insert the oil seal as shown in the figure.

**NOTICE**

**To prevent oil leakage from oil seal due to lip wear, apply lithium base grease to A and B.**

(3) Using a press, press in the oil seal into the pump body.

## IMPORTANT POINTS - ASSEMBLY

**NOTICE**

- **Before assembling, clean all the parts and lubricate them with fluid.**
- **When assembling the power steering pump, be sure to use new O-rings.**

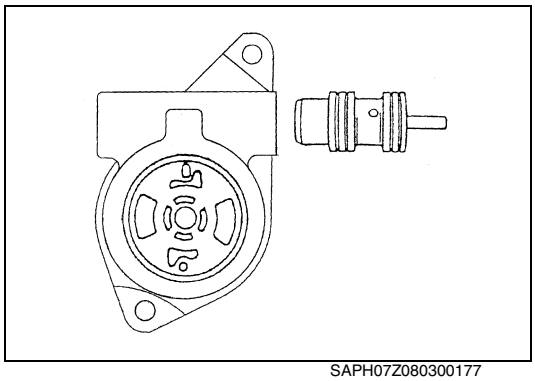

SAPH07Z080300177

**1. INSTALL THE FLOW CONTROL VALVE ASSEMBLY.**

(1) Apply fluid to the valve and check to see that it falls smoothly into the valve hole by its own weight.
If a problem is detected, replace the flow control valve assembly.

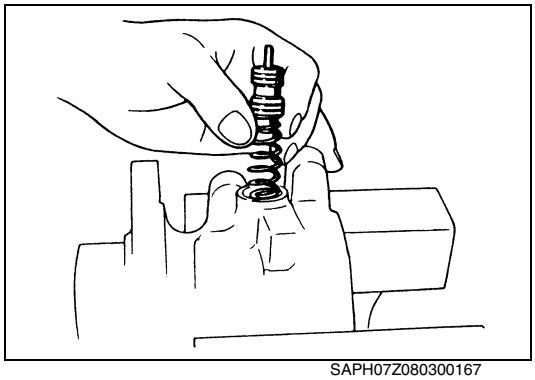

SAPH07Z080300167

(2) Install the spring, flow control valve assembly and tighten the connector.

**NOTICE**

**Apply lithium base grease to O-ring.**

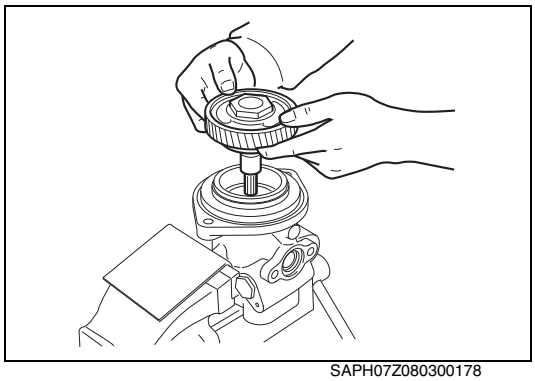

SAPH07Z080300178

**2. INSTALL THE PUMP SHAFT.**

(1) Using a press, press in the pump shaft with bearing into the pump body.

(2) Install the retainer ring.

**NOTICE**

**When installing the retainer ring, chamfer side face toward ball bearing.**

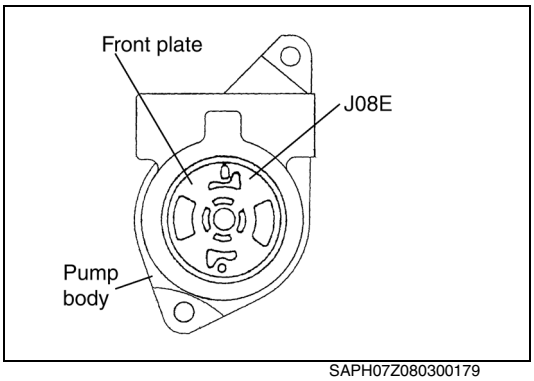

SAPH07Z080300179

**3. INSTALL THE FRONT PLATE.**

(1) Insert the front plate into the pump body as shown in figure.

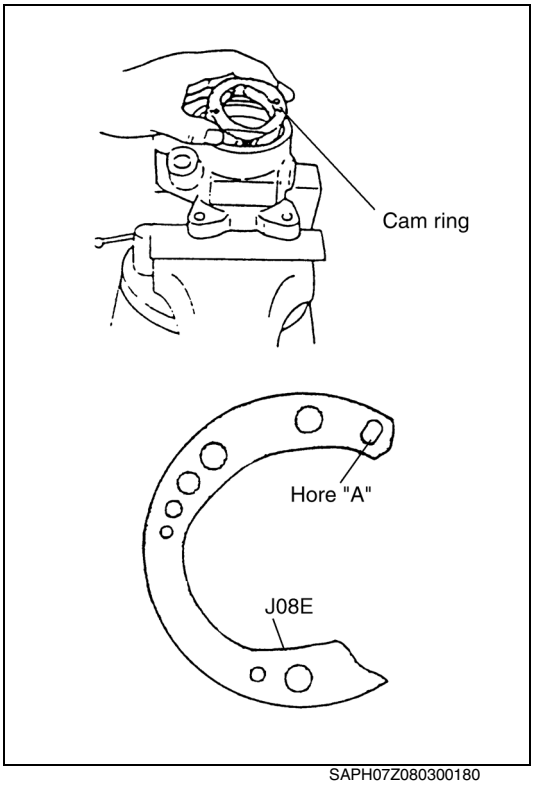

SAPH07Z080300180

**4. INSTALL THE CAM RING.**

(1) Insert the cam ring with hole "A" aligned with dowel.

**NOTICE**

**At this time, make sure that the hole "A" in the side surface is positioned toward the ball bearing.**

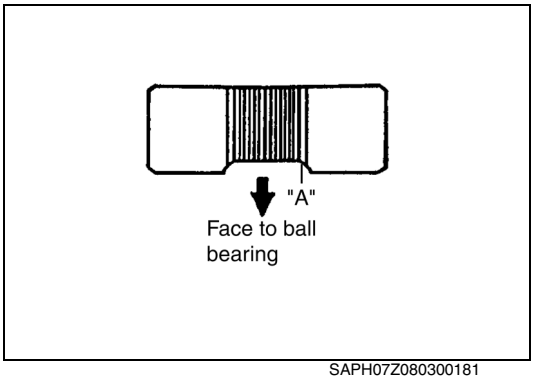

SAPH07Z080300181

**5. INSTALL THE ROTOR AND VANE.**

(1) Insert the rotor with the cut spline "A" side facing toward the ball bearing.

(2) Insert the vanes with the rounded part facing outward.

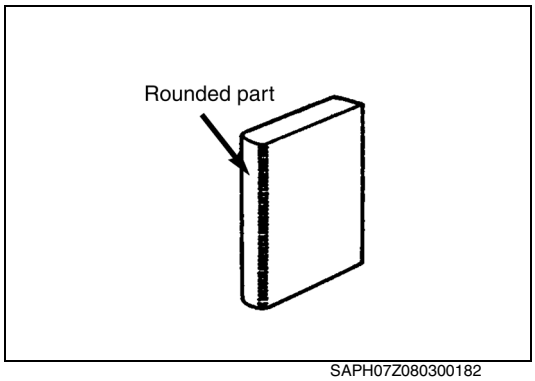

SAPH07Z080300182

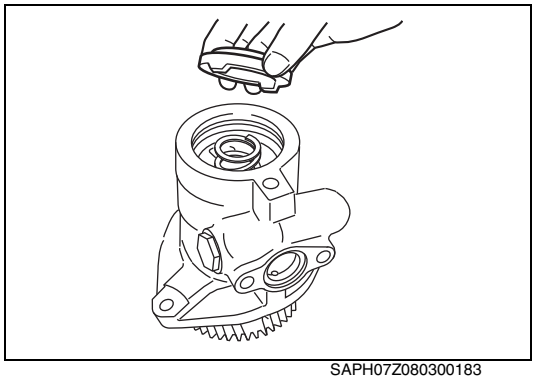
SAPH07Z080300183

**6. INSTALL THE REAR PLATE, SPRING, O-RING AND PUMP COVER.**

(1) Insert the rear plate on the cam ring and put the spring on the rear plate.

(2) Insert the O-ring into the groove of the pump body.

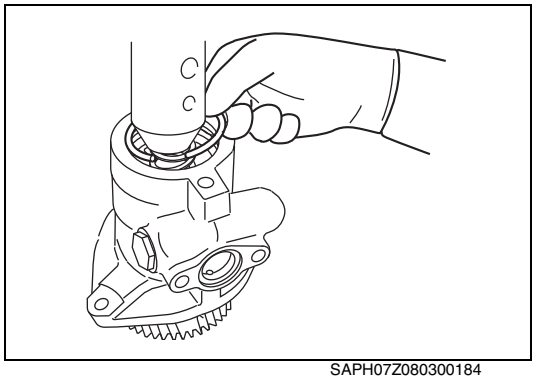
SAPH07Z080300184

(3) Using a press, press in the pump cover and then install the retainer ring securely.

**NOTICE**

- **Be careful to see that the O-ring is not pinched by the rear cover.**
- **With the pump cover pressed in completely, fit the retainer ring to pump body.**
- **Check to see that the pump shaft rotates smoothly.**

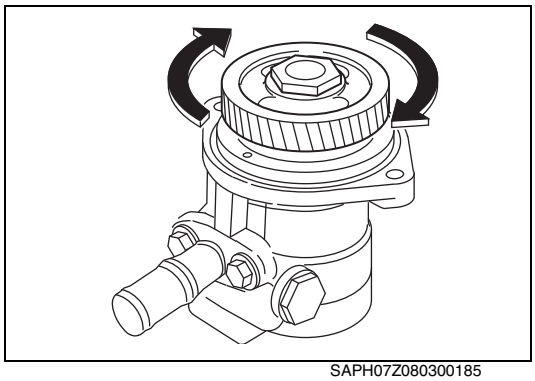
SAPH07Z080300185

# INSPECTION AND REPAIR

EN07Z0803H300002

**Unit: mm {in.}**

| Inspection item | Standard | Limit | Remedy | Inspection procedure |
|---|---|---|---|---|
| **Shaft:<br>Damage** | — | — | **Replace,<br>if necessary.** | **Visual check**<br> 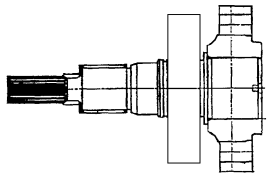 |
| **Side plate:<br>Abrasion and flaw** | — | — | **Replace,<br>if necessary.** | **Visual check**<br> 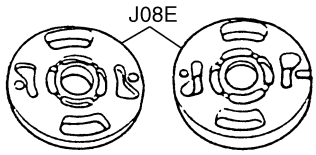 |
| **Flow control valve assembly:<br>Wear and damage** | — | — | **Replace,<br>if necessary.** | **Visual check**<br> 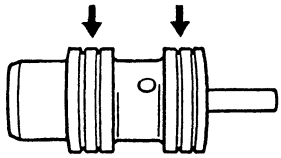 |
| **Ball bearing:<br>Scratched and damage** | — | — | **Replace,<br>if necessary.** | **Visual check**<br> 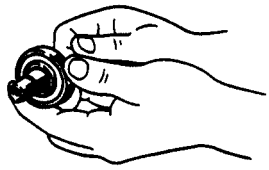 |
| **Cam ring inner surface:<br>Rotor surface:<br>Vane surface:<br>Wear, scratches and scoring** | — | — | **Replace,<br>if necessary.** | **Visual check**<br> 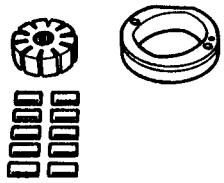 |
| **Oil seal:<br>Wear and damage** | — | — | **Replace,<br>if necessary.** | **Visual check**<br> 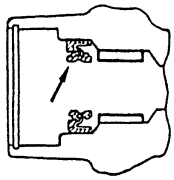 |

| Inspection item | Standard | Limit | Remedy | Inspection procedure |
|---|---|---|---|---|
| **Bushing:**<br>**Scratched and damage** | **—** | **—** | **Replace the pump body, if necessary.** | **Visual check**<br> 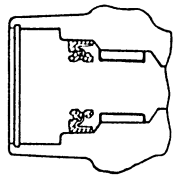 |

# FRONT AXLE (MFS)

AX02-001

**FRONT AXLE (MFS)..... AX02-2**
DATA AND SPECIFICATIONS ..... AX02-2
TROUBLESHOOTING..... AX02-4
COMPONENT LOCATOR..... AX02-6
SERVICE NOTES ..... AX02-10
SPECIAL TOOLS..... AX02-11
INTRODUCTION ..... AX02-16
INSPECTION..... AX02-17
DISASSEMBLY ..... AX02-23
PREPARE PARTS FOR ASSEMBLY ..... AX02-30
ASSEMBLY ..... AX02-38
ADJUSTMENT..... AX02-50
LUBRICATION AND MAINTENANCE ..... AX02-59
MAINTENANCE..... AX02-63

# FRONT AXLE (MFS)

## DATA AND SPECIFICATIONS

EN08Z0602I200001

| Vehicle Model | | | HINO 238, 258, 268 (NE8J) | HINO 238, 258, 268 (NE8J) | HINO 258, 268 (NJ8J, NV8J) | HINO 338 (NF8J) | HINO 338, 358 (NV8J, NH8J) | HINO 338, 358 (NV8J, NH8J) |
|---|---|---|---|---|---|---|---|---|
| Front axle series No. | | | MFS-8 | MFS-10 | MFS-10 | MFS-12 | MFS-12 | MFS-14 |
| Axle beam type | | | Reversed Elliot "I" beam | Reversed Elliot "I" beam | Reversed Elliot "I" beam | Reversed Elliot "I" beam | Reversed Elliot "I" beam | Reversed Elliot "I" beam |
| Axle beam material | | | As rolled normalized steels | As rolled normalized steels | As rolled normalized steels | As rolled normalized steels | As rolled normalized steels | As rolled normalized steels |
| Brake disc or drum location | | | Inboard | Inboard | Outboard | Inboard | Outboard | Outboard |
| Wheel bearing | | | Two tapered roller bearings | Two tapered roller bearings | Two tapered roller bearings | Two tapered roller bearings | Two tapered roller bearings | Two tapered roller bearings |
| Lubrication of wheel bearing (Amount of grease or oil in a hub as shown, below) | | | Oil | Oil | Oil | Oil | Oil | Oil |
| King pin thrust bearing | | | tapered roller bearing | tapered roller bearing | tapered roller bearing | tapered roller bearing | tapered roller bearing | tapered roller bearing |
| Wheel alignment | Camber | (deg) | 0.25 | 0.25 | 0.25 | 0.25 | 0.25 | 0.25 |
| | King pin angle | (deg) | 9.25 | 6.25 | 6.25 | 6.25 | 6.25 | 6.25 |
| | Caster | (deg) | 3.5 | 3.5 | 3.5 | 3.5 | 3.5 | 3.5 |
| | Toe-in | (mm) | 1.0-3.0 | 1.5-3.5 | 1.5-3.5 | 1.5-3.5 | 1.5-3.5 | 1.5-3.5 |
| Knuckle turning | Inner turn | (deg) | 51 | 51 | 51 | 51 | 51 | 50 |
| | Outer turn | (deg) | 36.8 | 37.6 | 37.6 | 37.6 | 37.6 | 37.2 |

## IDENTIFICATION

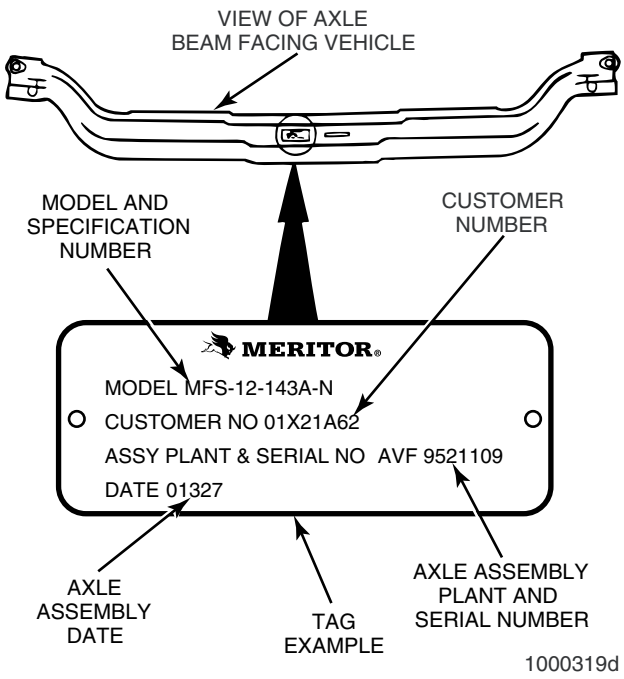


SAPH08Z060200001

| KPI (inches) | Drop (inches) | KPI (inches) | Drop (inches) |
|---|---|---|---|
| 13 = 68.0 | 3.74 | 53 = 72.0 | 3.74 |
| 16 = 68.0 | 3.60 | 55 = 75.75 | 6.5 |
| 21 = 69.0 | 3.30 | 62 = 65.24 | 3.74 |
| 22 = 69.0 | 3.50 | 63 = 65.25 | 3.74 |
| 23 = 69.0 | 3.5/2.0 | 75 = 60.0 | 2.50 |
| 24 = 69.0 | 5.00 | 85 = 67.5 | 2.50 |
| 33 = 71.0 | 3.74 | 86 = 67.5 | 3.60 |
| 40 = 71.5 | 4.65 | 92 = 68.5 | 3.50 |
| 43 = 71.5 | 3.74 | 94 = 68.5 | 5.00 |
| 44 = 71.5 | 5.00 | | |
| 51 = 72.0 | 3.30 | | |

**Hub, Tie Rod Arm, Brake Attachment Variation**
- A = Conventional, Non-Integral Tie Rod Arm, Non-Integral Brake
- B = Conventional, Integral Tie Rod Arm, Non-Integral Brake
- C = Conventional, Integral Tie Rod Arm, Integral Disc Brake
- D = Unitized 65 mm, Integral Tie Rod Arm, Integral Drum Brake
- E = Conventional, Integral Tie Rod Arm, Integral Drum Brake
- F = Unitized 60 mm, Non-Integral Tie Rod Arm, Non-Integral Brake
- G = Unitized 60 mm, Integral Tie Rod Arm, Integral Drum Brake
- H = Unitized 60 mm, Integral Tie Rod Arm, Integral Disc Brake

**Manufacturing Location**
- N = N.A.
- S = S.A.
- E = Europe
- A = Australia/Asia

**M F S - XX - 0 0 0 X - N X XXX**

**M = Meritor**

**F = Front**

**S = Non-Drive Steer Axle**

**GAWR Pounds or Tonnes Ref: Target Market**

**Beam, King Pin, Bushing Variation**
- 1 = Forged I-Beam, Straight King Pins - Non-Metallic Bushings
- 2 = Forged I-Beam, Tapered King Pins - Needle Bearings
- 4 = Forged I-Beam, Straight King Pins - Bronze Bushings
- 5 = Forged I-Beam, Straight King Pins - Needle Bearings
- 6 = Formed Beam, Straight King Pins - Non-Metallic Bushings

**Axle Spec. Number**

**Brake Type**
- B = "B" Frame Brake
- C = Air Disc Brake
- D = Wedge Brake (Dual Air Chambers)
- E = Wedge Brake (Dual Hydraulic Cylinders)
- F = Wedge Brake (Single Hydraulic Cylinder)
- G = DuraPark® Hydraulic Drum
- H = Quadraulic™ Disc
- K = DiscPlus™ Air Disc
- L = Q Plus™ Cam Brake
- N = None
- P = "P" Series Cam Brake
- Q = "Q" Series Cam Brake
- R = Cast Plus™ Brake
- S = Wedge Brake (Single Air Chamber)
- T = "T" Series Cam Brake
- W = "W" Series Cam Brake
- Z = Non-Meritor Brake

SAPH08Z060200002

# TROUBLESHOOTING

EN08Z0602F300001

## FRONT NON-DRIVE STEER AXLE DIAGNOSTIC TABLE

| Condition | Cause | Correction |
|---|---|---|
| Tire wear out quickly or have uneven tire tread wear. | Tire have incorrect air pressure. | Place specified air pressure in tires. |
| | Tire out-of-balance. | Balance or replace tires. |
| | Incorrect tandem axle alignment. | Align tandem axles. |
| | Incorrect toe-in setting. | Adjust toe-in specified setting. |
| | Incorrect steering arm geometry. | Service steering system as necessary. |
| | Excessive wheel end play exists. | Readjust wheel bearing. |
| Vehicle is hard to steer. | Power steering system pressure low. | Repair power steering system. |
| | Steering gear linkage not assembled correctly. | Assemble steering gear correctly. |
| | Steering linkage needs lubrication. | Lubricate steering linkage. |
| | King pins binding. | Replace king pins. |
| | Incorrect steering arm geometry. | Service steering system as necessary. |
| | Caster out-of-adjustment. | Adjust caster as necessary. |
| | Tie rod ends hard to move. | Replace tie rod ends. |
| | Worn thrust bearing. | Replace thrust bearing. |
| Tie rod ends are worn and require replacement. | Tie rod ends require lubrication. | Lubricate ends of cross tube. Make sure lubrication schedule is followed. |
| | Severe operating conditions. | Increase frequency of inspection and lubrication intervals. |
| | Damaged boot on tie rod end. | Replace boot. |

SAPH08Z060200003

| Condition | Cause | Correction |
|---|---|---|
| Bent or broken cross tube, tie rod end ball stud, steering arm or tie rod end. Component requires replacement. | Too much pressure in the power steering system, pressure exceeds vehicle manufacturer's specification. | Adjust power steering system to specified pressure. |
| | Power steering system cut-off pressure, out of adjustment. | Adjust power steering system to specified pressure. |
| | Vehicle operated under severe conditions. | Verify that vehicle is operated correctly. |
| | Add-on type of power steering system not installed correctly. | Correctly install add-on power steering system. |
| | Steering gear overtravel poppets incorrectly set or malfunctioning. | Check for correct operation or adjust overtravel of poppets to vehicle manufacturer's specifications. |
| | Axle stops incorrectly set. | Set axle stops to vehicle manufacturer's specification. |
| Worn or broken steering ball stud. | Drag link fasteners tightened higher than vehicle manufacturer specified. | Tighten drag link fasteners to vehicle manufacturer's specified torque. |
| | Lack of lubrication or incorrect lubricant. | Lubricate linkage with specified lubricant. |
| | Power steering stops out-of-adjustment. | Adjust stops to specified dimension. |
| Worn king pins and king pin bushings. | Worn or missing seals and gaskets. | Replace seals and gaskets. |
| | Incorrect lubricant. | Lubricate axle with specified lubricant. |
| | Axle not lubricated at scheduled frequency. | Lubricate axle at scheduled frequency. |
| | Incorrect lubrication procedures. | Use correct lubrication procedures. |
| | Lubrication schedule does not match operating conditions. | Change lubrication schedule to match operating conditions. |
| Vibration or shimmy of front axle during operation. | Caster out-of-adjustment. | Adjust caster. |
| | Wheels and/or tires out-of-balance. | Balance or replace wheels and/or tires. |
| | Worn shock absorbers. | Replace shock absorbers. |

SAPH08Z060200004

# COMPONENT LOCATOR

EN08Z0602D100001

## 1. AXLE WITH A CONVENTIONAL WHEEL END

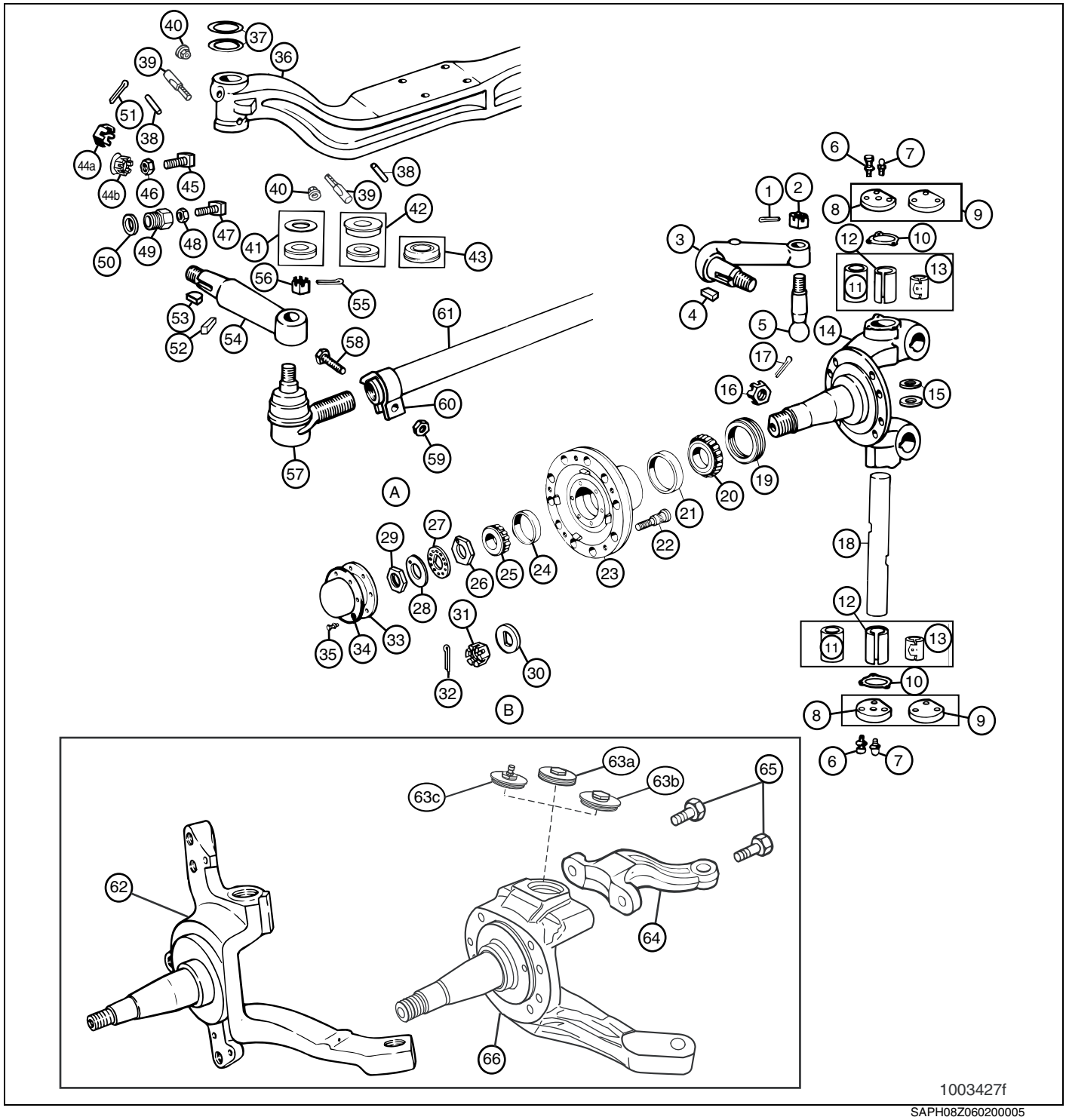


SAPH08Z060200005

| | |
|---|---|
| A | Double Nut |
| B | Single Nut |
| 1 | Cotter Pin |
| 2 | Drag Link-to-Steering Arm Castle Nut |
| 3 | Steering Arm |
| 4 | Key |
| 5 | Ball Stud |
| 6 | Capscrew and Washer |
| 7 | Grease Fitting |
| 8 | Greaseable Knuckle Cap |
| 9 | Sealed Knuckle Cap |
| 10 | Gasket |
| 11 | Easy Steer™ King Pin Bushing |
| 12 | Bronze King Pin Bushing |
| 13 | Nylon King Pin Bushing |
| 14 | Knuckle |
| 15 | King Pin Bushing Seal |
| 16 | Tie Rod Arm-to-Knuckle Castle Nut |
| 17 | Cotter Pin |
| 18 | King Pin |
| 19 | Hub Grease Seal |
| 20 | Inner Wheel Bearing Cone |
| 21 | Inner Wheel Bearing Cup |
| 22 | Wheel Bolt |
| 23 | Hub |
| 24 | Outer Wheel Bearing Cup |
| 25 | Outer Wheel Bearing Cone |
| 26 | Adjusting Nut |
| 27 | Pierced Lock Ring |
| 28 | Lock Washer |
| 29 | Wheel Bearing Nut |
| 30 | "D" Washer |
| 31 | Adjusting Nut |
| 32 | Cotter Pin |
| 33 | Gasket |
| 34 | Hubcap |
| 35 | Capscrew and Washer |
| 36 | Axle Beam |
| 37 | Shims |
| 38 | Tapered Draw Key |
| 39 | Threaded Draw Key |
| 40 | Threaded Draw Key Nut |
| 41 | Thrust Bearing and Flat-Type Bearing Seal |
| 42 | Thrust Bearing and Cover-Type Bearing Seal |
| 43 | Integral Thrust Bearing and Oil Seal |
| 44a | Steering Arm-to-Knuckle Castle Nut |
| 44b | Steering Arm-to-Knuckle Castle Nut, Flared Base |
| 45 | 3/4-Inch Stop Bolt |
| 46 | 3/4-Inch Jam Nut |
| 47 | 1/2-Inch Stop Bolt |
| 48 | 1/2-Inch Jam Nut |
| 49 | 3/4-Inch Adapter |
| 50 | Washer |
| 51 | Cotter Pin |
| 52 | Square Key |
| 53 | Woodruff Key |
| 54 | Knuckle Tie Rod Arm |
| 55 | Cotter Pin |
| 56 | Tie Rod Arm-to-Tie Rod End Castle Nut |
| 57 | Tie Rod End |
| 58 | Clamp Bolt |
| 59 | Clamp Lock Nut |
| 60 | Cross Tube Clamp |
| 61 | Cross Tube |
| 62 | Knuckle with Integral Tie Rod Arm and Torque Plate |
| 63a | Old Style Threaded Knuckle Cap |
| 63b | New Style Threaded Knuckle Cap |
| 63c | Round Threaded Knuckle Cap |
| 64 | Bolt-On Steering Arm |
| 65 | Steering Arm Capscrew |
| 66 | Knuckle with Integral Tie Rod Arm |

## 2. TORQUE SPECIFICATIONS

Front Non-Drive Axles with Conventional Wheel Ends

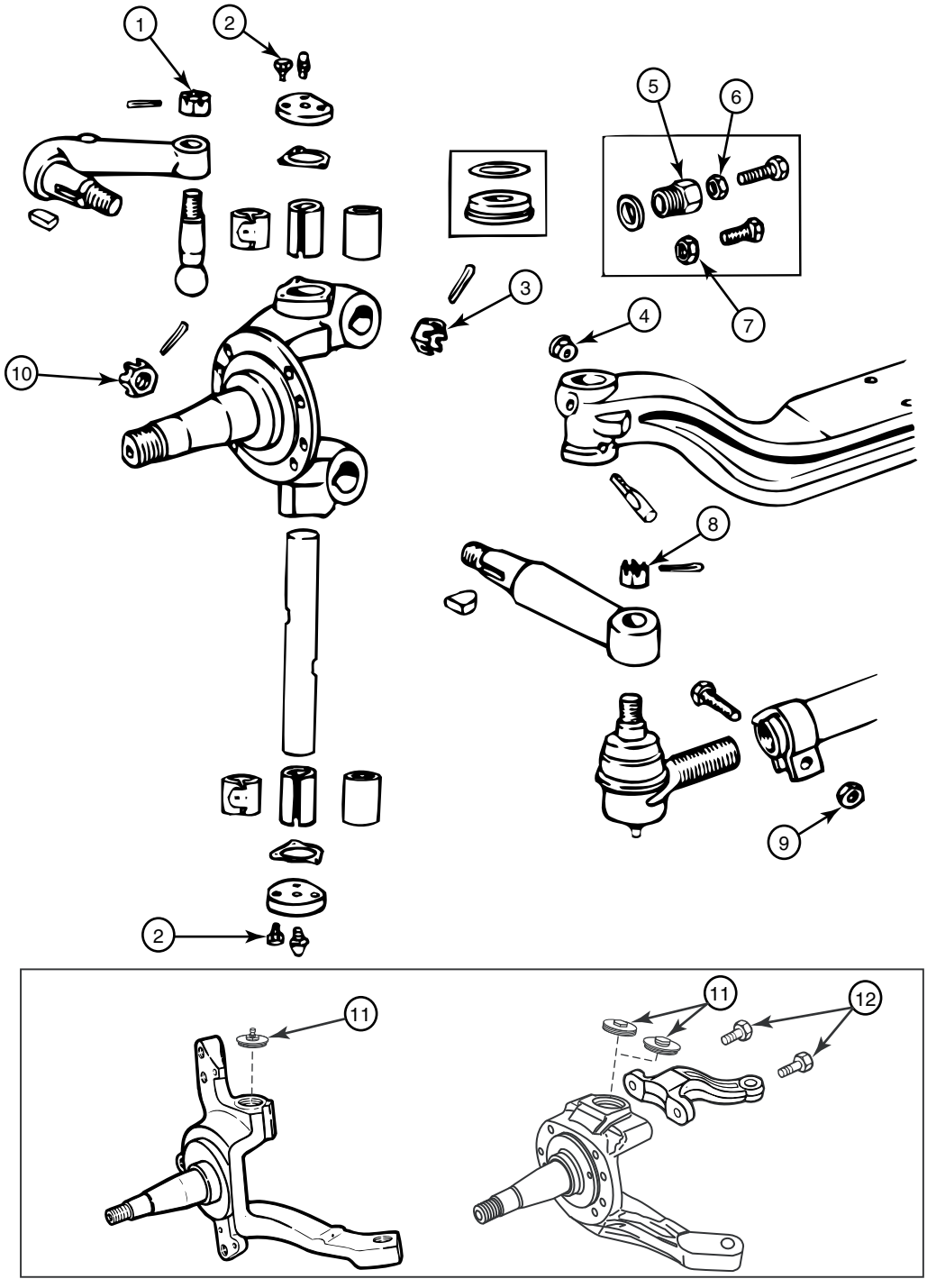


1000403d

SAPH08Z060200006

**Front Axle with Conventional Wheel-End Torque Specifications**

| Item | Description | Size | Torque Range lb-ft | Torque Range N•m |
|---|---|---|---|---|
| 1 | Steering Arm-to-Drag Link Nut | Refer to the vehicle manufacturer's specification | | |
| 2 | Knuckle Cap Capscrew | 5/16"-18 | 20-30 | 28-40 |
| 3 | Steering Arm-to-Knuckle Nut | 7/8"-14 | 250-450 | 339-610 |
| | | 1"-14 | 390-725 | 529-982 |
| | | 1-1/8"-12 | 550-1025 | 746-1389 |
| | | 1-1/4"-12 | 775-1450 | 1051-1965 |
| | | 1-1/2"-12 | 1350-2525 | 1831-3423 |
| 4 | Draw Key Nut | 7/16"-20 | 30-45 | 41-61 |
| 5 | 3/4" Stop Screw Adapter | | 65-115 | 88-155 |
| 6 | 1/2" Stop Screw Lock/Jam Nut | | 50-75 | 68-101 |
| 7 | 3/4" Stop Screw Lock/Jam Nut | | 65-85 | 88-115 |
| 8 | Tie Rod Arm-to-Tie Rod End Nut | 7/8"-14 | 160-300 | 217-406 |
| | | 1"-14 | 250-450 | 339-610 |
| | | 1-1/8"-12 | 350-650 | 475-881 |
| | | 1-1/4"-12 | 500-675 | 678-915 |
| 9 | Cross Tube Clamp Nut | 5/8"-11 | 40-60 | 55-81 |
| | | 3/4"-10 | 155-175 | 211-237 |
| 10 | Tie Rod Arm-to-Knuckle Nut | 7/8"-14 | 250-450 | 339-610 |
| | | 1"-14 | 390-725 | 529-982 |
| | | 1-1/8"-12 | 550-1025 | 746-1389 |
| | | 1-1/4"-12 | 775-1450 | 1051-1965 |
| | | 1-1/2"-12 | 1350-2525 | 1831-3423 |
| 11 | Threaded Knuckle Cap | 2.00"-20 | 70-90 | 95-122 |
| | | 1-5/8"-20 | | |
| 12 | Steering Arm Knuckle Bolt | 3/4"-16 | 360-470 | 490-638 |
| | | M16 x2.0 | 215-265 | 290-360 |

SAPH08Z060200007

# SERVICE NOTES

EN08Z0602A100001

## BEFORE YOU BEGIN

1. Read and understand all instructions and procedures before you begin to service components.
2. Read and observe all Warning and Caution hazard alert messages in this publication. They provide information that can help prevent serious personal injury, damage to components, or both.
3. Follow your company's maintenance and service, installation, and diagnostics guidelines.
4. Use special tools when required to help avoid serious personal injury and damage to components.

### 1. HAZARD ALERT MESSAGES AND TORQUE SYMBOLS

**⚠ WARNING**
**A Warning alerts you to an instruction or procedure that you must follow exactly to avoid serious personal injury and damage to components.**

**⚠ CAUTION**
**A Caution alerts you to an instruction or procedure that you must follow exactly to avoid damage to components.**

### 2. OBTAIN ADDITIONAL MAINTENANCE AND SERVICE INFORMATION

(1) On the Web
Visit Literature on Demand at arvinmeritor.com to access product, service, aftermarket, and warranty literature for ArvinMeritor's truck, trailer and specialty vehicle components.

### 3. OBTAIN TOOLS AND SUPPLIES SPECIFIED IN THIS MANUAL

Call ArvinMeritor's Commercial Vehicle Aftermarket at 888-725-9355 to obtain Meritor tools and supplies.

SPX Kent-Moore, 28635 Mound Road, Warren, Michigan, 48092. Call the company's customer service center at 800-345-2233, or visit their website at spxkentmoore.com.

Tiger Tools. Call the company's customer service center at 800-661-4661, or visit their website at tigertool.com.

For Owatonna Tools, contact OTC Tool and Equipment Division, 655 Eisenhower Drive, Owatonna, Minnesota, 55060.

Great Lakes Tool Specialties, 8530 M-89, Richland, Michigan, 49083. Call the company's customer service center at 800-877-9618 or 616-629-9628.

For Snap-On® tools, contact your local Snap-On® dealer.

# SPECIAL TOOLS

EN08Z0602K100001

To obtain these tools, refer to the Service Notes on page AX02-10.

Table U: Special Tools

| Description | SPX Kent-Moore Tool Number | Owatonna Tool Number | Snap-On® Tool Number | Great Lakes Tool | References |
|---|---|---|---|---|---|
| King Pin Remover | 4240 | 4240 | 20 Ton: CG430HYB<br>35 Ton: CG730HY | - | Draw Keys, King Pin Caps, King Pins and Steering Knuckle on page AX02-25 |
| King Pin Bushing Service Kit | [1] | | | | King Pin Bushings on page AX02-29<br>King Pin Bushings on page AX02-38 |
| Basic Service Kit | PT 4375-A | - | - | - | |
| FC and MFS-8 | PT-4370-120 | - | - | - | |
| Seal Installer | - | - | - | Meritor Front Axle Seal Installer Kit | Inner Knuckle Bore King Pin Seals on page AX02-41 |

[1] Use the Basic Service Kit along with the correct axle series kit.

SAPH08Z060200008

## 1. DIMENSIONS FOR BUSHING REMOVAL AND INSTALLATION TOOL

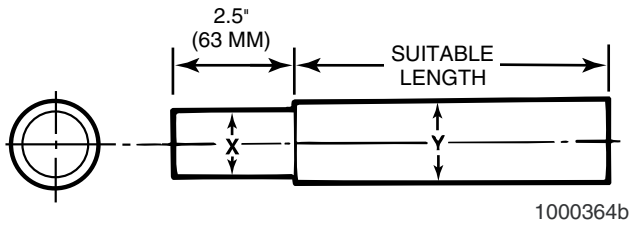


| Axle Model Number | Dimension X (± 0.001-inch) | (± 0.025 mm) | Dimension Y (± 0.001-inch) | (± 0.025 mm) |
|---|---|---|---|---|
| MFS 8 | 1.493 | 37.922 | 1.618 | 41.097 |
| MFS 10 | | | | |
| MFS 12 | 1.786 | 45.364 | 1.911 | 48.539 |
| MFS 14 | | | | |

SAPH08Z060200009

## 2. BUSHING REAMER DIMENSIONS

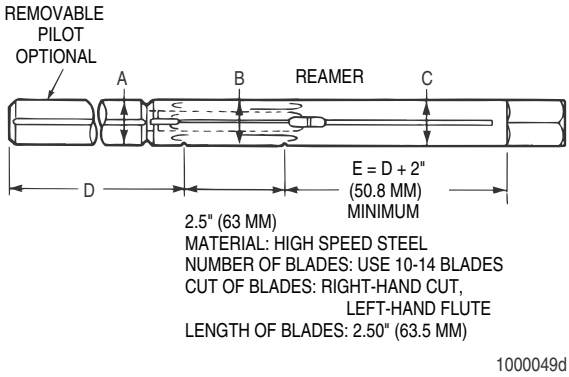


| | Lower Pilot Diameter Dimension A (± 0.001-inch or ± 0.0245 mm) | | Blade Diameter Dimension B (± 0.0005-inch or ± 0.0127 mm) | | Upper Pilot Diameter C (± 0.001-inch or ± 0.0245 mm) | | Lower Pilot Length Dimension D | | Upper Pilot Length Minimum Dimension E | |
|---|---|---|---|---|---|---|---|---|---|---|
| Axle Model | inch | mm | inch | mm | inch | mm | inch | mm | inch | mm |
| MFS 8 | 1.4875 | 37.7825 | 1.5015 | 38.1381 | 1.4960 | 37.9984 | 8.90 | 226.06 | 10.90 | 276.86 |
| MFS 10 | 1.7800 | 45.2120 | 1.7955 | 45.6057 | 1.7900 | 45.4660 | 10.25 | 260.35 | 12.25 | 311.15 |
| MFS 12 | | | | | | | | | | |
| MFS 14 | 1.7800 | 45.2120 | 1.7955 | 45.6057 | 1.7900 | 45.4660 | 10.25 | 260.35 | 12.25 | 311.15 |

SAPH08Z060200010

### 3. WHEEL-END SEAL DRIVER APPLICATION CHART

(1) MFS-8 AXLE

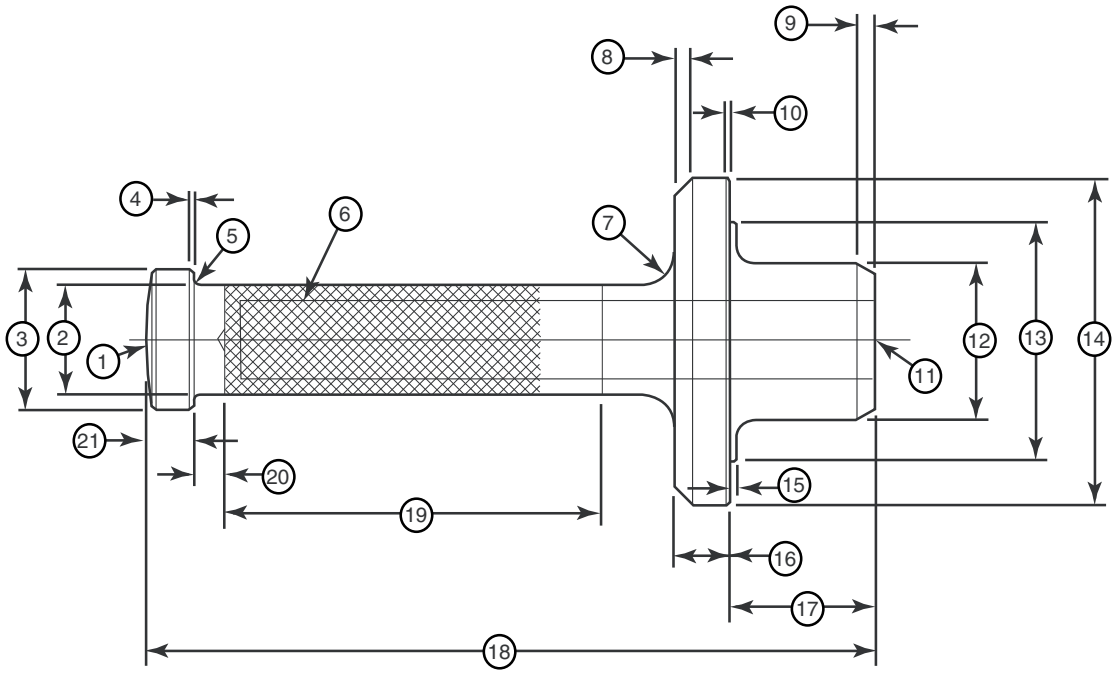


4004353a

| | | | | | | | |
|---|---|---|---|---|---|---|---|
| 1 | 0.75” (19.1 MM) | 7 | R 0.5” (12.7 MM) | 13 | 3.29” (83.57 MM) | 18 | 2” (50.8 MM) |
| 2 | 1.5” (38.1 MM) DIAMETER | 8 | 0.25” (6.35 MM) X 45˚ TYP | 14 | 4.5” (114 MM) | 19 | 10” (254 MM) |
| 3 | 2” (50.8 MM) DIAMETER | 9 | 0.25” (6.35 MM) X 60˚ | 15 | R 0.25” (6.35 MM) | 20 | 5” (127 MM) |
| 4 | 0.06”(1.52 MM) X 45˚ TYP | 10 | 0.03” (0.76 MM) X 45˚ | 16 | 0.1” (2.54 MM) | 21 | 0.5” (12.7 MM) |
| 5 | R 0.13” (3.3 MM) | 11 | 1” (25 MM) DIAMETER-8.5” (216 MM) DEEP | 17 | 0.75” (19.1 MM) | 22 | 6” (152.4 MM) SPHERE RADIUS |
| 6 | COARSE KNURL | 12 | 2.16” (54.8 MM) DIAMETER | | | | |

SAPH08Z060200011

(2) MFS-10 AXLE

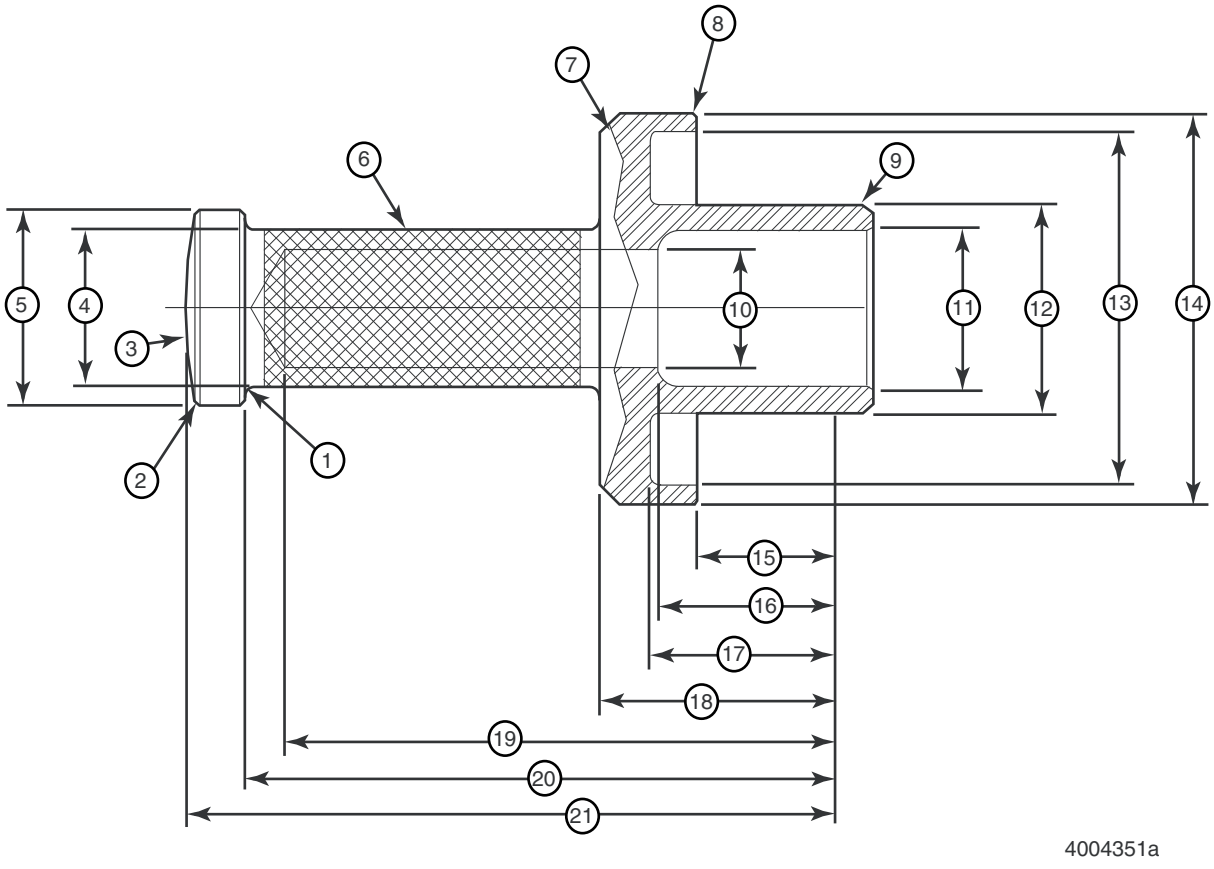


| | | | | | | | |
|---|---|---|---|---|---|---|---|
| 1 | 0.13” (3.3 MM) RADIUS (2) | 7 | 0.25” (6.35 MM) X 45˚ CHAMFER | 12 | 2.62/2.622” (66.55/66.6 MM) DIAMETER | 17 | 2.85” (72.4 MM) |
| 2 | 0.6” (1.52 MM) X 45 CHAMFER (2) | 8 | 0.03” (0.76 MM) X 45˚ CHAMFER (2) | | | 18 | 3.5” (88.9 MM) |
| 3 | 6” (152.4 MM) SPHERE RADIUS ± 0.25. (6.35 MM) | 9 | 0.12” (3.05 MM) X 0.13” (3.3 MM) CHAMFER | 13 | 4.5” (114 MM) DIAMETER | 19 | 7.5” (190.5 MM) |
| 4 | 2” (50.8 MM) DIAMETER | 10 | 1.5” (38.1 MM) DIAMETER | 14 | 5” (127 MM) DIAMETER | 20 | 8” (203.2 MM) |
| 5 | 2.5” (63.5 MM) DIAMETER | 11 | 2” (50.8 MM) | 15 | 2.25” (57.2 MM) | 21 | 8.75” (222.25 MM) |
| 6 | COARSE KNURL | | | 16 | 2.75” (69.9 MM) | | |

SAPH08Z060200012

(3) MFS-12 AXLE

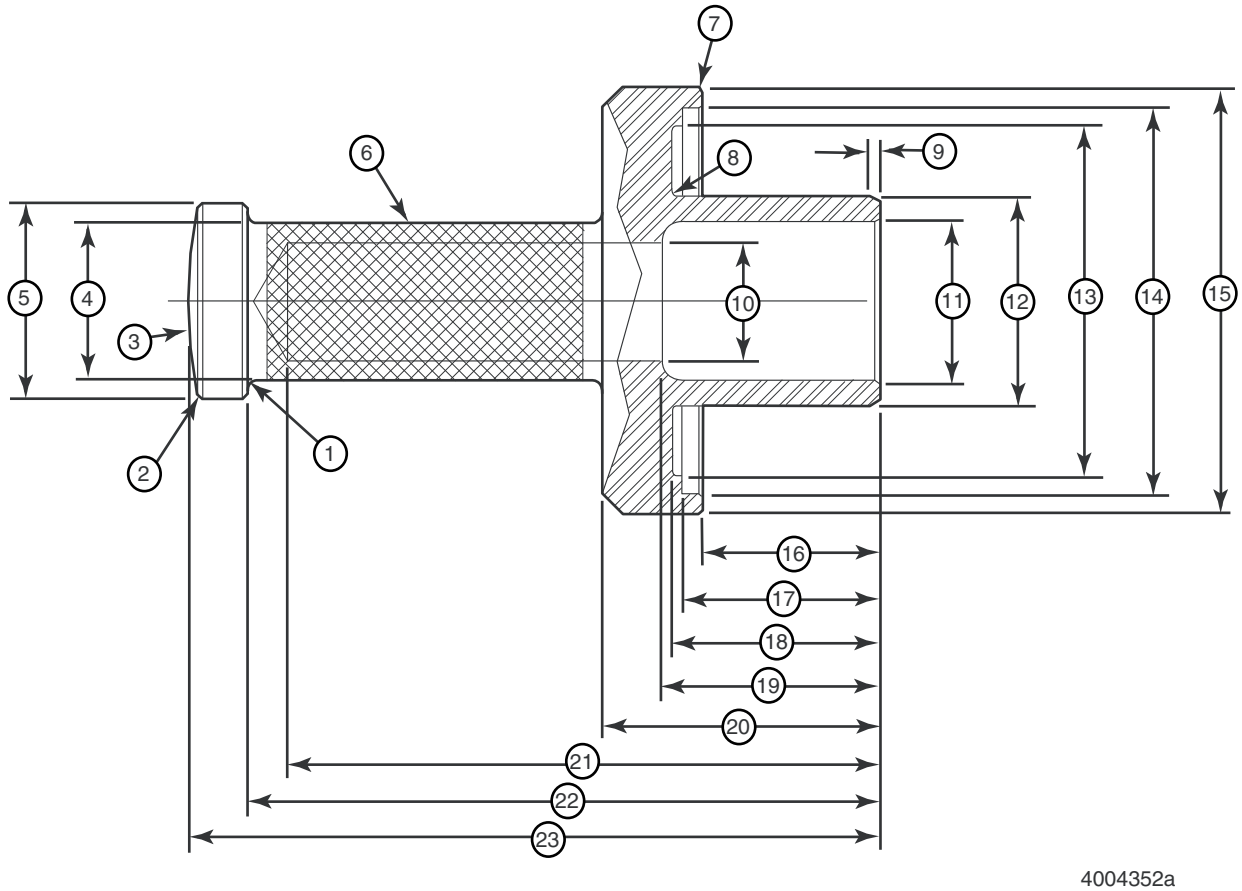


| | | | | | | | |
|---|---|---|---|---|---|---|---|
| 1 | 0.13” (3.3 MM) RADIUS (2) | 8 | 0.06” (1.52 MM) R-2PLS | 14 | 4.4” (111.76 MM) DIAMETER | 20 | 2.62” (69.85 MM) |
| 2 | 0.06” (1.52 MM) X 45˚ CHAMFER (2) | 9 | 0.12” (3.05 MM) X 30˚ | 15 | 4.865” (123.57 MM) DIAMETER | 21 | 2.75” (69.85 MM) |
| 3 | 6” (152.4 MM) SPHERE RADIUS ^2.5 | 10 | 0.25” (6.35 MM) R | 16 | 5.38” (136.65 MM) DIAMETER | 22 | 3.5” (88.9 MM) |
| 4 | 2” (50.8 MM) | 11 | 1.5” (38.1 MM) DIAMETER | 17 | 0.03” (0.76 MM) R. MAX. | 23 | 7.5” (190.5 MM) |
| 5 | 2.5” (63.5 MM) DIAMETER | 12 | 2” (50.8 MM) DIAMETER | 18 | 2.25” (57.15 MM) | 24 | 8”. (203.2 MM) |
| 6 | COARSE KNURL | 13 | 2.60/2.622” (66.55/66.6 MM) DIAMETER | 19 | 2.5” (63.5 MM) | 25 | 8.75” (222.25 MM) |
| 7 | 0.03” (0.76 MM) X 45˚ CHAMFER (2) | | | | | | |

SAPH08Z060200013

# INTRODUCTION

EN08Z0602A100002

## 1. HAZARD ALERT MESSAGES

Read and observe all Warning and Caution hazard alert messages in this publication. They provide information that can help prevent serious personal injury, damage to components, or both.

**⚠ WARNING**

**To prevent serious eye injury, always wear safe eye protection when you perform vehicle maintenance or service.**

## 2. DESCRIPTION

The descriptions and procedures contained in this maintenance manual are applicable to all Meritor front non-drive steer axles.

Meritor front non-drive steer axles in this manual feature the following components.

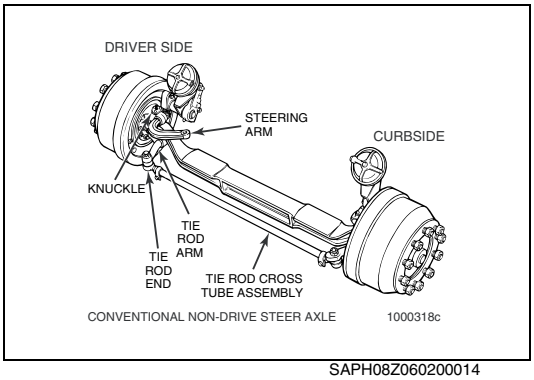


SAPH08Z060200014

## 3. TIE ROD ARM, KNUCKLE AND KING PIN

The right tie rod arm is a mirror image of the left, and they are linked by the cross tube assembly. An integral tie rod design is used on Easy Steer Plus™ and MFS axles.

The right knuckle and king pin assembly is similar to the left, except that it does not have a steering arm attached to it as in a manual steering system.

A power steering system requires a steering arm in various applications for attachment of the auxiliary assist cylinder to the right knuckle.

## 4. STEERING KNUCKLE

Steering knuckles are rated according to the capacity of the front axle. All models use straight king pins. Three types of king pin bushings are used: nylon, bronze and Easy Steer™.

The brake spider has been combined into the knuckle of the Easy Steer Plus™ axle.

## 5. STEERING ARMS

The steering arm, usually a forged component, converts the drag link force into a turning movement through the left king pin and the knuckle. Bolt-on steering arms are used on Easy Steer Plus™ and MFS modular axles.

## 6. PITMAN ARM

The Pitman arm converts the output torque from the steering gear into the control force applied to the drag link. This linkage component connects the steering gear to the linkage at the center link end.

# INSPECTION

EN08Z0602A100003

## HAZARD ALERT MESSAGES

Read and observe all Warning and Caution hazard alert messages in this publication. They provide information that can help prevent serious personal injury, damage to components, or both.

**⚠ WARNING**

**To prevent serious eye injury, always wear safe eye protection when you perform vehicle maintenance or service.**

**Park the vehicle on a level surface. Block the wheels to prevent the vehicle from moving. Support the vehicle with safety stands. Do not work under a vehicle supported only by jacks. Jacks can slip and fall over. Serious personal injury and damage to components can result.**

**Replace damaged or out-of-specification axle components. Do not bend, repair or recondition axle components by welding or heat-treating. A bent axle beam reduces axle strength, affects vehicle operation and voids Meritor's warranty. Serious personal injury and damage to components can result.**

Before inspecting axle components, verify that the correct tools are available. Using the correct tools will ensure safety and provide the most accurate results.

- Dial indicator
- Tire blocks
- Jack
- Safety stands
- Pry bar
- Torque wrench

**1. RECOMMENDATION**

Meritor believes that the wheel attachment clamp joint must be carefully maintained with:

- Correct hardware.
- Clean, flat, uncontaminated mounting surfaces.
- Correct nut torquing and retorquing practices.

Meritor believes that installing a wheel separator plate may make it more difficult to ensure correct wheel clamp with use over time. Refer to the wheel separator plate manufacturer's recommended wheel stud nut torque maintenance practices.

Meritor further believes that the use of more than one wheel separator plate in a wheel end is inappropriate and that a wheel separator plate should never be installed between the hub and the drum. This practice is expressly prohibited with Meritor axle models MFS-12, FF-981, FF-982, FF-983, FF-984, FF-986 and FF-987.

Therefore, Meritor recommends that vehicle owners who install and use wheel separator plates should also increase the frequency of their wheel-end maintenance, consistent with wheel separator plate manufacturer's recommended practices, so they are confident that the intended wheel attachment clamp integrity is maintained.

In addition, Meritor recommends that the users of wheel separator plates should contact the wheel separator plate manufacturers to obtain recommendations and approval for any special application or

more demanding environments (i.e., use at elevated temperature ranges or frequent stop-start cycling) which may also potentially affect the integrity of the wheel attachment system.

**2. INSPECT PARTS**

(1) Fasteners
   a. Verify that all fasteners are tightened to the specified torque.
   b. Use a torque wrench to check the torque. As soon as the fastener starts to move, record the torque. Correct if necessary.
   c. Replace any worn or damaged fasteners.

(2) Wear and Damage
Inspect the parts of the axle for wear and damage. Look for bent or cracked parts. Replace all worn or damaged parts.

(3) Pivot Points
Verify that pivot points are not loose. Verify that the pivot points are lubricated.

(4) Operation
Verify that all the parts move smoothly through the complete turning radius.

(5) Tire Wear
Inspect the tires for wear patterns that indicate suspension damage or misalignment. Correct if necessary.

(6) Steering Arm Bolts
Check the torque on all bolt-on steering arm bolts every 30,000 miles (50,000 km).

(7) Draw Key Nuts
On axles with either conventional or unitized wheel ends, tighten the draw key nuts to 30-45 lb-ft (41-61 N·m) at the following intervals.

- After the first 6,000 miles (10,000 km) of new vehicle operation
- Every 36,000 miles (60,000 km) of operation

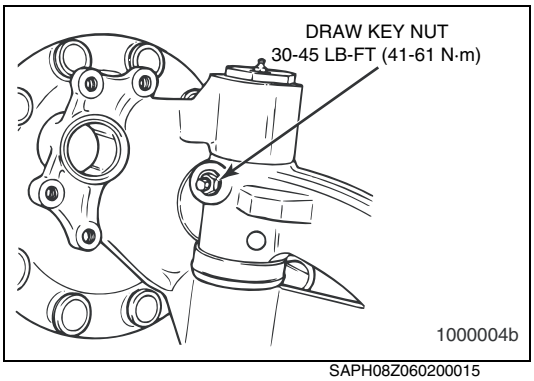

SAPH08Z060200015

### 3. STEERING KNUCKLE VERTICAL END PLAY

**End Play Specifications**

| | |
|---|---|
| **New or Rebuilt Axles** | **0.001-0.010 inch (0.025-0.254 mm)** |
| **In-Service Axles** | **0.001-0.030 inch (0.025-0.762 mm)** |

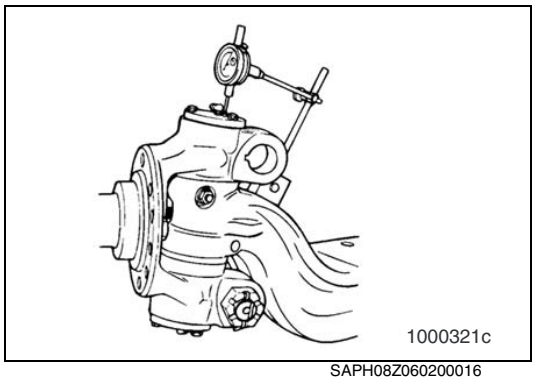

SAPH08Z060200016

(1) Axles with Conventional Wheel Ends

a. Park the vehicle on a level surface. Block the wheels to prevent the vehicle from moving. Set the parking brake.
b. Use a jack to raise the vehicle until the front wheels are off the ground. Support the front axle with safety stands.
c. Install a dial indicator with the base on the I-beam and the tip on the top knuckle cap.

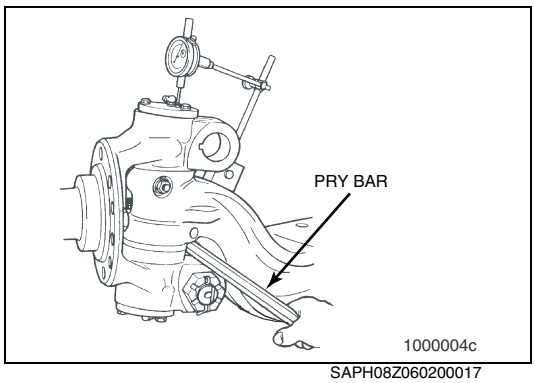

SAPH08Z060200017

d. Place a pry bar between the boss for the tie rod arm and the I-beam. Push the knuckle to the BOTTOM of vertical travel.
e. Set the dial indicator on ZERO.
f. Use the pry bar to push the knuckle UPWARD. Record the reading on the dial indicator.

- **If the reading is ZERO:** Remove the knuckle. Refer to "Draw Keys, King Pin Caps, King Pins and Steering Knuckle" on page AX02-25. Remove the shims from the shim pack. Refer to "Knuckle to the Axle Beam" on page AX02-42.
- **If the reading is more than the correct end play:** Remove the knuckle. Refer to "Draw Keys, King Pin Caps, King Pins and Steering Knuckle" on page AX02-25. Add shims to the shim pack. Refer to "Knuckle to the Axle Beam" on page AX02-42.

### 4. UPPER AND LOWER KING PIN BUSHINGS

(1) Wheel-to-Hub Mounting

To help determine the cause of movement and looseness, first check the wheel-to-hub mounting.

a. Verify that the wheel is mounted correctly and all wheel-end fasteners and hardware are tightened to the correct specification.
b. Apply the service brake to lock the hub and spindle together.

- **If movement is detected:** The king pin or king pin bushings should be inspected. Refer to the procedure below.
- **If applying the service brake eliminates the movement:** Proceed to "Unitized Wheel Ends", "Detailed Inspection" to determine the unitized wheel-end hub end play.

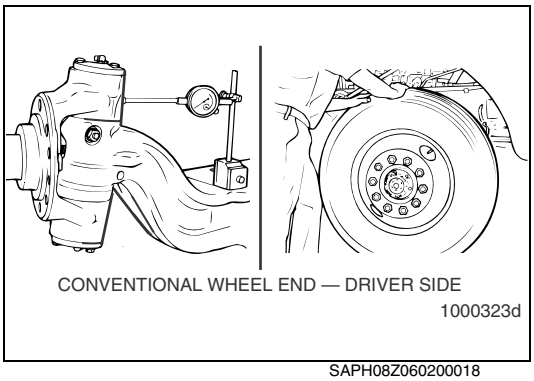
CONVENTIONAL WHEEL END — DRIVER SIDE
1000323d
SAPH08Z060200018

(2) Axles with Conventional and Unitized Wheel Ends

a. Park the vehicle on a level surface. Block the wheels to prevent the vehicle from moving. Set the parking brake.
b. Use a jack to raise the vehicle until the wheels are off the ground. Support the vehicle with safety stands.
c. Check the upper king pin bushing for wear. Install a dial indicator with the base on the I-beam and the tip against the side of the top of the knuckle.
d. Set the dial indicator to ZERO.

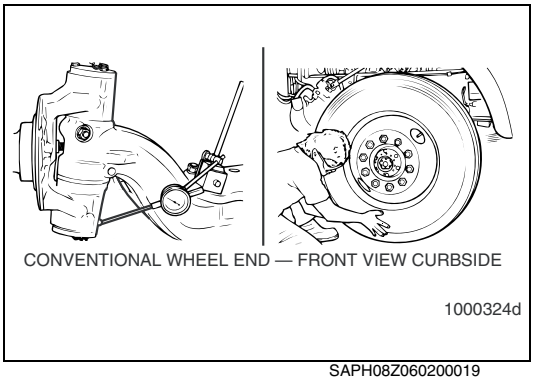
CONVENTIONAL WHEEL END — FRONT VIEW CURBSIDE
1000324d
SAPH08Z060200019

e. Move the top of the tire side-to-side TOWARD and AWAY from the vehicle.

- **If the dial indicator moves a total of 0.010-inch (0.254 mm):** The upper bushing is worn or damaged. Replace both bushings in the knuckle. Refer to "King Pin Bushings" on page AX02-29, "Inspection" on page AX02-34 and "King Pin Bushings" on page AX02-38.

f. Check the lower king pin bushing. Install a dial indicator so that the base is on the I-beam and that the tip is against the side of the bottom of the knuckle.
g. Set the dial indicator to ZERO.
h. Move the bottom of the tire side-to-side TOWARD and AWAY from the vehicle.

- **If the dial indicator moves a total of 0.010-inch (0.254 mm):** The lower bushing is worn or damaged. Replace both bushings in the knuckle. Refer to "King Pin Bushings" on page AX02-29, "Inspection" on page AX02-34 and "King Pin Bushings" on page AX02-38.

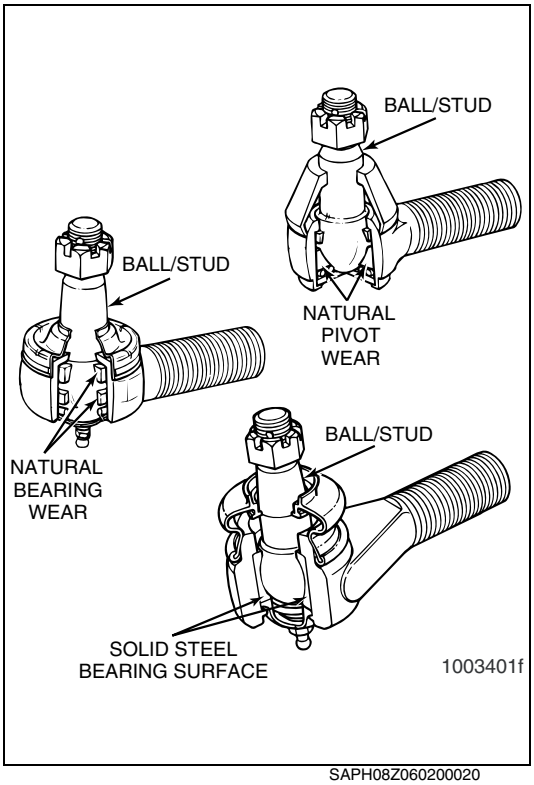

SAPH08Z060200020

**5. TIE ROD AND CROSS TUBE ASSEMBLY**

**NOTICE**

**Do not grease the tie rod assembly before you perform the inspection.**

You may not be able to detect loose or worn tie rod ends during operation. Under normal operating conditions, wear occurs over time. The preload bearings inside each tie rod end provide less resistance, which can affect steering control, front tire wear and other axle components.

Regularly-scheduled inspection and maintenance helps to minimize the effects of tie rod end wear on the vehicle.

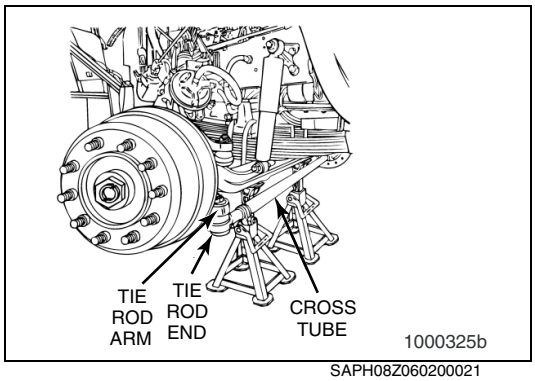

SAPH08Z060200021

(1) Park the vehicle on a level surface with the wheels STRAIGHT. Block the wheels to prevent the vehicle from moving. Set the parking brake.

(2) Raise the vehicle so that the front wheels are off the ground. Support the vehicle with safety stands. Do not use a jack to support the vehicle.

(3) With the engine off, turn the wheels from full left to full right. Return to the straight-ahead position. This step will require more force for vehicles with the power steering off.

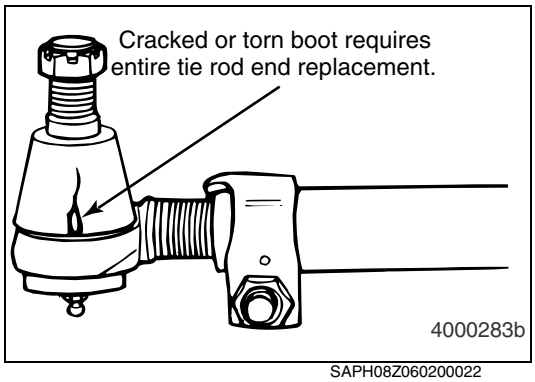

SAPH08Z060200022

(4) Check the tie rod boot for cracks, tears or other damage. Also check the boot seals for damage. Replace the entire tie rod end if the boot is damaged or missing.

**⚠ WARNING**

**Verify that a cotter pin is installed through the tie rod end, and the tie rod end nut is tightened to the correct torque specification. Replace a missing cotter pin and tighten a loose tie rod end nut. A missing cotter pin or loose tie rod end nut can cause loss of steering control. Serious personal injury and damage to components can result.**

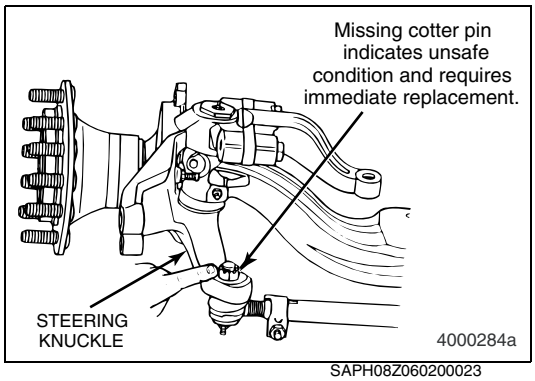

SAPH08Z060200023

(5) Check that the tie rod nut is installed and secured with a cotter pin.

- **If the cotter pin is missing:** Tighten the tie rod end nut to the correct specification. Install a new cotter pin. Always tighten the tie rod nut to the specified torque when setting the cotter pin. Refer to page AX02-8. Do not back-off the nut to insert the cotter pin.

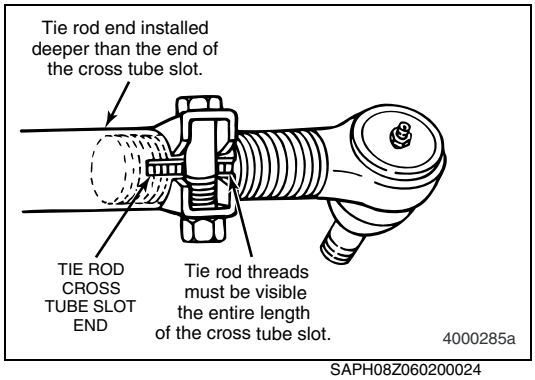

SAPH08Z060200024

(6) Check that the tie rod end is threaded correctly into the cross tube and installed deeper than the end of the cross tube slot. The tie rod end must be visible the entire length of the cross tube slot.

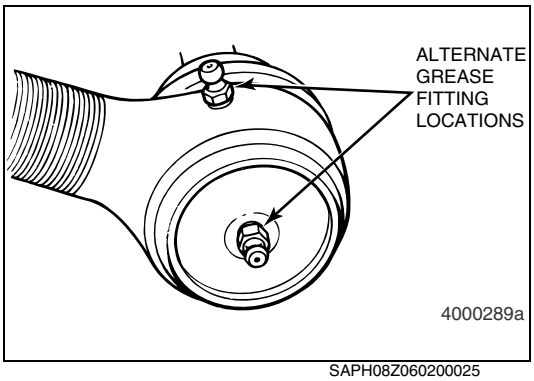

SAPH08Z060200025

(7) Check that the grease fittings are installed. Replace a damaged grease fitting.

- **If the tie rod ends are non-greaseable:** Do not install a grease fitting.

(8) By hand or using a pipe wrench with jaw protectors to avoid gouging the cross tube, rotate the cross tube toward the FRONT of the vehicle and then toward the REAR. After rotating, center the cross tube between the stop positions.

- **If the cross tube will not rotate in either direction:** Replace both tie rod ends.

(9) Position yourself directly below the ball stud socket. Using both hands, grasp the assembly end as close to the socket as possible, no more than 6-inches (152.4 mm) from the end.

**⚠ CAUTION**
**Only use your hands to check for movement or looseness of the tie rod assembly. Do not use a crow bar, pickle fork or two-by-four. Do not apply pressure or force to tie rod assembly ends or joints. Do not rock the tires with the vehicle on the ground or with the wheels raised. Damage to components can result.**

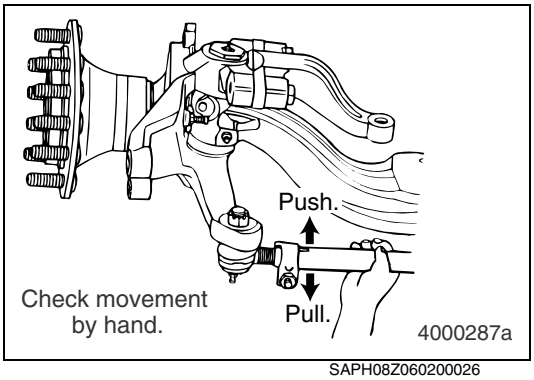

SAPH08Z060200026

(10) Apply hand pressure of approximately 100 pounds in a vertical PUSH and PULL motion several times. Check for any movement or looseness at both tie rod ends.

- **If there is any movement in the tie rod assembly:** Replace both tie rod ends.

**⚠ CAUTION**
**Replace bent or damaged cross tubes with original equipment parts of the same length, diameter and threads. Do not attempt to straighten a bent cross tube. Damage to components can result.**

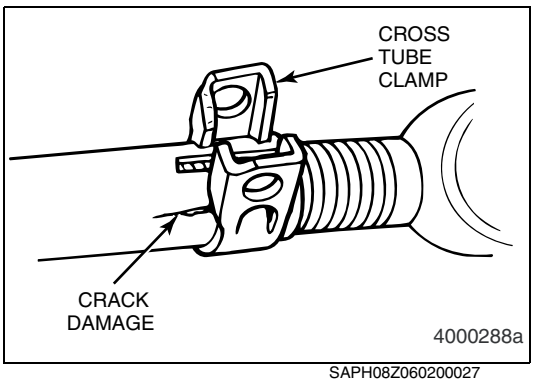

SAPH08Z060200027

(11) Inspect the cross tube and clamps for damage.

- **If the cross tube is bent or cracked:** Replace it. Use original equipment parts of the same length, diameter and threads.
- **If the clamps are damaged:** Replace them.
- **If either clamp has become welded to the cross tube:** Replace the entire cross tube assembly. Use original equipment parts of the same length, diameter and threads.

**6. DEPARTMENT OF TRANSPORTATION ROADSIDE TIE ROD ASSEMBLY REPLACEMENT CRITERIA**

When the roadside check indicates tie rod movement of 1/8-inch (3 mm) or more, immediately remove the vehicle from service to replace the tie rod.

- **If the roadside check is less than 1/8-inch (3 mm) tie rod end movement:** The vehicle does not need to be immediately removed from a service run. Schedule a major out-of-service inspection and maintenance as soon as possible.

# DISASSEMBLY

EN08Z0602H200001

## HAZARD ALERT MESSAGES

Read and observe all Warning and Caution hazard alert messages in this publication. They provide information that can help prevent serious personal injury, damage to components, or both.

**⚠ WARNING**

**To prevent serious eye injury, always wear safe eye protection when you perform vehicle maintenance or service.**

**Park the vehicle on a level surface. Block the wheels to prevent the vehicle from moving. Support the vehicle with safety stands. Do not work under a vehicle supported only by jacks. Jacks can slip and fall over. Serious personal injury and damage to components can result.**

**Use a brass or leather mallet for assembly and disassembly procedures. Do not hit steel parts with a steel hammer. Pieces of a part can break off and cause serious personal injury.**

## REMOVAL

**1. WHEEL ENDS**

(1) Axles with conventional wheel ends.

a. Park the vehicle on a level surface. Block the wheels to prevent the vehicle from moving. Set the parking brake.

b. Raise the front of the vehicle until the front wheels are off the floor. Support the vehicle with safety stands.

c. Use the correct size socket to remove the capscrews that fasten the cap to the hub. Remove the cap and the gasket.

d. Remove the fasteners for the wheel bearings.

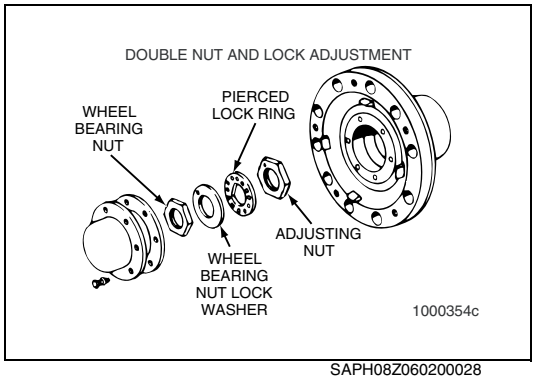


SAPH08Z060200028

1. For double nut and lock fasteners, bend the tabs of the flattened lock washer away from the wheel bearing nut and the adjusting nut.

2. Remove the wheel bearing nut, the lock washer, the pierced lock ring and the adjusting nut from the knuckle.

e. Remove the outer wheel bearing cone from the hub. Remove the wheel, tire, hub and drum as an assembly.

f. Remove the brake components.

g. Remove the oil seal from the hub. Remove the inner wheel bearing cone.

h. Inspect the wheel bearings. Refer to "Wheel Bearings" on page AX02-35.

**2. DRAG LINK**

(1) Remove the cotter pins from the ball studs. Remove the nuts from the ball studs.

(2) Disconnect the drag link from the Pitman arm and the steering arm. Inspect the drag link. Refer to "INSPECTION" on page AX02-34.

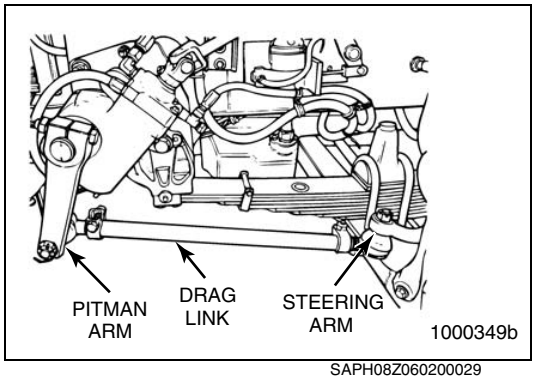


SAPH08Z060200029

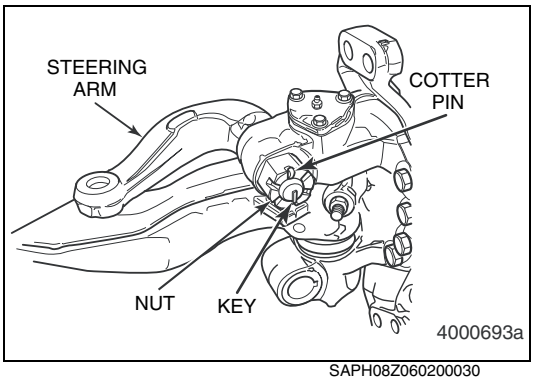

SAPH08Z060200030

**3. STEERING ARM**

(1) Axles with a keyed steering arm.

a. Remove the cotter pin and nut that fasten the steering arm to the drag link. Disconnect the steering arm from the drag link.

b. Remove the cotter pin and nut that fasten the steering arm to the knuckle.

c. Remove the steering arm from the knuckle. If necessary, use a leather or plastic mallet to tap on the end of the arm and separate the arm from the knuckle.

d. Remove the key from the steering arm. Inspect the steering arm. Refer to "INSPECTION" on page AX02-34.

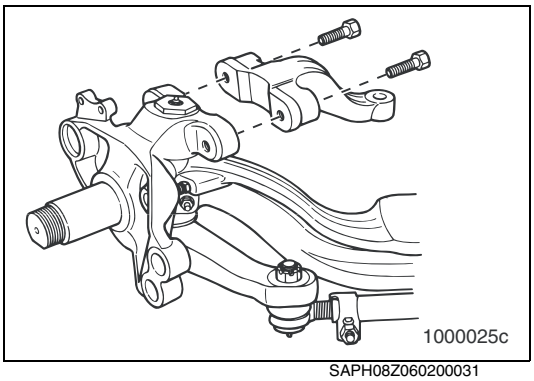

SAPH08Z060200031

(2) Axles with a bolt-on steering arm.

a. Remove the two steering-arm-to-knuckle capscrews from the knuckle assembly.

b. Remove the steering arm from the knuckle. If necessary, use a leather or plastic mallet to tap the outside of the arm and separate the arm from the knuckle.

c. Remove the steering arm. Inspect the steering arm. Refer to "INSPECTION" on page AX02-34.

**4. TIE ROD ARMS, TIE ROD ENDS AND CROSS TUBE**

**⚠ WARNING**

**Support the tie rod assembly during maintenance and service to prevent serious personal injury and damage to components. If the cross tube clamps are tack-welded, do not remove the tack weld during tie rod assembly removal. If you remove the tack weld, clamp force is reduced. Replace the cross tube if the weld is broken. Loss of steering control, serious personal injury and damage to components can result.**

**⚠ CAUTION**

**Do not heat the arm to remove the tie rod assembly. Heating the tie rod arm will soften parts. Damage to components will result.**

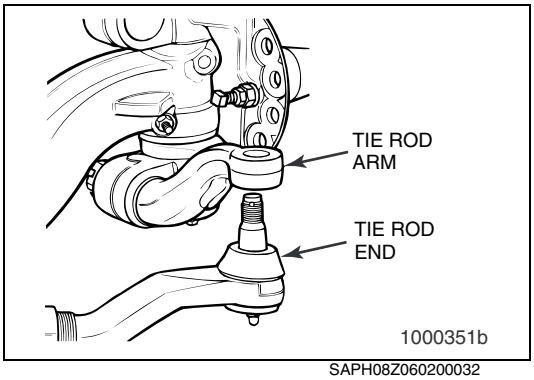

SAPH08Z060200032

(1) Axles with Removable Tie Rod Arms

a. Remove the cotter pins and nuts that fasten each tie rod end to the tie rod arms.

b. Disconnect the cross tube assembly from the tie rod arms. If available, use a tie rod end puller to separate the tie rod end from the tie rod arm.

c. Remove the cotter pin and nut that fastens the tie rod arms in the knuckle.

d. Remove the tie rod arms from the knuckle. If necessary, use a leather or plastic mallet to tap on the end of the rod. Remove the key.

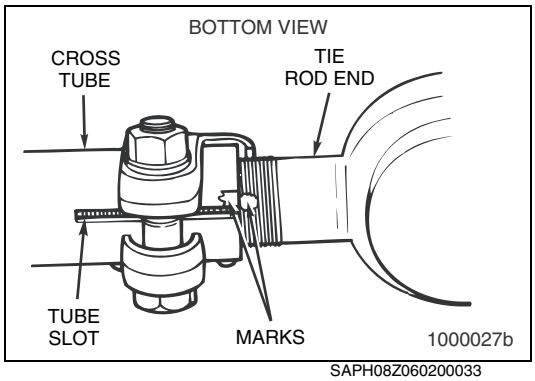

SAPH08Z060200033

e. If necessary, use this procedure to remove the tie rod ends.

a. Mark the position of each tie rod end in the cross tube. Count and record the number of threads that appear outside of the cross tube.

b. Remove the bolts and nuts from the clamp on the cross tube. Rotate the cross tube clamp to remove the nuts and bolts from the clamp.

c. Remove the tie rod ends from the cross tube.

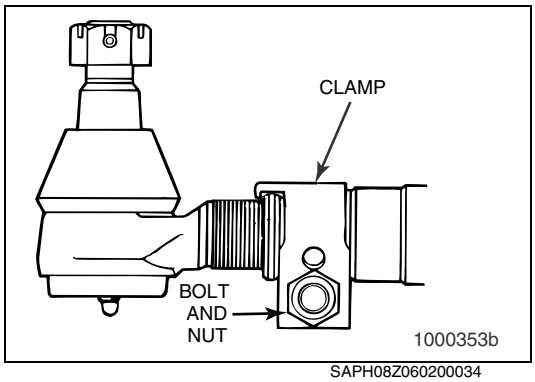

SAPH08Z060200034

f. Inspect the parts. Refer to "INSPECTION" on page AX02-34.

(2) Axles with integral tie rod arms.

a. Remove the cotter pins and nuts that fasten each tie rod end to the tie rod arms.

b. Disconnect the cross tube assembly from the tie rod arms. If available, use a tie rod end puller to separate the tie rod end from the tie rod arm. If necessary, use a leather or plastic mallet to tap on the tie rod end to loosen and remove it.

c. If necessary, use this procedure to remove the tie rod ends.

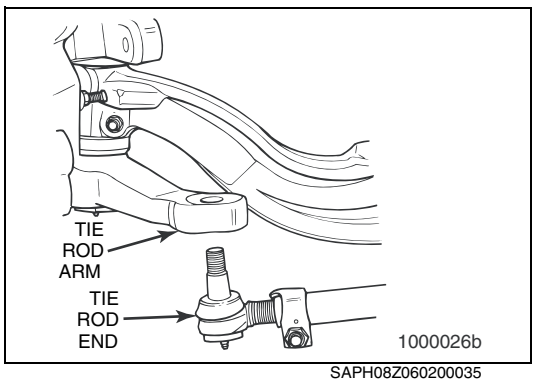

SAPH08Z060200035

1. Mark the position of each tie rod end in the cross tube. Count and record the number of threads that appear outside of the cross tube.

2. Remove the bolts and nuts from the clamp on the cross tube. Rotate the cross tube clamp to remove the nuts and bolts from the clamp.

3. Remove the tie rod ends from the cross tube.

d. Inspect the parts. Refer to "INSPECTION" on page AX02-34.

**5. DRAW KEYS, KING PIN CAPS, KING PINS AND STEERING KNUCKLE**

(1) Axles with bolt-on king pin caps.

a. Remove the wheel ends as described in this section.

b. Vent the air from the brake system. Disconnect the air lines from the brakes.

c. Remove the brake components.

d. Remove the tie rod arms and the steering arm from the knuckle. Refer to the procedure in this section.

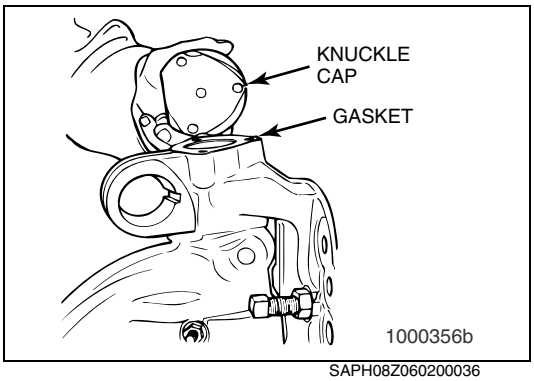

SAPH08Z060200036

e. Remove the capscrews that fasten the king pin caps to the top and the bottom of the knuckle. Remove the caps and the gasket.

f. Remove the plain or the threaded draw keys. Refer to below Table.

**Threaded or Plain Draw Keys**

| Threaded Draw Keys | Plain Draw Keys |
|---|---|
| All other axle models | FC-901, FC-921, FE-970, FF-971 and FL-901 |

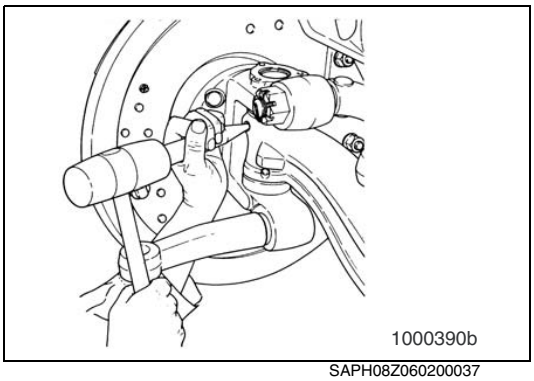

SAPH08Z060200037

- **For plain draw keys:** Use a brass hammer and a steel drift to remove the draw key. Place the drift onto the small, "D"-shaped end of the key.

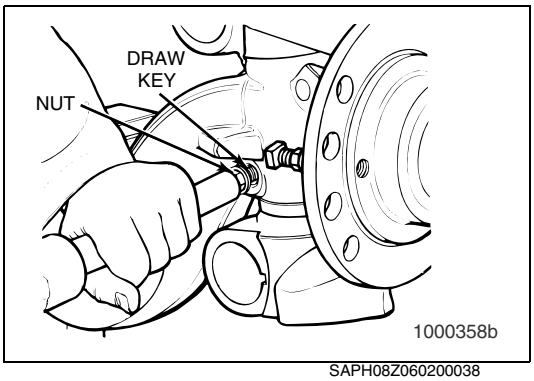

SAPH08Z060200038

- **For threaded draw keys:** Perform the following procedure.

g. Loosen the threaded draw key lock nut until the top of the lock nut is even with the end of the draw key.
h. Use a brass drift and a hammer to hit the end of the draw key.
i. Remove the nut from the draw key. Remove the draw key from the knuckle.
j. If you're not replacing the bushings, use the following procedure to prevent damaging the bushings during king pin removal.
k. Use a brass drift and a hammer to remove the king pins from the knuckle.
l. Remove any flaring on the drift that touches the bushings.
m. Wrap tape to a thickness of 1/16-inch (1.5 mm) onto the end of the drift.
n. If the king pin is hard to remove, use a hydraulic king pin remover. Refer to "Special Tools" in Section 11. To obtain this tool, refer to the Service Notes page on the front inside cover of this manual.

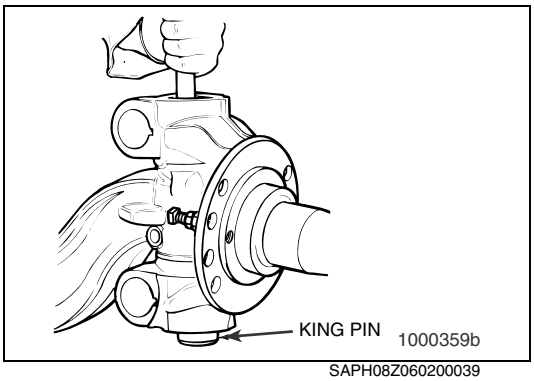

SAPH08Z060200039

o. Remove the knuckle from the axle beam.

**⚠ WARNING**
**Wear gloves when you remove or install shims. Shims have sharp edges that can cause serious personal injury.**

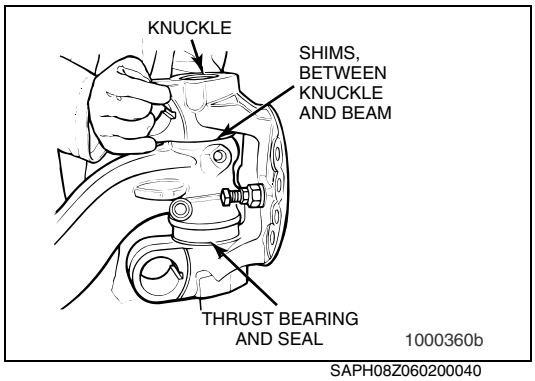

SAPH08Z060200040

p. While wearing gloves, remove the shims, the thrust bearing and the seal from the beam and knuckle.

q. Inspect the parts. Refer to "INSPECTION" on page AX02-34.

(2) Axles with threaded king pin caps.

a. Remove the wheel end as described in this section.

b. Vent the air from the brake system. Disconnect the air lines from the brakes.

c. Remove the brake components. Refer to the brake manufacturer's procedures.

d. Remove the steering arm from the knuckle, if applicable.

e. Remove the top and bottom king pin caps.

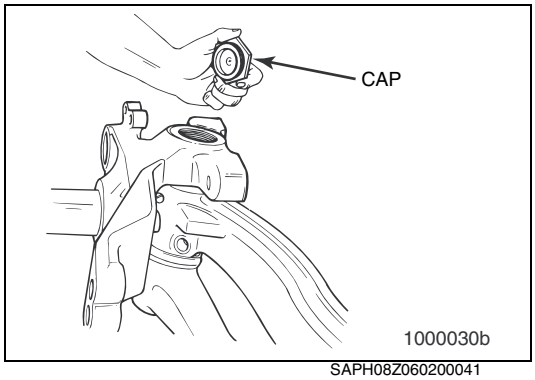

SAPH08Z060200041

f. Use the following procedure to remove the upper and lower draw keys from the knuckle.

g. Loosen the draw key nut. Use a brass drift and a hammer to hit the end of the draw key.

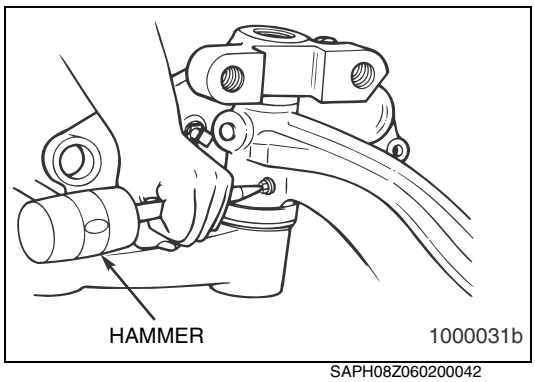

SAPH08Z060200042

h. Remove the nut from the draw key. Remove the draw key from the knuckle.

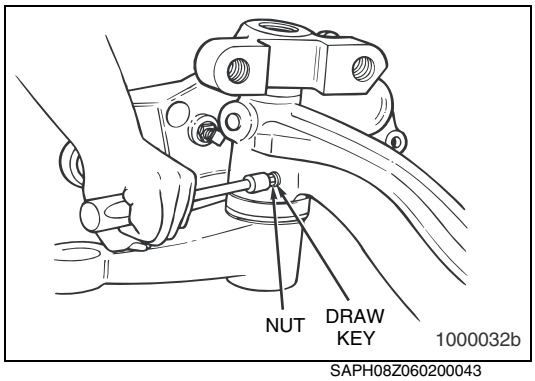

SAPH08Z060200043

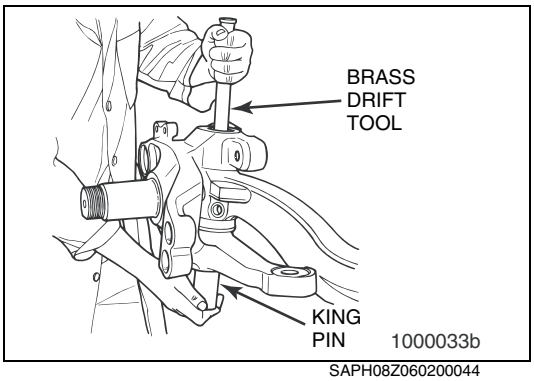

SAPH08Z060200044

i. If you're not replacing the bushings, use the following procedure to prevent damage to the bushings during king pin removal.

j. Use a hammer and brass drift to remove the king pins from the knuckle.

k. Remove any flaring on the drift that touches the bushings.

l. Wrap tape to a thickness of 1/16-inch (1.5 mm) onto the end of the drift.

m. If the king pin is hard to remove, use a hydraulic king pin remover. Refer to "Special Tools" on page AX02-11. To obtain this tool, refer to the "Service Notes" on page AX02-10.

**⚠ WARNING**

**Wear gloves when you remove or install shims. Shims have sharp edges that can cause serious personal injury.**

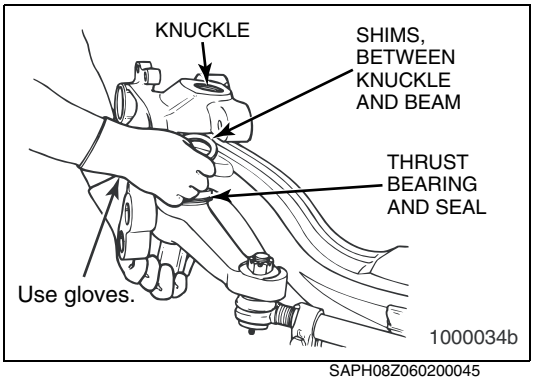

SAPH08Z060200045

n. While wearing gloves, remove the integral thrust bearing and seal, and the shims from the beam and knuckle.

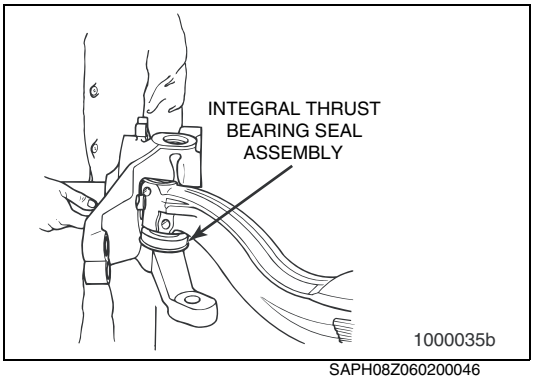

SAPH08Z060200046

o. Remove the knuckle from the axle beam. Inspect the parts. Refer to "INSPECTION" on page AX02-34.

### 6. KING PIN BUSHINGS

**⚠ WARNING**
**Observe all warnings and cautions provided by the press manufacturer to avoid damage to components and serious personal injury.**

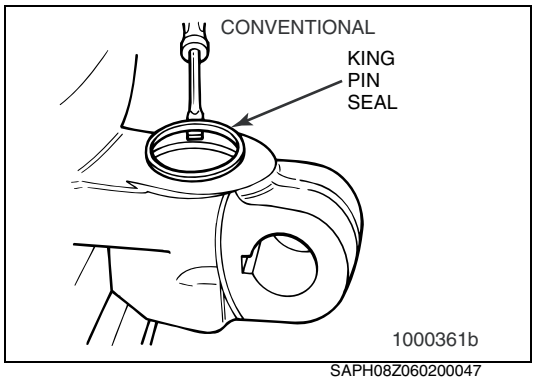

SAPH08Z060200047

(1) Axles with Conventional Wheel Ends — Nylon Bushings

a. Remove and discard the lower king pin seal.
b. Turn the knuckle upside down and remove the upper king pin seal. Remove the old bushings.

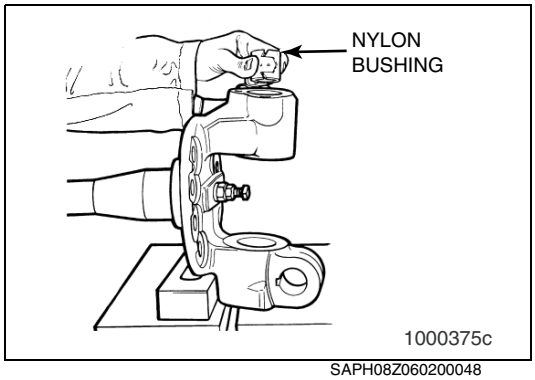

SAPH08Z060200048

c. Remove the top and the bottom bushings from the knuckle bore.

(2) Axles with Conventional Wheel Ends — Easy Steer™ and Bronze Bushings

a. Remove and discard the lower king pin seal.
b. Turn the knuckle upside down and remove the upper king pin seal. Remove the old bushings.

**NOTICE**
**For some axles, you can remove the bushings with a bushing service kit. Refer to "Special Tools" on page AX02-11.**

c. Make a tool to remove the bushings. Refer to "Special Tools" on page AX02-11.

d. Place the knuckle in a vise. Use a press with a five-ton capacity. The knuckle must not move when the bushings are removed.
e. Install the tool into the upper king pin bushing. Press the upper king pin bushing from the knuckle bore.
f. Turn the knuckle upside down and install the tool into the lower king pin bushing. Press the lower bushing from the knuckle bore.

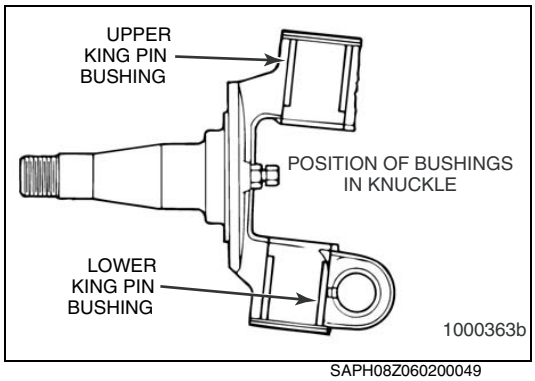

SAPH08Z060200049

# PREPARE PARTS FOR ASSEMBLY

EN08Z0602A100004

## REPLACE

**1. WORN OR DAMAGED PARTS**

Do not repair or recondition front axle components. Replace damaged or out-of-specification components. All major components are heat-treated and tempered.

Do not perform the following operations on front axle components.

- Weld steering arms, tie rod arms, knuckles, king pins, axle beams, tie rod assemblies, hubs, drums or brakes.
- Hot- or cold-bend the knuckles, steering arms, tie rod arms, ball studs, axle beams or tie rod assemblies.
- Drill holes in the axle beam for the king pins.
- Drill draw key holes in the knuckle.
- Spray-weld bearing diameters onto the knuckles or into the machined bores.
- Disassemble the unitized wheel end.
- Mill or machine any components.

**⚠ WARNING**

**Solvent cleaners can be flammable, poisonous and cause burns. Examples of solvent cleaners are carbon tetrachloride, and emulsion-type and petroleum-base cleaners. Read the manufacturer's instructions before using a solvent cleaner, then carefully follow the instructions. Also follow the procedures below.**

- **Wear safe eye protection.**
- **Wear clothing that protects your skin.**
- **Work in a well-ventilated area.**
- **Do not use gasoline, or solvents that contain gasoline. Gasoline can explode.**
- **You must use hot solution tanks or alkaline solutions correctly. Read the manufacturer's instructions before using hot solution tanks and alkaline solutions. Then carefully follow the instructions.**

**⚠ CAUTION**

**Do not use hot solution tanks or water and alkaline solutions to clean ground or polished parts. Damage to parts can result.**

**2. CLEAN, DRY AND INSPECT PARTS**

(1) Ground or Polished Parts

Use a cleaning solvent to clean the ground or polished parts and surfaces. Kerosene or diesel fuel can be used for this purpose. DO NOT USE GASOLINE.

Do NOT clean ground or polished parts in a hot solution tank or with water, steam or alkaline solutions. These solutions will cause corrosion of the parts.

(2) Rough Parts

Rough parts can be cleaned with the ground or polished parts. Rough parts also can be cleaned in hot solution tanks with a weak alkaline solution. Parts must remain in the hot solution tanks until they are completely cleaned and heated.

(3) Dry Cleaned Parts
Parts must be dried immediately after cleaning. Dry parts with clean paper or rags, or compressed air. Do not dry bearings by spinning with compressed air.

(4) Prevent Corrosion on Cleaned Parts
Apply a light oil to cleaned and dried parts that are not damaged and are to be immediately assembled. Do NOT apply oil to the brake linings or the brake drums.

If the parts are to be stored, apply a good corrosion preventative to all surfaces. Do NOT apply the material to the brake linings or the brake drums. Store the parts inside special paper or other material that prevents corrosion.

**NOTICE**
**All tapered joints must be clean and dry with no lubrication or corrosion preventative applied to the mating surfaces.**

## INSTALLATION

**1. NEW FASTENERS WITH PRE-APPLIED ADHESIVE PATCHES**

(1) Clean the oil and dirt from the threaded holes. Use a wire brush to remove the old patch material. There is no special cleaning required.

**⚠ CAUTION**

**Do not apply adhesives or sealants onto new fasteners with pre-applied adhesive patches or into the threaded holes. If other adhesives or sealants are used, the new adhesive will not function correctly. Damage to components can result.**

(2) Assemble the parts using the new pre-applied adhesive fasteners.

**NOTICE**

**There is no drying time required for fasteners with pre-applied adhesive.**

(3) Tighten the fasteners to the required torque value for that size fastener. Refer to "Front Non-Drive Axles with Conventional Wheel Ends", "Torque Specifications" on page AX02-8.

**2. ORIGINAL OR USED FASTENERS USING MERITOR SPECIFICATION 2297-C-7049 LIQUID ADHESIVE, LOCTITE® 680 ADHESIVE OR EQUIVALENT**

**⚠ WARNING**

**Take care when you use Loctite® adhesive to avoid serious personal injury. Read the manufacturer's instructions before using this product. Follow the instructions to prevent irritation to the eyes and skin. If Loctite® adhesive material gets into your eyes, follow the manufacturer's emergency procedures. Have your eyes checked by a physician as soon as possible.**

(1) Clean the oil, dirt and old adhesive from all threads and threaded holes. Use a wire brush.

**⚠ CAUTION**

**Do not apply adhesive to the fastener threads. Air pressure in the hole will push the adhesive out as the fastener is installed. Damage to components can result.**

**NOTICE**

**There is no drying time required for Meritor specification 2297-C-7049 liquid adhesive, Loctite® 680 adhesive or equivalent.**

(2) Apply four or five drops of Meritor liquid adhesive, Loctite® 680 adhesive or equivalent into each threaded hole or bore only.

(3) Tighten the fasteners to the required torque value for that size fastener. Refer to "Front Non-Drive Axles with Conventional Wheel Ends", "Torque Specifications" on page AX02-8.

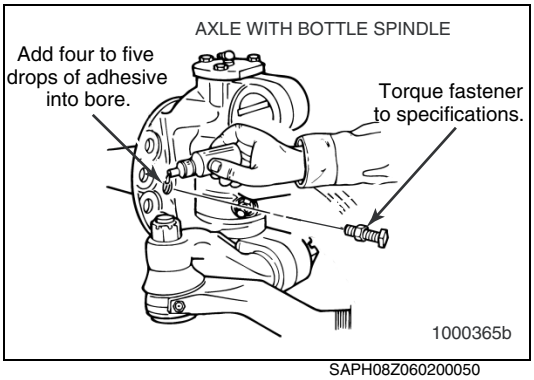


SAPH08Z060200050

**3. CHECK THE TORQUE VALUES OF DRI-LOC®, FASTENERS NOT REQUIRING REMOVAL**

If Dri-Loc® fasteners do not require removal from components, use the following procedure to check the fasteners for the correct torque value.

Apply the minimum amount of torque required for that size fastener. Refer to page AX02-8. The fastener must not rotate.

- **If the fastener rotates:** Remove the fastener from the component. Inspect the fastener and the hole for wear and damage. Repair as necessary.
- **If the fastener and the hole are in good condition:** Apply adhesive into the threaded hole. Follow the procedure to install old Dri-Loc® fasteners.

## INSPECTION

### 1. AXLES WITH CONVENTIONAL AND UNITIZED WHEEL ENDS

**⚠ WARNING**
**Use only dye penetrant inspection techniques on unitized wheel-end hub units. Be careful not to get penetrant fluids into the bore of the hub unit. Do not use fluid immersion-based crack inspection techniques. The fluids can enter the joint between the inner bearing cones through the bore of the hub unit and damage the lubricant. Serious personal injury and damage to components can result.**

Refer to the following guidelines to carefully inspect all disassembled parts before assembly.

(1) Inspect and replace any parts that are worn, cracked or damaged. Check for cracks using dye penetrant, magnetic flux or fluorescent particle testing methods. Follow the inspection product manufacturer's procedures.

(2) Remove the old bushing from the knuckle. Measure the upper knuckle bore inside diameter at two locations. Always use a micrometer and a telescoping gauge when taking knuckle bore measurements. Some rounding of the top and bottom bore edges is acceptable.

(3) Measure the bore in four positions and at two locations. The two locations must be 90 degrees opposite each other.

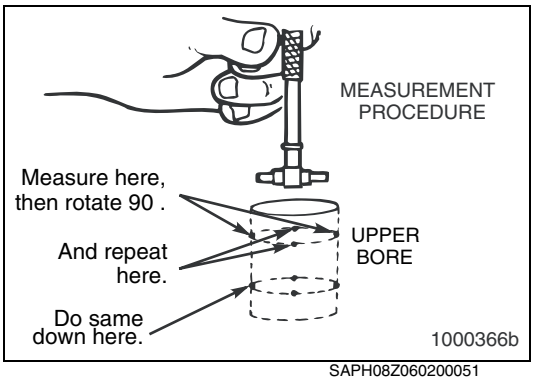

SAPH08Z060200051

- **If the average measurement is more than the knuckle bore maximum diameter specification on page AX02-35:** Replace the knuckle.

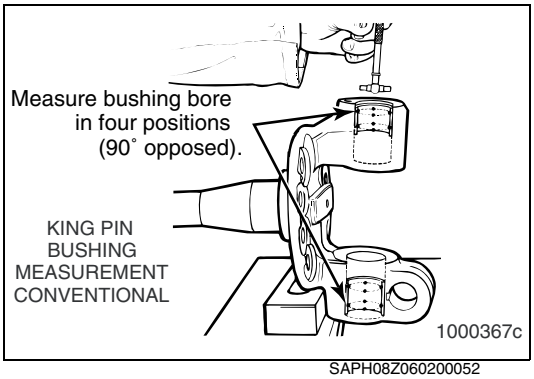

SAPH08Z060200052

(4) Repeat this procedure for measuring the lower knuckle bore. Refer to the knuckle bore maximum diameter on page AX02-35.

- **If measurements at either the upper or lower knuckle bores exceed the knuckle bore maximum diameter on page AX02-35:** Replace the knuckle.

(5) Measure the king pin bushing inside diameter using a micrometer and a telescoping gauge.

- **If the average inside diameter measurement is greater than the king pin bushing maximum inner diameter on page AX02-35:** Install a new bushing.

(6) Measure the inner diameter of the new bushing after installation and reaming in four positions and at two locations. The two locations must be 90 degrees opposite each other.

- **If the average measurement is more than the king pin bushing maximum inner diameter specification on page AX02-35:** Replace the bushing.

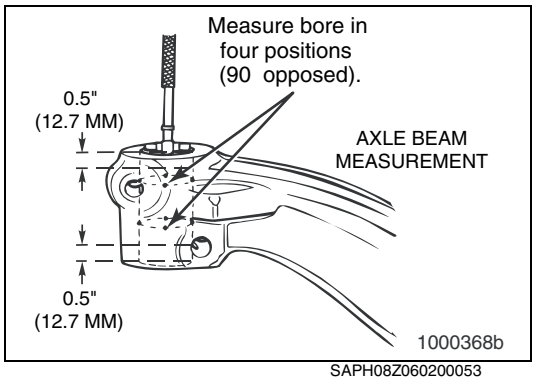

SAPH08Z060200053

(7) Measure the inner bore diameter of the axle beam. Rounding at the top and bottom of the beam is acceptable. Measure the axle beam bore at four positions and at two locations. Refer to the guidelines below.

a. 0.5-inch (12.7 mm) below the top of the bore.
b. 0.5-inch (12.7 mm) above the bottom of the bore.

- **If the average measurement is greater than the axle beam bore maximum diameter in Table D:** Replace the entire axle beam.

**Axle Wear Limits Specifications**

| Model Number | Knuckle Bore Maximum Diameter | Axle Beam Bore Maximum Diameter | King Pin Bushing Maximum Inner Diameter |
|---|---|---|---|
| **MFS 8** | **1.6295 in. (41.389 mm)** | **1.5040 in. (31.4450 mm)** | **1.5020 in. (38.1510 mm)** |
| **MFS 10** | **1.9220 in. (41.389 mm)** | **1.7960 in. (45.6180 mm)** | **1.7980 in. (45.6692 mm)** |
| **MFS 12** | | | |
| **MFS 14** | | | |

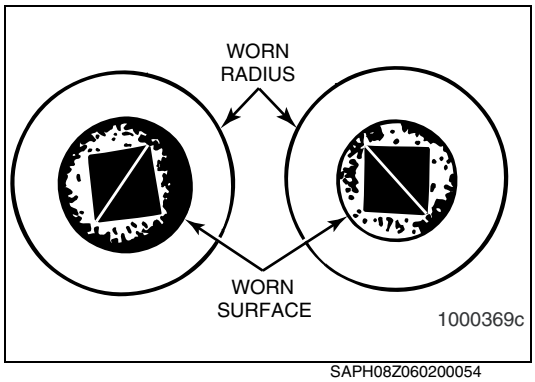

SAPH08Z060200054

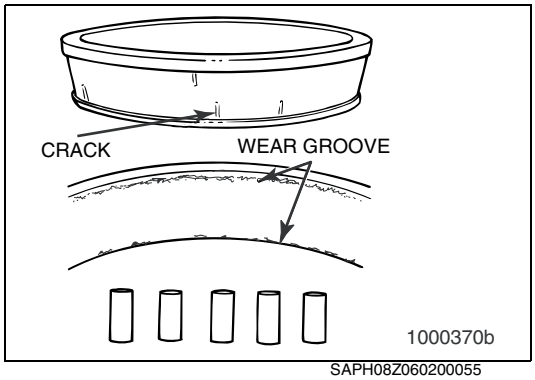

SAPH08Z060200055

**2. WHEEL BEARINGS**

(1) Axles with Conventional Wheel Ends

Inspect the wheel bearings when the hub is removed from the knuckle spindle.

Remove all lubricant from the bearings, knuckle, hub and hubcap.

Inspect the cup, the cone and the rollers and cage of all bearings. If any of the following conditions exist, you must replace the bearing.

- The center of the large diameter end of the rollers is worn level or below the outer surface.
- The radius at the large diameter end of the rollers is worn to a sharp edge.
- There is a visible roller groove in the cup or the cone inner race surfaces. The groove can be seen at the small or large diameter end of both parts.
- There are deep cracks or breaks in the cup, the cone inner race or the roller surfaces.
- There are bright wear marks on the outer surface of the roller cage.
- There is damage on the rollers and on the surfaces of the cup and the cone inner race that touch the rollers.
- There is damage on the cup and the cone inner surfaces that touch the rollers.

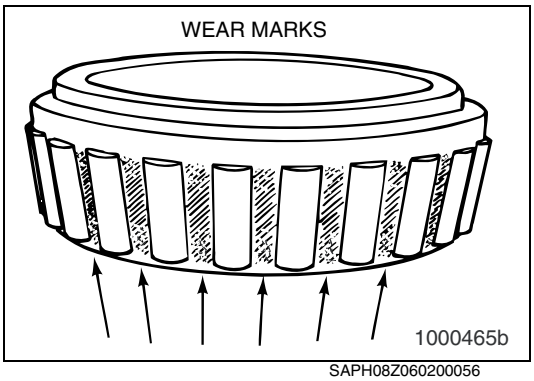


SAPH08Z060200056

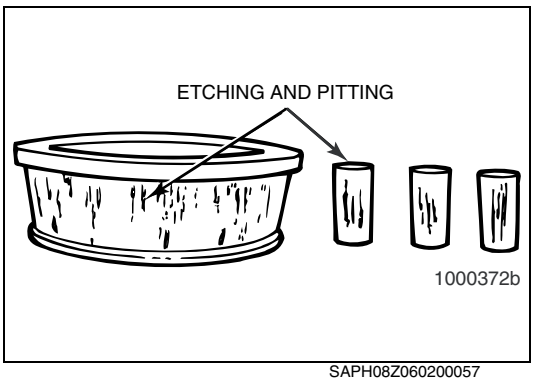


SAPH08Z060200057

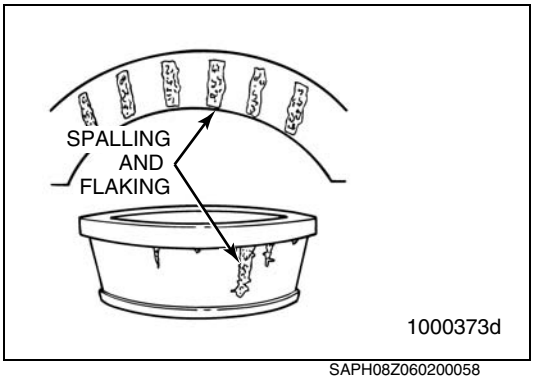


SAPH08Z060200058

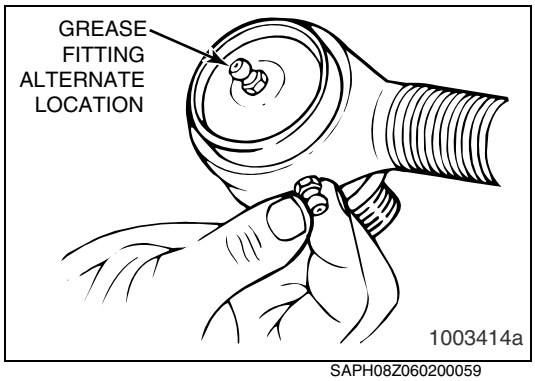

SAPH08Z060200059

**3. TIE ROD GREASE FITTINGS**

(1) If a grease fitting is missing, install a new one. Do not install a fitting if the tie rod end is a non-greaseable design.

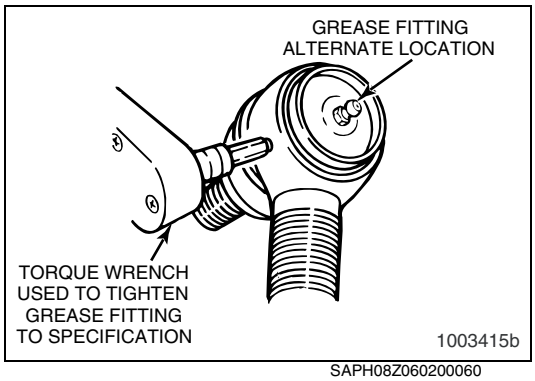

SAPH08Z060200060

(2) Tighten all grease fittings to 10 lb-ft (13.558 N·m).

# ASSEMBLY

EN08Z0602H200002

## KING PIN BUSHINGS

### 1. BRONZE AND EASY STEER™ — KING PIN BUSHING INSTALLATION WITHOUT A PRESS AXLES WITH CONVENTIONAL

**NOTICE**

**For some axles you can install the bushings without a press. Use a bushing service kit to install and ream the bushings. Refer to "Special Tools" on page AX02-11.**

Bronze and Easy Steer™ bushings have an interference fit in the knuckle bores and require a bushing installation tool. Refer to "Special Tools" on page AX02-11. To obtain this tool, refer to the "Service Notes" on page AX02-10.

(1) Place the new bushing into the upper knuckle bore. On MFS-8 front axle, the bushing hole must be aligned with the grease fitting hole in the knuckle bore.

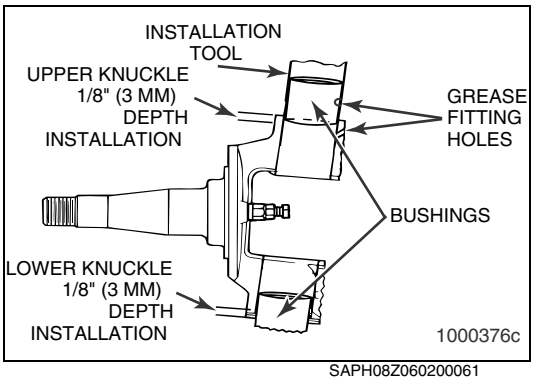


SAPH08Z060200061

(2) Use the installation tool to start the bushing 1/8-inch (3 mm) STRAIGHT into the upper bore.

a. On Easy Steer™ bushings and for MFS axles, press the bushing to a depth of 0.352-0.382-inch (8.94-9.70 mm) below the top of the upper knuckle bore or until the grease fitting holes are aligned.

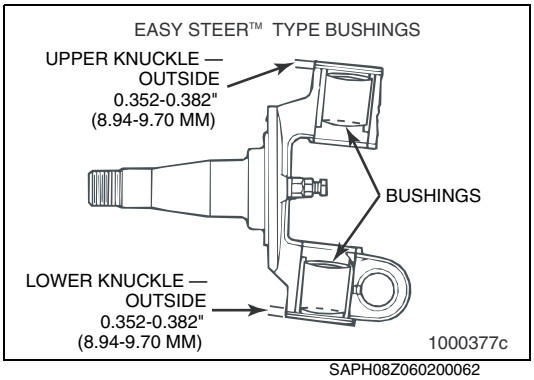


SAPH08Z060200062

b. On bronze bushings, press the bushing to a depth of 0.135-0.165-inch (3.5-4.0 mm) above the bottom of the upper bore.

(3) Turn the knuckle over so that the bottom of the knuckle is UP. The bore must be parallel to the top of the press.

(4) Place the new bushing into the lower knuckle bore. On MFS-8 front axle, the bushing hole must be aligned with the grease fitting hole in the knuckle bore.

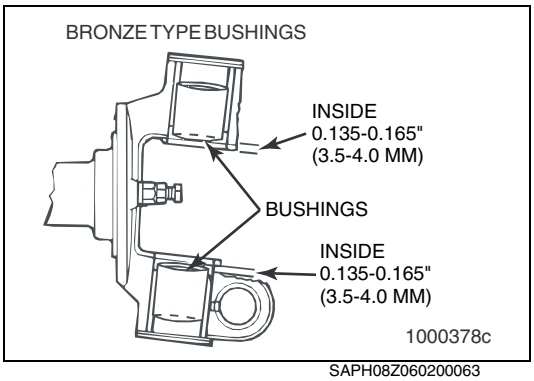


SAPH08Z060200063

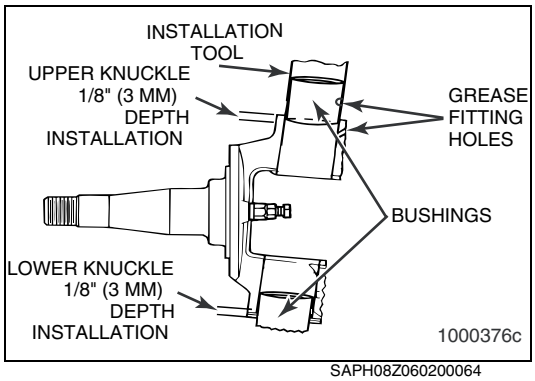

SAPH08Z060200064

(5) Use the installation tool to start the bushing 1/8-inch (3.0 mm) STRAIGHT into the lower bore.

a. On Easy Steer™ bushings and for MFS axles, press the bushing to a depth of 0.352-0.382-inch (8.94-9.70 mm) below the top of the lower knuckle bore, as viewed with the knuckle upside down or until the grease fitting holes are aligned.
b. On bronze bushings, press the bushing to a depth of 0.135-0.165-inch (3.5-4.0 mm) above the bottom of the lower bore, as viewed with the knuckle upside down.

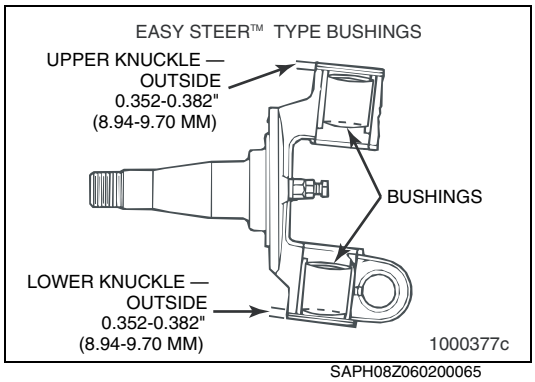

SAPH08Z060200065

(6) Ream the bushings. Refer to "Ream the King Pin Bushings" on page AX02-40.

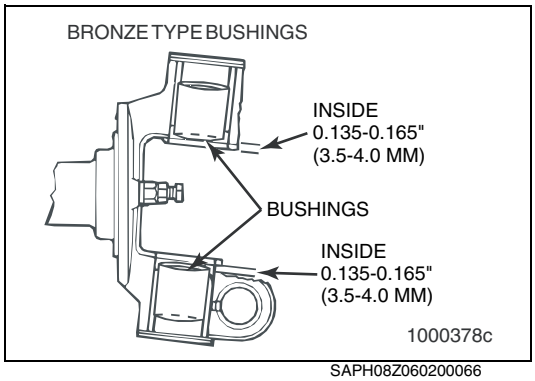

SAPH08Z060200066

**2. BRONZE AND EASY STEER™ KING PIN BUSHING INSTALLATION WITH A PRESS — AXLES WITH CONVENTIONAL AND UNITIZED WHEEL ENDS**

(1) Install the top king pin bushing first.

**⚠ WARNING**

**Observe all warnings and cautions provided by the press manufacturer to avoid damage to components and serious personal injury.**

(2) Place the knuckle in a press with the top of the knuckle toward the top of the press. The top of the bores must be parallel to the top of the press.
(3) Place the new bushing into the upper knuckle bore. On MFS-8 front axle, the bushing hole must be aligned with the grease fitting hole in the knuckle bore.
(4) Use the installation tool to press the bushing 1/8-inch (3.0 mm) STRAIGHT into the upper bore. Release the pressure.
   a. On Easy Steer™ bushings and for MFS axles, press the bushing to a depth of 0.352-0.382-inch (8.94-9.70 mm) below the top of the upper knuckle bore or until the grease fitting holes are aligned.
   b. On bronze bushings, press the bushing to a depth of 0.135-0.165-inch (3.5-4.0 mm) above the bottom of the upper bore.
(5) Turn the knuckle over so that the bottom of the knuckle is UP. The bore must be parallel to the top of the press.
(6) Place the new bushing into the lower knuckle bore. On MFS-8 front axle, the bushing hole must be aligned with the grease fitting hole in the knuckle bore.
(7) Use the installation tool to start the bushing 1/8-inch (3.0 mm) STRAIGHT into the lower bore. Release the pressure.
   a. On Easy Steer™ bushings and for MFS axles, press the bushing to a depth of 0.352-0.382-inch (8.94-9.70 mm) below the top of the lower knuckle bore, as viewed with the knuckle upside down or until the grease fitting holes are aligned.

b. On bronze bushings, press the bushing to a depth of 0.135-0.165-inch (3.5-4.0 mm) above the bottom of the lower bore, as viewed with the knuckle upside down.

(8) Ream the bushings. Refer to "Ream the King Pin Bushings", "Installation" below.

### 3. REAM THE KING PIN BUSHINGS

(1) Axles with Conventional and Unitized Wheel Ends — Bronze and Easy Steer™ Bushings

**⚠ CAUTION**
**Use a fixed reamer to ream the king pin bushings. Do not hone or burnish the bushings. Damage to the bushings will result.**

**NOTICE**
**Reamer tools are available from SPX Kent-Moore. Refer to "Special Tools" on page AX02-11. To obtain these tools, refer to the "Service Notes" on page AX02-10.**

a. Place the knuckle in a vise with brass jaws.

b. Slide the pilot of the reamer through the top bushing until the reamer blades touch the bushing.

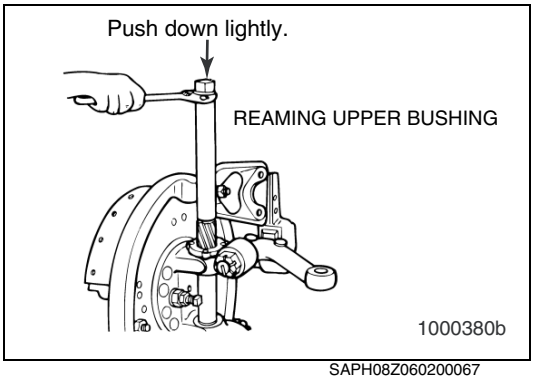

SAPH08Z060200067

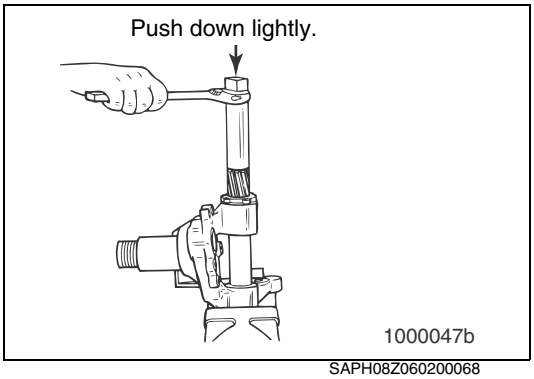

SAPH08Z060200068

(2) Rotate the reamer with a light DOWNWARD pressure. Do not apply too much force. Rotate the reamer smoothly.

(3) After cutting the top bushing, guide the reamer into the bottom bushing. Do not allow the tool to drop to the bottom bushing. Repeat Step (2) and Step (3).

(4) Slide the reamer out of the bottom bushing.

- **If the reamer must be removed through the top bushing:** Rotate the tool in the opposite cutting direction.

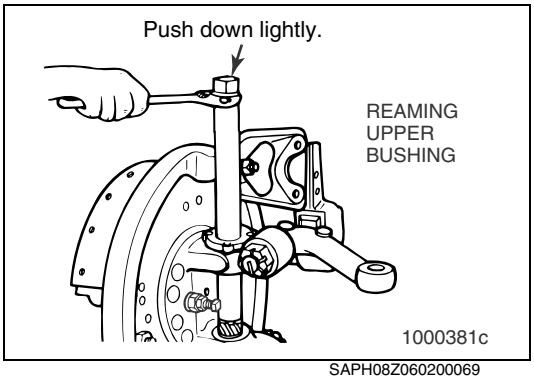

SAPH08Z060200069

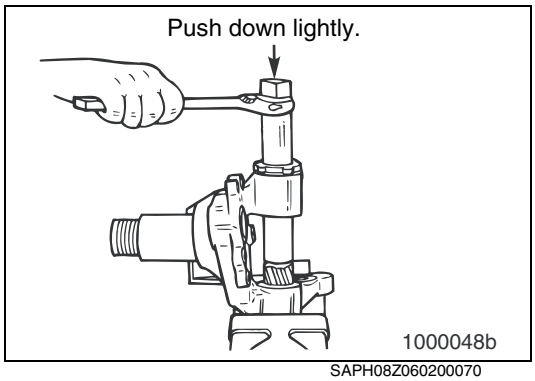

SAPH08Z060200070

(5) Clean all material from the bushings.

**4. INNER KNUCKLE BORE KING PIN SEALS**

(1) Axles with Conventional Wheel Ends

a. Place the top of the knuckle into a vise with brass jaws. The bottom of the knuckle must be TOWARD you.
b. Place the seal into the bottom of the top knuckle bore. The lip of the seal must be AWAY from the bore.

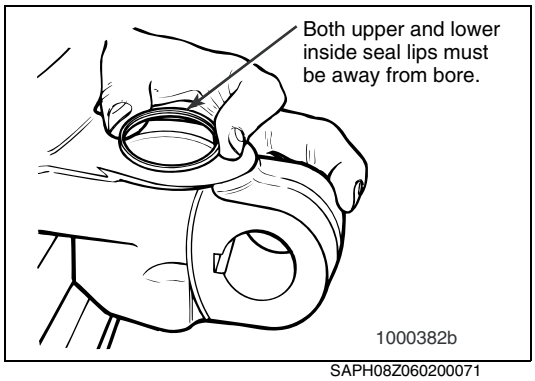

SAPH08Z060200071

c. Place the end cap for the knuckle on top of the seal. Slide the king pin through the opposite knuckle bore. Use the king pin to install the seal.

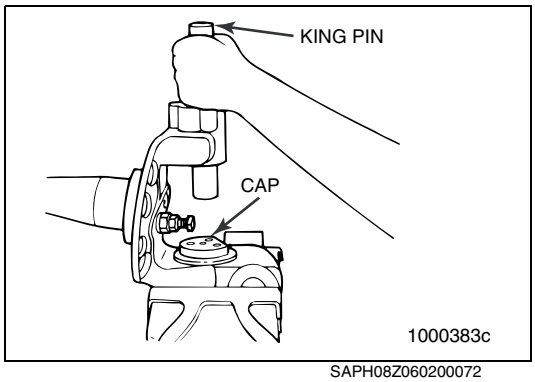

SAPH08Z060200072

- **For bronze bushings:** The bottom of the seal must touch the bushing.

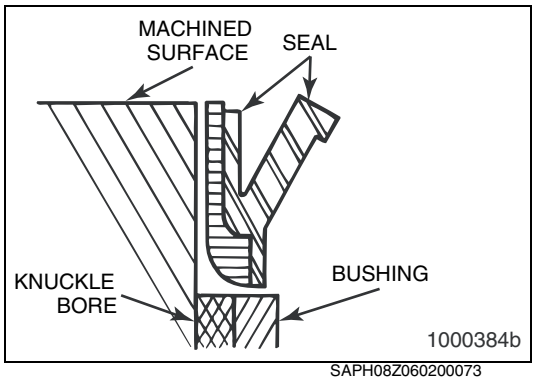

SAPH08Z060200073

- **For Easy Steer™ and nylon bushings:** The top of the seal must be even with the top of the knuckle.

d. Turn the knuckle over in the vise. The jaws of the vise must hold the bottom of the knuckle, and the top of the knuckle must be toward you.
e. Place the seal into the top of the bottom knuckle bore. The lip of the seal must be AWAY from the bore.
f. Repeat Step "C" of this procedure.
g. After installing the Easy Steer™ bushings, the top of the seal must be even with the inner machined surface of each knuckle bore.
h. Turn the knuckle over to the UP position. Place the seal lightly into the inner bore. The seal lip must be AWAY from the bore.
i. Use a seal installer tool to press the seal firmly into the knuckle bore. The top of the seal must be even with the inner machined surface of each knuckle bore.

**5. KNUCKLE TO THE AXLE BEAM**

**⚠ WARNING**
**Use a brass or leather mallet for assembly and disassembly procedures. Do not hit steel parts with a steel hammer. Pieces of a part can break off Serious personal injury and damage to components can result.**

(1) Axles with Conventional Wheel Ends

a. Clean the bores of the knuckle and the axle beam.

**NOTICE**
**The one-piece thrust bearing with an integrated grease seal is completely interchangeable with the two-piece design. It has a specified top and bottom orientation.**

b. Install the seal onto the thrust bearing. The surface with the inner diameter seal must be on the top. The surface with the outer diameter seal must be on the bottom.

a. On cover-type seals: Install the seal over the open end of the bearing.

b. On flat-type seals: Install the seal over the closed part of the bearing.

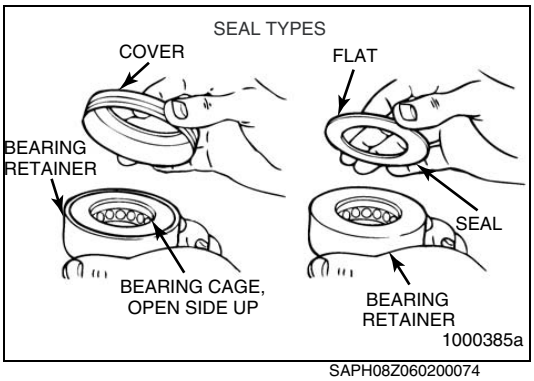

SAPH08Z060200074

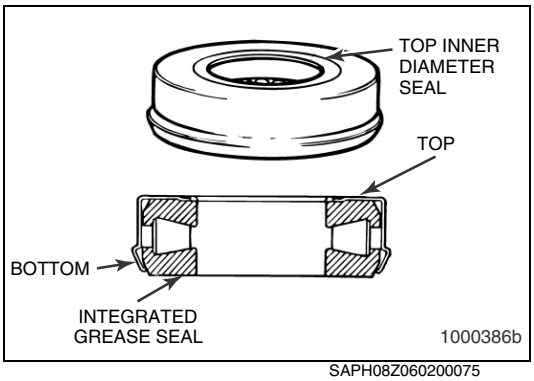

SAPH08Z060200075

c. Install the seal and thrust bearing assembly on the inner knuckle. The seal must face UPWARD toward the beam. The top inner diameter will contact the bottom of the axle beam.

**⚠ WARNING**
**Wear gloves when you install the shims. Shims have sharp edges that can cause serious personal injury.**

d. Inspect the shims for damage before installation.

a. Replace damaged shims with the same size shims, or in combination, that allow the least amount of knuckle end play.

b. If a new shim pack is required, select the amount of shims that will give the least amount of end play.

e. After inspection, place the shims on top of the axle beam bore machined surface. Align the shims for king pin installation.

f. Place the knuckle onto the axle beam.

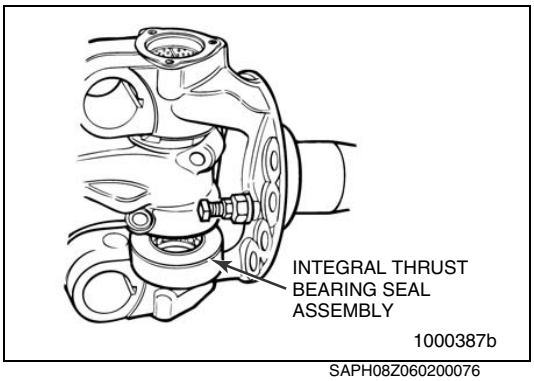

SAPH08Z060200076

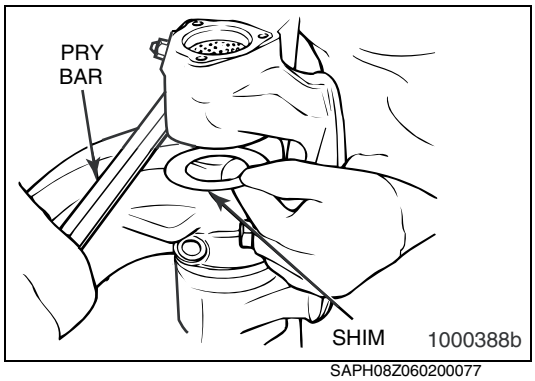

SAPH08Z060200077

g. Place a pry bar between the steering arm boss and the axle beam. Lift the knuckle and slide the shim pack between the top of the beam and the knuckle.

h. Align all the bores. If the bores are not aligned, the parts will be damaged when the king pin is installed.

i. Remove the pry bar.

j. Before installing the king pin into the top of the knuckle, apply the multi-purpose grease onto the bottom half of the king pin.

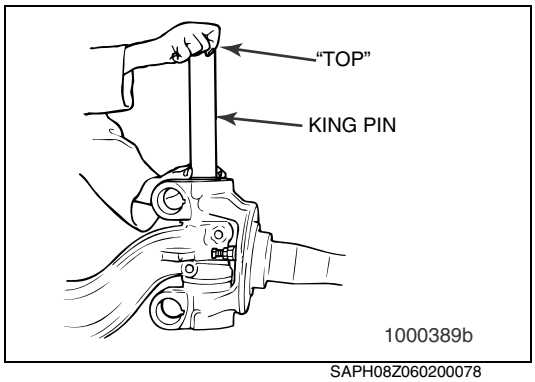

SAPH08Z060200078

k. Verify that you can see the word "TOP," which is stamped on the king pin.

l. Rotate the king pin so that the two draw key slots of the pin correctly align with the draw key slots in the knuckle.

m. Install the king pin into the TOP of the knuckle and through the area where the shims are located. Do not force the pin through the top bushing.

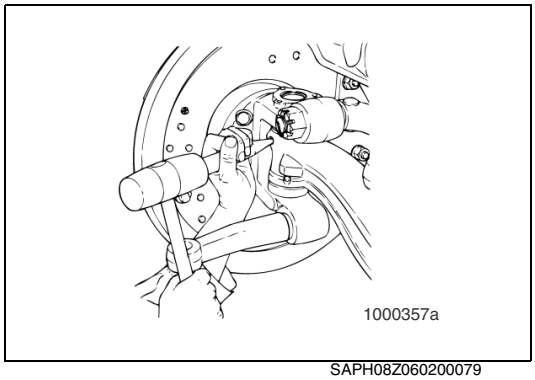

SAPH08Z060200079

n. If required, use a hammer and a brass drift to apply direct force to the king pin for seating it into the lower knuckle bore.

o. Seat the top draw key into the front of the beam. Refer to Table below. Seat the bottom draw key into the back of the beam by striking it with a hammer and drift. The keys must align with the slots of the king pin. Do not install or tighten the lock nuts before checking the knuckle end play.

**Threaded or Plain Draw Keys**

| Threaded Draw Keys | Plain Draw Keys |
|---|---|
| All other axle models | FC-901, FC-921, FE-970, FF-971 and FL-901 |

**6. CHECK STEER KNUCKLE VERTICAL END PLAY**

(1) Axles with Conventional Wheel Ends

a. Strike the boss of the knuckle with a rubber mallet to move the parts into position.

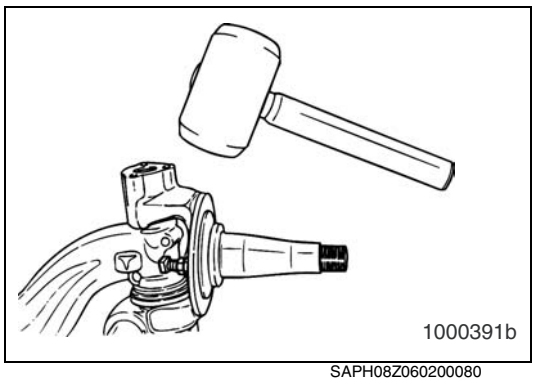

SAPH08Z060200080

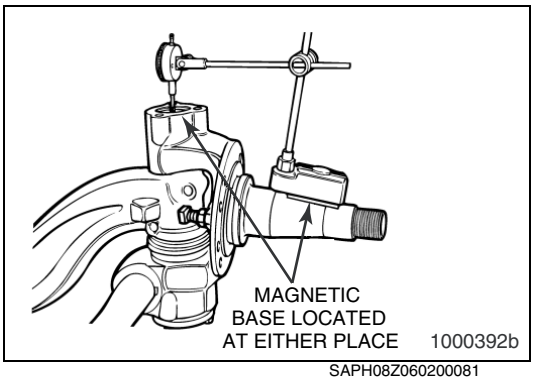

SAPH08Z060200081

b. Turn the knuckle to the straight-ahead position.

c. Attach a dial indicator. Place the base onto the knuckle. Place the tip onto the center of the king pin. Set the dial indicator to ZERO.

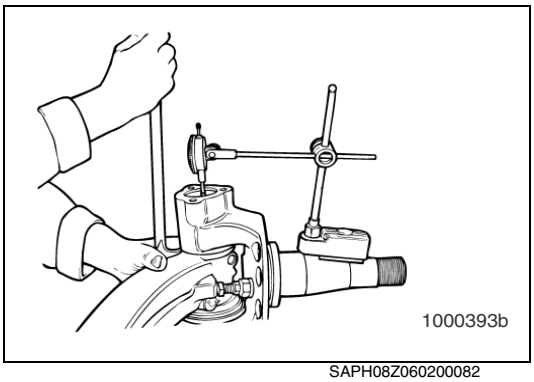

SAPH08Z060200082

d. Use one of the following methods to measure the end play.

- Place a pry bar between the knuckle and the top of the axle center. Push the knuckle up and measure the end play.
- Place a block of wood and a hydraulic jack under the bottom of the knuckle. Raise the knuckle until the pointer on the dial indicator stops.

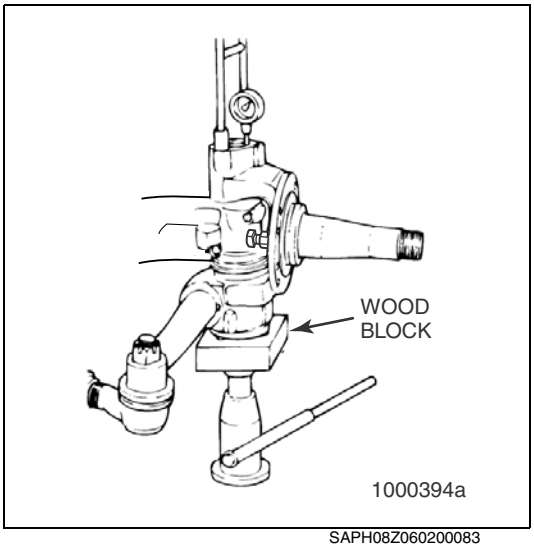

SAPH08Z060200083

e. Repeat Step c and Step d with the axle in the full RIGHT and full LEFT positions.

f. Record the reading on the dial indicator.

- **If the knuckle binds or ZERO end play is measured:** Remove the shims from the shim pack.
- **If the reading is more than the correct specification shown in Table below:** Add shims to the shim pack.

**End Play Specifications**

| | |
|---|---|
| **New or Rebuilt Axles** | **0.001-0.010 inch (0.025-0.254 mm)** |
| **In-Service Axles** | **0.001-0.030 inch (0.025-0.762 mm)** |

**7. DRAW KEY LOCK NUTS**

**⚠ WARNING**
**Use a brass or leather mallet for assembly and disassembly procedures. Do not hit steel parts with a steel hammer. Pieces of a part can break off Serious personal injury and damage to components can result.**

**⚠ CAUTION**
**Verify that the draw key is installed completely or the lock nut is tightened to 30-45 lb-ft (41-61 N·m). If not installed correctly, the king pin and the axle beam will be damaged.**

**Threaded or Plain Draw Keys**

| Threaded Draw Keys | Plain Draw Keys |
|---|---|
| All other axle models | FC-901, FC-921, FE-970, FF-971 and FL-901 |

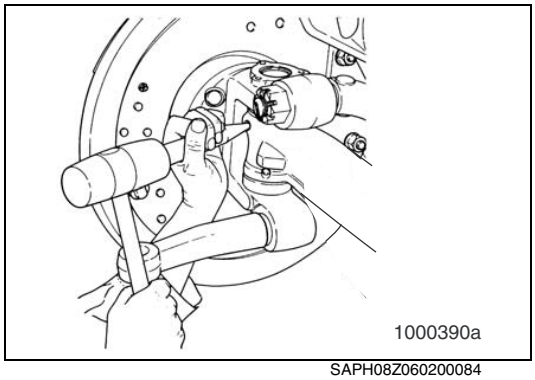

SAPH08Z060200084

(1) Plain Draw Keys — Axles with Conventional and Unitized Wheel Ends

Use a hammer and a brass drift to install the draw key into the axle beam and knuckle. The key must be installed 1/32-1/8-inch (1-3 mm) below the outer surface of the beam.

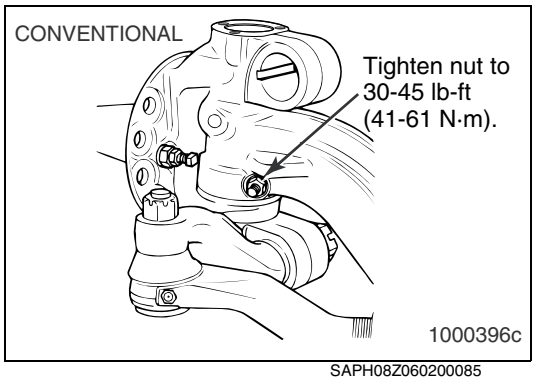

SAPH08Z060200085

(2) Threaded Draw Keys — Axles with Conventional and Unitized Wheel Ends

Install the lock nut and tighten it to 30-45 lb-ft (41-61 N·m).

**8. KING PIN CAPS**

(1) Bolt-On King Pin Caps

a. Install new gaskets and the caps onto the top and the bottom of the knuckle. Install the capscrews and the washers and tighten to 20-30 lb-ft (28-40 N·m).
b. Connect the tie rod arm to the knuckle. Refer to "Tie Rod Arms, Tie Rod Ends and Cross Tube Assembly" on page AX02-47.

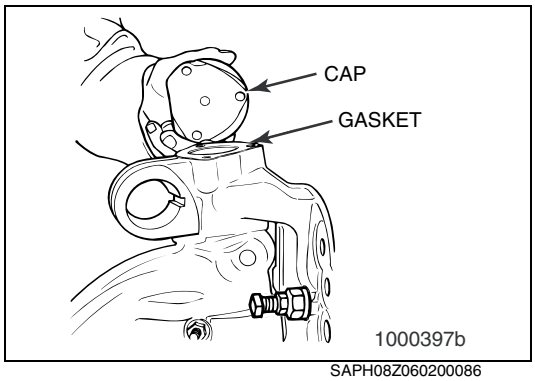

SAPH08Z060200086

(2) Threaded King Pin Caps

**⚠ WARNING**

**When you apply some silicone gasket materials, a small amount of acid vapor is present. To prevent serious personal injury, ensure that the work area is well-ventilated. Read the manufacturer's instructions before using a silicone gasket material, then carefully follow the instructions. If a silicone gasket material gets into your eyes, follow the manufacturer's emergency procedures. Have your eyes checked by a physician as soon as possible.**

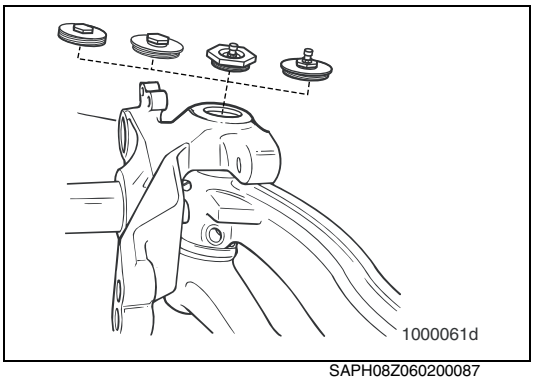

SAPH08Z060200087

a. Apply the sealant, part number 2297-D-7076, onto the threads. To obtain these supplies, refer to the "Service Notes" on page AX02-10.

b. Install the threaded king pin caps onto the top and the bottom of the knuckle.
c. Tighten the king pin caps to 70-90 lb-ft (95-120 N·m).
d. Connect the tie rod end assembly to the integral knuckle arm. Refer to "Tie Rod Arms, Tie Rod Ends and Cross Tube Assembly" on page AX02-47.

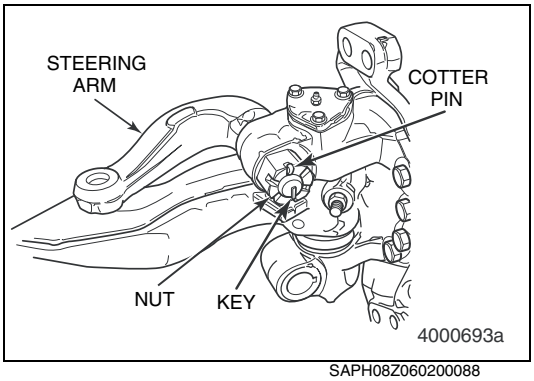

SAPH08Z060200088

**9. AXLES WITH KEYED STEERING ARM**

(1) Press the key into the slot in the arm. Install the steering arm into the knuckle.
(2) Install the nuts. Tighten to the specified torque. Refer to "Front Non-Drive Axles with Conventional Wheel Ends", "Torque Specifications" on page AX02-8.
(3) Install the cotter pins. If necessary, tighten the nut until the holes are aligned. Do not loosen the nut to install the cotter pin.
(4) Lubricate the drag link end that connects to the steering arm. Refer to "Ball Studs on the Steering Arm, the Tie Rod Arm Ends and the Drag Link" on page AX02-61.
(5) Check for correct operation.

**10. AXLES WITH BOLT-ON STEERING ARM**

**⚠ WARNING**
**Take care when you use Loctite® adhesive to avoid serious personal injury. Read the manufacturer's instructions before using this product. Follow the instructions carefully to prevent irritation to the eyes and skin. If Loctite® adhesive material gets into your eyes, follow the manufacturer's emergency procedures. Have your eyes checked by a physician as soon as possible.**

(1) Use a wire brush to remove old Loctite® adhesive from capscrew bolts and internal threads of the knuckle. Reapply Meritor specification 2297-C-7049 liquid adhesive or Loctite® 680 adhesive. At least half of the thread area must be covered.
(2) Insert the bolts through the steering arm. Hand-start the bolts into the knuckle assembly.
(3) Tighten the arm bolts to the following specification.

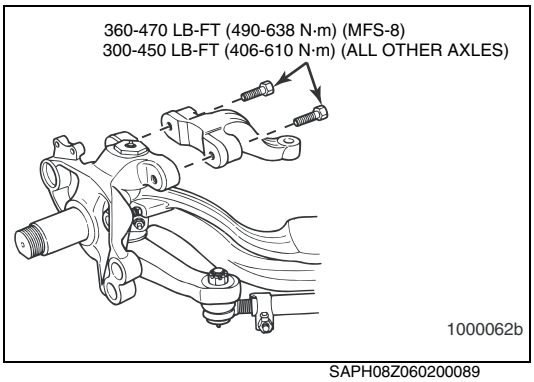

SAPH08Z060200089

- **MFS-8 axle:** 360-470 lb-ft (490-638 N·m)
- **All other axles:** 300-450 lb-ft (406-610 N·m)

**11. INSTALL THE TIE ROD ENDS INTO THE CROSS TUBE**

**NOTICE**

**The cross tube has right-hand threads on the right side of the vehicle and left-hand threads on the left side of the vehicle.**

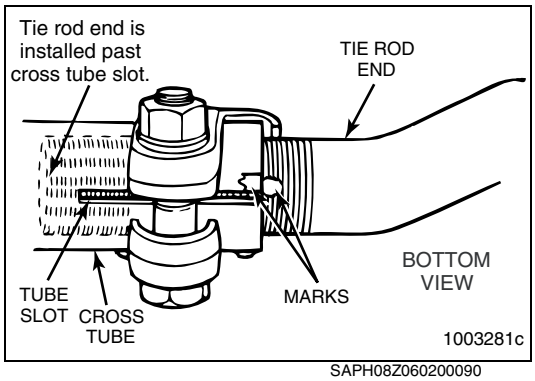


SAPH08Z060200090

The replacement cross tube must be the same length and diameter as the original tube. Use the thread count as a guide. Install the tie rod ends into the threaded cross tube ends to the approximate depth marked during the tie rod assembly removal.

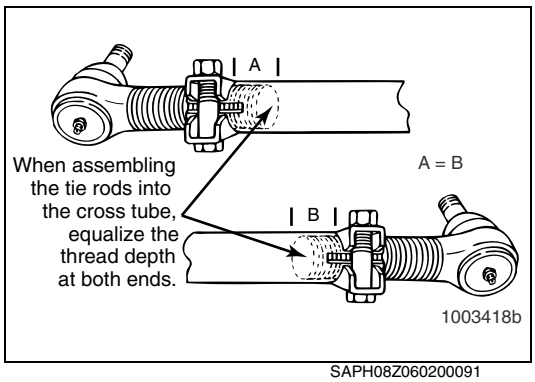


SAPH08Z060200091

If you are installing new tie rod ends, thread the tie rod ends to the approximate original depth inside the cross tube.

Both tie rod ends must be installed into the cross tube deeper than the end of the cross tube slot.

(1) Verify that the tab on the clamp is firmly seated against the end of the cross tube.

(2) Install the nuts and the bolts into the clamps. Tighten to the specified torque. Refer to "Front Non-Drive Axles with Conventional Wheel Ends", "Torque Specifications" on page AX02-8.

- **If the tab on the clamp is tack-welded:** Do not remove the tack weld. If you remove the tack weld, you will reduce the clamping force.

**12. TIE ROD ARMS, TIE ROD ENDS AND CROSS TUBE ASSEMBLY**

(1) Axles with Removable Tie Rod Arms

**NOTICE**

**If a different size tie rod arm is installed, the steering geometry is changed and may cause tire wear. Contact the ArvinMeritor Customer Service Center at 800-535-5560.**

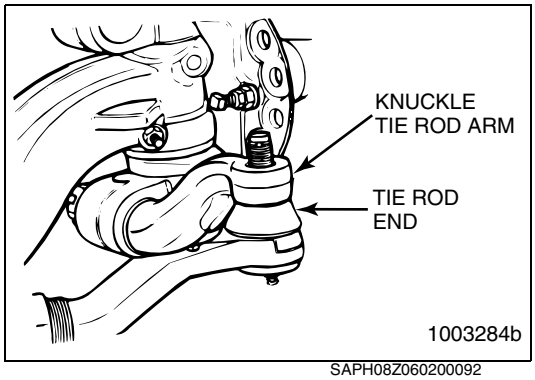


SAPH08Z060200092

a. Press the key into the slot in the arm. Install the tie rod arm into the knuckle.

b. Install the nut onto the tie rod arm. Tighten to the specified torque. Refer to "Front Non-Drive Axles with Conventional Wheel Ends", "Torque Specifications" on page AX02-8.

c. Install the cotter pins. If necessary, tighten the nut slightly, increasing the final torque value until the holes are aligned. Do not loosen the nut to install the cotter pin.

**NOTICE**

**The cross tube has right-hand threads on one end and left hand threads on the other end.**

d. If removed, install the tie rod ends into the cross tube to the position marked during removal. Thread the ends equally into the cross tube to the required length.

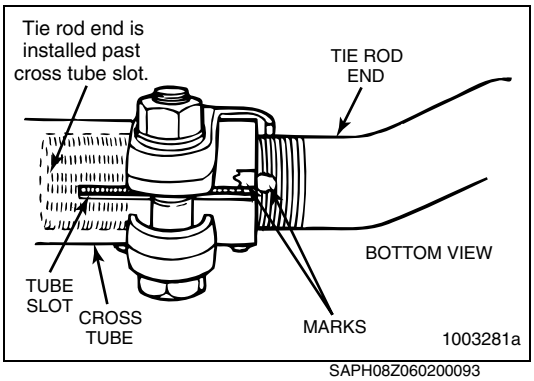

SAPH08Z060200093

e. Install the nuts and the bolts into the clamps. Tighten to the specified torque. Refer to "Front Non-Drive Axles with Conventional Wheel Ends", "Torque Specifications" on page AX02-8.

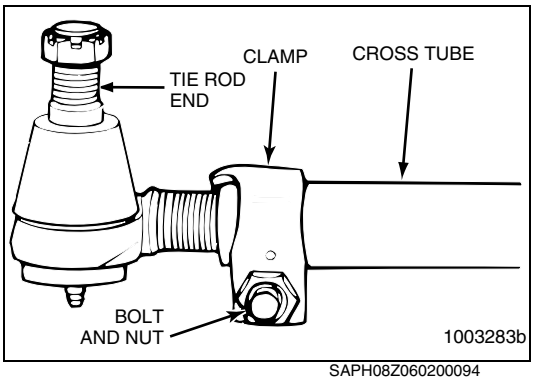

SAPH08Z060200094

f. Rotate the cross tube clamp to remove the nuts and bolts from the clamp. Tighten the nut to engage the locking element of the nut with the bolt. The clamp and tie rod end must be free to rotate. The clamp tab must be firmly seated against the cross tube.

g. Check the tie rod boot for cracks, tears or other damage. Also check the boot seals for damage. Replace the entire tie rod end if the boot is damaged or missing.

h. Clean and dry the tie rod taper and the tie rod arm taper hole.

i. Install the tie rod ends into the tie rod arms. The threaded portion of the tie rod end must be installed into the cross tube beyond the end of the slot. The clamp tab must be firmly seated against the cross tube.

j. Install the nuts onto the tie rod ends. Tighten to the specified torque. Refer to "Front Non-Drive Axles with Conventional Wheel Ends", "Torque Specifications" on page AX02-8.

k. Install the cotter pins. If necessary, tighten the nut until the holes are aligned. Do not loosen the nut to install the cotter pin.

l. Check and, if necessary, adjust the toe. Refer to "Measure and Adjust the Toe" on page AX02-57.

**13. CROSS TUBE AND TIE ROD ENDS**

(1) Axles with Integral Tie Rod Arms

**NOTICE**

**The cross tube has right-hand threads on one end and left hand threads on the other end.**

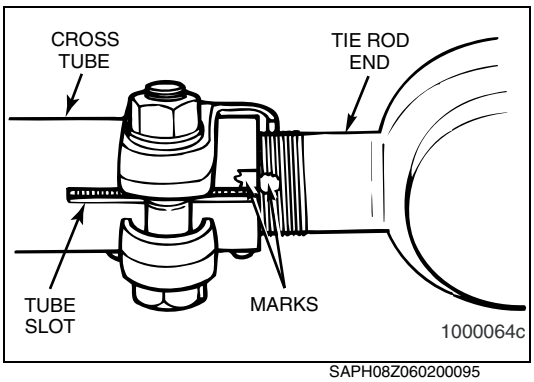

SAPH08Z060200095

a. If the tie rods have been removed, reinstall the tie rod ends into the cross tube to the position marked during removal. Thread the ends equally into the cross tube to the required length.

b. Install the nuts and the bolts into the clamps. Tighten to the specified torque. Refer to "Front Non-Drive Axles with Unitized Wheel Ends", "Torque Specifications" on page AX02-8.

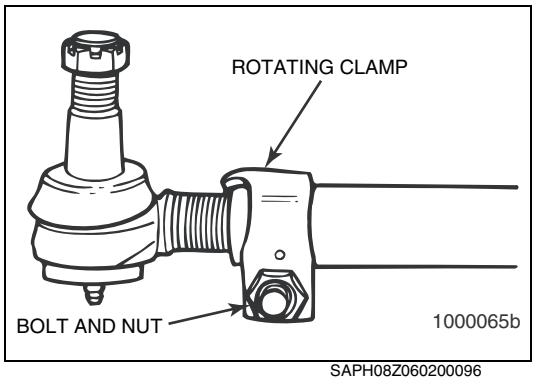

SAPH08Z060200096

c. Rotate the cross tube clamp to remove the nuts and bolts from the clamp. Tighten the nut to engage the locking element of the nut with the bolt. The clamp and tie rod end must be free to rotate. The clamp tab must be firmly positioned against the cross tube.

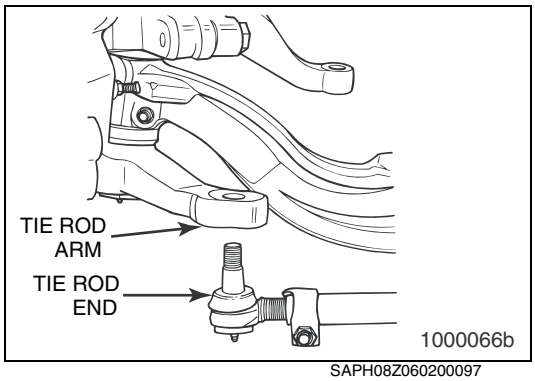

SAPH08Z060200097

d. Clean and dry the tie rod end taper and the tie rod arm taper hole.

e. Install the tie rod ends into the tie rod arm. The threaded portion of the tie rod end must be installed into the cross tube beyond the end of the cross tube slot.

f. Install the nuts onto the tie rod ends. Tighten to the specified torque. Refer to "Front Non-Drive Axles with Unitized Wheel Ends", "Torque Specifications" on page AX02-8.

g. Install the cotter pins. If necessary, tighten the nut until the holes are aligned. Do not loosen the nut to install the cotter pin.

h. Check and, if necessary, adjust the toe. Refer to "Measure and Adjust the Toe" on page AX02-57.

**14. DRAG LINK**

(1) Connect the drag link to the steering arm. Connect the drag link to the Pitman arm.

(2) Install the nuts. Tighten to the specified torque. Refer to "Front Non-Drive Axles with Conventional Wheel Ends", "Torque Specifications" on page AX02-8.

(3) Install the cotter pins. If necessary, tighten the nut until the holes are aligned. Do not loosen the nut to install the cotter pin.

(4) Lubricate the drag link. Refer to "Ball Studs on the Steering Arm, the Tie Rod Arm Ends and the Drag Link" on page AX02-61.

(5) Check for correct operation.

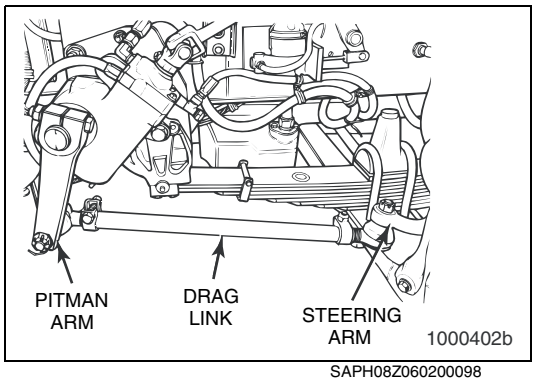

SAPH08Z060200098

**15. BRAKE COMPONENTS AND WHEEL ENDS**

(1) Axles with Conventional Wheel Ends

a. Install the brake assembly onto the knuckle. Lubricate the wheel bearings. Refer to "Grease-Lubricated Wheel Bearings" on page AX02-62 or "Oil-Lubricated Wheel Bearings" on page AX02-62.

b. Install the outer wheel bearing cone into the hub. Install the adjusting nut.

c. Adjust the wheel bearings. Refer to "Check and Adjust Wheel Bearings" on page AX02-51.

d. Install the cap and the gasket onto the hub. Install the capscrews and tighten to 20-30 lb-ft (27-41 N·m).

e. Install the wheel and tire assembly. Lower the vehicle to the ground. Check for correct operation.

f. Check and adjust the toe. Refer to "Measure and Adjust the Toe" on page AX02-57.

# ADJUSTMENT

EN08Z0602H600001

## HAZARD ALERT MESSAGES

Read and observe all Warning and Caution hazard alert messages in this publication. They provide information that can help prevent serious personal injury, damage to components, or both.

**⚠ WARNING**

**To prevent serious eye injury, always wear safe eye protection when you perform vehicle maintenance or service.**

### 1. INSPECTION BEFORE ALIGNMENT

(1) Parts

Refer to "Inspect Parts" on page AX02-18.

(2) Wheels and Tires

a. Verify that the tires are inflated to the specified pressure.
b. Verify that the front tires are the same size and type.
c. Verify that the lug nuts are tightened to the specified torque.
d. Verify that the wheels are balanced.
e. Check for bent or damaged wheels.

(3) Front Suspension

a. Verify that all fasteners are tightened to the specified torque.
b. Inspect the leaf springs for wear and damage.
c. Inspect the shock absorbers for wear and damage.

(4) Rear Axle and Rear Suspension

Front tire wear can be caused by the rear axle. If the outer edge of one front tire is worn and the inner edge of the other front tire is worn, check the following.

a. All fasteners are tightened to the specified torque.
b. The leaf springs are not worn or damaged.
c. The bushings in the leaf springs are not worn or damaged.
d. The torque rods, if used, are correctly adjusted.
e. The frame is not bent.

### 2. FRONT WHEEL ALIGNMENT

(1) Check the front wheel alignment:

a. Every 30,000 miles (50,000 km) or 12 months (normal maintenance).
b. When the vehicle does not steer correctly.
c. To correct a tire wear condition.

(2) Minor Front Wheel Alignment

Perform a minor front wheel alignment for all normal maintenance conditions using the following procedure.

a. Inspect all systems that affect the wheel alignment. Refer to "Inspection Before Alignment" in above 1.
b. Check and adjust the wheel bearings or wheel bearing end play for the unitized wheel end.
c. Check and adjust the toe.

(3) Major Front Wheel Alignment

Perform a major front wheel alignment to correct steering and tire wear conditions using the following procedure.

a. Inspect all systems that affect the wheel alignment. Refer to "Inspection Before Alignment" in above 1.
b. Check and adjust the wheel bearings.
c. Check and adjust the maximum turn angle.

- **If the vehicle has power steering:** Check and adjust the pressure relief in the power steering system. Refer to "Adjust the Pressure Relief in the Power Steering System, Set the Maximum Turn Angle" on page AX02-54.
  d. Check and adjust the turning radius angle. Refer to "Turning Radius Angle" on page AX02-55.
  e. Check the king pin, or steering axis, inclination. Refer to "King Pin Inclination" on page AX02-56.
  f. Check the camber angle. Refer to "Camber Angle" on page AX02-56.

**⚠ CAUTION**
**Replace damaged or out-of-specification axle components. Do not bend, repair or recondition axle components by welding or heat-treating. A bent axle beam reduces axle strength, affects vehicle operation and voids Meritor's warranty. Serious personal injury and damage to components can result.**

  g. Check and adjust the caster angle. Refer to "Caster Angle" on page AX02-57.
  h. Check and adjust the toe. Refer to "Measure and Adjust the Toe" on page AX02-57.

### 3. CHECK AND ADJUST WHEEL BEARINGS

**⚠ WARNING**
**Park the vehicle on a level surface. Block the wheels to prevent the vehicle from moving. Support the vehicle with safety stands. Do not work under a vehicle supported only by jacks. Jacks can slip and fall over. Serious personal injury and damage to components can result.**

(1) Park the vehicle on a level surface. Block the wheels to prevent the vehicle from moving. Set the parking brake.
(2) Raise the vehicle so that the wheels are off the floor. Support the vehicle with safety stands.
(3) Remove the capscrews and remove the gasket and the cap from the hub.
(4) Verify that the brake drum and the hub fasteners are tightened to the manufacturer's specifications.
(5) Attach a dial indicator with the magnetic base at the bottom of the hub or the brake drum. Adjust the dial indicator so that the pointer is against the center of the knuckle. Set the dial indicator on ZERO.

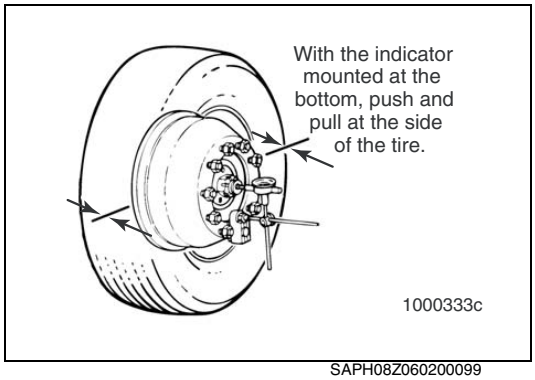

SAPH08Z060200099

**NOTICE**
**Do not push or pull at the top and bottom of the hub or drum, which can affect the end play measurement.**

(6) Measure the end play by pushing and pulling on each side of the hub or drum while looking at the dial indicator. The end play is the total travel observed.

- **If the end play is 0.001-0.005-inch (0.025-0.127 mm):** The bearings do not need adjustment.
- **If the end play is not 0.001-0.005-inch (0.025-0.127 mm):** Adjust the wheel bearings.

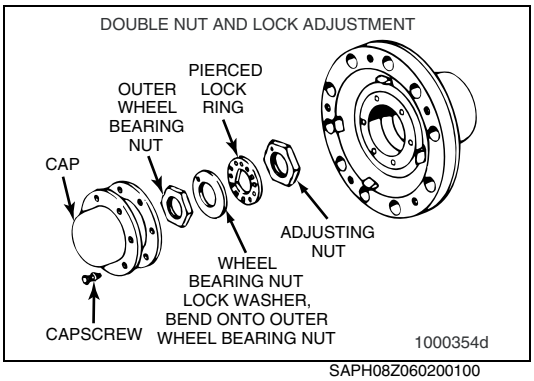


SAPH08Z060200100

(7) **On double nut and lock fasteners:** Bend the lock washer off the wheel bearing nut. Remove the wheel bearing nut, the lock washer and the pierced lock ring.

**⚠ WARNING**

**Use a torque wrench to tighten or loosen adjusting nuts. Do not use a hammer to directly hit adjusting nuts, or to hit a chisel or drift placed against them. Damaged adjusting nuts can prevent you from obtaining correct wheel bearing end play, which can affect vehicle operation and cause the wheels to separate from the vehicle. Serious personal injury and damage to components will result.**

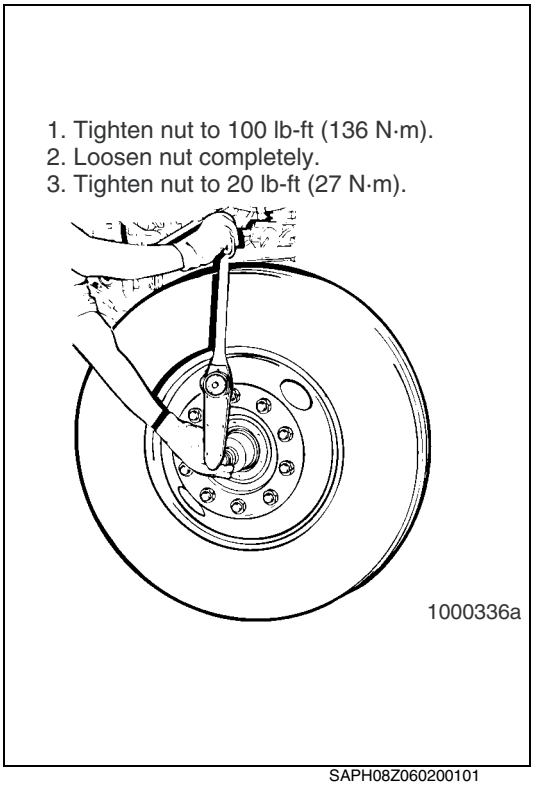


SAPH08Z060200101

(8) Use a torque wrench to tighten the adjusting nut to 100 lb-ft (136 N·m) while rotating the tire in both directions.

(9) Loosen the nut completely. Tighten the nut to 20 lb-ft (27 N·m) while rotating the tire.

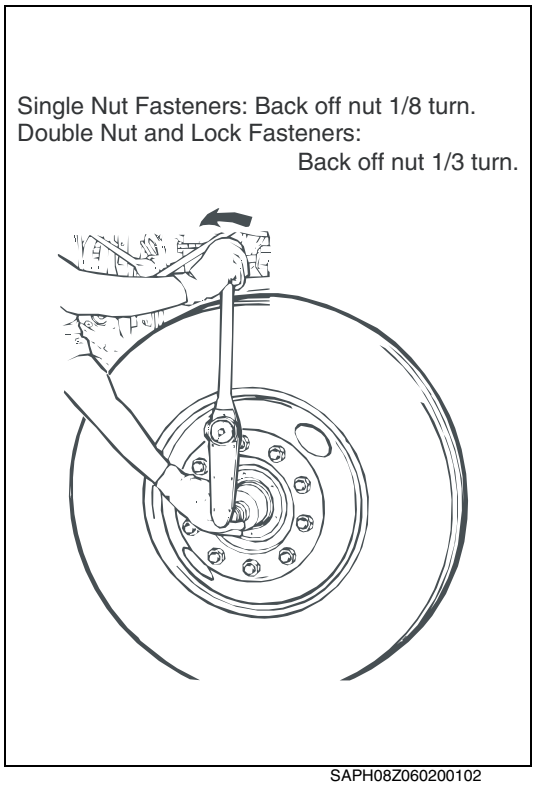

SAPH08Z060200102

(10) For axles with single nut fasteners, perform the following procedure.
   a. Back off the adjusting nut 1/8 turn.
   b. Rotate the nut in either direction to line up a slot with the closest cotter pin hole in the spindle.
   c. Install a new cotter pin into the nut.
   d. Measure the end play. The end play must be 0.001-0.005-inch (0.025-0.127 mm). Refer to Step (4) and Step (5). Readjust if necessary.

(11) For axles with double nut and lock fasteners, perform the following procedure.
   a. Back off the adjusting nut 1/3 turn.
   b. Install the pierced lock ring, the lock washer and the wheel bearing nut.
   c. For 1-1/8-inch (28.6 mm) wheel bearing nuts used on MFS-8 Series axle, tighten to 150-225 lb-ft (203-305 N·m).
   d. For wheel bearing nuts in sizes from 1-1/8-inches up to 2-5/8-inches (28.6-66.7 mm), tighten to 200-300 lb-ft (271-407 N·m).
   e. For wheel bearing nuts 2-5/8-inches (66.7 mm) and more, tighten to 250-400 lb-ft (339-542 N·m).
   f. Measure the end play. The end play must be 0.001-0.005-inch (0.025-0.127 mm). Refer to Step (4) and Step (5). Readjust if necessary.
   g. If the end play is to specification, bend the washer to at least one flat edge of the outer wheel bearing nut.

(12) Install the gasket and the cap onto the hub. Install the capscrews and tighten to 20-30 lb-ft (27-41 N·m).

(13) Lower the vehicle to the ground. Check for correct vehicle operation.

### 4. MAXIMUM TURN ANGLE ADJUSTMENT

**⚠ CAUTION**
**Do not exceed the maximum turn angle specified by the vehicle manufacturer. If the angle is exceeded, the steering arms, the cross tube and the tie rod ends will be damaged.**

The stop bolt on the back of the knuckle controls the maximum turn angle. If the stop bolt is missing, bent or broken, the system requires adjustment. Use the mechanical stop in the steering system to adjust the pressure relief.

Check the angle if the front tires rub against the frame or if the steering gear has been serviced. Use an alignment machine to check the angle.

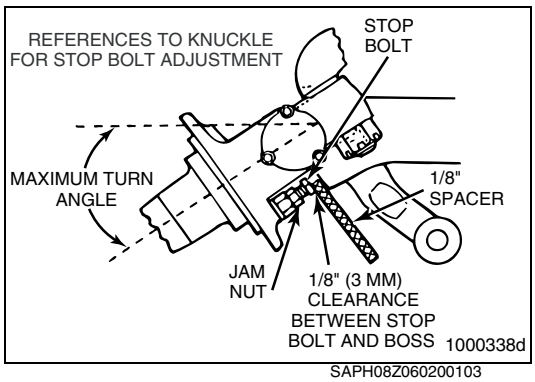

SAPH08Z060200103

- **For power steering systems:** The stop bolt should NOT touch the beam. The stop bolt should always have a minimum clearance of 1/8-inch (3.0 mm) when the knuckle is in the full-turn position as shown in figure.

**NOTICE**
**If the steering system is out-of-adjustment, inspect the steering arm for damage. Use a magnetic particle or liquid dye penetrant inspection procedure to inspect the steering arm. Pay particular attention to the bend, the taper and the area near the ball stud.**

(1) Two-Piece Steering 3/4-Inch Stop Bolt, Includes Unitized
   a. Place a 1/8-inch (3.0 mm) spacer between the stop bolt and the boss on the axle beam.

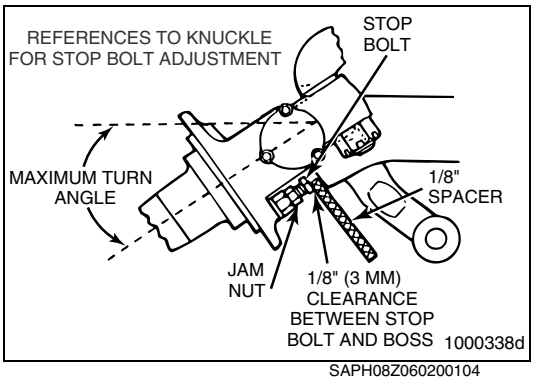

SAPH08Z060200104

b. Turn the steering wheel until the boss on the axle beam touches the spacer in front of the stop bolt. Measure the turn angle.

c. If the maximum turn angle does not meet vehicle manufacturer's specifications, correct the maximum angle.

- **In a power steering system:** Adjust the pressure relief.
- **In a manual steering system:** Follow the guidelines and specifications from the vehicle manufacturer.

d. When the maximum turn angle is correct:

a. Loosen the stop bolt jam nut.

b. Insert a 1/8-inch (3.0 mm) spacer and adjust the stop bolt.

c. Tighten the jam nut on conventional knuckles to 65-85 lb-ft (68-101 N·m).

(2) Four-Piece Steering 1/2-Inch Stop Bolt, Conventional Only

a. Place the washer onto the adapter.

b. Apply adhesive patch material into the 3/4-inch (19.0 mm) knuckle bore stop screw adapter hole.

c. Install the adapter with the washer into the threaded knuckle cavity.

d. Tighten the adapter to 85-115 lb-ft (115-155 N·m).

e. Start the jam nut onto the 1/2-inch (12.7 mm) bolt, and install the bolt and jam nut assembly into the adapter.

f. Place a 1/8-inch (3.0 mm) spacer between the stop bolt and the boss on the axle beam.

g. Turn the steering wheel until the boss on the axle beam touches the spacer in front of the stop bolt. Measure the turn angle.

h. If the maximum turn angle does not meet vehicle manufacturer's specifications, adjust the maximum turn angle.

- **In a power steering system:** Adjust the pressure relief.
- **In a manual steering system:** Follow guidelines and specifications from the vehicle manufacturer.

i. Proceed to the following instructions when the maximum turn angle is correct.

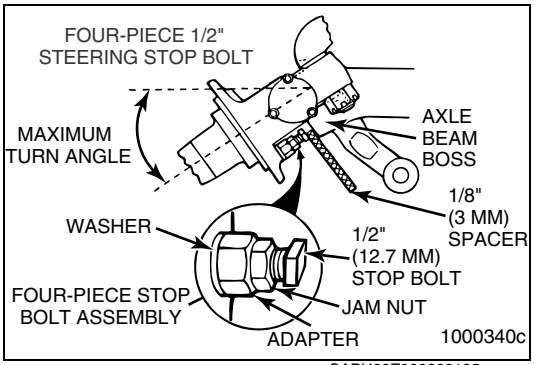

SAPH08Z060200105

a. Loosen the stop bolt jam nut.

b. Insert a 1/8-inch (3.0 mm) spacer between the stop bolt and the axle beam boss with the steering arm in the full-turn position.

c. Tighten the jam nut 50-75 lb-ft (68-101 N·m).

**5. ADJUST THE PRESSURE RELIEF IN THE POWER STEERING SYSTEM, SET THE MAXIMUM TURN ANGLE**

**⚠ CAUTION**

**In power steering systems, the hydraulic pressure should relieve or "drop off" at the end of the steering stroke, with 1/8-inch or 3 mm minimum clearance at the stop bolt. If the pressure does not relieve, the components of the front axle will be damaged.**

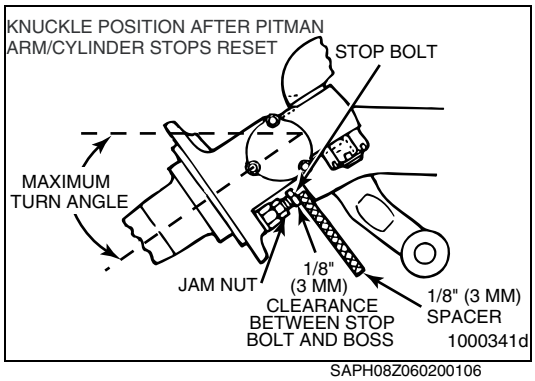


SAPH08Z060200106

The pressure relief in the power steering system stops or reduces forces applied to the axle when the wheel is moved in the full-turn position.

Check the pressure relief if the steering arm is damaged or the power steering gear is serviced.

Two types of systems are used to adjust the pressure relief.

- Mechanical stop on the Pitman arm or in the assist cylinder
- Hydraulic pressure relief in the power steering gear

**⚠ CAUTION**
**Meritor does not recommend a power steering system that does not have mechanical stops or pressure relief before the maximum turn angle is obtained. Damage to the axle can result.**

(1) Mechanical Stop
Use the mechanical stop in the steering system to adjust the pressure relief. Do not use the stop bolt on the knuckle alone to adjust the poppet valve pressure relief.

**⚠ CAUTION**
**Use a pressure gauge to verify that the pressure drops from the maximum system delivery pressure to gear box manufacturing recommendation BEFORE the full turning angle is achieved. If the pressure does not drop, damage to the front axle components will result.**

Steering systems with mechanical stops are adjusted when the wheels are turned to the full-right and full-left turn positions. The stop travel is set at 1/8-inch (3.0 mm) before the stop bolt contacts the axle beam boss.

(2) Hydraulic Pressure Relief in the Steering Gear

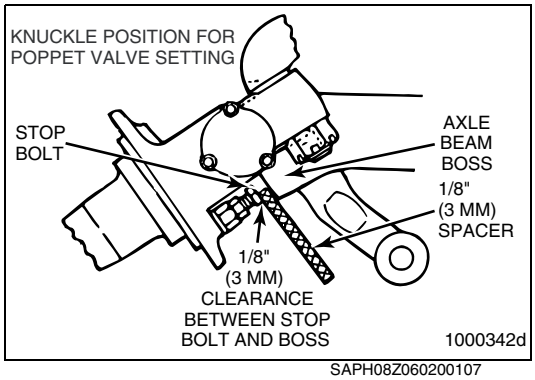


SAPH08Z060200107

**NOTICE**
**The stop bolt should always have a minimum clearance of 1/8-inch (3.0 mm) between the stop bolt and the axle beam boss.**

**Hydraulic steering gears with poppet valves are adjusted with a spacer between the stop bolt in the knuckle and the boss on the axle beam. The poppet valves are adjusted to stop or reduce steering forces from the 1/8-inch (3.0 mm) specified distance between the beam boss and the spacer.**

## 6. TURNING RADIUS ANGLE

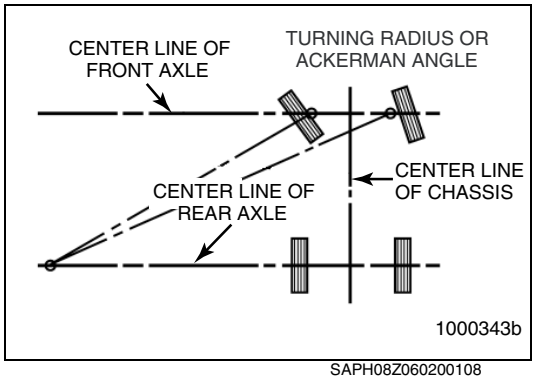


SAPH08Z060200108

When turning, the inner wheel must turn at a greater angle than the outer wheel. This angle is the turning radius angle, often called the Ackerman angle.

Check the turning radius angle with the radius plates on the alignment equipment. To determine correct turning radius angle specification, refer to "Data and Specifications" on page AX02-2.

- **If the angle is not within specifications:** Premature tire wear will occur. Inspect the knuckle, tie rod arms, tie rod ends and cross tube for wear or damage. Service as necessary.

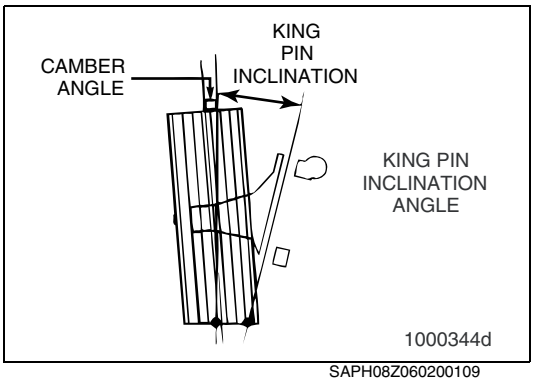

SAPH08Z060200109

### 7. KING PIN INCLINATION

**NOTICE**

**King pin, or steering axis inclination, is the angle measured between the center line of the king pin and the vertical position, as viewed from the front of the vehicle.**

The king pin inclination and the camber angle are designed into the axle to place the tire tread center line in contact with the road. This reduces steering effort and improves directional stability.

Use an alignment machine to check the king pin inclination angle. Refer to "Data and Specifications" on page AX02-2.

The king pin inclination is not adjustable. If the inclination is not at the specified angle, check the axle beam and knuckle for damage. Service as necessary.

### 8. CAMBER ANGLE

**⚠ WARNING**

**Replace damaged or out-of-specification axle components. Do not bend, repair or recondition axle components by welding or heat-treating. A bent axle beam reduces axle strength, affects vehicle operation and voids Meritor's warranty. Serious personal injury and damage to components can result.**

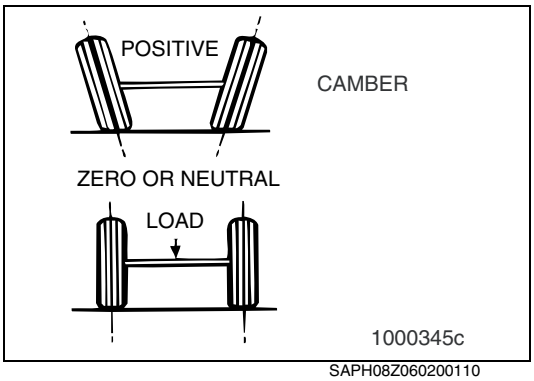

SAPH08Z060200110

Camber is the angle of the tire with respect to the ground. Camber is positive when the distance between the top of the wheels is greater than the distance at the ground.

A small amount of positive camber is built into the knuckle, because camber changes with load. This results in a zero camber angle when the vehicle is operated at normal load.

If camber is out of specification by more than 1-1/2 degrees, rapid or uneven tire wear will occur. Bias ply tires will show excess camber easily, while with vehicles equipped with radial tires, excess camber will not be as evident.

The camber angle is not adjustable. The camber angle is machined into both the axle beam and the knuckle. If the camber angle is not at the specified angle, check the axle beam and the steering knuckle for damage. Service as necessary.

Use an alignment machine to check the camber angle. Refer to "Data and Specifications" on page AX02-2. Following Table I gives the specification Meritor builds into the axle, but always use the specification from the vehicle manufacturer.

**Table I: Camber Angle Recommendations**

| Vehicle Condition | Axles with Biased Chamber | Axles with Unbiased Chamber |
|---|---|---|
| Truck or Tractor or Alignment Rack | Left Side: +11/16° to -3/16°<br>Right Side: +3/16° to -11/16° | +3/16° to -11/16° |
| Axle Not Installed in Vehicle | Left Side: +3/4° Nominal<br>Right Side: +1/4° Nominal | +1/4° Nominal |

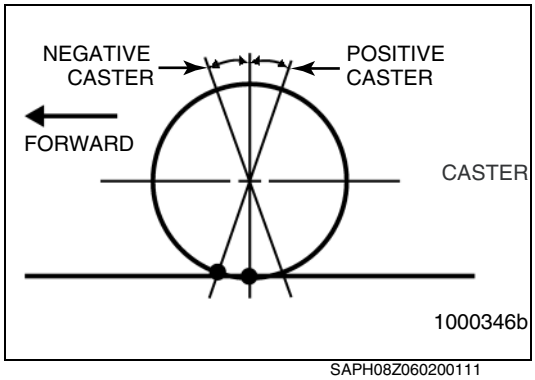

SAPH08Z060200111

**9. CASTER ANGLE**

Caster is the FORWARD or REARWARD tilt of the king pin center line when viewed from the side of the vehicle. The caster angle is the angle from the vertical position to the center line of the king pin. If the top of the king pin axis is toward the rear of the vehicle, the caster is positive. A slight positive caster creates a self-aligning action that helps to stabilize the vehicle after turning and stabilizes it for driving straight ahead.

Always use an alignment machine to check the caster angle.

If the caster is greater than specification, steering effort can increase a shimmy condition.

The caster angle is controlled by tapered shims installed under the leaf springs. Adjust the caster according to the specifications.

Caster specifications, refer to "Data and Specifications" on page AX02-2.

**10. MEASURE AND ADJUST THE TOE**

Toe is the relationship of the distance between the front of the front tires and the rear of the front tires.

When the front distance is less than the rear distance, the wheels are "toed in." Toe-in is designed into the vehicle to counteract the tendency of the tires to toe-out when the vehicle is driven.

Incorrect toe will result in rapid tire wear.

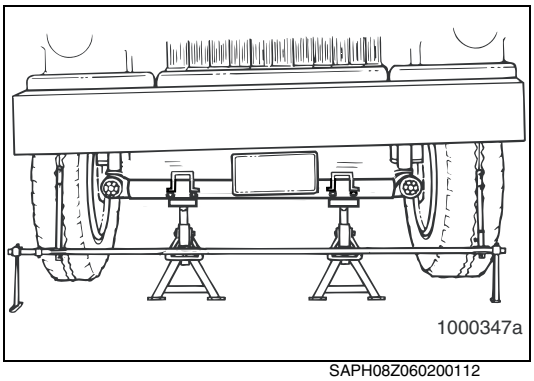

SAPH08Z060200112

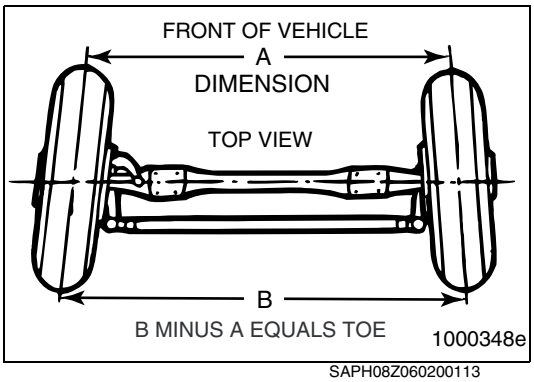

SAPH08Z060200113

**⚠ WARNING**

**Park the vehicle on a level surface. Block the wheels to prevent the vehicle from moving. Support the vehicle with safety stands. Do not work under a vehicle supported only by jacks. Jacks can slip and fall over. Serious personal injury and damage to components can result.**

(1) Park the vehicle on a level surface. Block the wheels to prevent the vehicle from moving. Set the parking brake.
(2) Use jacks to raise vehicle so that front tires are off the ground. Support the front axle with safety stands.
(3) Use paint or chalk to mark the center area of both front tires around the complete outer surface of the tire.
(4) Place the pointers of a trammel bar on the marks of each tire. Rotate the tires. Verify that a straight line is marked on the outer surface of the tire.
(5) Lower the vehicle to the floor. Do not measure toe with the front axle in the raised position. The weight of the vehicle must be on the front axle when toe is measured. Move the vehicle FORWARD and BACKWARD 10 feet (3 meters).
(6) Place the trammel bar at the back of the tires. Raise the pointers so that the pointers are level with the spindles. Align the pointers with the marks on the tires. Measure and record the distance between the pointers.
(7) Repeat Step (6) for the front of the tires.
(8) To obtain the toe measurement, subtract the distance reading between the front of the tires from the distance reading between the back of the tires.
(9) Use the following procedure if the toe measurement is not within the correct specifications shown in below Table.

**Toe Specifications**

| | |
|---|---|
| **Unloaded Vehicles** | **0.03-0.09 in. (0.8-2.4 mm)** |
| **Loaded Vehicles** | **0-0.06 in. (0-1.6 mm)** |

a. Loosen the tube clamp nut and bolt on each end of the cross tube.
b. Turn the cross tube until the specified toe distance is obtained.
c. The threaded portion of the tie rod end must be installed into the cross tube beyond the point where the tube slot stops.
d. Tighten the nut and bolt on each end of the cross tube to the specified torque. Refer to "Front Non-Drive Axles with Conventional Wheel Ends", "Torque Specifications" in page AX02-8.

(10) Repeat Step (1) through Step (8) to check the toe dimension.

# LUBRICATION AND MAINTENANCE

EN08Z0602A200001

## LUBRICATION

Read and observe all Caution and Warning safety alerts below and those that precede instructions or procedures you will perform.

**⚠ WARNING**

**Park the vehicle on a level surface. Block the wheels to prevent the vehicle from moving. Support the vehicle with safety stands. Do not work under a vehicle supported only by jacks. Jacks can slip and fall over. Serious personal injury and damage to components can result.**

Front Non-Drive Axle Greasing Intervals and Specifications

| Component | Greasing Interval | Grease | Meritor Specification | NLGI Grade | Grease Type | Outside Temperature |
|---|---|---|---|---|---|---|
| Ball Studs on Steering Arm, Tie Rod Ends, and Drag Link [1] | 6,000 miles (100,000 kilometers) or once a year, whichever comes first | Multi-Purpose Grease | O-617-A or O-617-B | 1 or 2 | Lithium 12 Hydroxystearate or Lithium Complex | Refer to the grease manufacturer's specifications for the temperature service limits. |
| King Pins and Bushings, Thrust Bearings | 18,000 miles (30,000 kilometers) or once a year, whichever comes first | | | | | |
| Unitized Wheel End | No Lube to Hub | Unit sealed for life of component | NONE | DO NOT LUBRICATE | | |

[1] Applies to ball studs on Easy SteerPlus axles. Sealedaxles require in spection of the boot on the ballstud every 6,000 miles (10,000 km) for wear and damage. Service as necessary.

Wheel-End Oil Change Intervals and Specifications

| On-Highway Operation Intervals | | Off-Highway Operation Intervals | | | | | Outside Temperature | | | |
|---|---|---|---|---|---|---|---|---|---|---|
| | | | | | | | °F | | °C | |
| Check Oil Level | Petroleum Oil Change | Check Oil Level | Petroleum Oil Change | Meritor Specification | Military Specification | Oil Description | Min. | Max. | Min. | Max. |
| 1,000 miles (1600 kilometers) | Whichever comes first: Seals replaced. Brakes relined 100,000 miles (160,000 kilometers) Once a year | 1,000 miles (1600 kilometers | Whichever comes first: Seals replaced. Brakes relined. Once a year | O-76-A, Gear Oil | MIL-L-2105-D | GL-5, SAE 85W/140 | 10 | None | 12 | None |
| | | | | O-76-D, Gear Oil | MIL-L-2105-D | GL-5, SAE 80W/90 | -15 | None | - 26 | None |
| | | | | O-76-E, Gear Oil | MIL-L-2105-D | GL-5, SAE 75W/90 | - 40 | None | - 40 | None |
| | | | | O-76-J, Gear Oil | MIL-L-2105-D | GL-5, SAE 75W | - 40 | 36 | - 40 | 2 |
| | | | | Heavy-Duty Engine Oil | MIL-L-210-B, -C, -D or -E | API -CD, -CE, -SF or -SG SAE 40 or 50[1] | 10 | None | 12 | None |
| | | | | Heavy-Duty Engine Oil | MIL-L -210-B, -C, -D or -E | API -CD, -CE, -SF or -SG SAE 30[2] | - 15 | None | - 26 | None |

[1] Current designations are acceptable. Multi-weight engine oils are acceotable if the SAE rating ends in a 40 or 50.

[2] Current designations are acceptable. Multi-weight engine oils are acceotable if the SAE rating ends in a 30.

SAPH08Z060200114

**1. TIE ROD END**

This procedure refers to all tie rod ends on Meritor non-drive steer axles.

(1) Park the vehicle on a level surface. Block the wheels to prevent the vehicle from moving. Set the parking brake.

(2) Turn the vehicle wheels to the STRAIGHT position.

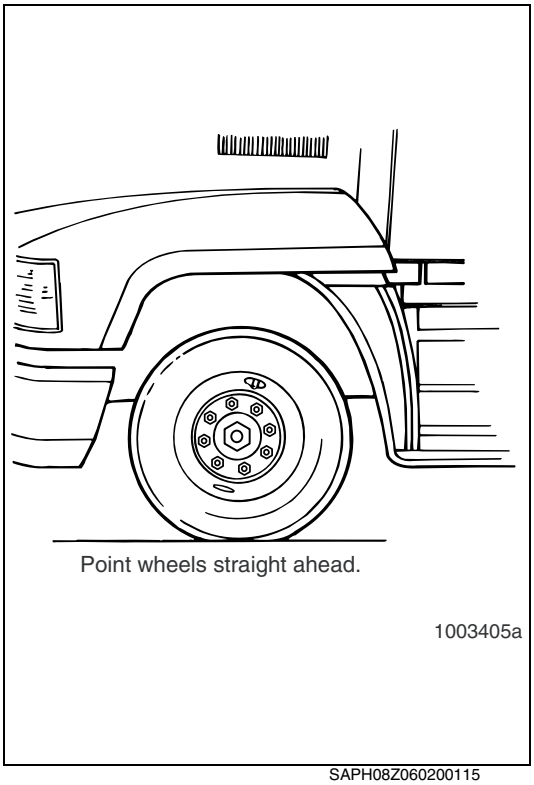


SAPH08Z060200115

(3) Wipe the grease fitting, seal and boot clean with shop towels.

(4) Attach either a hand or air pressure grease gun to the grease fitting. If using air pressure, do not exceed 150 psi (1035 kPa).

(5) Apply grease into the grease fitting. Discolored old grease should come out of the purge holes near the boot crimp or bellows area, typically three or more places.

(6) If the tie rod end is designed for lube service and it does not accept grease:

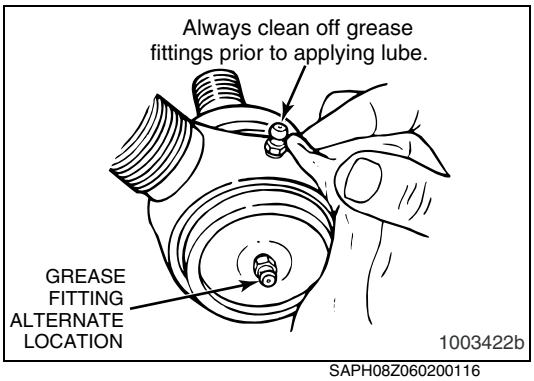


SAPH08Z060200116

a. Remove the grease fitting.

b. Inspect the threaded grease fitting hole in the tie rod end and remove any obstructions.

c. Install a new grease fitting.

d. Continue the lubrication procedure.

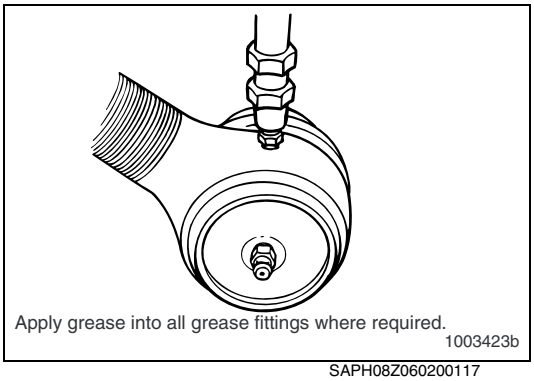


SAPH08Z060200117

(7) Apply grease until all old grease is purged from the boot.

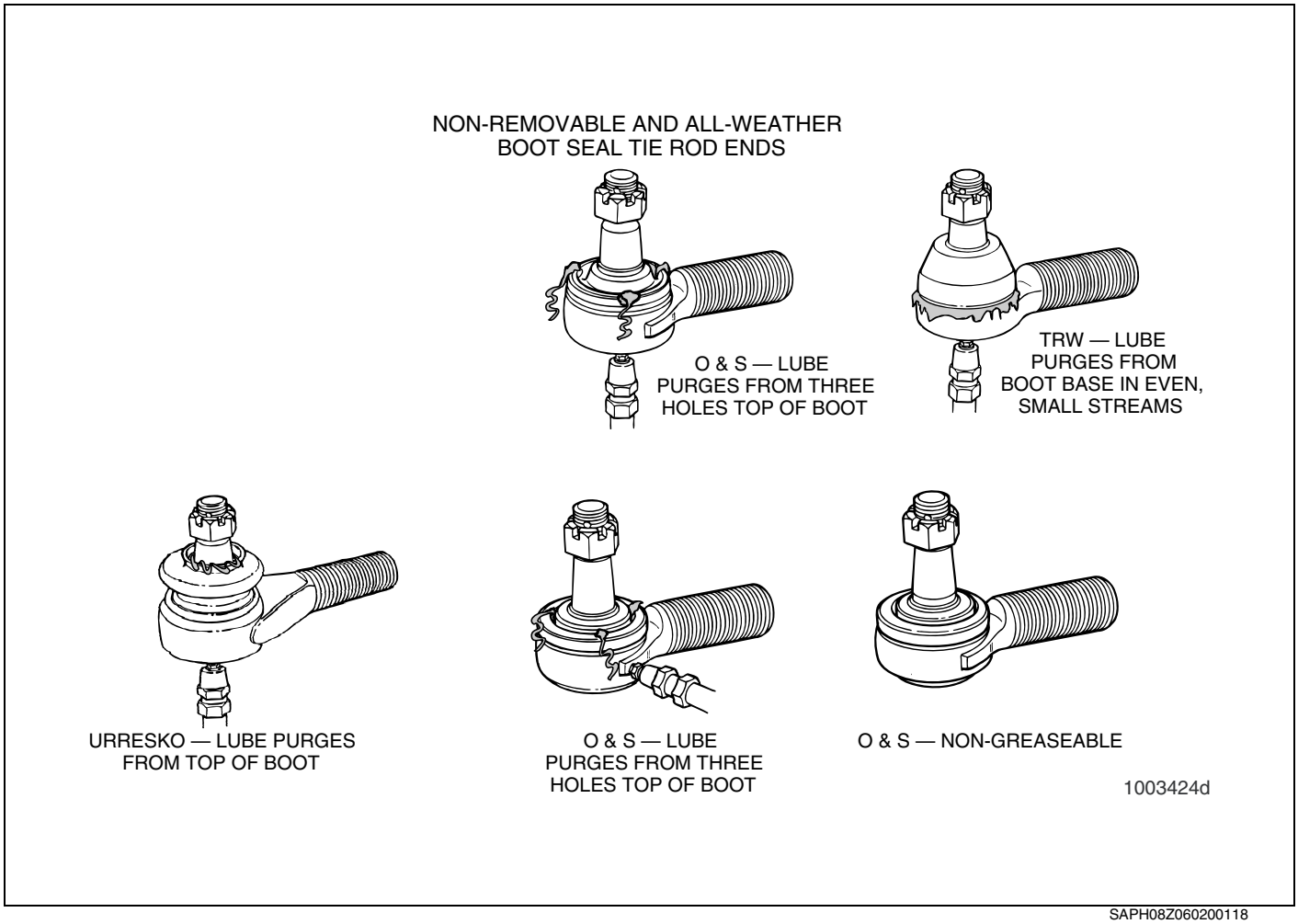


SAPH08Z060200118

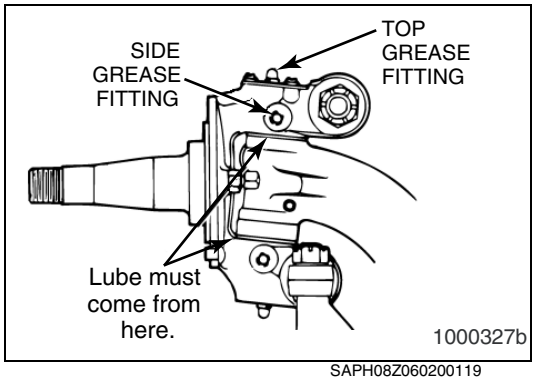


SAPH08Z060200119

**2. KING PINS**

(1) Axles with Conventional Wheel Ends

a. Park the vehicle on a level surface. Block the wheels to keep the vehicle from moving. Set the parking brake.

b. Verify that the tires touch the ground. DO NOT RAISE THE VEHICLE.

c. Clean off all grease fittings prior to lubrication.

d. Lubricate the king pins through the top and the bottom grease fittings.

e. Apply lubricant until new lubricant comes from between the upper shim pack and thrust bearing seal.

f. Apply lubricant into the bottom fitting until new lubricant purges and fills the thrust bearing.

**3. BALL STUDS ON THE STEERING ARM, THE TIE ROD ARM ENDS**

(1) Axles with Conventional and Unitized Wheel Ends

a. Park the vehicle on a level surface. Block the wheels to prevent the vehicle from moving. Set the parking brake.

b. Verify that the tires touch the ground. DO NOT RAISE THE VEHICLE.

c. Clean off all grease fittings prior to lubrication.

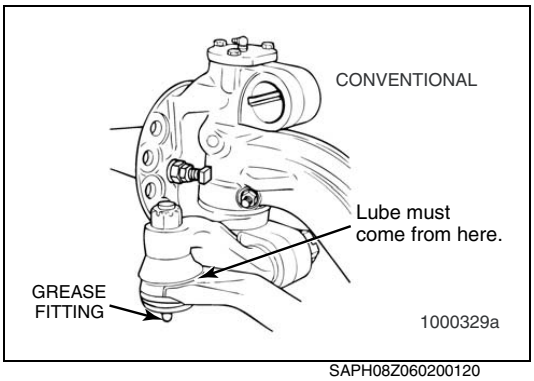


SAPH08Z060200120

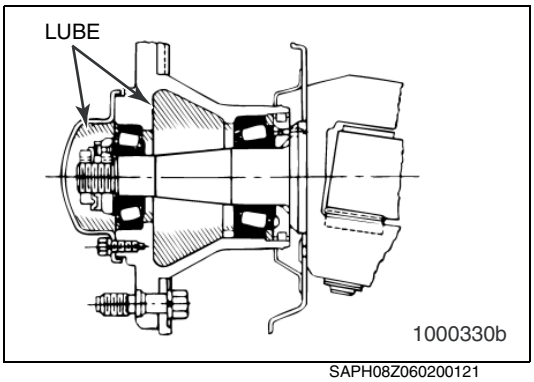


SAPH08Z060200121

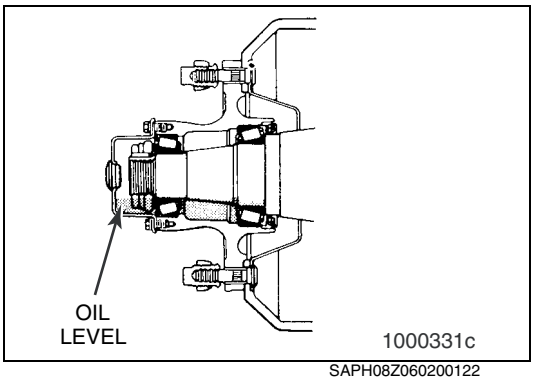


SAPH08Z060200122

d. Apply lubricant until new lubricant comes from the boot.

**4. GREASE-LUBRICATED WHEEL BEARINGS**

(1) Axles with Conventional Wheel Ends

**NOTICE**

**This procedure applies to hubs with grease-lubricated wheel bearings.**

a. Park the vehicle on a level surface. Block the wheels to keep the vehicle from moving. Set the parking brake.
b. Remove the tire and wheel assembly. Remove and disassemble the hub. Refer to "Wheel Ends" on page AX02-23.
c. Remove the old lubricant from all parts. Discard the seals. Inspect the wheel bearings for wear or damage. Replace worn or damaged bearings. Refer to "Wheel Bearings" on page AX02-35.
d. Force the specified lubricant from the large end of the cones into the cavities between the rollers and cage. Pack the hub between the bearing cups with lubricant to the level of the smallest diameter of the cups.
e. Install the inner and outer bearing cones into the cups in the hubs. The bearing cups must be pressed tight against the shoulder in the hubs.
f. Install new wheel seals into the hubs.
g. Install the hub and the wheel and tire assembly. Install the outer wheel bearing cone into the hub. Install the adjusting nut.
h. Adjust the wheel bearings. Refer to "Check and Adjust Wheel Bearings" on page AX02-51.

**5. OIL-LUBRICATED WHEEL BEARINGS**

(1) Axles with Conventional Wheel Ends

**NOTICE**

**This procedure applies to hubs with oil-lubricated wheel bearings.**

a. Check the level on the cap. If the oil level is not at the specified level on the cap, remove the fill plug.
b. Add the specified oil until the oil is at the specified level.

# MAINTENANCE

EN08Z0602G100001

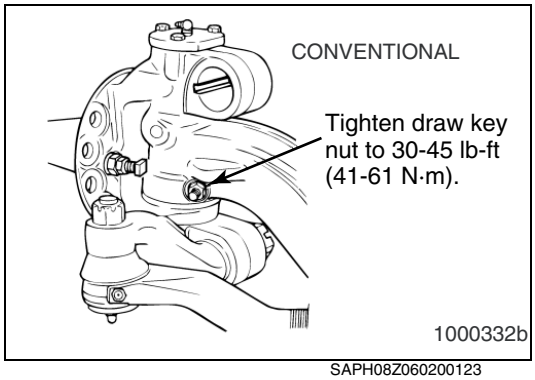


SAPH08Z060200123

**1. TIGHTEN DRAW KEY NUTS**

(1) Axles with Conventional and Unitized Wheel Ends

**NOTICE**

**This procedure applies to all except 901, 903 and 970 Series axles. These axles do not use a draw key. Refer to the identification tag on the front of the axle beam.**

Tighten the nuts on the side of the knuckle that hold the draw keys to 30-45 lb-ft (41-61 N·m) at the following times.

- After the first 6,000 miles (10,000 km) of new vehicle operation
- Every 36,000 miles (60,000 km) of operation

**2. CHECK THE STEERING ARM BOLTS**

**⚠ WARNING**

**Take care when you use Loctite® adhesive to avoid serious personal injury. Read the manufacturer's instructions before using this product. Follow the instructions carefully to prevent irritation to the eyes and skin. If Loctite® adhesive material gets into your eyes, follow the manufacturer's emergency procedures. Have your eyes checked by a physician as soon as possible.**

(1) Check the steering arm bolts for minimum torque. Refer to below Table.

**Steering Arm Bolts Torque Specifications**

| Axle | Torque lb-ft (N·m) |
|---|---|
| MFS-8 | 360-470 (490-638) |
| All other axles | 300-450 (406-610) |

- If steering arm bolt torque has fallen below minimum torque:
  a. Remove the bolts. Clean all the threads. Install new Loctite® 680 adhesive, Meritor part number 2297-K-5523.
  b. Tighten the bolts to specification.

(2) Check the steering arm bolt torque every 30,000 miles (50,000 km) or 12 months.

(3) Refer to "Check the Torque Values of Dri-Loc® Fasteners Not Requiring Removal" on page AX02-33 for Dri-Loc® fastener installation procedures.

# REAR AXLE

AX03-001

**REAR AXLE ..... AX03-2**
DATA AND SPECIFICATIONS ..... AX03-2
TROUBLESHOOTING ..... AX03-8
COMPONENT LOCATOR ..... AX03-9
SPECIAL TOOL ..... AX03-12
DISASSEMBLY ..... AX03-14
PREPARE PARTS FOR ASSEMBLY ..... AX03-16
ASSEMBLY ..... AX03-20
ADJUSTMENT ..... AX03-30
LUBRICATION AND MAINTENANCE ..... AX03-32

# REAR AXLE

## DATA AND SPECIFICATIONS

EN08Z0803I200001

| | |
|---|---|
| **Type** | **Full-floating tube axle** |

| MODEL | | AXLE MODEL |
|---|---|---|
| HINO 238, 258, 268 | (NE8J, NJ8J) | RS17-145 |
| HINO 238, 258, 268 | (NE8J, NJ8J) | RS19-145 |
| HINO 338 | (NF8J, NV8J) | RS21-145 |
| HINO 338, 358 | (NH8J, NV8J) | RS23-160 |

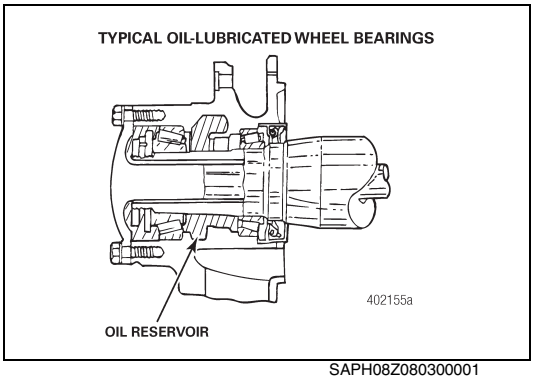


SAPH08Z080300001

**NOTICE**
**All models use oil-lubricated wheel bearings.**

## SPEED LIMIT DATA LIST

- Speed limit must not exceed the following table.
- Be sure to carry out the adjustment of engine's speed limit data by HINO DX II when you change the tire size or rear axle gear ratio.

**⚠ WARNING**
**The maximum speed limit of the speed limiter depends upon the tire size and rear axle gear ratio.**
**NEVER set the "speed limit" in excess of the speed set forth on the table below for the corresponding tire size and rear axle gear ratio.**
**ALWAYS adjust the engine's speed limit data by using the HINO DX II whenever the tire size or the rear axle gear ratio is changed.**

**Apply to allison auto transmission series**

| MODEL | AUTO TRANSMISSION MODEL | REAR AXLE SERIES | REAR AXLE GEAR RATIO | TIRE SIZE | TIRE RADIUS (m) | SPEED LIMIT (km/h) | REFERENCE; SPEED LIMIT (mile/h) |
|---|---|---|---|---|---|---|---|
| NE | 2200HS<br>2200RDS<br>2500HS<br>2500RDS | RS17<br>RS19 | 4.11 | 245/70R19.5 | 0.407 | 135 | 84 |
| | | | 4.88 | 245/70R19.5 | 0.407 | 114 | 70 |
| | | | 5.13 | 10R22.5 | 0.492 | 131 | 81 |
| | | | | 11R22.5 | 0.508 | 135 | 84 |
| | | | | 245/70R19.5 | 0.407 | 108 | 67 |
| | | | | 255/70R22.5 | 0.453 | 120 | 74 |
| | | | | 295/75R22.5 | 0.493 | 131 | 81 |
| NF | 2500RDS<br>2500HS | RS21 | 5.29 | 11R22.5 | 0.508 | 131 | 81 |
| | | | | 295/75R22.5 | 0.493 | 127 | 79 |
| | | | 5.57 | 11R22.5 | 0.508 | 124 | 77 |
| | | | | 295/75R22.5 | 0.493 | 121 | 75 |
| NJ | 2200HS<br>2200RDS<br>2500RDS<br>2500HS | RS17<br>RS19 | 5.13 | 11R22.5 | 0.508 | 135 | 84 |
| | | | | 245/70R19.5 | 0.407 | 108 | 67 |
| | | | | 255/70R22.5 | 0.453 | 121 | 75 |
| | | | | 295/75R22.5 | 0.493 | 131 | 81 |
| | | | 5.29 | 11R22.5 | 0.508 | 131 | 81 |
| | | | | 255/70R22.5 | 0.453 | 117 | 72 |
| | | | | 295/75R22.5 | 0.493 | 127 | 79 |
| | | | 5.57 | 11R22.5 | 0.508 | 124 | 77 |
| | | | | 255/70R22.5 | 0.453 | 111 | 69 |
| | | | | 295/75R22.5 | 0.493 | 121 | 75 |
| NV | 2500RDS<br>2500HS | RS21<br>RS23 | 4.88 | 11R22.5 | 0.508 | 142 | 88 |
| | | | | 295/75R22.5 | 0.493 | 138 | 86 |
| | | | 5.29 | 11R22.5 | 0.508 | 131 | 81 |
| | | | | 295/75R22.5 | 0.493 | 127 | 79 |
| | | | 5.38 | 11R22.5 | 0.508 | 129 | 80 |
| | | | 5.57 | 11R22.5 | 0.508 | 124 | 77 |
| | | | | 295/75R22.5 | 0.493 | 121 | 75 |
| | | | 5.63 | 11R22.5 | 0.508 | 123 | 76 |
| | | | 5.86 | 11R22.5 | 0.508 | 118 | 73 |
| | | | | 295/75R22.5 | 0.493 | 115 | 71 |
| | | | 6.14 | 11R22.5 | 0.508 | 113 | 70 |
| | | | | 295/75R22.5 | 0.493 | 110 | 68 |

| MODEL | AUTO TRANSMISSION MODEL | REAR AXLE SERIES | REAR AXLE GEAR RATIO | TIRE SIZE | TIRE RADIUS (m) | SPEED LIMIT (km/h) | REFERENCE; SPEED LIMIT (mile/h) |
|---|---|---|---|---|---|---|---|
| NV | 3000RDS 3500RDS | RS21 RS23 | 4.88 | 11R22.5 | 0.508 | 136 | 84 |
| | | | | 295/75R22.5 | 0.493 | 132 | 82 |
| | | | 5.29 | 11R22.5 | 0.508 | 126 | 78 |
| | | | | 295/75R22.5 | 0.493 | 122 | 76 |
| | | | 5.38 | 11R22.5 | 0.508 | 124 | 77 |
| | | | 5.57 | 11R22.5 | 0.508 | 120 | 74 |
| | | | | 295/75R22.5 | 0.493 | 116 | 72 |
| | | | 5.63 | 11R22.5 | 0.508 | 118 | 73 |
| | | | 5.86 | 11R22.5 | 0.508 | 114 | 70 |
| | | | | 295/75R22.5 | 0.493 | 110 | 68 |
| | | | 6.14 | 11R22.5 | 0.508 | 108 | 67 |
| | | | | 295/75R22.5 | 0.493 | 105 | 65 |
| NH | 3000RDS 3500RDS | RS23 | 5.38 | 11R22.5 | 0.508 | 124 | 77 |
| | | | | 295/75R22.5 | 0.493 | 120 | 74 |
| | | | 5.63 | 11R22.5 | 0.508 | 114 | 70 |
| | | | | 295/75R22.5 | 0.493 | 118 | 73 |
| | | | 6.14 | 11R22.5 | 0.508 | 108 | 67 |
| | | | | 295/75R22.5 | 0.493 | 105 | 65 |

## IDENTIFICATION

AXLE IDENTIFICATION TAG INFORMATION

Model No. . . . . .
Customer No. . . . . .

Serial No. . . . . Plant . . . . . .
Ratio . . . . . .

IDENTIFICATION TAG

LOCATION OF THE IDENTIFICATION TAG, OR STAMP NUMBER, FOR THE AXLES. LOCATION IS DETERMINED FROM THE LEFT DRIVER SIDE LOOKING TOWARD THE FRONT OF THE VEHICLE.

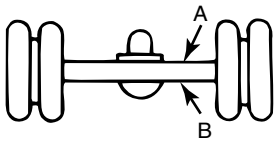


A — FRONT ENGINE DRIVE — RIGHT REAR, NEXT TO COVER
B — REAR ENGINE DRIVE — LEFT OR RIGHT REAR, NEXT TO DRIVE UNIT

1002704c

SAPH08Z080300002

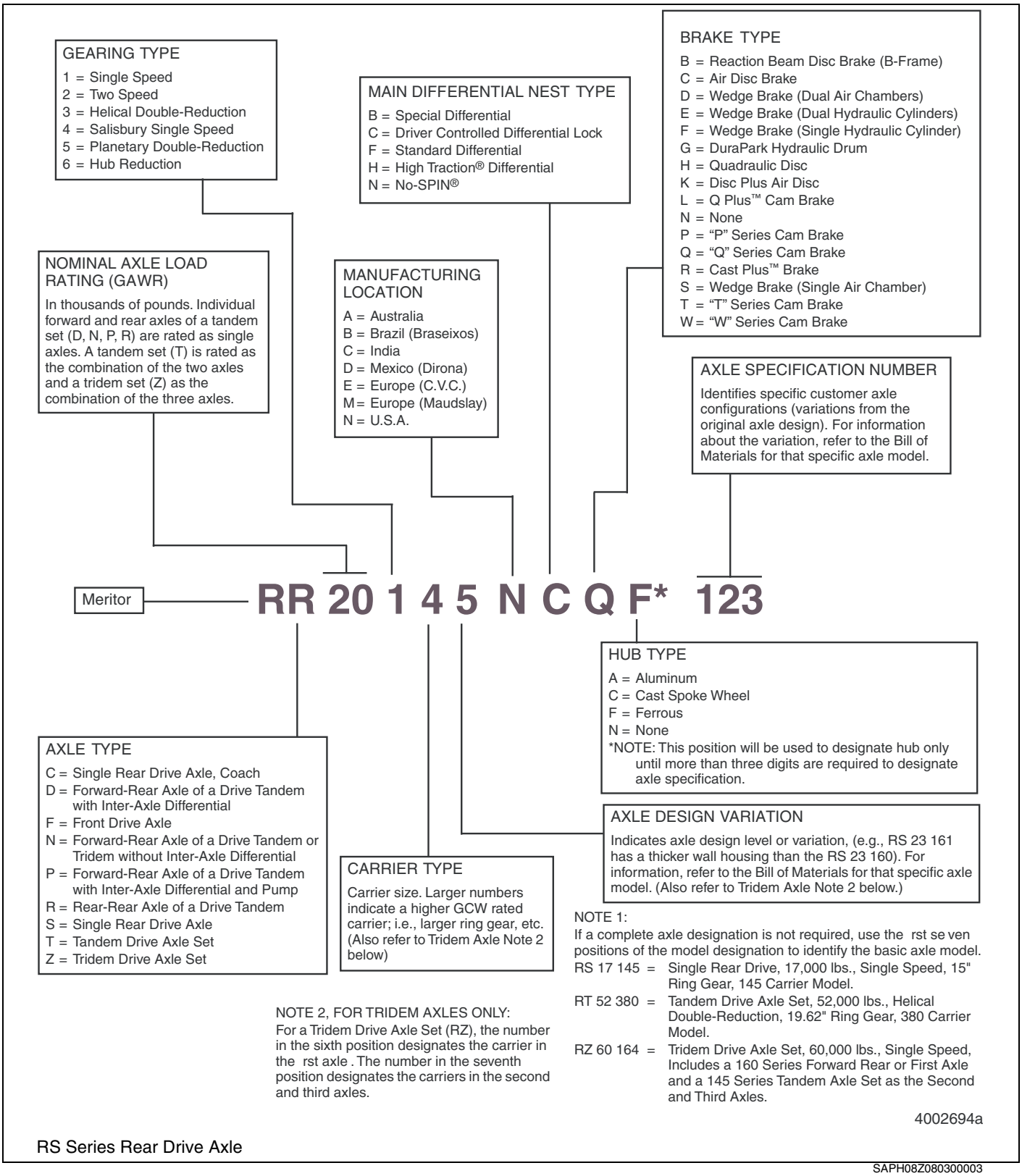


RS Series Rear Drive Axle

SAPH08Z080300003

## ASBESTOS FIBERS WARNING

***The following procedures for servicing brakes are recommended to reduce exposure to asbestos fiber dust, a cancer and lung disease hazard. Material Safety Data Sheets are available from ArvinMeritor.***

### Hazard Summary

Because some brake linings contain asbestos, workers who service brakes must understand the potential hazards of asbestos and precautions for reducing risks. Exposure to airborne asbestos dust can cause serious and possibly fatal diseases, including asbestosis (a chronic lung disease) and cancer, principally lung cancer and mesothelioma (a cancer of the lining of the chest or abdominal cavities). Some studies show that the risk of lung cancer among persons who smoke and who are exposed to asbestos is much greater than the risk for non-smokers. Symptoms of these diseases may not become apparent for 15, 20 or more years after the first exposure to asbestos.

Accordingly, workers must use caution to avoid creating and breathing dust when servicing brakes. Specific recommended work practices for reducing exposure to asbestos dust follow. Consult your employer for more details.

### Recommended Work Practices

1. Separate Work Areas. Whenever feasible, service brakes in a separate area away from other operations to reduce risks to unprotected persons. OSHA has set a maximum allowable level of exposure for asbestos of 0.1 f/cc as an 8-hour time-weighted average and 1.0 f/cc averaged over a 30-minute period. Scientists disagree, however, to what extent adherence to the maximum allowable exposure levels will eliminate the risk of disease that can result from inhaling asbestos dust. OSHA requires that the following sign be posted at the entrance to areas where exposures exceed either of the maximum allowable levels:

**DANGER: ASBESTOS**
**CANCER AND LUNG DISEASE HAZARD**
**AUTHORIZED PERSONNEL ONLY**
**RESPIRATORS AND PROTECTIVE CLOTHING**
**ARE REQUIRED IN THIS AREA.**

2. Respiratory Protection. Wear a respirator equipped with a high-efficiency (HEPA) filter approved by NIOSH or MSHA for use with asbestos at all times when servicing brakes, beginning with the removal of the wheels.

3. Procedures for Servicing Brakes.

a. Enclose the brake assembly within a negative pressure enclosure. The enclosure should be equipped with a HEPA vacuum and worker arm sleeves. With the enclosure in place, use the HEPA vacuum to loosen and vacuum residue from the brake parts.

b. As an alternative procedure, use a catch basin with water and a biodegradable, non-phosphate, water-based detergent to wash the brake drum or rotor and other brake parts. The solution should be applied with low pressure to prevent dust from becoming airborne. Allow the solution to flow between the brake drum and the brake support or the brake rotor and caliper. The wheel hub and brake assembly components should be thoroughly wetted to suppress dust before the brake shoes or brake pads are removed. Wipe the brake parts clean with a cloth.

c. If an enclosed vacuum system or brake washing equipment is not available, employers may adopt their own written procedures for servicing brakes, provided that the exposure levels associated with the employer's procedures do not exceed the levels associated with the enclosed vacuum system or brake washing equipment. Consult OSHA regulations for more details.

d. Wear a respirator equipped with a HEPA filter approved by NIOSH or MSHA for use with asbestos when grinding or machining brake linings. In addition, do such work in an area with a local exhaust ventilation system equipped with a HEPA filter.

e. **NEVER** use compressed air by itself, dry brushing, or a vacuum not equipped with a HEPA filter when cleaning brake parts or assemblies. **NEVER** use carcinogenic solvents, flammable solvents, or solvents that can damage brake components as wetting agents.

4. Cleaning Work Areas. Clean work areas with a vacuum equipped with a HEPA filter or by wet wiping. **NEVER** use compressed air or dry sweeping to clean work areas. When you empty vacuum cleaners and handle used rags, wear a respirator equipped with a HEPA filter approved by NIOSH or MSHA for use with asbestos. When you replace a HEPA filter, wet the filter with a fine mist of water and dispose of the used filter with care.

5. Worker Clean-Up**.** After servicing brakes, wash your hands before you eat, drink or smoke. Shower after work. Do not wear work clothes home. Use a vacuum equipped with a HEPA filter to vacuum work clothes after they are worn. Launder them separately. Do not shake or use compressed air to remove dust from work clothes.

6. Waste Disposal. Dispose of discarded linings, used rags, cloths and HEPA filters with care, such as in sealed plastic bags. Consult applicable EPA, state and local regulations on waste disposal.

### Regulatory Guidance

References to OSHA, NIOSH, MSHA, and EPA, which are regulatory agencies in the United States, are made to provide further guidance to employers and workers employed within the United States. Employers and workers employed outside of the United States should consult the regulations that apply to them for further guidance.

## NON-ASBESTOS FIBERS WARNING

***The following procedures for servicing brakes are recommended to reduce exposure to non-asbestos fiber dust, a cancer and lung disease hazard. Material Safety Data Sheets are available from ArvinMeritor.***

### Hazard Summary

Most recently manufactured brake linings do not contain asbestos fibers. These brake linings may contain one or more of a variety of ingredients, including glass fibers, mineral wool, aramid fibers, ceramic fibers and silica that can present health risks if inhaled. Scientists disagree on the extent of the risks from exposure to these substances. Nonetheless, exposure to silica dust can cause silicosis, a non-cancerous lung disease. Silicosis gradually reduces lung capacity and efficiency and can result in serious breathing difficulty. Some scientists believe other types of non-asbestos fibers, when inhaled, can cause similar diseases of the lung. In addition, silica dust and ceramic fiber dust are known to the State of California to cause lung cancer. U.S. and international agencies have also determined that dust from mineral wool, ceramic fibers and silica are potential causes of cancer.

Accordingly, workers must use caution to avoid creating and breathing dust when servicing brakes. Specific recommended work practices for reducing exposure to non-asbestos dust follow. Consult your employer for more details.

### Recommended Work Practices

1. Separate Work Areas. Whenever feasible, service brakes in a separate area away from other operations to reduce risks to unprotected persons.

2. Respiratory Protection. OSHA has set a maximum allowable level of exposure for silica of 0.1 $mg/m^3$ as an 8-hour time-weighted average. Some manufacturers of non-asbestos brake linings recommend that exposures to other ingredients found in non-asbestos brake linings be kept below 1.0 f/cc as an 8-hour time-weighted average. Scientists disagree, however, to what extent adherence to these maximum allowable exposure levels will eliminate the risk of disease that can result from inhaling non-asbestos dust.

Therefore, wear respiratory protection at all times during brake servicing, beginning with the removal of the wheels. Wear a respirator equipped with a high-efficiency (HEPA) filter approved by NIOSH or MSHA, if the exposure levels may exceed OSHA or manufacturer's recommended maximum levels. Even when exposures are expected to be within the maximum allowable levels, wearing such a respirator at all times during brake servicing will help minimize exposure.

3. Procedures for Servicing Brakes.

a. Enclose the brake assembly within a negative pressure enclosure. The enclosure should be equipped with a HEPA vacuum and worker arm sleeves. With the enclosure in place, use the HEPA vacuum to loosen and vacuum residue from the brake parts.

b. As an alternative procedure, use a catch basin with water and a biodegradable, non-phosphate, water-based detergent to wash the brake drum or rotor and other brake parts. The solution should be applied with low pressure to prevent dust from becoming airborne. Allow the solution to flow between the brake drum and the brake support or the brake rotor and caliper. The wheel hub and brake assembly components should be thoroughly wetted to suppress dust before the brake shoes or brake pads are removed. Wipe the brake parts clean with a cloth.

c. If an enclosed vacuum system or brake washing equipment is not available, carefully clean the brake parts in the open air. Wet the parts with a solution applied with a pump-spray bottle that creates a fine mist. Use a solution containing water, and, if available, a biodegradable, non-phosphate, water-based detergent. The wheel hub and brake assembly components should be thoroughly wetted to suppress dust before the brake shoes or brake pads are removed. Wipe the brake parts clean with a cloth.

d. Wear a respirator equipped with a HEPA filter approved by NIOSH or MSHA when grinding or machining brake linings. In addition, do such work in an area with a local exhaust ventilation system equipped with a HEPA filter.

e. **NEVER** use compressed air by itself, dry brushing, or a vacuum not equipped with a HEPA filter when cleaning brake parts or assemblies. **NEVER** use carcinogenic solvents, flammable solvents, or solvents that can damage brake components as wetting agents.

4. Cleaning Work Areas. Clean work areas with a vacuum equipped with a HEPA filter or by wet wiping. **NEVER** use compressed air or dry sweeping to clean work areas. When you empty vacuum cleaners and handle used rags, wear a respirator equipped with a HEPA filter approved by NIOSH or MSHA, to minimize exposure. When you replace a HEPA filter, wet the filter with a fine mist of water and dispose of the used filter with care.

5. Worker Clean-Up. After servicing brakes, wash your hands before you eat, drink or smoke. Shower after work. Do not wear work clothes home. Use a vacuum equipped with a HEPA filter to vacuum work clothes after they are worn. Launder them separately. Do not shake or use compressed air to remove dust from work clothes.

6. Waste Disposal**.** Dispose of discarded linings, used rags, cloths and HEPA filters with care, such as in sealed plastic bags. Consult applicable EPA, state and local regulations on waste disposal.

### Regulatory Guidance

References to OSHA, NIOSH, MSHA, and EPA, which are regulatory agencies in the United States, are made to provide further guidance to employers and workers employed within the United States. Employers and workers employed outside of the United States should consult the regulations that apply to them for further guidance.

SAPH08Z080300004

# TROUBLESHOOTING

EN08Z0803F300001

## HAZARD ALERT MESSAGES

Read and observe all Warning and Caution hazard alert messages in this publication. They provide information that can help prevent serious personal injury, damage to components, or both.

**⚠ WARNING**

**To prevent serious eye injury, always wear safe eye protection when you perform vehicle maintenance or service.**

### 1. TROUBLESHOOTING DIAGNOSTIC CHART

Significant wheel end component wear may enable the ABS warning light and cause a fault code to be set. Slow return of the steering wheel to its neutral position following completion of a turn may be another indication of wheel end component wear.

**Wheel-End Component Troubleshooting**

| Condition | Cause | Correction |
|---|---|---|
| Tires wear out quickly or have uneven tire tread wear. | Tires have incorrect air pressure. | Place the specified air pressure in the tires. |
| | Tires are out-of-balance. | Balance or replace the tires. |
| | Tandem axle alignment is incorrect. | Align the tandem axles. |
| | Toe-in setting is incorrect. | Adjust the toe-in to the specified setting. |
| | Steering arm geometry is incorrect. | Service the steering system as necessary. |
| | Wheel end play is excessive. | Readjust the wheel bearings. |

SAPH08Z080300005

# COMPONENT LOCATOR

EN08Z0803D100001

## 1. RS19-145 (QUADRAULIC™ DISC BRAKE)

**REPRESENTATIVE MODEL**

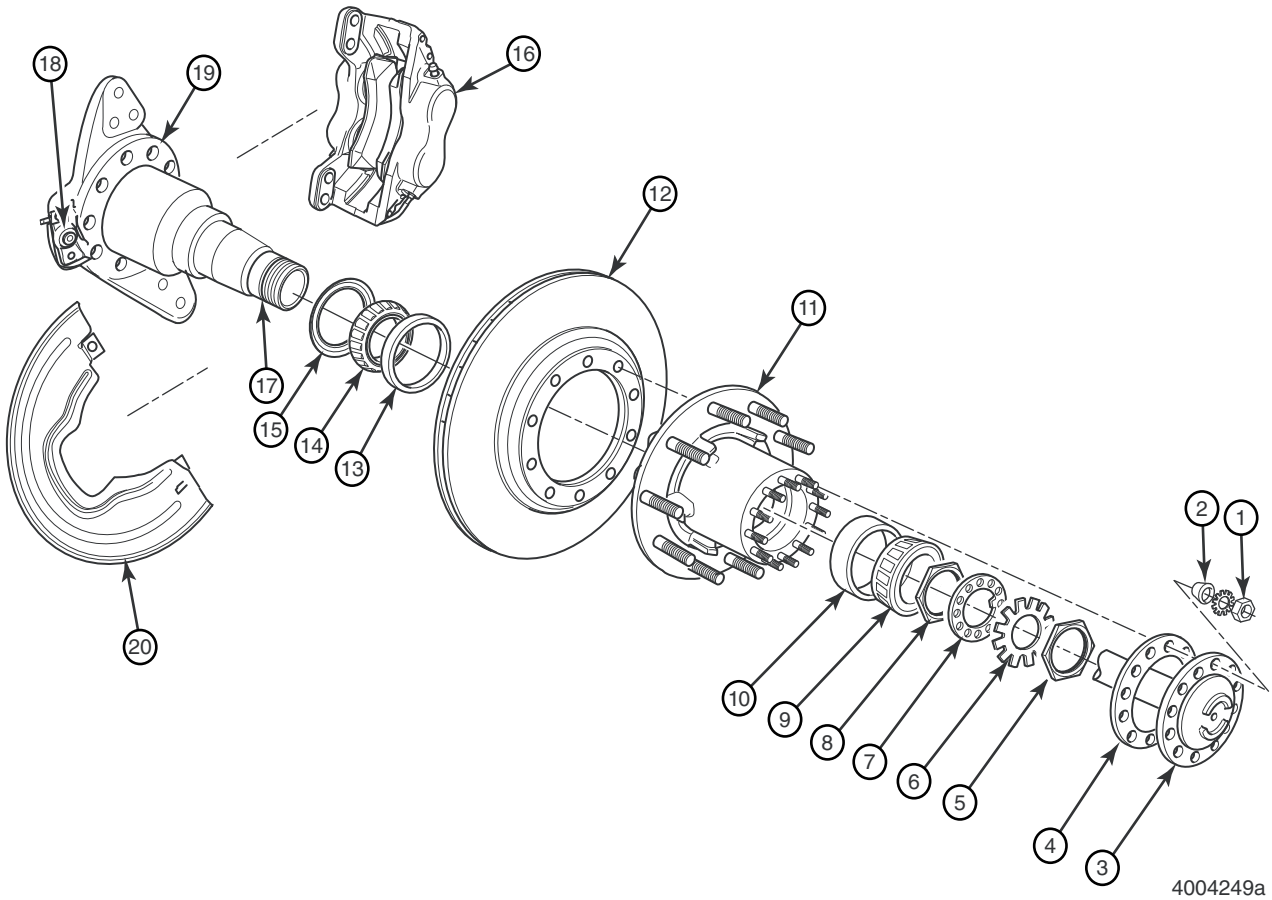


SAPH08Z080300006

| | | | |
|---|---|---|---|
| 1 | Nut and Star Lock Washer | 11 | Hub |
| 2 | Tapered Dowel | 12 | Disc Brake Rotor |
| 3 | Axle Shaft | 13 | Inner Race |
| 4 | Gasket | 14 | Inner Wheel Bearing |
| 5 | Outer Wheel Bearing Jam Nut | 15 | Oil Seal |
| 6 | Tabbed Lock Washer | 16 | Reaction Beam Caliper Assembly |
| 7 | Pierced Lock Ring with Keyway Tab | 17 | Spindle |
| 8 | Outer Wheel Bearing Adjusting Nut | 18 | ABS Sensor |
| 9 | Outer Wheel Bearing | 19 | Knuckle |
| 10 | Outer Race | 20 | Backing Plate |

## 2. RS21-145 (Q PLUS™ CAM BRAKE)

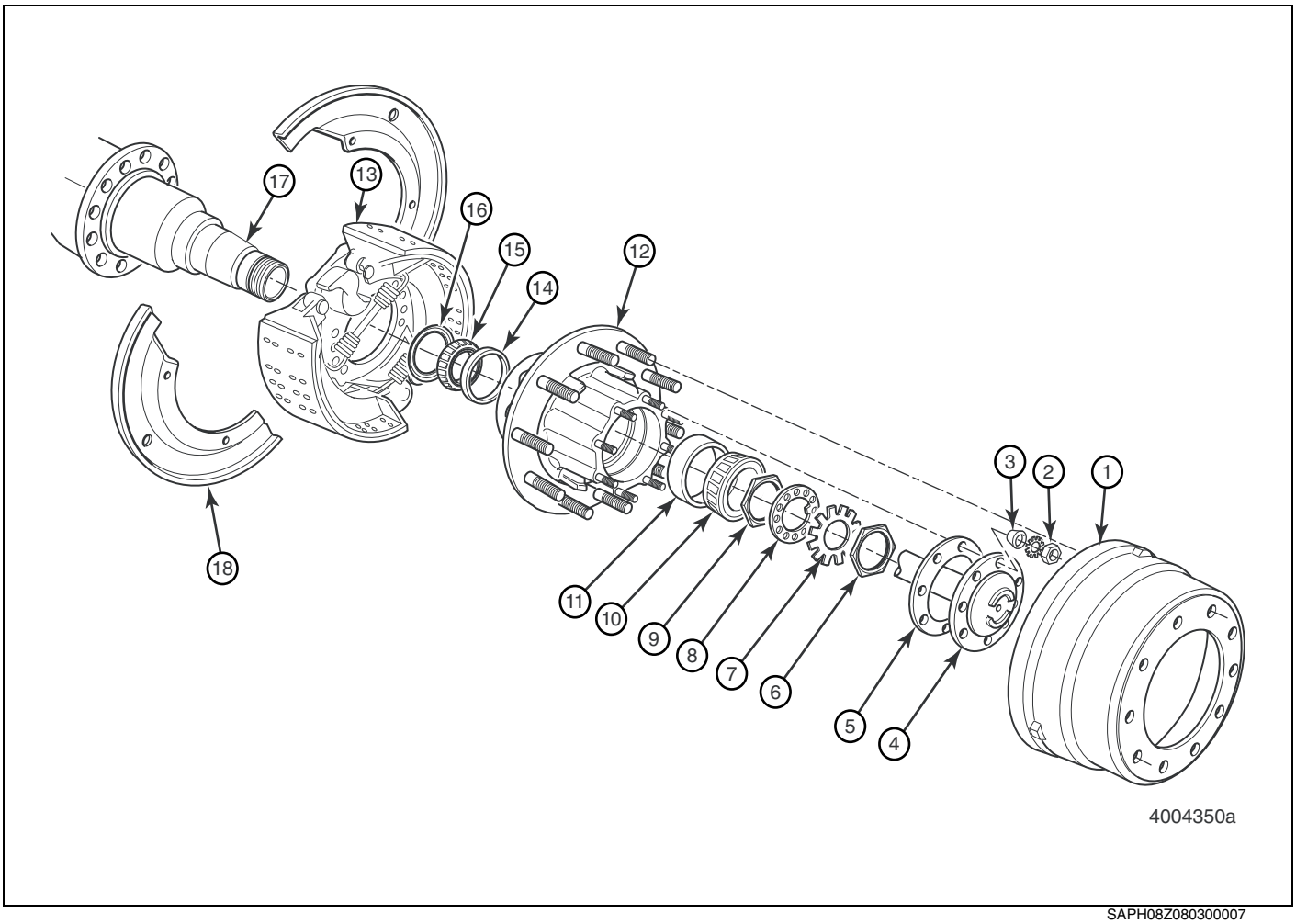


SAPH08Z080300007

| | | | |
|---|---|---|---|
| 1 | Brake Drum | 10 | Outer Wheel Bearing |
| 2 | Nut and Star Lock Washer | 11 | Outer Race |
| 3 | Tapered Dowel | 12 | Hub |
| 4 | Axle Shaft | 13 | Q Plus™ Cam Brake Assembly |
| 5 | Gasket | 14 | Inner Race |
| 6 | Outer Wheel Bearing Jam Nut | 15 | Inner Wheel Bearing |
| 7 | Tabbed Lock Washer | 16 | Oil Seal |
| 8 | Pierced Lock Ring with Keyway Tab | 17 | Spindle |
| 9 | Outer Wheel Bearing Adjusting Nut | 18 | Backing Plate |

## 3. TORQUE SPECIFICATIONS

(1) RS Series Wheel-End Components

**Conventional Wheel-End Torque Specifications**

| Axle Model | Hub and Drum or Rotor Assembly | Hub | Drum or Rotor | Initial Adjusting Nut Torque Lb-Ft (N•m) | Jam Nut Torque Lb-Ft (N•m) | Rotor Attach Bolt Size | Rotor Attach Bolt Torque Lb-Ft (N•m) | Axle Shaft Fastener Size | Axle Shaft Fastener Torque Lb-Ft (N•m)[1] |
|---|---|---|---|---|---|---|---|---|---|
| RS17 | 16157191000 | 15719 | 123557 | | 100-200 (136-339) | | | | 65-100 (88-136) |
| RS19 | | | | | | | | | |
| RS21 | 1415675107MTB | 15675 | 123207 | | | – | – | 5/8-18 | 150-230 (203-312) |
| RS23 | 16159431000 | 15943 | 123574 | | | – | – | | |

[1] Refer to Axle Division recommendations.

SAPH08Z080300008

# SPECIAL TOOL

EN08Z0803K100001

**1. WHEEL-END SEAL DRIVER APPLICATION**

To obtain these tools, call Arvin Meritor's Commercial Vehicle Aftermarket at 888-725-9355 to obtain Meritor tools and supplies.

(1) RS17-145 AND RS19-145 AXLE

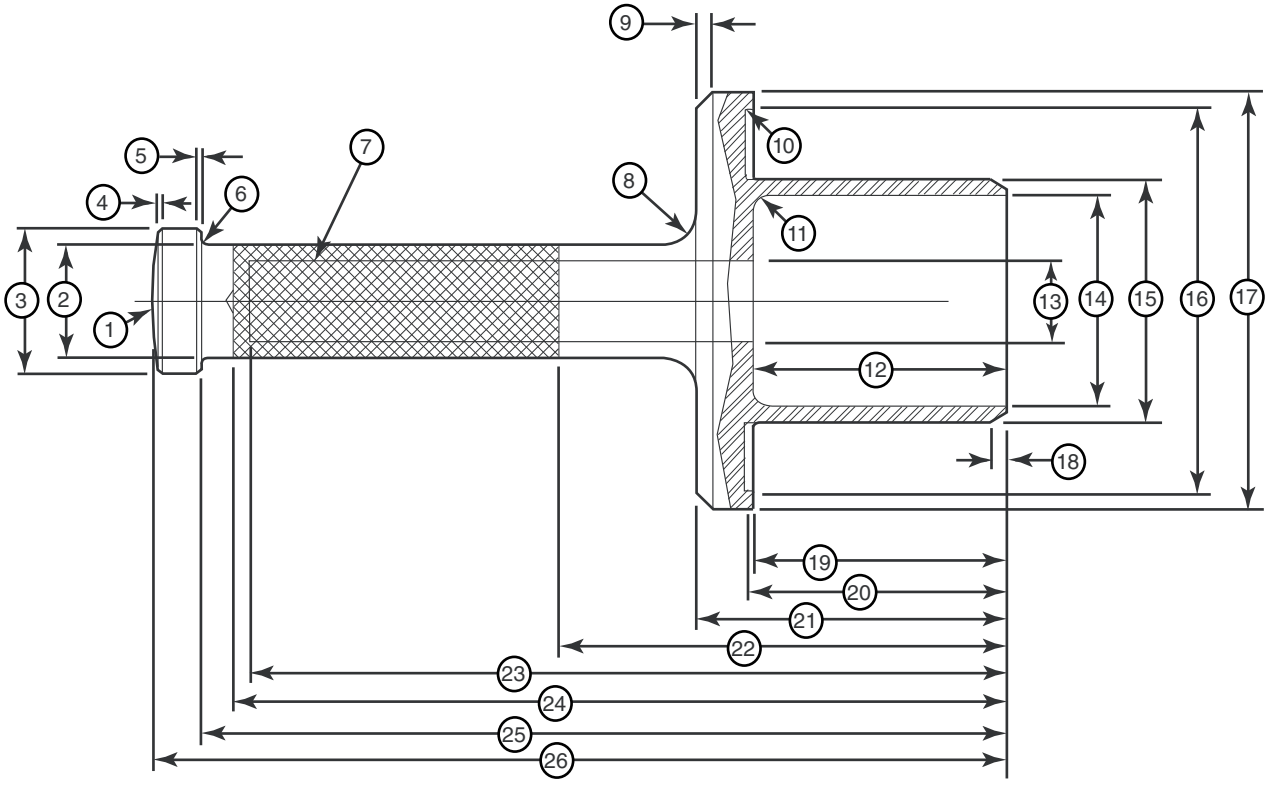


4004345a

| | | | | | | | |
|---|---|---|---|---|---|---|---|
| 1 | 6” (152.4 MM) SPHERE RADIUS | 9 | 0.25” (6.35 MM) X 45˚ | 16 | 5.25” (133.1 MM) DIAMETER | 22 | 4.25” (107.95 MM) |
| 2 | 1.75” (44.45 MM) DIAMETER | 10 | 0.03” (0.76 MM) X 45˚ | 17 | 5.63” (143 MM) DIAMETER | 23 | 6.25” (158.75 MM) |
| 3 | 2.25” (57.15 MM) DIAMETER | 11 | 0.06” (1.52 MM) R-TYP | 18 | 3.5” (88.9 MM) | 24 | 11” (279.4 MM) |
| 4 | 0.06” (1.52 MM) X 45˚ TYP | 12 | 0.25” (6.35 MM) RADIUS | 19 | 0.25” (6.35 MM) X 30˚ | 25 | 11.25” (285.75 MM) |
| 5 | 0.06” (1.52 MM) X 45˚ | 13 | 1.25” (31.75 MM) | 20 | 3.25” (82.55 MM) | 26 | 11.75” (298.45 MM) |
| 6 | 0.13” (3.3 MM) RADIUS | 14 | 2.75” (69.85 MM) | 21 | 3.37” (85.6 MM) | 27 | 12.5” (317.5 MM) |
| 7 | COARSE KNURL | 15 | 3.24” (82.296 MM) DIAMETER | | | | |
| 8 | 0.5” (12.7 MM) RADIUS | | | | | | |

SAPH08Z080300009

(2) RS21-145 AXLE (CAM BRAKE AND DISC BRAKE)

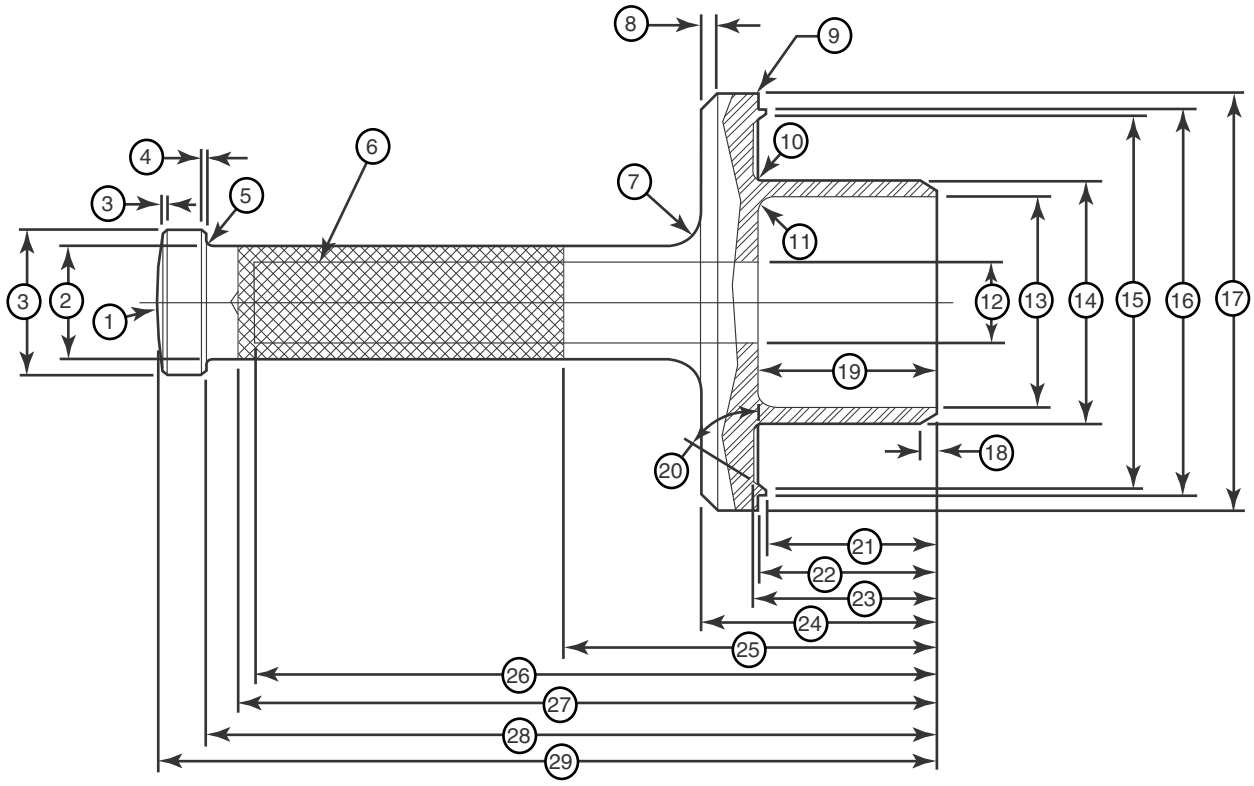


1 6” (152.4 MM) SPHERE RADIUS
2 1.75” (44.45 MM)
3 2.25” (57.15 MM) DIAMETER
4 0.06” (1.524 MM) X 45˚ TYP
5 0.06” (1.524 MM) X 45˚ TYP
6 0.13” (3.302 MM) RADIUS
7 COARSE KNURL
8 0.5” (12.7 MM) RADIUS
9 0.25” (6.35 MM) X 45˚
10 0.02” (0.5 MM) X 45˚ CHAMFER (2)
11 0.12” (3.05 MM) RADIUS
12 0.25” (6.35 MM) RADIUS
13 1.25” (31.75 MM) DIAMETER
14 3.25” (82.55 MM) DIAMETER
15 3.745” (95.123 MM) DIAMETER
16 5.775” (146.685 MM) DIAMETER
17 5.875” (149.225 MM) DIAMETER
18 6.25” (158.75 MM) DIAMETER
19 0.25” (6.35 MM) X 30˚
20 2.75” (69.85 MM)
21 60˚
22 0.11” (2.79 MM)
23 2.75” (69.85 MM)
24 2.81” (71.374 MM)
25 3.62” (91.95 MM)
26 5.75” (146.05 MM)
27 10.5” (266.7 MM)
28 10.75” (273.1 MM)
29 11.25” (285.75 MM)
30 12” (304.8 MM)

SAPH08Z080300010

# DISASSEMBLY

EN08Z0803H200001

## RS SERIES WHEEL END — REAR DRIVE AXLE

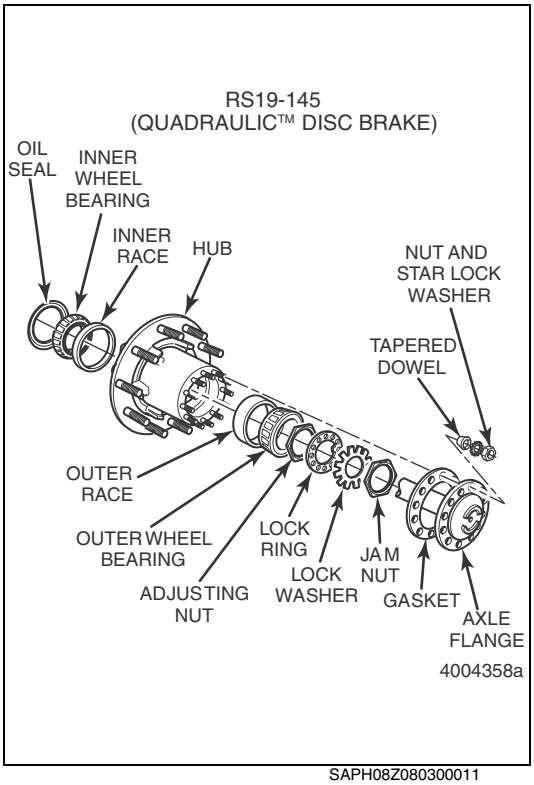


SAPH08Z080300011

### 1. RS19-145 — QUADRAULICT™ DISC BRAKE

(1) Park the vehicle on a level surface. Block the wheels to prevent the vehicle from moving. Set the parking brake.

(2) Raise the vehicle until the wheels are off the ground. Support the vehicle with safety stands.
(3) Remove the tire and wheel assembly.
(4) Remove the four fasteners securing the Quadraulic™ disc brake caliper assembly to the torque plate.
(5) Remove the caliper assembly from the torque plate.
(6) Remove the 12 nut fasteners and star lock washers securing the axle shaft to the hub.

**NOTICE**
**These nuts cannot be reused and must be replaced during assembly.**

(7) Tap the axle shaft flange on the strike bars to loosen the tapered dowels.
(8) Remove the tapered dowels, axle shaft and gasket.
(9) Remove the fastening hardware securing the wheel bearings.
   a. Bend back the tabs of the tabbed lock washer holding the outer wheel bearing jam nut.
   b. Remove the outer wheel bearing jam nut, the tabbed lock washer, the pierced lock ring with keyway tab and the outer wheel bearing adjusting nut from the spindle.
(10) Carefully rock the hub from side-to-side to free the outer wheel bearing. Remove the outer wheel bearing. Remove the hub and rotor assembly.
(11) Using a seal puller, remove the inner wheel bearing oil seal from the hub. Discard the seal.
(12) Remove the inner wheel bearing.
(13) Inspect the bearings, races and spindle for signs of damage. Refer to PREPARE PARTS FOR ASSEMBLY on pages AX03-16 to 19.

**NOTICE**
**Worn or damaged wheel-end components must be replaced as a set.**

(14) If damage to either race is observed, tap out the inner and outer races with a brass drift and discard.
(15) Use the correct cleaning solution to remove the old lubricant from all parts. Refer to PREPARE PARTS FOR ASSEMBLY on pages AX03-16 to 19.

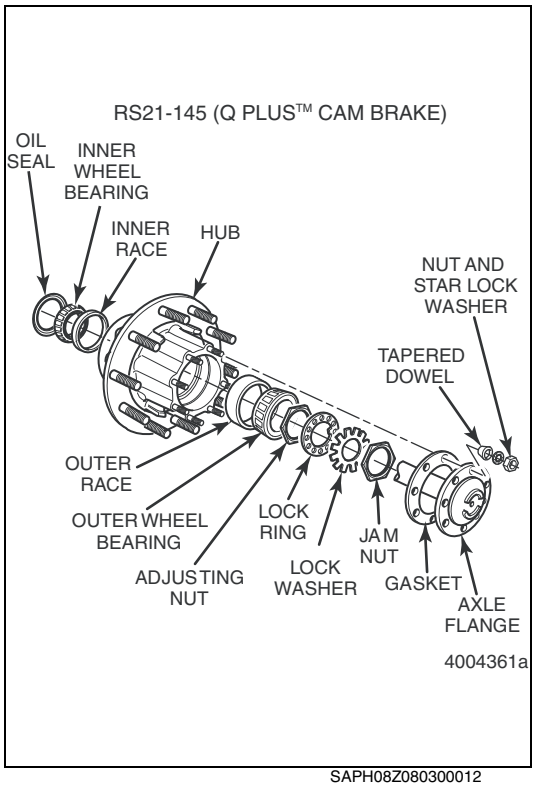


SAPH08Z080300012

**2. RS21-145 — Q PLUS™ CAM BRAKE**

(1) Park the vehicle on a level surface. Block the wheels to prevent the vehicle from moving. Set the parking brake.

(2) Raise the vehicle until the wheels are off the ground. Support the vehicle with safety stands.
(3) Remove the tire and wheel assembly.
(4) Cage the brake chamber.
(5) Remove the brake drum.
(6) Remove the eight nuts and star lock washers securing the axle shaft to the hub.
(7) Tap the axle shaft flange on the strike bars to loosen the tapered dowels.
(8) Remove the tapered dowels, axle shaft and gasket.
(9) Remove the fastening hardware securing the outer wheel bearing.
   a. Bend back the tabs of the tabbed lock washer holding the outer wheel bearing jam nut.
   b. Remove the outer wheel bearing jam nut.
   c. Remove the tabbed lock washer, the pierced lock ring with keyway tab and the outer wheel bearing adjusting nut from the spindle.
(10) Carefully rock the hub from side-to-side to free the outer wheel bearing. Remove the outer wheel bearing and hub.
(11) Using a seal puller, remove the inner wheel bearing oil seal from the hub. Discard the seal.
(12) Remove the inner wheel bearing.
(13) Inspect the bearings, races and spindle for signs of damage.

**NOTICE**
**Worn or damaged wheel-end components must be replaced as a set.**

(14) If damage to either race is observed, tap out the inner and outer races with a brass drift and discard.
(15) Use the correct cleaning solution to remove the old lubricant from all parts. Refer to PREPARE PARTS FOR ASSEMBLY on pages AX03-16 to 19.

# PREPARE PARTS FOR ASSEMBLY

EN08Z0803H200002

## HAZARD ALERT MESSAGES

Read and observe all Warning and Caution hazard alert messages in this publication. They provide information that can help prevent serious personal injury, damage to components, or both.

**⚠ WARNING**

**To prevent serious eye injury, always wear safe eye protection when you perform vehicle maintenance or service.**

**Replace damaged or out-of-specification axle components. Do not bend, repair or recondition axle components by welding or heat-treating. A bent axle beam reduces axle strength, affects vehicle operation and voids Meritor's warranty. Serious personal injury and damage to components can result.**

1. **REPLACE WORN OR DAMAGED PARTS**
   Do not repair or recondition wheel-end components. Replace damaged, worn or out-of-specification components. Do not mill or machine any components.

**⚠ WARNING**

**Solvent cleaners can be flammable, poisonous and cause burns. Examples of solvent cleaners are carbon tetrachloride, and emulsion-type and petroleum-base cleaners. Read the manufacturer's instructions before using a solvent cleaner, then carefully follow the instructions. Also follow the procedures below.**

- **Wear safe eye protection.**
- **Wear clothing that protects your skin.**
- **Work in a well-ventilated area.**
- **Do not use gasoline, or solvents that contain gasoline. Gasoline can explode.**
- **You must use hot solution tanks or alkaline solutions correctly. Read the manufacturer's instructions before using hot solution tanks and alkaline solutions. Then carefully follow the instructions.**

**⚠ CAUTION**

**Do not use hot solution tanks or water and alkaline solutions to clean ground or polished parts. Damage to parts can result.**

**2. CLEAN, DRY AND INSPECT PARTS**

(1) Ground or Polished Parts

a. Use a cleaning solvent to clean the ground or polished parts and surfaces. Kerosene or diesel fuel can be used for this purpose. DO NOT USE GASOLINE.

b. Do NOT clean ground or polished parts in a hot solution tank or with water, steam or alkaline solutions. These solutions will cause corrosion of the parts.

c. Thoroughly clean the hub cavity with spray degreaser. The cavity must be free of any metal chips or dirt.

d. To remove grease from a wheel end, use a stiff fiber brush, not steel, and kerosene or diesel fuel, not gasoline. Allow the parts to dry. Note that any solvent residue must be completely wiped dry since it may either dilute the grease or oil or prevent the lubricant from correctly adhering to the wheel-end components.

e. Clean and inspect the wheel bearings, race, spindle bearing journals and hub. Bearings should be cleaned in a suitable non-flammable solvent and dried with either compressed air or a lint-free rag.

**NOTICE**

**If compressed air is used, do not spin dry the bearings as the rollers may score due to lack of lubricant. Ensure that the air line is moisture free.**

**3. ROUGH PARTS**

Rough parts can be cleaned with the ground or polished parts. Rough parts also can be cleaned in hot solution tanks with a weak alkaline solution. Parts must remain in the hot solution tanks until they are completely cleaned and heated.

**4. DRY CLEANED PARTS**

Parts must be dried immediately after cleaning. Dry parts with clean paper or rags, or compressed air. Do not dry bearings by spinning with compressed air.

**5. PREVENT CORROSION ON CLEANED PARTS**

Apply a light oil to cleaned and dried parts that are not damaged and are to be immediately assembled. Do NOT apply oil to the brake linings or the brake drums.

If the parts are to be stored, apply a good corrosion preventative to all surfaces. Do NOT apply the material to the brake linings or the brake drums. Store the parts inside special paper or other material that prevents corrosion.

**NOTICE**

**All tapered joints must be clean and dry with no lubrication or corrosion preventative applied to the mating surfaces.**

## INSPECTION WHEEL-END COMPONENTS

**1. FOLLOWING DISASSEMBLY AND CLEANING OF THE WHEEL-END COMPONENTS, INSPECT THE SPINDLE JOURNALS, HUB AND WHEEL BEARINGS FOR SIGNS OF WEAR AND DAMAGE.**

**NOTICE**

**Damage to either the wheel bearing or race will require replacement of both bearings and races as a set.**

**2. INSPECT THE CUP, THE CONE AND THE ROLLERS AND CAGE OF THE WHEEL BEARINGS FOR THE FOLLOWING DEFECTS.**

- Cracked or broken separators
- Broken or cracked rollers
- Flaked areas on rollers or races
- Spalled rollers or races
- Overheated bearings
- Brinelled races
- Scored or etched rollers or races
- Pitting of rollers or races
- Wear bands on critical surfaces
- Rust or corrosion on critical surfaces

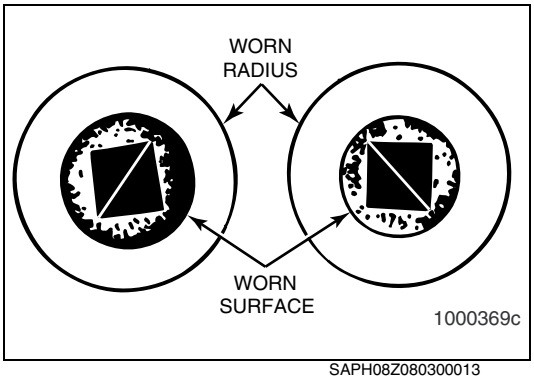


SAPH08Z080300013

If any of the following conditions exist, you must replace the bearing.

- The center of the large diameter end of the rollers is worn level or below the outer surface.
- The radius at the large diameter end of the rollers is worn to a sharp edge.

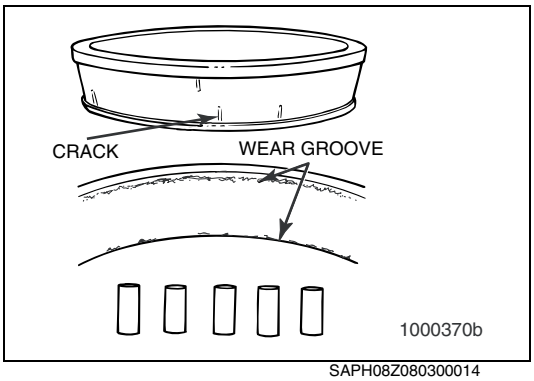


SAPH08Z080300014

- There is a visible roller groove in the cup or the cone inner race surfaces. The groove can be seen at the small or large diameter end of both parts.
- There are deep cracks or breaks in the cup, the cone inner race or the roller surfaces.

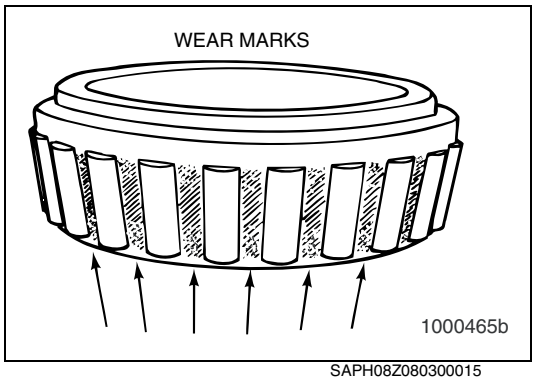


SAPH08Z080300015

- There are bright wear marks on the outer surface of the roller cage.

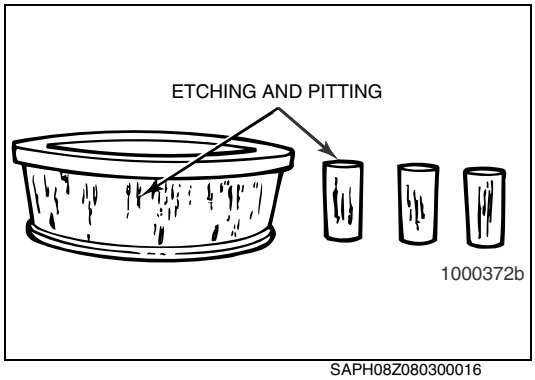


SAPH08Z080300016

- There is damage on the rollers and on the surfaces of the cup and the cone inner race that touch the rollers.

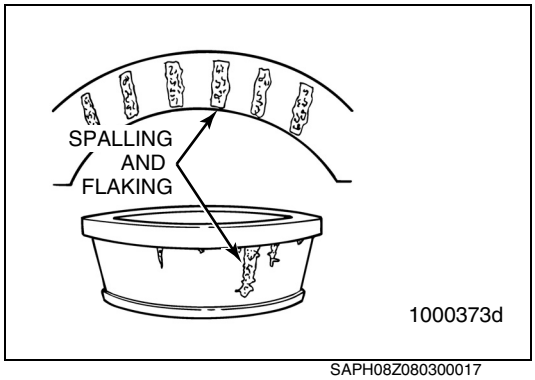


SAPH08Z080300017

- There is damage on the cup and the cone inner surfaces that touch the rollers.

# ASSEMBLY

EN08Z0803H200003

## RS SERIES WHEEL END — REAR DRIVE AXLE

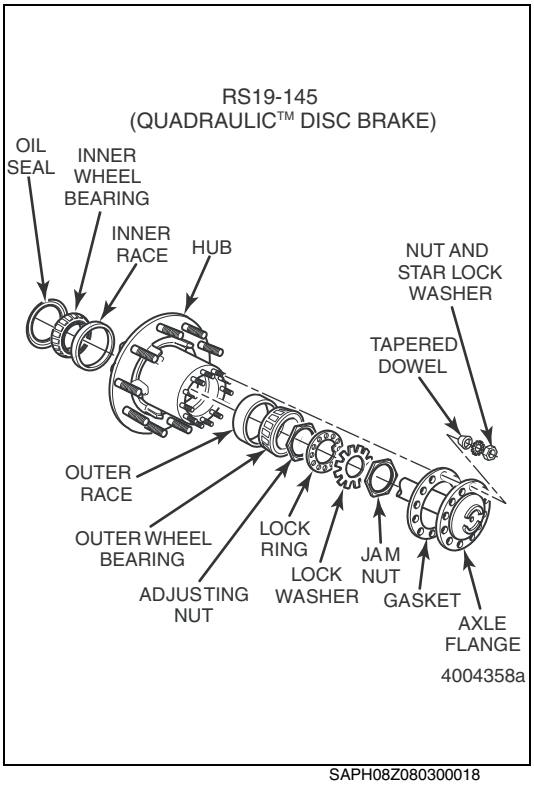


SAPH08Z080300018

### 1. RS19-145 — QUADRAULIC™ DISC BRAKE

(1) If removed during the previous wheel-end disassembly procedure, install the torque plate and backing plate onto the knuckle.

(2) Lubricate both the inner and outer wheel bearings. Dip the wheel bearings into the same lubricant as used in the differential carrier housing. Refer to LUBRICATION AND MAINTENANCE on pages AX03-32 to 33.

- **If race or wheel bearing replacement is required as a result of damage observed during the disassembly procedure:** Replace these components as a set. If necessary, drive new inner and outer bearing races into the hub.

(3) Insert the inner wheel bearing into the hub bore.
(4) Install a new oil seal using the correct seal driver. Refer to SPECIAL TOOL on pages AX03-12 to 13.
(5) Carefully install the hub and rotor assembly onto the spindle. Ensure that the assembly is correctly seated.

**⚠ CAUTION**
**Do not assemble dry. Damage to wheel end components may result.**

(6) Before the outer wheel bearing is installed, fill the wheel cavity with the same lubricant as used in the differential carrier housing. Typically, one-half pint of lubricant is required.
(7) Insert the outer wheel bearing into the hub bore.
(8) Secure the hub and rotor assembly on the spindle using the outer wheel bearing adjusting nut. The adjusting nut must be installed so that the nipple faces outward toward the axle shaft flange. Tighten finger-tight.
(9) Tighten the outer wheel bearing adjusting nut to 100 lb-ft (136 N·m) while rotating the hub in both directions. This will ensure correct bearing-to-hub bore contact. Refer to TORQUE SPECIFICATIONS on page AX03-11.
(10) Back off the outer wheel bearing adjusting nut one full turn.
(11) Retighten the outer wheel bearing adjusting nut to 50 lb-ft (68 N·m) while rotating the hub.
(12) Back off the outer wheel bearing adjusting nut 1/3 turn.
(13) Install the pierced lock ring so that the inner tab locks into the spindle keyway and the outer wheel bearing adjusting nut nipple engages one of the through holes on the lock ring.
(14) Install a new tabbed lock washer onto the spindle.
(15) Install the outer wheel bearing jam nut. Tighten to 100-250 lb-ft (136-339 N·m). Refer to TORQUE SPECIFICATIONS on page AX03-11.
(16) Measure bearing end play with a dial indicator. Bearing end play should be 0.001-0.005-inch (0.025-0.127 mm). Refer to ADJUSTMENT on pages AX03-30 to 31.
(17) If necessary, adjust bearing end play to obtain the correct dial indicator reading. Refer to ADJUSTMENT on pages AX03-30 to 31.
(18) Bend two opposed lock washer tabs over the outer wheel bearing jam nut to lock it in position.
(19) Install the axle shaft and gasket.
(20) Install the tapered dowels.
(21) Secure the axle shaft with 12 star lock washers and 12 new nuts. Tighten to 75-115 lb-ft (102-156 N·m).
(22) Install the Quadraulic™ disc brake caliper assembly onto the torque plate with four fasteners and washers. Tighten to 320-360 lb-ft (435-490 N·m). Refer to TORQUE SPECIFICATIONS on page AX03-11.

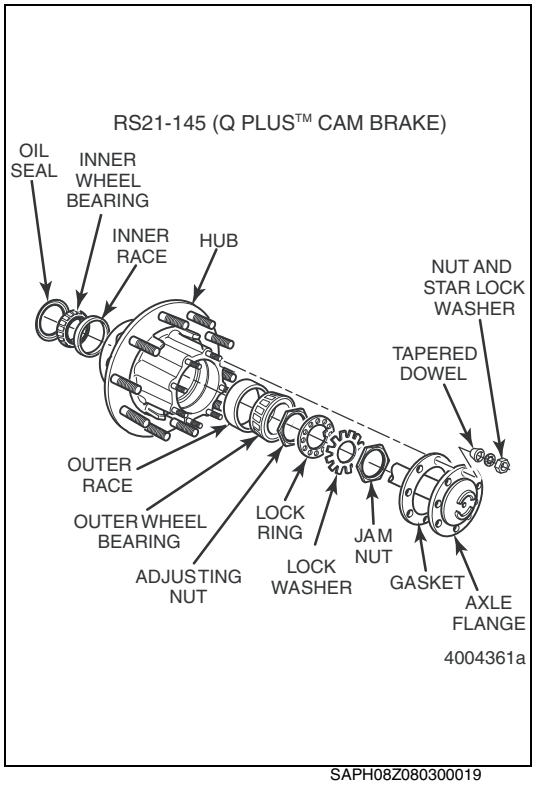


SAPH08Z080300019

(23) Check the rear end differential fluid level by removing the oil fill plug from the carrier or housing bowl. If necessary, add the specified fluid through the carrier or housing bowl oil fill hole. Fill so that the fluid level is even with the bottom of the fill plug hole.

### 2. RS21-145 — Q PLUS™ CAM BRAKE

(1) Lubricate both the inner and outer wheel bearings. Dip the wheel bearings into the same lubricant as used in the differential carrier housing. Refer to LUBRICATION AND MAINTENANCE on pages AX03-32 to 33.

- **If race or wheel bearing replacement is required as a result of damage observed during the disassembly procedure:** Replace these components as a set. If necessary, drive new inner and outer bearing races into the hub.

(2) Insert the inner wheel bearing into the hub bore.
(3) Install a new oil seal using the correct seal driver. Refer to SPECIAL TOOL on pages AX03-12 to 13
(4) Carefully install the hub assembly onto the spindle. Ensure that the assembly is correctly seated.

**⚠ CAUTION**
**Do not assemble dry. Damage to wheel end components may result.**

(5) Before the outer wheel bearing is installed, fill the wheel cavity with the same lubricant as used in the differential carrier housing. Typically, one-half pint of lubricant is required.
(6) Insert the outer wheel bearing into the hub bore.
(7) Secure the hub assembly on the spindle using the outer wheel bearing adjusting nut. The adjusting nut must be installed so that the nipple faces outward toward the axle shaft flange. Tighten finger-tight.
(8) Tighten the outer wheel bearing adjusting nut to 100 lb-ft (136 N·m) while rotating the hub in both directions. This will ensure correct bearing-to-hub bore contact. Refer to TORQUE SPECIFICATIONS on page AX03-11.
(9) Back off the outer wheel bearing adjusting nut one full turn.
(10) Retighten the outer wheel bearing adjusting nut to 50 lb-ft (68 N·m) while rotating the hub.
(11) Back off the outer wheel bearing adjusting nut 1/3 turn.
(12) Install the pierced lock ring so that the inner tab locks into the spindle keyway and the outer wheel bearing adjusting nut nipple engages one of the through holes on the lock ring.
(13) Install a new tabbed lock washer onto the spindle.
(14) Install the outer wheel bearing jam nut. Tighten to 100-250 lb-ft (136-339 N·m). Refer to TORQUE SPECIFICATIONS on page AX03-11.
(15) Measure bearing end play with a dial indicator. Bearing end play should be 0.001-0.005-inch (0.025-0.127 mm). Refer to ADJUSTMENT on pages AX03-30 to 31.
(16) If necessary, adjust bearing end play to obtain the correct dial indicator reading. Refer to ADJUSTMENT on pages AX03-30 to 31.
(17) Bend two opposed lock washer tabs over the outer wheel bearing jam nut to lock it in position.
(18) Install the axle shaft and gasket.
(19) Install the tapered dowels.
(20) Secure the axle shaft with eight star lock washers and nuts. Tighten to 150-230 lb-ft (203-312 N·m).
(21) Install the brake drum onto the hub.
(22) Check the rear end differential fluid level by removing the oil fill plug from the carrier or housing bowl. If necessary, add the specified fluid through the carrier or housing bowl oil fill hole. Fill so that the fluid level is even with the bottom of the fill plug hole.

**3. STUDS AND NUTS**

The following warnings are to alert you to stud and nut conditions and maintenance procedures that can affect your safety and the integrity of the vehicle and its components.

Carefully read the warnings before you install disc wheels.

**⚠ WARNING**

**Replace bent, loose, broken or stripped studs. When you replace a stripped stud, always replace the stud on each side of the stripped stud as well. Even if the adjoining studs are not cracked, they have sustained fatigue damage, which can cause the wheels to loosen and separate from the vehicle. Serious personal injury and damage to components can result.**

**Always replace a serrated stud, bolt, with a new one. Do not reuse a serrated stud, which will not tighten correctly and can cause the wheels to loosen and separate from the vehicle. Serious personal injury and damage to components can result.**

**Do not apply paint to mounting surfaces, studs or nuts. Paint decreases a fastener assembly's capability to maintain clamp load, which can cause wheels to loosen and separate from the vehicle. Serious personal injury and damage to components can result.**

**Ensure that you do not damage the stud threads. Damaged threads will not allow the stud to provide the required clamp load to support the wheel retention system. The wheels can loosen and separate from the vehicle. Serious personal injury and damage to components can result.**

**Check that stud standout is correct for stud-piloted wheels. If standout exceeds specifications even though the correct torque is used, the cap nut can bottom against the hub stud and loosen both wheels and the brake drum, which will cause the wheels to separate from the vehicle. If standout is too short, the cap nut will overload and crack, causing the inner and dual wheels to separate from the vehicle. Serious personal injury and damage to components can result.**

**Install right-hand studs onto the right side of the vehicle and left-hand studs onto the left side of the vehicle. Studs that are not installed correctly can loosen, which can cause the wheels to loosen and separate from the vehicle. Serious personal injury and damage to components can result.**

**Do not lubricate the studs or nut threads. Lubricants will not enable you to tighten the fasteners correctly, which causes excessive clamp load. The studs can break and cause the wheels to loosen and separate from the vehicle. Serious personal injury can result.**

**Install aluminum wheel nuts onto an aluminum disc wheel. Do not install steel wheel nuts. Steel wheel nuts can damage an aluminum wheel or cause the dual wheels to loosen and separate from the vehicle. Serious personal injury and damage to components can result.**

**Install steel wheel nuts onto steel wheels. Do not install aluminum wheel nuts. The extension on an aluminum wheel nut can bottom against the hub flange or brake drum before the disc wheel is clamped correctly, which can cause the wheels to separate from the vehicle. Serious personal injury and damage to components can result.**

**Install the nuts with the correct thread size onto the studs. A nut with an incorrect thread size will not turn freely on the stud or will fit loosely on the stud. The thread can strip, which can cause loss of clamp load. The wheels can loosen and separate from the vehicle. Serious personal injury and damage to components can result.**

**Install the correct wheel system components for the application. Do not mix wheel system components. The wheels can loosen and separate from the vehicle. Serious personal injury and damage to components can result.**

**Add two drops of oil between the nut flange and the hex portion of the swivel area at each installation if you reinstall the two-piece flange nuts that have been in service. Without lubrication, the fasteners may not produce adequate clamp load, and the wheel(s) can loosen and separate from the vehicle. Serious personal injury and damage to components can result.**

(1) Check the studs. Repair or replace loose, bent, stripped or broken studs.

(2) Check for correct serrated stud standout.
   a. Figure shows correct standout.
   b. Figure shows incorrect standout.

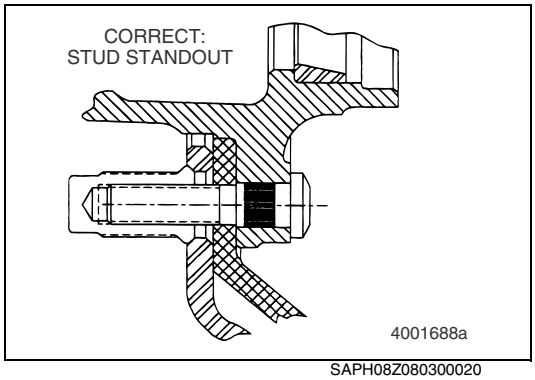

SAPH08Z080300020

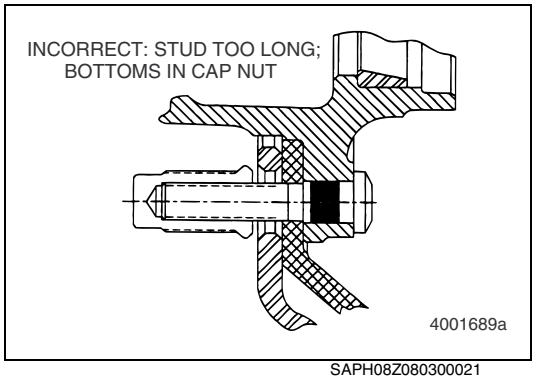

SAPH08Z080300021

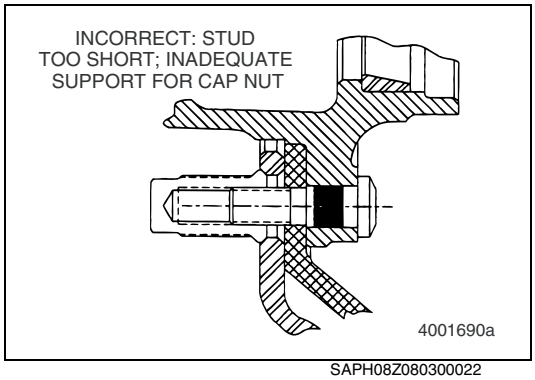

SAPH08Z080300022

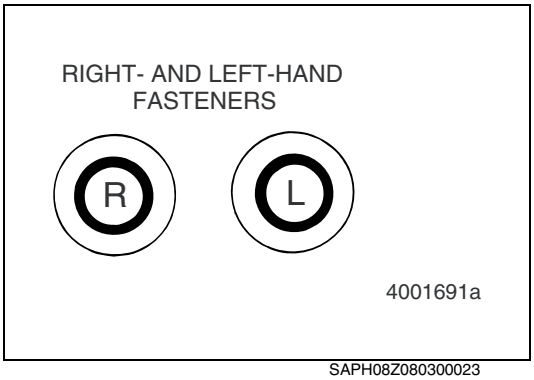


SAPH08Z080300023

(3) Serrated studs do not usually interchange with those in various hub part numbers. Check the application. Call ArvinMeritor's Customer Service Center at 800-535-5560 for more information.

(4) Check for **R** and **L** stamped in the end of the stud. Install right-hand studs onto the right side of the vehicle, and left-hand studs onto the left side of the vehicle.

(5) Some manufacturers color code studs. Check the manufacturer's instructions to verify the color code used.

(6) Install the correct nut into all applications. Do not install rusty, galled or worn nuts. Ensure that you use the correct nuts in the following installations.

- Install 33 mm hex two-piece flange nuts into ISO 285.75 mm bolt circle diameter (BC) and ISO 335 mm BC systems.
- Install 1-1/2-inch hex two-piece flange nuts into a 275 mm system with M22 x 1.5 serrated studs. Do not install 1-1/2-inch hex two-piece flange nuts onto M22 x 1.5 serrated studs when 33 mm two-piece hex nuts are used on the CentroMount-8$^{TM}$ system.

(7) Install aluminum wheel nuts onto aluminum wheels. Do not install steel wheel nuts. An aluminum wheel nut has an extension to accommodate the thickness of the aluminum.

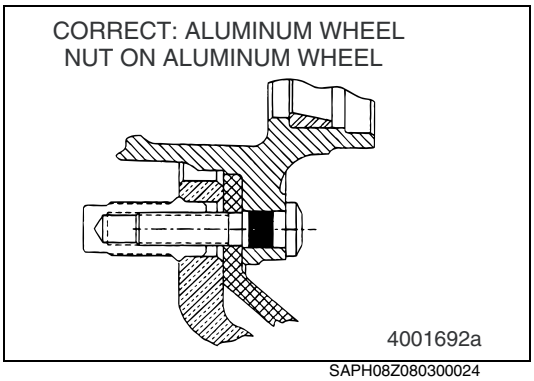


SAPH08Z080300024

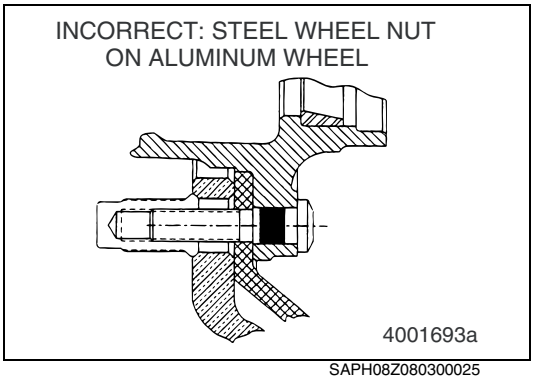


SAPH08Z080300025

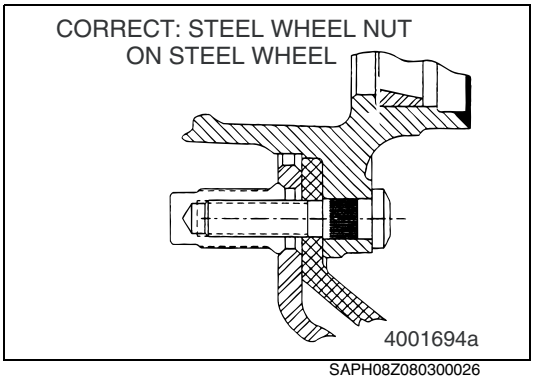


SAPH08Z080300026

(8) Install steel wheel nuts onto steel wheels. Do not install aluminum wheel nuts. The extension of the aluminum wheel nut can bottom against the hub flange or brake drum before the disc is clamped correctly.

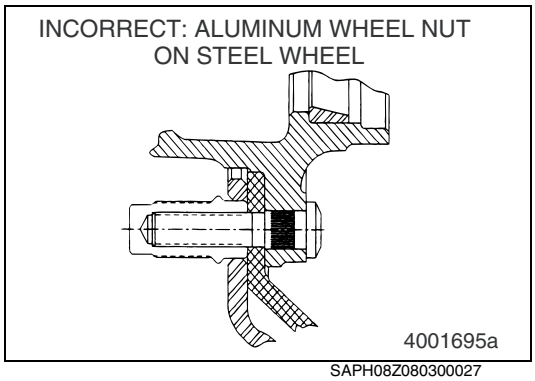

SAPH08Z080300027

(9) Install nuts with the correct thread size onto the studs. A correct thread size enables the nut to turn freely on the stud. An incorrect nut will fit very loosely on the stud thread, which can cause the thread to strip.

(10) Check the extension of the stud through the nut after you tighten the nut to the specified torque.

- **If less than two threads extend through the nut, or more than 3/8-inch (9.5 mm) of the stud extends through the nut:** Check all parts to verify that they are correct for the wheel system you will install onto the vehicle.

(11) Ensure that the nut and wheel mate correctly. Ensure that you install the correct components onto the wheel systems.

- **If the wheel has a ball seat bolt hole pattern:** The nut must have a spherical surface that seats in the ball seat.
- **If the wheel has a cylindrical bolt hole pattern:** The nut must have a flat surface that seats against the wheel.

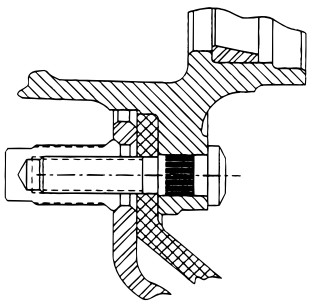

CORRECT: BALL SEAT WHEEL ON BALL SEAT HUB

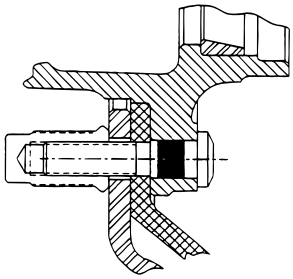

INCORRECT: HUB-PILOTED WHEEL ON BALL SEAT HUB

4001697b

SAPH08Z080300028

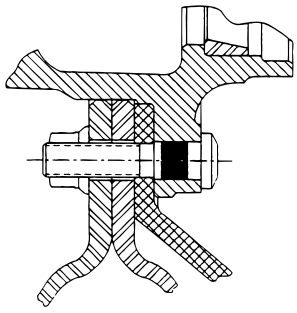

CORRECT: HUB-PILOTED WHEELS ON HUB-PILOTED HUB

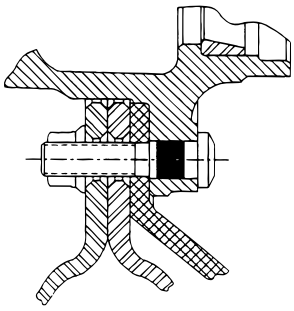

INCORRECT: BALL SEAT WHEELS ON HUB-PILOTED HUB

4001699b

SAPH08Z080300029

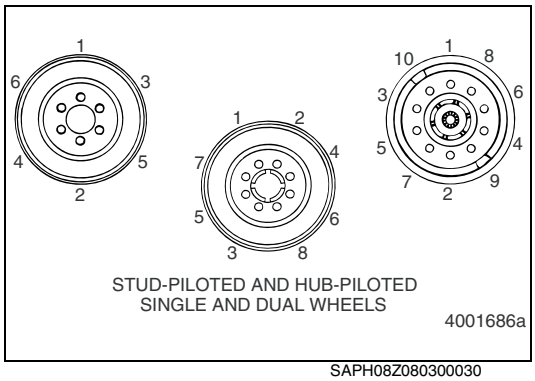


STUD-PILOTED AND HUB-PILOTED
SINGLE AND DUAL WHEELS
4001686a

SAPH08Z080300030

(12) Follow the disc wheel manufacturer's fastener tightening sequence when you install fasteners to help ensure a higher and more uniform clamp load. Always check fasteners at the wheel manufacturer's recommended service intervals.

(13) Add two drops of oil between the nut flange and the hex portion of the swivel area at each installation if you reinstall the two-piece flange nuts that have been in service. Do not oil the stud or nut threads.

(14) Retighten all wheel nuts on all systems at 50-100 miles (80-160 km) to the correct torque specifications.

(15) Use the correct installation tools.

(16) Ensure that the gross weight does not exceed gross vehicle weight (GVW). Ensure that the axle loads do not exceed gross axle weight ratings (GAWR).

## STUD REPLACEMENT PROCEDURES

**⚠ WARNING**

**Do not use a hammer to remove or install studs. A hammer can cause impact damage to the bearing raceway, which will reduce bearing life. Serious personal injury and damage to components can result.**

**Ensure that you do not damage stud threads during installation procedures. Damaged threads will not allow the stud to provide the required clamp to support the wheel retention system. The wheels can loosen and separate from the vehicle. Serious personal injury and damage to components can result.**

If a stud is stripped and needs replacement, use one of the following procedures.

### 1. PREFERRED METHOD — REPLACING STUDS WITH THE HUB INSTALLED ONTO THE VEHICLE

**⚠ WARNING**

**Park the vehicle on a level surface. Block the wheels to prevent the vehicle from moving. Support the vehicle with safety stands. Do not work under a vehicle supported only by jacks. Jacks can slip and fall over. Serious personal injury and damage to components can result.**

(1) Park the vehicle on a level surface. Block the wheels to prevent the vehicle from moving.

(2) Raise the vehicle so that the front wheels are off the ground. Support the vehicle with safety stands.

(3) Mark the wheel and hub relationship. Remove the wheel and tire assembly. Use a paint stick to mark the wheel studs you are removing. Do not reuse the studs.

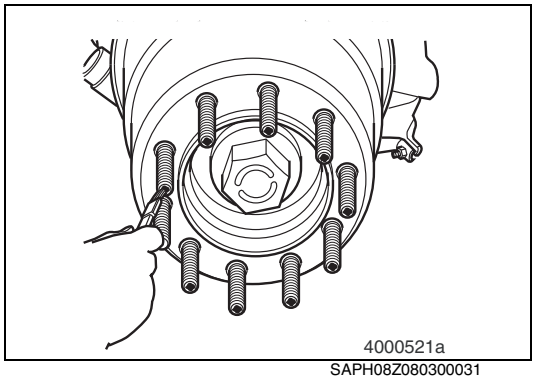

4000521a

SAPH08Z080300031

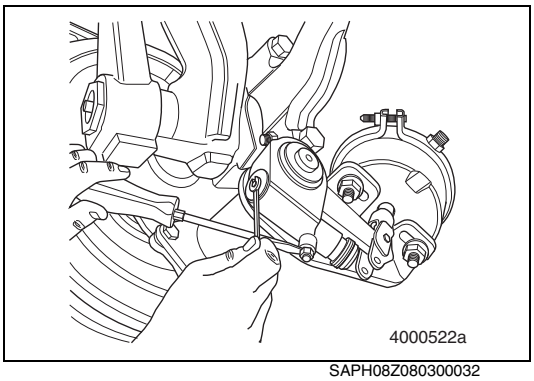

SAPH08Z080300032

(4) If necessary, back off the brake at the slack adjuster until the brake shoes retract and the drum clears the linings.

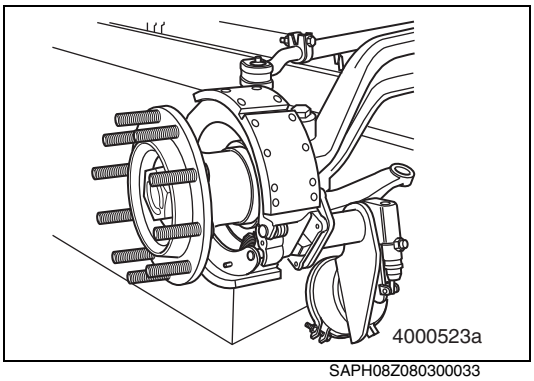

SAPH08Z080300033

(5) Remove the brake drum.

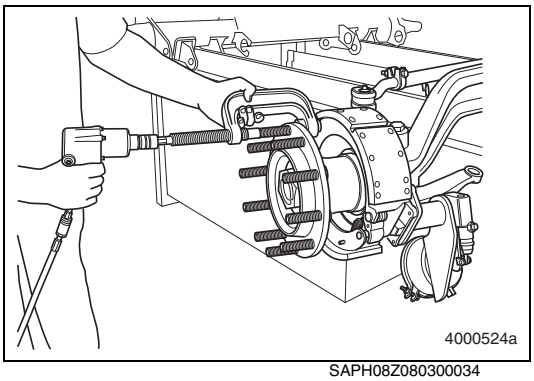

SAPH08Z080300034

(6) Use a 1/2-inch (12.7 mm) drive impact wrench and a ball joint removal kit to remove the studs.

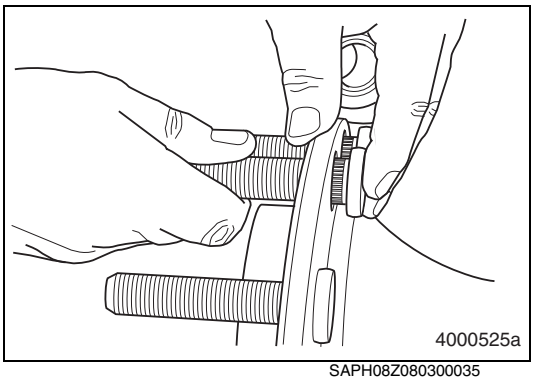

SAPH08Z080300035

(7) Use a crocus cloth to clean all the flat surfaces on the wheel band hub.

(8) Position the new studs into the hub. Align the stud knurls with the impressions in the hub stud hole.

**⚠ WARNING**
**Do not lubricate studs or nut threads. Lubricants will not enable you to tighten fasteners correctly, which causes excessive clamp load. Studs can break and cause wheels to loosen and separate from the vehicle. Serious personal injury can result.**

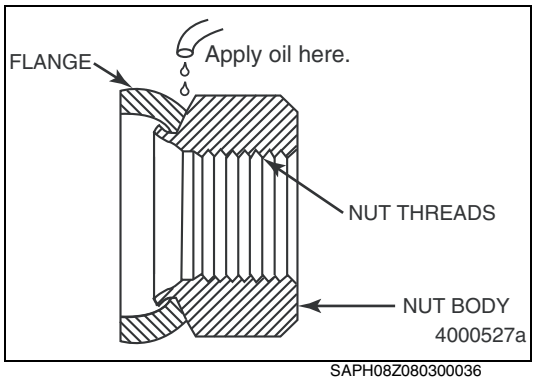

SAPH08Z080300036

(9) Add two drops of oil between the body and flange on the stud nuts. Do not use more than two drops of oil.

**⚠ WARNING**
**Install nuts with the correct thread size onto the studs. A nut with an incorrect thread size will not turn freely on the stud or will fit loosely on the stud. The thread can strip, which can cause loss of clamp load. The wheels can loosen and separate from the vehicle. Serious personal injury and damage to components can result.**

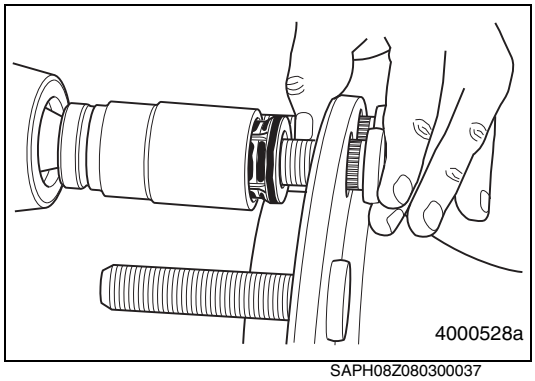

SAPH08Z080300037

(10) Position the nuts onto the studs. Use a 1/2-inch (12.7 mm) drive impact wrench to draw the stud into the hub. Do not exceed 300 lb-ft (408 N·m).

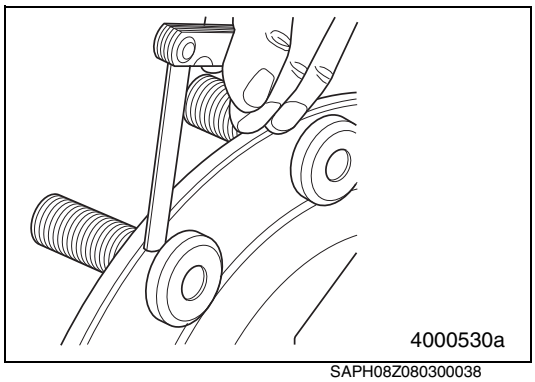

SAPH08Z080300038

(11) Use a 0.0015-inch (0.0381 mm) feeler gauge to check that the stud is correctly seated.

- If the stud is not correctly seated: Remove the stud, clean all surfaces and install a new stud as described previously.
- If the stud is still not correctly seated: Replace the hub.

(12) Remove all the nuts. Install the wheel and tire assembly.
(13) Discard all removed studs.

# ADJUSTMENT

EN08Z0803H600001

## HAZARD ALERT MESSAGES

Read and observe all Warning and Caution hazard alert messages in this publication. They provide information that can help prevent serious personal injury, damage to components, or both.

**⚠ WARNING**

**To prevent serious eye injury, always wear safe eye protection when you perform vehicle maintenance or service.**

**1. CHECK AND ADJUST WHEEL BEARINGS**

The most accurate bearing end play measurement is obtained with the brake drum and tires removed.

- **If the brake drum and tires are installed and the bearing end play is greater than 0.003-inch (0.0762 mm):** Remove the brake drum and the tire-wheel assembly. Recheck bearing end play.

**⚠ WARNING**

**Park the vehicle on a level surface. Block the wheels to prevent the vehicle from moving. Support the vehicle with safety stands. Do not work under a vehicle supported only by jacks. Jacks can slip and fall over. Serious personal injury and damage to components can result.**

(1) Park the vehicle on a level surface. Block the wheels to prevent the vehicle from moving. Set the parking brake.
(2) Raise the vehicle so that the wheels are off the floor. Support the vehicle with safety stands.
(3) Remove the capscrews and remove the gasket and the cap from the hub.
(4) Verify that the brake drum and the hub fasteners are tightened to the manufacturer's specifications.
(5) Attach a dial indicator with the magnetic base at the bottom of the hub or the brake drum. Adjust the dial indicator so that the pointer is against the center of the knuckle. Set the dial indicator on ZERO.

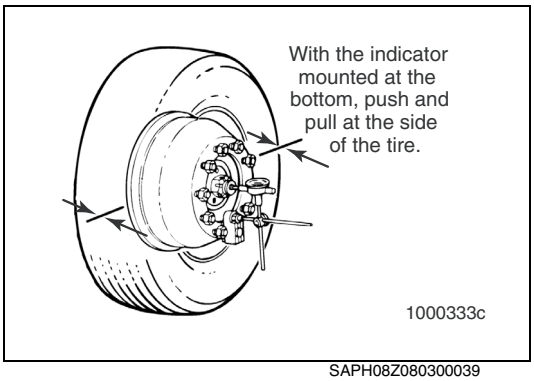


SAPH08Z080300039

**NOTICE**

**Do not push or pull at the top and bottom of the hub or drum, which can affect the end play measurement.**

(6) Measure the end play by pushing and pulling on each side of the hub or drum while looking at the dial indicator. The end play is the total travel observed.

- **If the end play is 0.001-0.005-inch (0.025-0.127 mm):** The bearings do not need adjustment.
- **If the end play is not 0.001-0.005-inch (0.025-0.127 mm):** Adjust the wheel bearings.

(7) **On double nut and lock fasteners:** Bend the lock washer off the wheel bearing nut. Remove the wheel bearing nut, the lock washer and the pierced lock ring.

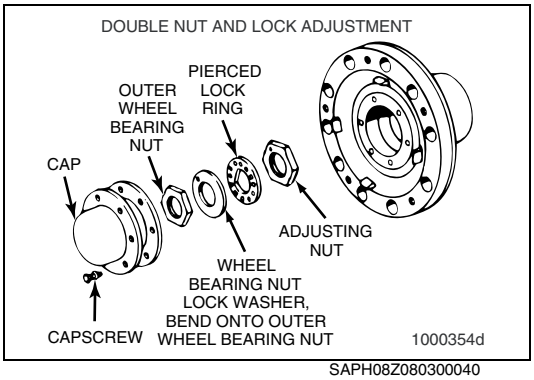


SAPH08Z080300040

**⚠ WARNING**

**Use a torque wrench to tighten or loosen adjusting nuts. Do not use a hammer to directly hit adjusting nuts, or to hit a chisel or drift placed against them. Damaged adjusting nuts can prevent you from obtaining correct wheel bearing end play, which can affect vehicle operation and cause the wheels to separate from the vehicle. Serious personal injury and damage to components will result.**

(8) Use a torque wrench to tighten the adjusting nut to 100 lb-ft (136 N·m) while rotating the tire in both directions.

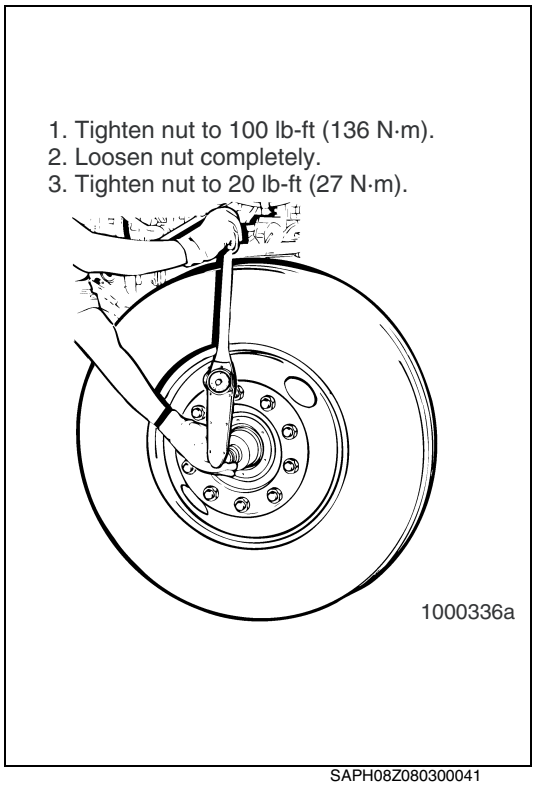


SAPH08Z080300041

(9) Loosen the nut completely. Tighten the nut to 20 lb-ft (27 N·m) while rotating the tire.

(10) Perform the following adjustment procedure.
   a. Back off the adjusting nut 1/3 turn.
   b. Install the pierced lock ring, the lock washer and the wheel bearing nut.
   c. For wheel bearing nuts in sizes from 1-1/8-inches up to 2-5/8-inches (2.86-6.67 cm), tighten to 200-300 lb-ft (271-407 N·m). For wheel bearing nuts 2-5/8-inches (6.67 cm) and more, tighten to 250-400 lb-ft (339-542 N·m)
   d. Measure the end play. The end play must be 0.001-0.005-inch (0.025-0.127 mm). Refer to Step (5) and Step (6). Readjust if necessary.
   e. If the end play is to specification, bend the washer to at least one flat edge of the outer wheel bearing nut.

(11) Install the gasket and the cap onto the hub. Install the capscrews and tighten to 20-30 lb-ft (27-41 N·m).

(12) Lower the vehicle to the ground. Check for correct vehicle operation.

# LUBRICATION AND MAINTENANCE

EN08Z0803H600002

TYPICAL OIL-LUBRICATED WHEEL BEARINGS

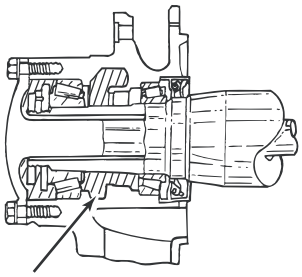

OIL RESERVOIR 402155a

SAPH08Z080300042

**1. OIL-LUBRICATED WHEEL BEARINGS, DRIVE AXLE HUBS WITHOUT FILL HOLES**

(1) Park the vehicle on a level surface. Place blocks under the wheels to prevent the vehicle from moving.

(2) Add the specified amount of lubricant through the carrier or housing bowl oil fill hole.

(3) Tilt the axle to the right and to the left to let the oil flow into the hub cavities. Keep the axle tilted for one minute in each position.

(4) With the axle in the level position, add the specified oil so that the level is even with the bottom of the fill plug hole.

(5) Install and tighten the fill plug.

## 2. LUBRICATION INTERVALS AND SPECIFICATIONS

### Wheel-End Axle Greasing Intervals and Specifications

| Greasing Interval | Grease | Meritor Specification | NLGI Grade | Grease Description | Typical Application | Outside Temperature |
|---|---|---|---|---|---|---|
| Whichever comes first:<br>Replacing Seals<br>Relining Brakes<br>On-Highway: 30,000 miles (48,000 km)<br>On/Off Highway and Off-Highway: Twice a year | Multi-Purpose Grease[1] | O-617-A, preferred, or O-617-B, acceptable | 1 or 2 | Lithium 12-Hydroxy Stearate or Lithium Complex | Wheel Bearings<br>Hubs<br>Spindle | Refer to the grease manufacturer's specifications for the temperature service limits. |

[1] Meritor recognizes that industry trends are moving toward increased selection and usage of synthetic grease in vehicle maintenance. However, some seals are known to expand when in contact with synthetic grease. Consult your local Meritor representative for synthetic grease application references before using any synthetic grease when performing wheel-end service and maintenance.

### Wheel-End Oil Change Intervals and Specifications

| Operation | On-Highway | Off-Highway |
|---|---|---|
| Check Oil Level | 1,000 miles (1,600 km) | 1,000 miles (1,600km) |
| Petroleum Oil Change | Whichever comes first. Seals replaced. Brakes relined. 100,000 miles (160,000 km). Once a year. | Whichever comes first. Seals replaced. Brakes relined. Once a year. |
| Synthetic Oil Change | Whichever comes first. Seals replaced. Brakes relined. 100,000 miles (160,000 km). Once a year. | Whichever comes first. Seals replaced. Brakes relined. Once a year. |

### Approved Lubricants

| Meritor Specifications | Military/SAE Specifications | Oil Description | Outside Temperature °F Min. | °F Max. | °C Min. | °C Max. |
|---|---|---|---|---|---|---|
| O-76-A Gear Oil | MIL-PRF-2105-E and SAEJ2360 | GL-5, SAE 85W/140 | –10 | None | –12 | None |
| O-76-D Gear Oil | | GL-5, SAE 80W/90 | –15 | None | –26 | None |
| O-76-E Gear Oil | | GL-5, SAE 75W/90 | –40 | None | –40 | None |
| O-76-J Gear Oil | | GL-5, SAE 75 | –40 | 35 | –40 | 2 |
| O-76-M Full-Synthetic Oil | | GL-5, SAE 75W/140 | –40 | None | –40 | None |
| O-76-N Full-Synthetic Oil | | GL-5, SAE 75W/90 | –40 | None | –40 | None |
| Heavy-Duty Engine Oil | MIL-L-2104 E or F | API-CD, -CE, -SG, -SH or -SJ SAE 40 or 50 [11] | –10 | None | –12 | None |
| Heavy-Duty Engine Oil | MIL-L-210 E or F | API-CD, -CE, -SG, -SH or -SJ SAE 30[22] | –15 | None | –26 | None |

[1] Current designations are acceptable. Multi-grade engine oils are acceptable if the SAE rating ends in 40 or 50.

[2] Current designations are acceptable. Multi-grade engine oils are acceptable if the SAE rating ends in 30.

SAPH08Z080300043

# WHEEL & TIRE

AX04-001

**WHEEL AND TIRE..... AX04-2**
DATA AND SPECIFICATIONS ..... AX04-2
TROUBLESHOOTING..... AX04-5
DESCRIPTION ..... AX04-7
SPECIAL TOOL..... AX04-8
PRECAUTIONS..... AX04-9
INSPECTION..... AX04-10
INSPECTION AND REPAIR ..... AX04-11

**WHEEL..... AX04-12**
OVERHAUL ..... AX04-12

# WHEEL AND TIRE

## DATA AND SPECIFICATIONS

EN08Z0804I200001

| TIRE SIZE DESIGNATION D: DUAL S: SINGLE | | TIRE LOAD LIMITS (LBS.) AT VARIOUS COLD TIRE INFLATION PRESSURES (PSI) (The pressure is minimum for the load) | | | | | | | | | | |
|---|---|---|---|---|---|---|---|---|---|---|---|---|
| | | 70 | 75 | 80 | 85 | 90 | 95 | 100 | 105 | 110 | 115 | 120 |
| 245/70R19.5 | D | | | 3,415 | 3,515 | 3,655 | *3,860(F) | 3,940 | 4,075 | *4,300(G) | 4,345 | *4,540(H) |
| | S | | | 3,640 | 3,740 | 3,890 | *4,080(F) | 4,190 | 4,335 | *4,540(G) | 4,620 | *4,805(H) |
| 255/70R22.5 | D | | | 3,970 | 4,110 | 4,275 | 4,410 | 4,455 | 4,610 | *4,675(G) | 4,915 | *5,070(H) |
| | S | | | 4,190 | 4,370 | 4,550 | 4,675 | 4,895 | 5,065 | *5,205(G) | 5,400 | *5,510(H) |
| 295/75R22.5 | D | 4,095 | 4,300 | 4,540 | 4,690 | 4,885 | *5,070(F) | 5,260 | 5,440 | *5,675(G) | 5,795 | *6,005(H) |
| | S | 4,500 | 4,725 | 4,940 | 5,155 | 5,370 | *5,510(F) | 5,780 | 5,980 | *6,175(G) | 6,370 | *6,610(H) 7,160(H) |
| 10R22.5 | D | 3,860 | 4,045 | 4,230 | *4,410(E) | 4,585 | 4,760 | *4,940(F) | 5,075 | 5,210 | *5,355(G) | |
| | S | 4,080 | 4,280 | 4,480 | *4,675(E) | 4,850 | 5,025 | *5,205(F) | 5,360 | 5,515 | *5,675(G) | |
| 11R22.5 | D | 4,380 | 4,580 | 4,760 | 4,950 | *5,205(F) | 5,415 | 5,625 | *5,840(G) | 5,895 | 5,950 | *6,005(H) |
| | S | 4,530 | 4,770 | 4,990 | 5,220 | *5,510(F) | 5,730 | 5,950 | *6,175(G) | 6,320 | 6,465 | *6,610(H) |

**NOTICE**
**Attached *mark show maximum recommended load (LBS.)**
**Load range letters and corresponding PLY ratings**
**(E= 10 PLY, F= 12 PLY, G= 14 PLY, H= 16 PLY)**
**Tires for vehicles in highway service**
**Tire load limits at various cold tire inflation pressures**

## SPEED LIMIT DATA LIST

- Speed limit must not exceed the following table.
- Be sure to carry out the adjustment of engine's speed limit data by HINO DX II when you change the tire size or rear axle gear ratio.

**⚠ WARNING**
**The maximum speed limit of the speed limiter depends upon the tire size and rear axle gear ratio.**
**NEVER set the "speed limit" in excess of the speed set forth on the table below for the corresponding tire size and rear axle gear ratio.**
**ALWAYS adjust the engine's speed limit data by using the HINO DX II whenever the tire size or the rear axle gear ratio is changed.**

**Apply to allison auto transmission series**

| MODEL | AUTO TRANSMISSION MODEL | REAR AXLE SERIES | REAR AXLE GEAR RATIO | TIRE SIZE | TIRE RADIUS (m) | SPEED LIMIT (km/h) | REFERENCE; SPEED LIMIT (mile/h) |
|---|---|---|---|---|---|---|---|
| NE | 2200HS 2200RDS 2500HS 2500RDS | RS17 RS19 | 4.11 | 245/70R19.5 | 0.407 | 135 | 84 |
| | | | 4.88 | 245/70R19.5 | 0.407 | 114 | 70 |
| | | | 5.13 | 10R22.5 | 0.492 | 131 | 81 |
| | | | | 11R22.5 | 0.508 | 135 | 84 |
| | | | | 245/70R19.5 | 0.407 | 108 | 67 |
| | | | | 255/70R22.5 | 0.453 | 120 | 74 |
| | | | | 295/75R22.5 | 0.493 | 131 | 81 |
| NF | 2500HS 2500RDS | RS21 | 5.29 | 11R22.5 | 0.508 | 131 | 81 |
| | | | | 295/75R22.5 | 0.493 | 127 | 79 |
| | | | 5.57 | 11R22.5 | 0.508 | 124 | 77 |
| | | | | 295/75R22.5 | 0.493 | 121 | 75 |
| NJ | 2200HS 2200RDS 2500HS 2500RDS | RS17 RS19 | 5.13 | 11R22.5 | 0.508 | 135 | 84 |
| | | | | 245/70R19.5 | 0.407 | 108 | 67 |
| | | | | 255/70R22.5 | 0.453 | 121 | 75 |
| | | | | 295/75R22.5 | 0.493 | 131 | 81 |
| | | | 5.29 | 11R22.5 | 0.508 | 131 | 81 |
| | | | | 255/70R22.5 | 0.453 | 117 | 72 |
| | | | | 295/75R22.5 | 0.493 | 127 | 79 |
| | | | 5.57 | 11R22.5 | 0.508 | 124 | 77 |
| | | | | 255/70R22.5 | 0.453 | 111 | 69 |
| | | | | 295/75R22.5 | 0.493 | 121 | 75 |
| NV | 2500HS 2500RDS | RS21 RS23 | 4.88 | 11R22.5 | 0.508 | 142 | 88 |
| | | | | 295/75R22.5 | 0.493 | 138 | 86 |
| | | | 5.29 | 11R22.5 | 0.508 | 131 | 81 |
| | | | | 295/75R22.5 | 0.493 | 127 | 79 |
| | | | 5.38 | 11R22.5 | 0.508 | 129 | 80 |
| | | | 5.57 | 11R22.5 | 0.508 | 124 | 77 |
| | | | | 295/75R22.5 | 0.493 | 121 | 75 |
| | | | 5.63 | 11R22.5 | 0.508 | 123 | 76 |
| | | | 5.86 | 11R22.5 | 0.508 | 118 | 73 |
| | | | | 295/75R22.5 | 0.493 | 115 | 71 |
| | | | 6.14 | 11R22.5 | 0.508 | 113 | 70 |
| | | | | 295/75R22.5 | 0.493 | 110 | 68 |

| MODEL | AUTO TRANSMISSION MODEL | REAR AXLE SERIES | REAR AXLE GEAR RATIO | TIRE SIZE | TIRE RADIUS (m) | SPEED LIMIT (km/h) | REFERENCE; SPEED LIMIT (mile/h) |
|---|---|---|---|---|---|---|---|
| NV | 3000RDS 3500RDS | RS21 RS23 | 4.88 | 11R22.5 | 0.508 | 136 | 84 |
| | | | | 295/75R22.5 | 0.493 | 132 | 82 |
| | | | 5.29 | 11R22.5 | 0.508 | 126 | 78 |
| | | | | 295/75R22.5 | 0.493 | 122 | 76 |
| | | | 5.38 | 11R22.5 | 0.508 | 124 | 77 |
| | | | 5.57 | 11R22.5 | 0.508 | 120 | 74 |
| | | | | 295/75R22.5 | 0.493 | 116 | 72 |
| | | | 5.63 | 11R22.5 | 0.508 | 118 | 73 |
| | | | 5.86 | 11R22.5 | 0.508 | 114 | 70 |
| | | | | 295/75R22.5 | 0.493 | 110 | 68 |
| | | | 6.14 | 11R22.5 | 0.508 | 108 | 67 |
| | | | | 295/75R22.5 | 0.493 | 105 | 65 |
| NH | 3000RDS 3500RDS | RS23 | 5.38 | 11R22.5 | 0.508 | 124 | 77 |
| | | | | 295/75R22.5 | 0.493 | 120 | 74 |
| | | | 5.63 | 11R22.5 | 0.508 | 114 | 70 |
| | | | | 295/75R22.5 | 0.493 | 118 | 73 |
| | | | 6.14 | 11R22.5 | 0.508 | 108 | 67 |
| | | | | 295/75R22.5 | 0.493 | 105 | 65 |

# TROUBLESHOOTING

EN11Z0802F300001

| Symptom | Possible cause | Action |
|---|---|---|
| **Excessive wear on edges of tread** | Under inflated tires | Properly inflate with the recommended pressure. |
| | Vehicle overloading | Correct as required by Factory spec. |
| | High speed cornering | Correct as required by Factory spec. |
| | Incorrect wheel alignment | Set to the correct specifications. |
| **Tires show excessive wear in center of tread** | Tires overinflated | Properly inflate with the recommended pressure. |
| **Excessive tire wear** | Improper tire pressure | Properly inflate with the recommended pressure. |
| | Incorrect tire wheel usage | Install the correct tire wheel combination. |
| | Bent wheel | Repair or replace. |
| | Front end out of alignment | Align front end. |
| | Loose, worn or damaged steering linkage, joints, suspension components, bushing or ball joints | Inspect, repair or replace as required |
| **Wheel hopping (vehicle vibration and rough steering)(Disc wheels)** | Rocks or debris wedged between dual disc wheels | Remove the rocks and the debris. |
| | Out-of-balance tire and/or hub and drum | Determine the out-of-balance component and balance or replace. |
| **Wheel hopping (vehicle vibration and rough steering) (Vehicle)** | Loose or worn drive line or suspension | Identify the location of vibration carefully. Then repair or replace the loose or worn parts. (Refer to PROPELLER SHAFT for vehicle vibration.) |
| **Wobbling (vehicle vibration and rough steering) (Disc wheels)** | Bent or distorted due to the overloading or improper handling | Replace the wheel. |
| | Loose mountings, damaged studs, wheel nuts, enlarged stud holes, worn or broken hub face, or foreign material on mounting surfaces | Replace worn or damaged parts. Clean mounting surfaces. |
| **Wobbling (vehicle vibration and rough steering) (Vehicle)** | Improper alignment | Have vehicle aligned. |
| | Loose, worn or broken suspension parts | Repair or replace. |
| **Cracked or broken wheel discs (cracks develop in the wheel disc from hand hole to hand hole, from hand hole to rim, or from hand hole to stud hole.)** | Metal fatigue resulting from overloading | Replace wheel. |

| Symptom | Possible cause | Action |
|---|---|---|
| **Damaged wheel bolt holes (wheel bolt holes become worn, elongated or deformed, metal builds up around wheel bolt hole edges, cracks develop from wheel bolt hole to wheel bolt hole.)** | Loose wheel mounting | • Replace wheel and check the installation of correct wheel bolt and nuts.<br>• Check the cracked or broken wheel bolt-replace.<br>• Check the worn hub face-replace.<br>• Check the broken or cracked hub replace.<br>• Clean mounting surfaces (Re-torque the wheel nuts periodically.)<br>• Rust streaks fanning out from wheel bolts holes: indicates that the wheel nuts are or have been loose. |
| **Tire slippage on rim (Disc wheels)** | Improper storage or operating conditions | Correct as required. |
| | Poor maintenance | Follow the proper maintenance procedures. |
| | Rust, corrosion or bead seating | Correct as required. |
| | Loss of pressure | Follow the proper maintenance procedures. |
| **Tire mounting difficulties (Wheel rims)** | Mismatched tire and rim sizes | Correct as required. |
| | Defective or mismatched rings for the rim | Correct as required. |
| | Tires overinflated | Properly inflate with the recommended pressure. |
| | Corrosion and dirt | Correct as required. |
| **Loose inner wheel** | Excessive wheel bolt standout from the mounting face of hub allowing the wheel nut to bottom out | Replace with the proper length wheel bolt. |
| | Improper torque | Follow the recommended torque procedure. |
| | Wrong inner nut | Use correct inner nuts. |
| **Broken wheel bolts** | Loose wheel nuts | Replace the wheel bolt and follow the proper torque procedures. |
| | Overloading | Replace the wheel bolt. |
| **Stripped threads** | Excessive clamp load | Replace wheel bolt and follow the proper torque procedures. |
| **Rust streaks from wheel bolt holes** | Loose wheel nuts | Check complete assembly, replace damaged parts and follow the proper torque procedures. |
| **Damaged inner or outer wheel nuts** | Loose wheel assembly | Replace wheel nuts. Check the proper torque procedures. |
| **Frozen inner or outer wheel nuts** | Corrosion or damage | Replace wheel nuts and wheel bolts. |

# DESCRIPTION

EN08Z0804C100001

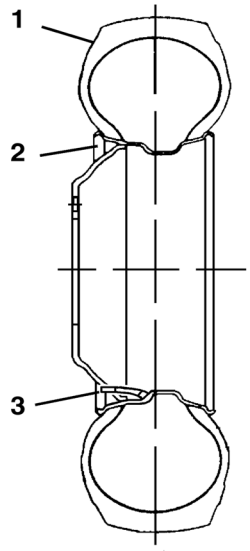


Tubeless

SAPH08Z080400001

**WHEEL AND TIRE**

| | | | |
|---|---|---|---|
| 1 | Tire | 3 | Valve |
| 2 | Disc wheel | | |

# SPECIAL TOOL

EN08Z0804K100001

Prior to starting a wheel and tire overhaul, it is necessary to have these special tools.

| Illustration | Part number | Tool name | Remarks |
|---|---|---|---|
| 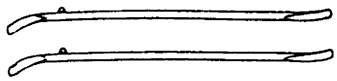 | S0960-91210 | LEVER | |
| 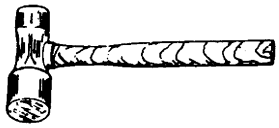 | S0960-91220 | RUBBER HAMMER | |

# PRECAUTIONS

EN08Z0804C100002

**⚠ WARNING**
**Failure to comply with the following procedures may result in faulty positioning of the tire and/or rim parts, and can cause the assembly to burst with an explosive force sufficient to cause death or serious personal injury.**

**1. DEFLATION AND DISASSEMBLY**
(1) Always check the tire/rim assembly for the proper components seating prior to the removal from the vehicle.
(2) Always deflate the tire by removing the valve core prior to removing the wheel from vehicle or disassembling of the components.
(3) Never position your body in front of the rim during deflation.
(4) Always follow the assembly and disassembly procedures outlined in this instruction manual and obtain safety literature from the Authorities.
(5) Never use a steel hammer to assemble or disassemble the rim components. Use a lead, brass, or plastic type mallet.

**2. RIM INSPECTION**
(1) Always select the proper tire size and construction to match the rim or wheel rating and size.
(2) Never use damaged, worn, or corroded rims, wheels, or mounting hardware.
(3) Always clean and repaint lightly rusted rims.
(4) Never use a rim or wheel component you cannot identify.

**3. ASSEMBLY AND TIRE INFLATION**
(1) Always inflate the tire in a safety cage or use a portable lock ring guard. Use a clip-on type air chuck with a remote valve so that you can stand clear during the tire inflation.
(2) Never re-inflate or add tire inflation pressure to a tire that has been run flat or seriously under inflated without removing and checking for rim damage.
(3) Tire pressure should be checked while cold. Do not bleed air from tires while hot. This will result in an under inflated condition. Under inflated tires build up excessive heat due to overdeflection that may result in sudden tire deterioration, causing severe handling problems.
(4) Never hammer on the components of an inflated or partially inflated assembly.

# INSPECTION

EN08Z0804H300001

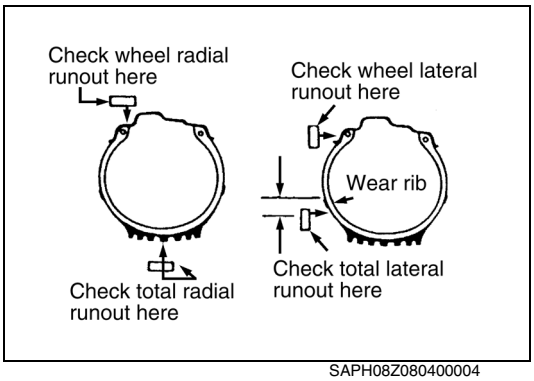


SAPH08Z080400004

## 1. GENERAL INSPECTION

(1) Check the tire tread wear (groove depth) and tire damage. If the slip sign on the tire tread comes out, replace the tire.
**Groove depth (Remaining groove)**
**General running: 1.6 mm {0.063 in.}**

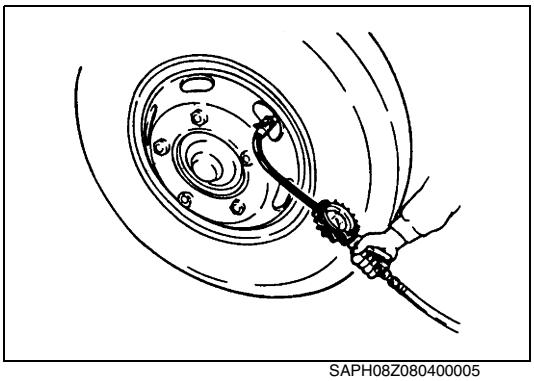

SAPH08Z080400005

(2) Check the air pressure.
If improper, inflate the tire to the proper pressure as previously described in this chapter.

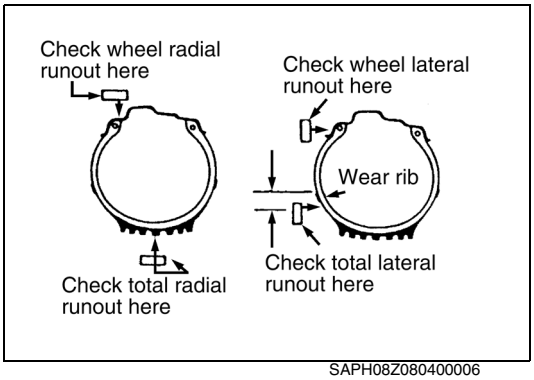


SAPH08Z080400006

## 2. CHECK RUNOUT IN THE TIRE AND WHEEL RIM.

**NOTICE**
**Eliminate any flat spots in the tire by driving the vehicle a little.**

(1) Jack up the vehicle and the check the runout in the tire and wheel rim.

**Unit: mm {in.}**

| | Tire | Wheel rim |
|---|---|---|
| **Lateral runout** | **Less than 2.5 {0.098}** | **Less than 1.8 {0.071}** |
| **Radial runout** | **Less than 2.5 {0.098}** | **Less than 1.8 {0.071}** |

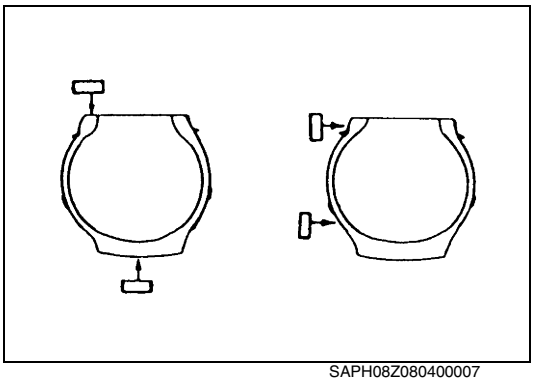

SAPH08Z080400007

(2) If the wheel rim does not conform to the runout limits, try re-mounting the wheel in a different position.
(3) If the wheel rim is still not within 1.8 mm {0.072 in.} of runout, then replace it with a new rim.
(4) If the tire does not conform to runout standards, reinstall it in a different position on the rim.

## 3. WHEEL AND TIRE BALANCING.

(1) Driving with a rim or tire that is unbalanced may cause the vehicle and steering wheel to shimmy, and will produce an abnormal tire wear.
In this situation, we recommend that you should balance the wheels.

- Static balancing
  This is relatively effective when operating at low speeds; however, if operating at high speeds, dynamic balancing is recommended.
- Dynamic balancing
  Please balance the wheels, using a balancing machine.

# INSPECTION AND REPAIR

EN08Z0804H300002

**Unit: mm {in.}**

| Inspection item | Standard | Limit | Remedy | Inspection procedure |
|---|---|---|---|---|
| **Tire:<br>Damage, foreign matter, etc.** | **—** | **—** | **Replace, if necessary.** | **Visual check**<br> 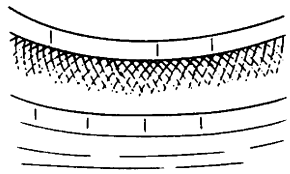 |
| **Tubeless tire:<br>Damage** | **—** | **—** | **Replace, if necessary.** | **Visual check**<br> 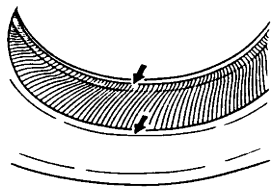 |
| **Wheel (Tubeless tire):<br>Cracks and deformation** | **—** | **—** | **Replace, if necessary.** | **Visual check**<br> 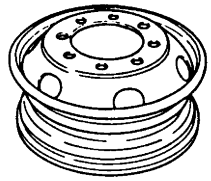 |
| **Rim (Tubeless tire):<br>Damage** | **—** | **—** | **Replace, if necessary.** | **Visual check**<br>  |
| **Pipe, nut and O-ring of the valve (tubeless tire):<br>Damage** | **—** | **—** | **Replace, if necessary.** | **Visual check**<br> 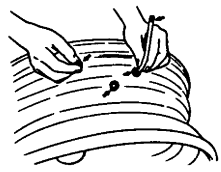 |

# WHEEL

## OVERHAUL

EN08Z0804H200001

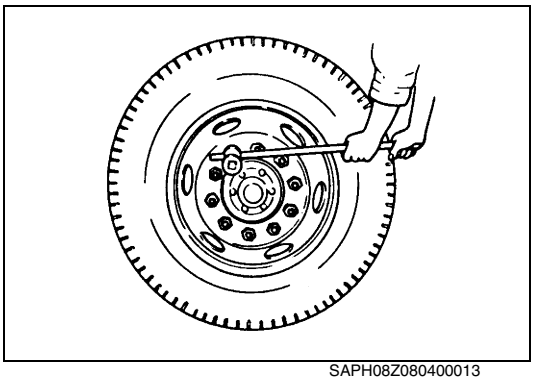
SAPH08Z080400013

### IMPORTANT POINT– REMOVAL

**1. REMOVE THE WHEEL AND TIRE.**
(1) Loosen the wheel nuts, but do not remove them.
(2) Raise the vehicle until the tire clears the floor.
(3) Remove the wheel nuts and tire from the hub and drum.
On dual tires, the inner wheel nuts will also have to be removed for the inner tire to be removed.

| Wheel position | Direction of wheel nut threads |
|---|---|
| Both side vehicle | Right-hand threads |

**NOTICE**
- **Be sure to apply the wheel stoppers in the front or rear tires.**

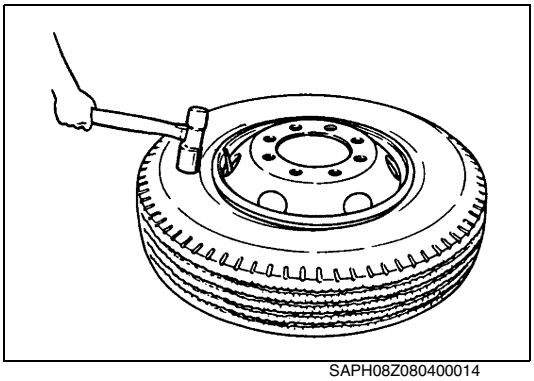
SAPH08Z080400014

### IMPORTANT POINT - DISASSEMBLY

**1. DISASSEMBLE THE WHEEL AND TIRE (TUBELESS).**
(1) Make certain the tire is completely deflated with the valve core removed.
(2) With the tire lying flat, loosen both beads with the special tool or by standing on the tire with your heels close to the rim.
**SST: Rubber hammer (S0960-91220)**

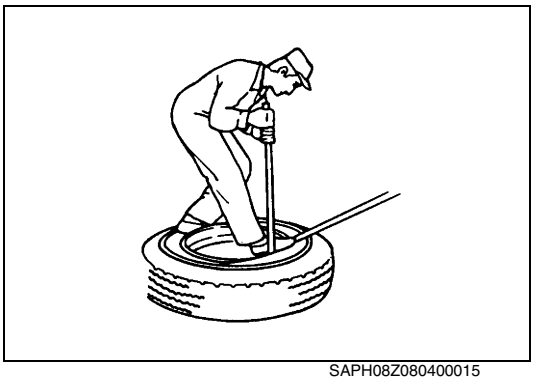
SAPH08Z080400015

(3) With the wide side of the rim down, lubricate the top bead.
(4) With the stops toward the rim, insert the spoon ends of the special tools about 250 mm {10 in.} apart. Holding the bead in the well with one foot, pull one tool towards the center of the rim.
**SST: Lever (S0960-91210)**

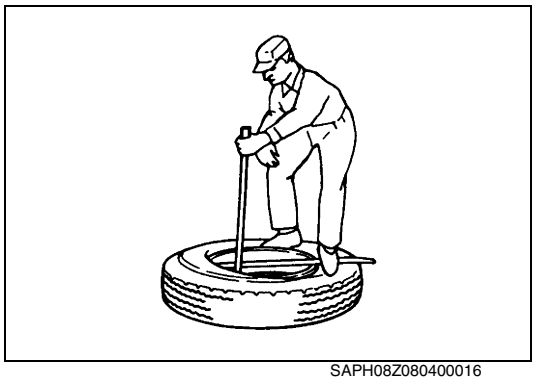
SAPH08Z080400016

(5) Hold the tool in position with one foot and pull the second tool toward the center of the rim. Progressively work the bead off the rim, taking additional bites with the tools as necessary.


SAPH08Z080400017

(6) Stand the assembly in a vertical position.
Lubricate the second bead.
(7) At the top of the assembly, insert the straight end of the tool between the bead and back the flange of the rim at about 45 degrees angle.
Turn the tool so that it is perpendicular to the rim. Pry the second bead off.


SAPH08Z080400018

## IMPORTANT POINTS – ASSEMBLY

**1. ASSEMBLY OF WHEEL AND TIRE (TUBELESS).**
(1) Be sure that the right valve is used and is properly installed in the rim.

| Tire size designation | Valve nut tightening torque<br>N·m {kgf·cm, lbf·in} |
|---|---|
| **245/70R19.5** | **4.5-6.2 {46-63, 40-55}: 19.5 x 6.75 wheel<br>9.0-14.1 {92-143, 80-125}: 19.5 x 7.50 wheel** |
| **255/70R22.5<br>295/75R22.5<br>10R22.5<br>11R22.5** | **4.5-6.2 {46-63, 40-55}** |

(2) Inspect the rim to ensure that the bead seats are clean and smooth.
(3) Place the rim on the floor with the wide side down and lubricate the first bead of the tire and upper bead seat of the rim.

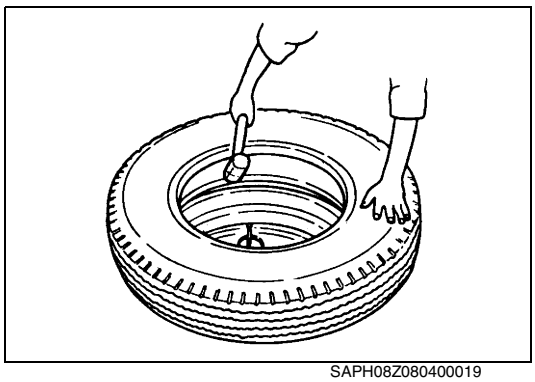
SAPH08Z080400019

(4) Push the first bead into the well of the rim and onto the rim as far as possible.
With the special tool, hammer the first bead so that the bead gets over the rim flange.
**SST: Rubber hammer (S0960-91220)**

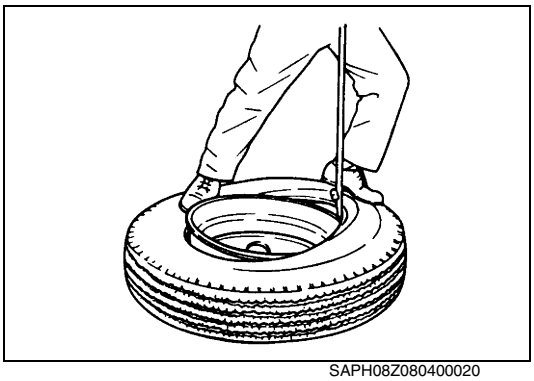
SAPH08Z080400020

(5) Insert the lever between the rim flange and the tire bead and then raise the lever so that the bead gets over the rim flange.
**SST: Lever (S0960-91210)**

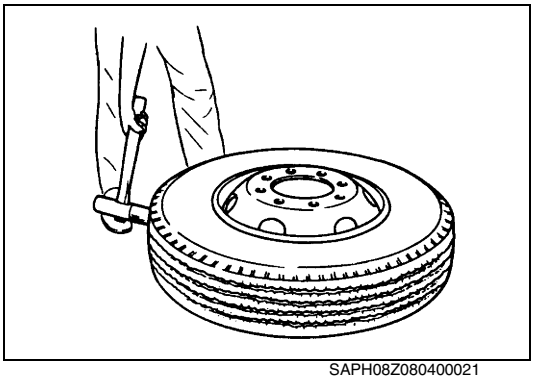
SAPH08Z080400021

(6) With the special tool, hammer the tire tread so that the bead and the rim will be seated.
**SST: Rubber hammer (S0960-91220)**

(7) Inflate the tire as described in this chapter, making certain that all the safety precautions are followed. Check for leakage.

## IMPORTANT POINT – INSTALLATION

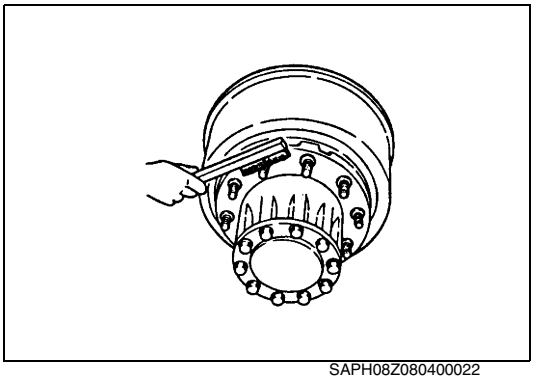
SAPH08Z080400022

**1. INSTALL THE WHEEL AND TIRE.**
(1) Be sure to check all parts and replace any parts that are overly worn or damaged. Clean and remove any foreign matter from wheel bolts, wheel nuts and wheel side is contacting with the brake drum.

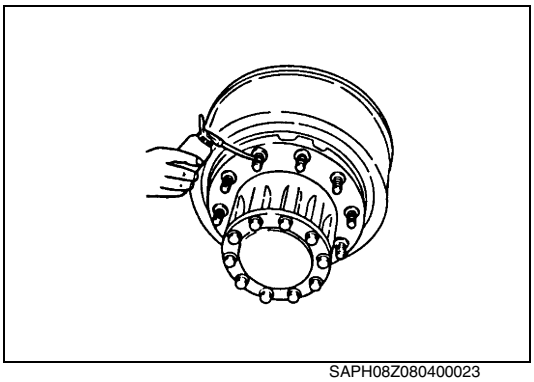
SAPH08Z080400023

(2) Apply lubricant (engine oil or grease) to the thread part of the wheel bolts and wheel nuts.

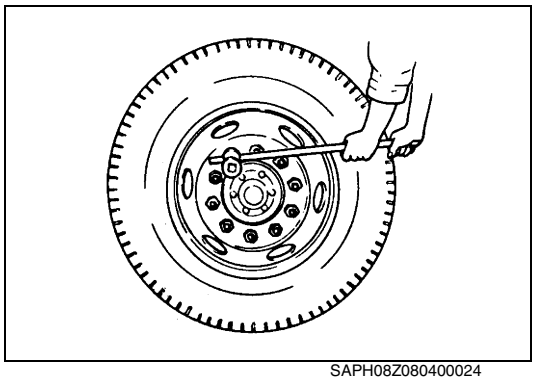

SAPH08Z080400024

(3) Rotate the wheel if necessary and check to see that the wheel bolts are in the center of the wheel's wheel bolt holes, then tighten the wheel nuts lightly.

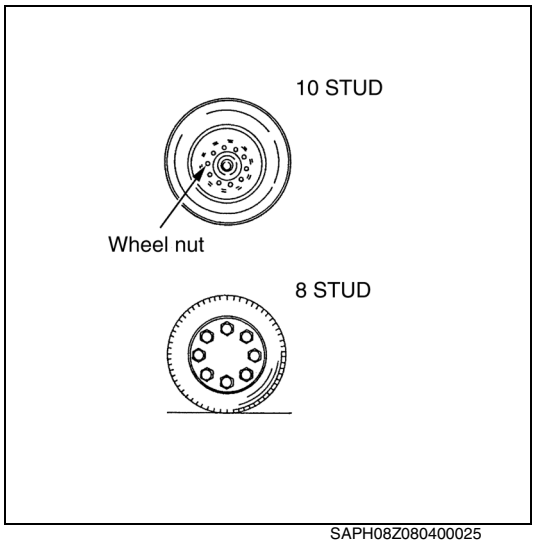


SAPH08Z080400025

(4) Using a wheel nut wrench, tighten the wheel nuts in accordance with specified torque using diagonal method.

| MODEL | WHEEL BOLT (Diameter x Thread Pitch) | Tightening torque N·m {kgf·cm, lbf·ft} |
|---|---|---|
| NE8J | ISO 8 STUDS (M22 x 1.5) | 610-680 {6,200-6,900, 450-500} |
| NE8J, NF8J, NJ8J, NV8J, NH8J | ISO 10 STUDS (M22 x 1.5) | 610-680 {6,200-6,900, 450-500} |

**NOTICE**
**Tighten the wheel nuts with several repetitions in the tightening order so as to reach the proper torque evenly and gradually.**

**⚠ WARNING**
**The specified torque refers to torque tightening of wheel nuts. Incorrect tightening can cause the wheel to come off while driving. This can result in death, personal injury and/or property damage due to the loss of vehicle control.**
**When the vehicle, wheels, or wheel nuts are new, the wheel nuts should be checked and tightened with specified torque at 100, 500 and 1,000 miles to confirm they are not loosen and correctly tightened. The tightening torque should be checked with the proper torque wrench.**

**2. THE FOLLOWING ORDER AND INSTRUCTIONS ARE NECESSARY FOR INSTALLING DUAL TIRES.**

(1) Installation procedures for the inner wheel nuts are the same as in 1. through 4. above.

(2) Installation procedures for the outer wheel nuts are the same as above.

(3) When only the outer wheel is replaced, first tighten all the inner wheel nuts to the specified torque. Then mount the outer wheel and tighten all the outer wheel nuts to the specified torque.

**NOTICE**

- **Install the dual rear wheels with their valve stems positioned at 180 degrees apart to facilitate tire inflation.**
- **Tighten all the inner nuts and outer nuts according to the above-mentioned procedures.**

**3. WHEEL AND TIRE BALANCING**

(1) Driving with a rim or tire that is unbalanced may cause the vehicle and steering wheel to shimmy, and will produce an abnormal tire wear.
In this situation, we recommend that you should balance the wheels.

- Static balancing
  This is relatively effective when operating at low speeds; however, if operating at high speeds, dynamic balancing is recommended.
- Dynamic balancing
  Please balance the wheels, using a balancing machine.

# SUSPENSION

SU02-001

**LEAF SUSPENSION ASSEMBLY ..... SU02-2**
DATA AND SPECIFICATIONS ..... SU02-2
DESCRIPTION ..... SU02-4
TROUBLESHOOTING ..... SU02-6
COMPONENT LOCATOR ..... SU02-7
OVERHAUL ..... SU02-11
INSPECTION AND REPAIR ..... SU02-16

**AIR SUSPENSION ASSEMBLY ..... SU02-19**
DATA AND SPECIFICATIONS ..... SU02-19
SYSTEM DIAGRAM
FOR HEIGHT CONTROL ..... SU02-20
DESCRIPTION ..... SU02-21
TROUBLESHOOTING ..... SU02-22
COMPONENT LOCATOR ..... SU02-23
OVERHAUL ..... SU02-25
INSPECTION AND REPAIR ..... SU02-29

# LEAF SUSPENSION ASSEMBLY

## DATA AND SPECIFICATIONS

EN09Z1002I200001

**FRONT SUSPENSION** **Unit: mm {in.}**

| Model | | HINO 238 (NE8J)<br>HINO 258 (NE8J, NJ8J)<br>HINO 268 (NE8J, NJ8J) | HINO 238 (NE8J)<br>HINO 258 (NE8J, NJ8J)<br>HINO 268 (NE8J, NJ8J)<br>HINO 338 (NF8J, NV8J)<br>HINO 358 (NH8J) | HINO 338 (NV8J)<br>HINO 358 (NH8J) |
|---|---|---|---|---|
| Type | | Taper-leaf spring with double acting shock absorber | | |
| Dimensions of main leaf springs: | Span | 1,470 {57.88} | 1,470 {57.88} | 1,470 {57.88} |
| | Width | 76.20 {3.00} | 76.20 {3.00} | 76.20 {3.00} |
| | Thickness of leaves | 20.01 {0.79} x2 | 20.01 {0.79} x3 | 20.62 {0.812} x4 |
| Shock absorbers | Type | Double acting | Double acting | Double acting |
| | Stroke | 255 {10.04} | 255 {10.04} | 255 {10.04} |
| | Min. length | 390 {15.35} | 390 {15.35} | 390 {15.35} |
| | Max. length | 645 {25.40} | 645 {25.40} | 645 {25.40} |

**REAR SUSPENSION** **Unit: mm {in.}**

| Model | | HINO 238 (NE8J)<br>HINO 258 (NE8J, NJ8J)<br>HINO 268 (NE8J, NJ8J)<br>HINO 338 (NV8J) | HINO 338 (NF8J, NV8J) | HINO 338 (NV8J)<br>HINO 358 (NH8J) | HINO 268 (NV8J)<br>HINO 358 (NH8J, NV8J) |
|---|---|---|---|---|---|
| Type | | Semi-elliptic leaf spring or semi-elliptic main and auxiliary helper-leaf spring (If so equipped) | | | |
| Dimensions of main leaf springs | Span | 1,300 {51.18} | 1,300 {51.18} | 1,300 {51.18} | 1,300 {51.18} |
| | Width | 76.20 {3.00} | 76.20 {3.00} | 76.20 {3.00} | 76.20 {3.00} |
| | Thickness of leaves | 14.17 {0.56} | 14.99 {0.59} | 15.88 {0.63} | 15.88 {0.63} |
| | | 13.40 {0.53} | — | — | — |
| | | 10.20 {0.40} | 10.20 {0.40} | 10.20 {0.40} | 10.20 {0.40} |
| Dimensions of auxiliary leaf springs (If so equipped) | Span | 900 {35.44} | 900 {35.44} | 900 {35.44} | — |
| | Width | 76.20 {3.00} | 76.20 {3.00} | 76.20 {3.00} | — |
| | Thickness | 17.83 {0.70} | 17.83 {0.70} | 17.83 {0.70} | — |
| Shock absorbers (If so equipped) | Type | Double acting | Double acting | Double acting | Double acting |
| | Stroke | 242 {9.53} | 242 {9.53} | 242 {9.53} | 242 {9.53} |
| | Min. length | 432 {17.01} | 432 {17.01} | 432 {17.01} | 432 {17.01} |
| | Max. length | 674 {26.53} | 674 {26.53} | 674 {26.53} | 674 {26.53} |

| Model | | HINO 238 (NE8J)<br>HINO 258 (NE8J, NJ8J)<br>HINO 268 (NE8J, NJ8J)<br>HINO 338 (NV8J) | HINO 338 (NF8J, NV8J) | HINO 338 (NV8J)<br>HINO 358 (NH8J) | HINO 268 (NV8J)<br>HINO 358 (NH8J, NV8J) |
|---|---|---|---|---|---|
| Stabilizer (If so equipped) | Type | Torsion bar | Torsion bar | Torsion bar | Torsion bar |
| | Diameter | 48 {1.89} | 48 {1.89} | 48 {1.89} | 48 {1.89} |
| | Length | 550 {21.65} | 550 {21.65} | 550 {21.65} | 550 {21.65} |
| Helper rubber | | Less | Less | Less | With |

# DESCRIPTION

EN09Z1002C100001

## FRONT SUSPENSION

(Representative type)

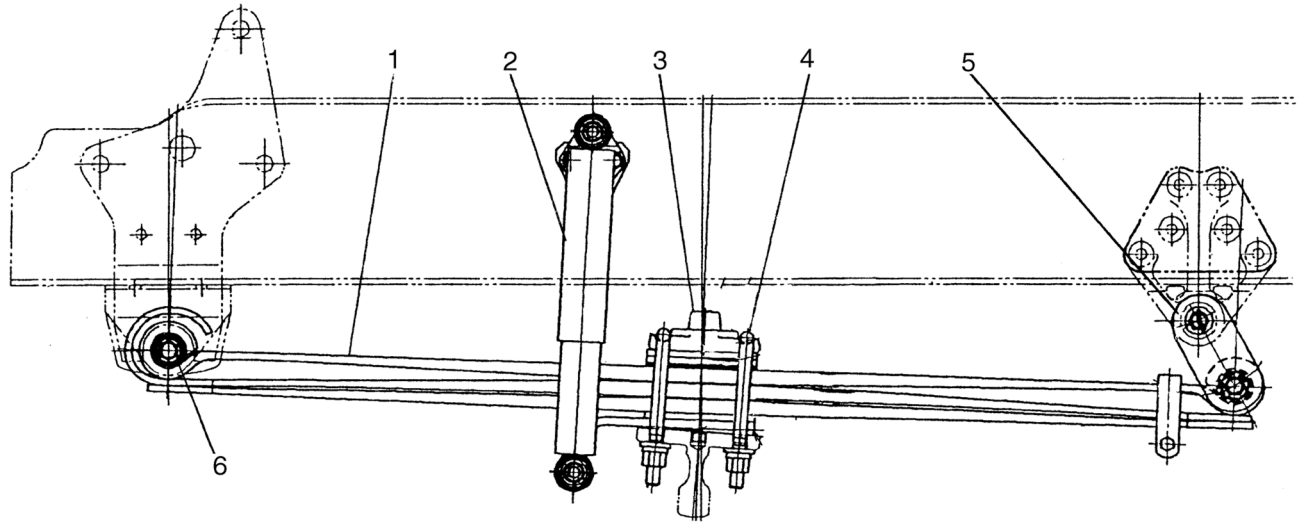


SAPH09Z100200001

| | | | |
|---|---|---|---|
| 1 | Leaf spring assembly | 4 | U-bolt |
| 2 | Shock absorber | 5 | Shackle |
| 3 | Spring bumper | 6 | Spring pin |

## REAR SUSPENSION

(Representative type)

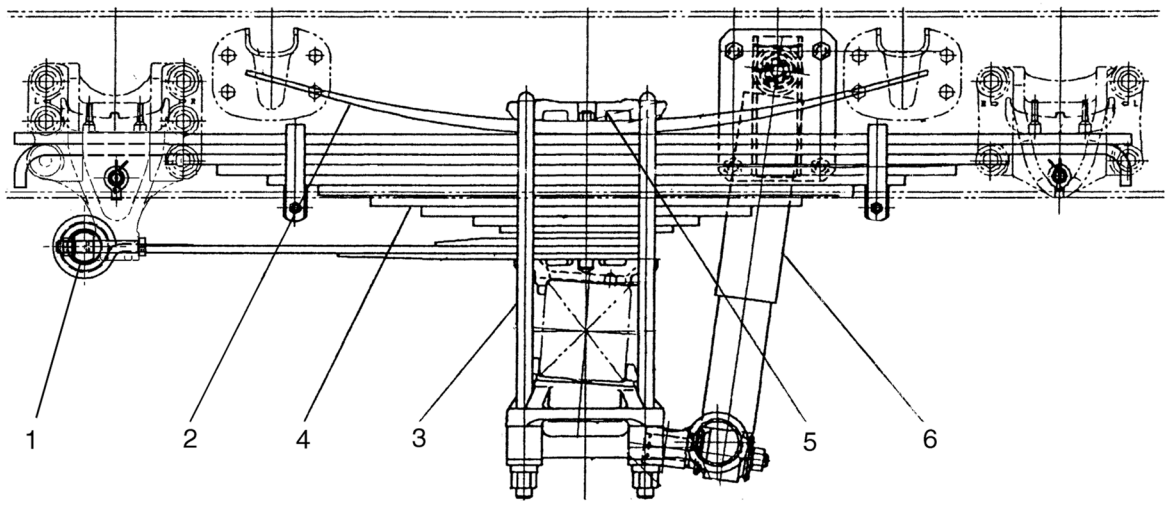


SAPH09Z100200002

| | | | |
|---|---|---|---|
| 1 | Spring pin | 4 | Main leaf spring assembly |
| 2 | Auxiliary leaf spring (If so equipped) | 5 | Spring pad |
| 3 | U-bolt | 6 | Shock absorber (If so equipped) |

## REAR SUSPENSION (STABILIZER)

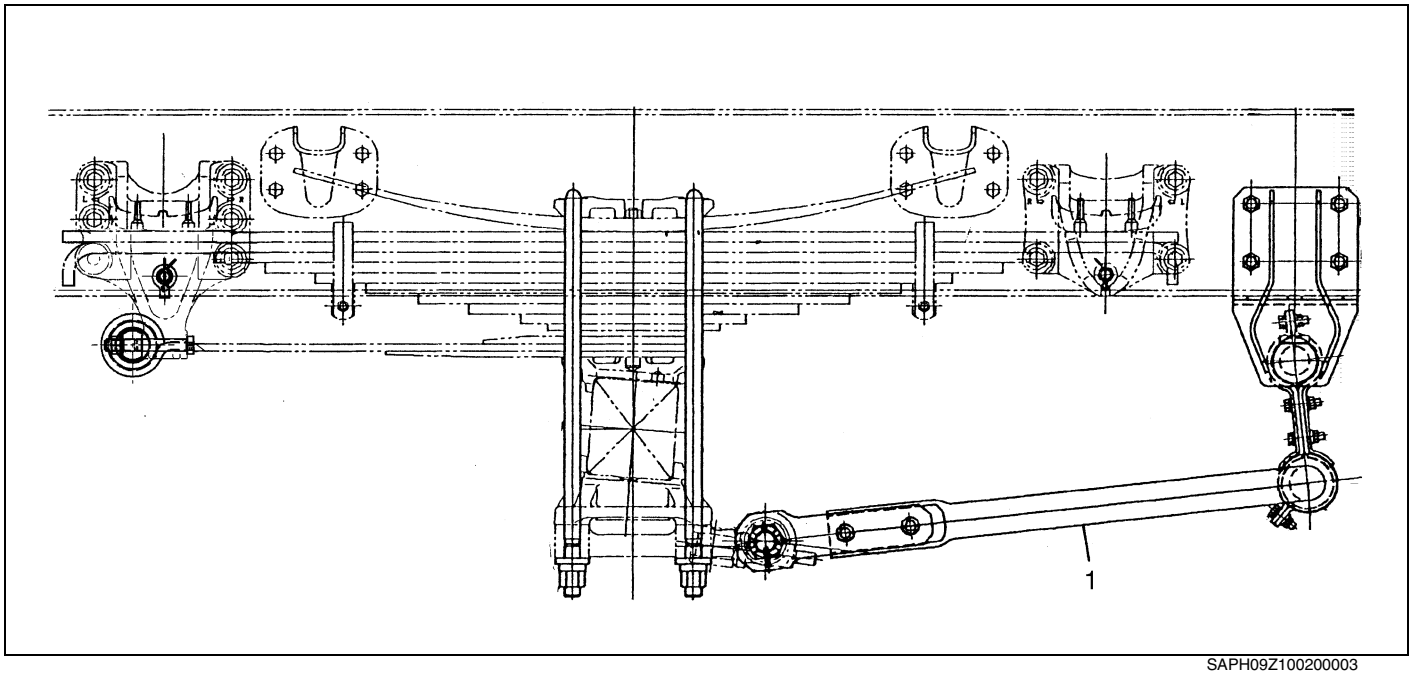


SAPH09Z100200003

| | |
|---|---|
| 1 Stabilizer (If so equipped) | |

## REAR SUSPENSION (HELPER RUBBER)

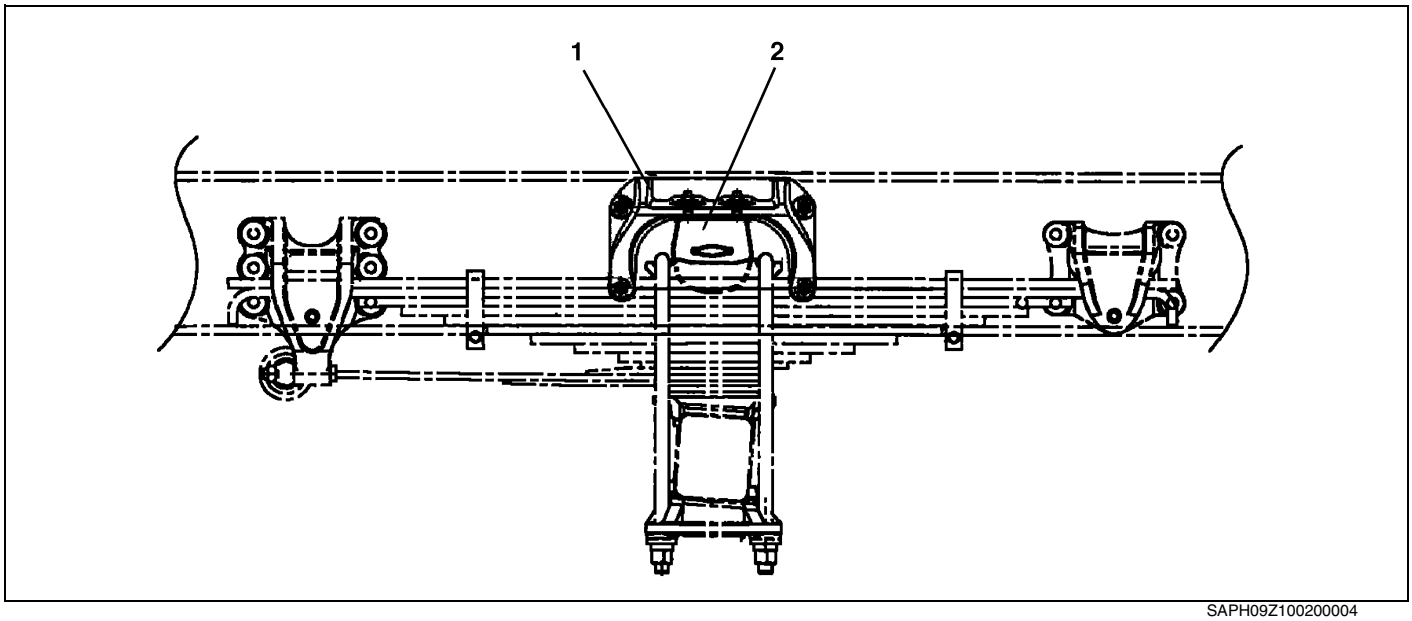


SAPH09Z100200004

| | |
|---|---|
| 1 Bracket | 2 Helper rubber |

# TROUBLESHOOTING

EN09Z1002F300001

| Symptom | Possible cause | Remedy/Prevention |
|---|---|---|
| **Rough ride** | Broken leaves | Replace the leaves. Check the load capacity rating. |
| | Cracked or damaged | Replace the leaves. Check the load capacity rating. |
| | Overloading | Decrease the load. |
| **Heavy sway** | Inoperative shock absorber | Replace the shock absorber. |
| **Leaves broken at the center bolt hole** | Loosen U-bolts | Replace the leaves and tighten the U-bolts to specified torque. |
| **Squeaking of the leaves** | Friction between the leaves | Apply chassis grease between leaves. |

# COMPONENT LOCATOR

EN09Z1002D100001

## FRONT SUSPENSION

(Representative type)

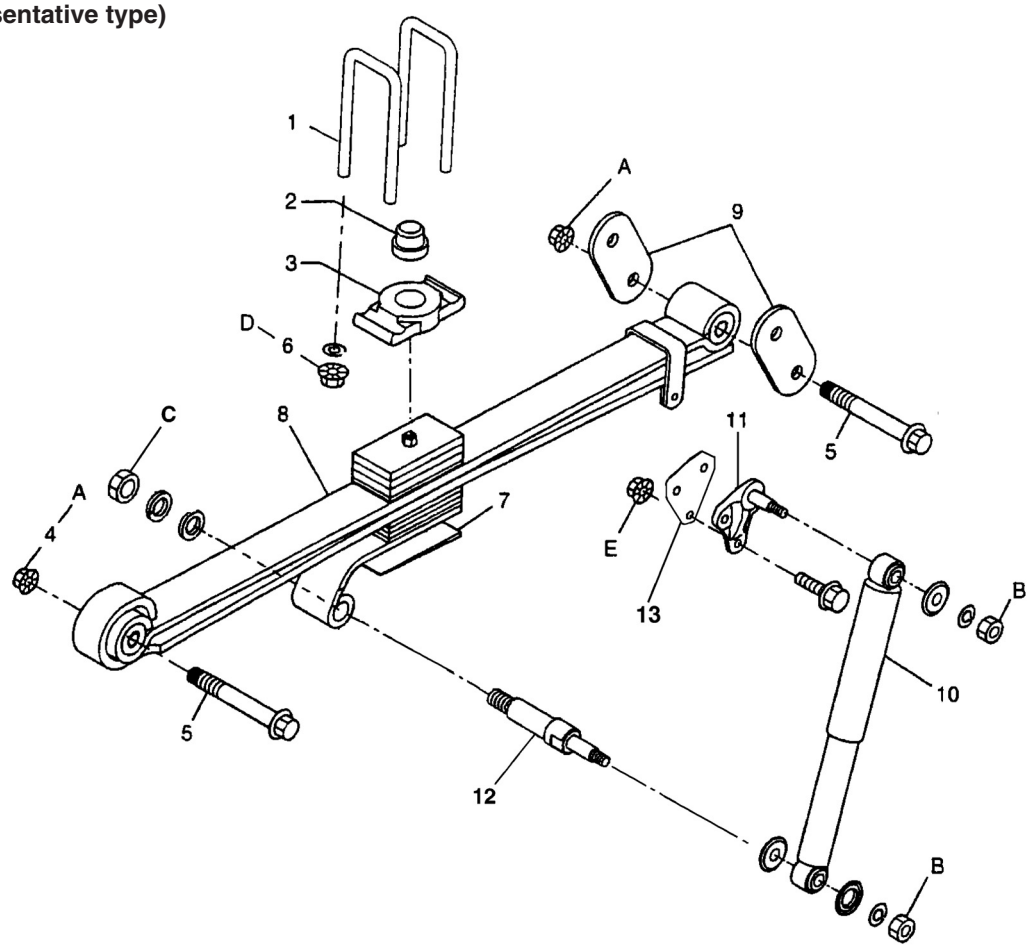


SAPH09Z100200005

| | | | |
|---|---|---|---|
| 1 | U-bolt | 8 | Leaf spring assembly |
| 2 | Spring bumper | 9 | Shackle |
| 3 | Spring pad | 10 | Shock absorber |
| 4 | Nut | 11 | Shock absorber bracket |
| 5 | Spring pin | 12 | Shock absorber pin |
| 6 | U-bolt nut | 13 | Spacer |
| 7 | Caster shim | | |

**Tightening torque** **Unit: N·m {kgf·cm, lbf·ft}**

| | | | |
|---|---|---|---|
| A | 375-425 {3,824-4,334, 277-313} | D | 370-472 {3,773-4,813, 273-348} |
| B | 169-227 {1,724-2,314, 125-167} | E | 91-149 {928-1,519, 67-109} |
| C | 210-294 {2,142-2,998, 155-216} | | |

## REAR SUSPENSION

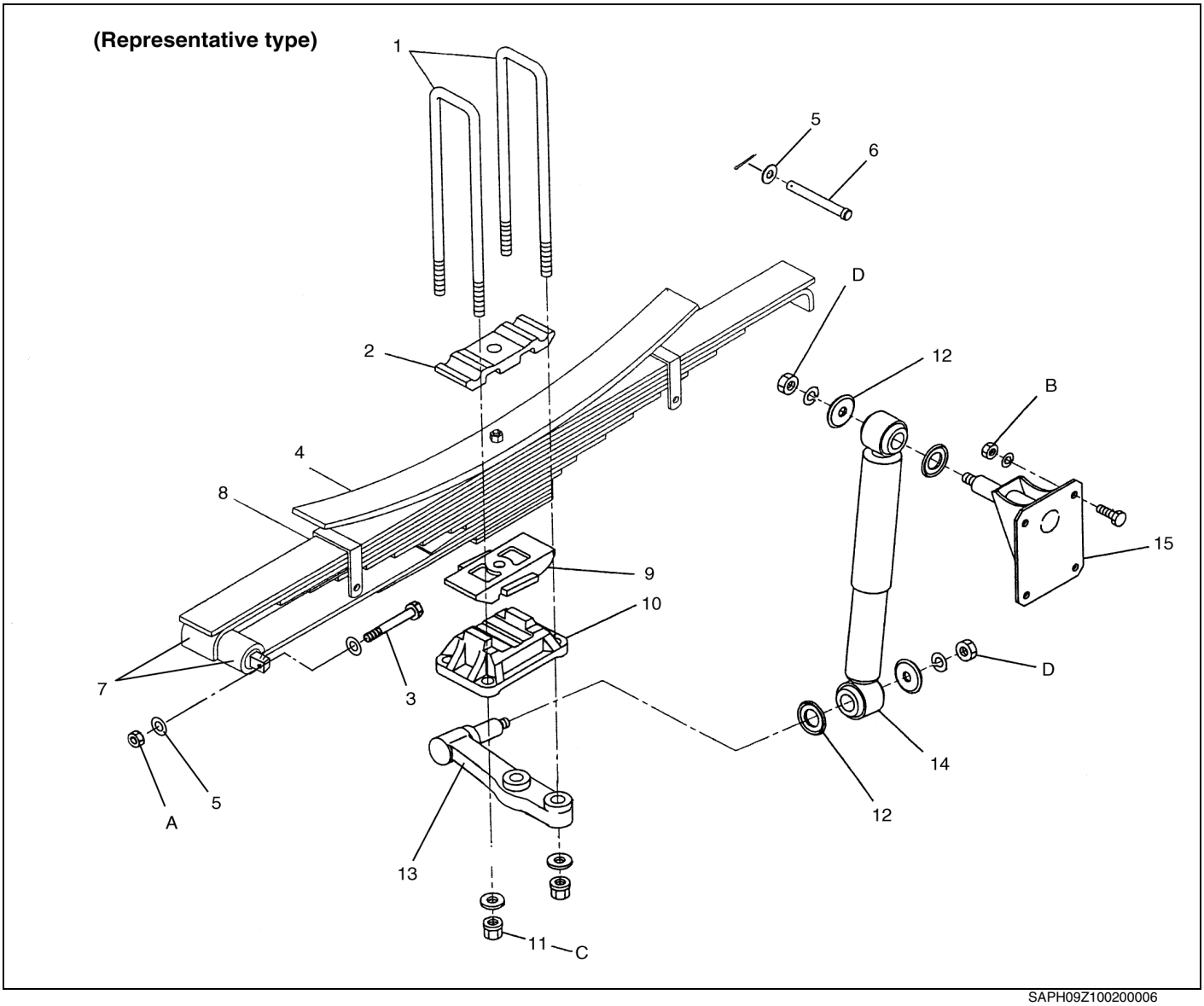


SAPH09Z100200006

| | | | |
|---|---|---|---|
| 1 | U-bolt | 9 | Rear spring upper seat |
| 2 | Spring pad | 10 | Rear spring lower seat |
| 3 | Flange bolt | 11 | U-bolt nut |
| 4 | Auxiliary leaf spring (If so equipped) | 12 | Cushion washer (If so equipped) |
| 5 | Washer | 13 | Rear bracket sub assembly (If so equipped) |
| 6 | Pin | 14 | Shock absorber (If so equipped) |
| 7 | Tension leaf spring | 15 | Shock absorber bracket (If so equipped) |
| 8 | Leaf spring assembly | | |

**Tightening torque** **Unit: N·m {kgf·cm, lbf·ft}**

| | | | |
|---|---|---|---|
| A | 203-277 {2,070-2,824, 150-204} | C | 490-734 {4,997-7,484, 362-541} |
| B | 122-182 {1,244-2,855, 90-134} | D | 180-240 {1,836-2,447, 133-176} |

## REAR SUSPENSION (STABILIZER)

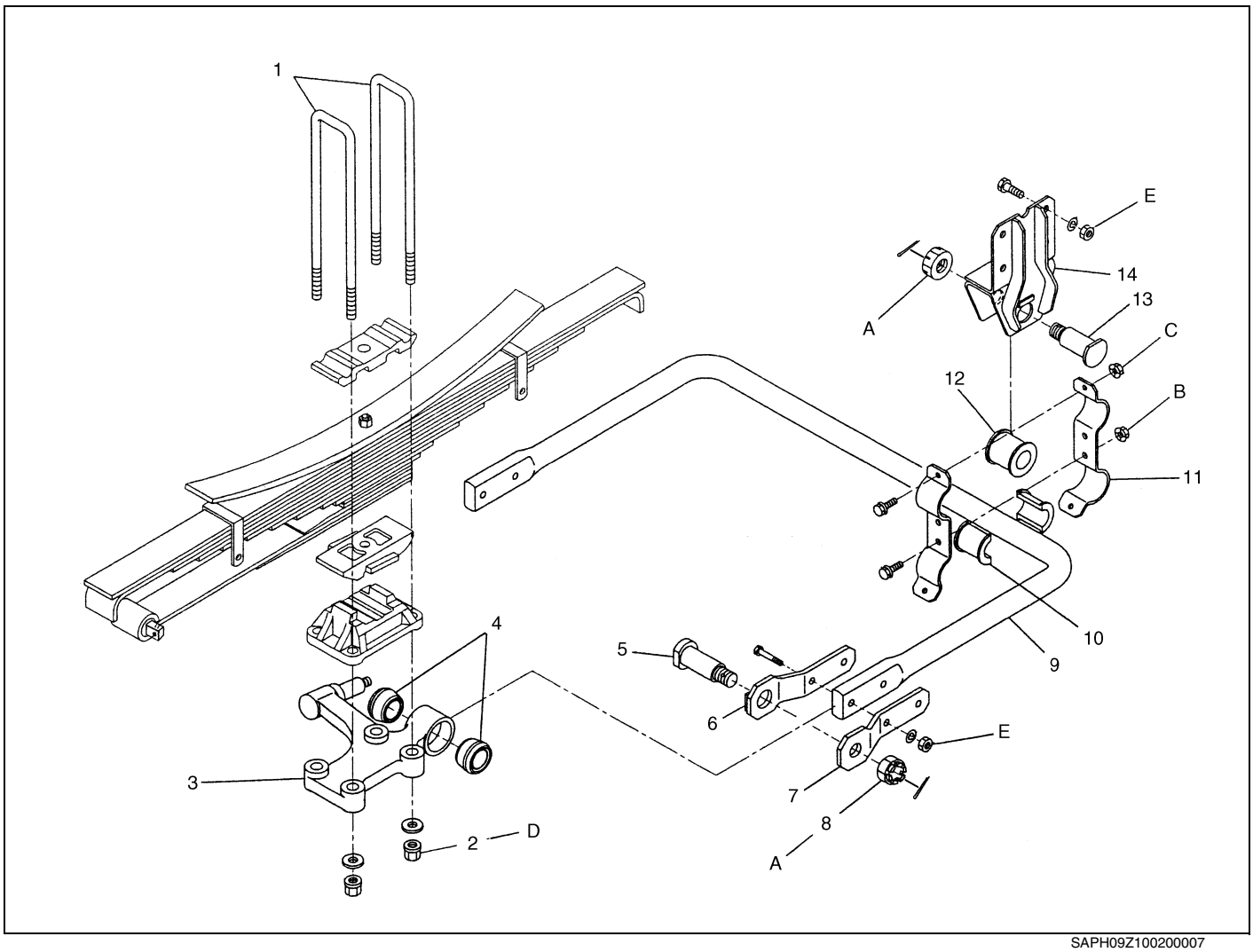


SAPH09Z100200007

| | | | |
|---|---|---|---|
| 1 | U-bolt | 8 | Slotted nut |
| 2 | U-bolt nut | 9 | Stabilizer bar |
| 3 | Rear bracket sub assembly | 10 | Stabilizer bar sleeve |
| 4 | Rubber bushing | 11 | Stabilizer lever |
| 5 | Stabilizer link pin | 12 | Stabilizer bar sleeve |
| 6 | Stabilizer lever sub assembly | 13 | Stabilizer link pin |
| 7 | Stabilizer lever | 14 | Stabilizer bracket sub assembly |

**Tightening torque** **Unit: N·m {kgf·cm, lbf·ft}**

| | | | |
|---|---|---|---|
| A | 180-240 {1,836-2,447, 133-176} | D | 490-734 {4,997-7,484, 362-541} |
| B | 53-89 {541-907, 39-65} | E | 107-147 {1,091-1,498, 79-108} |
| C | 35-51 {357-520, 26-37} | | |

## REAR SUSPENSION (HELPER RUBBER)

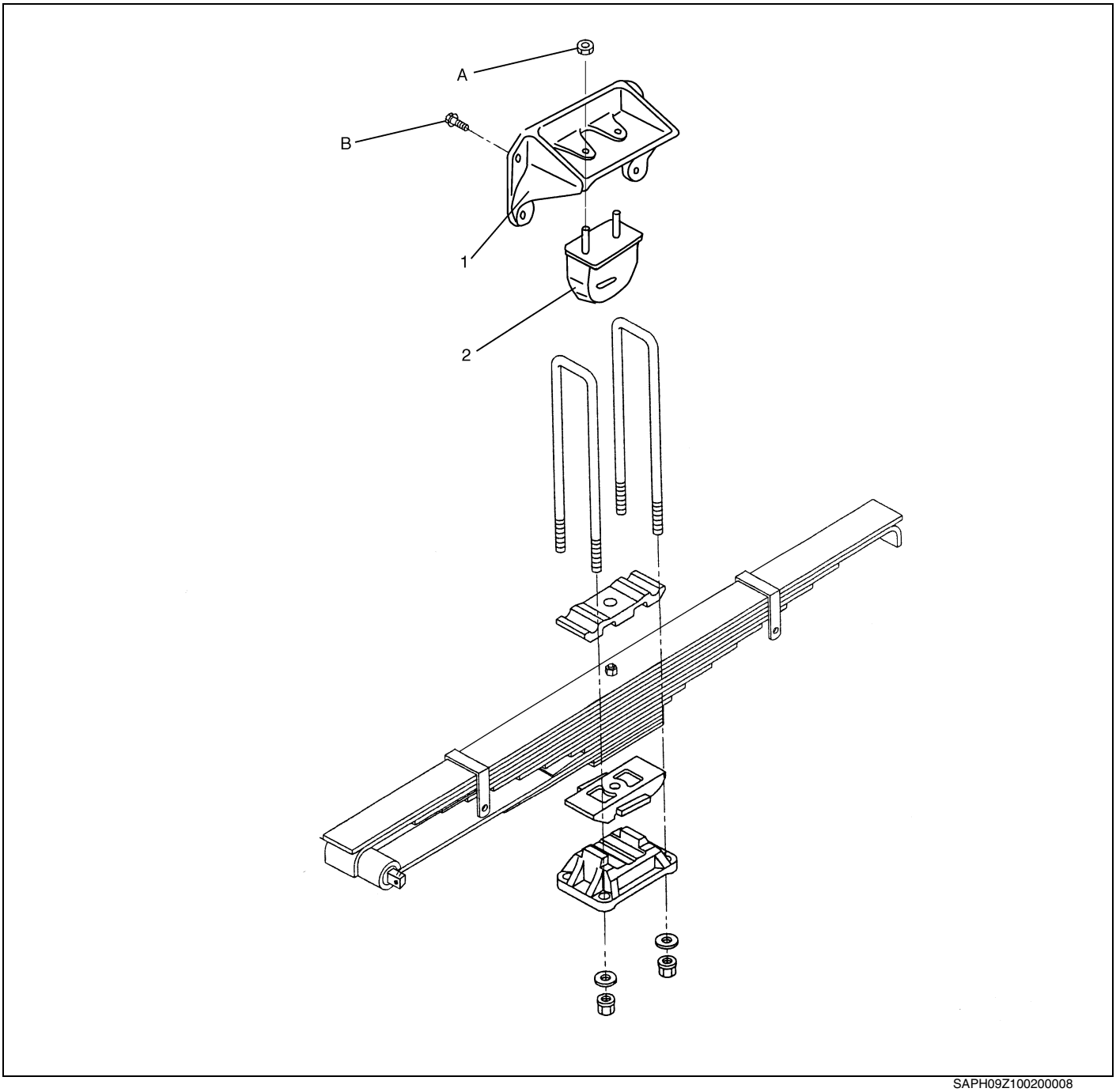


SAPH09Z100200008

| | | | |
|---|---|---|---|
| 1 | Bracket | 2 | Helper rubber |

**Tightening torque** **Unit: N·m {kgf·cm, lbf·ft}**

| | | | |
|---|---|---|---|
| A | 73-109 {745-1,111, 54-80} | B | 122-182 {1,244-1,856, 90-134} |

# OVERHAUL

EN09Z1002H200001

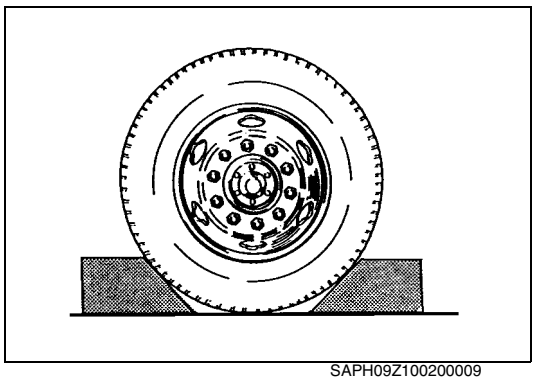
SAPH09Z100200009

## IMPORTANT POINTS - DISMOUNTING

**1. SUPPORT THE FRAME WITH STANDS**
(1) Park the vehicle on level ground.
(2) Be sure to block the wheels before dismounting.

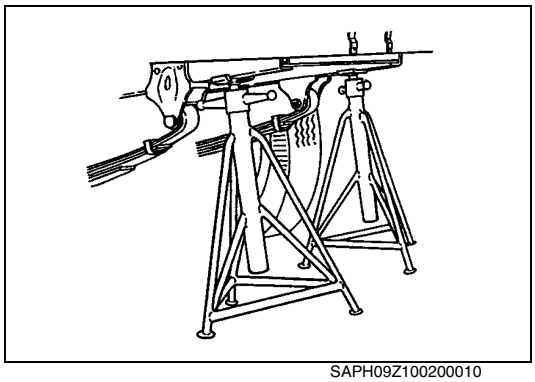
SAPH09Z100200010

(3) Jack up the axle, and support the frame with stands.
(4) Remove the tires.

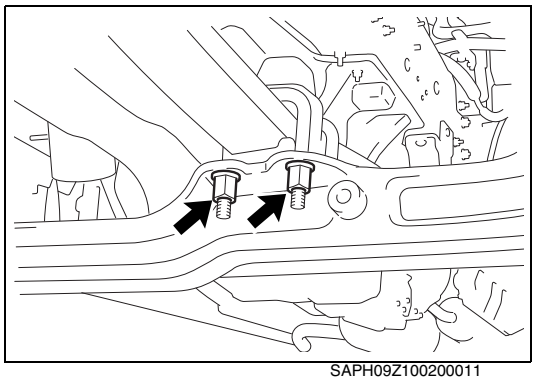
SAPH09Z100200011

**2. REMOVAL OF THE U-BOLT**
(1) Remove the shock absorber.
(2) Support the axle with a jack.
(3) Remove the U-bolt mounting nuts.

**NOTICE**
**When cutting off the U-bolts (due to rusted threads) with a torch, never direct the flame toward the leaves or allow sparks to come in contact with the leaves.**

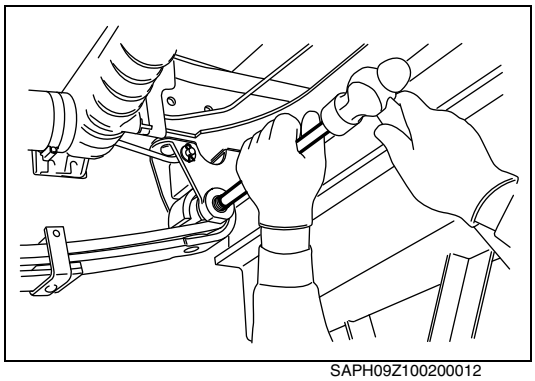
SAPH09Z100200012

**3. REMOVAL OF THE SPRING PIN (FRONT SUSPENSION)**
(1) Use a brass rod to remove the spring pins from the shackle and spring bracket.

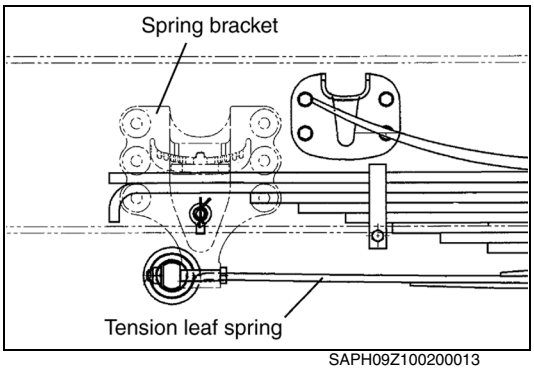

SAPH09Z100200013

**4. REMOVAL OF THE TENSION LEAF SPRING (REAR SUSPENSION)**

(1) Remove the lock nuts and washers which connect to the spring bracket.

## IMPORTANT POINTS - DISASSEMBLY

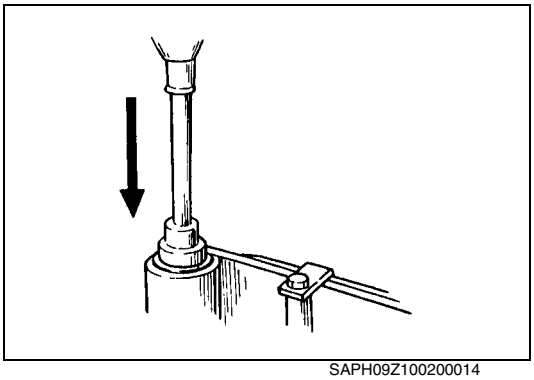
SAPH09Z100200014

**1. REPLACEMENT OF THE BUSHING (FRONT SUSPENSION)**

(1) Use a suitable tool to press out the old bushing.
(2) Use a suitable tool to press in the new bushing.

**2. REPLACEMENT OF THE BUSHING (REAR SUSPENSION)**

(1) The bushing of the tension leaf cannot be replaced independently. Replace it along with the whole tension leaf.

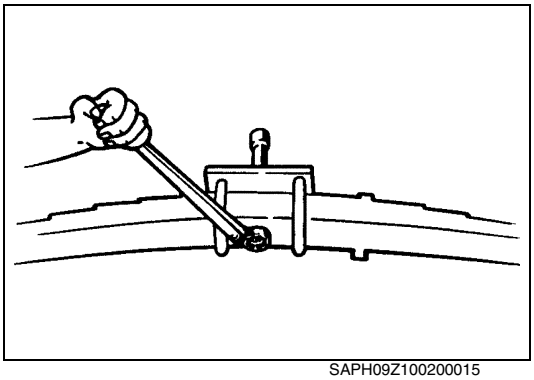
SAPH09Z100200015

**3. DISASSEMBLY OF THE LEAF SPRING**

**⚠ WARNING**
**When removing the center bolt lock nut, the spring leaves may jump. Care should be taken to avoid possible personal injury.**

(1) Remove the clip bolts.
(2) Use a vice or an arbor press to hold the leaf spring near the center bolt.
(3) Remove the center bolt.
(4) Loosen the vice or arbor press slowly, and separate the leaves.

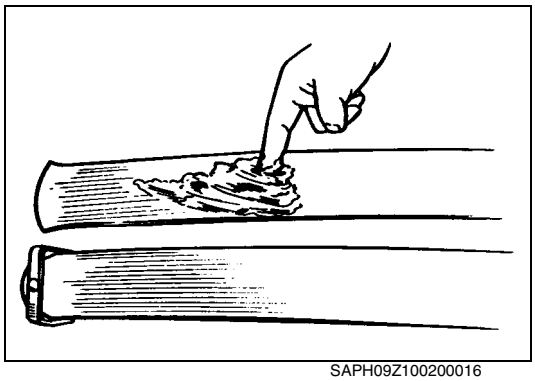
SAPH09Z100200016

## IMPORTANT POINTS - ASSEMBLY

### 1. ASSEMBLY OF THE LEAF SPRING

**⚠ WARNING**
**When clamping the spring leaves, they may jump. Care should be taken to avoid possible personal injury.**

(1) Apply coating on the leaf after removing rust, and apply chassis grease on both surfaces of leaves.

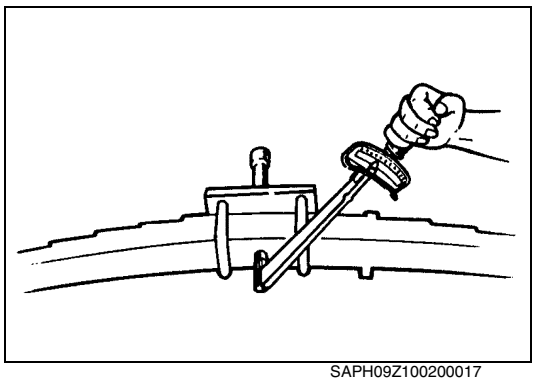
SAPH09Z100200017

(2) Align the leaf holes then secure the leaves with a vice or an arbor press.
(3) Insert the center bolt and tighten the lock nut.

**Tightening Torque:**
**90-100 N·m {918-1,020 kgf·cm, 66-74 lbf·ft}**

**NOTICE**
**When reassembling the leaf spring, replace the center bolt with a new one.**

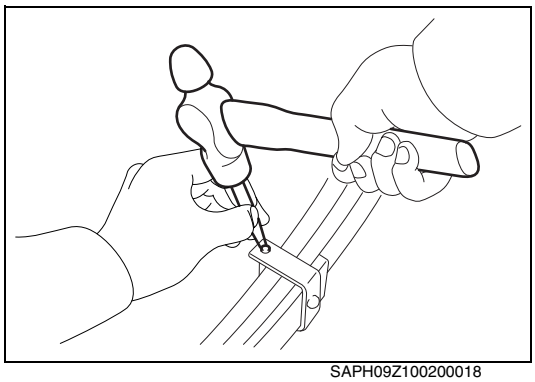
SAPH09Z100200018

(4) Tighten the clip bolts.
**Tightening Torque:**
**20 N·m {205 kgf·cm, 15 lbf·ft}**

**NOTICE**
**When tightening the clip bolts, use a new clip bolts.**

(5) Use a punch to peen the thread of the clip bolts.

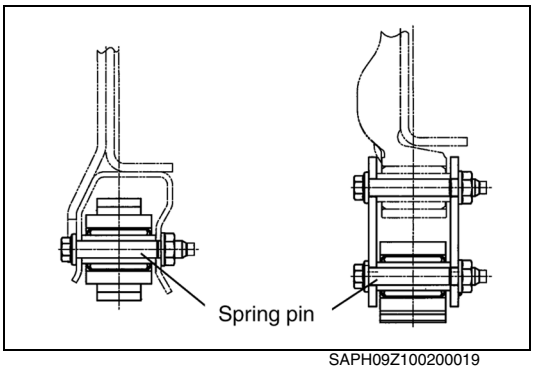

SAPH09Z100200019

## IMPORTANT POINTS - MOUNTING

### 1. INSTALLATION OF THE SPRING PIN (FRONT SUSPENSION)

(1) Use a copper hammer to install the spring pin.

**NOTICE**

**Apply chassis grease on the surface of the bushing and spring pin before installing.**

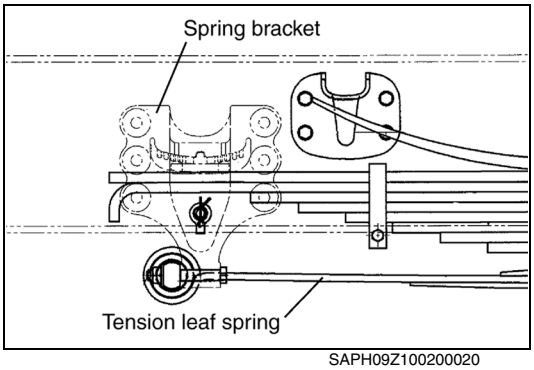

SAPH09Z100200020

### 2. INSTALLATION OF THE REAR SPRING ASSEMBLY

(1) Install the tension leaf spring of the rear spring assembly to the spring bracket.

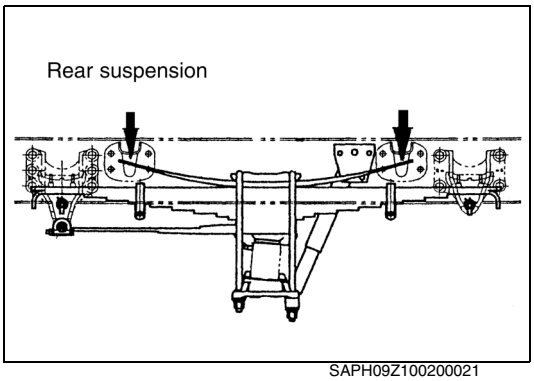

SAPH09Z100200021

### 3. LUBRICATION (REAR SUSPENSION)

(1) Lubricate the following parts with chassis grease.

- Auxiliary spring slide seats

**HINT**

**Do not apply chassis grease to other parts and Front suspension.**

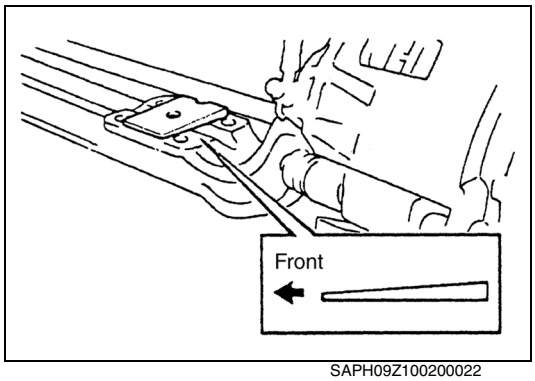

SAPH09Z100200022

**4. INSTALLATION OF THE U-BOLT**

(1) Put the caster shim on the front axle I-beam part of the each side. (For front suspension)

(2) Lift the axle using a jack and align the hole of the leaf spring center bolt and the hole of the axle I-beam.

**NOTICE**

**Axle and suspension assembly are heavy, therefore be careful when handling them.**

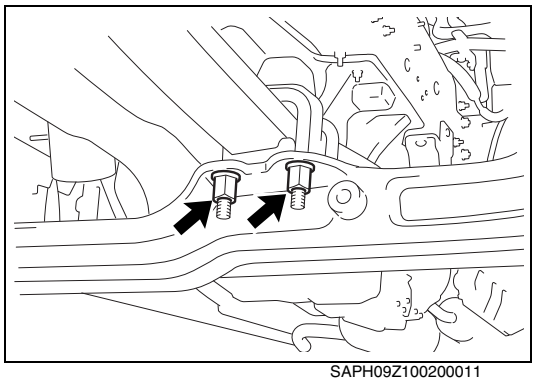
SAPH09Z100200011

(3) Put the spring pads and bumper rubbers on the leaf springs.

(4) Set the U-bolts so that they catch the spring pads and tighten the U-bolt nuts temporarily.

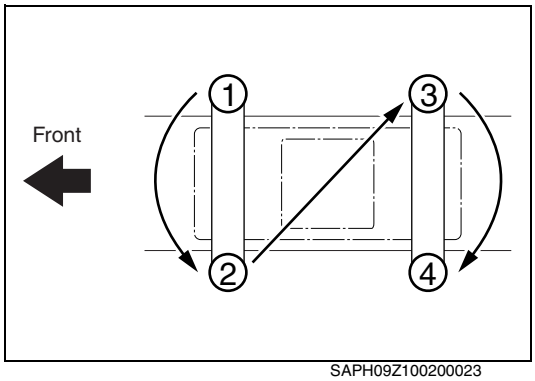

SAPH09Z100200023

(5) Tighten the U-bolt nuts (4 pieces) alternately right and left and equally.
After repeating this operation 3 to 5 times, tighten the nuts to the specified torque.

**Tightening Torque: N·m {kgf·cm, lbf·ft}**

| Model | HINO 238, 258, 268, 338, 358 (NE, NF, NJ, NV, NH) |
|---|---|
| Front | 370-472 {3,773-4,813, 273-348} |
| Rear | 490-734 {4,997-7,484, 362-541} |

# INSPECTION AND REPAIR

EN09Z1002H300001

**Unit: mm {in.}**

| Inspection item | | Standard | Limit | Remedy | Inspection procedure |
|---|---|---|---|---|---|
| **Spring pin: Outside diameter** | **Rear** | **31.66 {1.246}** | **31.30 {1.232}** | **Replace.** | **Measure** 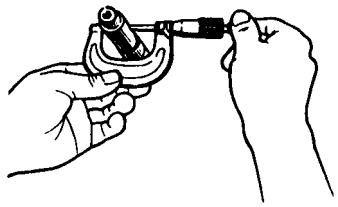 |
| **Leaf: Damage and wear** | | **—** | **—** | **Replace.** | **Visual check** 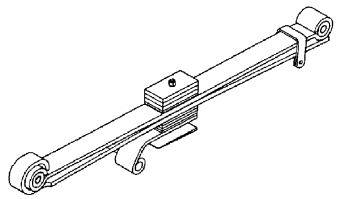 |
| **Spring bumper: Damage and wear** | | **—** | **—** | **Replace, if necessary.** | **Visual check** 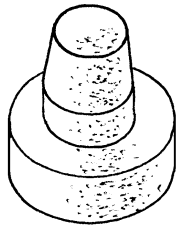 |
| **U-Bolt: Damage** | | **—** | **—** | **Replace, if necessary.** | **Visual check** 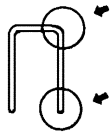 |
| **Rear stopper rubber: Damage or crack** | | **—** | **—** | **Replace, if necessary.** | **Visual check** 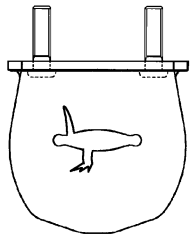 |
| **Shock absorber: Operation, oil leak and damage** | | **—** | **—** | **Replace, if necessary.** | **Visual check** 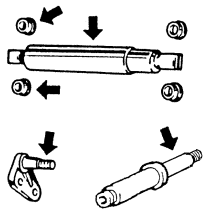 |
| **Cushion: Damage and wear** | | **—** | **—** | | |
| **Shock absorber pin and bracket: Damage and wear** | | **—** | **—** | | |

| Inspection item | Standard | Limit | Remedy | Inspection procedure |
|---|---|---|---|---|
| **Shackle:<br>Damage** | **—** | **—** | **Replace,<br>if necessary.** | **Visual check**<br> 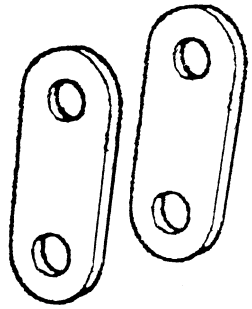 |
| **Stabilizer Bar:<br>Damage<br>(If so equipped)** | | | **Replace,<br>if necessary.** | **Visual check**<br> 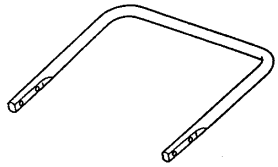 |
| **Stabilizer Sleeve:<br>Wear<br>(If so equipped)** | | | | |
| **Stabilizer Bushing:<br>Wear<br>(If so equipped)** | | | | |
| **Slide Seat:<br>Wear** | **—** | **2 {0.08}** | **Replace.** | **Measure: thickness from bolt head as shown below.**<br> 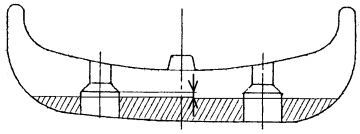 |
| **Helper Bracket:<br>Wear** | **6 {0.236}** | **2 {0.08}** | **Replace.** | **Measure: thickness**<br> 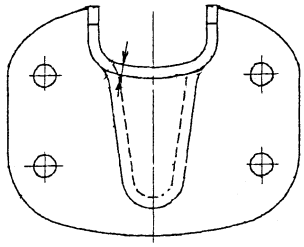 |
| **Front spring bushing:<br>Damage and crack** | **—** | **—** | **Replace,<br>if necessary.** | **Visual check**<br> 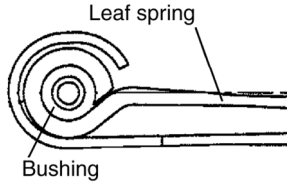 |

| Inspection item | Standard | Limit | Remedy | Inspection procedure |
|---|---|---|---|---|
| **Rear spring bushing: Damage and crack** | **—** | **—** | **Replace, if necessary.** | **Visual check** 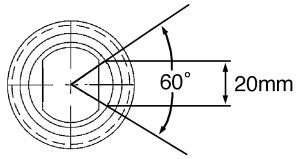  |

# AIR SUSPENSION ASSEMBLY

## DATA AND SPECIFICATIONS

EN09Z1002I200002

**REAR SUSPENSION**

| | | |
|---|---|---|
| **Model** | **HINO 238, 258, 268, 338, 358 (NE8J, NF8J, NJ8J, NV8J, NH8J)** | **HINO 338, 358 (NF8J, NV8J, NH8J)** |
| **Type** | **HENDRICSON COMFORT-AIR** | **HENDRICSON COMFORT-AIR-SD (SD: SEVERE DUTY)** |
| **Option** | **WITH HEIGHT CONTROL DEVICE** | |

# SYSTEM DIAGRAM FOR HEIGHT CONTROL

EN09Z1002I200003

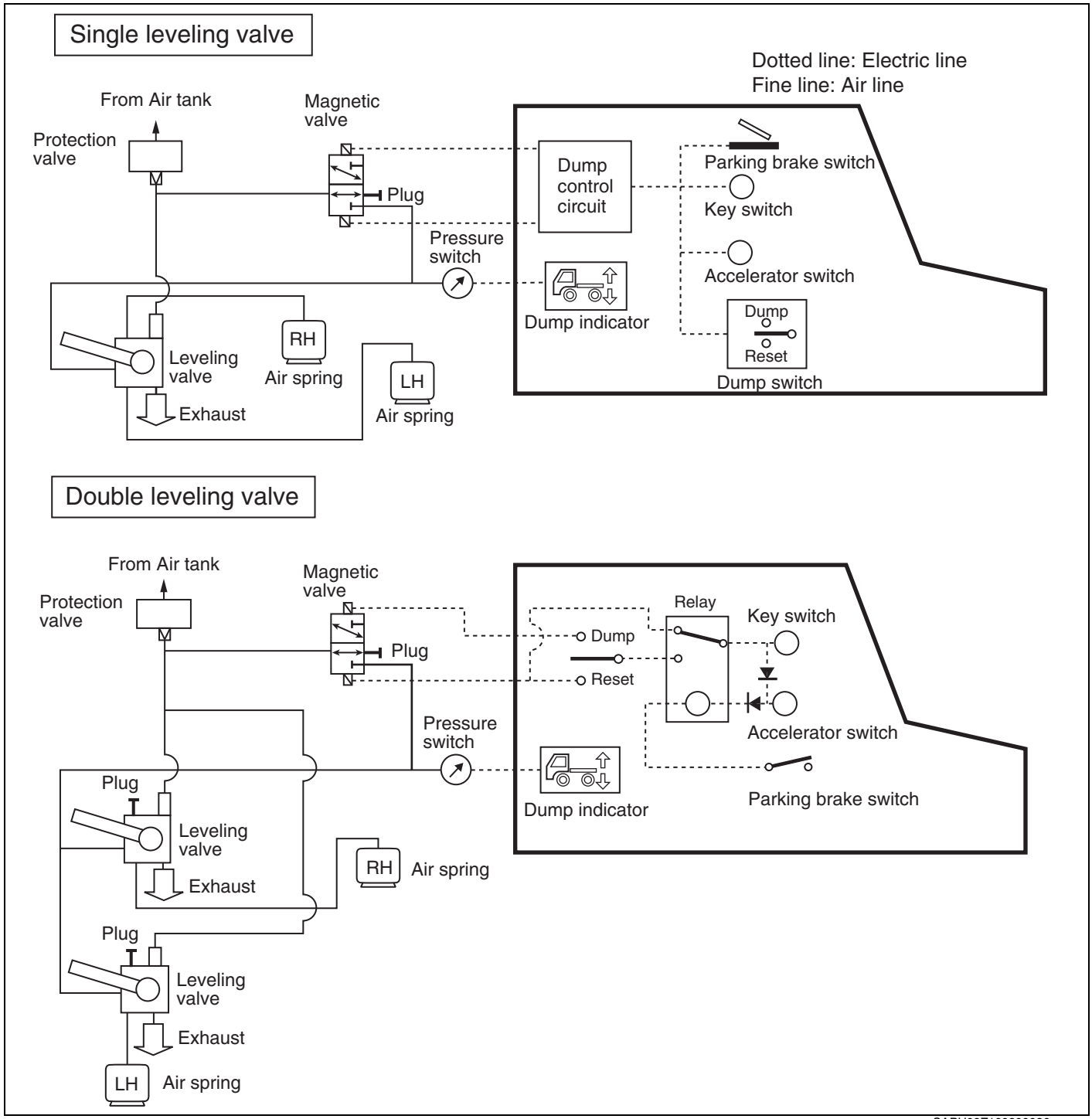


SAPH09Z100200036

**NOTICE**

**Refer to chapter “ELECTRIC WIRE” about air suspension dump electric circuit.**

# DESCRIPTION

EN09Z1002C100002

## REAR SUSPENSION

(Representative type)

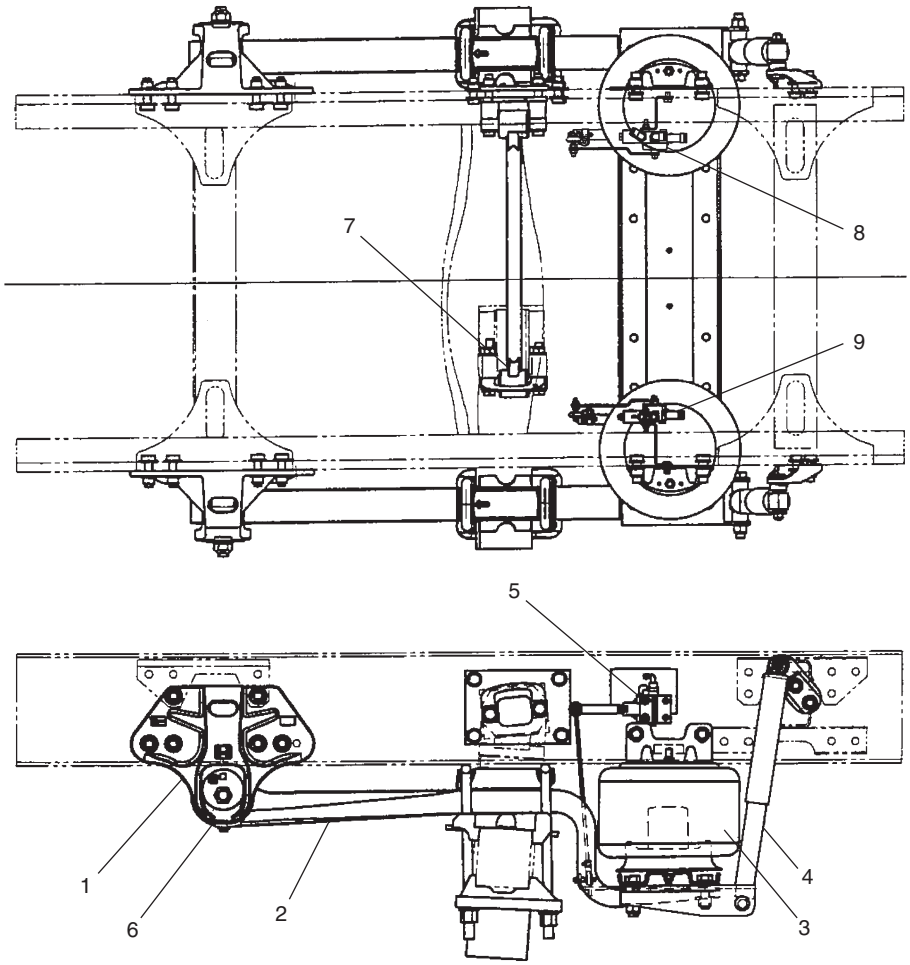


SAPH09Z100200037

| | | | |
|---|---|---|---|
| 1 | Spring hanger | 6 | Quick align base |
| 2 | Main support member | 7 | Transverse torque rod |
| 3 | Air spring | 8 | Leveling valve RH (If so equipped) |
| 4 | Shock absorber | 9 | Leveling valve LH |
| 5 | Height control valve | | |

# TROUBLESHOOTING

EN09Z1002F300002

| Symptom | Possible cause | Remedy/Prevention |
|---|---|---|
| **Abnormal sound occurs from the spring while driving.** | Eccentric wear of the shock absorber fitting pin | Replace the pin and/or rubber bushing. |
| **Uncomfortably (Rolling and pitching)** | Deflection and damage of the bushings of the main support member or the transverse rod | Replace the main support member or the bushing of the transverse rod. |
| | Faulty of the shock absorber | Replace the shock absorber. |
| | Faulty of the height control valve | Repair the height control valve. |
| **Vibration of the steering wheel, and the car shake** | Deflection of the bushing in the main support member or the transverse rod | Replace the main support member or the bushing of the transverse rod. |
| | Looseness of the transverse rod bracket bolt | Replace the lock nut and tighten with the specified torque. |
| **Vehicle height is not adjusted correctly** | Faulty of the height control | Repair the parts. |

# COMPONENT LOCATOR

EN09Z1002D100002

## REAR SUSPENSION

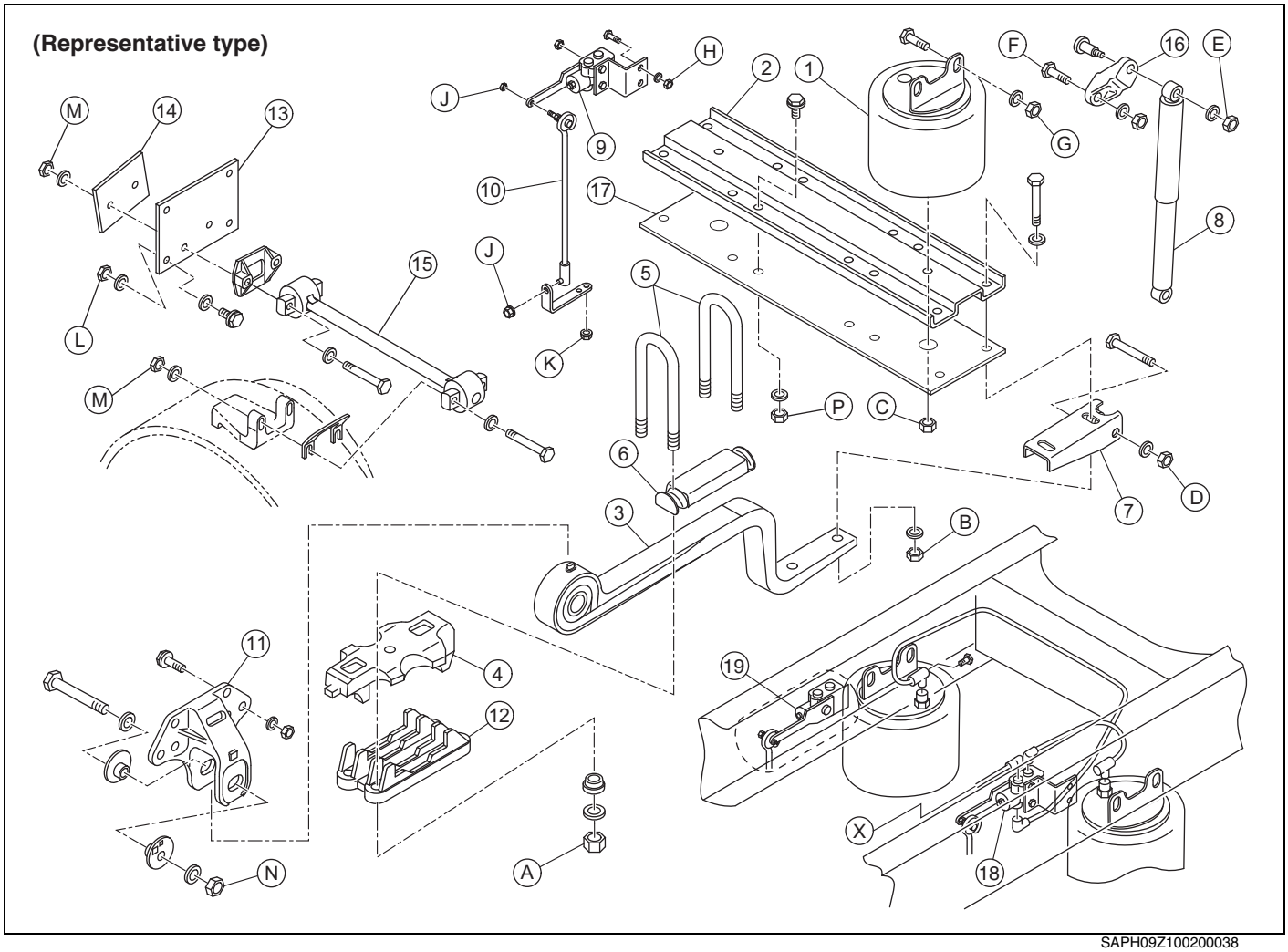


SAPH09Z100200038

| | | | |
|---|---|---|---|
| 1 | Air spring | 11 | Spring hanger |
| 2 | Cross channel | 12 | Bottom cap |
| 3 | Main support member | 13 | Inner reinforcement plate |
| 4 | Spring seat | 14 | Outer reinforcement plate |
| 5 | U-bolt | 15 | Transverse rod |
| 6 | Top pad | 16 | Upper shock absorber bracket |
| 7 | Lower shock absorber bracket | 17 | Plate |
| 8 | Shock absorber | 18 | Leveling valve LH |
| 9 | Height control valve | 19 | Leveling valve RH (If so equipped) |
| 10 | Link | X | From air tank |

**Tightening torque** **Unit: N·m {kgf·cm, lbf·ft}**

| | | | |
|---|---|---|---|
| **A** | **545-611 {5,558-6,230, 402-450}** | **H** | **27-41 {276-417, 20-30}** |
| **B** | **355-435 {3,619-4,434, 262-320}** | **J** | **13-17 {133-173, 10-12}** |
| **C** | **27-41 {276-418, 20-30}** | **K** | **13-17 {133-173, 10-12}** |
| **D** | **215-245 {2,193-2,498, 159-180}** | **L** | **203-281 {2,070-2,864, 150-207}** |
| **E** | **69-95 {704-968, 51-70}** | **M** | **203-281 {2,070-2,864, 150-207}** |
| **F** | **203-281 {2,070-2,864, 150-207}** | **N** | **500-600 {5,097-6,116, 369-442}:COMFORT-AIR**<br>**745-811 {7,595-8,267, 550-598}:COMFORT-AIR-SD** |
| **G** | **215-245 {2,193-2,498, 159-180}** | **P** | **170-230 {1,735-2,346, 125-169}** |

# OVERHAUL

EN09Z1002H200002

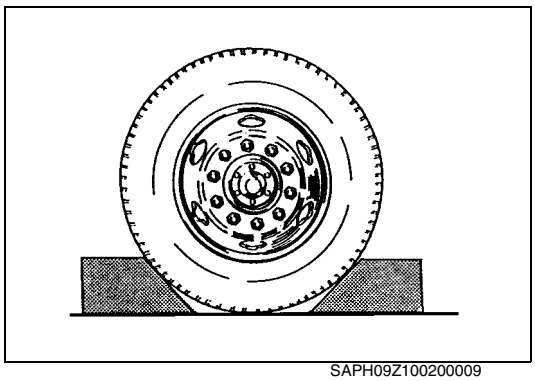
SAPH09Z100200009

## IMPORTANT POINTS - DISASSEMBLY

**1. SUPPORT THE FRAME WITH STAND.**
(1) Park the vehicle on level ground.
(2) Be sure to block the wheels before dismounting.

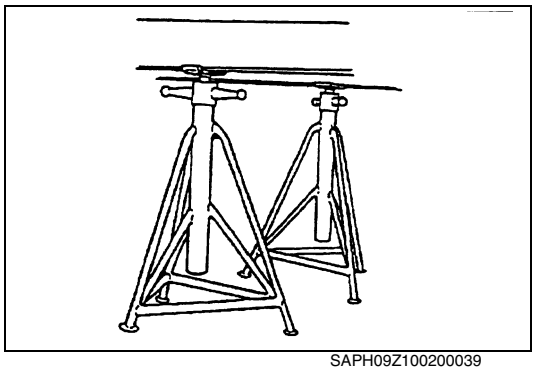
SAPH09Z100200039

(3) Jack up the axle, and support the frame with the stand.

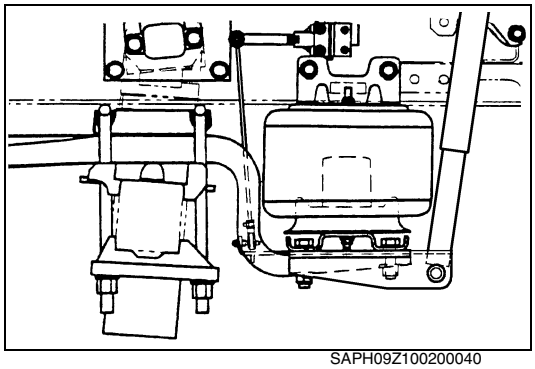
SAPH09Z100200040

**2. DISCONNECT THE SUSPENSION FROM REAR AXLE**
(1) Remove the U-bolt lock nuts and washers.
(2) Remove the U-bolts, bottom cap, and top pad.
(3) Remove the lock nuts and washers which connect the cross channel to both the main support members.
(4) Lift cross channel off the main support member with jacks.

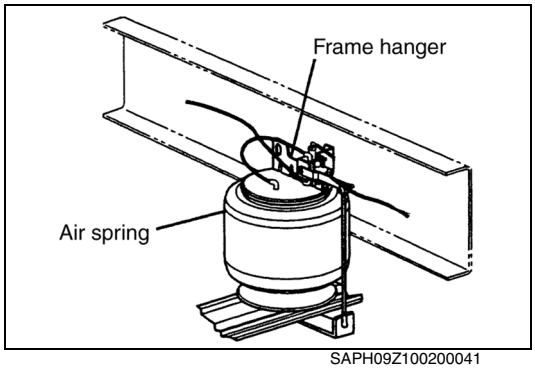

SAPH09Z100200041

**3. REMOVE OF MAIN SUPPORT MEMBERS**
(1) Release air pressure from the air springs.
(2) Remove the height control valve link from the valve by removing the nut and the lock washer.

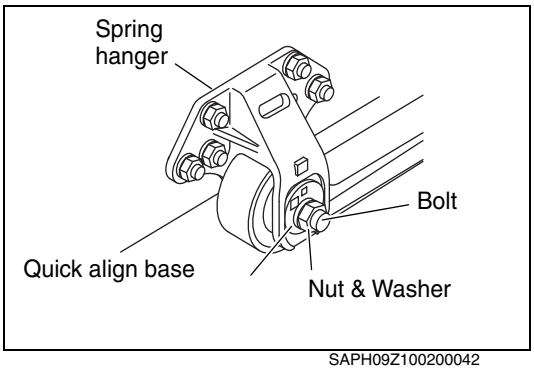

SAPH09Z100200042

(3) Remove the quick align bolts, lock nuts washers, and quick align bases from the spring hanger.
(4) Remove the main support member assembly.

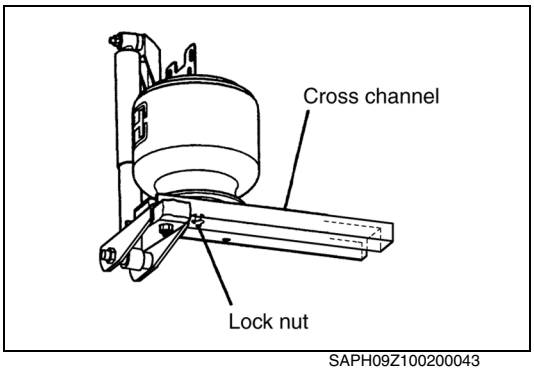

SAPH09Z100200043

**4. REMOVE OF CROSS CHANNEL**
(1) Remove the lock nuts and washers which connect the air spring to cross channel.
(2) Raise the cross channel by using jack if requires.

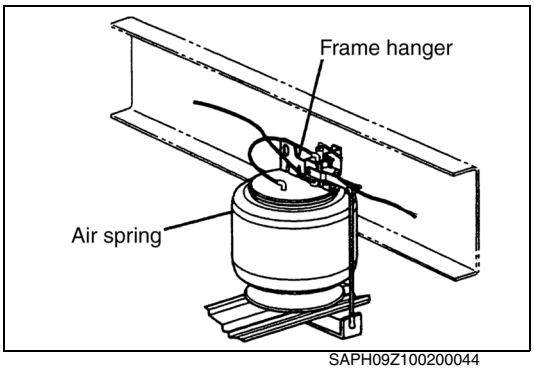

SAPH09Z100200044

**5. REMOVAL OF AIR SPRING**
(1) Remove the air line from the air spring seat.
(2) Remove the brass air fittings from the air spring, if necessary.
(3) Remove the lock nuts and washers which connect the air spring to the upper air spring frame hanger.
(4) Remove the air spring.
(5) Remove the air spring frame hanger, if necessary.

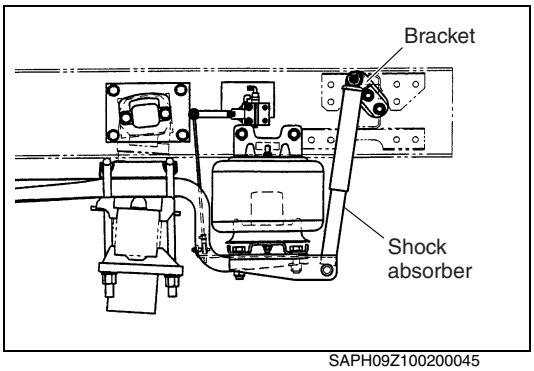

SAPH09Z100200045

**6. REMOVE OF SHOCK ABSORBER FRAME HANGER BRACKET**
(1) Remove the lock nuts and washers at both ends of the shock absorber.
(2) Remove the shock absorber completely from the chassis.
(3) Remove the lock nuts and washers which connect the shock absorber bracket to the frame.
(4) Remove the shock absorber bracket.

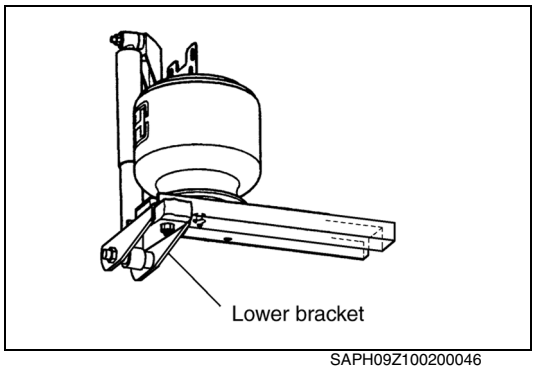

SAPH09Z100200046

**7. REMOVE OF SHOCK ABSORBER LOWER BRACKET**
(1) Remove the shock absorber completely from the chassis.
(2) Remove the shock absorber lower bracket.

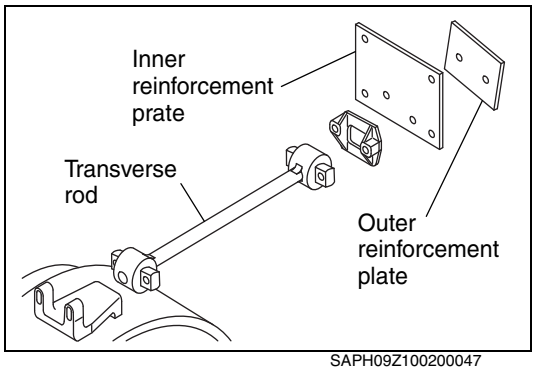

SAPH09Z100200047

**8. REMOVAL OF TRANSVERSE ROD**
(1) Remove the lock nuts and washers which connect the transverse rod to the frame.
(2) Remove the lock nuts and washers which connect to the axle bracket.
(3) Use Owatonna Tool Company's tool set to remove and install the transverse rod bushings. Follow their instructions.

## IMPORTANT POINTS - DISASSEMBLY

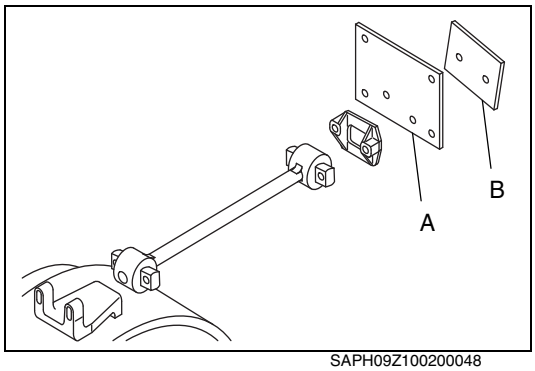

SAPH09Z100200048

**1. INSTALLATION OF TRANSVERSE ROD**
(1) Assemble the washer and lock nut to the bolt. Tighten the lock nut to specified torque.
(2) install the back-up plates.
(3) Position the straddle mount end of torque rod at the transverse rod to the frame, tighten the lock nuts to specified torque.

**NOTICE**
**All the nuts and bolts are lock type. Therefore these are not reusable. You should install a new one.**

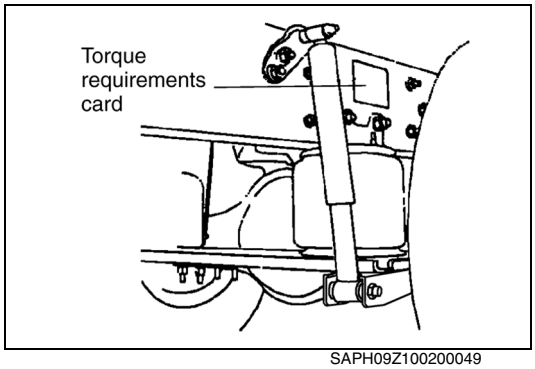

SAPH09Z100200049

**2. INSTALL OF MAIN SUPPORT MEMBERS AND AIR SPRING**
(1) Installation is in the reverse order of removal.

**NOTICE**
**Tighten fasteners to specified torque. Refer to on page SU02-23, or Torque Requirements card on the right frame.**

**3. CHECK THE AIR LEAKAGE.**
(1) Apply soapy water for each joint of air line and charge the compressed air of 780 kPa {8.0 kgf/cm$^2$, 110 lbf/in.$^2$} then check the leakage.

**4. ADJUSTMENT OF THE VEHICLE HEIGHT**

**NOTICE**

- **Adjustment should be done only after assembling.**
- **Adjustment should be done with the air pressure of 71-86 kPa {7.0-8.5 kgf/cm$^2$, 99-120 lbf/in.$^2$}, keeping on supplying the air while rotating the engine at the idle speed.**

(1) Measure the shock absorber length between upper and lower pins.

**Assembly standard**

| | |
|---|---|
| **19,000 lbs, 21,000 lbs** | **532.5 - 577.5 mm {20.97 - 22.73 in.}** |
| **23,000 lbs** | **535.5 - 580.5 mm {21.09 - 22.85 in.}** |
| **23,000 lbs SD** | **514.7 - 561.4 mm {20.27 - 22.10 in.}** |

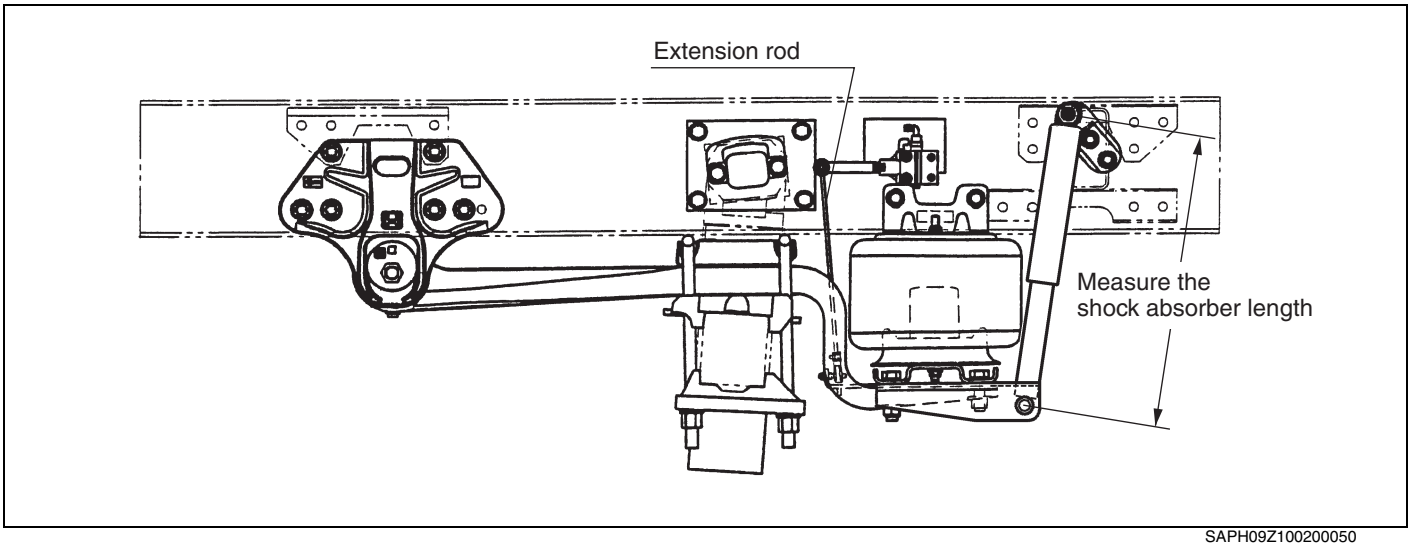


SAPH09Z100200050

(2) If the shock absorber length is not the assembly standard, adjust the extension rod length, so that the shock absorber length is the assembly standard.

# INSPECTION AND REPAIR

EN09Z1002H300002

**Unit: mm {in.}**

| Inspection item | Standard | Limit | Remedy | Inspection procedure |
|---|---|---|---|---|
| **Air spring:<br>Wear, damage and crack** | **—** | **—** | **Replace, if necessary.** | **Visual check**<br> 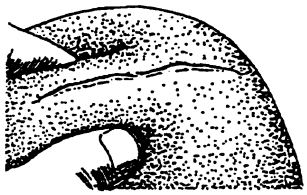 |
| **Main support member:<br>Crack and damage** | **—** | **—** | **Replace, if necessary.** | **Visual check**<br> 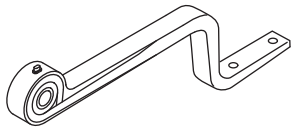 |
| **Bushing:<br>Wear, damage and crack** | **—** | **—** | | |
| **Cross channel:<br>Crack and damage** | **—** | **—** | **Replace, if necessary.** | **Visual check**<br> 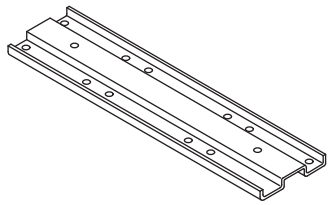 |
| **Spring seat:<br>Wear, damage and crack** | **—** | **—** | **Replace, if necessary.** | **Visual check**<br> 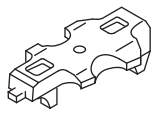 |
| **U-Bolt:<br>Damage** | **—** | **—** | **Replace, if necessary.** | **Visual check**<br> 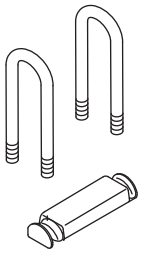 |
| **Pad:<br>Wear, damage and crack** | **—** | **—** | | |
| **Plate:<br>Crack and damage** | **—** | **—** | **Replace, if necessary.** | **Visual check**<br> 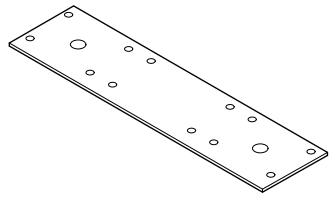 |

| Inspection item | Standard | Limit | Remedy | Inspection procedure |
|---|---|---|---|---|
| **Cross channel:<br>Crack and damage** | **—** | **—** | **Replace, if necessary.** | **Visual check**<br> 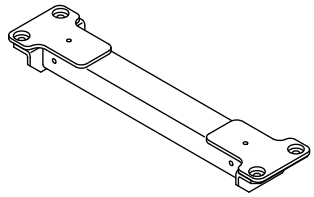 |
| **Shock absorber:<br>Operation, oil leak and damage** | **—** | **—** | **Replace, if necessary.** | **Visual check**<br> 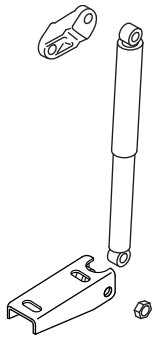 |
| **Upper and lower brackets:<br>Crack and damage** | **—** | **—** | | |
| **Transverse rod:<br>Crack and damage** | **—** | **—** | **Replace, if necessary.** | **Visual check**<br> 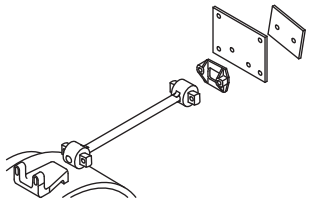 |
| **Transverse rod bushings:<br>Wear, damage and crack** | **—** | **—** | | |
| **Chassis Reinforcement:<br>Crack and damage** | **—** | **—** | | |
| **Spacer plate:<br>Crack and damage** | **—** | **—** | | |

# CHASSIS FRAME

FC02-001

**CHASSIS FRAME ..... FC02-2**
TROUBLESHOOTING ..... FC02-2
INSPECTION ..... FC02-2
REPAIRS ..... FC02-3

# CHASSIS FRAME

## TROUBLESHOOTING

EN10Z1102F300001

| Symptom | Possible cause | Remedy/Prevention |
|---|---|---|
| **Frame distortion (Vehicle inclination)** | Flattening or breakage of springs on one side | Replace spring |
| | Incorrect mounting (Attachment of heavy weight on one side of the vehicle) | Correct mounting |
| **Bent frame** | Overloading or concentrated weight on rear end of frame | • Correct load<br>• Correct with frame correction device |
| **Frame cracking or rivets breaking** | Wrong body mounting | Correct mounting |
| | Overloading | • Improvement of the usage<br>• Reinforce with stiffener |

## INSPECTION

EN10Z1102H200001

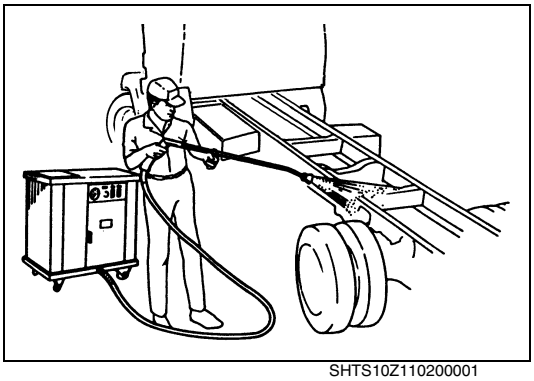

SHTS10Z110200001

**1. CLEAN THE FRAME**

**NOTICE**

**While inspecting or repairing, stop the engine and block the wheels. When cleaning with a steam cleaner, use safety goggles.**

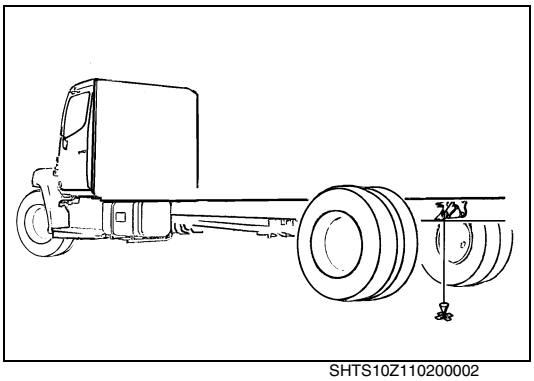

SHTS10Z110200002

**2. PLACE THE VEHICLE ON A FLAT SURFACE, HANG A WEIGHT FROM EACH MEASURING POINT ON THE FRAME, AND MARK THE FLOOR BELOW THE WEIGHT.**

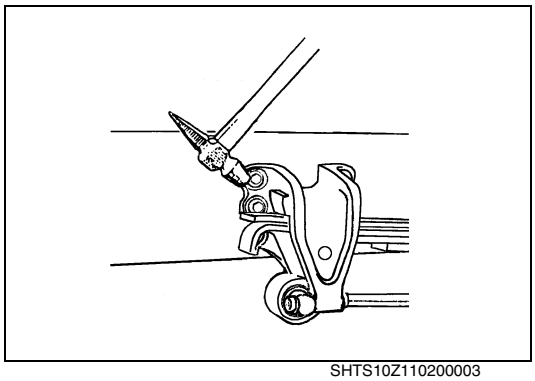
SHTS10Z110200003

**3. INSPECT THE FRAME FOR BENDING, TWISTING OR OTHER DEFORMATION.**

**4. CHECK THE TIGHTENESS OF THE RIVETS, AND BOLTS.**

# REPAIRS

EN10Z1102H200002

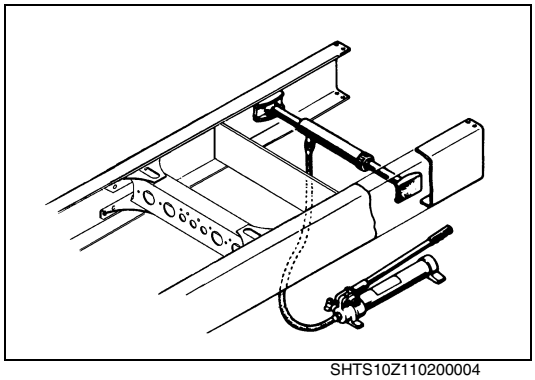
SHTS10Z110200004

**1. FRAME ALIGNMENT**

(1) Correct the frame alignment.

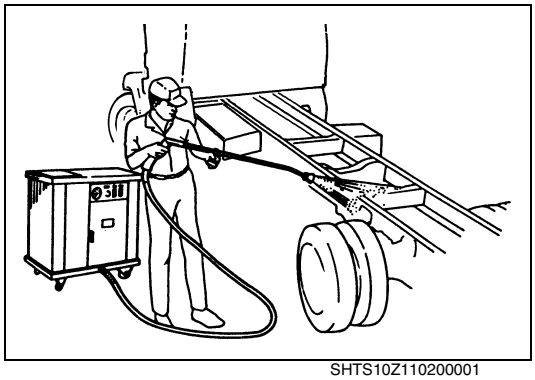
SHTS10Z110200001

**2. CRACKING OF THE FRAME**

(1) Clean the area around the cracks with a steam cleaner, soap and water, or a solvent.

**NOTICE**

**When cleaning with a steam cleaner, use safety goggles.**

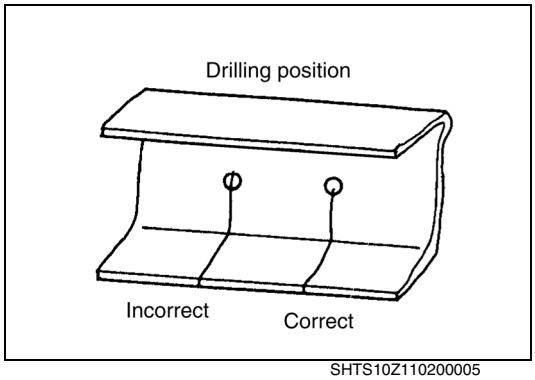

SHTS10Z110200005

**3. REPAIRING OF FRAME CRACKS**

(1) Perform the procedure for preventing the enlargement of cracks.

**NOTICE**

**Do not make drill holes on the frame flanges except when repairing the cracks.**

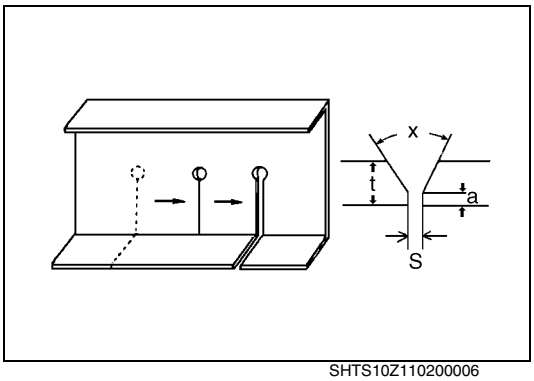

SHTS10Z110200006

(2) Make the V-shape groove with a grinder along the frame crack according the following table.

Unit: mm {in.}

| t | x° | s | a |
|---|---|---|---|
| 4.5 {0.18} | 90 | 1.0 {0.039} | 0 |
| 6 {0.24} | 70 | 1.0 {0.039} | 0 |
| 7 {0.28} | 70 | 1.5 {0.059} | 1 {0.039} |
| 8 {0.31} | 70 | 1.5 {0.059} | 1 {0.039} |
| 9 {0.35} | 70 | 1.5 {0.059} | 1 {0.039} |
| 10 {0.39} | 60 | 1.5 {0.059} | 1 {0.039} |
| 12 {0.47} | 60 | 1.5 {0.059} | 1 {0.039} |
| 16 {0.63} | 60 | 2.0 {0.079} | 1 {0.039} |

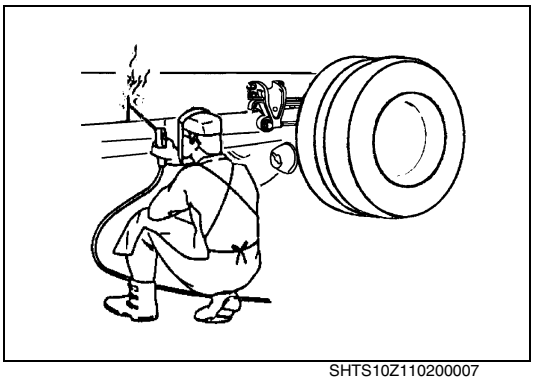
SHTS10Z110200007

(3) Use an electric welder.
**Refer to page FC02-7 for WELDING CONDITION (WHEN WELDING ROD IS USED).**

**⚠ WARNING**

- **Disconnect the negative battery ground cable before using arc welding equipment.**
- **While welding, make sure that there are no flammable materials such as oil, rags, etc. around. As welded parts becomes extremely hot and sparks are present, make sure that there are no items such as harnesses, tubes, pipes, suspension component, etc. which may be damaged.**
- **If material is allowed to sputter onto the spring leaf during welding its strength will be significantly diminished. It should therefore be covered with a protective sheet. Also, for the same reason, the spring leaf should never be used as a ground for arc welding.**
- **When arc welding, ventilate or wear antitoxic mask for noxious gas.**
- **To prevent burns, electric shock and gas poisoning during arc welding, wear a helmet, apron, antitoxin mask, safety goggles, arm coverings, leg covering, safety boots and gloves.**

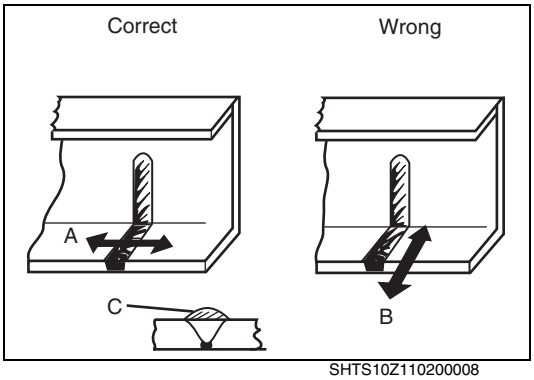

SHTS10Z110200008

(4) After welding, shake the grinder crosswise the bead line A, along direction B, to polish the welded area as illustrated in C.
Grind and polish the bead line A so that the frame surface becomes even.

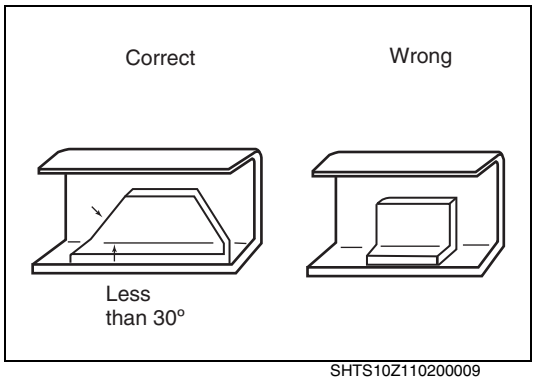

SHTS10Z110200009

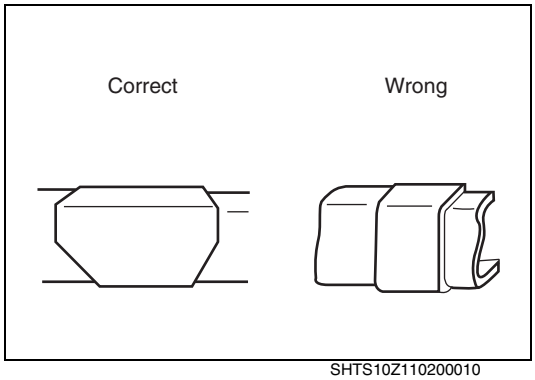

SHTS10Z110200010

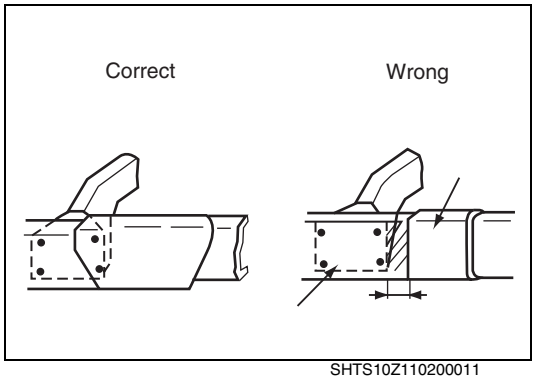

SHTS10Z110200011

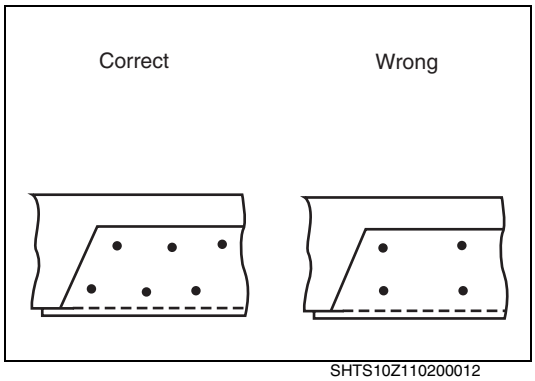

SHTS10Z110200012

(5) Reinforcement patching method.
Patch-plate with ends squared off rather than tapered can cause damage.
The patching plate thickness should be the same as the frame.

(6) Be sure to fasten the bolts at the hole locations of ups and downs (use rivets or perform the plug welding).

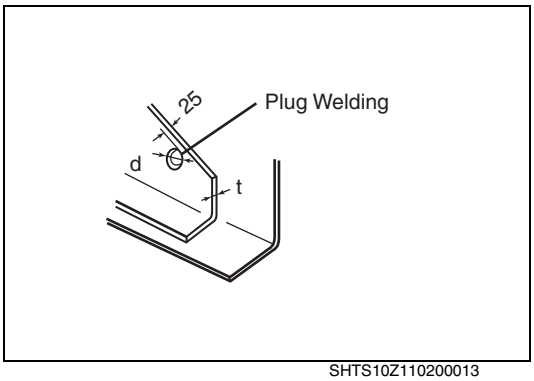


SHTS10Z110200013

(7) Diameter of plug welding hole.

**NOTICE**

**Prohibit plug welding on the flange.**

| t | dϕ |
|---|---|
| 3.2 | 15 |
| 4.5 | 15 |
| 6 | 18 |
| 8 | 18 |
| 10 | 18 |

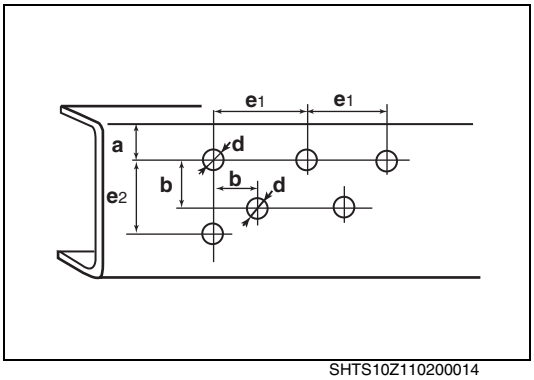


SHTS10Z110200014

(8) Interval of the holes

**a ≥50+d/2**
**b≥ 3d**
**e1e2≥701+a**
**dϕ: 18or less**

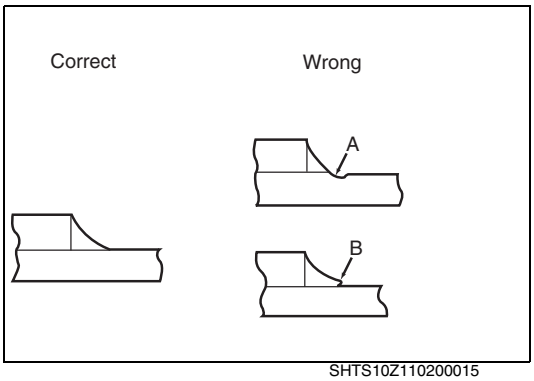


SHTS10Z110200015

(9) In welding, be sure that there is no undercut A or overlap B of the bead and pin hole.

**NOTICE**

**An experienced professional welder should always perform the welding since a poor welding job on the frame can cause damage.**

## WELDING CONDITION (WHEN WELDING ROD IS USED)

| | | Electric current (Unit: A) | | | | | |
|---|---|---|---|---|---|---|---|
| | Rod dia ϕ | 3.2 mm {0.126 in.} | | 4mm {0.157 in.} | | 5 mm {0.197 in.} | |
| | Welding position | Flat | Vertical overhead | Flat | Vertical overhead | Flat | Vertical overhead |
| Mechanical property of weld metal & rod | Weld Metal (Hot roll plate) Tensile strength; 621 MPa {63 kgf/mm$^2$, 89.6 lbf/in.$^2$} Welding Rod Tensile strength; 539 MPa {55 kgf/mm$^2$, 78.2 lbf/in.$^2$} Illuminate type (JIS D8016 AWS E8018) Coated electrode | 100-150 | 90-140 | 140-200 | 130-180 | 190-270 | — |
| | Weld Metal (Hot roll plate) Tensile strength; 539 MPa {55 kgf/mm$^2$, 78.228 lbf/in.$^2$} Welding Rod Tensile strength; 490 MPa {50 kgf/mm$^2$, 71.116 lbf/in.$^2$} Illuminate type (JIS D4301 AWS E6019) Coated electrode | 90-140 | 80-130 | 141-190 | 110-160 | 180-250 | — |

**NOTICE**

- **Diameter of welding rod ϕ3.2 mm {0.126 in.} or ϕ4 mm {0.157 in.} - plate thinner than 5 mm {0.197 in.}**
- **Diameter of welding rod ϕ4 mm {0.157 in.} or ϕ5 mm {0.197 in.} - plate thicker than 6 mm {0.236 in.}**

# CAB

CA02-001

**CAB ASSEMBLY ..... CA02-2**
DATA AND SPECIFICATIONS ..... CA02-2
TROUBLESHOOTING ..... CA02-3
DISMOUNTING AND MOUNTING ..... CA02-4
INSPECTION AND REPAIR ..... CA02-7

**HOOD ..... CA02-8**
COMPONENT LOCATOR ..... CA02-8
OVERHAUL ..... CA02-9
FRP REPAIR PROCEDURE ..... CA02-12

**RADIATOR GRILLE ..... CA02-17**
COMPONENT LOCATOR ..... CA02-17
OVERHAUL ..... CA02-18

**DOOR ..... CA02-19**
COMPONENT LOCATOR ..... CA02-19
OVERHAUL ..... CA02-20

**FLOOR MAT ..... CA02-23**
COMPONENT LOCATOR ..... CA02-23
DISMOUNTING AND MOUNTING ..... CA02-24

**SEAT ..... CA02-25**
COMPONENT LOCATOR ..... CA02-25

**INSTRUMENT PANEL ..... CA02-28**
COMPONENT LOCATOR ..... CA02-28
DISMOUNTING AND MOUNTING ..... CA02-29

**HEATER AND AIR CONDITIONER ..... CA02-30**
COMPONENT LOCATOR ..... CA02-30
SPECIAL TOOL ..... CA02-30

**AIR CONDITIONING SYSTEM ..... CA02-31**
SPECIFICATION DATA ..... CA02-31
PRECAUTIONS REGARDING REFRIGERANT (HFC134a) ..... CA02-31
PRECAUTIONS FOR REPLENISHING THE REFRIGERANT GAS ..... CA02-32
TROUBLESHOOTING (FAULT DIAGNOSIS BY SYMPTOMS) ..... CA02-33
GAS LEAKAGE INSPECTION ..... CA02-42
PRECAUTIONS FOR REMOVING/INSTALLING THE AIR CONDITIONER ..... CA02-45
RECOVERY AND REPLENISHMENT OF REFRIGERANT ..... CA02-47
MAINTENANCE ..... CA02-52
REPLACEMENT ..... CA02-53
DISMOUNTING AND MOUNTING ..... CA02-55

**WINDSHIELD ..... CA02-56**
COMPONENT LOCATOR ..... CA02-56
REPLACEMENT ..... CA02-57
AFFIXING WEATHERSTRIP PROCEDURE ..... CA02-58

**FRONT BUMPER ..... CA02-62**
COMPONENT LOCATOR ..... CA02-62

# CAB ASSEMBLY

## DATA AND SPECIFICATIONS

EN11Z0802I200001

**CAB**

| | Cabin | Engine hood |
|---|---|---|
| Type | All steel welded construction, safety glass fitted to all windows | Tilt hood, made of FRP. (SMC) |
| Tilt system | Less | Torsion bar |
| Tilt angle | — | 75° |

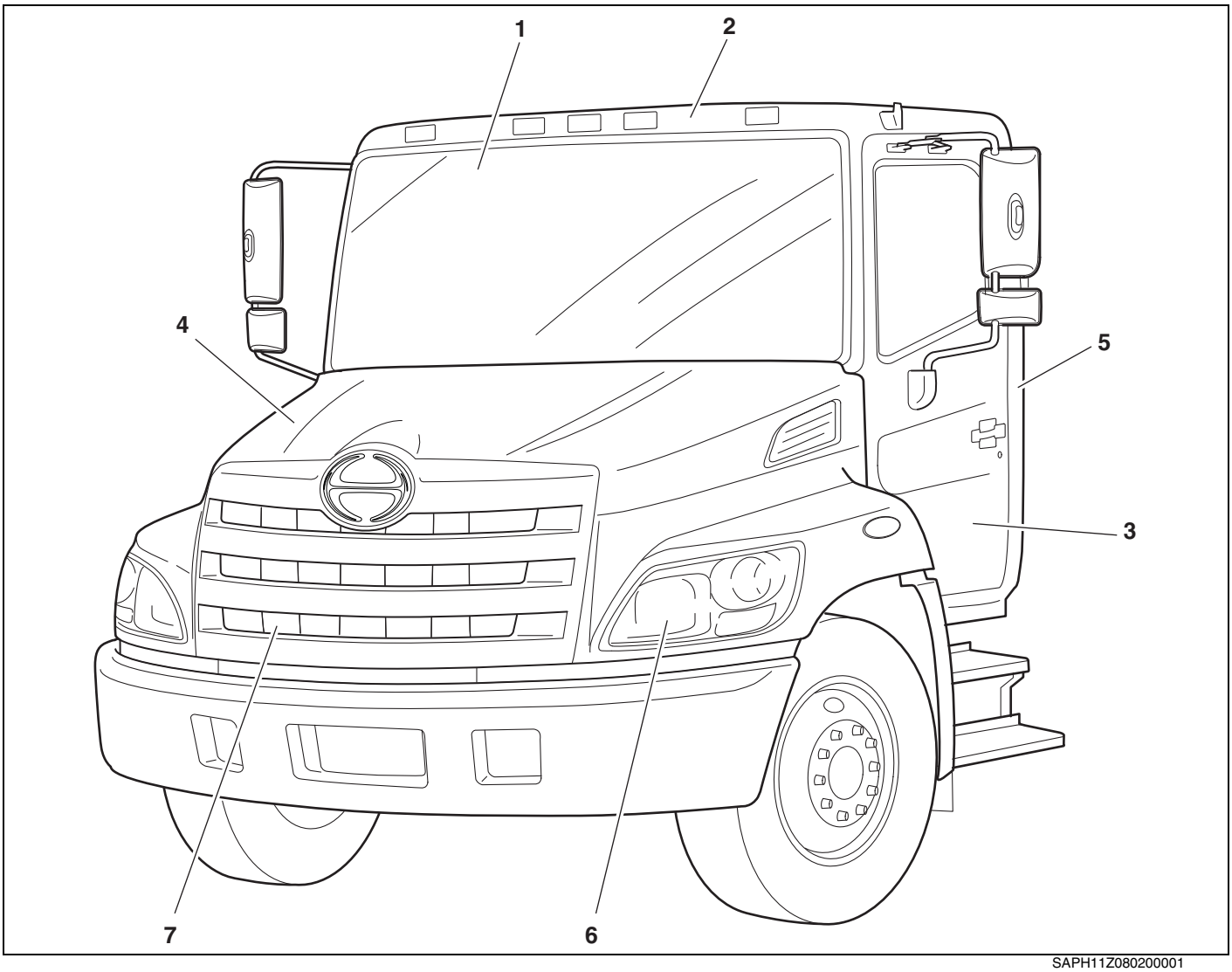


SAPH11Z080200001

| | | | |
|---|---|---|---|
| 1 | Windshield glass | 5 | Cab body |
| 2 | Roof | 6 | Head light |
| 3 | Door | 7 | Radiator grille |
| 4 | Hood | | |

# TROUBLESHOOTING

EN11Z0802F300001

## AIR SUSPENSION DUMP SYSTE

| Symptom | Possible cause | Action |
|---|---|---|
| **The vehicle height does not reach dump position** | Defective dump valve | Dump valve replacement |
| | Defective air suspension dump relay 3 — PKB SW (hydro-brake vehicles) | Wiring check |
| **The vehicle height does not return from dump position** | Defective air suspension dump relay 3 | Replacement of the air suspension dump relay 3 |
| **The vehicle height cannot be maintained** | Defective dump valve | Dump valve replacement |
| **The vehicle height does not change after return** | Defective air suspension dump relay | Replacement of the air suspension dump relay 3 |
| **The vehicle height returns from dump position when the starter switch is set to ON** | Defective ACC power supply — air suspension dump diode 2 | Replacement of air suspension diode 2, wiring check |
| | Defective IG power supply — air suspension dump diode 2 | Replacement of air suspension diode 2, wiring check |
| **Dump switch operation not effective** | Defective air suspension dump switch | Replacement of the air suspension dump switch |
| | Defective air suspension dump switch — dump valve wiring | Wiring check |
| | Defective IG power supply — air suspension dump relay 3 wiring | Wiring check |
| **Dump position possible even with parking brake OFF** | Defective air suspension dump relay 3 — air suspension dump relay 4 (full air brake vehicles) | Replacement of the air suspension dump relay 4, wiring check |
| **The meter indicator light does not light** | Defective IG power supply — indicator light — low-pressure switch | Meter replacement, wiring check |
| **The air suspension dump switch light does not light** | Defective IG power supply — air suspension dump switch lamp — low-pressure switch | Dump switch replacement, wiring check |

## HOOD TILT

| Symptom | Possible cause | Remedy/Prevention |
|---|---|---|
| **Hood does not tilt up.** | Hood mounting hook does not release. | Inspection of hood mounting hook. |
| | Oil damper does not release. | Inspection of oil damper mechanism. |
| | Damaged torsion bar | Replace torsion bar. |
| **Hood tilting is difficult.** | Tilt up force is weak. | Replace torsion bar. |
| **Hood does not lock to hood mounting member.** | Mounting hook does not operate. | Replace mounting hook. |
| | Hood mounting cushion is not correctly installed. | Correct installation of hood mounting. |

## DOOR

| Symptom | Possible cause | Remedy/Prevention |
|---|---|---|
| **Door does not close properly.** | Door is not adjusted | Adjust door installation. |
| | Striker is not adjusted | Adjustment of shim for door lock striker |
| | Damaged door lock | Replace door lock. |
| **Door does not lock by inside lock knob.** | Deformation of rod | Replace rod. |
| | Rod is disconnected | Connect rod. |
| | Damaged door lock | Replace door lock. |
| **Door does not lock by key.** | Rod is disconnected | Connect rod. |
| | Damaged door lock | Replace door lock. |
| | Damaged lock cylinder | Replace lock cylinder. |
| **Door does not open by outside handle.** | Outside handle push rod is not adjusted. | Adjust push rod. |
| | Damaged door lock | Replace door lock. |
| **Door does not open by inside handle.** | Inside handle is not installed properly. | Install inside handle properly. |
| | Deformation of rod | Replace rod. |
| | Rod is disconnected. | Connect rod. |
| | Damaged door lock | Replace door lock. |
| **Inside handle does not return to its normal position.** | Interference between rods. | Replace rod. |
| | Inside handle is not installed properly. | Adjust inside handle. |
| | Return spring is damaged. | Replace inside handle. |
| **Door window goes down while driving.** | Window is not in the glass holder. | Repair. |
| | Regulator is damaged. | Replace regulator. |
| **Regulator makes abnormal noise while driving.** | Window sill weather strip is installed improperly. | Install properly or replace clips. |

## BLOWER

| Symptom | Possible cause | Remedy/Prevention |
|---|---|---|
| **Malfunction of blower when power is ON.** | Blown fuse | Change fuse or check for short circuit. |
| | Malfunction in heater relay | Inspect relay. |
| | Malfunction of heater blower switch | Inspect power switch. |
| | Malfunction of register | Check register. |
| | Blower motor malfunction | Replace motor. |
| | Damaged electrical wiring or poor grounding | Repair as necessary. |

# DISMOUNTING AND MOUNTING

EN11Z0802H100001

**1. BEFORE DISMOUNTING THE CAB**

(1) Be sure to block the front wheels.
(2) Disconnect the battery cable from the battery ground terminal.
(3) Tilt the engine hood.
(4) Drain engine coolant, clutch fluid, brake fluid and refrigerant of the air conditioner.

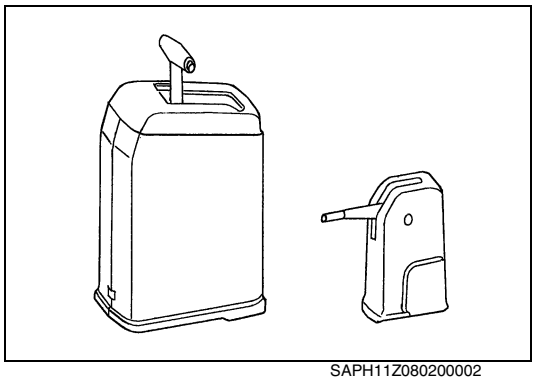

SAPH11Z080200002

## 2. CAB INSIDE

(1) Hydro brake model: Remove the box of parking brake control lever and remove the cable retainer spring and pin.

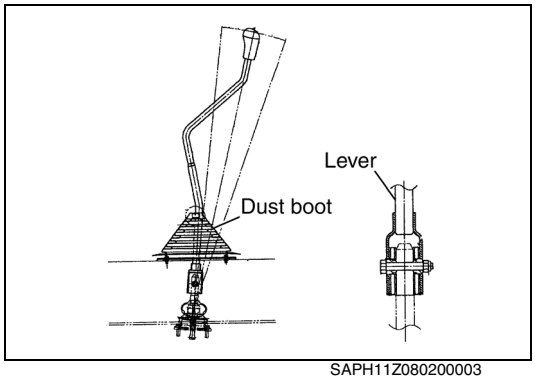


SAPH11Z080200003

(2) Manual transmission: Remove the transmission control lever assembly with dust boot.
ALLISON auto-transmission: Remove the cover and cable of the auto-transmission control assembly.

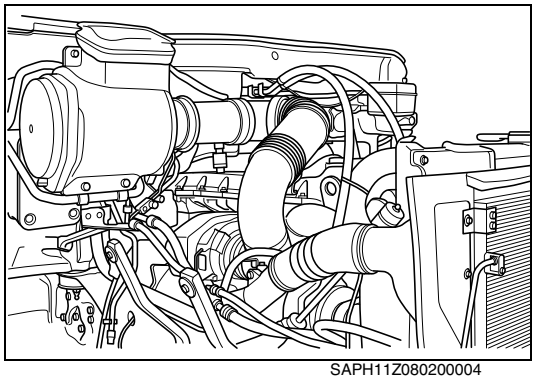

SAPH11Z080200004

## 3. CAB FRONT SIDE

(1) Remove the heater hose, pipe for air conditioner, air cleaner and bracket.

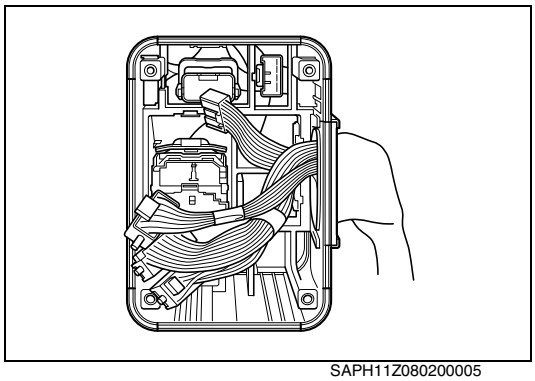

SAPH11Z080200005

(2) Remove the cab-chassis harness box lid and disconnect all the connectors of the harness connected to the cab and chassis.

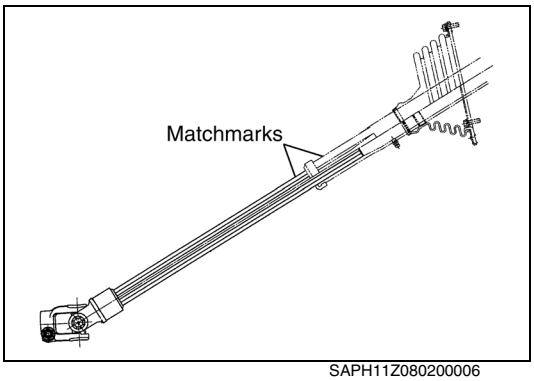

SAPH11Z080200006

(3) Disconnect the steering shaft
Make alignment marks on both the steering shaft and shaft spline. Then remove the tightening nut and disconnect the shaft yoke from the steering gear assembly.

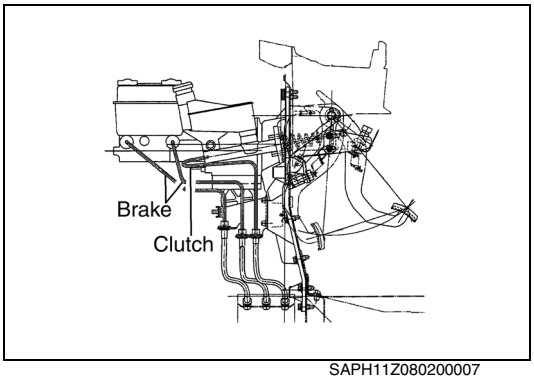

SAPH11Z080200007

(4) Hydro brake, manual transmission:
Disconnect the brake pipe from the Hydro Max and the clutch pipe from the master cylinder. Disconnect its hose.
Hydro brake, automatic transmission:
Disconnect the brake pipe from the Hydro Max and disconnect its hose.
Full air brake, manual transmission:
Disconnect the brake tube from the brake valve and the spring brake control valve. Disconnect the clutch pipe from the master cylinder.
Full air brake, automatic transmission and UltraShift transmission:
Disconnect the brake tube from the brake valve and the spring brake control valve.

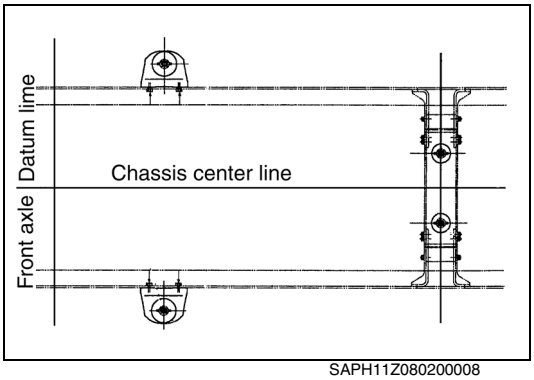

SAPH11Z080200008

**4. DISMOUNT CAB**

(1) Remove the mounting rubber nuts. (4 places)

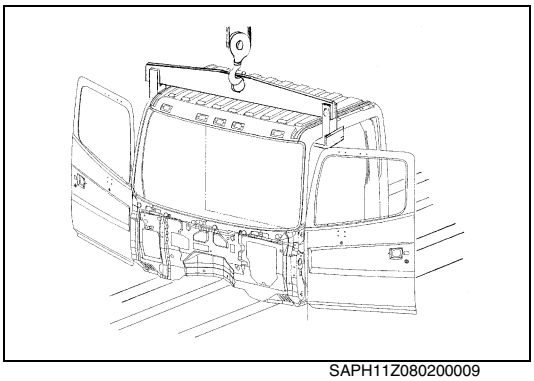
SAPH11Z080200009

(2) Using a crane or hoist, bring the cab lifting device to slight tension.
(3) Lift the cab and set the cab on a cab stand.

**⚠ WARNING**
**Never go under the cab while lifting or suspending the cab.**

**5. MOUNT CAB**

**HINT**
**Mounting takes place in the reverse order of dismounting, so please pay attention to the following points.**

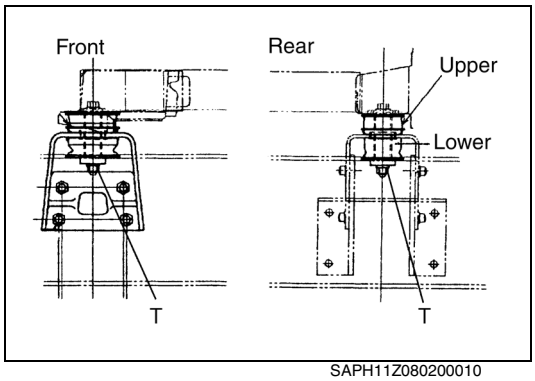

SAPH11Z080200010

(1) Discrimination of the mounting rubber.

| Model | Front Mounting | | Rear Mounting | |
|---|---|---|---|---|
| | Upper | Lower | Upper | Lower |
| HINO 23, 25, 26, 33, 35 (NE, NJ, NF, NV, NH) | Blue ϕ10-1 | ← ϕ10-2 | Yellow ϕ10-1 | ← ϕ10-2 |

**Nut Tightening Torque:**
**T = 213-227 N·m {2,173-2,316 kgf·cm, 157-167 lbf·ft}**

(2) Connect the pipes to the brake valve and the clutch master cylinder.

- Tighten flare nuts and tapered joints to the specified tightening torque shown below.

| Pipe or joint diameter | | Flare Nut | Tapered joint | | |
|---|---|---|---|---|---|
| | | ϕ6.35 mm | 1/4 in. | 3/8 in. | 1/2 in. |
| Tightening Torque | N·m | 20-30 | 20-30 | 29-39 | 39-49 |
| | kgf·cm | 204-306 | 204-306 | 296-398 | 398-500 |
| | lbf·ft | 15-22 | 15-22 | 21-29 | 29-36 |
| Material | | Steel pipe | Aluminum Copper | | |

(3) Connect the steering shaft.
The steering shaft should be aligned to the marks.

# INSPECTION AND REPAIR

EN11Z0802H100002

| Inspection item | Standard | Limit | Remedy | Inspection procedure |
|---|---|---|---|---|
| Check the mounting rubber for deformation. | — | — | Replace, if necessary. | Visual check 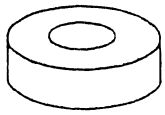 |
| Check the cab for damage and crack. | — | — | Repair or Replace, if necessary. | Visual check 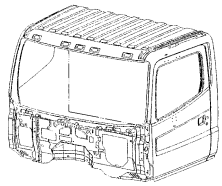 |

# HOOD

## COMPONENT LOCATOR

EN11Z0802D100001

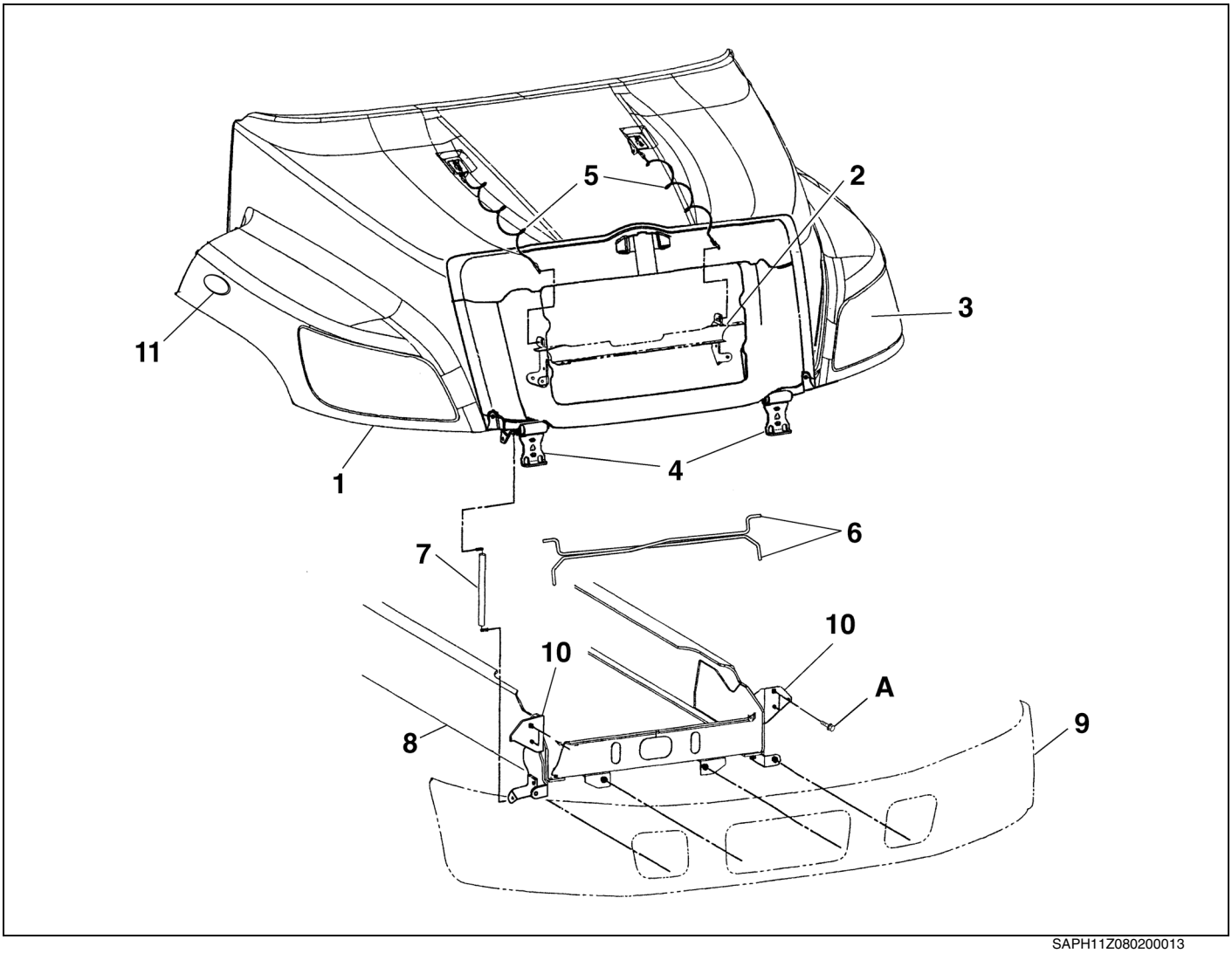


SAPH11Z080200013

| | | | |
|---|---|---|---|
| 1 | Hood | 7 | Oil damper |
| 2 | Radiator | 8 | Chassis frame |
| 3 | Head light, Front turn light | 9 | Front bumper |
| 4 | Hinge | 10 | Hinge sub assembly |
| 5 | Stopper wire | 11 | Side turn light |
| 6 | Torsion bar | | |

**Tightening torque** **Unit: N·m {kgf·cm, lbf·ft}**

| | | |
|---|---|---|
| A | 34.5-51.5 {352-526, 25-38} | |

# OVERHAUL

EN11Z0802H200001

**1. BEFORE DISMOUNTING THE HOOD**

(1) Be sure to block the front wheels.

**2. REMOVE BUMPER FROM CHASSIS FRAME**

**3. TILT HOOD**

**4. REMOVE OIL DAMPER**

(1) While complete opening the hood, remove the upper and lower nuts from the ball joints of the oil damper.

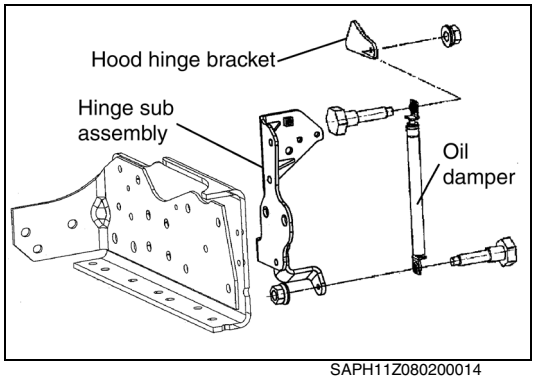


SAPH11Z080200014

**5. SUPPORT THE HOOD**

- By supporting the hood using a crane or hoist, adjust the hood tilt angle so that the torsion bar is free.
  Refer to page CA02-11 for illustration.

**⚠ WARNING**

**Never go under the hood without supporting the hood with a crane or hoist otherwise the hood could come down and cause severe personal injury.**

**⚠ CAUTION**

**When hoisting the hood, be careful of deformation of the hood.**

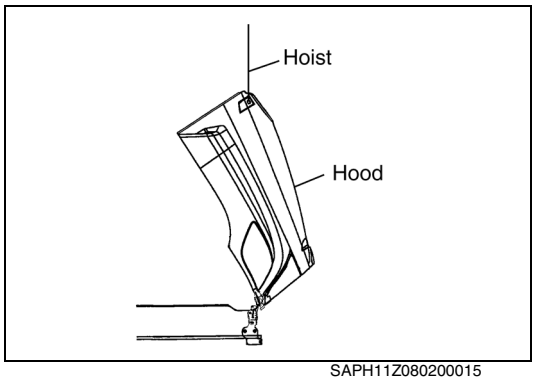


SAPH11Z080200015

**6. REMOVE TORSION BAR**

(1) Remove the two torsion bars.

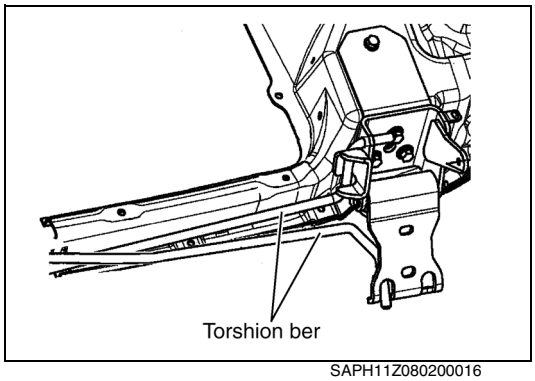


SAPH11Z080200016

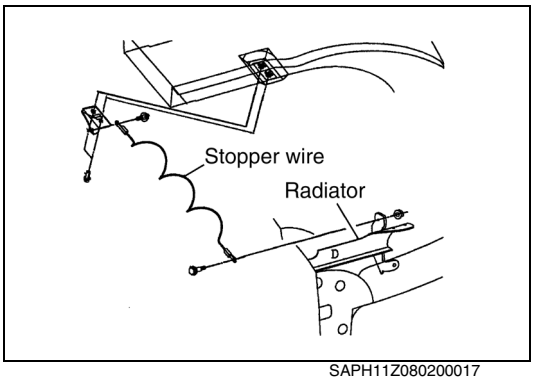

SAPH11Z080200017

**7. REMOVE STOPPER WIRE**

(1) Using a crane or hoist, hold the hood before removing the stopper wire.

(2) Remove the bolts and nuts from the stopper wire.

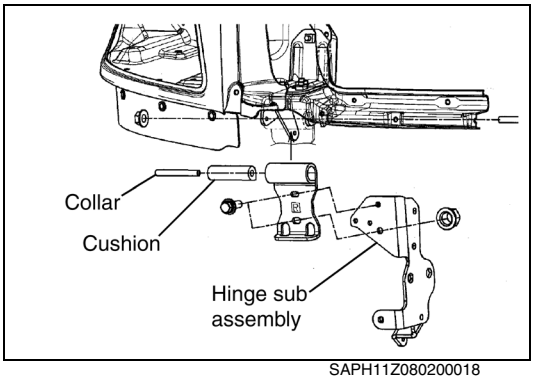

SAPH11Z080200018

**8. REMOVE HINGE**

(1) Remove the flange bolts and nuts from the hinge sub assembly on the chassis frame.

**9. INSTALL HOOD**

**HINT**

**Installation takes place in the reverse order of the removal. Please pay attention to the following points.**

(1) Using a crane or hoist, support the hood.
(2) Match the hole of hinge and hinge sub assembly.
Tighten the flange bolts and nuts.
(3) Install the stopper wire between the hood bracket and the radiator frame.
(4) Install the torsion bar.

**NOTICE**

**Torsion bar should be inserted perfectly to the holes and the clamping brackets.**

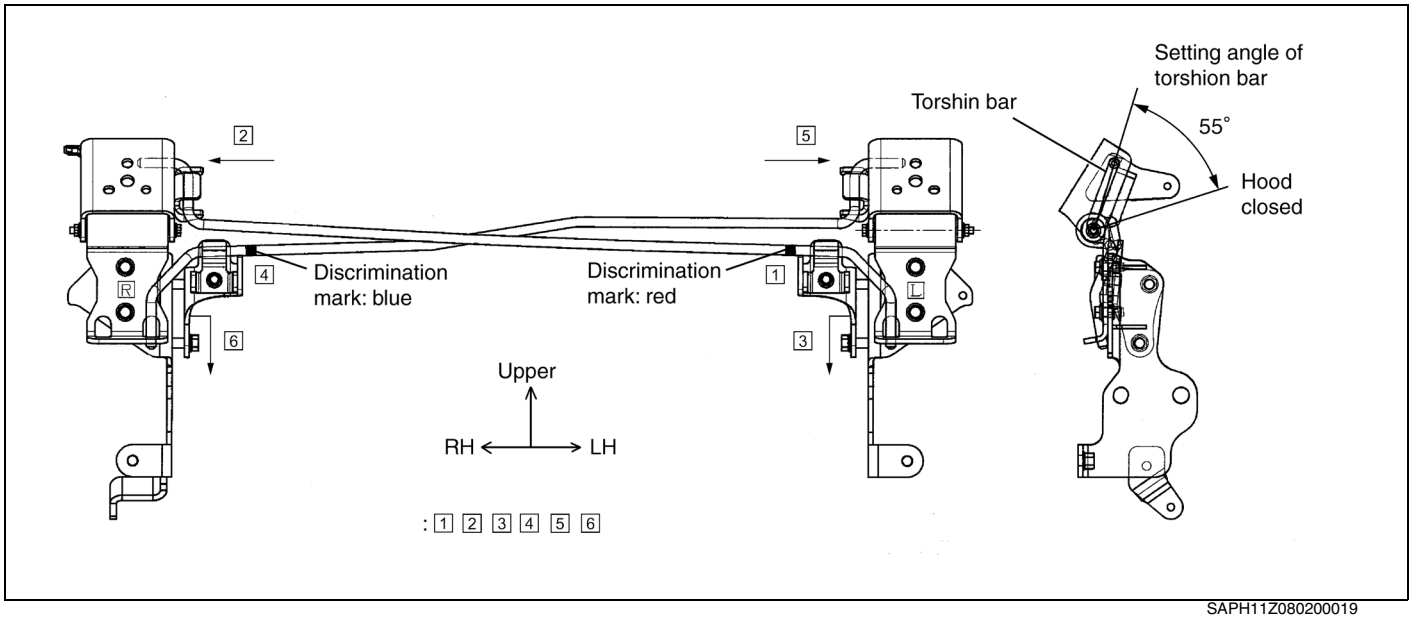


SAPH11Z080200019

(5) Install the oil damper.

# FRP REPAIR PROCEDURE

EN11Z0802H200002

## 1. REPAIR MATERIAL

| Material | Main composition | Note |
|---|---|---|
| a. Polyester resin | Unsaturated polyester | |
| b. Hardener for polyester | Methyl ethyl ketone | |
| c. Glass mat | Peroxyacid | |
| d. Acetone | Acetone | |
| e. Putty | Unsaturated polyester | |
| f. Putty hardener | Methyl ethyl ketone<br>Peroxyacid | |
| g. Compound (rubbed finely) | | |
| h. Waxes (twinkle) | | |
| i. Masking tape | | Adhesive tape (18 mm wide) |
| j. Waste paper | | |
| k. Rag | | White knit goods |
| l. Sandpaper | | #240, 360, 800 |

## 2. PRECAUTION (except i., j., k., l.)

(1) Keep flames and sparks away from work area as repair materials are highly flammable.
(2) Keep repair materials in a tightly covered container and well ventilated place out of direct sunlight.
(3) Label the container containing the hazardous material.
(4) After the procedure, clean at once your hands, fingers, tools etc. using acetone.
(5) Mix the hardener properly;
Polyester resin: Hardener: 1%—3%
Putty: Hardener: 1%—3%
(6) While preparing repair materials, prevent contamination of mixture by foreign substances, in particular water or metal compounds.
(7) Dispose of solvent and resin wisely in accordance with Environmental and Safety Regulations.

### 3. MAIN TOOLS

| Tool | Form | Use |
|---|---|---|
| Hand grinder (or disc sander) | 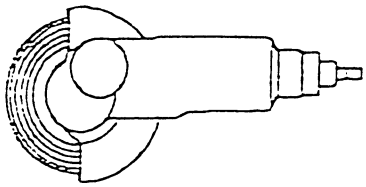 | for wide grinding or cutting |
| Hand router | 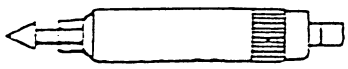 | for V–groove cutting or small grinding |
| Spray gun | 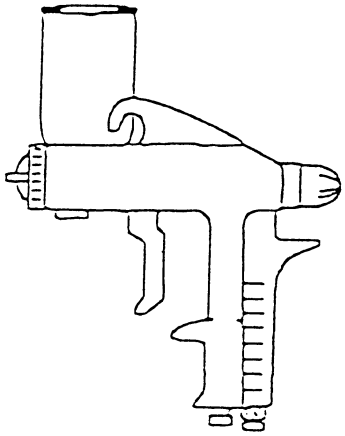 | to spray repair paint |
| Polyethylene vessel | 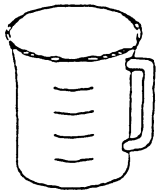 | to mix resin and hardener or compound paints (2 pcs) |
| Scissors (or cutter) | — | for cutting glass mat |
| Infrared light | — | for heating repair part |
| Putty knife | 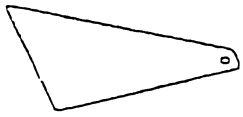 | for applying putty |
| Brush | — | for impregnating resin |
| Rubber gloves | — | anti-solvent type |
| Patch rubber | — | flatten |

**4. REPAIR METHOD**

(1) Possible Repair Area

a. Resin crack or paint damage can be repaired if area is less than 60 mm (2.4 in.) in length.

b. A broken edge or cracked corner more than 10 $mm^2$ (0.016 $in.^2$) cannot be repaired.

c. In the case where there are many areas to repair, it must be decided whether repair work is required or not.

**NOTICE**

**A cracked or broken area on the hood which is located at a major stress point, which requires frequent repairing due to strength (in particular the circumference of hole) and area size, needs to be replaced.**

(2) Repair method.

| Symptom | Repair method | Note |
|---|---|---|
| (1) Scratch or crack on the surface | a) Grind around damage.<br>  <br>• Sandpaper #120-#400<br>• Grind lightly (Create a small area as possible around the damage) | This purpose is to flatten around the damage and to increase fitting of the putty. |
| | b) Apply putty<br>Compound the resin and hardener sufficiently.<br> 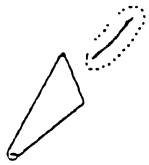 <br>• Press putty strongly into the crack with putty knife.<br>• Apply putty in grinding area. | Apply putty with small convex. |
| | c) Dry the putty<br>Using an infrared light, dry the putty to harden perfectly under 80°C (177°F). | In case of incomplete drying, putty peels off while grinding. |
| | d) Grinding<br>Using sandpaper (#400-#1000), grind lightly on the putty.<br>e) Painting/coating<br>Apply touch-up coat onto a repaired area. | Apply sandpaper to uneven areas. |
| | f) Finishing<br>Using compound etc. finish up buffing. | |

| Symptom | Repair method | Note |
|---|---|---|
| (2) Scratch or crack on the surface | a) Back side grinding<br>Using a hand grinder or router, grind the back side of the crack.<br> 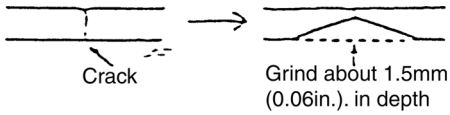 <br> | Grind area as small as possible |
| (Overlay on the back side.) | b) Overlay<br>Cut two glass mats larger than grinding area, impregnate perfectly with polyester resin and place it on the repair area without a wrinkle and air bubble.<br> 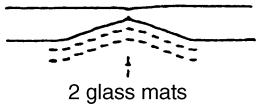 <br> | Mix hardener perfectly.<br>Clean the repair place using acetone before overlaying. |
| | c) Dry resin<br>Refer to (1)-c). | In case of improper drying, putty peels off while sanding. |
| | d) Grinding<br>Grind using hand grinder or router and then sandpaper #120 to #400. | Use patch rubber to flatten repair area. |
| | e) If there is a pinhole or air bubble, apply methods (1)-b) to -d). | Grind using #400 sandpaper. |
| | f) V-groove cutting on the front side<br>Using a hand router, cut a V-groove on the front side.<br> 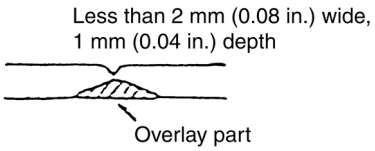 <br> | |
| | g) Finish on the front side<br>Apply methods (1)-a) to f). | |

| Symptom | Repair method | Note |
|---|---|---|
| (3) Broken resin<br><br>(Overlay from back side.) | a) Grind back side<br>Grind back side using hand grinder or router.<br> 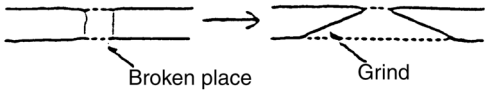 <br> | |
| | b) Overlay<br>Refer to (2)-b) but use 4 sheets of glass mats. Apply masking tape in order that resin does not flow to front surface while overlaying.<br> 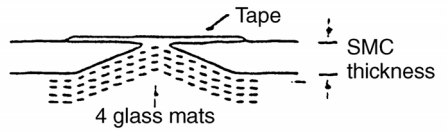 <br> | |
| | c) Apply methods (2)-c) to -d). | |
| | d) Apply methods (1)-a) to -f). | |

# RADIATOR GRILLE

## COMPONENT LOCATOR

EN11Z0802D100002

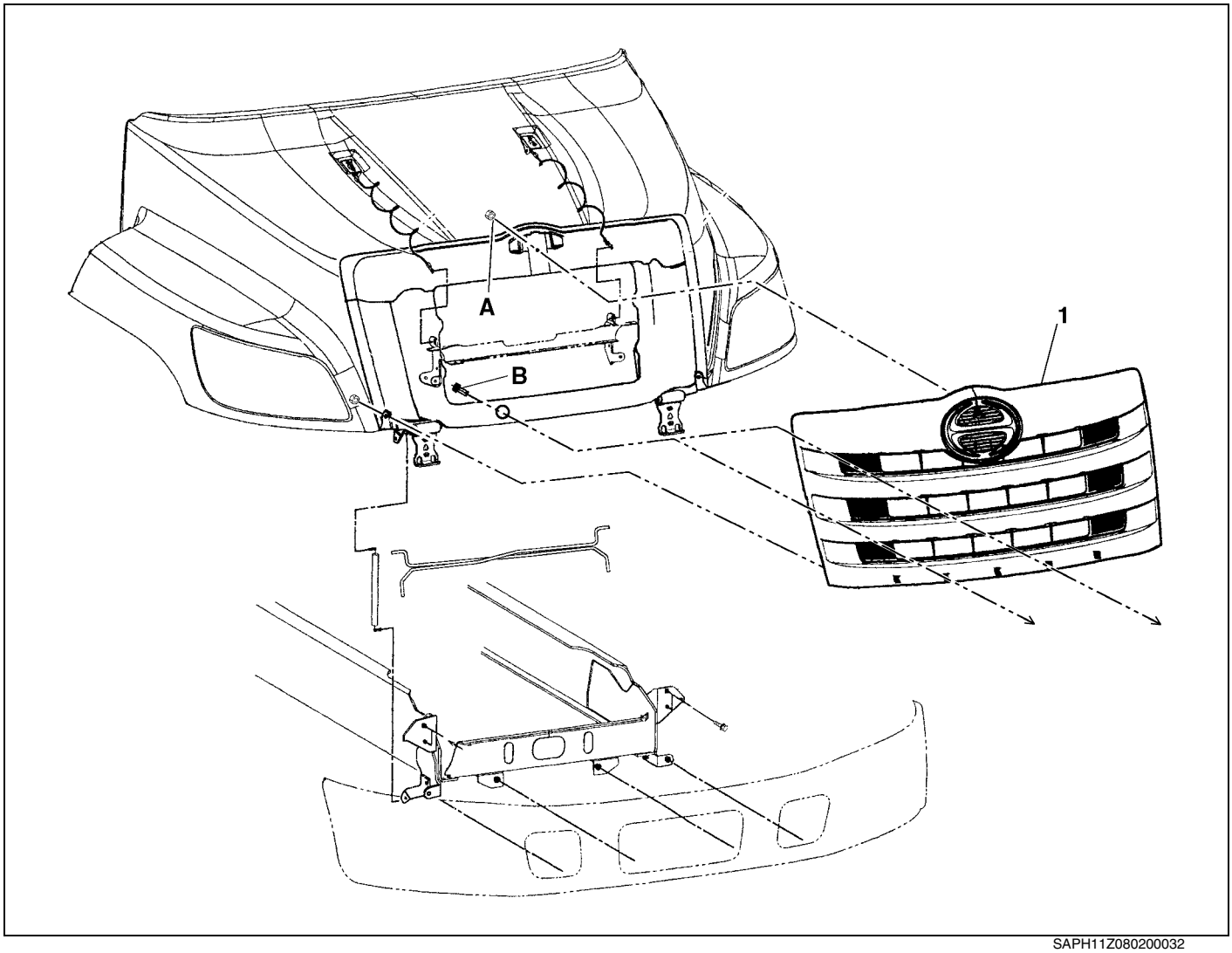


SAPH11Z080200032

| | |
|---|---|
| 1 Radiator grille | |

**Tightening torque** **Unit: N·m {kgf·cm, lbf·ft}**

| | |
|---|---|
| A 5.5-7.0 {56-71, 4.1-5.2} | B 5.5-7.0 {56-71, 4.1-5.2} |

# OVERHAUL

EN11Z0802H200003

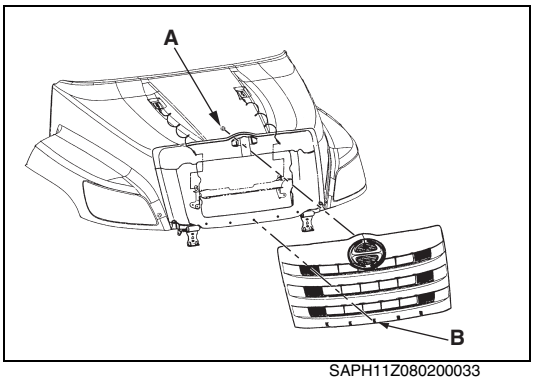

SAPH11Z080200033

**1. REMOVE RADIATOR GRILLE**

(1) After loosening the nuts (11 locations) and the bolts (2 locations) from behind the radiator grille paying attention not to impact on them, remove the resin clips (3 locations) and remove it from the radiator grille hood.

**2. INSTALL RADIATOR GRILLE**

(1) Replace the dry lock fixing bolts and resin clips with new ones.

(2) Fasten the clip at (B) the center lower and nut at (A) the center upper , and then fasten other bolts, nuts and clips.

**HINT**

**Thread lock cures about 24 hours after fastening.**

**Tightening Torque:**
**5.5-7.0 N·m {56-71 kgf·cm, 4.1-5.2 lbf·ft}**

# DOOR

## COMPONENT LOCATOR

EN11Z0802D100003

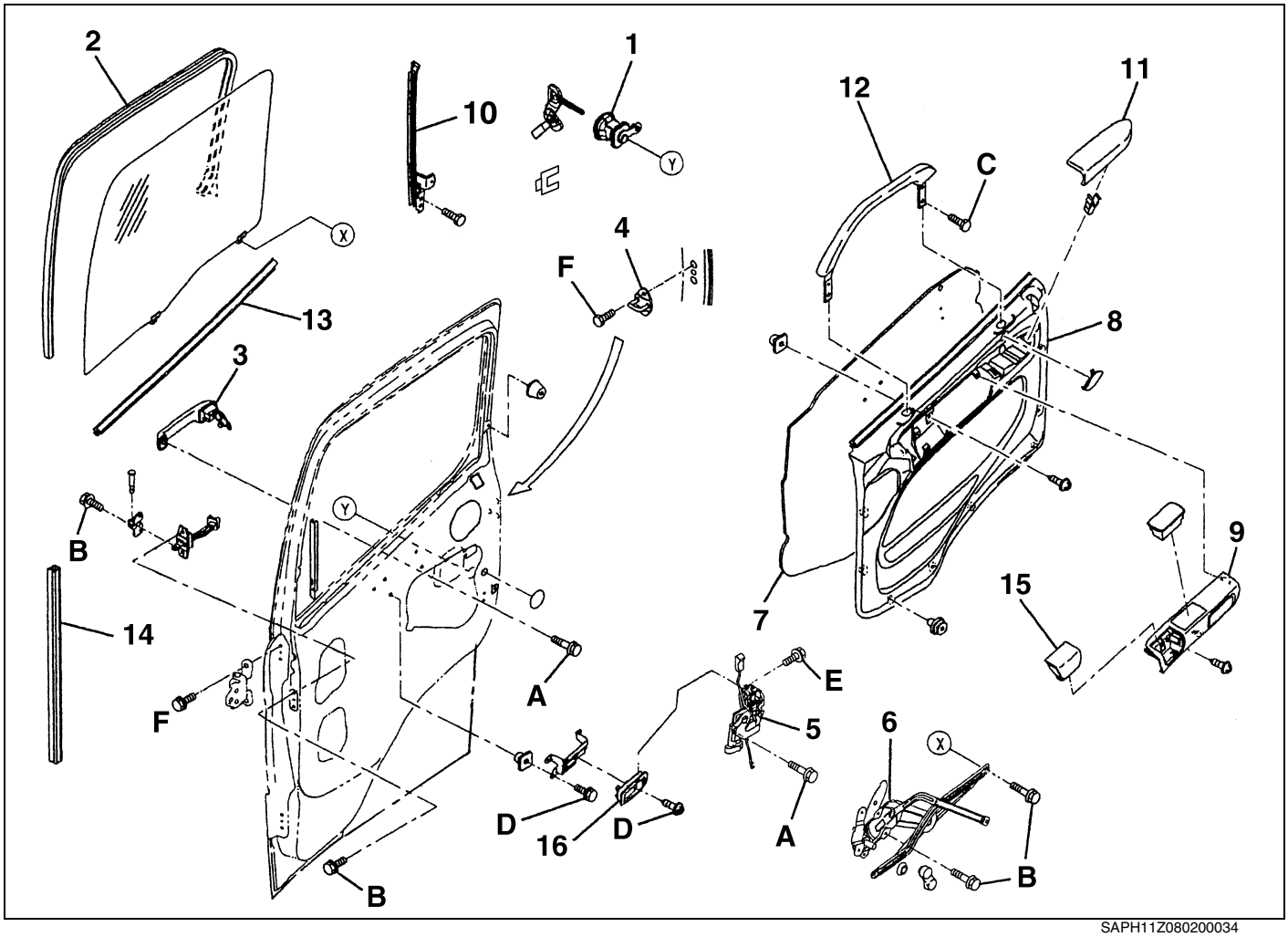


SAPH11Z080200034

| | | | |
|---|---|---|---|
| 1 | Lock cylinder | 9 | Inside upper trim |
| 2 | Weather strip | 10 | Door frame |
| 3 | Outside handle | 11 | Armrest |
| 4 | Striker | 12 | Door assist grip |
| 5 | Door lock | 13 | Outer oscillate-proof |
| 6 | Regulator | 14 | Glass run weather strip |
| 7 | Inside hole cover | 15 | Ashtray (driver side only) |
| 8 | Inside trim | 16 | Inside handle |

**Tightening torque** **Unit: N·m {kgf·cm, lbf·ft}**

| | | | |
|---|---|---|---|
| A | 5.5 {56, 4.1} | D | 2.5 {25, 1.8} |
| B | 9 {92, 6.6} | E | 9 {92, 6.6} |
| C | 10.8-20.2 {110-206, 8.0-14.8} | F | 22 {224, 16} |

# OVERHAUL

EN11Z0802H200004

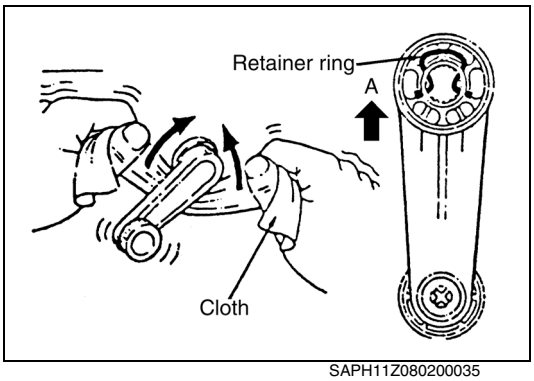

SAPH11Z080200035

**1. REMOVE REGULATOR HANDLE. (Without power window)**

(1) Use a piece of cloth to catch the two ends of the retainer ring and pull the cloth back and forth as shown, to remove the ring.

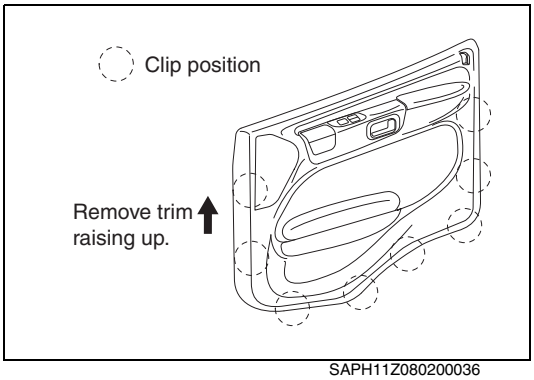

SAPH11Z080200036

**2. REMOVE INSIDE TRIM.**

(1) Remove the parts listed below.
(Refer to the DOOR COMPONENT LOCATOR)
   a. Ashtray
   b. Armrest
   c. Inside upper trim
   d. Inside handle
   e. Door assist grip

(2) Pull off the inside trim.

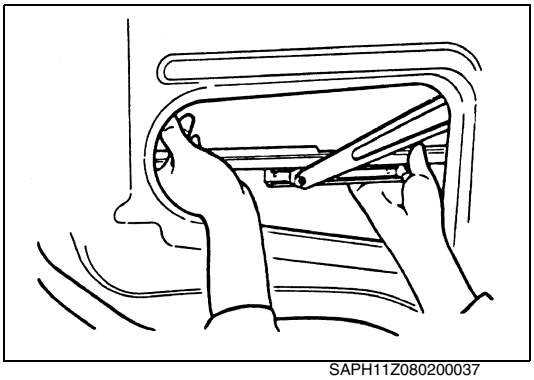
SAPH11Z080200037

**3. REMOVE WINDOW.**

(1) Disconnect regulator from window channel.

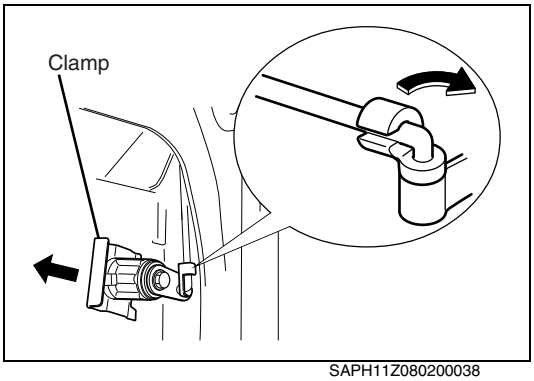

SAPH11Z080200038

**4. REMOVE DOOR LOCK.**

(1) Disconnect the lock cylinder from the door lock.
(2) Remove the lock cylinder.
(3) Remove the door lock with rods.

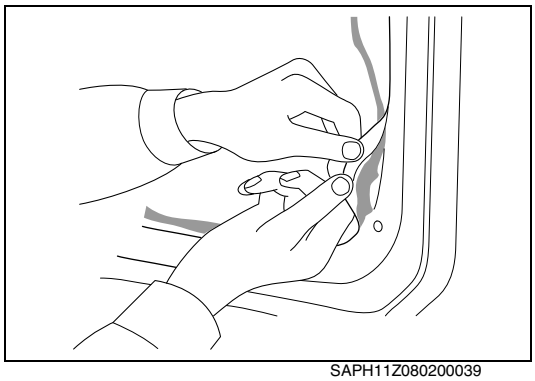
SAPH11Z080200039

**5. SERVICE HOLE COVER AND REGULATOR INSTALLING**

(1) Stick butyl rubber tape along lower tangent line of the drain hole of the door.

(2) Insert the regulator handle with retainer ring into the regulator.

**6. DOOR HINGE ADJUSTMENT**

(1) Tilt the hood.

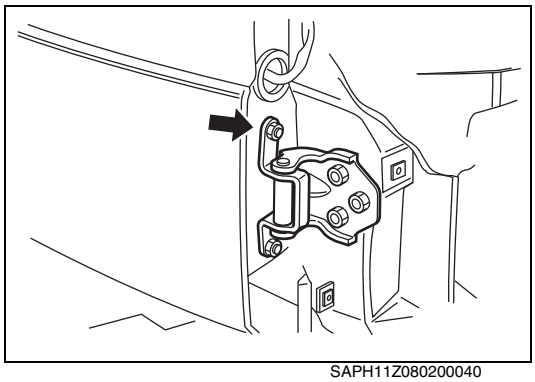
SAPH11Z080200040

(2) Make vertical and horizontal adjustments by loosening the hinge bolts on the door.

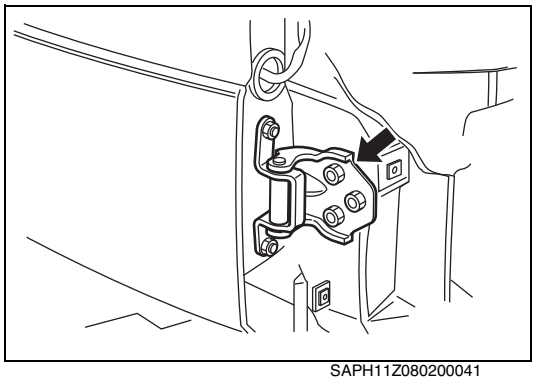
SAPH11Z080200041

(3) Make depth adjustments by loosening the hinge bolts on the body.

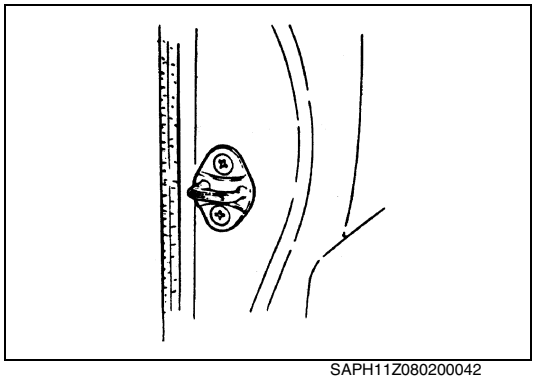
SAPH11Z080200042

**7. STRIKER ADJUSTMENT**

(1) Check the engagement between the door lock and the striker. Make the top and bottom contact even.

(2) Perform adjustment so that the outside of the door and the outside of the rear quarter panel are flush with each other. After adjustment, properly tighten the bolts.

**NOTICE**

**When adjusting the door in the vertical direction, do not force into alignment by using the door lock striker.**

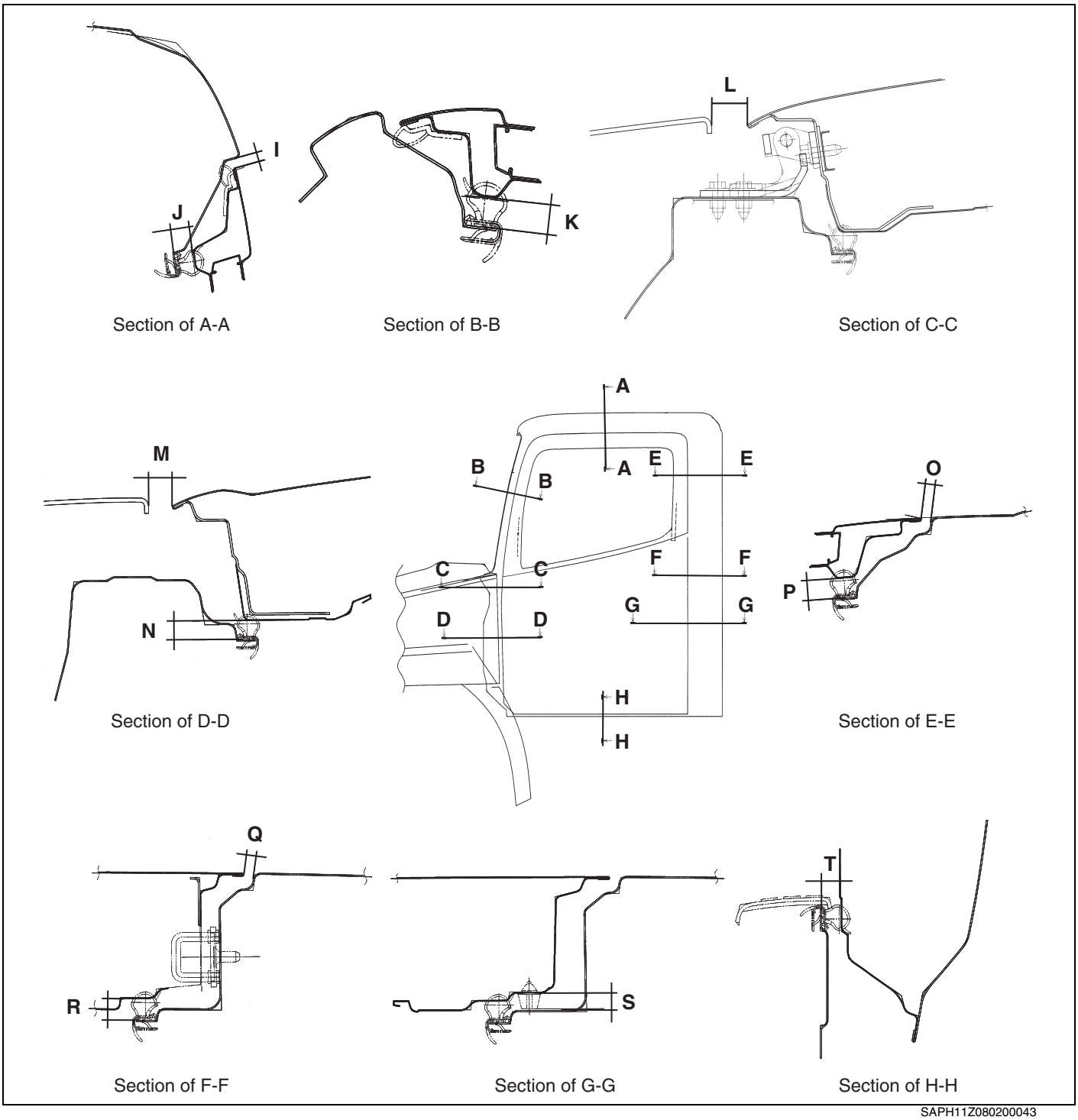


SAPH11Z080200043

**CLEARANCES BETWEEN BODY AND DOOR** **Unit: mm {in.}**

| | | | |
|---|---|---|---|
| **I** | **5.8-8.8 {0.23-0.35}** | **O** | **5.8-8.8 {0.23-0.35}** |
| **J** | **12.5-16.5 {0.50-0.64}** | **P** | **13.7-17.7 {0.54-0.69}** |
| **K** | **12.5-16.5 {0.50-0.64}** | **Q** | **5.8-8.8 {0.23-0.35}** |
| **L** | **27.4 {1.08}** | **R** | **14.6-18.6 {0.57-0.73}** |
| **M** | **17.3-23.3 {0.68-0.92}** | **S** | **11.8-14.8 {0.46-0.58}** |
| **N** | **14.4-18.4 {0.57-0.72}** | **T** | **12.7-16.7 {0.50-0.65}** |

# FLOOR MAT

## COMPONENT LOCATOR

EN11Z0802D100004

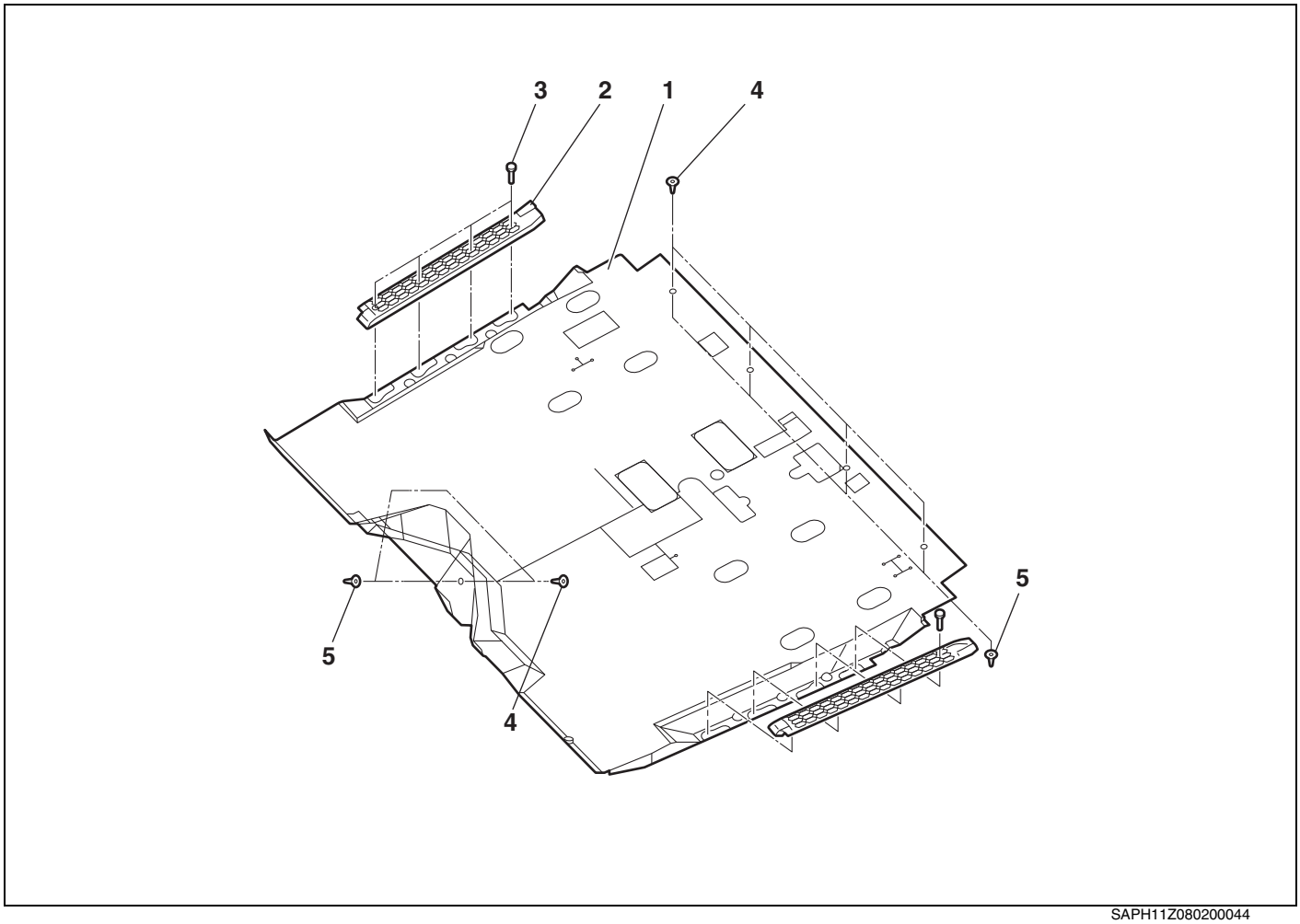


SAPH11Z080200044

| | | | |
|---|---|---|---|
| 1 | Floor mat | 4 | Retainer A |
| 2 | Scuff plate | 5 | Retainer B |
| 3 | Bolt | | |

# DISMOUNTING AND MOUNTING

EN11Z0802D100005

**1. DISMOUNTING FLOOR MAT**

(1) Remove the scuff plat.
(2) Remove the floor mat.

**2. MACHINING METHOD (IN THE CASE OF MANUAL TRANSMISSION VEHICLE)**

(1) How to drill the manual transmission hole.
Cut off the part along the line mark (embossed line) on the product surface with scissors.
(2) How to attach the felt.
Affix the felt to the marked (shaded) area below by using double-sided tape.

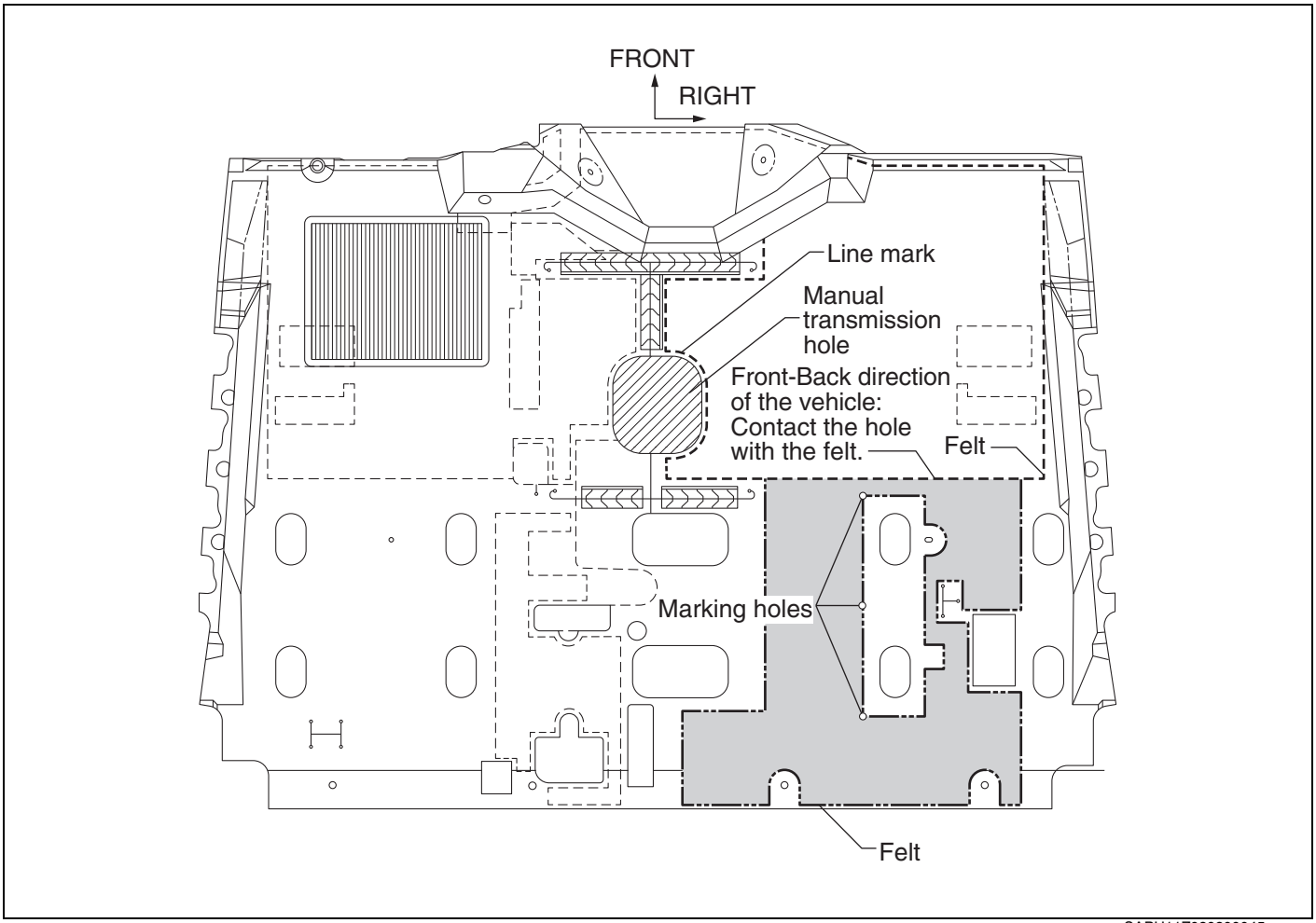


SAPH11Z080200045

**3. MOUNTING FLOOR MAT**

(1) Install the floor mat.
(2) Install the scuff plat.

# SEAT

## COMPONENT LOCATOR

EN11Z0802D100006

### DRIVER'S SEAT

**Suspension type (Air suspension)**

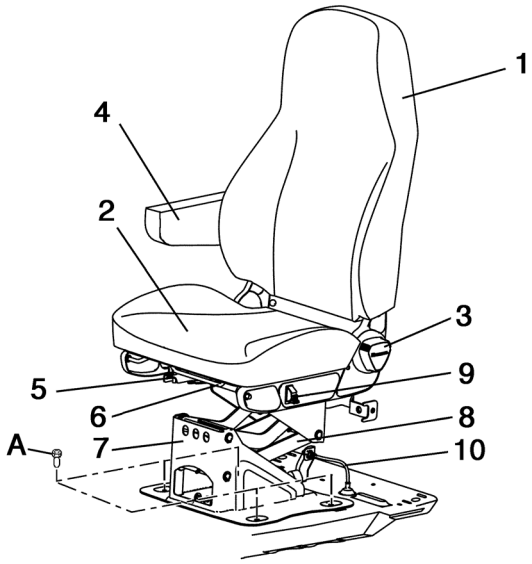


SAPH11Z080200046

| | | | |
|---|---|---|---|
| 1 | Seat back | 6 | Cushion adjuster |
| 2 | Seat cushion | 7 | Seat leg |
| 3 | Reclining knob | 8 | Seat suspension |
| 4 | Arm rest | 9 | Height adjuster switch |
| 5 | Seat adjuster | 10 | Air tube |

**Tightening torque** **Unit: N·m {kgf·cm, lbf·ft}**

| | |
|---|---|
| A 17.5-32.5 {179-331, 13-23} | |

## ASSISTANT'S SEAT

**Bench type**

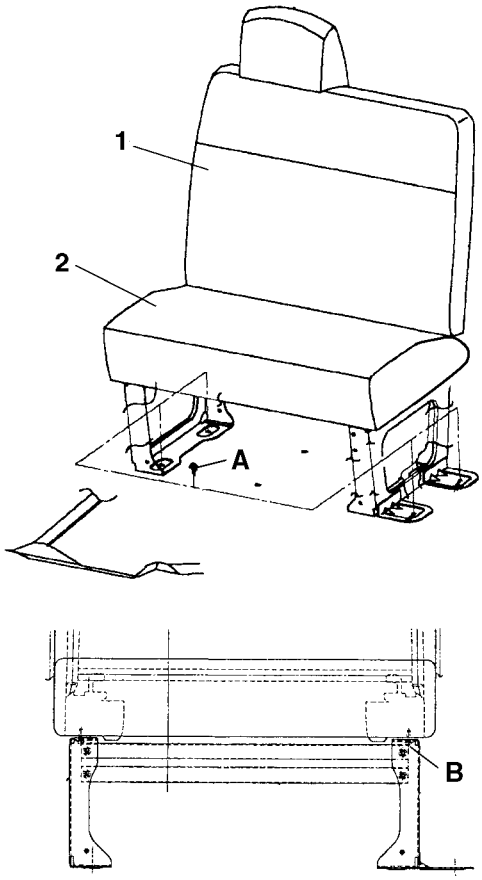


**Separate type**

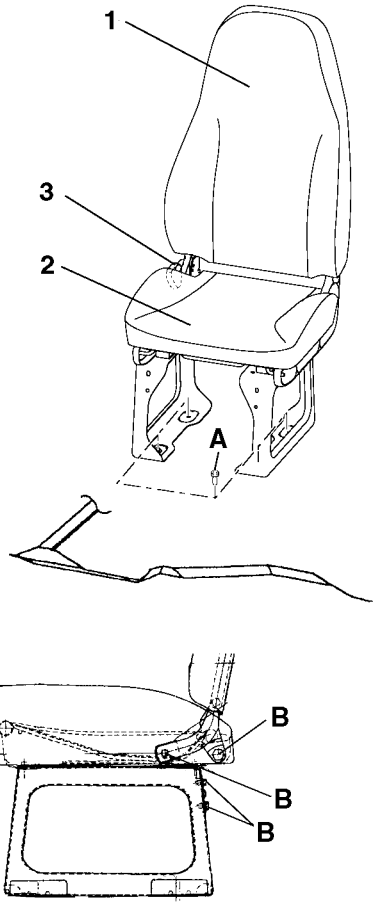


SAPH11Z080200047

| | | | |
|---|---|---|---|
| 1 | Seat back | 3 | Reclining knob |
| 2 | Seat cushion | | |

**Tightening torque** **Unit: N·m {kgf·cm, lbf·ft}**

| | | | |
|---|---|---|---|
| A | 17.5-32.5 {179-331, 13-23} | B | 29.8-38 {304-388, 22-28} |

## SEAT BELT

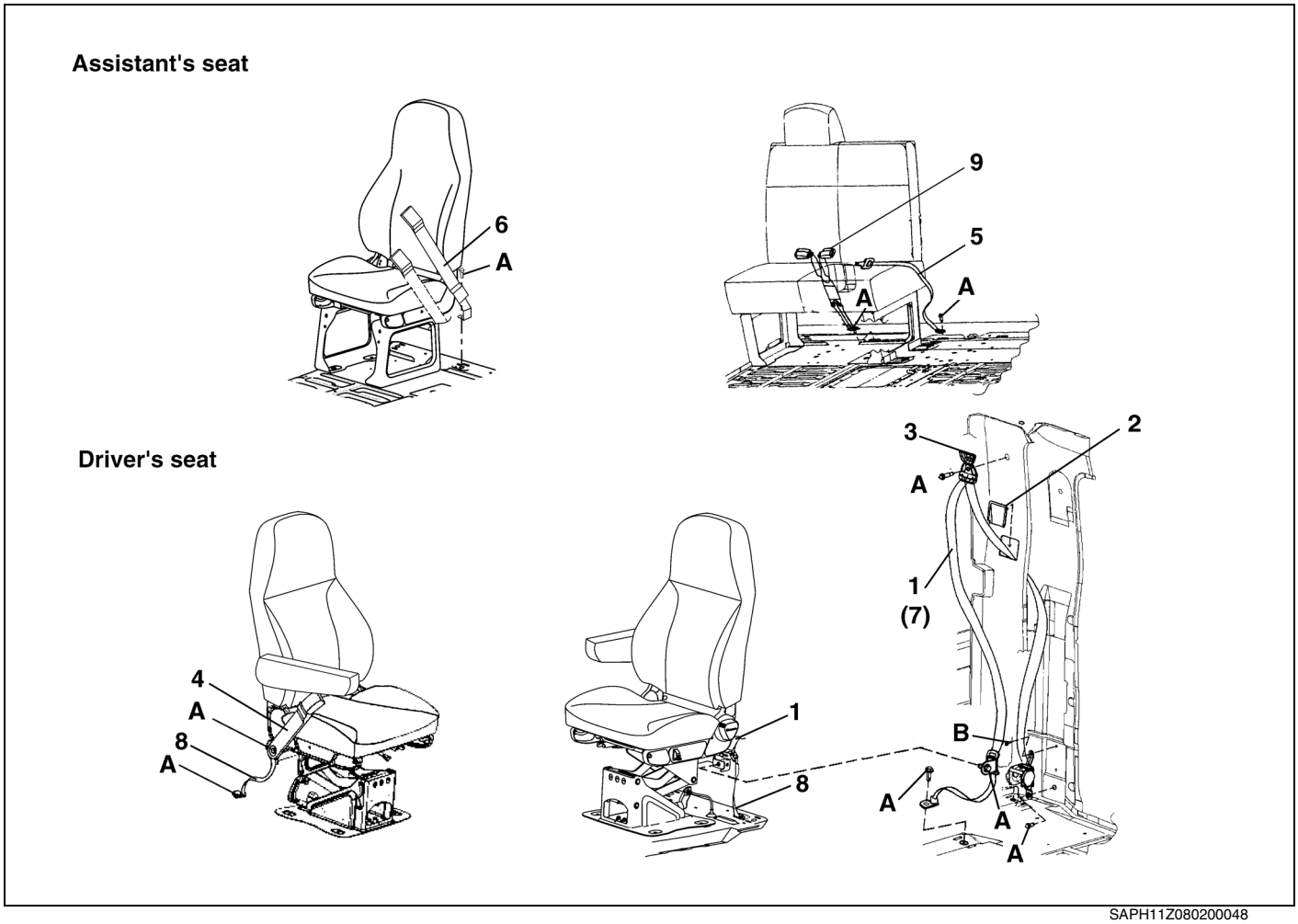


SAPH11Z080200048

| | | | |
|---|---|---|---|
| 1 | Outer seat belt (Driver's seat) | 6 | Inner seat belt (Assistant's seat) |
| 2 | Seat belt guide | 7 | Outer seat belt (Assistant's seat) |
| 3 | Seat belt cover | 8 | Tether belt (Driver's seat) |
| 4 | Inner seat belt (Driver's seat) | 9 | Inner seat belt (Assistant's seat and center seat) |
| 5 | Lap type seat belt (Center seat) | | |

**Tightening torque** **Unit: N·m {kgf·cm, lbf·ft}**

| | | | |
|---|---|---|---|
| A | 29.4-54.6 {300-556, 22-40} | B | 4.5-10.5 {46-107, 3.4-7.7} |

# INSTRUMENT PANEL

## COMPONENT LOCATOR

EN11Z0802D100007

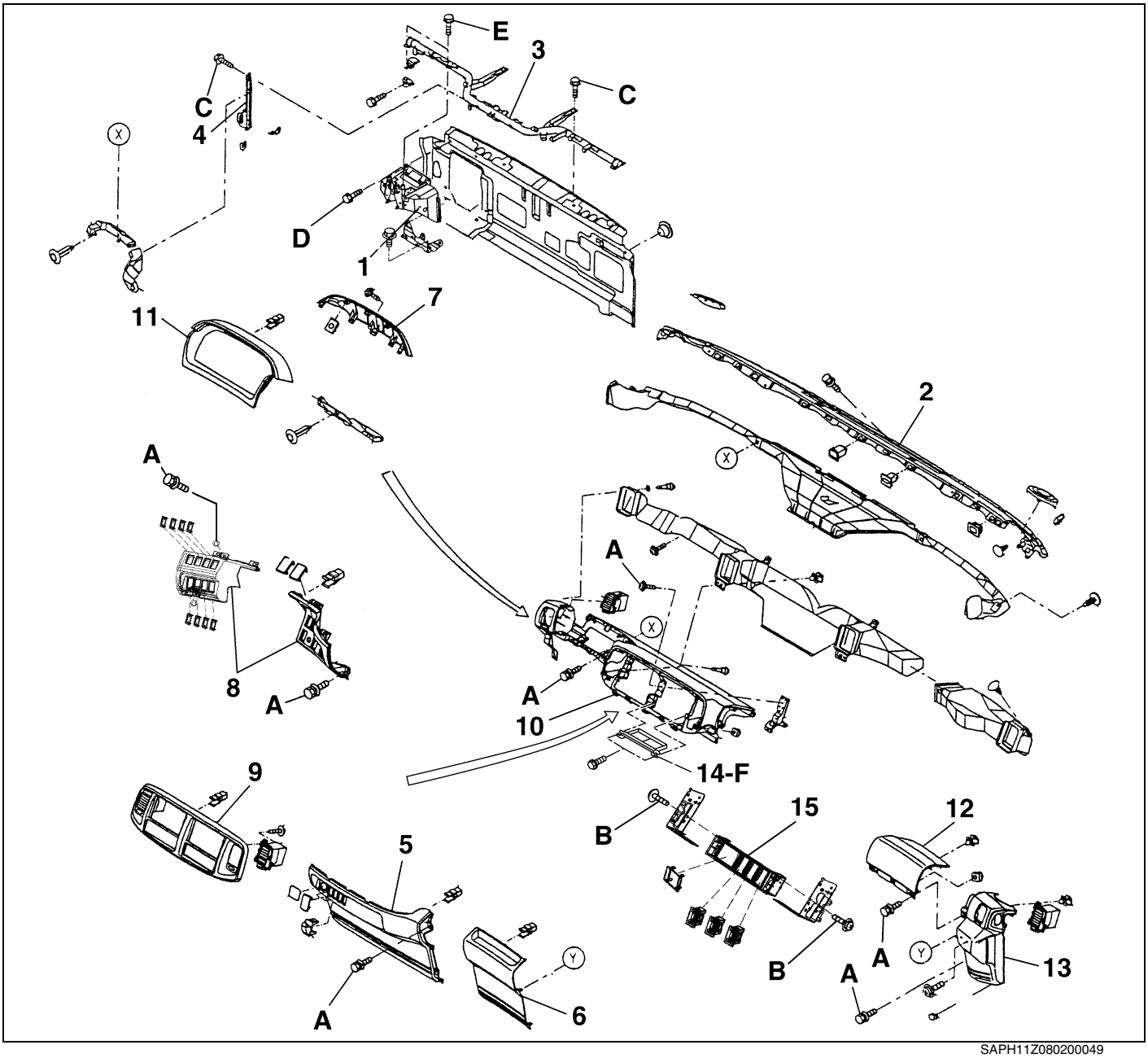


SAPH11Z080200049

| | | | |
|---|---|---|---|
| 1 | Pedal bracket support | 9 | Cluster finish panel |
| 2 | Upper panel | 10 | Cluster housing |
| 3 | Instrument panel cross member | 11 | Cluster bezel |
| 4 | Gusset | 12 | Upper right cover |
| 5 | Lower center cover | 13 | Side cover |
| 6 | Lower right cover | 14 | Cup holder (If so equipped) |
| 7 | Panel upper cover | 15 | Switch base |
| 8 | Switch board panel | | |

**Tightening torque** **Unit: N·m {kgf·cm, lbf·ft}**

| | | | |
|---|---|---|---|
| **A** | **2.8-3.2 {29-32, 2.1-2.3}** | **D** | **11.5-20.5 {117-209, 8.5-15.1}** |
| **B** | **1.5-2.5 {16-25, 1.2-1.8}** | **E** | **12-22 {122-224, 8.8-16.2}** |
| **C** | **7.5-16.5 {77-168, 5.6-12.1}** | **F** | **2.8-3.2 {29-32, 2.1-2.3}** |

# DISMOUNTING AND MOUNTING

EN11Z0802H100003

**1. BEFORE REMOVING THE INSTRUMENT PANEL.**

(1) Disconnect the battery cable from the battery ground terminal.

**2. REMOVE THE UPPER RIGHT COVER.**

(1) Remove the lower bolt on the upper right cover.

(2) Pull the upper right cover toward you, remove the 4 clips of this side.

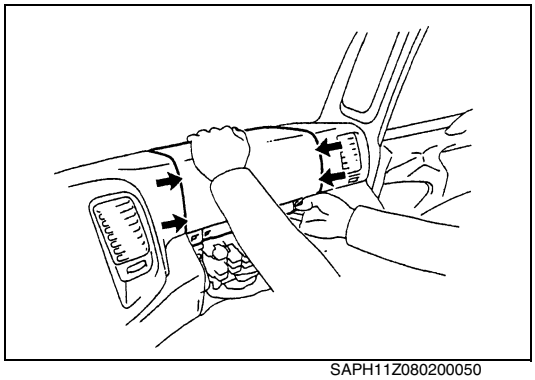

SAPH11Z080200050

**⚠ CAUTION**

- **When pulling the upper right cover, be careful not to damage the clips.**
- **Be sure to remove the 4 clips of this side beforehand because pulling out the upper right cover at one time may damage it.**

(3) Pull the upper right cover straight with both hands to remove the inner clip and remove the upper right cover.

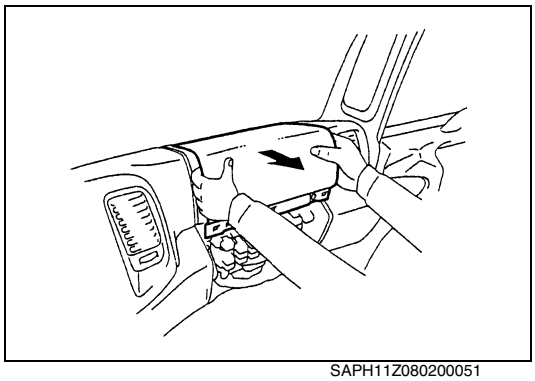

SAPH11Z080200051

**3. REMOVE THE SWITCH BOARD PANEL.**

(1) Remove the throttle control knob.

(2) Remove the bolt and pull out the switch board panel.

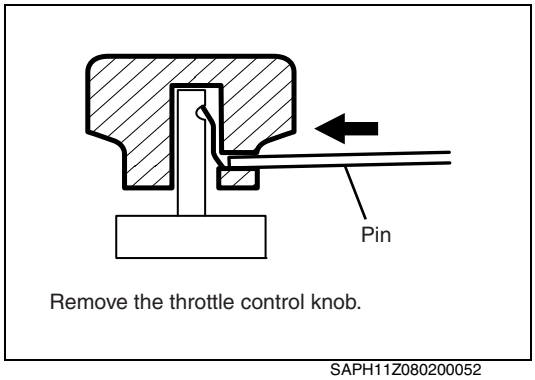


SAPH11Z080200052

# HEATER AND AIR CONDITIONER

## COMPONENT LOCATOR

EN11Z0802D100008

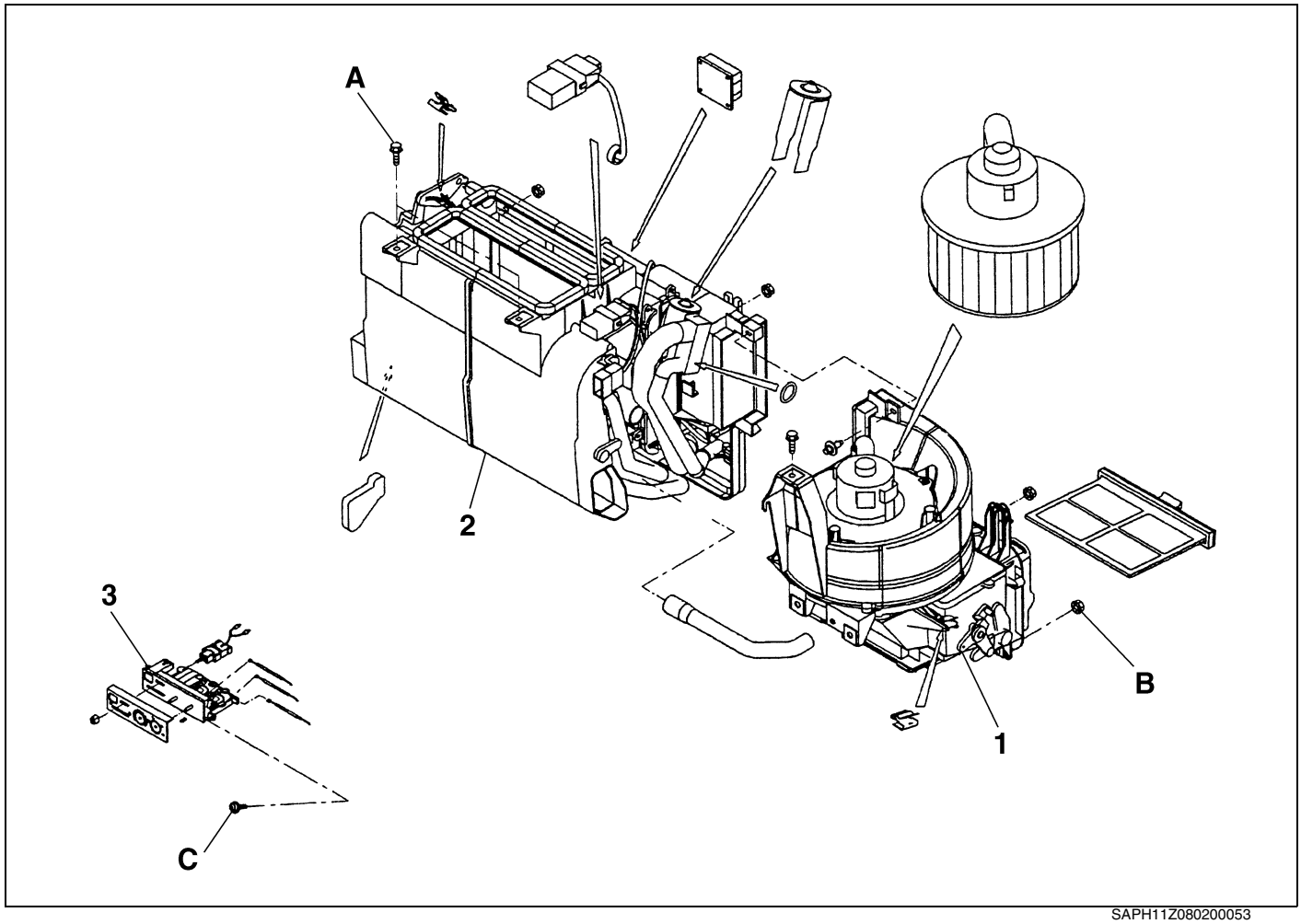


SAPH11Z080200053

| | | | |
|---|---|---|---|
| 1 | Blower assembly | 3 | Control panel assembly |
| 2 | Air conditioner assembly | | |

**Tightening torque** **Unit: N·m {kgf·cm, lbf·ft}**

| | | | |
|---|---|---|---|
| A | 3.9-4.9 {40-50, 2.9-3.6} | C | 1.4-2.4 {14-24, 1.0-1.7} |
| B | 3.9-4.9 {40-50, 2.9-3.6} | | |

## SPECIAL TOOL

EN11Z0802K100001

Prior to starting a steering linkage overhaul, it is necessary to have these special tools.

| Illustration | Part number | Tool name | Remarks |
|---|---|---|---|
| 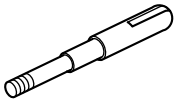 | S0944-41210 | COMPRESSION GAUGE | |

# AIR CONDITIONING SYSTEM

## SPECIFICATION DATA

EN11Z0802H100004

| Refrigerant | HFC 134a |
|---|---|
| Oil for air conditioning compressor. | ND-OIL 8 |

## PRECAUTIONS REGARDING REFRIGERANT (HFC134a)

EN11Z0802H300001

**1. COMPATIBILITY**

**The HFC134a system and R12 system do not have compatible cooling cycle components, compressor oil, and other parts.**

**2. ABOUT THE NEW REFRIGERANT (HFC134a)**

(1) Always use HFC134a. If the wrong refrigerant gas is used, the air conditioner compressor may lock up due to poor lubrication.

**3. ABOUT THE COMPRESSOR OIL**

(1) Always use compressor oil for HFC134a (ND-OIL8). If compressor oil for R12 is used in a compressor for HFC134a, the service life of the compressor will be severely shortened due to poor lubrication.

**Reference**
**Compressor oil for HFC134a: ND-OIL8**
**Compressor oil for R12: ND-OIL6**

(2) Compressor oil for HFC134a (ND-OIL8) has high moisture-absorbing characteristics. When disassembling the air conditioner, therefore, immediately plug openings with a plug or vinyl tape to keep outside air away from the oil.

(3) Compressor oil for HFC134a (ND-OIL8) has an adverse effect on acrylic and ABS resins. When replenishing the compressor oil, therefore, do not allow the oil to splatter.

(4) Do not allow compressor oil for HFC134a (ND-OIL8) to stick to painted surfaces, for it may cause the paint to peel.

**4. ABOUT THE O-RINGS**

(1) O-rings for HFC134a and O-rings for R12 have different materials, gauges, and other characteristics, so using the wrong O-ring may result in a gas leak. Always use an O-ring for HFC134a.

**5. PRECAUTIONS FOR EVACUATING AIR**

(1) When a vacuum pump for R12 is used to evacuate air and it is left on after the vacuum has been formed, the pump oil (for R12) may flow back into the HFC134a system. Always use an adapter equipped with a solenoid valve.

Halogen leak detector

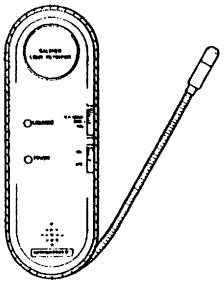

SAPH11Z080200055

**6. CHECKING FOR REFRIGERANT GAS LEAKS**

(1) The conventional halide torch type leak tester uses a reaction with chlorine to detect a refrigerant leak. It cannot be used to detect an HFC134a gas leak, therefore, not only because HFC134a contains no chlorine but also because the tester breaks down the sucked-in HFC134a and produces a toxic substance. Also, a conventional electric gas leak tester may not be sensitive enough to detect an HFC134a gas leak because HFC134a gas has smaller molecules than R12 gas. A halogen leak detector must therefore be used to detect an HFC134a gas leak.

(2) Detecting a refrigerant gas leak with the engine running is difficult because a gas leak would be diluted by air from the fan, blower, and other sources. Be sure to set the starter switch to the LOCK position when checking for a refrigerant gas leak.

# PRECAUTIONS FOR REPLENISHING THE REFRIGERANT GAS

EN11Z0802H500001

**1. WHAT TO DO IF REFRIGERANT GAS GETS IN YOUR EYES**

(1) Do not rub your eyes with your hands or a handkerchief.

(2) Immediately wash your eyes with clean water for at least 15 minutes and then see an eye specialist as soon as possible.

**2. PRECAUTIONS FOR HANDLING REFRIGERANT GAS (SERVICE CAN)**

(1) Do not apply heat directly to the can or immerse it in hot water, for this will cause the pressure inside the can to rise and burst the can. If the can must be warmed up, use running water that is no hotter than 40°C.

(2) Do not drop or impart shock to the service can.

(3) Do not open the valve on the high-pressure side of the gauge manifold while the engine is running, because it may cause high-pressure gas to flow back into the service can and burst the can.

(4) Do not hold the service can close to your face while handling it. Always wear safety goggles when working with the refrigerant gas.

# TROUBLESHOOTING (FAULT DIAGNOSIS BY SYMPTOMS)

EN11Z0802F300002

## FAULT DIAGNOSIS PROCEDURE

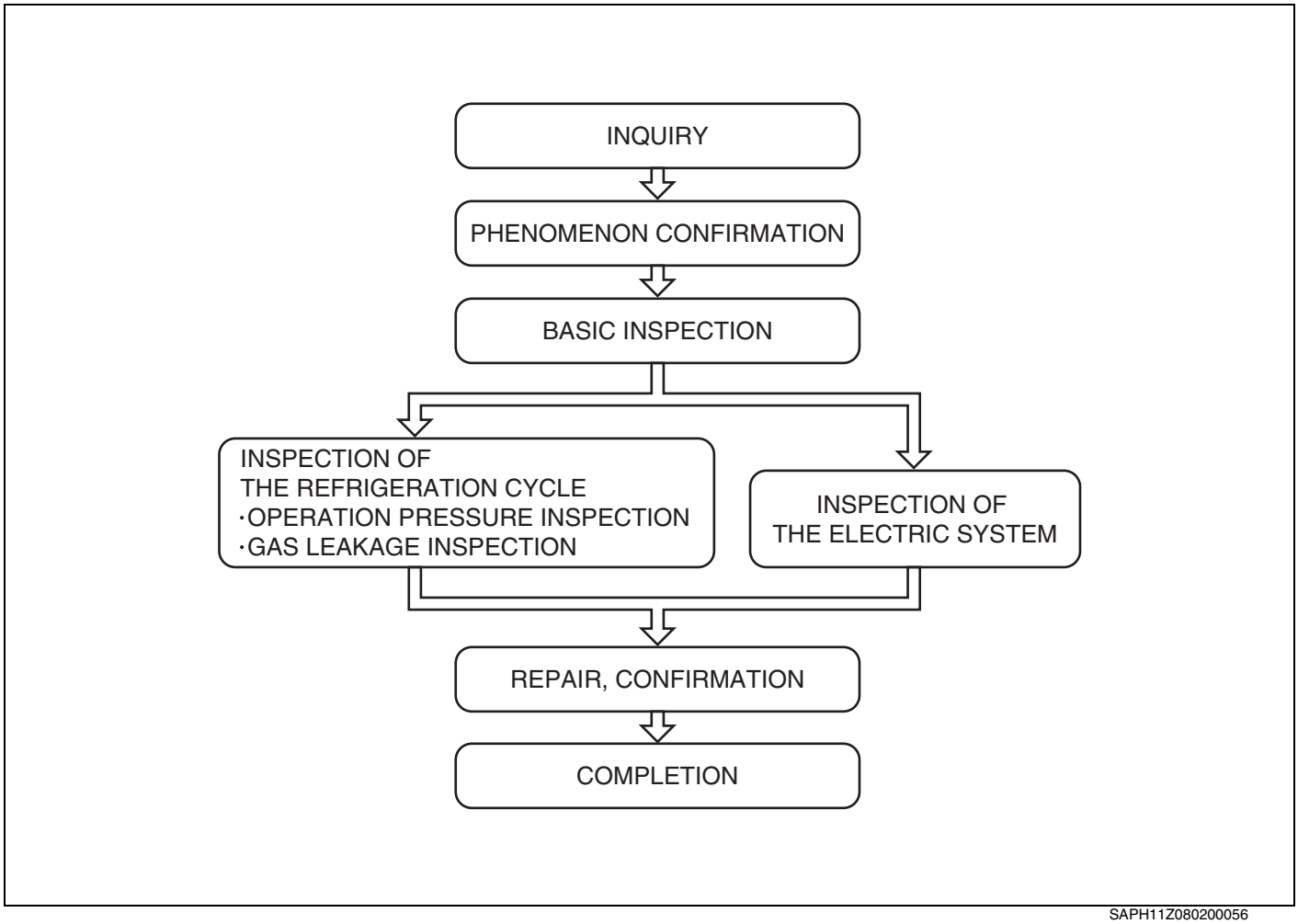


SAPH11Z080200056

The diagram shows the basic procedure for fault diagnosis.

## BASIC INSPECTION

| Symptom | Possible cause | Remedy/Prevention |
|---|---|---|
| **Abnormal noise from around the compressor** | Loosened mounting bolts of compressor or bracket | Retighten |
| | Broken discharge or suction valve Loosening of the connecting rod | Contact DENSO Service station for compressor repair or replacement. |
| | Insufficient compressor oil | Contact DENSO Service station and request oil quantity inspection and refilling. |
| **Oil leakage at connection parts or tightening parts of the refrigeration cycle.** | Gas leakage | Retighten. Replace the related parts. |
| **Abnormal noise from around the blower** | Foreign objects caught in the blower Insufficient blower tightening | Repair or replace the blower motor. |
| **Many air bubbles in the sight glass** | Insufficient refrigerant filling quantity | Contact DENSO Service station for refrigerant filling to a suitable quantity. |
| **No air bubbles visible in the sight glass and suction and discharge pressure both high** | Excessive refrigerant filling | Contact DENSO Service station for refrigerant bleeding to a suitable quantity (discharge into the atmosphere is prohibited). |
| **Insufficient V-belt tension** | — | V-belt retightening. If the V-belt has been worn thin, replace it by a new one. |
| **Condenser fins covered by mud or dust** | — | Wash off any mud or dust covering the condenser fins. |
| **Clogged air filter** | — | Clean the air filter. |
| **The control mechanism does not operate smoothly and accurately.** | — | Operate the levers and switches of the control panel and replace in case of abnormalities. Also inspect fuses and relays as required and replace them in case of abnormalities. |

## COMPRESSOR-RELATED

### ABNORMALLY HIGH DISCHARGE PRESSURE

| Symptom | Possible cause | Remedy/Prevention |
|---|---|---|
| **Even when the condenser is cooled with water, no air bubbles can be seen in the sight glass.** | Excessive refrigerant filling | Contact DENSO Service station for refrigerant bleeding to a suitable quantity (discharge into the atmosphere is prohibited). |
| **The pressure on the high-pressure side is abnormally high and immediately after the compressor is stopped, the pressure rapidly drops to approximately 2 kg/cm$^2$.** | Air has entered into the refrigeration cycle. | Contact DENSO Service station for refrigerant bleeding to a suitable quantity (discharge into the atmosphere is prohibited), and refill refrigerant after sufficient vacuum drawing in the refrigeration cycle. |

**ABNORMALLY HIGH SUCTION PRESSURE**

| Symptom | Possible cause | Remedy/Prevention |
|---|---|---|
| **Abnormally cold around low-pressure hose and service valve on the low-pressure side** | Excessive opening of the expansion valve | Contact DENSO Service station and request repair or replacement of the expansion valve. |
| **The pressure on the high-pressure side is high, but when the condenser is cooled, the suction pressure drops.** | Excessive refrigerant filling | Contact DENSO Service station for refrigerant bleeding (discharge into the atmosphere is prohibited). |
| **When the compressor is stopped, the pressure immediately becomes the same on high-pressure side and low-pressure side.** | Gasket breakage, high-pressure valve breakage, or entry of foreign matter | Contact DENSO Service station for gasket replacement, high-pressure valve replacement, or removal of foreign matter. |

**ABNORMALLY LOW DISCHARGE PRESSURE**

| Symptom | Possible cause | Remedy/Prevention |
|---|---|---|
| **No dew becomes attached to the outlet of the expansion valve and the pressure on the low-pressure side is a negative pressure.** | Expansion valve freezing or defective expansion valve | Contact DENSO Service station and request replacement of the expansion valve. |
| **Many air bubbles pass through the sight glass and the condenser is not hot.** | Too little refrigerant. | Contact DENSO Service station for refrigerant filling to a suitable quantity. |
| **When the compressor is stopped, the pressure immediately becomes the same on high-pressure side and low-pressure side.** | Breakage of compressor discharge valve and/or suction valve, catching of foreign matter | Contact DENSO Service station for compressor repair or replacement. |

**ABNORMALLY LOW SUCTION PRESSURE**

| Symptom | Possible cause | Remedy/Prevention |
|---|---|---|
| **Many air bubbles can be seen in the sight glass and the condenser is not hot.** | Insufficient refrigerant filling | Contact DENSO Service station for refrigerant filling to a suitable quantity. |
| **No dew becomes attached to the outlet of the expansion valve and the low-pressure piping is not cold.** | Expansion valve freezing or defective expansion valve | Contact DENSO Service station and request replacement of the expansion valve. |
| **Low temperature of the discharge port, no air is blown out.** | There is frost on the evaporator. | Contact DENSO Service station for thermistor replacement and position confirmation. |
| **There is frost on the expansion valve.** | The expansion valve tends to become clogged. | Contact DENSO Service station for cleaning (moisture removal) or replacement. |
| **There is a temperature difference around receiver and drier, and in extreme cases, there is frost on the piping after the receiver strainer.** | Clogging of receiver and drier | Contact DENSO Service station for desiccant in the modulator and for replacement of receiver and drier. |

**DISCHARGE PRESSURE AND SUCTION PRESSURE BOTH HIGH**

| Symptom | Possible cause | Remedy/Prevention |
|---|---|---|
| **Much dust on the condenser fins** | Insufficient condenser cooling | Wash off the dust to improve air passage. |
| **No air bubbles pass through the sight glass** | Excessive refrigerant filling | Contact DENSO Service station for refrigerant bleeding to a suitable quantity (discharge into the atmosphere is prohibited). |
| **The surroundings of the service valve are cold compared to the evaporator.** | Clogging in the equipment and/or piping on the low-pressure side. | Contact DENSO Service station for repair or replacement. |
| **The temperature at the expansion valve inlet is low in comparison with the temperature around receiver and drier.** | Clogging in the piping on the high-pressure side. | Contact DENSO Service station for compressor repair or replacement. |

**GAS LEAKAGE**

| Symptom | Possible cause | Remedy/Prevention |
|---|---|---|
| **Notable dirt on the shaft seal part and decreasing gas** | Gas leakage from the shaft seal | Contact DENSO Service station for shaft seal replacement. |
| **Oil contamination on the bolt part** | Gas leakage from the respective tightening bolt part | Retighten |
| **Oil contamination on the gasket part** | Gas leakage from each gasket part | Contact DENSO Service station for gasket replacement. |
| **Leakage from broken parts** | Gas leakage from broken parts | Contact DENSO Service station for replacement of the broken parts. |

**NO ADSORPTION**

| Symptom | Possible cause | Remedy/Prevention |
|---|---|---|
| **The wiring relation is correct.** | Coil wire break | Contact DENSO Service station for replacement of the coil with a wire break. |
| **No adsorption even with cooler switch ON** | Wire break, wrong wiring, defective contact of wiring-related parts (ground, fuse) | Inspect the harness connectors and repair or replace in case of abnormalities. |
| | Defective contact or operation of switches (thermostat, relay, cooler switch) | Inspect the switch-related parts and repair or replace in case of abnormalities. |
| **Simultaneously with switch ON, the rotor moves and there is adsorption when it is pushed.** | Too large gap between rotor and stator | Contact DENSO Service station for repair or compressor replacement. |

**SLIPPING OCCURS**

| Symptom | Possible cause | Remedy/Prevention |
|---|---|---|
| **The clutch slips at the time of rotation.** | Drop of the battery voltage | Charge the battery. |
| | Clutch surface contaminated with oil | Contact DENSO Service station for oil removal. |
| | Coil layer short-circuit | Contact DENSO Service station for replacement of the coil with a wire break. |

## RELATED TO THE EXPANSION VALVE

**THE VALVE OUTLET IS NOT COLD**

| Symptom | Possible cause | Remedy/Prevention |
|---|---|---|
| **No temperature difference can be felt between inlet and outlet.** | Extremely little refrigerant in the refrigeration cycle. | Check for gas leakage and repair if there is leakage. After repair fill in the correct quantity of refrigerant. |
| **No temperature difference can be felt between inlet and outlet.** | Excessive opening of the expansion valve | Contact DENSO Service station and request replacement of the expansion valve. |

**THE VALVE INLET IS COLD AND THERE IS DEW ON IT**

| Symptom | Possible cause | Remedy/Prevention |
|---|---|---|
| **Frost is formed.** | Excessively closed expansion valve | Contact DENSO Service station and request adjustment or replacement of the expansion valve. |
| | A tendency for clogging in the expansion valve | Contact DENSO Service station for replacement of the desiccant in expansion valve and modulator and for replacement of receiver and drier. |

## ABNORMAL NOISE DURING OPERATION

Abnormal noise can occur with various operation conditions. Accordingly, careful inspection must be performed under sufficient consideration of the contents of the inquiry.

- Does the abnormal noise occur with the air conditioner OFF?
- Does the abnormal noise occur with the air conditioner ON?
- Does the noise occur sometimes, continuously, or directly after air conditioner ON?

**WHEN THE AIR CONDITIONER IS ON**

| Symptom | Possible cause | Remedy/Prevention |
|---|---|---|
| **Abnormal noise occurring when the refrigerant is discharged from the compressor** | Caused by refrigerant compression fluctuations | Contact DENSO Service station to have the refrigerant filling quantity reduced to the specified minimum value (discharge into the atmosphere is prohibited). |
| **Abnormal noise from the compressor** | Defective compressor | Contact DENSO Service station for compressor repair or replacement. |

**DIRECTLY AFTER THE AIR CONDITIONER IS SWITCHED ON**

| Symptom | Possible cause | Remedy/Prevention |
|---|---|---|
| **Abnormal noise occurring when the compressor is started with liquid refrigerant remaining on the inside** | Accumulation of liquid refrigerant caused by liquid compression | Contact DENSO Service station to have the refrigerant filling quantity reduced to the specified minimum value (discharge into the atmosphere is prohibited). |
| **Abnormal metallic noise when the magnet clutch disengages and engages** | Caused by disengaging and engaging of the magnet clutch | Contact DENSO Service station for setting the attraction gap of the magnet clutch to the lower limit value. |

**FROM TIME TO TIME AFTER THE AIR CONDITIONER IS SWITCHED ON**

| Symptom | Possible cause | Remedy/Prevention |
|---|---|---|
| **An abnormal knocking noise when the clutch pulley deflection is transmitted via the shaft to the inside of the compressor** | Weak belt tension | Adjust the belt tension to the standard upper limit value. Contact DENSO Service station for setting the attraction gap of the magnet clutch to the lower limit value. |
| **Abnormal noise caused by refrigerant passing through expansion valve and magnet valve** | Noise caused by passage of refrigerant through the expansion valve | Confirm that the refrigerant quantity is the specified filling quantity, and if this is not the case, recover or refill as required. |

**ONLY WHEN THE AIR CONDITIONER SWITCH IS ON**

| Symptom | Possible cause | Remedy/Prevention |
|---|---|---|
| **Abnormal noise from the compressor** | Defective compressor | Contact DENSO Service station for compressor repair or replacement. |

## ABNORMAL NOISE BY PARTS

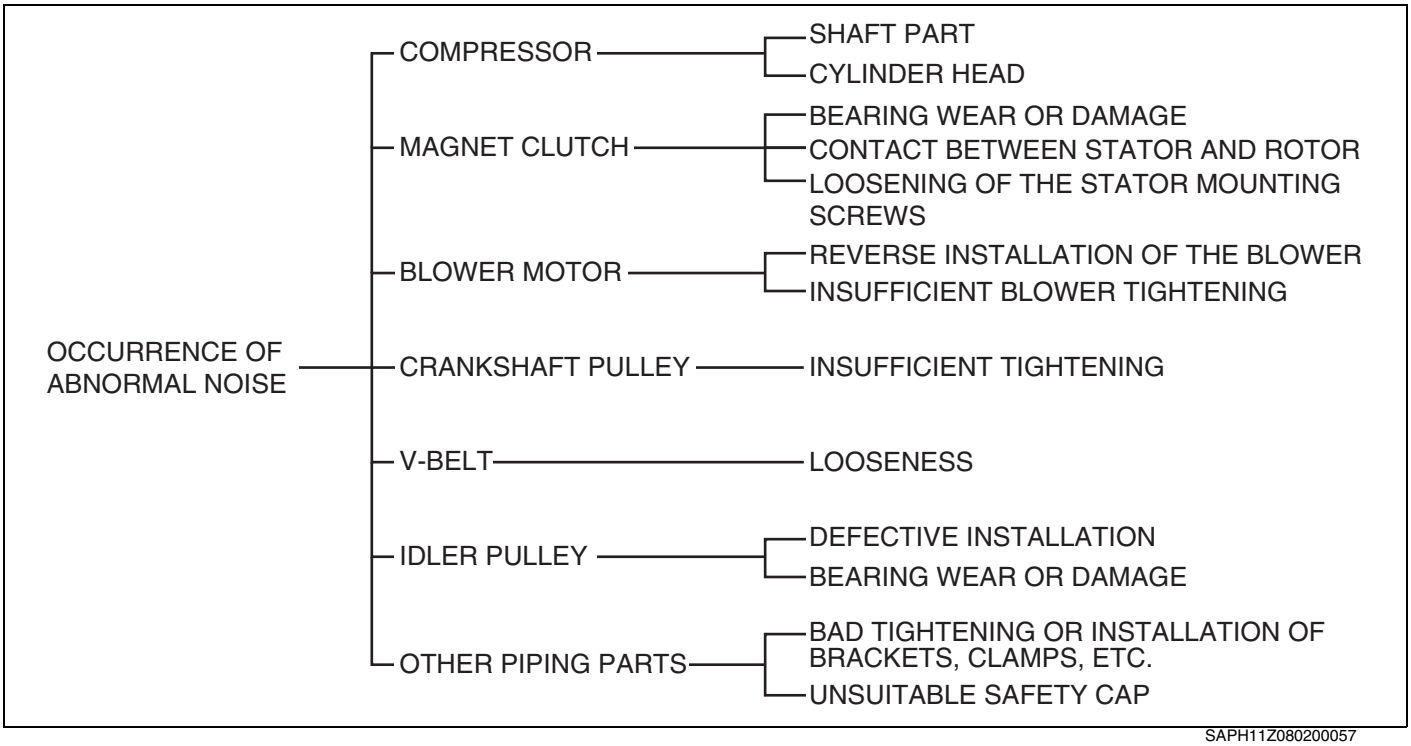


SAPH11Z080200057

**ABNORMAL NOISE FROM THE COMPRESSOR**

| Symptom | Possible cause | Remedy/Prevention |
|---|---|---|
| **A knocking noise from inside the compressor** | Foreign matter caught in discharge valve or suction valve | Contact DENSO Service station for disassembly of the compressor and removal of the foreign matter. |
| | Broken discharge valve or suction valve | Contact DENSO Service station for replacement of the discharge valve or the suction valve. |

**ABNORMAL NOISE FROM THE MAGNET CLUTCH**

| Symptom | Possible cause | Remedy/Prevention |
|---|---|---|
| **A rattling noise from the magnetic clutch while it is not operating** | Bearing wear or breakage | Contact DENSO Service station for bearing replacement. |

**ABNORMAL NOISE FROM THE PIPING**

| Symptom | Possible cause | Remedy/Prevention |
|---|---|---|
| **The piping is vibrating.** | The piping is not fixed. | Fix the piping. |

**ABNORMAL NOISE FROM THE BRACKET**

| Symptom | Possible cause | Remedy/Prevention |
|---|---|---|
| **The bracket has play when touched and causes noise during operation.** | The bracket is cracked or broken. | Replace the bracket. |
| | Loose fixing bolts | Retighten |

**ABNORMAL NOISE FROM THE IDLER PULLEY**

| Symptom | Possible cause | Remedy/Prevention |
|---|---|---|
| **Abnormal rattling noise** | Broken bearing | Replace the bearing. |
| **Shows play when touched** | Cracked or loose bracket | Replace or retighten the bracket. |

**ABNORMAL NOISE FROM THE V-BELT/NORMAL NOISE FROM THE CRANKSHAFT PULLEY**

| Symptom | Possible cause | Remedy/Prevention |
|---|---|---|
| **Rattling** | Defective installation of the crankshaft pulley | Install the crankshaft pulley correctly. |
| | Broken bearing | Replace the bearing. |
| | Defective key groove | Replace the crankshaft pulley. |

**ABNORMAL NOISE FROM THE V-BELT**

| Symptom | Possible cause | Remedy/Prevention |
|---|---|---|
| **Large deflection of the V-belt** | Loose V-belt | Retighten the V-belt. |
| **Cut side of the V-belt** | The pulley is off-center. | Center the pulley. |

## INSPECTION OF THE REFRIGERATION CYCLE

INSPECTION WITH A GAUGE MANIFOLD

NORMAL VALUE
- HIGH-PRESSURE SIDE: 1.37 - 1.57 MPa {14 - 16 kgf/cm$^2$, 200 - 227 lbf/in$^2$}
- LOW-PRESSURE SIDE: 0.15 - 0.25 MPa {1.5 - 2.5 kgf/cm$^2$, 22 - 351 lbf/in$^2$}

<CONDITIONS>

| | |
|---|---|
| • DOORS | : FULLY OPEN |
| • INSIDE/OUTSIDE AIR SWITCHING | : INSIDE AIR |
| • ENGINE SPEED | : 1500 rpm |
| • SUCTION PORT TEMPERATURE | : 30 - 35℃ {86.0 - 95.0℉} |
| • BLOWER SPEED | : HI |
| • TEMPERATURE CONTROL | : COLDEST |

SAPH11Z080200058

**BAD COOLING**

| Symptom | Possible cause | Remedy/Prevention |
|---|---|---|
| **No air bubbles occur in the sight glass.** | Excessive refrigerant filling, insufficient condenser cooling | Adjust to a suitable refrigerant filling quantity (discharge into the atmosphere is prohibited). Check the condenser fins for clogging, inspect the vehicle cooling system, and clean or repair in case of abnormalities. |
| **Air bubbles occur in the sight glass.** | Insufficient refrigerant filling | Contact DENSO Service station for repair in case of gas leakages and for refrigerant filling to a suitable quantity. |
| **Insufficient air flow** | Frosted evaporator | Contact DENSO Service station for inspection of evaporator and thermistor. Repair or replace in case of abnormalities. |
| **Bad cooling** | Insufficient evaporator heat exchange, defective operation of the electric fan | Remove any clogging of the evaporator fins. Inspect the electric fan and replace it in case of abnormalities. |

**OTHER PHENOMENA**

| Symptom | Possible cause | Remedy/Prevention |
|---|---|---|
| **The low-pressure piping does not cool, there are always bubbles in the sight glass.** | Entry of air into the refrigeration cycle | Contact DENSO Service station for refrigerant bleeding to a suitable quantity (discharge into the atmosphere is prohibited), and refill refrigerant after sufficient vacuum drawing in the refrigeration cycle. |
| **The low-pressure side shows a negative pressure (when the refrigeration cycle is completely clogged. In case of a clogging tendency, negative pressure is shown gradually).** | Clogging of the refrigeration cycle (piping, expansion valve, receiver, drier, etc.) | Contact DENSO Service station for replacement of abnormal parts in the refrigeration cycle. |
| **After expiration of a fixed time, the low-pressure side gradually shows a negative pressure.** | Entry of water into the refrigeration cycle, water absorption capacity of receiver and drier exceeded | Contact DENSO Service station for desiccant in the modulator and for replacement of receiver and drier. Perform sufficient vacuum drawing and moisture removal before refrigerant filling. |
| **Condensation forms on the low-pressure-piping.** | Excessive opening of the expansion valve | Contact DENSO Service station and request replacement of the expansion valve. |
| **When the compressor is switched off, high pressure and low pressure show the same value (the compressor does not become very hot).** | Defective compressor compression | Contact DENSO Service station for compressor repair. |

# GAS LEAKAGE INSPECTION

EN11Z0802H300002

When the basic inspection indicates that there may be leakage of refrigerant, use a halogen leak detector and inspect as described below.

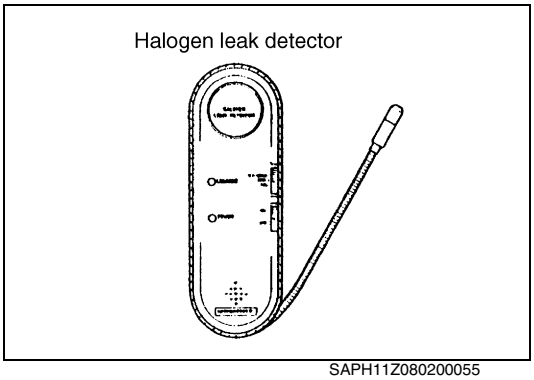

SAPH11Z080200055

**1. ADVANCE CHECKING**

**CONNECT THE GAUGE MANIFOLD AND CONFIRM THE STATUS OF THE REFRIGERANT REMAINING IN THE REFRIGERATION CYCLE.**

**THEN REFILL REFRIGERANT AS REQUIRED AND INCREASE THE PRESSURE IN THE REFRIGERATION CYCLE TO INCREASE THE GAS LEAKAGE DETECTION ACCURACY AS THE ADVANCE CHECK.**

(1) Read the gauge pressure with stopped compressor.

(2) If the gauge pressure is approximately 0.4 MPa {4 kgf/cm$^2$, 57 lbf/in$^2$}, start inspection in this condition. However, the ambient temperature shall be 15°C or more.

(3) If the gauge pressure is lower than approximately 0.4 MPa {4 kgf/cm$^2$, 57 lbf/in$^2$}, refill refrigerant and start inspection only from a condition with 0.4 MPa or more.

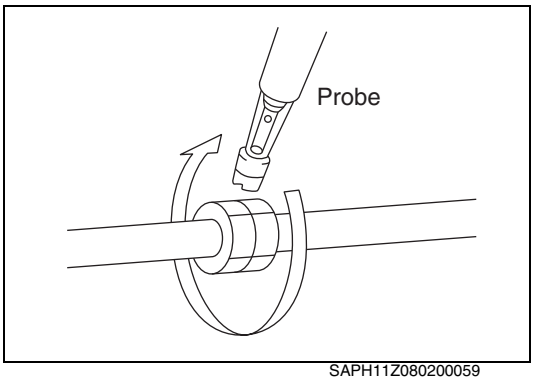

SAPH11Z080200059

**NOTICE**

**Gas leaking from piping connections flows with minute air currents. When bringing the probe into contact with the location to be checked, approach not only from one direction, but from all directions.**

**⚠ CAUTION**

**Do not perform gas leakage inspection with a halide torch leak detector. This type of tester uses the reaction with chlorine to detect gas leakage, so that it not only cannot detect HFC134a refrigerant not containing chlorine, but also decomposes any HFC134a which has been sucked in and generates harmful substances.**

## 2. INSPECTION PROCEDURE

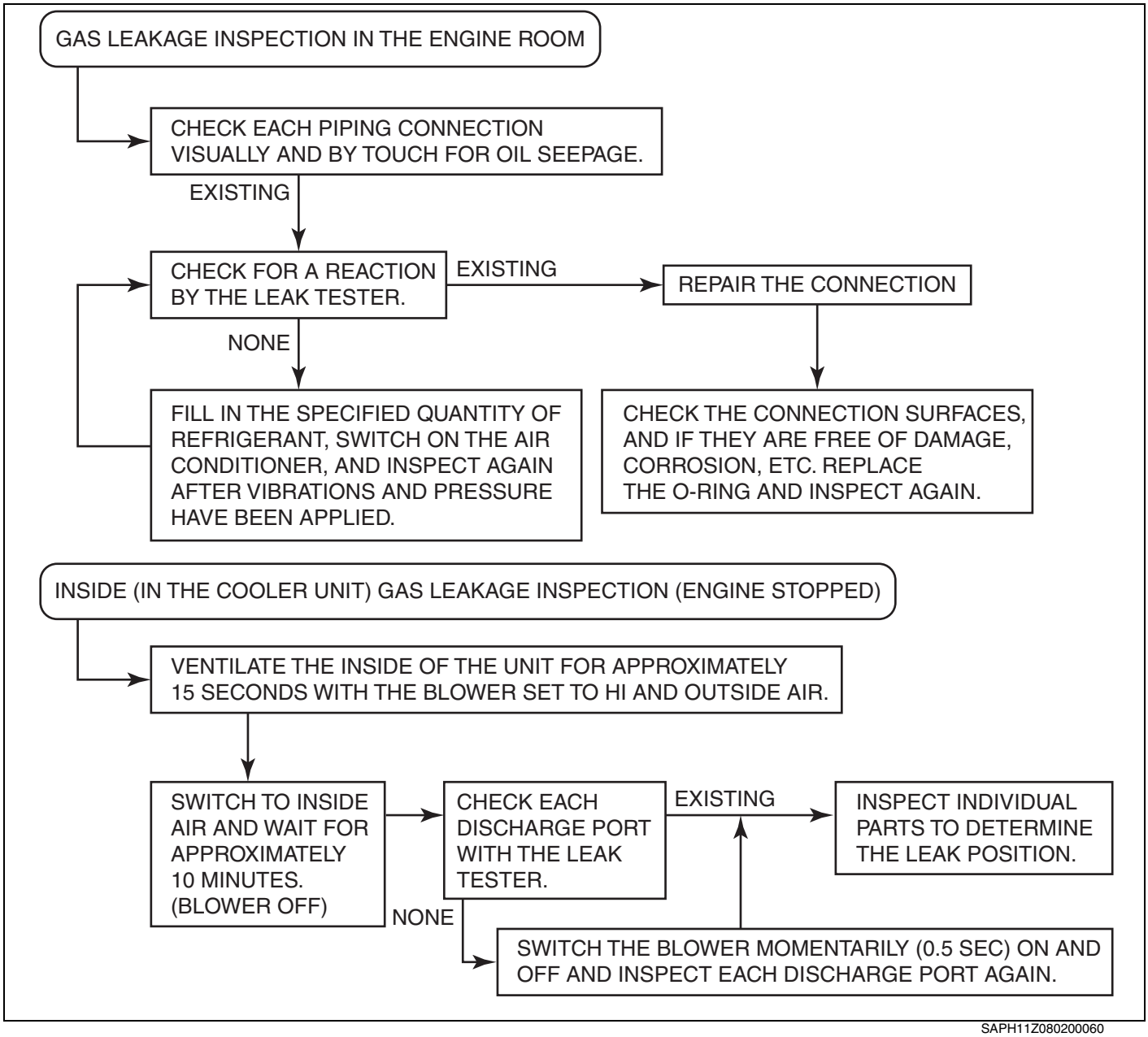


SAPH11Z080200060

**⚠ CAUTION**

**Cautions for use of the leak tester**

- **Handling of Hi sense: As Hi sense easily can cause erroneous reactions in the engine room, use a different mode for the inspection. (It is effective for leakage inspection in the unit.)**
- **Leak tester reaction time: The reaction time of a normal tester is within several seconds, but it differs according to the wind direction.**
  **In case of irregular reaction, inspect repeatedly.**
- **Erroneous reaction of the leak tester: Please note that erroneous reactions can be caused by volatile gases (gasoline, thinner, etc.), steam, low battery voltage, defective contact of the sensor part, etc.**

**3. INSPECTION OF THE ELECTRIC CIRCUITS**
**FOR THE INSPECTION, REFER TO THE RESPECTIVE WIRING DIAGRAMS AND UNDERSTAND THE CIRCUITS. THEN USE A CIRCUIT TESTER OR SIMILAR TO SYSTEMATICALLY CHECK THE CONNECTION OF THE PARTS.**

(1) Blown fuse
   a. Refer to the wiring diagram and check the circuit where the fuse has blown.
   b. To inspect equipment parts for internal short-circuits, try disconnecting their connectors.

(2) Defective connector contact
   a. Please note that function parts may not function because of defective connector contact.
   b. Unstable operation and erroneous operation when the vehicle vibrates often are caused by defective connector contact.

(3) Defective body grounding
   a. Even when the external appearance is quite normal, insulation may be caused by a coat of paint or rust.

# PRECAUTIONS FOR REMOVING/INSTALLING THE AIR CONDITIONER

EN11Z0802H200005

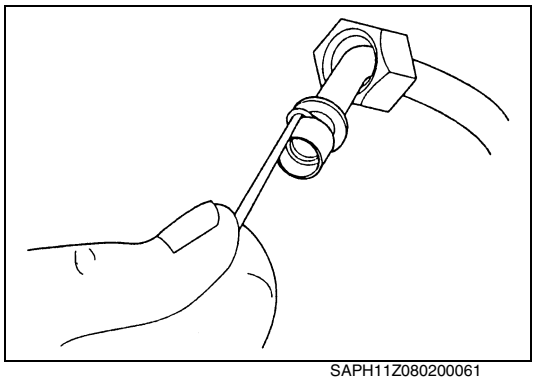

SAPH11Z080200061

## 1. PRECAUTIONS FOR CHANGING O-RINGS

(1) Always replace an old O-ring with a new O-ring for HFC134a when you remove a pipe or hose.
(2) Use a toothpick or other soft implement to remove the O-ring so that you do not damage the pipe or hose.

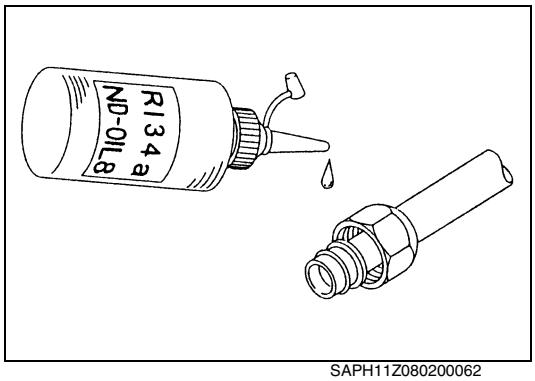


SAPH11Z080200062

## 2. PRECAUTIONS FOR CONNECTING PIPES AND HOSES

(1) Coat the O-ring with compressor oil (ND-OIL8) when making a pipe or hose connection.
(2) Pipe joints in the HFC134a system have a cylindrical surface seal, so you can feel them snap together when they are assembled.

**NOTICE**
**Use compressor oil for HFC134a (ND-OIL8) to coat O-rings for HFC134a. Do not use a penetrating type lubricating oil (mineral oil) or other oil.**

(3) When connecting pipes, use the tightening torques shown in the following table.

**NOTICE**
**Insufficient or excessive torque can cause a refrigerant gas leak due to an improperly installed or broken O-ring. Always use the specified tightening torque.**

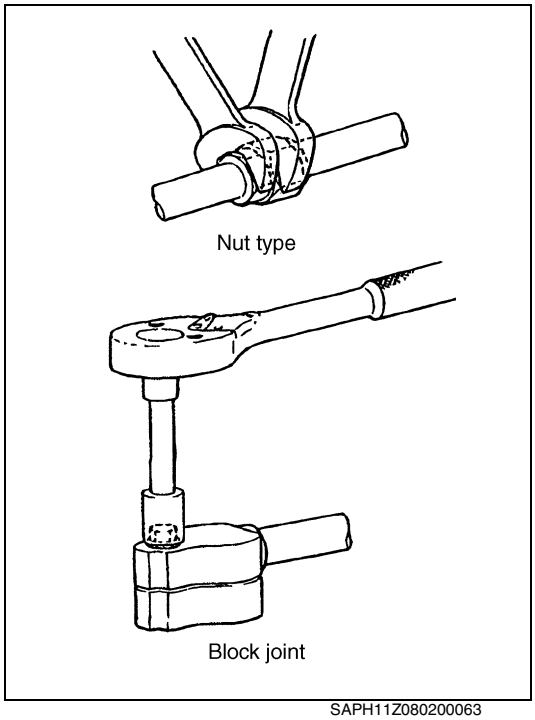


SAPH11Z080200063

| Connection | Tube size or Bolt size | Tightening torque N·m (kgf·cm) |
|---|---|---|
| Nut type | ϕ8 tube | 12—15 (120—150) |
| | D1/2 tube | 20—25 (200—250) |
| | D5/8 tube | 30—35 (300—350) |
| Block joint | M6 bolt in receiver (4T) | 4.0—7.0 (40—70) |
| | Above other M6 bolt (6T) | 8.0—12 (80—120) |



SAPH11Z080200064

### 3. REPLENISHING THE COMPRESSOR OIL

(1) When replacing a functional part
When replacing a functional part (condenser, evaporator, etc.), supply the amount of new compressor oil shown in the following table.

**NOTICE**

- **Use compressor oil for HFC134a (R134a)**
- **Compressor oil for HFC134a (R134a) has an adverse effect on acrylic and ABS resins. When replenishing the compressor oil, therefore, do not allow the oil to splatter.**

**Compressor oil replacement**

| | Replace parts | | | | |
|---|---|---|---|---|---|
| | **Compressor** | **Condenser** | **Evaporator** | **Receiver** | **Tubes** |
| **Oil replacement amount** | **(as follows)** | **40 cc** | **40 cc** | **10 cc** | **10 cc (per one tube)** |

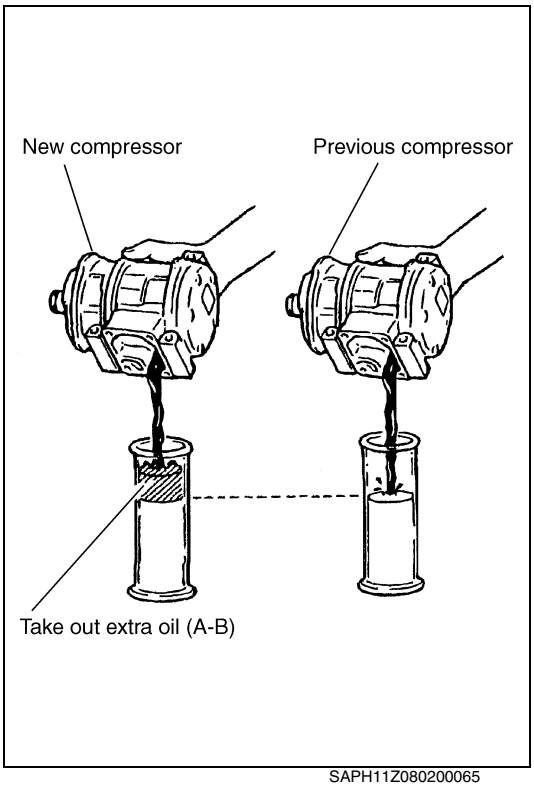

SAPH11Z080200065

(2) When changing the compressor oil
A new compressor is filled with the amount of oil required by its operating cycle. When changing the compressor, therefore, take out the extra oil contained in the new compressor.

**NOTICE**

- **Compressor oil for HFC134a (R134a) readily absorbs moisture, so it should be sealed immediately after it has been used.**
- **When transferring compressor oil to an oil can, be sure to use an oil can that has been labeled for HFC134a (R134a) use.**

# RECOVERY AND REPLENISHMENT OF REFRIGERANT

EN11Z0802H500002

## 1. RECOVERING THE REFRIGERANT (HFC134a)

(1) Connect a gauge manifold to the air conditioner piping service valve and the refrigerant gas recovery unit, and then open the valves on the low-pressure and high-pressure sides and recover the refrigerant gas.

(2) Once the gas has been recovered, close the gauge manifold valves (low-pressure side and high-pressure side).

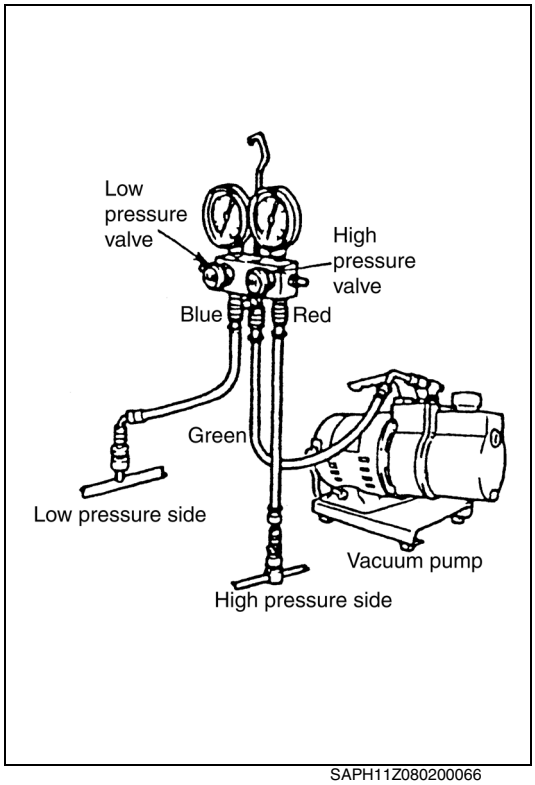


SAPH11Z080200066

## 2. REPLENISHING THE REFRIGERANT (HFC134a)

(1) Evacuate air to form a vacuum.

a. Connecting the gauge manifold

(a) Connect charging hoses to the low-pressure and high-pressure service valves.

- Red hose on high-pressure side (H mark)
- Blue hose on the low-pressure side (L mark)

(b) Connect the middle charging hose on the gauge manifold (green hose) to a vacuum pump.

**NOTICE**

- **Do not get the low-pressure and high-pressure sides mixed up.**
- **In some models, the service valve is installed on the compressor.**

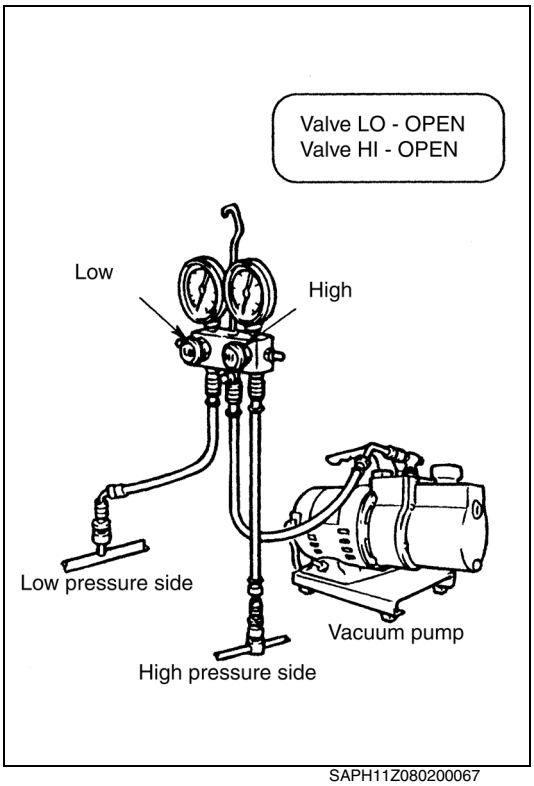


SAPH11Z080200067

b. Forming a vacuum
(a) Open the gauge manifold high-pressure valve (HI) and low-pressure valve (LO).
(b) Turn on the vacuum pump and evacuate air until a vacuum is formed (10 minutes).
(c) When the low-pressure gauge scale reading equals or exceeds -0.1MPa (-750mmHg), close the high-pressure and the low-pressure valves and turn off the vacuum pump.

**NOTICE**
**If the pump is switched off before the gauge manifold valves are closed, air will get into the system.**

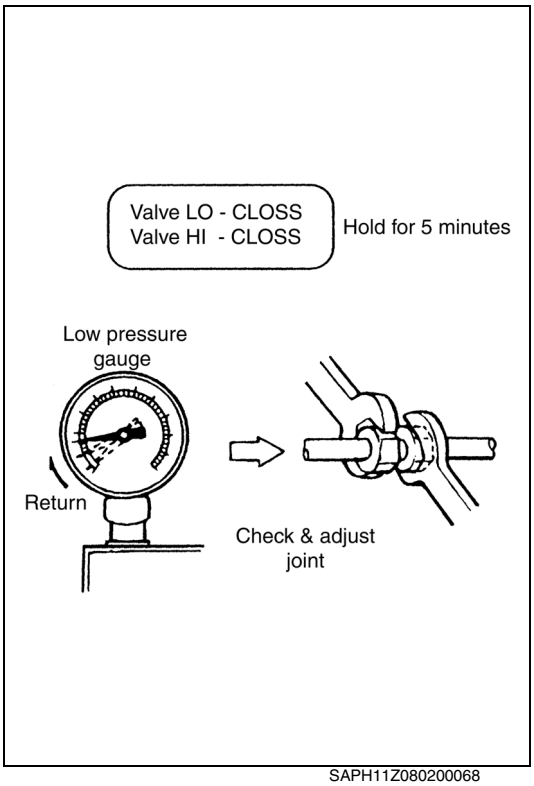


SAPH11Z080200068

c. Airtightness check (1) (using the gauge needle)
(a) Leave the gauge manifold high-pressure and low-pressure valves closed (for 5 minutes) and make sure that the gauge needle does not return to the zero point.

**NOTICE**
**If the gauge needle returns to the zero point, it means that air is leaking out somewhere. Check and adjust the pipe joints and then re-form the vacuum and check for airtightness.**

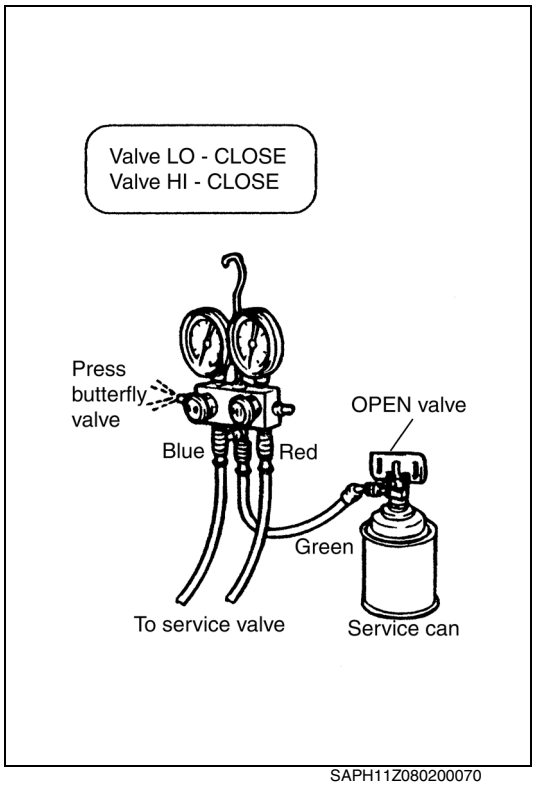


SAPH11Z080200070

d. Airtightness check (2) (using refrigerant)
Add a small quantity of refrigerant and then check for airtightness using a gas leak detector.
(a) Remove the charging hose connected to the vacuum pump (green hose) and connect it to a service can.
(b) Remove the air inside the charging hose (green).

- Tighten the service can valve handle and open the hole in the service can; then open the valve.
- Press the butterfly valve on the gauge manifold so that the air inside the hose is expelled by the refrigerant pressure. Continue until you hear the whooshing sound of refrigerant escaping.

**NOTICE**

- **At this time, the gauge manifold high-pressure and low-pressure valves should both be closed.**
- **Be careful not to get refrigerant on your hands (or they may get frostbitten).**

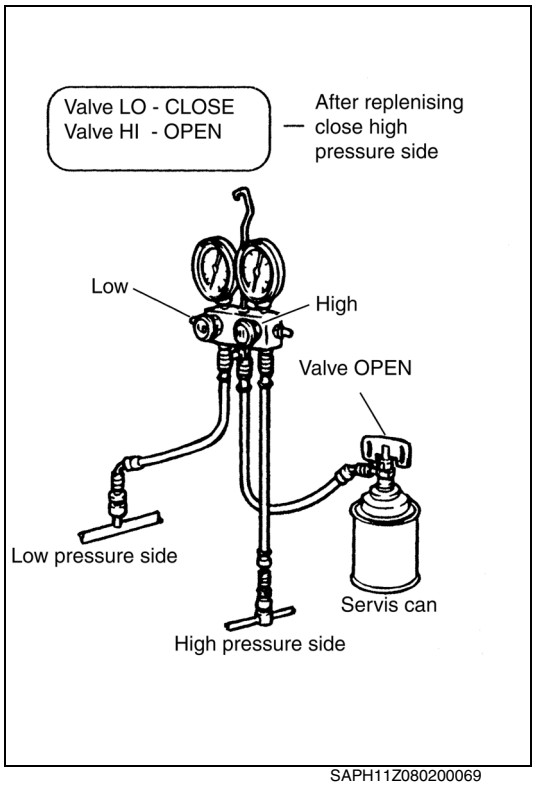


SAPH11Z080200069

(c) Open the gauge manifold high-pressure valve and supply refrigerant until the low-pressure gauge reading reaches 0.1 MPa (1 kgf/cm$^2$).

(d) Close the high-pressure valve once the refrigerant has been replenished.
(e) Carefully check for air leakage using a gas leak detector. Repair any leaks that you find.

**NOTICE**
**Be sure to use a gas leak detector for HFC134a (R134a) when checking for gas leaks.**

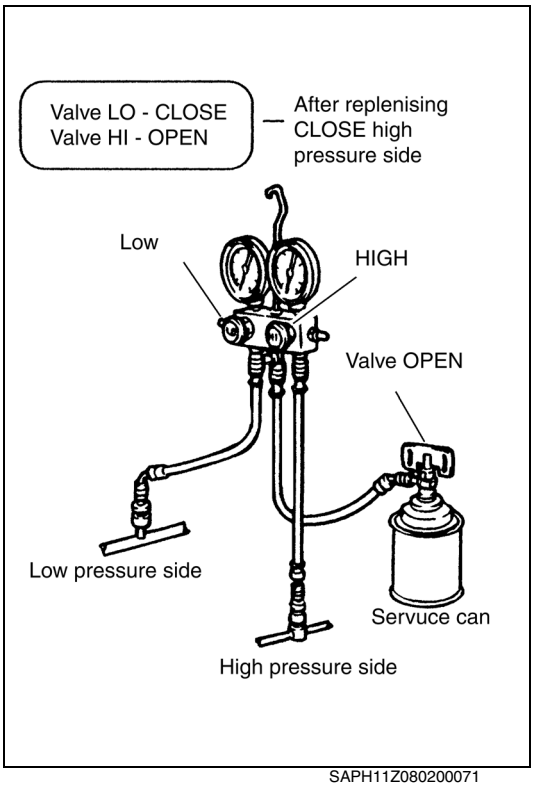


SAPH11Z080200071

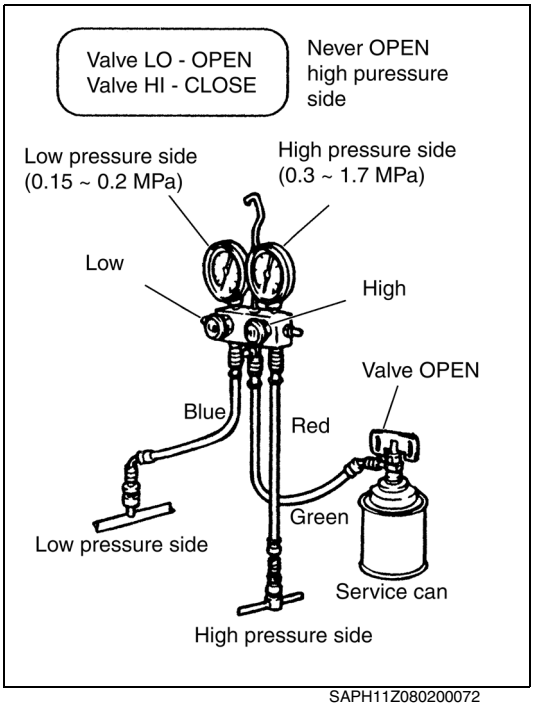


SAPH11Z080200072

(2) Replenish the refrigerant.

a. Supplying refrigerant from the high-pressure side

(a) With the engine stopped, open the gauge manifold high-pressure valve and the service can valve, and fill about one service can with refrigerant.

**NOTICE**

- **Never run the compressor at this time. Running the compressor is extremely dangerous because refrigerant will flow back into the hose or the service can, causing the hose to rupture or the can to burst.**
- **Do not run the compressor without any refrigerant in the system; otherwise, the compressor may seize.**
- **Do not open the gauge manifold low-pressure valve, for this will cause the liquid refrigerant to get sucked into the compressor, where it will be compressed and possibly damage the compressor valve.**

(b) Close the gauge manifold high-pressure valve and the service can valve.

b. Supplying refrigerant from the low-pressure side

(a) Make sure the gauge manifold high-pressure valve is closed.

(b) Set the following vehicle conditions.

- Turn on the engine and open all the vehicle doors.
- Turn the air conditioner on.
- Set the temperature control lever to the maximum cooling setting.
- Set the blower switch to the HI position.
- Run the engine at 1500rpm approximately.

(c) Open the gauge manifold low-pressure valve and the service can valve, supply the stipulated amount of refrigerant.

- Refrigerant quantity: 450 $\pm$ 50 g

(d) Once the refrigerant has been replenished, close the gauge manifold low-pressure valve and the service can valve and stop the engine.

**NOTICE**

- **Never open the gauge manifold high-pressure valve (HI) at this time. Opening the valve is extremely dangerous because it will cause high-pressure gas to flow back into the charging hose or the service can, causing the hose to rupture or the can to burst.**
- **Never turn the service can upside down. If the can is turned upside down, liquid refrigerant will get sucked into the compressor, where it will be compressed and possibly damage the compressor valve.**
  **Keep the can upright and supply refrigerant in a gaseous state.**

(3) Checking the amount of refrigerant supplied
a. Using the gauge manifold
(a) Set the following conditions.

- Open all the vehicle doors.
- Set the temperature control to the maximum cooling setting.
- Set the blower speed to the HI position.
- Set the outside air/room air selector lever to the room air position.
- Run the engine at 1500rpm.

**NOTICE**

- **Determination is made with the pressure on the high-pressure side no greater than 1.86 MPa (19 kgf/cm$^2$).**
- **If the outside air temperature is high (above 40 °C) and the pressure on the high-pressure side drops below 1.86 MPa (19 kgf/cm$^2$) when you are setting the judgment criteria:**

((a)) Open all the doors and set the blower speed to the LO position.
((b)) Use an indoor workplace or work outdoors in the shade. Carry out the procedure in steps 1 and 2 above and then determine the refrigerant quantity with the pressure no greater than 1.86 MPa (19 kgf/cm$^2$).
(b) Check the gauge manifold reading.

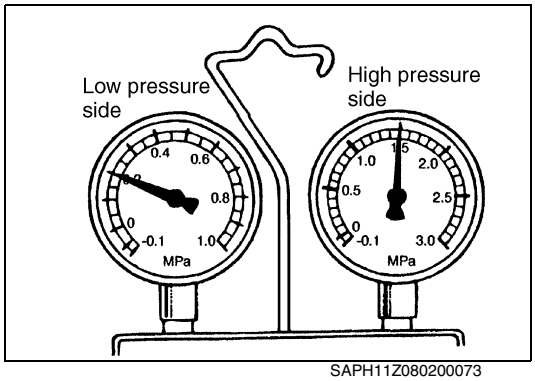

SAPH11Z080200073

- If it is normal
((a)) Pressure on low-pressure side 0.15—0.25 MPa (1.5—2.5 kgf/cm$^2$)
((b)) Pressure on high-pressure side 1.37—1.57 MPa (14—16 kgf/cm$^2$)

**NOTICE**

- **The gauge manifold reading may vary somewhat depending on conditions.**
- **Too much refrigerant can lead to problems such as faulty cooling or overheating.**

# MAINTENANCE

EN11Z0802H600001

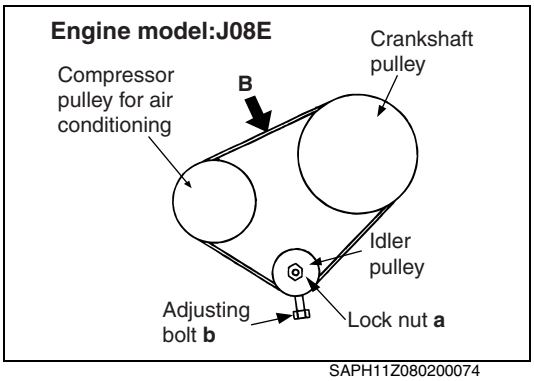


SAPH11Z080200074

## 1. ADJUSTING THE V-BELT TENSION

**⚠ CAUTION**

**After a new belt has been installed it may loosen during its initial break-in period. Run the engine for 3—5 minutes, therefore, and re-adjust the belt tension.**

(1) Loosen the idler pulley lock nut and adjust the V-belt tension (measuring point: B) until it is within the prescribed range, by turning the adjusting bolt with the special tool.
**SST:**
**Compression gauge (S0944-41210)**
**or belt tension gauge (Denso product No. 95506-00090)**

**Amount of deflection:**
**Use S0944-41210**

**Standard value 11 mm (0.434 in.) [Reference force applied to belt: 98 N (10kgf, 22lb)]**
**Tension: Use Denso product No. 95506-00090**
**Standard value: [330 N (34 kgf, 75 lbf)]**

(2) Tighten the idler pulley lock nut.
**Tightening Torque:**
**41 N·m (420 kgf·cm)**

(3) Make sure the adjusting bolt is tight and locked in place.
**Tightening Torque:**
**5.9 N·m (60 kgf·cm)**

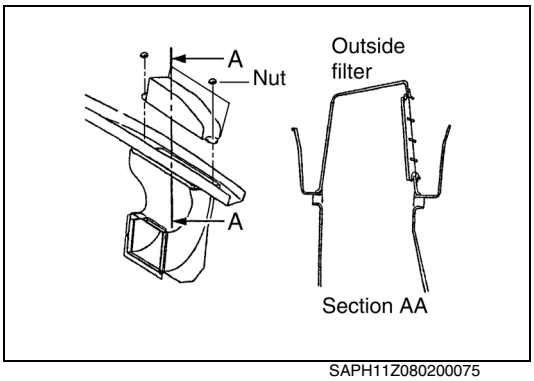


SAPH11Z080200075

## 2. CLEANING THE AIR FILTER

(1) Removing the outside air filter

(2) Removing the inside air filter
The air filter is located at the bottom of the blower assembly. Remove it by bending it and pushing it downward at the same time.

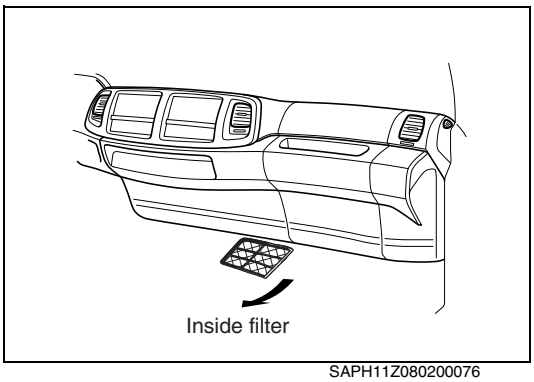


SAPH11Z080200076

(3) Cleaning the air filter

- Clean the filter every 5000 km.
- Set the starter key to the LOCK position. If the key is in the ON or ACC position, the wiper motor will operate and your fingers may get caught in the wiper linkage.
- Clean the air filter by washing it with water or blowing it with compressed air.
- If you wash the filter, make sure it is completely dry before you re-install it.

**3. WASHING THE CONDENSER**

(1) The condenser fins have to be washed periodically because problems such as reduced cooling efficiency and corrosion may occur if the fins are clogged with dirt or dust.

**⚠ CAUTION**

- **Make sure the air conditioner is off when you wash the condenser.**
- **Do not use a brush, for strong brushing may crush the fins.**
- **Wash the condenser carefully so that you do not damage the fins.**
- **Do not use a detergent.**
- **Give the condenser a thorough cleaning if the vehicle has been driven in coastal areas or on roads that have been salted to prevent freezing.**

# REPLACEMENT

EN11Z0802H100005

**1. REPLACING THE DRYING AGENT IN THE MODULATOR**

(1) Remove the filter with hexagon wrench and then take out and replace the drying agent.
The plastic screw cannot be re-used. Be sure to replace it with a new one.

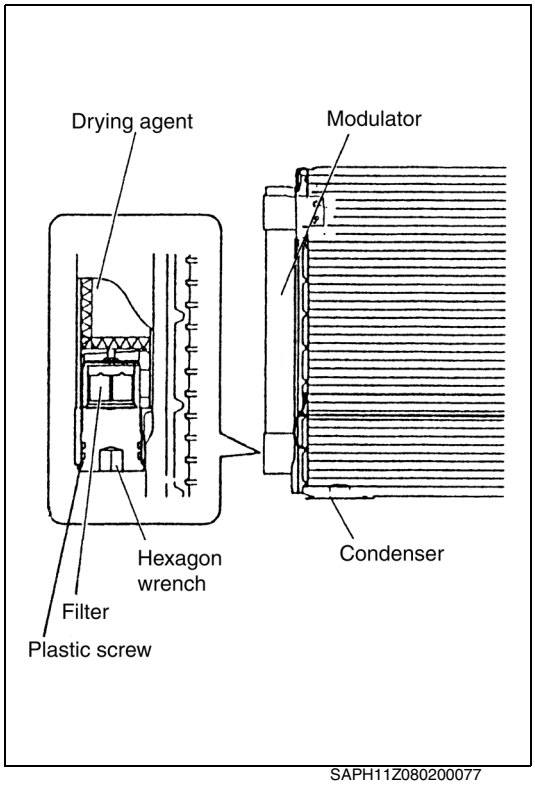


SAPH11Z080200077

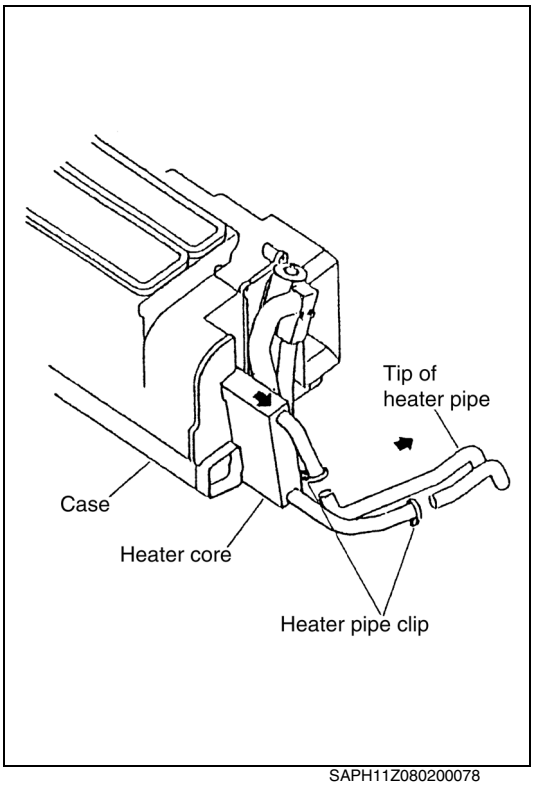


SAPH11Z080200078

**2. HVAC (HEATER AND A/C UNIT)**

(1) Replacing the heater core
- a. Remove the instrument panel center lower cover and AS lower cover.
- b. Remove the blower assembly.
- c. Remove the heater pipe clips and pull out the end of the heater pipe.
- d. Remove the heater core.

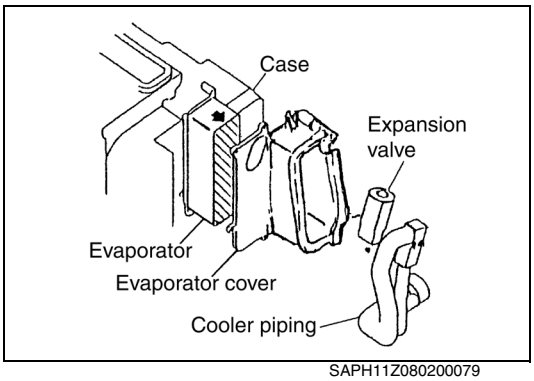


SAPH11Z080200079

(2) Replacing the evaporator
- a. Remove the instrument panel center lower cover and AS lower cover.
- b. Remove the blower assembly.
- c. Remove the HVAC.
- d. Remove the cooler piping (interior).
- e. Remove the bracket below the piping through-hole.
- f. Remove the expansion valve and cover.
- g. Remove the evaporator.

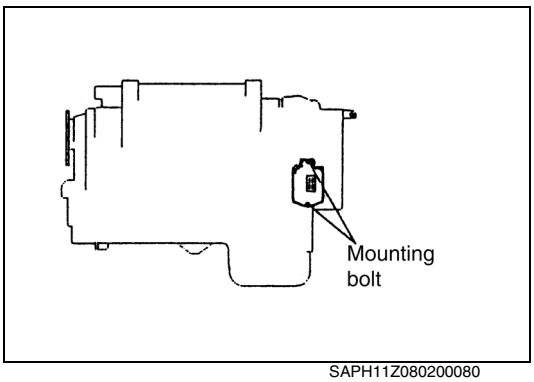


SAPH11Z080200080

(3) Replacing the blower resistor and power transistor
- a. Remove the two mounting bolts.

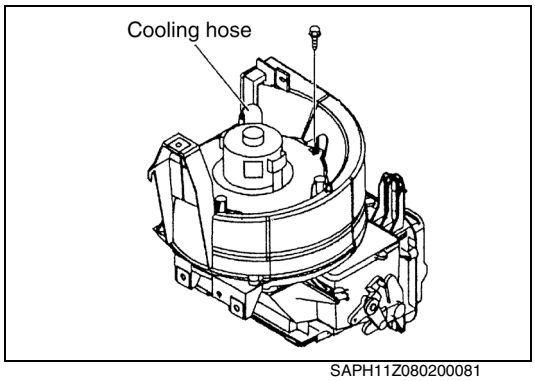

SAPH11Z080200081

**3. BLOWER ASSEMBLY**

(1) Replacing the motor
   a. Remove the cooling hose.
   b. Remove the three bolts holding the motor in place.

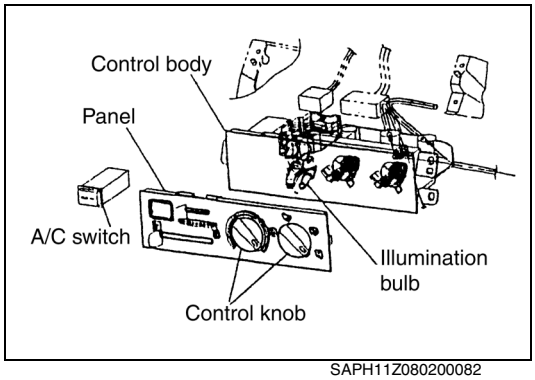

SAPH11Z080200082

**4. HEATER CONTROL**

(1) Replacing the illumination bulb
   a. Remove the center cluster.
   b. Remove the control knob and A/C switch.
   c. Remove the heater control panel (claw connection).
   d. Remove the illumination bulb.

# DISMOUNTING AND MOUNTING

EN11Z0802H100006

## IMPORTANT POINTS - MOUNTING

**NOTICE**

- **Should not bend the Inner cable when cable route.**
- **Set the cable at pulled state and make sure the link to boss. Set position is as follows.**

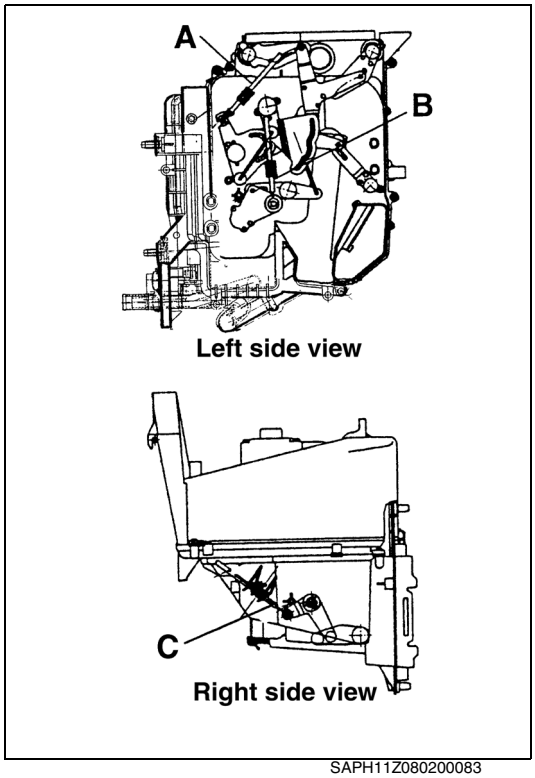

SAPH11Z080200083

| Cable | Color | Position |
|---|---|---|
| A: Mode control | BLUE | FACE |
| B: Temperature control | NATURAL | MAX COOL |
| C: Inside and outside air control | BLACK | OUTSIDE |

# WINDSHIELD

## COMPONENT LOCATOR

EN11Z0802D100009

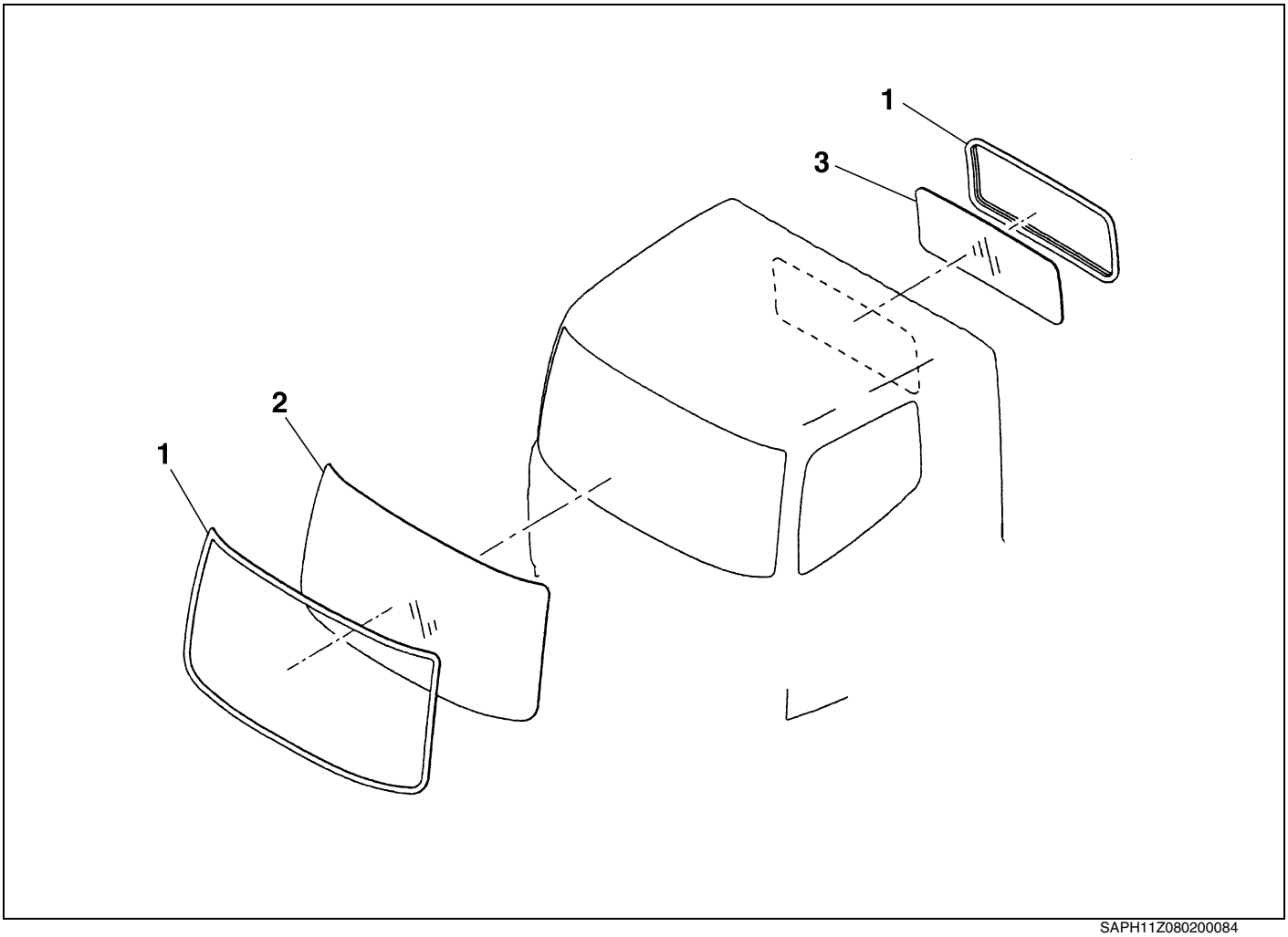


SAPH11Z080200084

| | | | |
|---|---|---|---|
| 1 | Weatherstrip | 3 | Back window |
| 2 | Windshield glass | | |

# REPLACEMENT

EN11Z0802H100007

**1. BEFORE REPLACING THE WINDSHIELD.**

(1) Remove the windshield wiper.

**2. REMOVE THE WINDSHIELD.**

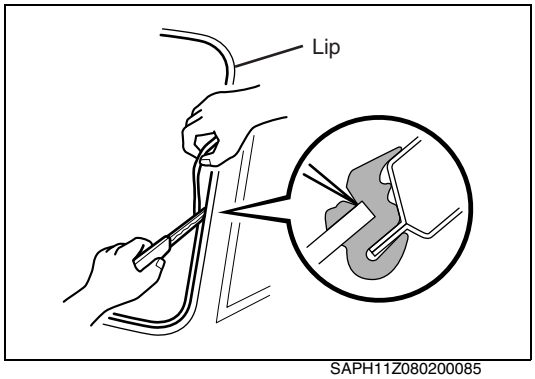


SAPH11Z080200085

(1) Cut the lip of the weatherstrip with a knife.

(2) The windshield is heavy so remove it using at least two persons.

**3. MOUNTING THE WINDSHIELD.**

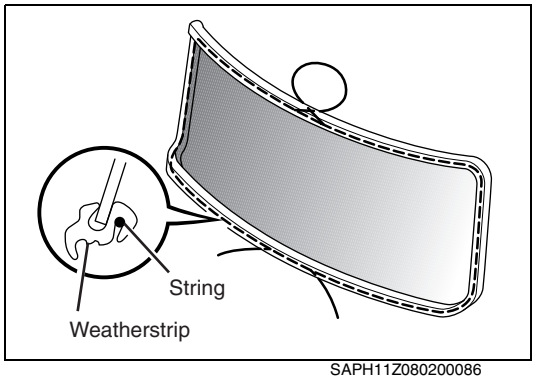


SAPH11Z080200086

(1) Clean the weatherstrip, mounting flange of cab and contact surface of the window.

(2) Repair any wavy area at the mounting flange as necessary.

(3) Insert the working string as shown in the figure.

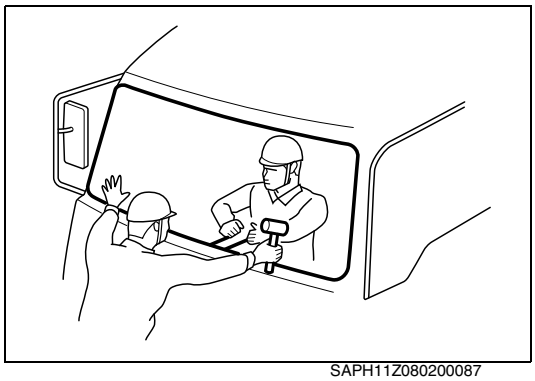

SAPH11Z080200087

(4) Pull the working string from the interior of the cab, and gradually install the lip of the weatherstrip on the mounting flange.

(5) During this operation, knock the glass from outside. Use soapy water as necessary.

(6) After installing the glass properly, knock the glass from inside and outside.

**4. INSTALL THE WINDSHIELD WIPER.**

(1) Install the wiper arm.

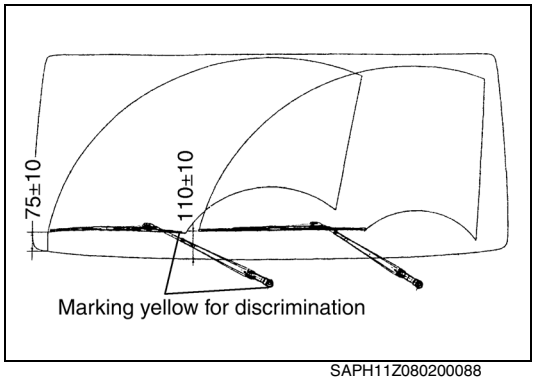


SAPH11Z080200088

# AFFIXING WEATHERSTRIP PROCEDURE

EN11Z0802H300003

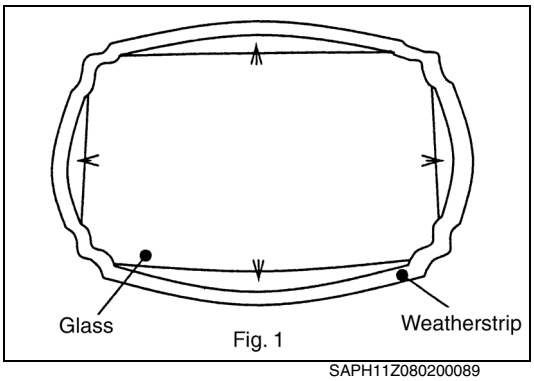

Fig. 1

SAPH11Z080200089

**1. REMOVE THE CORNER WINDSHIELD WEATHERSTRIPS (79413-1470A) FROM THE WINDSHIELD GLASS ASSY. (79410-2511A). (REFER TO FIGURE 1.)**

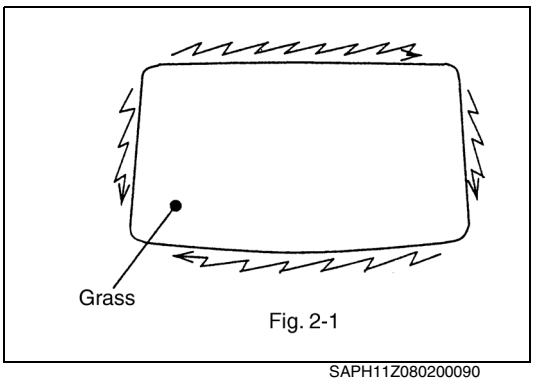

Fig. 2-1

SAPH11Z080200090

**2. CLEANING THE GLASS**
**Using a nap-free cloth or felt and a cleaning solvent, clean the glass flange areas where the weatherstrip has been removed, and remove grease, oil, water, dirt, and foreign substances from the joining surfaces. (Refer to Figures 2-1 and 2-2.)**

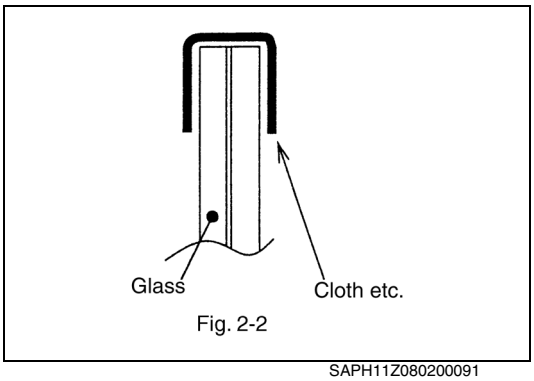

Fig. 2-2

SAPH11Z080200091

**NOTICE**

- **Cleaning solvent: (Isopropyl) alcohol**
- **Always keep the cleaning solvent in a clean container. Avoid the use of a cleaning solvent that is obviously dirty.**
- **For the cleaning cloth, use a clean cloth, gauze, felt, or other equivalent material that is free of stains.**
- **Always use a clean surface of the cleaning cloth and use a fresh cloth for every glass you clean.**
- **Add cleaning solvent to the cleaning cloth so that when the cloth is forcefully squeezed the solvent does not drip out.**

**3. CLEANING THE WEATHERSTRIP: GLASS SIDE AND BODY SIDE**
**Using a cloth and a cleaning solvent, clean the glass areas where the weatherstrip has been removed, removing grease, oil, water, dirt, and foreign substances.**

**NOTICE**

- **Cleaning solvent: (Isopropyl) alcohol**
- **Always keep the cleaning solvent in a clean container. Avoid the use of a cleaning solvent that is obviously dirty.**
- **For the cleaning cloth, use a clean cloth, gauze, felt, or other equivalent material that is free of stains.**
- **Always use a clean surface of the cleaning cloth and use a fresh cloth for every weatherstrip you clean.**
- **Add cleaning solvent to the cleaning cloth so that when the cloth is forcefully squeezed the solvent does not drip out.**

**4. DRY THE SOLVENT**
**After completing steps 2 and 3, allow the glass to dry for at least 3 minutes so that the cleaning solvent has fully dried.**

**NOTICE**
**After the cleaning solvent has been applied (and while it is drying), be careful not to allow oil, water, dirt, or foreign substances to stick to the solvent.**

**5. APPLYING PRIMER: GLASS AND WEATHERSTRIP (GLASS SIDE AND BODY SIDE)**
**Apply a uniform coat of primer to the indicated area.**

**NOTICE**
- **After applying the primer, make sure oil, water, or foreign substances do not stick to the primer.**
- **Primer: Sika Activator, made by Japan Sika Co., Ltd.**
- **Application temperature range: +5°C—+25°C**
- **Storage method: Keep primer in a sealed container in a cool, dark place.**
- **Storage period: 12 months (unopened)**
  **Use primer within one month after it has been opened.**

**6. WIPE THE PRIMED AREA WITH A DRY CLOTH WITHIN 30 SECONDS AFTER APPLYING THE PRIMER.**

**7. AFTER WIPING THE PRIMER WITH A DRY CLOTH, ALLOW IT TO DRY FOR AT LEAST 10 MINUTES (IF THE TEMPERATURE IS 15°C OR HIGHER) OR 30 MINUTES (IF THE TEMPERATURE IS BELOW 15°C).**

**NOTICE**
**Be careful not to allow water, dirt, or foreign substances to stick to the primed surface.**

**8. FIT THE REMOVED WEATHERSTRIP ONTO THE GLASS (as it was prior to the start of work.)**

**9. APPLYING ADHESIVE: GLASS AND WEATHERSTRIP**
**Apply adhesive between the glass and the weatherstrip. (For details, refer to the assembly diagram.)**

**NOTICE**
- **Do not use an adhesive whose expiration date has passed.**
- **Storage conditions: 0 - 40°C, indoor storage**
- **Adhesive: Silkaflex 250-2**
- **Apply a suitable amount of adhesive to the range indicated in the diagram (so that adhesive sticks out from the edge of the weatherstrip).**
- **With the weatherstrip securely fitted on the glass, proceed to the next task (check and repair, including corners).**

**10. WASHING OFF THE ADHESIVE: GLASS SIDE**
**Remove the adhesive and primer sticking out from the edge of the weatherstrip.**
(1) Scrape off adhesive with a pallet knife.
(2) Wipe the scraped area with a cloth dipped in a cleaning agent.

**NOTICE**
- **Work as quickly as possible.**
- **Use a clean cloth or equivalent material and use a clean surface of the cloth at all times.**

**11. CLEANING THE BODY**
**Using a cloth dipped in a cleaning solvent, clean the area where the weatherstrip and glass have been removed, and remove grease, oil, water, dirt, and foreign substances.**

**NOTICE**

- **Cleaning solvent: (Isopropyl) alcohol**
- **Always keep the cleaning solvent in a clean container. Avoid the use of a cleaning solvent that is obviously dirty.**
- **For the cleaning cloth, use a clean cloth, gauze, felt, or other equivalent material that is free of stains.**
- **Always use a clean surface of the cleaning cloth and use a fresh cloth for every weatherstrip you clean.**
- **Add cleaning solvent to the cleaning cloth so that when the cloth is forcefully squeezed the solvent does not drip out.**
- **Before cleaning, remove adhesive or weatherstrip stuck to the body.**

**12. APPLYING PRIMER: BODY SIDE**
**Apply a uniform coat of primer to the indicated area.**

**NOTICE**

- **After applying the primer, make sure oil, water, or foreign substances do not stick to the primer.**
- **Primer: Sika Activator, made by Japan Sika Co., Ltd.**
- **Application temperature range: +5°C—+25°C**
- **Storage method: Keep primer in a sealed container in a cool, dark place.**
- **Storage period: 12 months (unopened) Use primer within one month after it has been opened.**

**13. WIPE THE PRIMED AREA WITH A DRY CLOTH WITHIN 30 SECONDS AFTER APPLYING THE PRIMER.**

**14. AFTER WIPING THE PRIMER WITH A DRY CLOTH, ALLOW IT TO DRY FOR AT LEAST 10 MINUTES (IF THE TEMPERATURE IS 15°C OR HIGHER) OR 30 MINUTES (IF THE TEMPERATURE IS BELOW 15°C).**

**NOTICE**
**Be careful not to allow water, dirt, or foreign substances to stick to the primed surface.**

**15. APPLYING LUBRICANT**
**Apply a lubricant for installation to the body flange.**

**NOTICE**

- **Use a detergent as the lubricant.**
- **Do not allow detergent to get on the surfaces where adhesive has been applied.**

**16. FIT THE GLASS IN PLACE ON THE BODY.**

**17. APPLYING ADHESIVE: WEATHERSTRIP AND BODY**

**Apply adhesive between the body and the weatherstrip. (For details, refer to the assembly diagram.)**

**NOTICE**

- **Do not use an adhesive whose expiration date has passed.**
- **Storage conditions: 0—40°C, indoor storage**
- **Adhesive: Silkaflex 250-2**
- **Apply a suitable amount of adhesive to the area indicated in the diagram (so that adhesive sticks out from the edge of the weatherstrip).**

**18. WASHING OFF THE ADHESIVE: BODY SIDE**

**Remove the adhesive and primer sticking out from the edge of the weatherstrip.**

(1) Scrape off adhesive with a pallet knife.
(2) Wipe the scraped area with a cloth dipped in a cleaning agent.

**NOTICE**

- **Work as quickly as possible.**
- **Use a clean cloth or equivalent material and use a clean surface of the cloth at all times.**

# FRONT BUMPER

## COMPONENT LOCATOR

EN11Z0802D100010

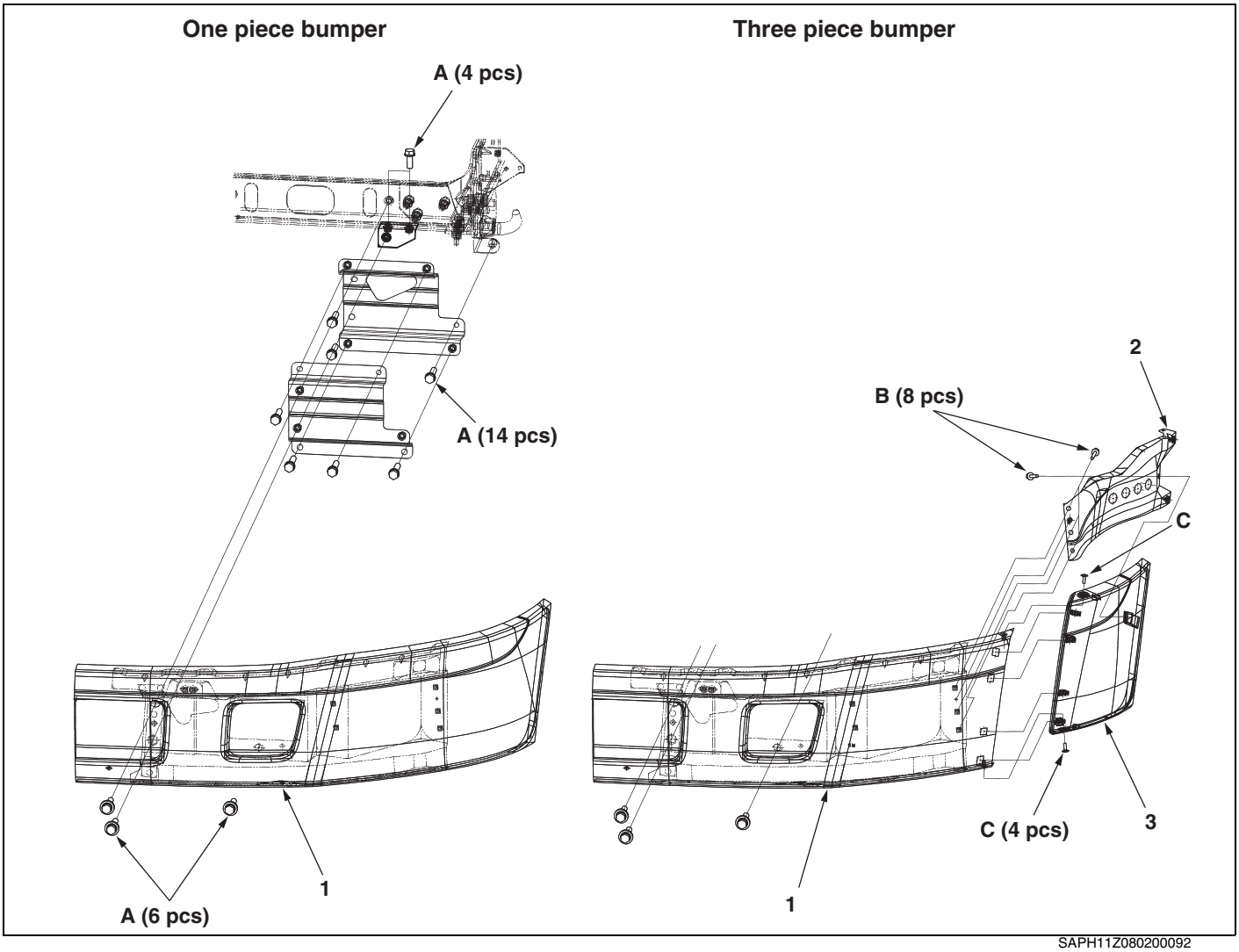


SAPH11Z080200092

| | | | |
|---|---|---|---|
| 1 | Bumper sub assembly | 3 | Corner bumper |
| 2 | Bumper stay | | |

**Tightening torque** **Unit: N·m {kgf·cm, lbf·ft}**

| | | | |
|---|---|---|---|
| A | 104-156 {1061-1592, 77-115} | C | 3-7 {31-71, 2-5} |
| B | 13-29 {133-296, 10-21} | | |

# ELECTRICAL EQUIPMENT

EL01-001

**ELECTRICAL PARTS ..... EL01-2**
DATA AND SPECIFICATIONS ..... EL01-2
COMPONENT LOCATOR ..... EL01-3
TROUBLESHOOTING ..... EL01-12
GENERAL INSTRUCTION ..... EL01-13
HANDLING PRECAUTION ..... EL01-18
INSPECTION ..... EL01-19
INSPECTION AND ADJUSTMENT ..... EL01-37
SPEEDOMETER
CONVERSION RATE LIST ..... EL01-38

# ELECTRICAL PARTS

## DATA AND SPECIFICATIONS

EN12Z0801I200001

### ELECTRICAL SYSTEM

| | |
|---|---|
| Voltage | Direct current 12 volts |
| Ground | Negative (-) ground |

### BULB WATTAGE RATING

| | | |
|---|---|---|
| Head light | | 60/55 W |
| Clearance light and Identification light | LED TYPE | 1.54 W (Replace with unit) |
| Front turn signal light / Parking and front side marker light | | 27/8 W |
| Front side turn signal light | | 5 W |
| Dome light | | 8 W |
| Rear turn signal and Stop / Tail light and license plate light | | 27/8 W |
| Back-up light | | 27 W |

### GAUGE TYPE

| | |
|---|---|
| Fuel | Coil type |
| Coolant temperature | Coil type |
| Tachometer | Coil type |
| Speedometer | Coil type |
| Air pressure | Coil type |

# COMPONENT LOCATOR

EN12Z0801D100001

## PARTS INSTALLED POSITION

| PARTS | INSTALLED | PARTS | INSTALLED |
|---|---|---|---|
| Automatic transmission starter relay | Fuse and relay block, behind the instrument panel lower RH cover | Power accessory relay No.2 (Fuel heater relay) | Relay block, side of the batteries |
| Daytime running light relay | | Starter relay | |
| Head light dimmer relay | | Automatic transmission back light relay | |
| Head light main relay | | Glow control unit | |
| Horn relay | | ABS ECU (Full air brake) | ECU lack, behind the instrument panel lower RH cover |
| Air horn relay | | Daytime running light ECU | |
| Mirror heater relay (If so equipped) | | Turn signal flasher | |
| Power accessory relay | | Vehicle control ECU | |
| Power relay No.1 | | Windshield wiper controller | |
| Power relay No.2 | | Combination meter | Meter cluster |
| Power relay No.3 | | Light and turn switch | Steering column |
| Power relay No.4 | | Starter switch | |
| Tail light relay No.1 | | Wiper and retarder switch | |
| Tail light relay No.2 | | Horn switch | Steering wheel |
| Air suspension dump relay 3 | | Air suspension dump switch | Switch board panel, under the combination meter |
| Air suspension dump relay 4 | | Cruise control main switch | |
| Parking brake buzzer off relay | | Rheostat | |
| DEF-Parking brake buzzer off relay | | Set/resume switch | |
| ABS exhaust brake cut relay | | Air horn switch | |
| ABS warning light relay | | Economy running switch | |
| Engine ECU main relay | | AT mode switch | |
| Engine ECU actuator power relay | | Multi indicator switch | |
| Starter cut relay | | Mirror heater switch | |
| Vehicle control actuator power relay | | DPR refresh switch | |
| DEF heater relay | | Spare power source | Behind the instrument panel lower center cover |
| | | Blower motor | |

| PARTS | INSTALLED | PARTS | INSTALLED |
|---|---|---|---|
| Door lock controller | Behind the instrument panel lower center cover | Dome light LH | Roof inside |
| Heater and cooler unit | | Dome light RH | |
| Monitor module (HYDRO-MAX brake) | | Back mirror light (If so equipped) | Back mirror |
| Water level warning relay | | Mirror heater LH (If so equipped) | |
| Courtesy switch front LH | Cab rear pillar | Mirror heater RH (If so equipped) | |
| Courtesy switch front RH | | Water temperature sensor 1 | Engine front side |
| Air conditioner switch | Instrument panel | Water temperature sensor 2 | |
| Blower switch | | Boost sensor | Engine left side |
| Cigarette lighter | | EGR valve | |
| Differential lock switch | | Glow plug | |
| Van light switch | | Injector | |
| DPR manual regeneration switch | | Fuel pressure sensor | |
| Remote control mirror switch | | Diesel throttle valve | |
| Radio/Audio unit | | Engine ECU | |
| Diagnosis connector | Around the pedal bracket | Intake manifold temperature sensor | |
| DST-1 Connector | | Intercooler exit temperature sensor | |
| Clutch interlock switch | | EGR exit temperature sensor | |
| Exhaust clutch switch | | Starter | |
| Stop light switch | | Suction control valve | |
| ABS Diagnosis switch | | VNT controller | |
| Accelerator sensor | | Block heater (If so equipped) | |
| Wiper motor | Front panel | Fuel cut valve | |
| Button selector or Lever selector (ALLISON 3000RDS) | Automatic transmission selector console | Fuel temperature sensor | |
| Automatic transmission mode switch (ALLISON 2200/2500HS, 2200/ 2500RDS automatic transmission) | | Oil pressure switch | Engine right side |
| | | VNT actuator | |
| | | Exhaust aftertreatment pressure sensor | |
| | | Exhaust temperature sensor 1 (ATC upstream)<br>Exhaust temperature sensor 2 (ATC downstream) | |
| Parking brake switch | Parking brake lever | Alternator | |
| Washer motor | Washer tank | Air gauge sensor (front and rear) (Full air brake) | Air tank |

| PARTS | INSTALLED | PARTS | INSTALLED |
|---|---|---|---|
| Power window motor (Driver seat) (If so equipped) | Door | ABS modulator (HYDRO-MAX brake) | Frame, inside of the side rail LH, at cab back |
| Power window motor (Passenger seat (If so equipped)) | | Air dryer (Full air brake) | |
| Door lock motor | | Spare power source (Tail) 2 | Frame, inside of the side rail RH, at the 3rd crossmember |
| Cylinder angle sensor | Engine rear side | Modulator front (LH RH) (Full air brake) | Frame, outside of the side rail, at front axle |
| NE sensor | | | |
| Air flow sensor | Air cleaner | ABS sensor front (LH RH) (Full air brake) | |
| Intake air temperature sensor | | | |
| Horn | Radiator LH side | ABS sensor front (LH RH) (HYDRO-MAX brake) | |
| Coolant level switch | Radiator upper tank | | |
| Antenna | Roof outside | Modulator front LH (Full air brake) | Frame, outside of the side rail LH, at front axle |
| Identification light center | | ABS sensor front LH (Full air brake) | |
| Identification light (LH RH) | | ABS sensor front LH (HYDRO-MAX brake) | |
| Roof clearance light (LH RH) | | Back-up buzzer | Frame, inside of the side rail LH |
| Front turn light (LH RH) | Hood | Engine speed sensor | 2200/2500HS, 2200/2500RDS automatic transmission |
| Head light (LH RH) | | Automatic transmission unit | |
| Side turn light (LH RH) | | Neutral start backup switch | |
| Back-up light switch (EATON MTM) | Manual transmission | Output speed sensor | |
| Neutral switch (EATON MTM) | | Turbine speed sensor | |
| Speed sensor (EATON MTM) | | ALLISON automatic transmission ECU | Frame, No.3 crossmember |
| ALLISON 2200/2500HS, 2200/2500RDS automatic transmission ECU | Frame, No.3 crossmember | Spring brake switch (Full air brake) | Valve at rear of chassis |
| Fuel filter water level sensor (If so equipped) | Fuel filter, outside of the frame side rail LH at cab back | Buzzer off switch (Full air brake) | |
| Fuel filter heater | | Differential lock magnetic valve | Chassis |
| Fuel sender | Fuel tank | Air suspension dump magnetic valve | |

| PARTS | INSTALLED | PARTS | INSTALLED |
|---|---|---|---|
| Engine speed sensor | 3000RDS , 3500RDS automatic transmission | Dosing control unit | DEF system |
| Output speed sensor | | DEF injector | |
| Automatic transmission unit | | DEF pump | |
| Differential switch | HYDRO-MAX unit, pedal bracket outside | DCU | |
| Flow switch | | Dosing module | |
| Motor pump (HYDRO-MAX brake) | | Fuel pump | |
| Motor relay (HYDRO-MAX brake) | | DEF level sensor | |
| Rear combination light (LH RH) | Frame, outside of the side rail rear end | Coolant cut off valve | |
| Modulator rear (LH RH) (Full air brake) | Frame, outside of the side rail, at rear axle | NOx sensor | |
| ABS sensor rear (LH RH) (Full air brake) | | PM sensor | |
| ABS sensor rear (LH RH) (HYDRO-MAX brake) | | Ambient temperature sensor | |

## ECU RACK

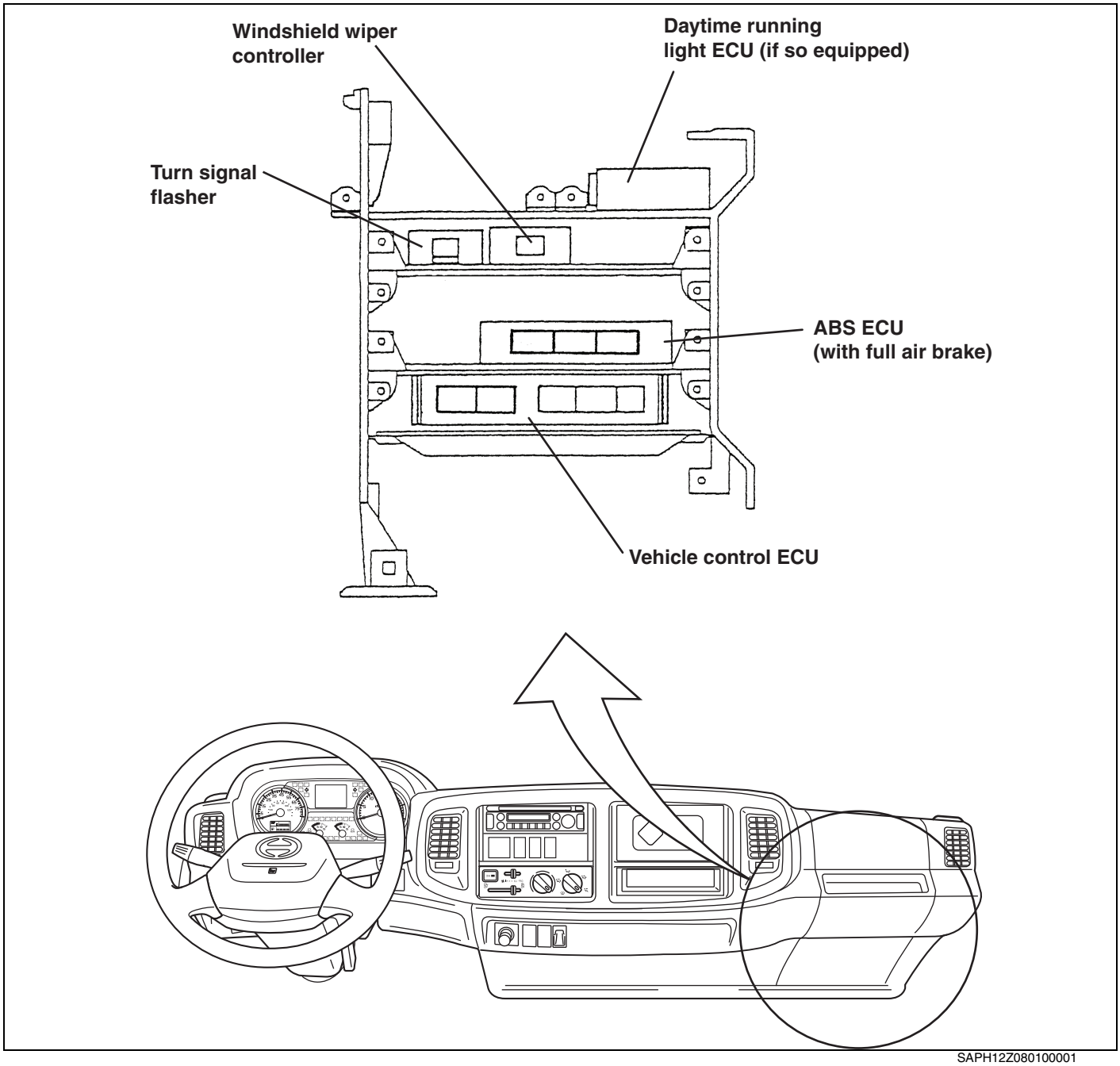


SAPH12Z080100001

## INSTRUMENT PANEL LOWER CENTER

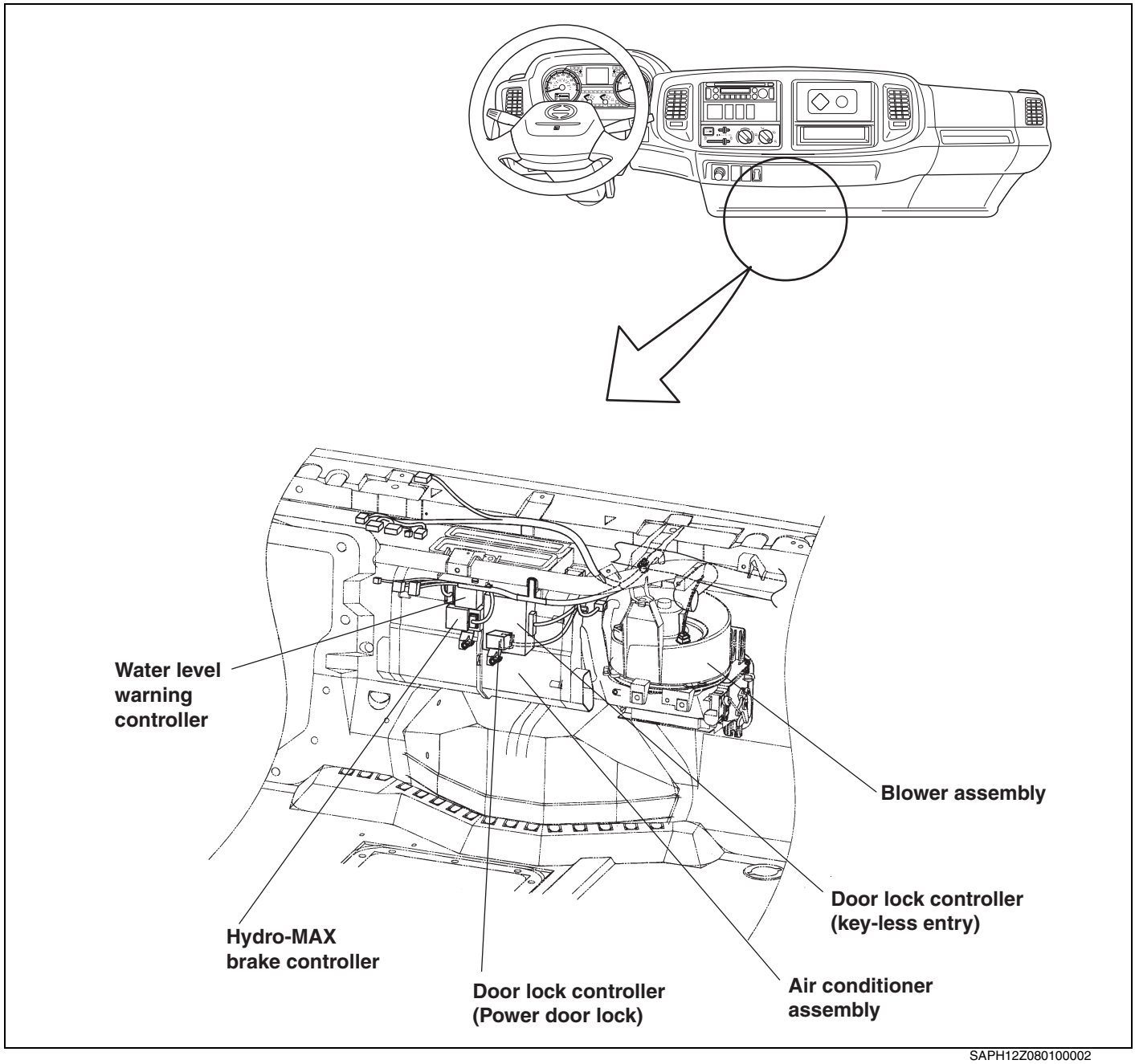


SAPH12Z080100002

## RELAY PANEL

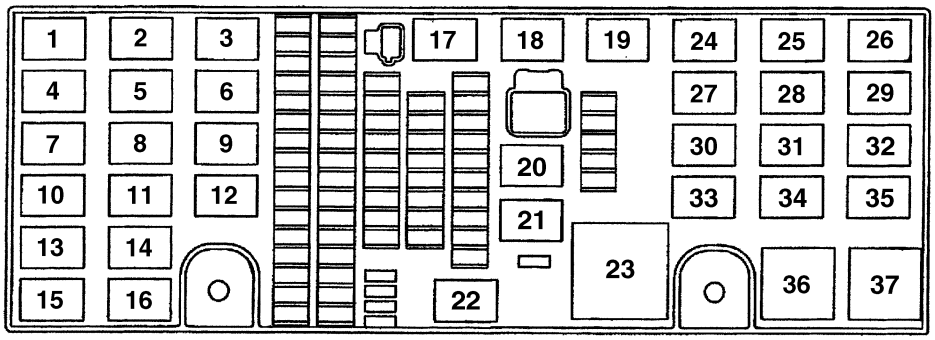


SAPH12Z080100003

| | | | |
|---|---|---|---|
| 1 | Daytime running light relay | 20 | Tail light relay No.1 |
| 2 | Head light dimmer relay | 21 | Tail light relay No.2 |
| 3 | Head light main relay | 22 | Empty |
| 4 | Air suspension dump relay 3 | 23 | Empty |
| 5 | Air horn relay | 24 | Power relay No.3 |
| 6 | Horn relay | 25 | Power accessory relay |
| 7 | Air suspension dump relay 4 | 26 | Power relay No.4 |
| 8 | Air conditioner relay | 27 | Automatic transmission NC relay |
| 9 | Heater relay (Air conditioner) | 28 | Empty |
| 10 | ABS exhaust brake cut relay | 29 | Empty |
| 11 | ABS warning light relay (with HYDRO-MAX brake E version) | 30 | Automatic transmission dummy relay |
| 12 | DEF heater relay | 31 | Starter cut relay |
| 13 | Empty | 32 | Vehicle control actuator power relay |
| 14 | Mirror heater relay (If so equipped) | 33 | Engine ECU main relay |
| 15 | Parking buzzer off relay | 34 | Engine ECU actuator power relay |
| 16 | Automatic transmission (Allison) starter relay | 35 | Empty |
| 17 | Power relay No.1 | 36 | Empty |
| 18 | Empty | 37 | Empty |
| 19 | Power relay No.2 | | |

## POSITION OF THE POWER SUPPLY TERMINAL FOR EXTRA EQUIPMENT (CAB SIDE)

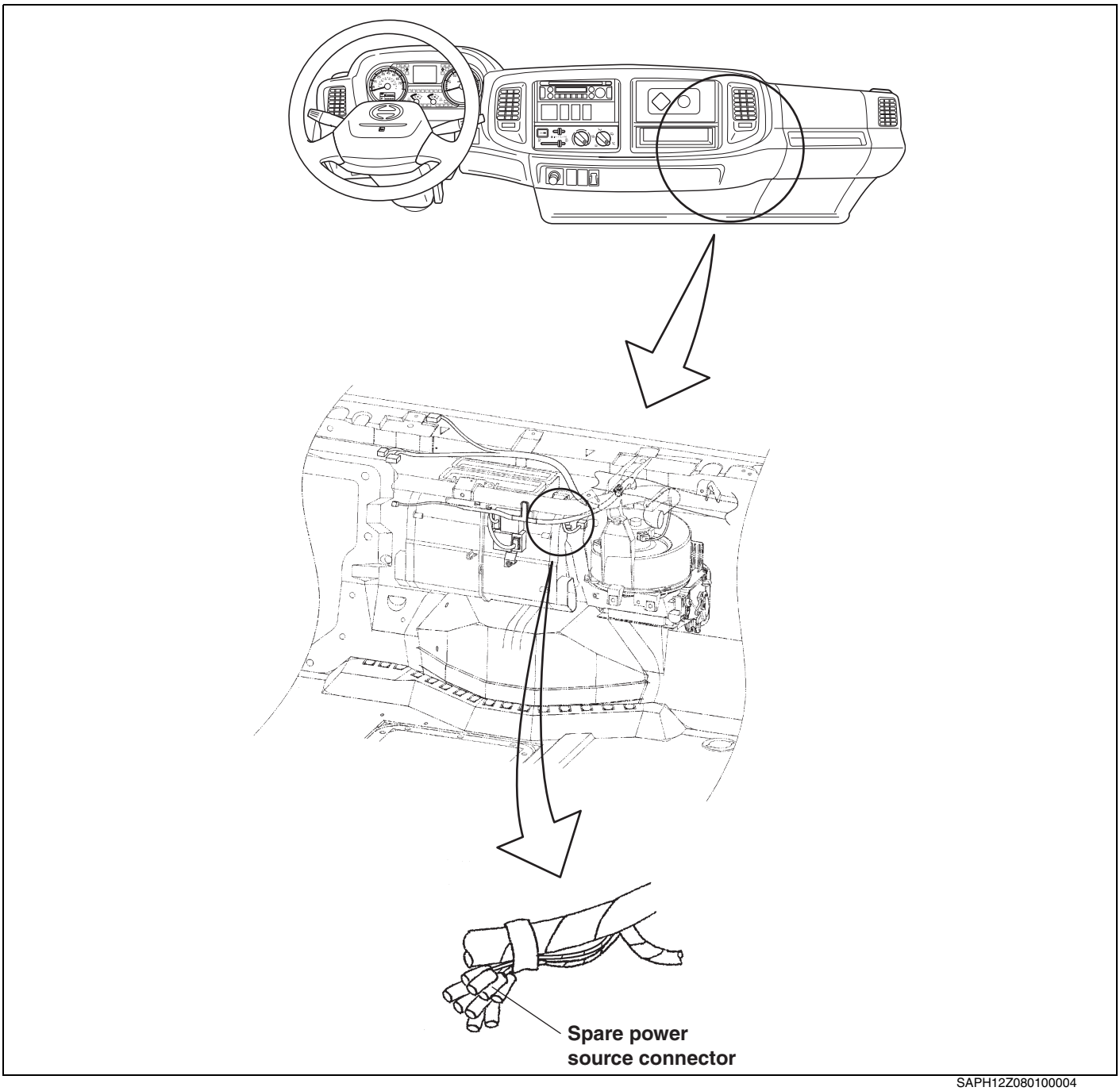


SAPH12Z080100004

## POSITION OF THE POWER SUPPLY TERMINALS FOR EXTRA EQUIPMENT (CHASSIS SIDE)

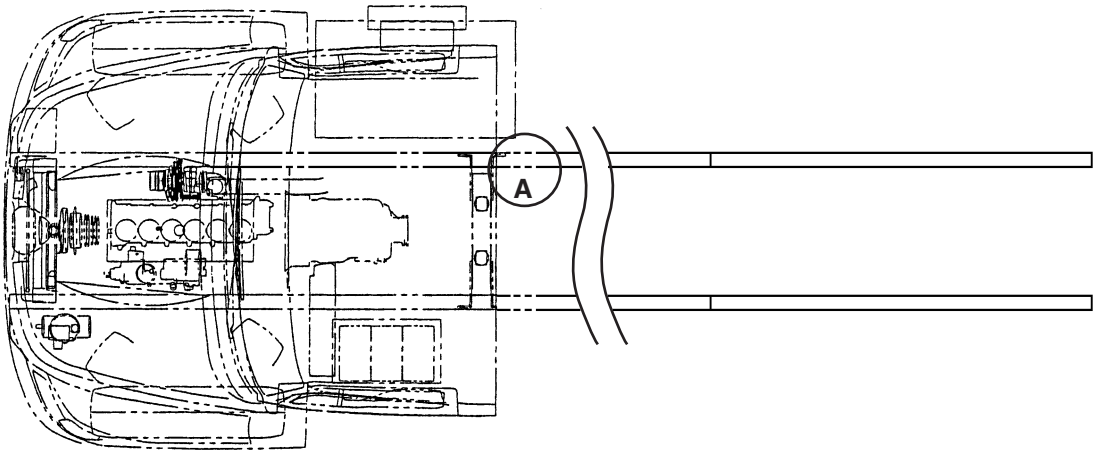


**Detail A**

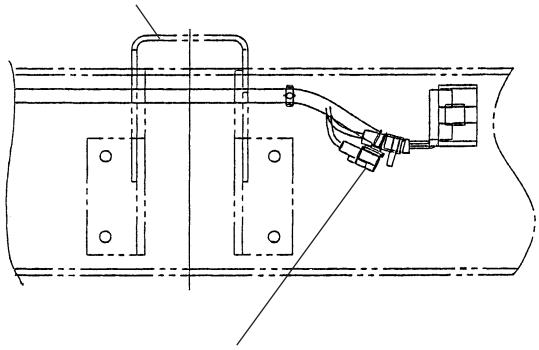


SAPH12Z080100005

# TROUBLESHOOTING

EN12Z0801F300001

## STARTING SYSTEM

| Symptom | Possible cause | Remedy/Prevention |
|---|---|---|
| **Engine does not operate (Starter switch)** | Poor contact condition | Clean or replace contacts. |
| **Engine does not operate (Battery)** | Open circuit in harness | Check and correct. |
| | Short circuit between electrodes | Replace battery. |
| | Poor contact condition of battery terminal | Clean or retighten. |
| **Engine does not operate (Engine oil)** | Improper viscosity oil | Change oil. |
| **Engine does not operate (Starter relay)** | Defective or poor contact of starter relay | Repair or replace. |
| **Engine does not operate (Starter)** | Starter does not operate | Repair or replace. Refer to chapter **"STARTER"**. |

## HEAD LIGHT CIRCUIT

| Symptom | Possible cause | Remedy/Prevention |
|---|---|---|
| **Head light does not turn on (Head light)** | Bulb burned out | Replace bulb. |
| | Not grounded | Check the grounding. |
| | Broken wire | Repair wire. |
| **Head light does not turn on (Fuse)** | Fuse burned out | Replace fuse. |
| **Head light does not turn on (Head light relay)** | Defective relay | Replace relay. |
| **Head light does not turn on (Lighting switch)** | Broken wire between relay and switch | Repair wire. |
| | Defective switch | Replace switch. |

## TURN SIGNAL CIRCUIT

| Symptom | Possible cause | Remedy/Prevention |
|---|---|---|
| **Turn signal does not work (Turn signal light)** | Bulb burned out | Replace bulb. |
| | Not grounded | Check the grounding. |
| | Broken wire | Repair wire. |
| **Turn signal does not work (Fuse)** | Fuse burned out | Replace fuse. |
| **Turn signal does not work (Turn signal flasher)** | Not grounded | Check the grounding. |
| | Defective flasher | Replace flasher. |
| **Turn signal does not work (Turn signal switch)** | Broken wire between fuse and switch | Repair wire. |
| | Defective switch | Replace switch. |

## TAIL AND LICENSE PLATE LIGHT CIRCUIT

| Symptom | Possible cause | Remedy/Prevention |
|---|---|---|
| **Tail and license plate light does not turn on (Light)** | Bulb burned out | Replace bulb. |
| | Not grounded | Check the grounding. |
| | Broken wire | Repair wire. |
| **Tail and license plate light does not turn on (Fuse)** | Fuse burned out | Replace fuse. |
| **Tail and license plate light does not turn on (Tail light relay)** | Defective relay | Replace relay |
| **Tail and license plate light does not turn on (Lighting switch)** | Broken wire between fuse and switch | Replace wire. |
| | Defective switch | Replace switch. |

# GENERAL INSTRUCTION

EN12Z0801C100001

**⚠ CAUTION**
**Be sure to disconnect the ground cable before servicing the electrical circuits except for testing on-vehicle.**

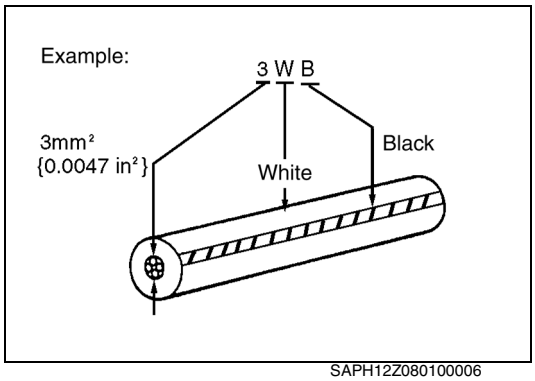

SAPH12Z080100006

**1. WIRING CODE**

(1) Wiring colors are indicated by a code.

| | | | |
|---|---|---|---|
| B | : Black | LG | : Light green |
| BR | : Brown | O | : Orange |
| DG | : Dark gray | R | : Red |
| G | : Green | V | : Violet |
| GR | : Gray | W | : White |
| L | : Blue | Y | : Yellow |
| P | : Pink | | |

(2) The first letter indicates the ground wire color and second letter indicated the strip color.

(3) Arabic numerals indicates the cross sectional area of wire.
**Example: 3 indicates 3 $mm^2$ {0.0047 $in^2$}**

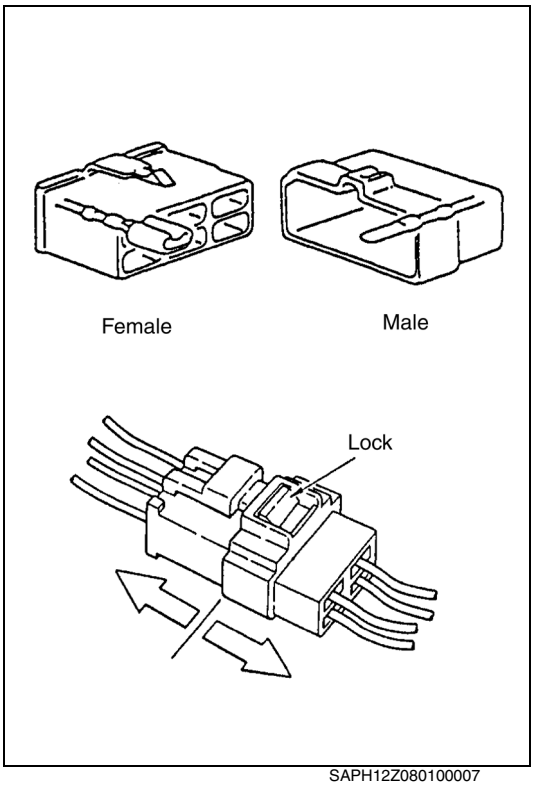


SAPH12Z080100007

**2. CONNECTOR**

(1) The connector consists of the male and female connectors.
Male and female connectors are classified according to the shape of the terminals in the connector.
Male and female connectors are provided with a lock, so that they can not be separated easily.
To separate the connectors, unlock the lock, then hold one connector with one hand and the other one with the other hand, and pull each other.

**NOTICE**

**When the connector is disconnected by pulling the wires, the connection between the terminals and the wires will be damaged.**

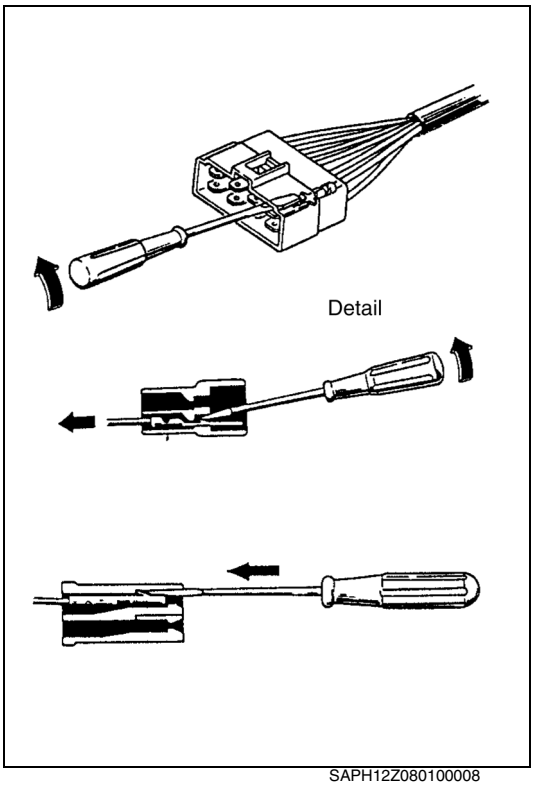


SAPH12Z080100008

(2) Removing the terminal from the connector.
   a. Insert a miniature screwdriver or a terminal puller between terminal and connector, and unlock the lock between terminal and connector.
   b. When the lock has been released, pull the wire to remove the terminal.

(3) Installing the terminal in the connector.
   a. Insert the terminal into the connector until it clicks.
   b. Pull the wire to confirm correct lock engagement

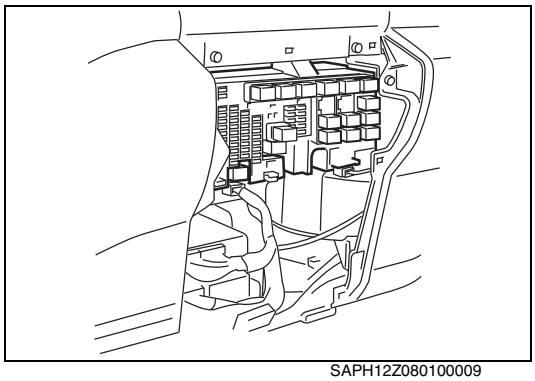

SAPH12Z080100009

### 3. FUSE

(1) The power supply must be switched off for fuse replacement.
Use a proper amperage fuse.

**NOTICE**

**Wire burning may be caused when a fuse with an excessively large current capacity is used.**
**If the fuse should blow frequently, investigate the cause and correct it.**

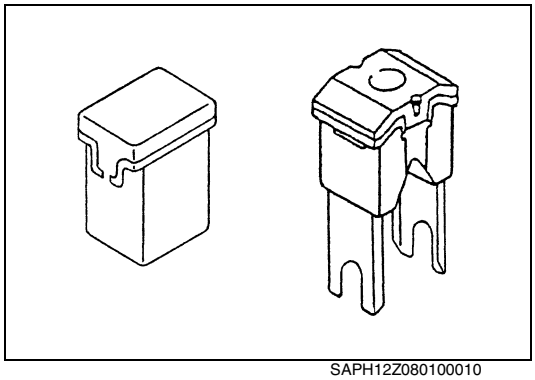

SAPH12Z080100010

### 4. FUSIBLE LINK

(1) The cause of an overload current should be determined and corrected before a melted fusible link is replaced.
A melted fusible link can be determined by swollen or melted insulation of the link.

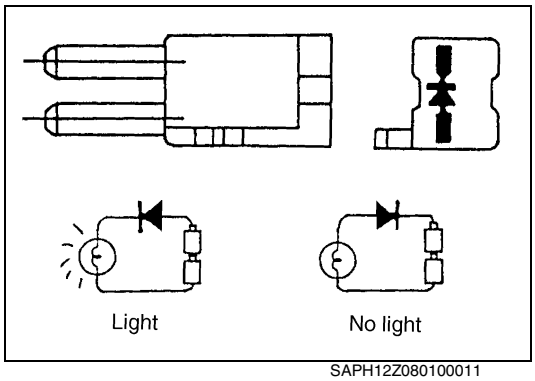


SAPH12Z080100011

### 5. DIODE

(1) Diode allows the flow of electric current in only one direction.

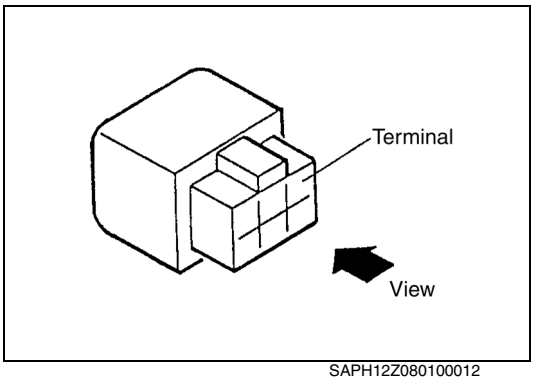

SAPH12Z080100012

## RELAY (TYPE, NAME AND INSPECTION)

| | |
|---|---|
| TYPE-1: | Tail light relay No.1 |
| | Tail light relay No.2 |
| | Power accessory relay |
| | Power relay No.1 |
| | Power relay No.2 |
| | Power relay No.3 |
| | Power relay No.4 |
| | Automatic transmission starter relay |
| | Head light main relay |
| | Head light dimmer relay |
| | Daytime running light relay |
| | Mirror heater relay |
| | Air horn relay |
| | Horn relay |
| | Heater relay |
| | Engine ECU main relay |
| | Engine ECU actuator power relay |
| | Automatic transmission back light relay |
| | Automatic transmission stop dummy relay |
| | DEF heater relay |
| TYPE-2: | Air conditioner relay |
| | Vehicle control actuator power relay |
| TYPE-3: | Fuel heater relay (Power accessory relay No.2) |
| TYPE-4: | Starter relay |
| TYPE-5: | Stop light relay |
| TYPE-6: | ABS exhaust brake cut relay |
| | ABS warning light relay |
| | Parking buzzer off relay |
| | Starter cut relay |
| | Air suspension dump relay 3 |
| | Air suspension dump relay 4 |
| | Automatic transmission stop NC relay |

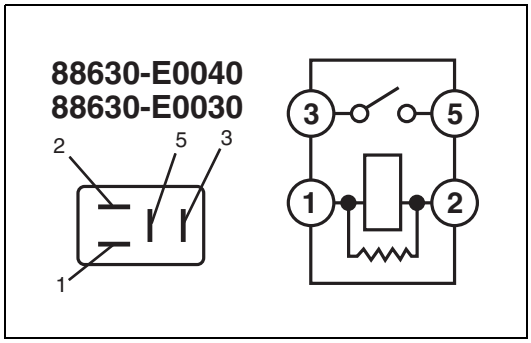

SAPH12Z080100013

**1. TYPE-1 AND TYPE-2 INSPECTION**

(1) Apply voltage to terminals;
12 V to terminal 1,
Ground to terminal 2.

(2) Under normal condition, terminals 3 and 5 switch on.

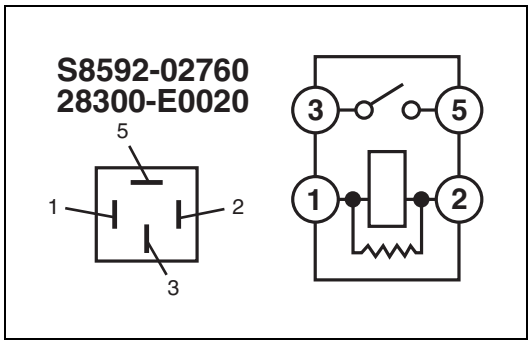


SAPH12Z080100014

**2. TYPE-3 AND TYPE-4 INSPECTION**

(1) Apply voltage to terminals;
12 V to terminal 1,
Ground to terminal 2.

(2) Under normal condition, terminals 3 and 5 switch on.

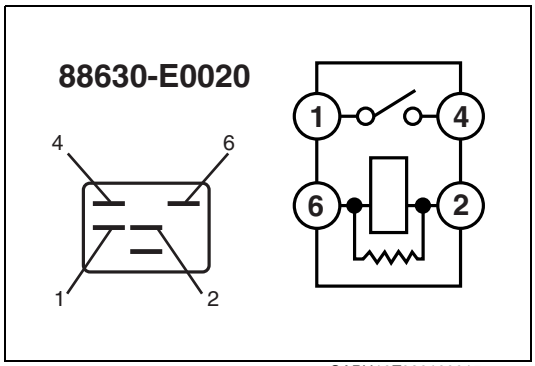


SAPH12Z080100015

**3. TYPE-5 INSPECTION**

(1) Apply voltage to terminals;
12 V to terminal 6,
Ground to terminal 2.

(2) Under normal condition, terminals 1 and 4 switch on.

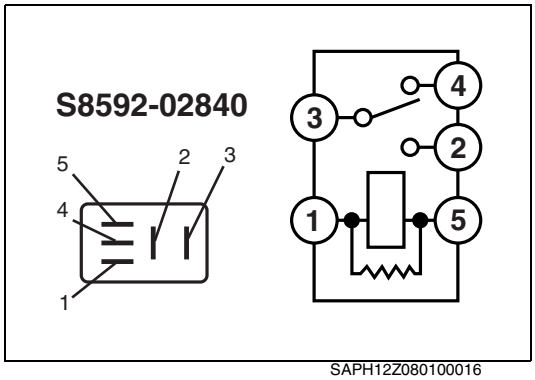


SAPH12Z080100016

**4. TYPE-6 INSPECTION**

(1) Apply voltage to terminals;
12 V to terminal 1,
Ground to terminal 5.

(2) Under normal condition, relay switches the continuity from terminals 3 and 4 to 3 and 2.

# HANDLING PRECAUTION

EN12Z0801C100002

## BATTERY

**⚠ WARNING**

- **Since the batteries produce explosive hydrogen gas, do not allow any open or electric sparks near the batteries.**
- **The batteries produce explosive gas and contain corrosive sulfuric acid. A battery explosion, contact with electrolyte, or an electrical short can result in personal injury and/or property damage.**
- **Always shield your eyes or wear safety goggles when working on the batteries. Do not let electrolyte, which is sulfuric acid, come in contact with eyes, skin, or clothing. Since electrolyte is corrosive acid, it can damage skin and clothing. If acid should contact your skin, eyes or clothing, immediately flush the contact area thoroughly with water and get medical treatment immediately.**
- **When working on the batteries, be sure to remove any metal accessories from your arms. Do not lean over the batteries.**
- **This vehicle has a 12-volt, negative grounds system. Make sure that any other vehicle used for jump starting also has a 12-volt, negative ground system. Do not attempt to jump start when you are not sure of the voltage or ground of the other vehicle.**

### 1. CHECKING THE BATTERY FLUID LEVEL

**NOTICE**

- EXCEPT AGM BATTERY

(1) Check the battery fluid level and add distilled water as necessary. Do not continue to operate the vehicle with a low battery fluid, as doing so is dangerous.

(2) Do not overfill the cells. Excess electrolyte could squirt out of the battery during heavy charging, causing corrosion or damage.

- AGM BATTERY
  Do not refill the water in the battery. Do not attempt to open the vents of the battery. Charge voltage limited to 14.6 Volts.

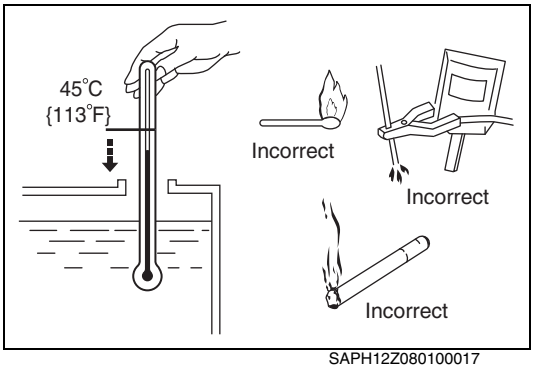

SAPH12Z080100017

### 2. BATTERY CHARGING

**NOTICE**

**If the electrolyte level is below the specified level, replace the battery. If it is within the specified level, the battery can be recharged.**

- Be careful of the following points.

(1) While the battery is being charged, ensure that the temperature of the electrolyte does not rise above 45°C {113°F}.

(2) While the battery is being charged, be particularly careful to keep it away from sources of fire.

(3) The amount of electrolyte must be within the specified level.

### 3. CLEANING THE BATTERY

- If the terminals at the top of the battery are dirty, clean them with cold water or lukewarm water.
- Apply a light coating of grease to the terminals to prevent them from rusting so as to prevent faulty contact.

### 4. CONNECTING THE BATTERY CABLES

- Tighten the cables securely to prevent improper contact between the cables and the battery terminals.
- Be very careful not to connect the (+) and (-) leads in reverse. (Because this may cause damage to the equipment and batteries)

# INSPECTION

EN12Z0801H300001

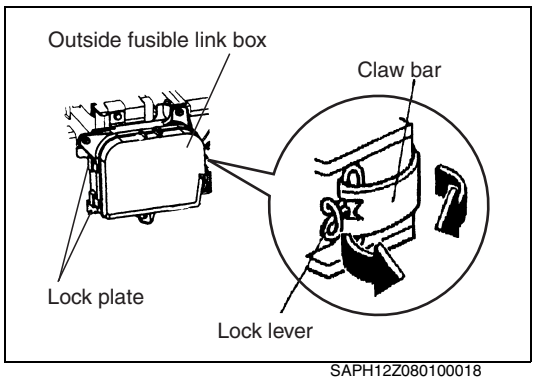


SAPH12Z080100018

## REMOVAL PROCEDURE FOR OUTSIDE FUSIBLE LINK BOX

1. **Push the lock lever and disconnect the claw bar. (2 portions)**
2. **Remove the box cover while lifting two lock plate.**

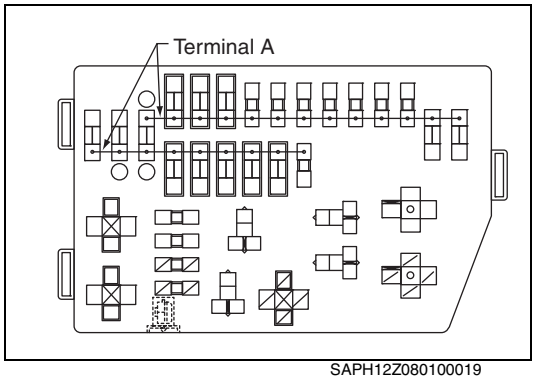


SAPH12Z080100019

## POWER SUPPLY CIRCUIT

**1. FUSIBLE LINK BLOCK INSPECTION**

(1) Check the voltage between fusible link block terminal A and chassis body ground.
(2) Under normal condition, the voltage is about 12 V.
(3) If it is not correct, check the battery cable, wiring harness, etc.

- Battery cable (Open circuit, loosen connection, etc.)
- Wiring harness (Open circuit, etc.)
- Battery (Discharged)

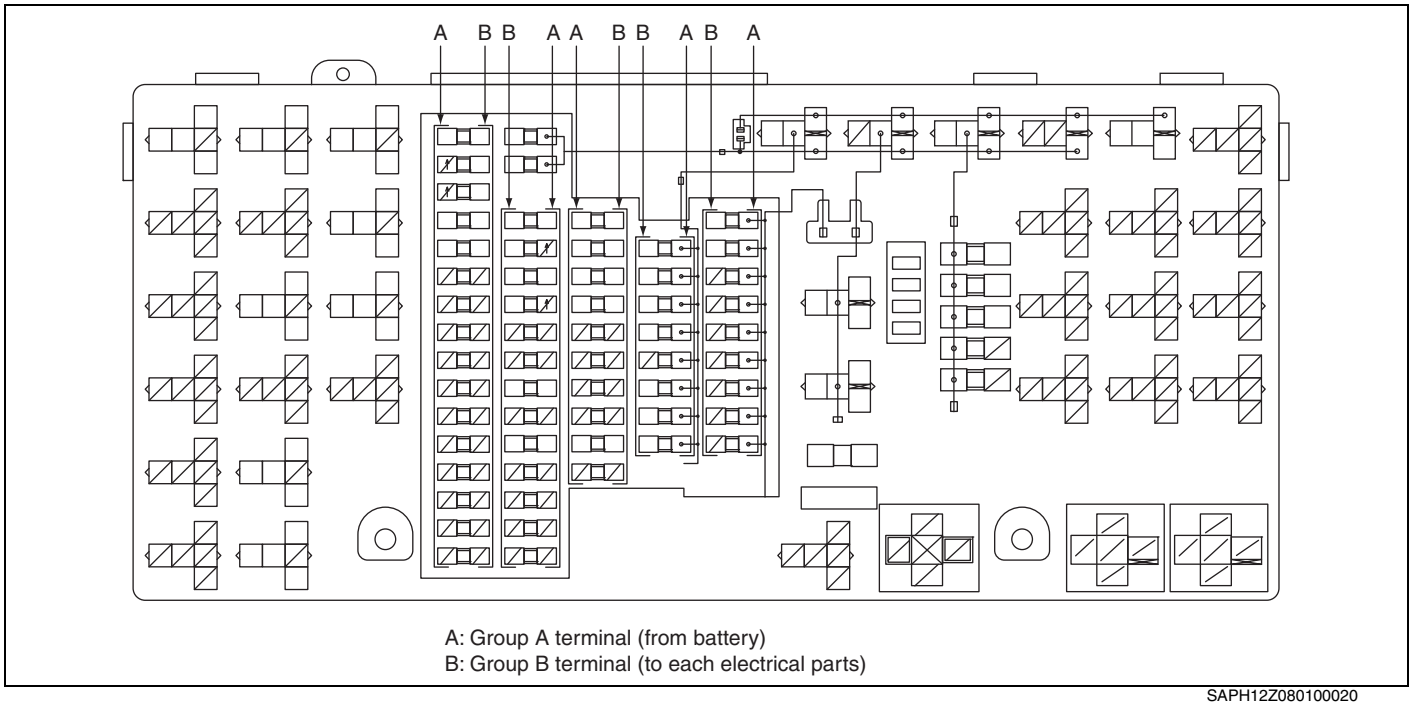


A: Group A terminal (from battery)
B: Group B terminal (to each electrical parts)

SAPH12Z080100020

**2. FUSE BLOCK INSPECTION**

(1) Check the voltage between group A terminals of fuse block and cab body ground.
(2) Under normal condition, the voltage is about 12 V.
(3) If it is not correct, check the circuit from battery to fuse.

- Coupler connection between cab harness and chassis harness
- Coupler connection of each electrical parts
- Cab harness and chassis harness
  (Open circuit, against short, etc.)
- Fusible link burn out

## ENGINE STARTING CIRCUIT

**1. STARTER SWITCH INSPECTION**

(1) Check the continuity between terminals.
If it is not correct, replace it.

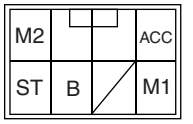





| Terminals / Switch position | B | ACC | M2 | M1 | ST |
|---|---|---|---|---|---|
| LOCK | | | | | |
| ACC | ○ | ○ | | | |
| ON | ○ | ○ | ○ | ○ | |
| ST | ○ | | ○ | ○ | ○ |

SAPH12Z080100021

**2. STARTER RELAY INSPECTION**

**Refer to page EL01-16.**

# HEAD LIGHT CIRCUIT

## 1. COMBINATION SWITCH INSPECTION

(1) Check the continuity between terminals.
If it is not correct, replace it.

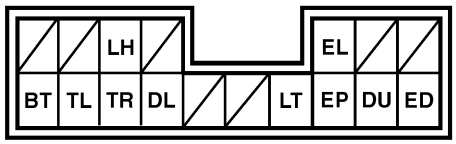


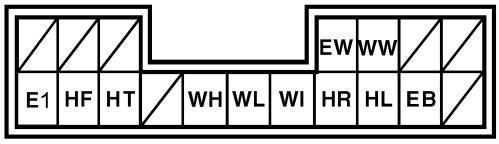


**Lighting (ON, OFF):**

| Terminals / Switch position | EL | LT | LH |
|---|---|---|---|
| OFF | | | |
| TAIL | ○ | ○ | |
| TAIL AND HEAD | ○ | ○ | ○ |

**Lighting (HIGH, LOW):**

| Terminals / Switch position | ED | DL | DU | EP |
|---|---|---|---|---|
| PASSING | ○ | ○ | ○ | ○ |
| LOW BEAM | ○ | ○ | | |
| HIGH BEAM | ○ | | ○ | |

**Turn signal:**

| Terminals / Switch position | BT | TL | TR |
|---|---|---|---|
| LEFT | ○ | ○ | |
| OFF | | | |
| RIGHT | ○ | | ○ |

**Hazard warning:**

| Terminals / Switch position | HF | HL | HR | HT |
|---|---|---|---|---|
| OFF | | | | |
| ON | ○ | ○ | ○ | ○ |

**Windshield wiper and washer:**

| Terminals / Switch position | WW | EW | WI | WL | WH |
|---|---|---|---|---|---|
| OFF | | | | | |
| WIPER: INT | | ○ | ○ | | |
| LOW | | ○ | | ○ | |
| HIGH | | ○ | | ○ | ○ |
| WASHER: ON | ○ | ○ | | | |

**Exhaust brake:**

| Terminals / Switch position | EB | E1 |
|---|---|---|
| OFF | | |
| ON | ○ | ○ |

SAPH12Z080100022

**2. DAYTIME RUNNING LIGHT ECU INSPECTION (IF SO EQUIPPED)**

(1) Wire the daytime running light ECU, bulbs, battery and others as shown in figure.

(2) Check operation of daytime running light ECU.

| | Engine stopping | | | | | |
|---|---|---|---|---|---|---|
| **Lighting switch position** | **OFF or Tail** | | | **Head light** | | |
| **Dimmer switch position** | **Low** | **High** | **Passing** | **Low** | **High** | **Passing** |
| **Headlight low beam** | **Off** | **Off** | **Off** | **On** | **Off** | **On** |
| **Headlight high beam** | **Off** | **Off** | **On** | **Off** | **On** | **On** |

| | | Engine running | | | | | |
|---|---|---|---|---|---|---|---|
| **Lighting switch position** | | **OFF or Tail** | | | **Head light** | | |
| **Dimmer switch position** | | **Low** | **High** | **Passing** | **Low** | **High** | **Passing** |
| **Headlight low beam** | **Parking brake off** | **Dim on** | **Dim on** | **Off** | **On** | **Off** | **On** |
| | **Parking brake pull** | **Off** | **Off** | | | | |
| **Headlight high beam** | | **Off** | **Off** | **On** | **Off** | **On** | **On** |

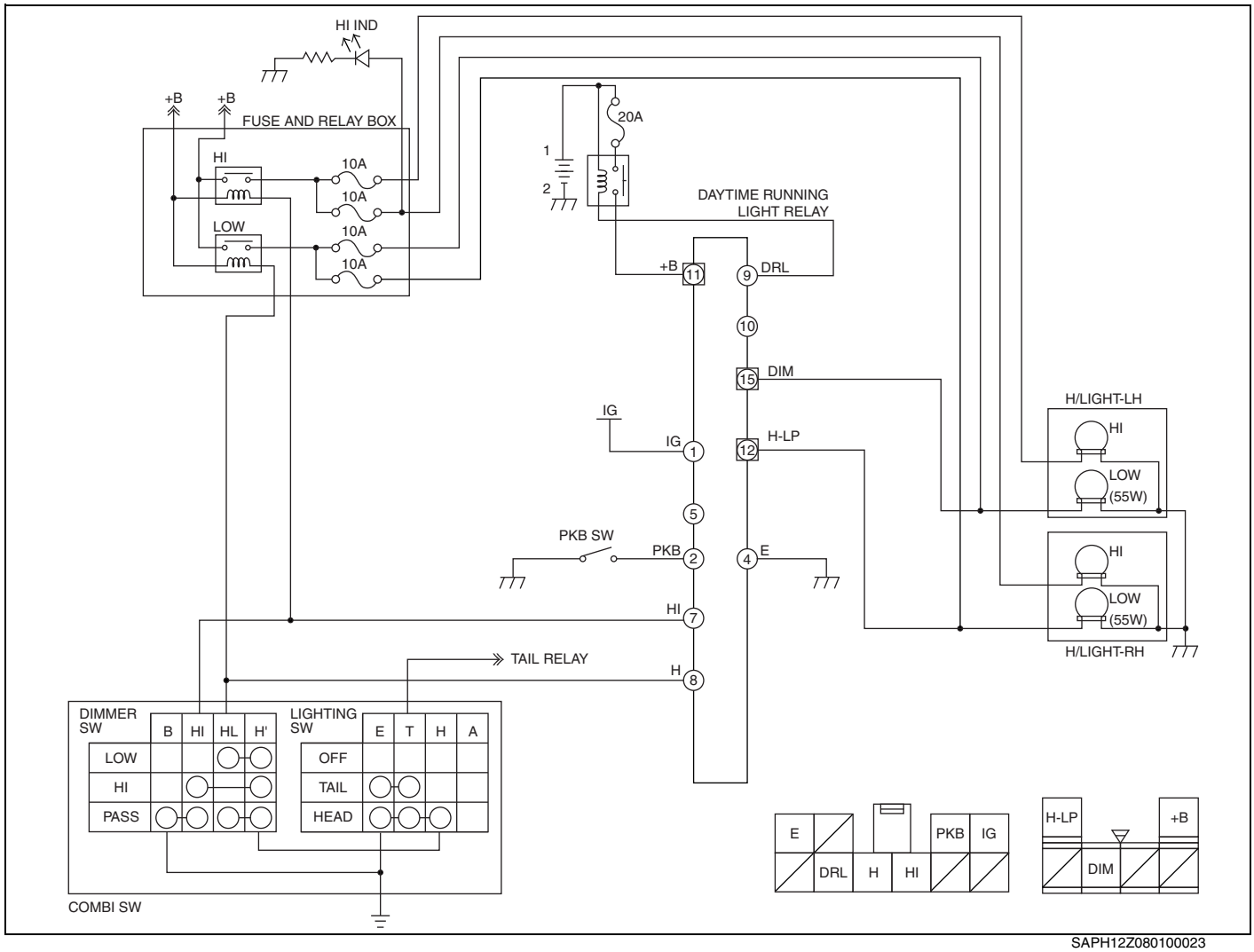


SAPH12Z080100023

## TURN SIGNAL, HAZARD, STOP CLEARANCE, TAIL AND LICENSE PLATE LIGHT CIRCUIT

### 1. TURN SIGNAL FLASHER INSPECTION

(1) Wire the turn signal flasher, bulbs, battery and fuse as shown in figure.

(2) Under normal condition, bulbs turn on and off.

**NOTICE**

**Take care of quantity when installing bulbs.**

| | |
|---|---|
| **TURN SIGNAL:** | **27W x 2 pcs, 5W x 1 pcs, LED x 1 pcs** |
| **HAZARD WARNING:** | **27W x 4 pcs, 5W x 2 pcs, LED x 2 pcs** |

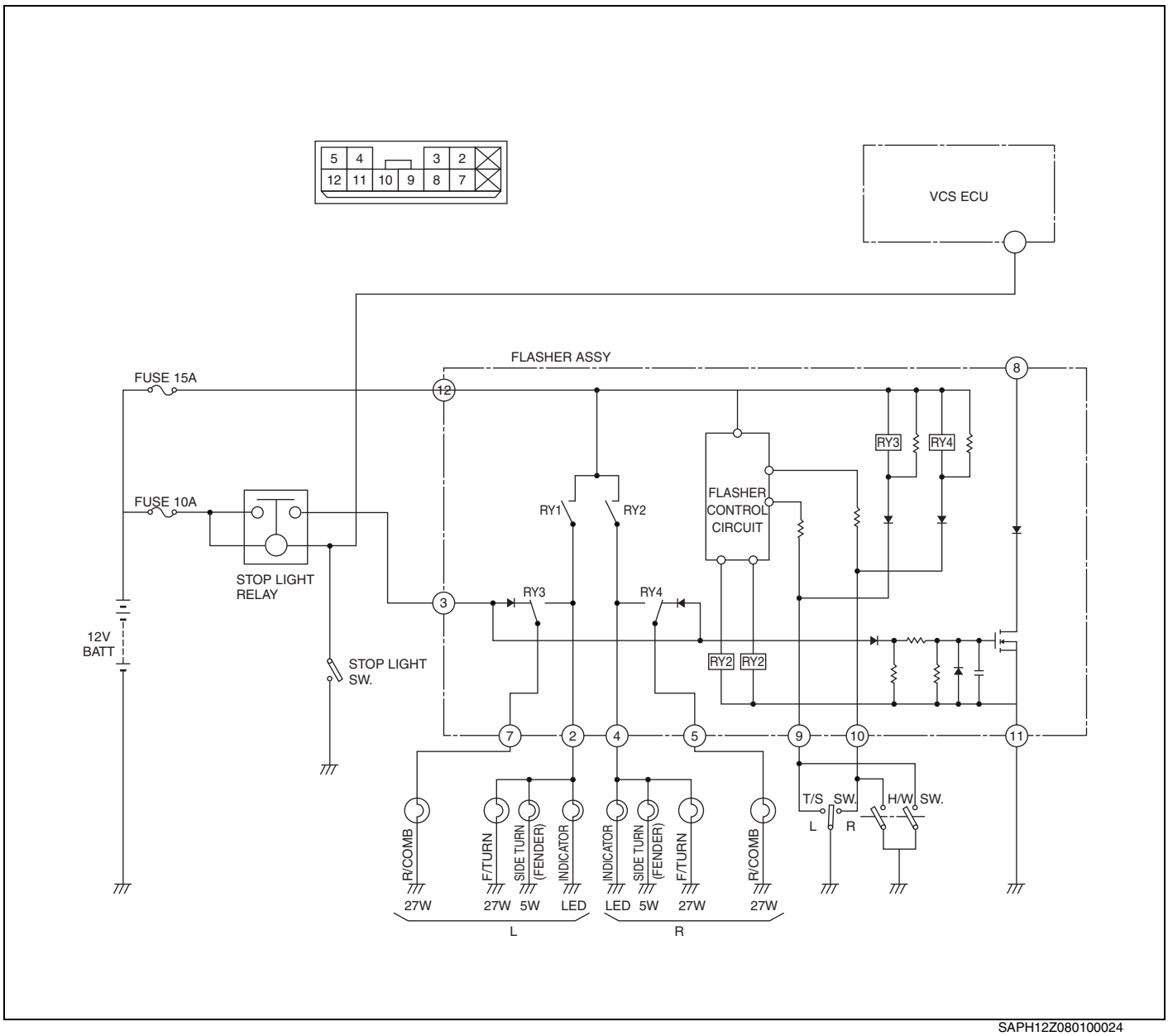


SAPH12Z080100024

**2. STOP LIGHT SWITCH INSPECTION (Full air brake)**

(1) Check the continuity between terminals.
If it is not correct, replace it.

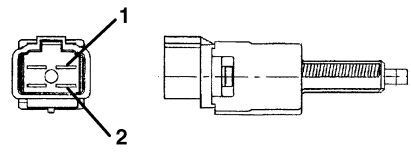


| Switch position \ Terminals | 1 | 2 |
|---|---|---|
| PUSH | | |
| FREE | ○ | ○ |

SAPH12Z080100025

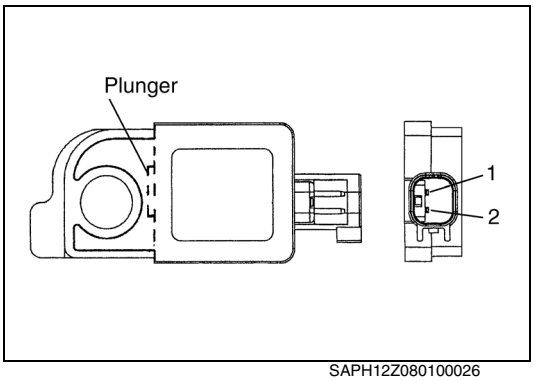


SAPH12Z080100026

**3. STOP LIGHT SWITCH INSPECTION (Hydraulic brake)**

(1) Check the continuity between terminals
**Push the plunger: continuity**
If it is not correct, replace it.

## DOME LIGHT

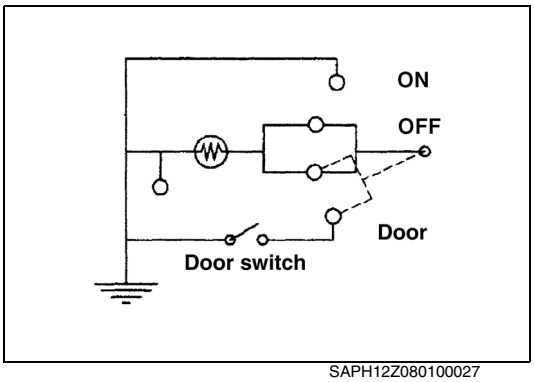


SAPH12Z080100027

**1. DOME LIGHT INSPECTION**

(1) Apply voltage to terminals and check the bulbs lighting.
If it is not correct, replace it.

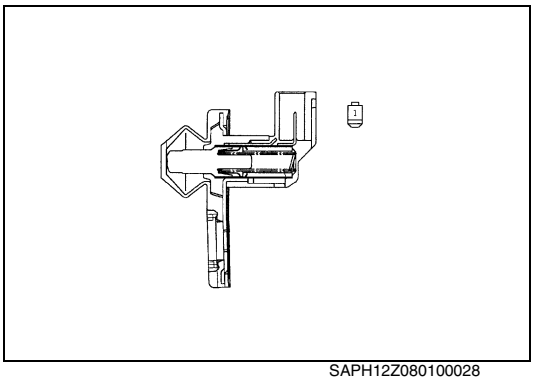

SAPH12Z080100028

**2. COURTESY SWITCH INSPECTION**

(1) Check the continuity between terminal and body ground.

| | Between terminals |
|---|---|
| PUSH | No continuity |
| FREE | Continuity |

(2) If it is not correct, replace it.

## WINDSHIELD WIPER CIRCUIT

**1. WIPER MOTOR INSPECTION**

(1) Apply 12V to terminals, the motor should operate as shown in figure.

**NOTICE**

**Connect terminal LW to a 10A fuse and 12V power source. Connect wiper motor body to negative terminal of power source. If the fuse burns out or the motor does not operate, replace the motor.**

(2) If it is not correct, replace it.

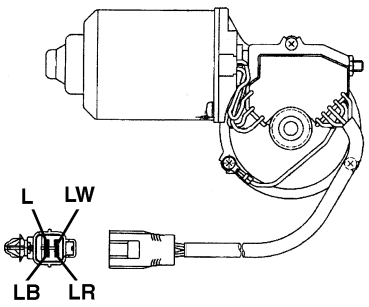


| Terminals / Switch position | LW | LB | L | LR |
|---|---|---|---|---|
| OFF | ○ | ○ | | |
| LOW | ○ | | ○ | |
| HIGH | | | ○ | ○ |

SAPH12Z080100029

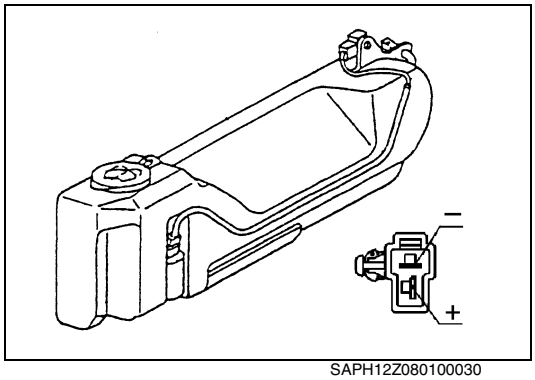


SAPH12Z080100030

**2. WASHER PUMP INSPECTION**

(1) Check the continuity between terminals of the motor.
If no continuity, replace washer tank and pump assembly.

**NOTICE**

**Do not apply voltage to the pump motor with an empty washer tank, or the motor will be damaged.**

## POWER DOOR LOCK CIRCUIT

**1. DRIVER SIDE DOOR LOCK SWITCH INSPECTION**

(1) Check the continuity between terminals. If there is no continuity, replace the switch.

Driver side door lock switch

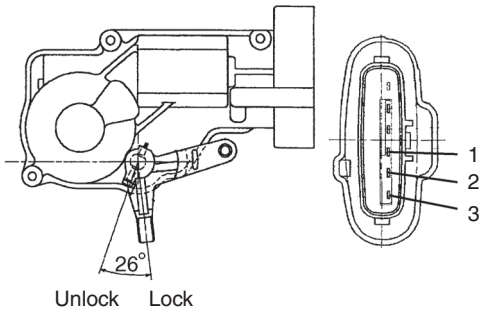


| Terminals / Lever position | 1 | 2 | 3 |
|---|---|---|---|
| LOCK | ○ | | ○ |
| UNLOCK | | ○ | ○ |

SAPH12Z080100031

**2. ASSISTANT SIDE DOOR LOCK ACTUATOR INSPECTION**

(1) Check the continuity between terminals. If there is no continuity, replace the actuator.

Assistant side door lock actuator

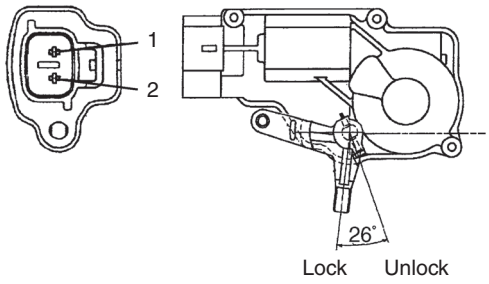


| Terminals / Lever position | 1 | 2 |
|---|---|---|
| LOCK | + | − |
| UNLOCK | − | + |

SAPH12Z080100032

**3. DOOR LOCK CONTROLLER INSPECTION (POWER DOOR LOCK)**

(1) Wire the door lock controller as shown in the figure.
(2) Check the function.
(3) If it is not correct, replace it.

Door lock controller

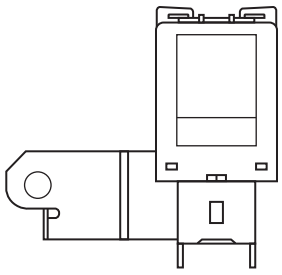

Door lock operation

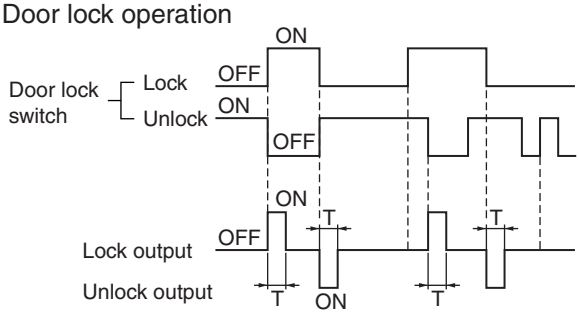


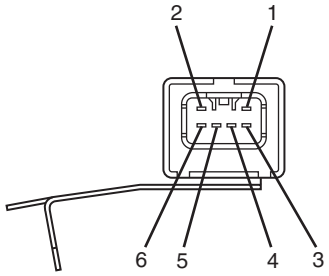


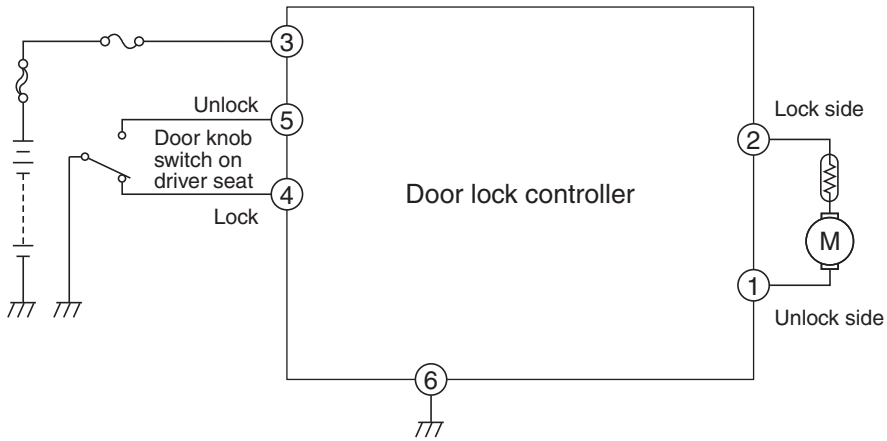


SAPH12Z080100033

**4. DOOR LOCK CONTROLLER INSPECTION (KEY-LESS ENTRY)**

(1) Wire the door lock controller as shown in the figure.
(2) Check the function.
(3) If it is not correct, replace it.

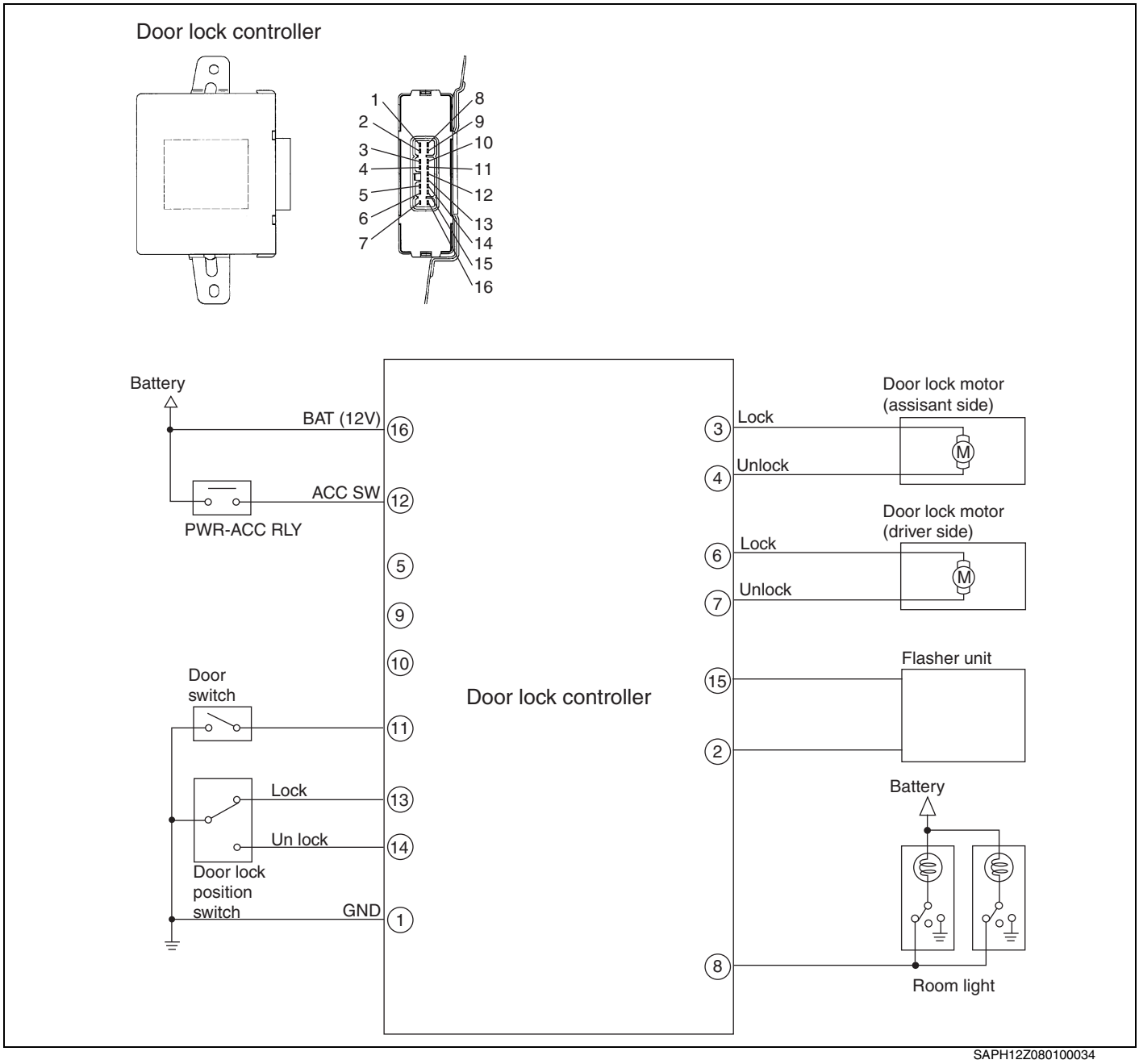


SAPH12Z080100034

## GAUGE, METER AND WARNING CIRCUIT

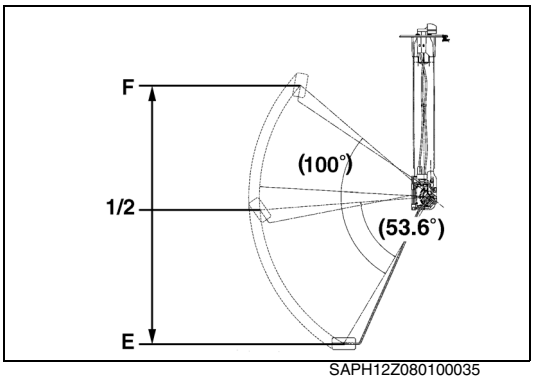

SAPH12Z080100035

### 1. FUEL GAUGE SENDER UNIT INSPECTION

(1) Measure resistance between terminals.

| Float position | F | 1/2 | E |
|---|---|---|---|
| Resistance: Ω | 0-1.2 | (31) | 146.5-153.5 |

(2) If it is not correct, replace it.

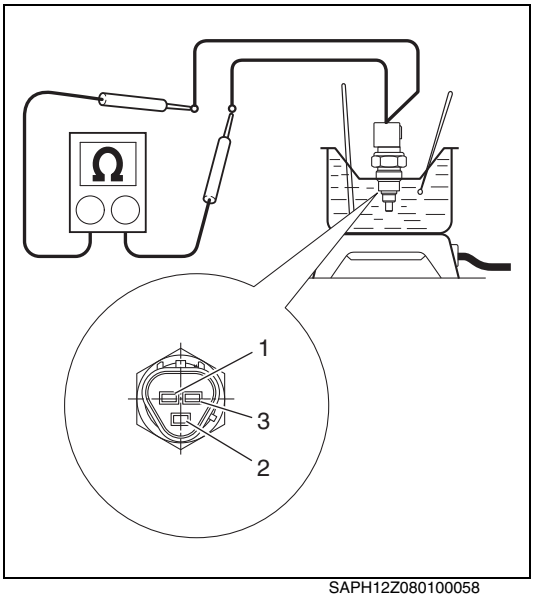

SAPH12Z080100058

### 2. COOLANT TEMPERATURE GAUGE SENDER UNIT INSPECTION

(1) Warm up the sender gauge and measure the resistance between the terminal 1 and 3.

| Temperature | 20°C {68°F} | 80°C {176°F} |
|---|---|---|
| Resistance: kΩ | 2.32-2.59 | 0.310-0.326 |

(2) If it is not correct, replace it.

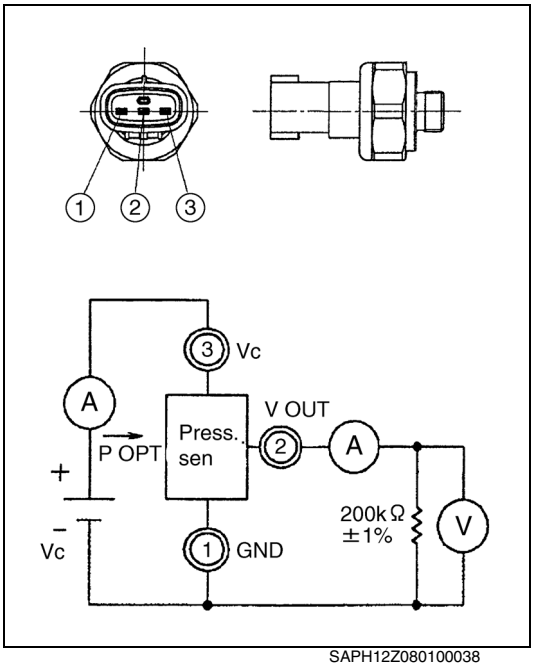

SAPH12Z080100038

### 3. AIR PRESSURE GAUGE SENSOR INSPECTION

(1) Wire the air pressure gauge sensor and voltmeter as shown in figure.
(2) Apply voltage terminal; 5 V to terminal 3
(3) Apply air pressure
(4) Check voltage between terminal 1 and 2

| Air pressure | Voltage |
|---|---|
| 0 MPa {0 kgf/cm$^2$, 0 lbf/in$^2$} | 0.5 V |
| 1.6 MPa {16.3 kgf/cm$^2$, 232 lbf/in$^2$} | 4.5 V |

(5) If it is not correct, replace it.

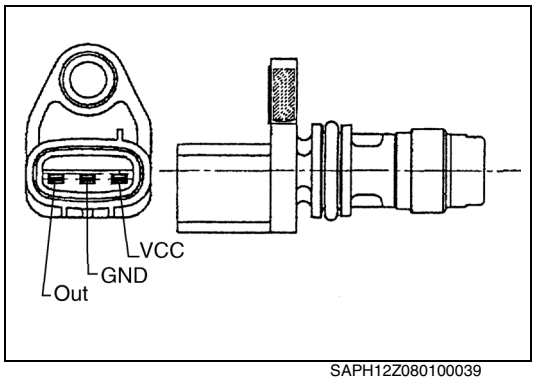


SAPH12Z080100039

**4. REVOLUTION SENSOR INSPECTION**

(1) Check the continuity between terminals.
If the revolution sensor is normal, there will be continuity between the terminals.
If it is not correct, replace it.

**5. HYDRO-MAX BRAKE CONTROLLER INSPECTION**

(1) Wire the HYDRO-MAX brake controller, buzzer, motor relay and others as shown in figure.

(2) Check operation
   a. When the starter switch is ON, an alarm is carried out by motor monitor low voltage.
      If the motor monitor is low voltage after high voltage, warning stops.
   b. An alarm is carried out by high voltage of motor monitor and starter switch on.
   c. An alarm is carried out by opening of motor monitor circuit and starter switch on.
   d. Electric power is supplied to the motor relay coil with starter switch on or brake switch on.

(3) If it is not correct, replace it.

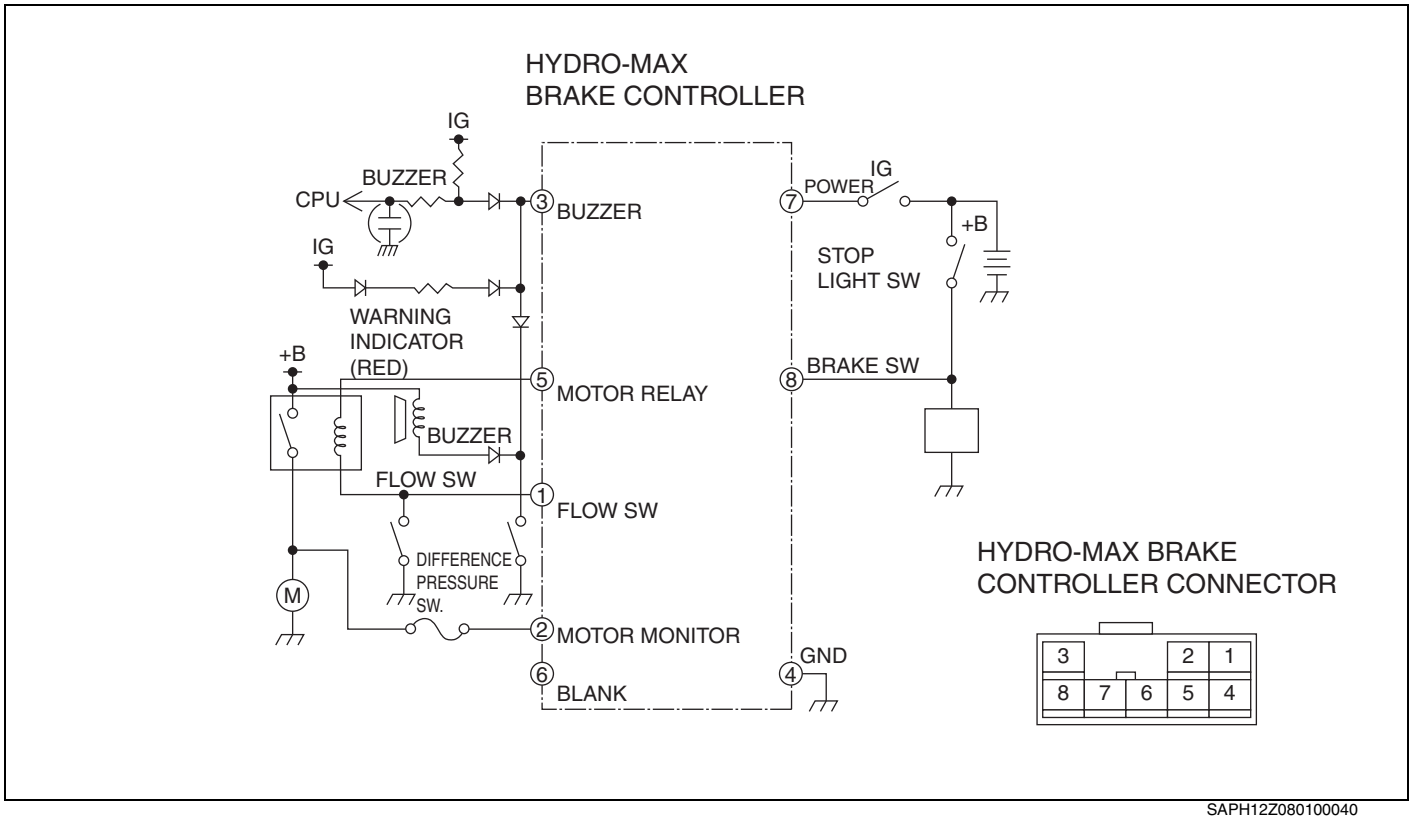


SAPH12Z080100040

**6. OIL PRESSURE SWITCH INSPECTION**

(1) Start engine and disconnect the coupler.
(2) Check the continuity between terminal and engine ground.
(3) If it is not correct, replace it.

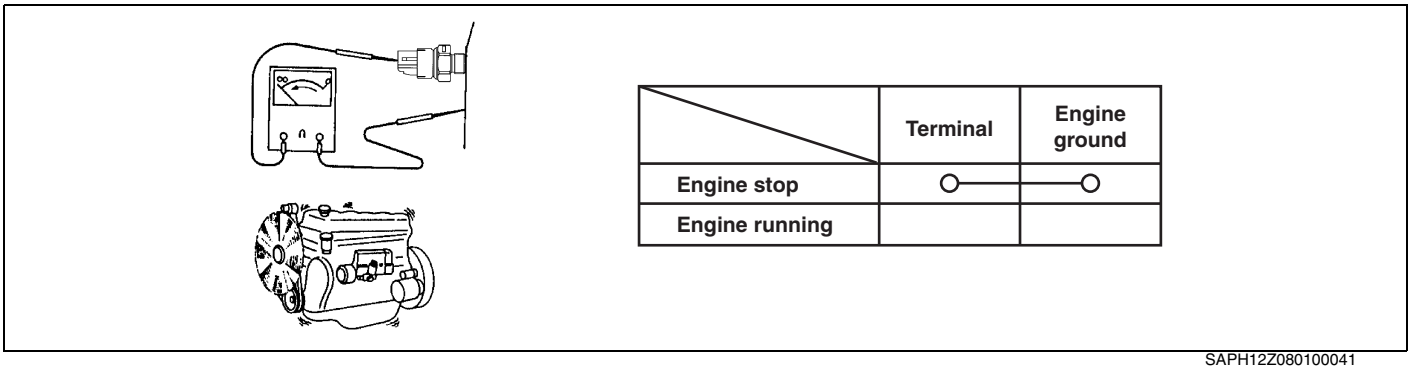

| | Terminal | Engine ground |
|---|---|---|
| Engine stop | ○ | ○ |
| Engine running | | |

SAPH12Z080100041

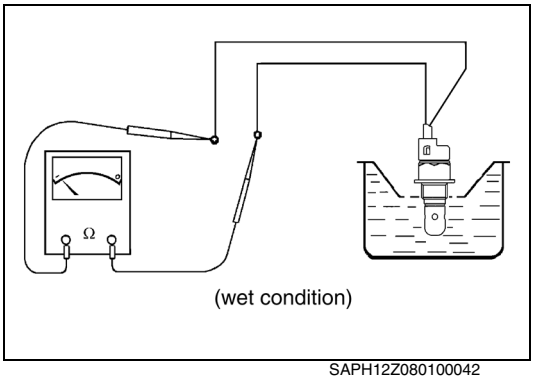


SAPH12Z080100042

**7. CHECK THE OPERATION OF THE COOLANT LEVEL WARNING SENSOR.**

(1) Using an ohmmeter, measure the resistance between the terminal and ground at the indicated coolant temperatures.
If resistance is not within specifications, replace the gauge unit.

| | Resistance |
|---|---|
| Dry condition | Over 1 MΩ |
| Wet condition | Under 10 kΩ |

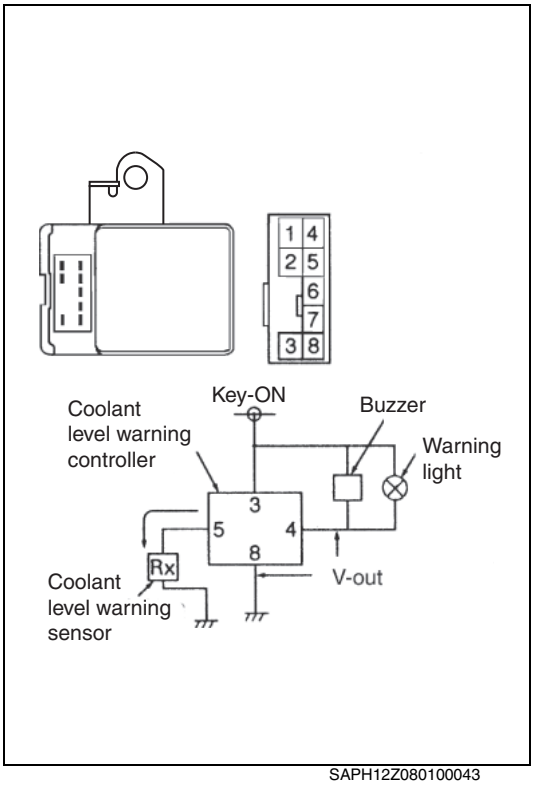


SAPH12Z080100043

**8. CHECK THE OPERATION OF THE COOLANT LEVEL WARNING CONTROLLER.**

(1) When the resistance of the coolant level sensor indicates less than 10 kΩ, the coolant level warning controller does not operate, and when it is more than 30 kΩ, it is operational and the buzzer rings.
(2) When the voltage of the power is 12 V and the temperature is 20°C — 5°C (68° — 41°F) the voltage and the resistance of sensor operates as follows, (Rx=The resistance of coolant level sensor)

- When Rx indicates infinity, Voltage (V-out) comes to less than 1.5 V and the buzzer rings.
- When Rx indicates 0 Ω, voltage (V-out) is nearly equal to the voltage of the power, the buzzer does not ring.

(3) When the connector of coolant level sensor is taken off, the warning light turn on.
(4) When terminal No.5 is taken off and is connected to the ground, Rx indicates almost 0 Ω.
Unless it is as noted above, replace the coolant level sensor.

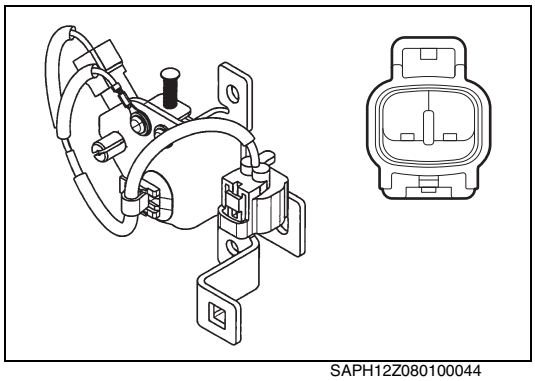

SAPH12Z080100044

**9. PARKING BRAKE SWITCH INSPECTION (Hydraulic brake)**

(1) Check the continuity between terminals.
If it is not correct, replace it.

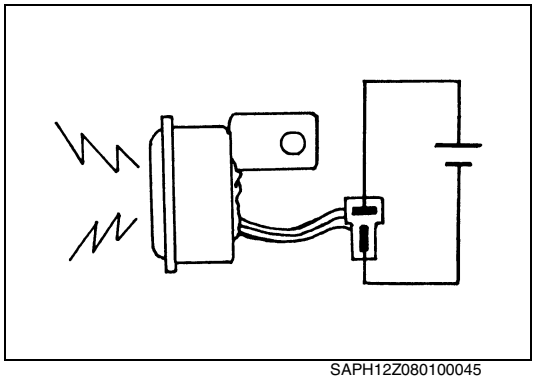

SAPH12Z080100045

**10. CHECK THE OPERATION OF THE WARNING BUZZER.**

(1) Apply 12 V D.C. across the terminals and check that the buzzer sounds.
If it is not correct, replace it.

## POWER WINDOW CIRCUIT (IF SO EQUIPPED)

**1. DRIVER SIDE SWITCH INSPECTION**

(1) Check the continuity between terminals.
If it is not correct, replace it.

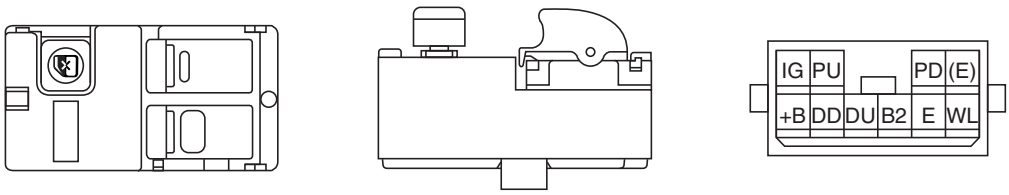


**Driver side:**

| Switch position \ Terminals | +B | DU | DD | E |
|---|---|---|---|---|
| CLOSE | ○ | ○ | ○ | ○ |
| ↕ | × | | | × |
| OFF | | ○ | ○ | ○ |
| ↕ | × | | | × |
| OPEN | ○ | ○ | | ○ |

**Assistant side: lock switch on position**

| Switch position \ Terminals | +B | PU | PD | E | WL |
|---|---|---|---|---|---|
| CLOSE | ○ | ○ | | | |
| ↕ | × | | | × | |
| OFF | | ○ | ○ | | |
| ↕ | × | | | × | |
| OPEN | ○ | | ○ | | |

**Assistant side: lock switch off position**

| Switch position \ Terminals | +B | PU | PD | E | WL |
|---|---|---|---|---|---|
| CLOSE | ○ | ○ | | ○ | ○ |
| | | | ○ | ○ | |
| ↕ | × | | | × | ○ |
| OFF | | ○ | | ○ | ○ |
| | | | ○ | ○ | |
| ↕ | × | | | × | ○ |
| OPEN | ○ | | ○ | ○ | ○ |
| | | ○ | | ○ | |

SAPH12Z080100047

**2. ASSISTANT SIDE SWITCH INSPECTION**

(1) Check the continuity between terminals.
If it is not correct, replace it.

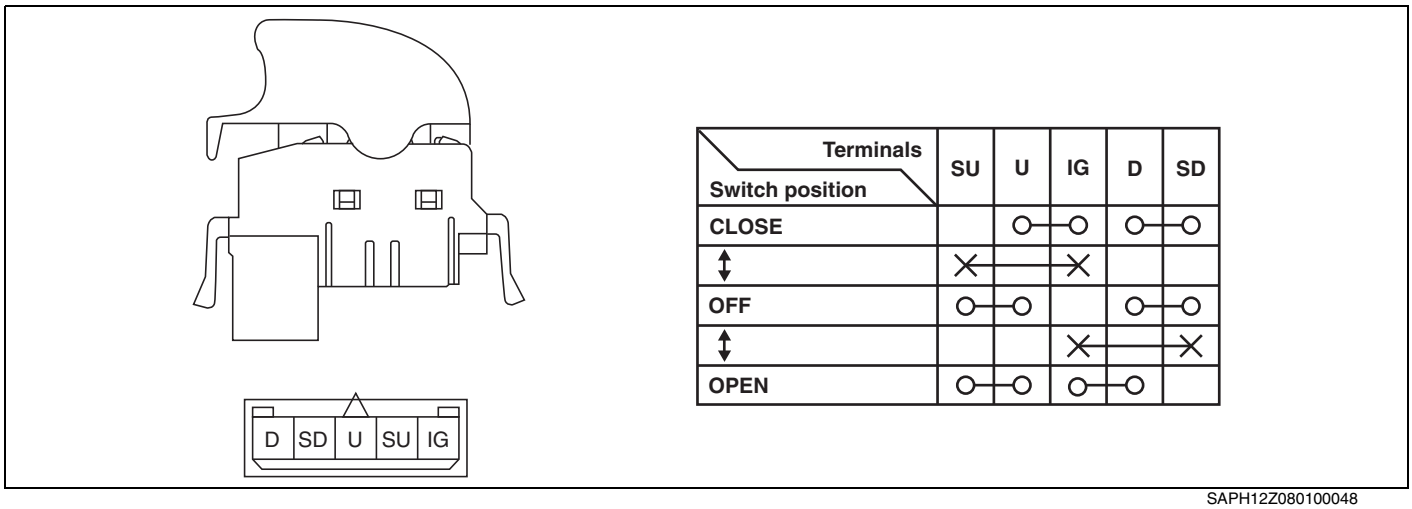


| Terminals / Switch position | SU | U | IG | D | SD |
|---|---|---|---|---|---|
| CLOSE | | ○ | ○ | ○ | ○ |
| ↕ | × | | × | | |
| OFF | ○ | ○ | | ○ | ○ |
| ↕ | | | × | | × |
| OPEN | ○ | ○ | ○ | ○ | |

SAPH12Z080100048

**3. POWER WINDOW MOTOR INSPECTION**

(1) Check the continuity between terminals. If there is no continuity, replace the motor.

(2) Apply 12V to terminals, inspect the motor operation as shown in figure.
If it is not correct, replace it.

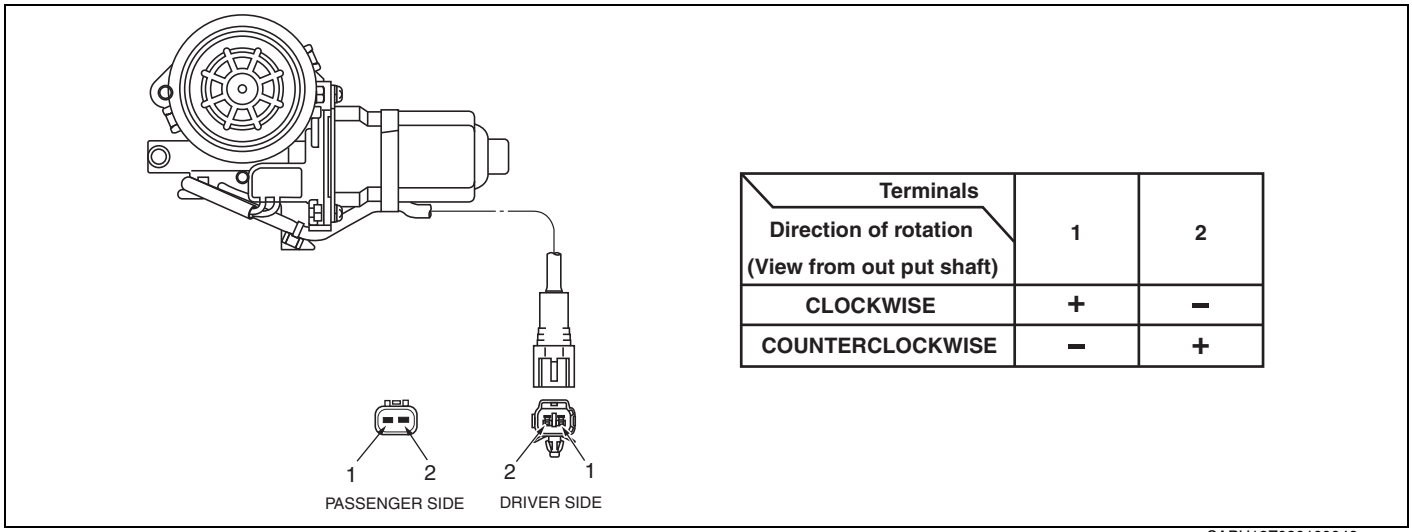


| Terminals / Direction of rotation (View from out put shaft) | 1 | 2 |
|---|---|---|
| CLOCKWISE | + | − |
| COUNTERCLOCKWISE | − | + |

SAPH12Z080100049

## HEATER AND COOLER CIRCUIT

**1. BLOWER SWITCH INSPECTION**

(1) Check the continuity between terminals.
If it is not correct, replace it.

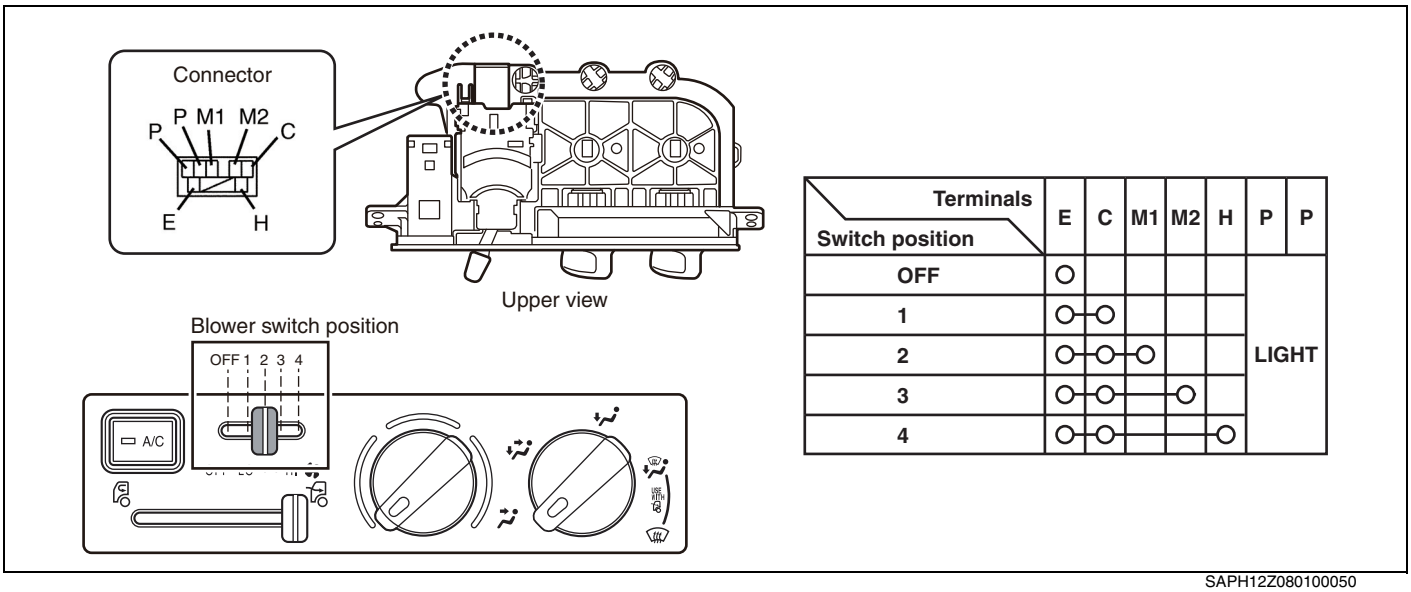


| Switch position \ Terminals | E | C | M1 | M2 | H | P | P |
|---|---|---|---|---|---|---|---|
| OFF | ○ | | | | | LIGHT | |
| 1 | ○ | ○ | | | | | |
| 2 | ○ | ○ | ○ | | | | |
| 3 | ○ | ○ | | ○ | | | |
| 4 | ○ | ○ | | | ○ | | |

SAPH12Z080100050

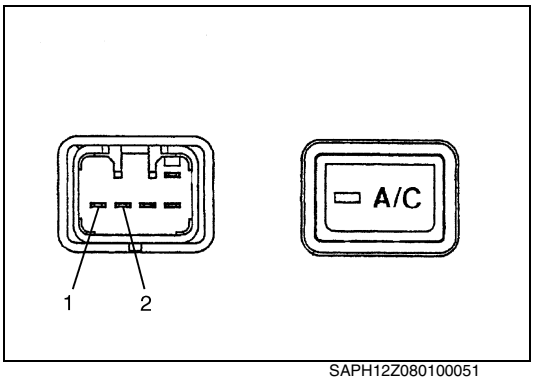


SAPH12Z080100051

**2. COOLER CONTROL SWITCH**

(1) Check the continuity between terminals.

| | Between terminals |
|---|---|
| PUSH | Continuity |
| FREE | No continuity |

(2) If it is not correct, replace it.

**3. POWER RELAY No.2 INSPECTION**

**Refer to page EL01-16.**

## BACK-UP BUZZER CIRCUIT (IF SO EQUIPPED)

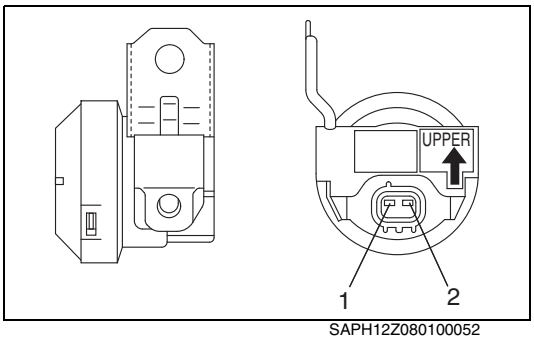


SAPH12Z080100052

**1. BACK-UP BUZZER INSPECTION**

(1) Check continuity between terminal 1 and 2.
If it is not continuity, replace it.

(2) Apply 12 V D.C across the terminal and check that the buzzer sounds.
If it does not, replace the buzzer.

## PRE-HEATING CIRCUIT

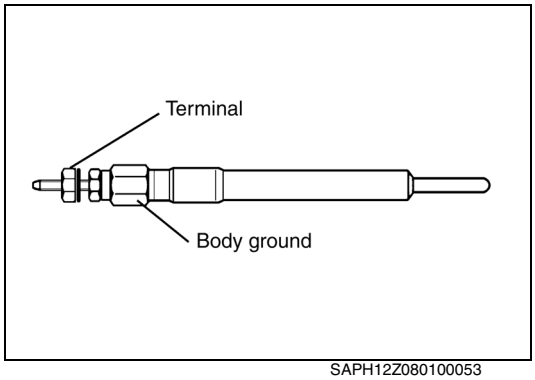

SAPH12Z080100053

**1. GLOW PLUG INSPECTION**

(1) Check continuity between terminal and body ground.

(2) Under normal condition, the terminal and body ground should show continuity.

## BLOCK HEATER CIRCUIT (IF SO EQUIPPED)

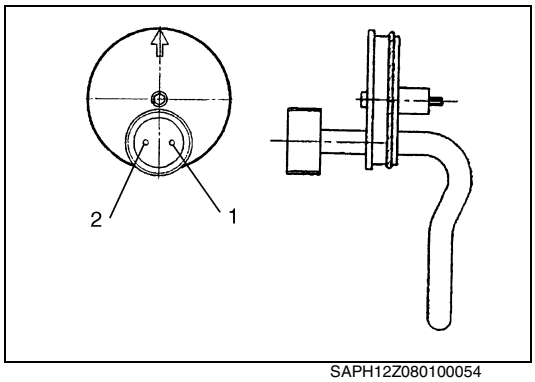

SAPH12Z080100054

**1. BLOCK HEATER INSPECTION**

(1) Check continuity between terminal 1 and 2.
If it is not continuity, replace it.

## DEF SCR CIRCUIT

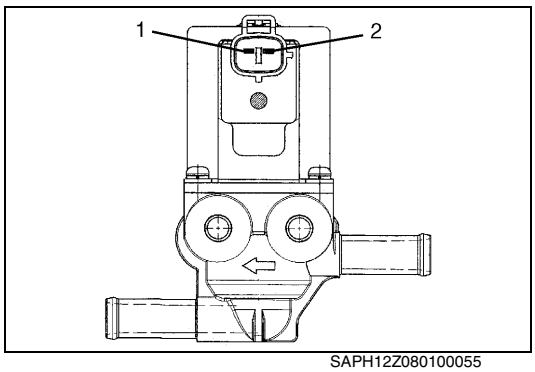

SAPH12Z080100055

**1. COOLANT CUT OFF VALVE INSPECTION**

(1) Check the continuity between terminals.
If it is not continuity, replace it.

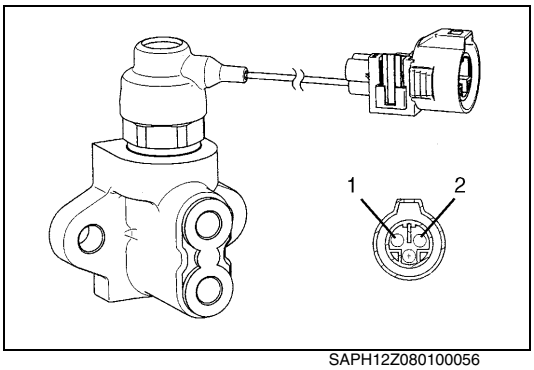

SAPH12Z080100056

**2. FUEL CUT VALVE INSPECTION**

(1) Check the continuity between terminals.
If it is not continuity, replace it.

# INSPECTION AND ADJUSTMENT

EN12Z0801H300002

## ADJUSTMENT OF PULSE CONVERSION RATE

**NOTICE**

**Be sure to carry out the adjustment of pulse conversion rate when you replace the combination meter.**

**HINT**

**This is a device that enables a fine-tuning of compensating ratio of speedometer without modifying the speedometer driven gear of the transmission.**

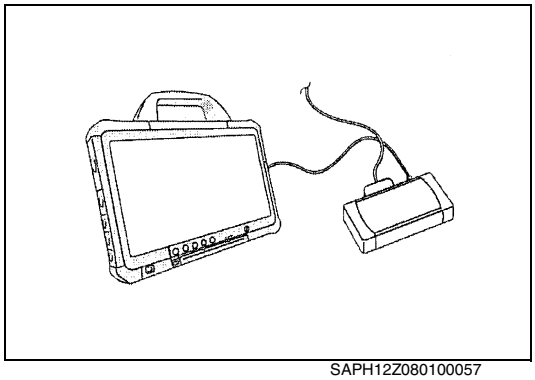

SAPH12Z080100057

**1. CONNECTING INPUT TOOL**

(1) Set the starter switch to the "LOCK" position.
(2) Connect the dedicated cable between diagnosis connector and computer interface.
(3) Connect the computer interface to the PC.

**NOTICE**

**Do not disconnect other connectors.**

**PC:**
**Laptop computer**
**Complete functioning of HINO DX II is conformed on "Panasonic CF-DT".**
**SST:**
**Computer interface**
**(DENSO DST-i set without LCD)**
**Without Bluetooth® (95171-01021)**
**With Bluetooth® (95171-01041)**
**(DENSO DST-i set with LCD)**
**Without Bluetooth® (95171-01031)**
**With Bluetooth® (95171-01051)**
**Diagnosis software: HINO Diagnostic eXplorer II (HINO DX II )**

**2. THE ADJUSTMENT METHOD OF PULSE CONVERSION RATE.**

(1) Set the starter switch to "ON", and then turn on the power of PC to start up the HINO DX II .
(2) With a HINO DX II , change the "Pulse conversion rate" in "Device specification" of the vehicle control ECU.
(3) With a HINO DX II , reset the "Pulse conversion rate" in "Learned Value" of the meter.
(4) Confirm that a conversion rate was displayed by information display.

**3. DISCONNECTING INPUT TOOL**

(1) Turn off the power of PC, and then turn the starter switch to "LOCK" position.
(2) Disconnect the dedicated cable between diagnosis connector and computer interface.
(3) Disconnect the computer interface to the PC.

# SPEEDOMETER CONVERSION RATE LIST

EN12Z0801H300003

## EATON FS-5406A, FS6406A MANUAL TRANSMISSION SERIES

| | | REAR AXLE GEAR RATIO | | | | | | | | | | | |
|---|---|---|---|---|---|---|---|---|---|---|---|---|---|
| TIRE SIZE | RADIUS | 2.93 | 3.07 | 3.15 | 3.21 | 3.31 | 3.42 | 3.58 | 3.73 | 3.90 | 3.91 | 4.10 | 4.11 |
| 245/70R19.5 | 0.407 | 0.868 | 0.829 | 0.808 | 0.792 | 0.768 | 0.744 | 0.710 | 0.682 | 0.652 | 0.650 | 0.620 | 0.619 |
| 255/70R22.5 | 0.453 | 0.966 | 0.922 | 0.899 | 0.882 | 0.855 | 0.828 | 0.791 | 0.759 | 0.726 | 0.724 | 0.690 | 0.689 |
| 255/80R22.5 | 0.475 | 1.013 | 0.967 | 0.943 | 0.925 | 0.897 | 0.868 | 0.829 | 0.796 | 0.761 | 0.759 | 0.724 | 0.722 |
| 275/80R22.5 | 0.491 | 1.047 | 1.000 | 0.974 | 0.956 | 0.927 | 0.897 | 0.857 | 0.823 | 0.787 | 0.785 | 0.748 | 0.747 |
| 10R22.5 | 0.492 | 1.050 | 1.002 | 0.976 | 0.958 | 0.929 | 0.899 | 0.859 | 0.824 | 0.788 | 0.786 | 0.750 | 0.748 |
| 295/75R22.5 | 0.493 | 1.052 | 1.004 | 0.978 | 0.960 | 0.931 | 0.901 | 0.861 | 0.826 | 0.790 | 0.788 | 0.751 | 0.750 |
| 11R22.5 | 0.508 | 1.084 | 1.034 | 1.008 | 0.989 | 0.959 | 0.928 | 0.887 | 0.851 | 0.814 | 0.812 | 0.774 | 0.772 |

| | | REAR AXLE GEAR RATIO | | | | | | | | | | | |
|---|---|---|---|---|---|---|---|---|---|---|---|---|---|
| TIRE SIZE | RADIUS | 4.30 | 4.33 | 4.56 | 4.63 | 4.78 | 4.88 | 4.89 | 5.13 | 5.29 | 5.38 | 5.57 | 5.63 |
| 245/70R19.5 | 0.407 | 0.591 | 0.587 | 0.558 | 0.549 | 0.532 | 0.521 | 0.520 | 0.496 | 0.481 | 0.473 | 0.456 | 0.452 |
| 255/70R22.5 | 0.453 | 0.658 | 0.654 | 0.621 | 0.611 | 0.592 | 0.580 | 0.579 | 0.552 | 0.535 | 0.526 | 0.508 | 0.503 |
| 255/80R22.5 | 0.475 | 0.690 | 0.686 | 0.651 | 0.641 | 0.621 | 0.608 | 0.607 | 0.579 | 0.561 | 0.552 | 0.533 | 0.527 |
| 275/80R22.5 | 0.491 | 0.714 | 0.709 | 0.673 | 0.663 | 0.642 | 0.629 | 0.627 | 0.598 | 0.580 | 0.570 | 0.551 | 0.545 |
| 10R22.5 | 0.492 | 0.715 | 0.710 | 0.674 | 0.664 | 0.643 | 0.630 | 0.629 | 0.599 | 0.581 | 0.571 | 0.552 | 0.546 |
| 295/75R22.5 | 0.493 | 0.716 | 0.712 | 0.676 | 0.665 | 0.644 | 0.631 | 0.630 | 0.600 | 0.582 | 0.573 | 0.553 | 0.547 |
| 11R22.5 | 0.508 | 0.738 | 0.733 | 0.696 | 0.686 | 0.664 | 0.651 | 0.649 | 0.619 | 0.600 | 0.590 | 0.570 | 0.564 |

| | | REAR AXLE GEAR RATIO | | | |
|---|---|---|---|---|---|
| TIRE SIZE | RADIUS | 5.86 | 6.14 | 6.43 | 6.83 |
| 245/70R19.5 | 0.407 | 0.434 | 0.414 | 0.395 | 0.372 |
| 255/70R22.5 | 0.453 | 0.483 | 0.461 | 0.440 | 0.414 |
| 255/80R22.5 | 0.475 | 0.506 | 0.483 | 0.461 | 0.434 |
| 275/80R22.5 | 0.491 | 0.523 | 0.500 | 0.477 | 0.449 |
| 10R22.5 | 0.492 | 0.525 | 0.501 | 0.478 | 0.450 |
| 295/75R22.5 | 0.493 | 0.526 | 0.502 | 0.479 | 0.451 |
| 11R22.5 | 0.508 | 0.542 | 0.517 | 0.494 | 0.465 |

## ALLISON 2200HS, 2200RDS, 2500HS, 2500RDS, 3000RDS, 3500RDS AUTOMATIC TRANSMISSION SERIES

| | | REAR AXLE GEAR RATIO | | | | | | | | |
|---|---|---|---|---|---|---|---|---|---|---|
| TIRE SIZE | RADIUS | 4.11 | 4.88 | 5.13 | 5.29 | 5.38 | 5.57 | 5.63 | 5.86 | 6.14 |
| 245/70R19.5 | 0.407 | 1.238 | 1.043 | 0.992 | 0.962 | 0.946 | 0.913 | 0.904 | 0.868 | 0.829 |
| 255/70R22.5 | 0.453 | 1.378 | 1.161 | 1.104 | 1.071 | 1.053 | 1.017 | 1.006 | 0.966 | 0.922 |
| 255/80R22.5 | 0.475 | 1.445 | 1.217 | 1.158 | 1.123 | 1.104 | 1.066 | 1.055 | 1.013 | 0.967 |
| 10R22.5 | 0.492 | 1.497 | 1.260 | 1.199 | 1.163 | 1.143 | 1.104 | 1.093 | 1.050 | 1.002 |
| 295/75R22.5 | 0.493 | 1.500 | 1.263 | 1.201 | 1.165 | 1.146 | 1.107 | 1.095 | 1.052 | 1.004 |
| 11R22.5 | 0.508 | 1.545 | 1.302 | 1.238 | 1.201 | 1.181 | 1.140 | 1.128 | 1.084 | 1.034 |

# ELECTRIC WIRE

EL02-001

**DIAGRAM ..... EL02-2**
HOW TO USE THIS CHAPTER ..... EL02-2
SPECIFICATION SYMBOL LIST ..... EL02-8
DIAGRAM ..... EL02-16
POSITION OF CONNECTOR ..... EL02-157
CONNECTOR ..... EL02-182
PIN LIST OF WIRE TO WIRE CONNECTOR (IN THE BULK HEAD CONNECTOR BOX) ..... EL02-208
PIN LIST OF WIRE TO WIRE CONNECTOR (OUT OF THE BULK HEAD CONNECTOR BOX) ..... EL02-213
PIN LIST OF SIGNAL CHECK CONNECTOR ..... EL02-218
CONNECTOR LIST ..... EL02-220

# DIAGRAM

## HOW TO USE THIS CHAPTER

EN12Z0802J100001

- In this chapter, "specification symbols" are used as prefix of each wiring diagram in order to specify the circuits that are different in accordance with the models and specifications. For further detail on how to use this chapter, refer to "1. Description of specification symbol list" and "2. Description of wiring diagram".

1. Description of specification symbol list

| a | Circuit name | b Specification symbol | c Specifications | d Page |
|---|---|---|---|---|
| A | POWER SUPPLY CIRCUIT | ○ | Models equipped with 6 cylinder engine | EL02-17 |
| B | ENGINE STARTING CIRCUIT-1: MODELS EQUIPPED WITH EATON FS SERIES MANUAL TRANSMISSION | ⋈ | Models equipped with 6 cylinder engine and manual transmission | EL02-23 |
| | | ✡ | Engine main wire | |
| C | ENGINE STARTING CIRCUIT-2: MODELS EQUIPPED WITH ALLISON 2200HS, 2200RDS/ 2500RDS AND 3000RDS/ 3500RDS AUTOMATIC TRANSMISSION AND EATON FO SERIES MECHANICAL TRANSMISSION | □ | Models equipped with ALLISON 3000RDS/ 3500RDS automatic transmission | EL02-24 |
| | | ○ | Models equipped with ALLISON 2200HS and 2200RDS/2500RDS automatic transmission | |
| | | ⋈ | Models equipped with 6 cylinder engine and EATON FS series manual transmission | |
| | | ✡ | Engine main wire | |
| D | GLOW PLUG CIRCUIT | ○ | Models equipped with 6 cylinder engine and Glow control unit and glow plugs | EL02-27 |
| E | CHARGING CIRCUIT | □ | Models equipped with 6 cylinder engine | EL02-28 |
| | | ⊠ | Engine main wire | |
| | | △ | Engine RH wire | |

SAPH12Z080200001

a. Circuit name
Designates the circuit names on the wiring diagram.

b. Specification symbol
This is the symbol of the specification listed on the "Specifications" column. On the wiring diagram, this symbol is prefixed to all the wiring type mark (example: 0.85 W-R).
Each wiring is installed only on the vehicles of the specifications that the relevant specification symbol designates.

c. Specifications
Describes the contents of specifications that each specification symbol designates. All the wirings are classified according to the specifications listed here.

d. Page
Indicates the page where the relevant wiring diagram is found.

2. Description of wiring diagram

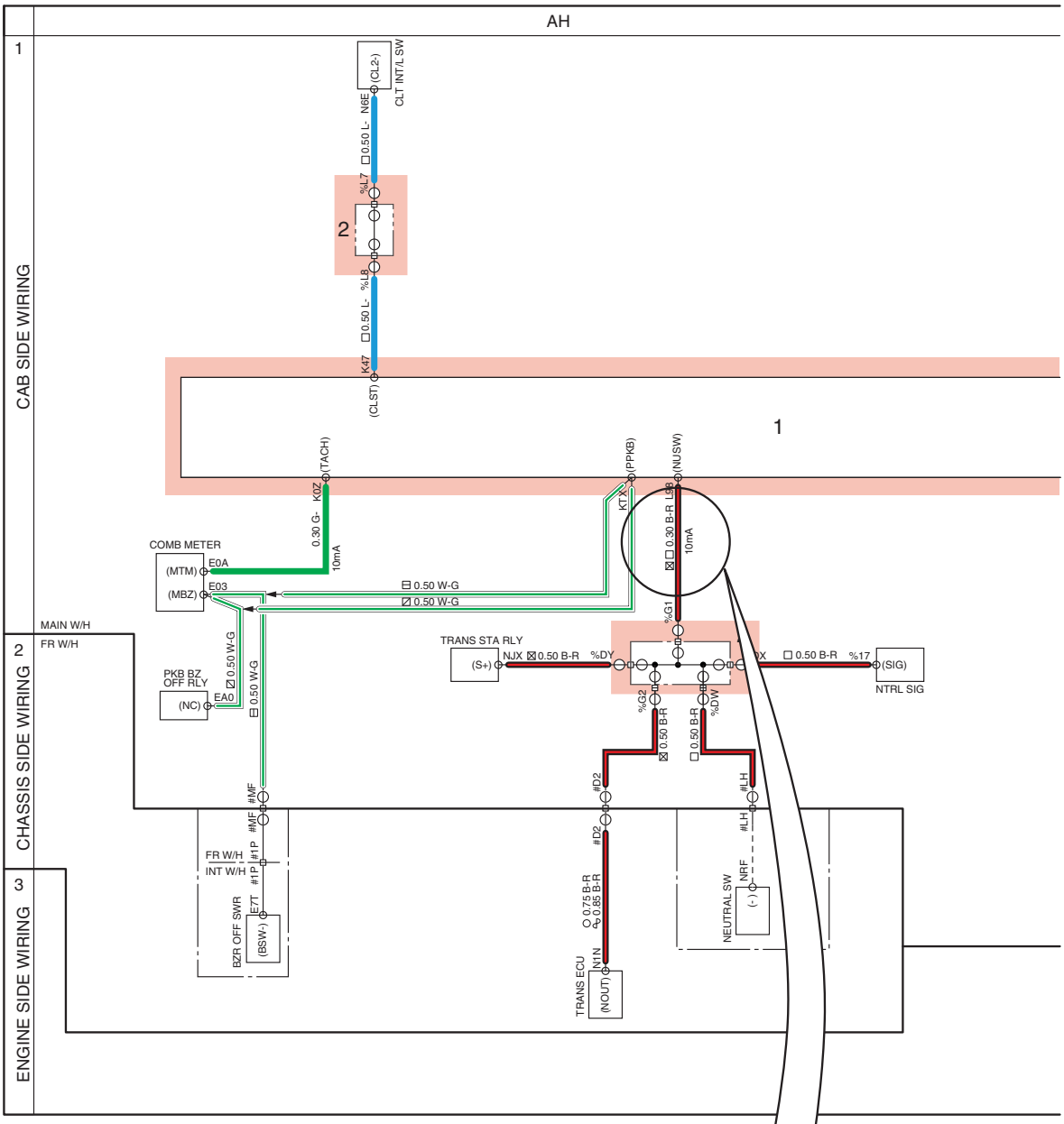


This is the circuit name.

**AH VEHICLE CONTROL ECU CIRCUIT-2**

**1 Vehicle control ECU**

**2 Common rail J/C No.2**

**3 Fuse vehicle control actuator 2**

**4 Economy running switch**

**5 Common rail J/C No.1**

**6 J/C GROUND**

This is name of the parts on the diagram and the number corresponds to that on the diagram.

Specification symbol (☐,☒,etc.)
Each wiring is installed to the vehicles relevant to the specification that the specification symbol designates.

SAPH12Z080200002

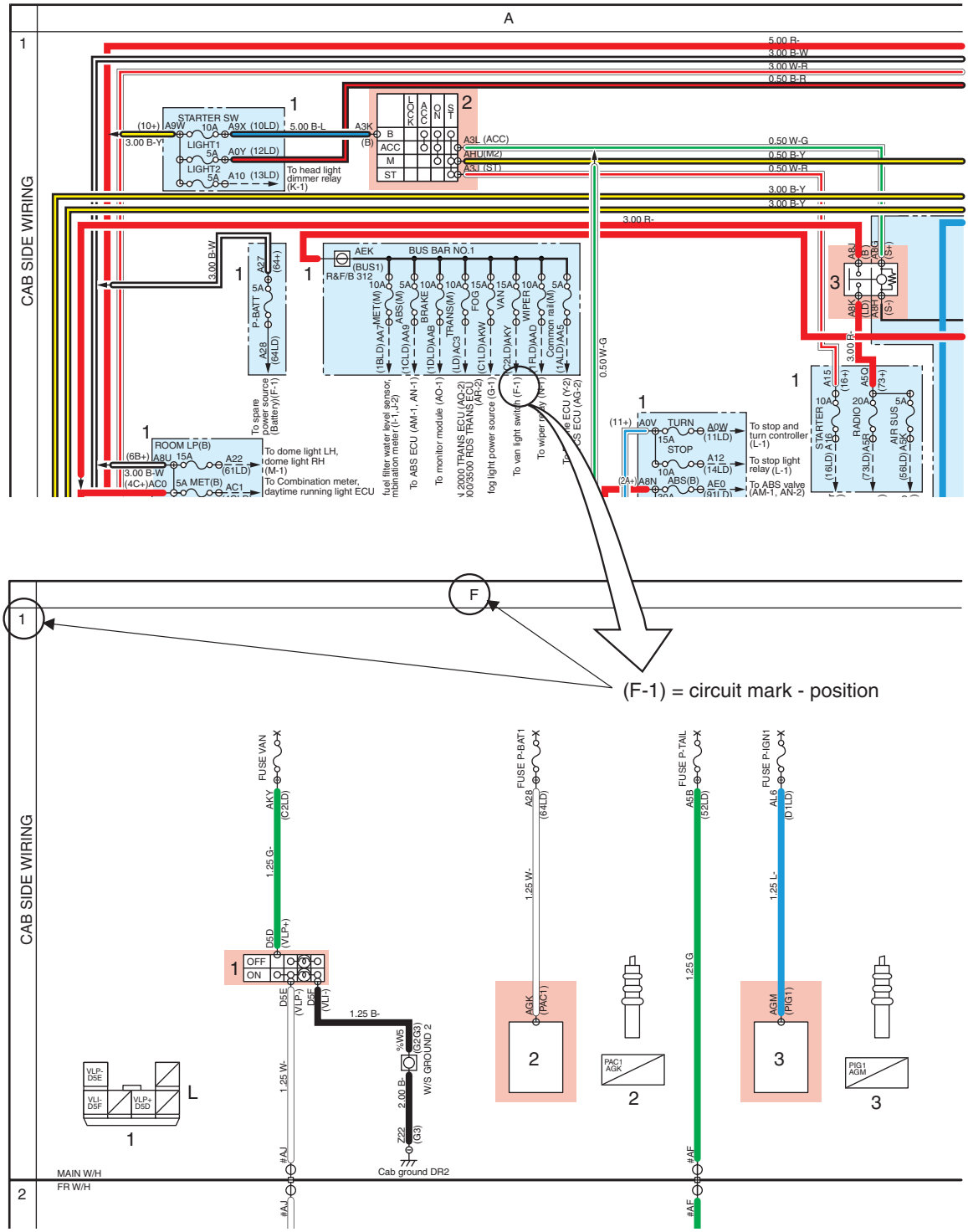


SAPH12Z080200003

3. Position of connector

- The position of an electrical equipment connector of the wiring diagram (example: M-2) in the car can be seen.

Position of connectors M

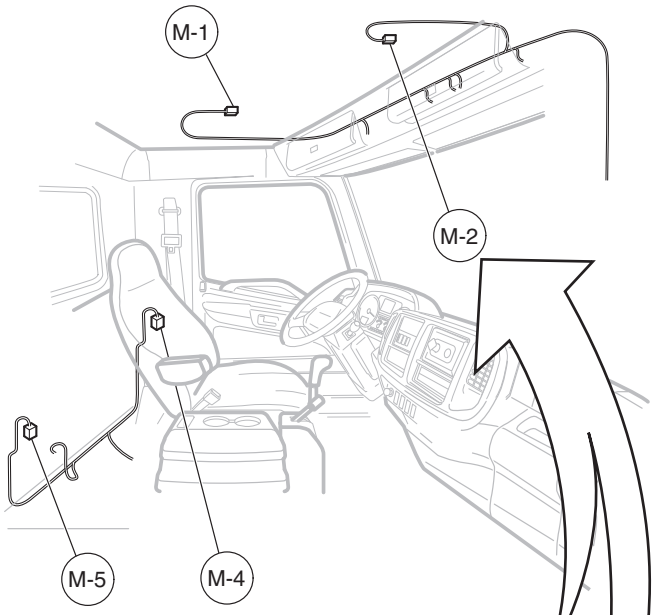


M-1: Dome light LH
M-2: Dome light RH
M-4: Courtesy switch front LH
M-5: Courtesy switch front RH

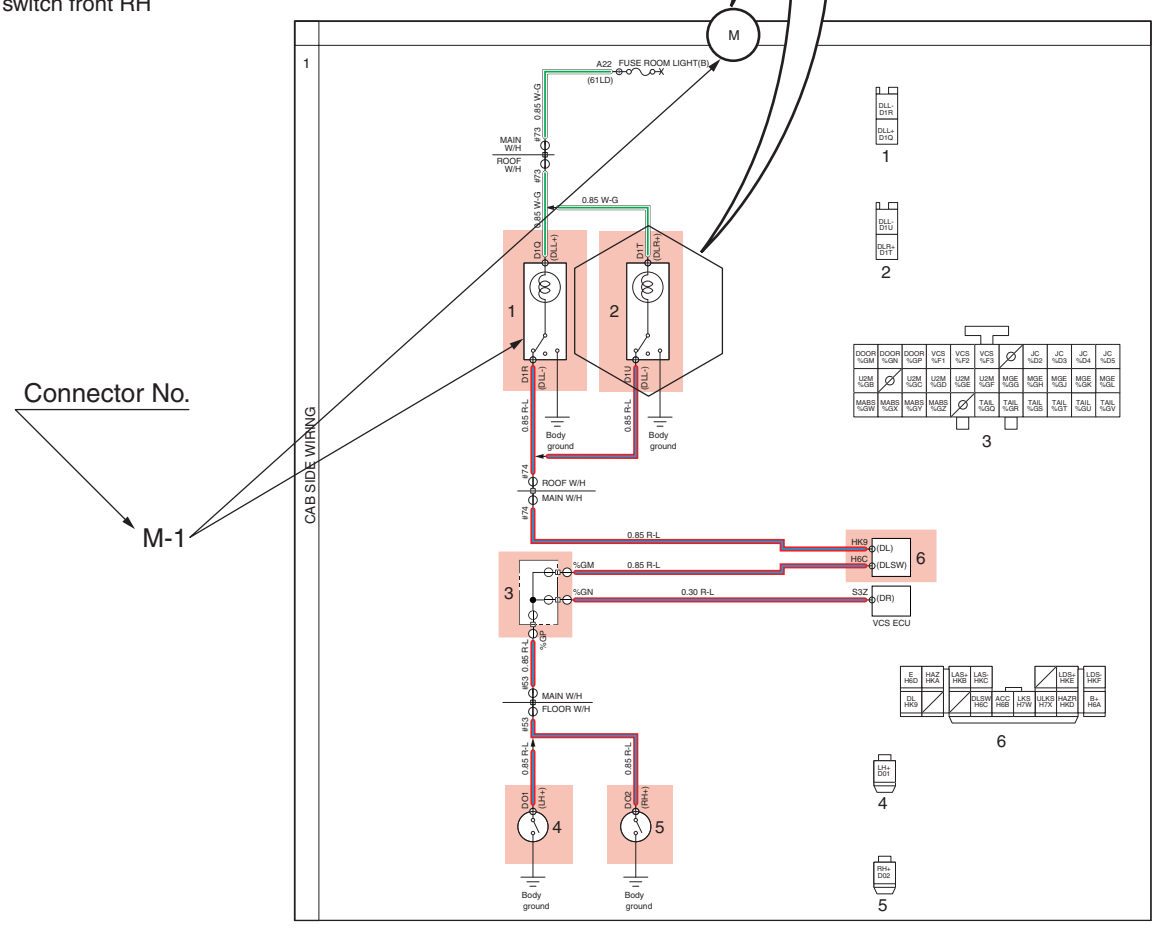


SAPH12Z080200004

4. Connector
   - The shape, the color, and the part No. of electrical equipment connectors are listed in order of the connector No. The position of the connector can be seen (example: M-2).

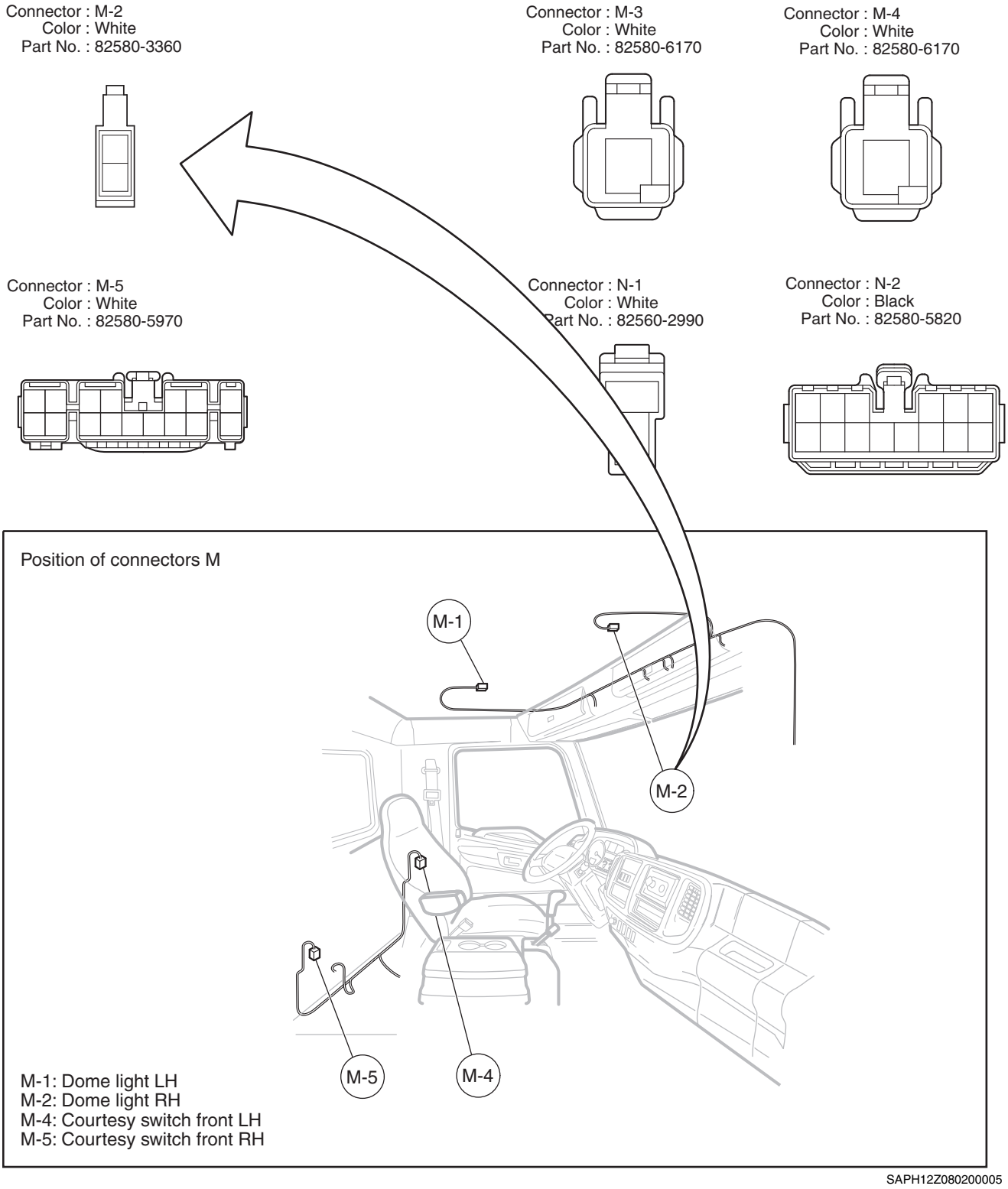


SAPH12Z080200005

5. Connector List

- The connector No. can be used as the keyword to search for the page on which a connector (example: O-1) is listed.

| Diagram symbol | Connector No. | Electrical equipment name | Wiring diagram listing page | Three-dimensional connector diagram (Position of connector) listing page |
|---|---|---|---|---|
| O | O-1 | Mirror heater switch | EL02-54 | EL02-158 |
| | O-3 | Heater and light mirror LH | EL02-54 | EL02-160 |
| | O-4 | Heater and light mirror RH | EL02-54 | EL02-160 |
| P | P-1 | Remote control mirror switch | EL02-55 | EL02-157 |
| | P-2 | Remote control mirror LH | EL02-55 | EL02-160 |
| | P-3 | Remote control mirror RH | EL02-55 | EL02-160 |
| Q | Q-2 | Horn switch | EL02-56 | EL02-163 |
| | Q-3 | Horn (Low) | EL02-56 | EL02-165 |
| R | R-2 | Air horn switch | EL02-57 | EL02-158 |
| | R-3 | Air horn magnetic valve | EL02-57 | EL02-165 |
| | R-4 | J/C GROUND 4P | EL02-57 | EL02-156 |
| S | S-1 | Cigarette lighter or accessory socket | EL02-58 | EL02-158 |
| T | T-1 | Driver seat master switch | EL02-59 | EL02-164 |
| | T-2 | Passenger seat sub switch | EL02-59 | EL02-164 |
| | T-3 | Power window motor (Driver seat) | EL02-59 | EL02-164 |
| | T-4 | Power window motor (Passenger seat) | EL02-59 | EL02-164 |
| U | U-2 | Key-less entry controller | EL02-60 | EL02-162 |
| | U-3 | Power door lock motor (Driver side) | EL02-61 | EL02-164 |
| | U-4 | Power door lock motor (Passenger side) | EL02-60 | EL02-164 |
| | U-5 | Power door lock controller | EL02-60 | EL02-162 |
| | U-6 | Power door lock switch (Driver side) | EL02-61 | EL02-164 |
| V | V-2 | Radio/Audio unit | EL02-63 | EL02-164 |
| | V-3 | Front speaker LH | EL02-63 | EL02-164 |
| | V-4 | Front speaker RH | EL02-63 | EL02-164 |
| | V-5 | Common rail J/C No.2 | EL02-63 | EL02-155 |
| | V-6 | Common rail J/C No.1 | EL02-63 | EL02-155 |
| W | W-2 | Heater and cooler unit | EL02-64 | EL02-165 |
| | W-3 | Blower motor | EL02-64 | EL02-165 |
| | W-4 | Blower switch | EL02-64 | EL02-165 |
| | W-5 | Air conditioner switch | EL02-65 | EL02-165 |
| | W-7 | Pressure switch | EL02-65 | EL02-165 |
| | W-9 | Common rail J/C No.2 | EL02-65 | EL02-155 |

SAPH12Z080200006

# SPECIFICATION SYMBOL LIST

EN12Z0802J100002

| Circuit name | | Specification symbol | Specifications | Page |
|---|---|---|---|---|
| A | POWER SUPPLY CIRCUIT | ○ | Models equipped with 6 cylinder engine | EL02-16 |
| B | ENGINE STARTING CIRCUIT: MODELS EQUIPPED WITH EATON FS SERIES MANUAL TRANSMISSION AND ALLISON 2200HS, 2200RDS/2500HS, 2500RDS AND 3000RDS/3500RDS AUTOMATIC TRANSMISSION | □ | Models equipped with ALLISON 3000RDS/3500RDS automatic transmission | EL02-22 |
| | | ○ | Models equipped with ALLISON 2200HS/2500HS and 2200RDS/2500RDS automatic transmission | |
| | | ⋈ | Models equipped with 6 cylinder engine and EATON FS series manual transmission | |
| | | ✡ | Engine main wire | |
| D | GLOW PLUG CIRCUIT | ○ | Models equipped with 6 cylinder engine and Glow control unit and glow plugs | EL02-24 |
| E | CHARGING CIRCUIT | □ | Models equipped with 6 cylinder engine | EL02-25 |
| | | ⊠ | Engine main wire | |
| | | △ | Engine RH wire | |
| F | SPARE POWER SOURCE CIRCUIT | — | Common to all models | EL02-26 |
| G | FOG LIGHT POWER SOURCE CIRCUIT | — | Common to all models | EL02-27 |

| Circuit name | | Specification symbol | Specifications | Page |
|---|---|---|---|---|
| H | GROUND CIRCUIT |  | Models equipped with HYDRO MAX brake | EL02-28 |
| | |  | Models equipped with full air brake | |
| | |  | Models equipped with air horn | |
| | |  | Models equipped with air suspension dump | |
| | |  | Models equipped with power window | |
| | |  | Models equipped with ALLISON 3000RDS/ 3500RDS automatic transmission | |
| | |  | Models equipped without power window | |
| | |  | Models equipped with key-less entry | |
| | |  | Models equipped with ALLISON 2200HS/ 2500HS and 2200RDS/2500RDS automatic transmission | |
| | |  | Models equipped with power door lock | |
| | |  | Models equipped with ABS (For HYDRO MAX brake E version) | |
| | |  | Models equipped with economy running switch | |
| | |  | Engine main wire | |
| | |  | Engine muffler sub wire front | |
| | |  | Models equipped with differential lock | |
| | |  | Models equipped with 50 gallon dual fuel tank | |
| | |  | Engine muffler sub wire rear | |

| Circuit name | | Specification symbol | Specifications | Page |
|---|---|---|---|---|
| I | METER CIRCUIT (CAB SIDE) | ○ | Models equipped with 50 gal.X2 fuel tank | EL02-32 |
| | | ◪ | Models equipped with center parking brake | |
| | | ⊠ | Models equipped with wheel parking brake and full air brake | |
| | | ◬ | Models equipped with 6 cylinder engine and EATON FS series manual transmission and HYDRO MAX brake | |
| | | ⊞ | Models equipped with ALLISON 2200HS/ 2500HS and 2200RDS/2500RDS and 3000RDS/ 3500RDS automatic transmission | |
| | | ◭ | Models equipped with 6 cylinder engine and EATON FS series manual transmission and full air brake | |
| | | ✡ | Models equipped with air horn | |
| | | ▱ | Models equipped with HYDRO MAX brake | |
| | | ⊠ | Models equipped with rear differential lock | |
| J | METER CIRCUIT (CHASSIS SIDE) | ○ | Models equipped with 50 gal.X2 fuel tank | EL02-36 |
| | | ◪ | Models equipped with center parking brake | |
| | | ⊠ | Models equipped with wheel parking brake and full air brake | |
| | | ◬ | Models equipped with 6 cylinder engine and EATON FS series MTM and HYDRO MAX brake | |
| | | ⊞ | Models equipped with ALLISON 2200HS/ 2500HS and 2200RDS/2500RDS and 3000RDS/ 3500RDS automatic transmission | |
| | | ◭ | Models equipped with 6 cylinder engine and EATON FS series manual transmission and full air brake | |
| | | ✡ | Models equipped with air horn | |
| | | ▱ | Models equipped with HYDRO MAX brake | |
| | | ⊠ | Models equipped with rear differential lock | |
| K | DAYTIME RUNNING LIGHT (DRL) AND TAIL LIGHT CIR- CUIT | ⊟ | Models equipped with power window | EL02-40 |
| | | △ | Models equipped without power window | |

| Circuit name | | Specification symbol | Specifications | Page |
|---|---|---|---|---|
| L | STOP AND TURN LIGHT CIRCUIT | ⊞ | Models equipped with EATON FS series manual transmission | EL02-44 |
| | | ⏃ | Models equipped with stop light switch (For HYDRO MAX brake) | |
| | | ⊕ | Models equipped with stop light switch (For full air brake) | |
| | | ⊠ | Models equipped with ALLISON 2200HS/ 2500HS and 2200RDS/2500RDS automatic transmission | |
| | | ▥ | Models equipped with ALLISON 3000RDS/ 3500RDS automatic transmission automatic transmission | |
| | | ⋈ | Models equipped with HYDRO MAX brake | |
| | | ○ | Models equipped with Back-up Buzzer | |
| M | ROOM LIGHT CIRCUIT | — | Common to all models | EL02-48 |
| N | WIPER AND WASHER CIRCUIT | — | Common to all models | EL02-49 |
| O | MIRROR HEATER CIRCUIT | — | Common to all models | EL02-50 |
| P | REMOTE CONTROL MIRROR CIRCUIT | — | Common to all models | EL02-51 |
| Q | ELECTRIC HORN CIRCUIT | — | Common to all models | EL02-52 |
| R | AIR HORN CIRCUIT | — | Common to all models | EL02-53 |
| S | CIGARETTE LIGHTER CIRCUIT OR ACCESSORY SOCKET CIRCUIT | — | Common to all models | EL02-54 |
| T | POWER WINDOW CIRCUIT | — | Common to all models | EL02-55 |
| U | POWER DOOR LOCK AND KEY-LESS ENTRY CIRCUIT | □ | Models equipped with power window | EL02-56 |
| | | △ | Models equipped with key-less entry | |
| V | AUDIO CIRCUIT | — | Common to all models | EL02-58 |
| W | MANUAL AIR CONDITIONER CIRCUIT | ○ | Engine main wire | EL02-60 |
| | | △ | Engine main wire | |
| X | COMMON RAIL CIRCUIT-1 (CAB SIDE) | ⏦ | Models equipped with manual transmission | EL02-62 |
| | | ✡ | Engine main wire | |
| | | △ | Engine RH wire | |

| Circuit name | | Specification symbol | Specifications | Page |
|---|---|---|---|---|
| Y | COMMON RAIL CIRCUIT-1 (CHASSIS SIDE) | ✡ | Engine main wire | EL02-66 |
| | | ≈ | Models equipped with manual transmission | |
| | | △ | Engine RH wire | |
| Z | COMMON RAIL CIRCUIT-2: MANUAL TRANSMISSION AND EXHAUST BRAKE | — | Common to all models | EL02-70 |
| AA | COMMON RAIL CIRCUIT-3: AUTOMATIC TRANSMISSION AND EXHAUST BRAKE | ○ | Models equipped with ALLISON 2200HS/ 2500HS and 2200RDS/2500RDS automatic transmission | EL02-72 |
| | | ≈ | Models equipped with ALLISON 3000RDS/ 3500RDS automatic transmission | |
| AC | COMMON RAIL CIRCUIT-5: MODELS EQUIPPED WITH PTO | ○ | Engine main wire | EL02-76 |
| | | △ | Engine muffler sub wire RR | |
| AD | COMMON RAIL CIRCUIT-6: | ○ | Engine main wire | EL02-78 |
| | | △ | Engine RH wire | |
| AE | COMMON RAIL CIRCUIT-7: DPR: INTAKE THROTTLE VALVE POSITION SENSOR | ○ | Engine main wire | EL02-80 |
| | | ⊠ | Engine muffler sub wire RR | |
| | | ◐ | Engine fuel sub wire | |
| | | △ | Engine RH wire | |
| AF | COMMON RAIL CIRCUIT-8: FS CRUISE | ○ | Models equipped with full air brake | EL02-84 |
| | | △ | Models equipped with HYDRO MAX brake | |
| AG | VEHICLE CONTROL ECU CIR-CUIT-1 | ⊠ | Models equipped with ABS (For full air brake) | EL02-86 |
| | | ○ | Models equipped with ABS (For HYDRO MAX brake E version) | |

| Circuit name | | Specification symbol | Specifications | Page |
|---|---|---|---|---|
| AH | VEHICLE CONTROL ECU CIRCUIT-2 | ○ | Models equipped with ALLISON 2200HS/2500HS and 2200RDS/2500RDS automatic transmission | EL02-90 |
| | | ≈ | Models equipped with ALLISON 3000RDS/3500RDS automatic transmission | |
| | | ⊠ | Models equipped with center parking brake | |
| | | ⊟ | Models equipped with wheel parking brake | |
| | | △ | Models equipped with ABS (For full air brake) | |
| | | ⚠ | Models equipped with ABS (For HYDRO MAX brake E version) | |
| AI | VEHICLE CONTROL ECU CIRCUIT-3 | ○ | Models equipped with full air brake | EL02-94 |
| | | △ | Models equipped with HYDRO MAX brake | |
| AJ | VEHICLE CONTROL ECU CIRCUIT-4 | ✡ | Models equipped with manual transmission | EL02-96 |
| AL | DEF SCR CIRCUIT | — | Common to all models | EL02-98 |
| | | □ | Engine muffler sub wire FR | |
| | | ⊠ | Engine muffler sub wire RR | |
| AM | ABS CIRCUIT-1 (FOR FULL AIR BRAKE) | — | Common to all models | EL02-102 |
| AN | ABS CIRCUIT-2 (FOR HYDRO MAX BRAKE E VERSION) | — | Common to all models | EL02-106 |
| AO | HYDRO MAX SYSTEM CIRCUIT | ○ | Models equipped with 6 cylinder engine | EL02-108 |
| AQ | AUTOMATIC TRANSMISSION CIRCUIT-1: EQUIPPED WITH ALLISON 2000 AUTOMATIC TRANSMISSION | △ | Models equipped with HYDRO MAX brake | EL02-110 |
| | | ○ | Models equipped with full air brake | |
| AR | AUTOMATIC TRANSMISSION CIRCUIT-2: EQUIPPED WITH ALLISON 3000RDS AUTOMATIC TRANSMISSION | △ | Models equipped with HYDRO MAX brake | EL02-114 |
| | | ○ | Models equipped with full air brake | |
| AT | DLC CONNECTOR CIRCUIT (16P) | □ | Models equipped with 6 cylinder engine | EL02-118 |
| AU | DLC CONNECTOR CIRCUIT (9P) | ⊠ | Models equipped with 6 cylinder engine | EL02-120 |
| AV | MANUAL DIFFERENTIAL LOCK CIRCUIT | □ | Models equipped with 6 cylinder engine | EL02-121 |

| Circuit name | | Specification symbol | Specifications | Page |
|---|---|---|---|---|
| AW | AIR DRYER CIRCUIT | ○ | Models equipped with 6 cylinder engine | EL02-122 |
| AX | AIR SUSPENSION DUMP CIRCUIT | ⊠ | Models equipped with wheel parking brake and full air brake | EL02-124 |
| | | ⊿ | Models equipped with center parking brake | |
| AY | CAN (CONTROLLER AREA NETWORK) COMMUNICATION CIRCUIT | △ | Models equipped with HYDRO MAX brake | EL02-126 |
| | | M | Models equipped with manual transmission | |
| | | ∾ | Models equipped with ALLISON 3000RDS/ 3500RDS automatic transmission | |
| | | □ | Models equipped with ALLISON 2200HS/ 2500HS and 2200RDS/2500RDS and 3000RDS/ 3500RDS automatic transmission | |
| AZ | CAN (CONTROLLER AREA NETWORK) COMMUNICATION CIRCUIT (ENGINE) | ○ | Engine main wire | EL02-128 |
| | | ⊠ | Engine muffler sub wire FR | |
| | | □ | Engine muffler sub wire RR | |
| BA | CAN (CONTROLLER AREA NETWORK) COMMUNICATION CIRCUIT (DPR) | ○ | Engine main wire | EL02-132 |
| | | ⊠ | Engine muffler sub wire RR | |
| | | □ | Engine muffler sub wire FR | |
| BB | TELEMATICS CIRCUIT | — | Common to all models | EL02-136 |
| BD | BLOCK HEATER CIRCUIT | — | Common to all models | EL02-137 |
| BE | ENGINE ECU JUNCTION CIRCUIT-1 | ⊿ | Models equipped with HYDRO MAX brake | EL02-138 |
| | | ⊠ | Models equipped with air brake | |
| BF | ENGINE ECU JUNCTION CIRCUIT-2 | ⊿ | Models equipped with center parking brake | EL02-140 |
| | | ⊠ | Models equipped with wheel parking brake | |
| BG | WIRE TO WIRE CONNECTOR (OUT OF THE BULK HEAD CONNECTOR BOX) | — | Models equipped with HYDRO MAX brake | EL02-142 |
| BH | WIRE TO WIRE CONNECTOR (IN THE BULK HEAD CONNECTOR BOX) | — | Common to all models | EL02-147 |
| BI | Signal check connector | — | Common to all models | EL02-156 |

# DIAGRAM

EN12Z0802J100004

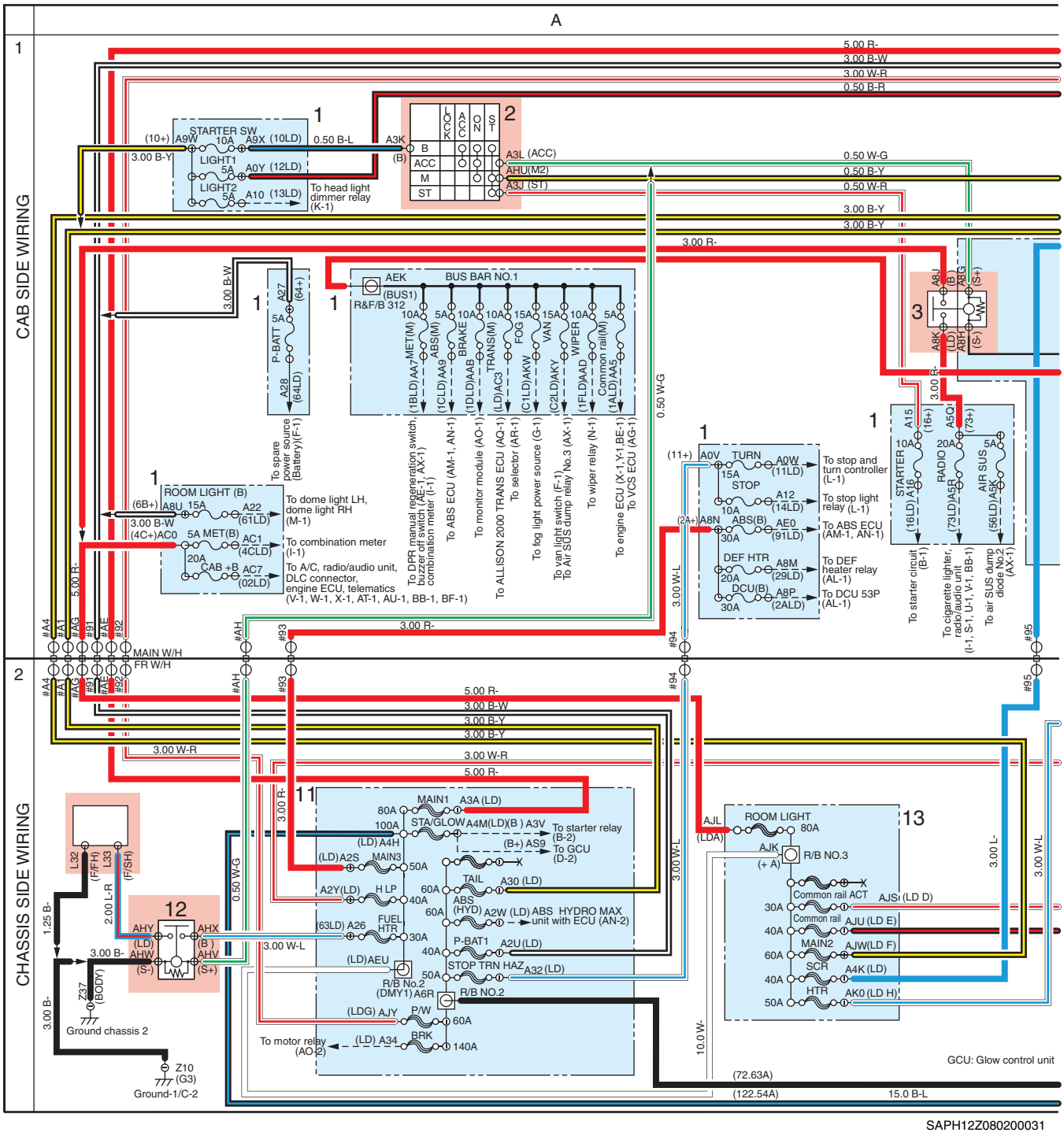


**A POWER SUPPLY CIRCUIT**

1 **Fuse and relay block B**
2 **Starter switch**
3 **Power accessory relay No.1**
4 **Power relay No.1**
5 **Power relay No.2**
6 **Tail light relay No.1**
7 **Tail light relay No.2**
8 **Power relay No.3**
9 **Power relay No.4**
10 **Fuel filter heater sensor**
11 **Relay block No.2**
12 **Power accessory relay No.2**
13 **Fuse and relay block A**

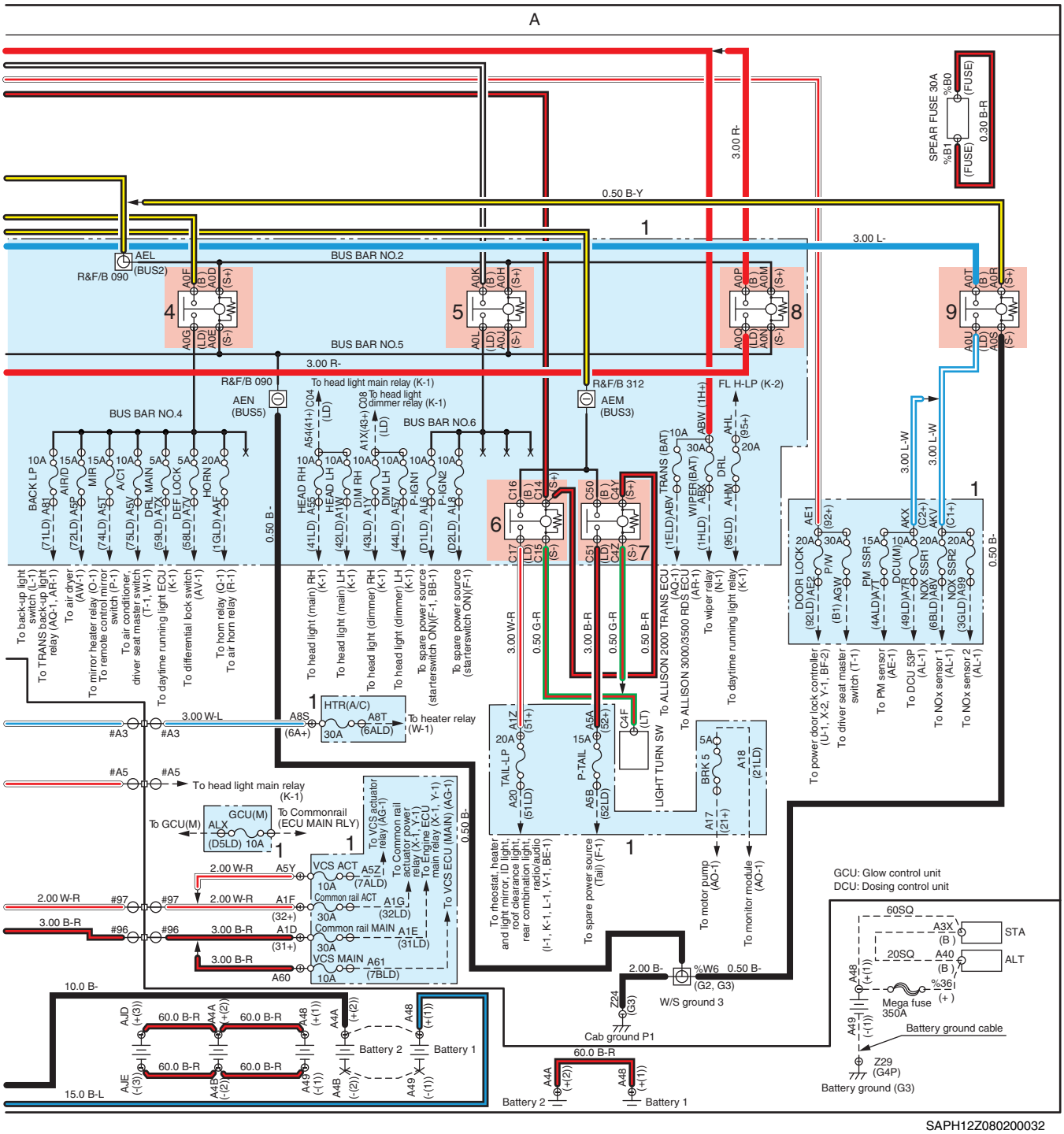


SAPH12Z080200032

A

1

CAB SIDE WIRING

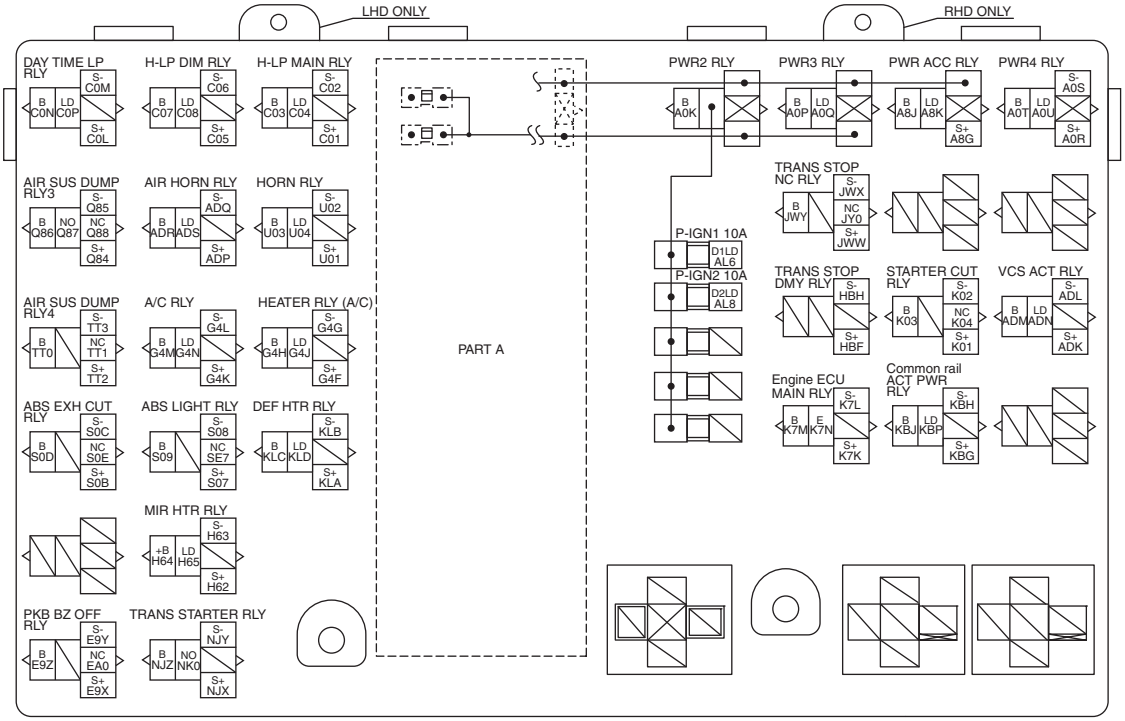


B

1(1/2)

2

CHASSIS SIDE WIRING

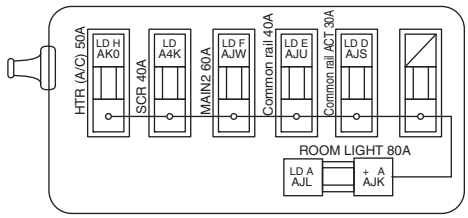


B

13

SAPH12Z080200033

A

Part A

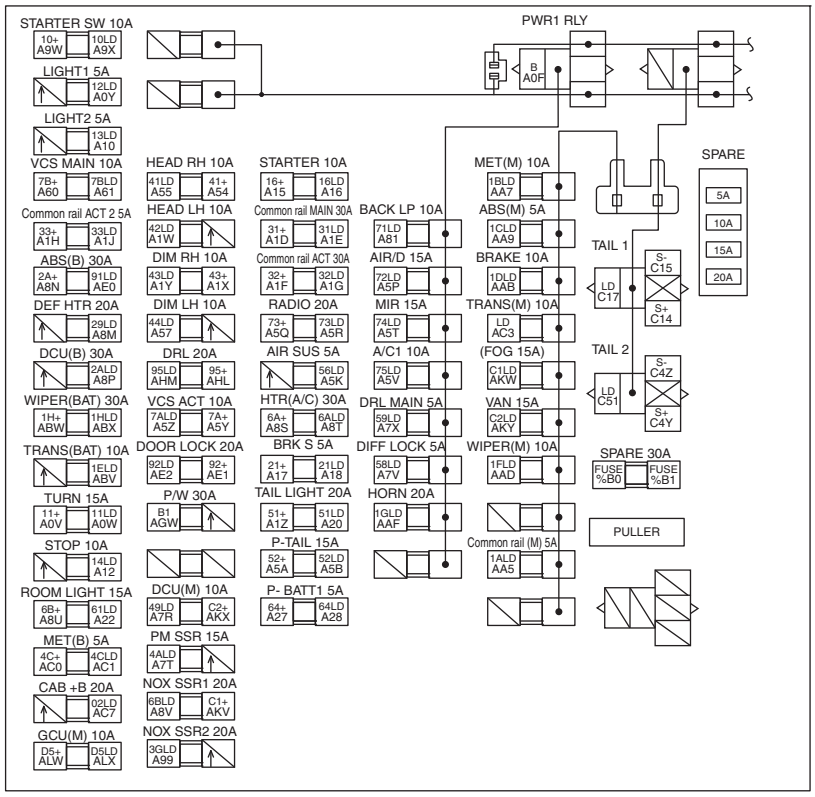


1(2/2)

B

GCU: Glow control unit

SAPH12Z080200034

A

1

CAB SIDE WIRING

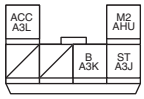


B

2

2

CHASSIS SIDE WIRING

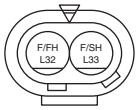


DG

10

SAPH12Z080200035

A

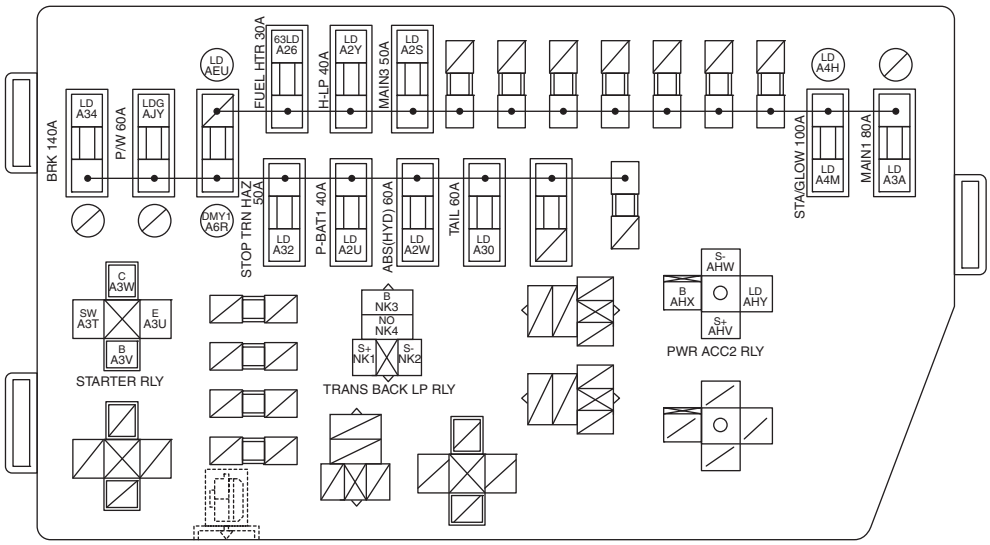


B

11

SAPH12Z080200036

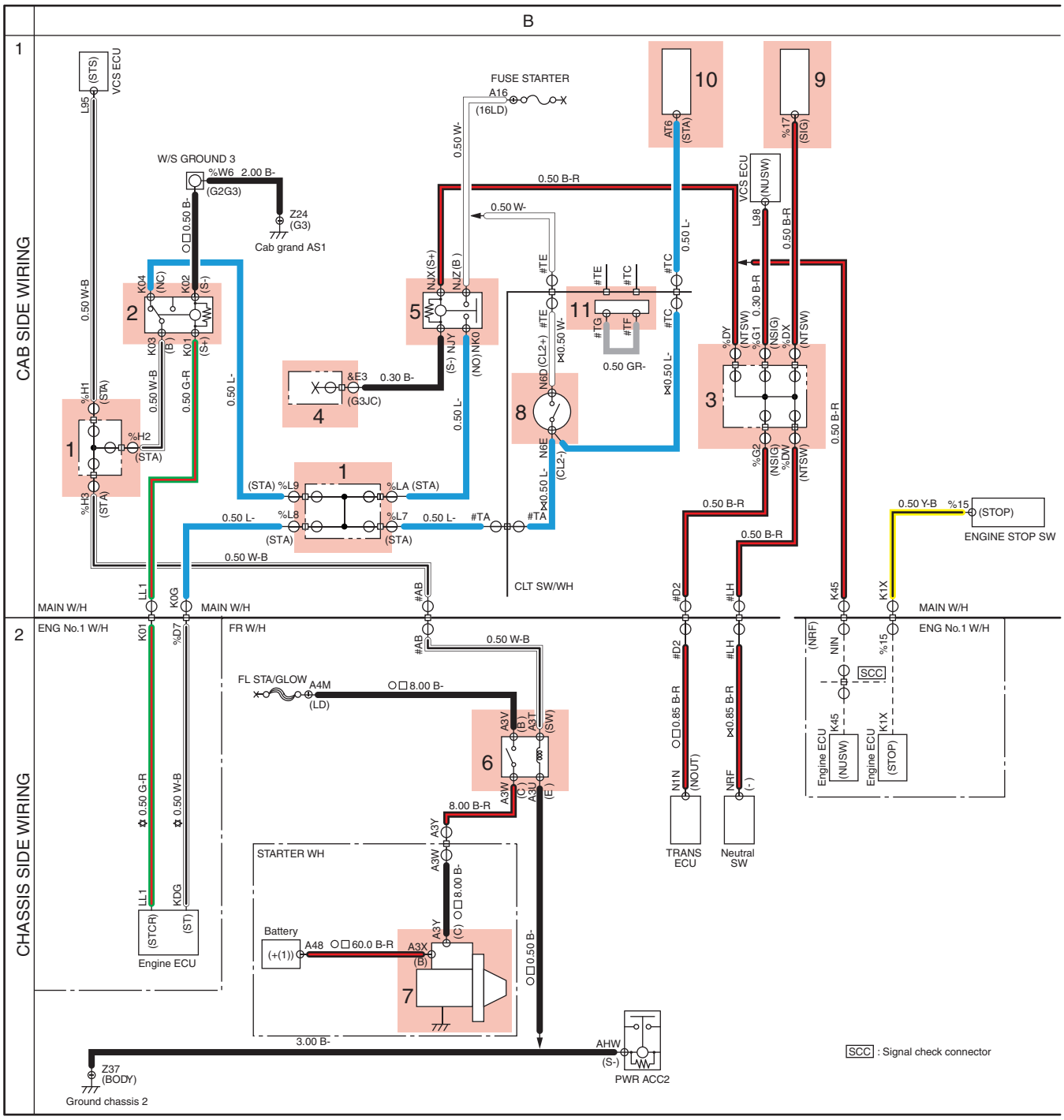


SAPH12Z080200037

**B ENGINE STARTING CIRCUIT: MODELS EQUIPPED WITH EATON FS SERIES MANUAL TRANSMISSION AND ALLISON 2200HS, 2200RDS/2500HS, 2500RDS AND 3000RDS/3500RDS AUTOMATIC TRANSMISSION**

1. Common rail J/C No.2
2. Starter cut relay
3. J/C signal
4. J/C ground
5. TRANS starter relay
6. Starter relay
7. Starter
8. Clutch switch
9. Neutral switch
10. Sub starter switch
11. TRANS short circuit connector

B

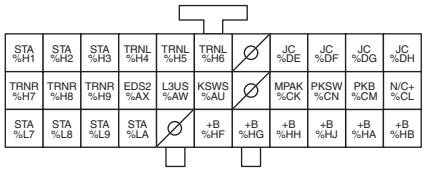

1

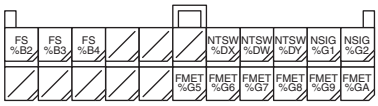

3

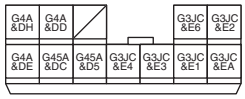

4



DG
8

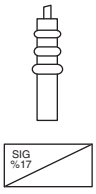

9

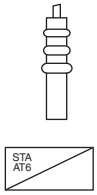

10



11



B
7

SAPH12Z080200038

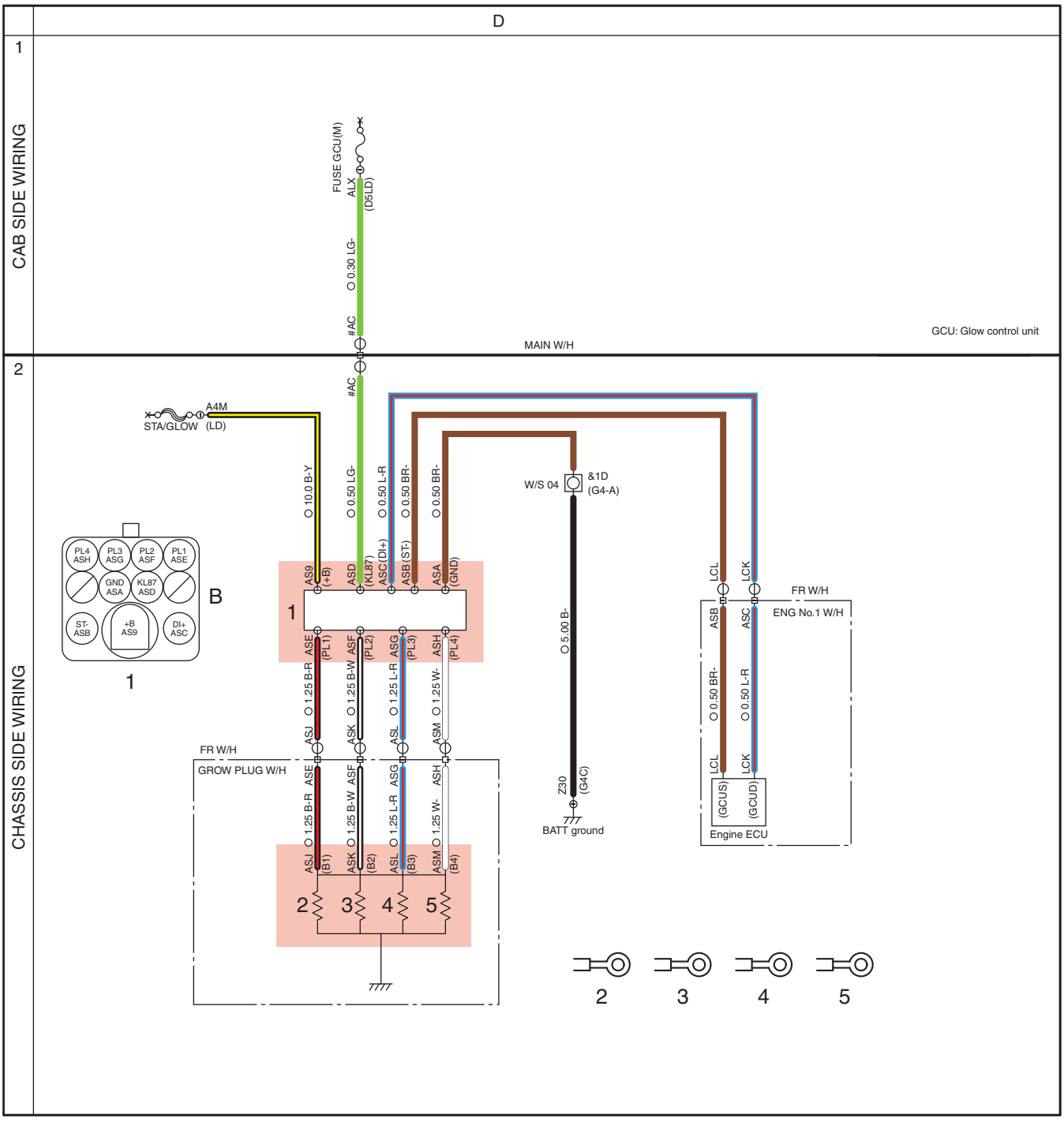


SAPH12Z080200039

**D GLOW PLUG CIRCUIT**

**1 Glow control unit**

**2 Glow plug No.1**

**3 Glow plug No.2**

**4 Glow plug No.3**

**5 Glow plug No.4**

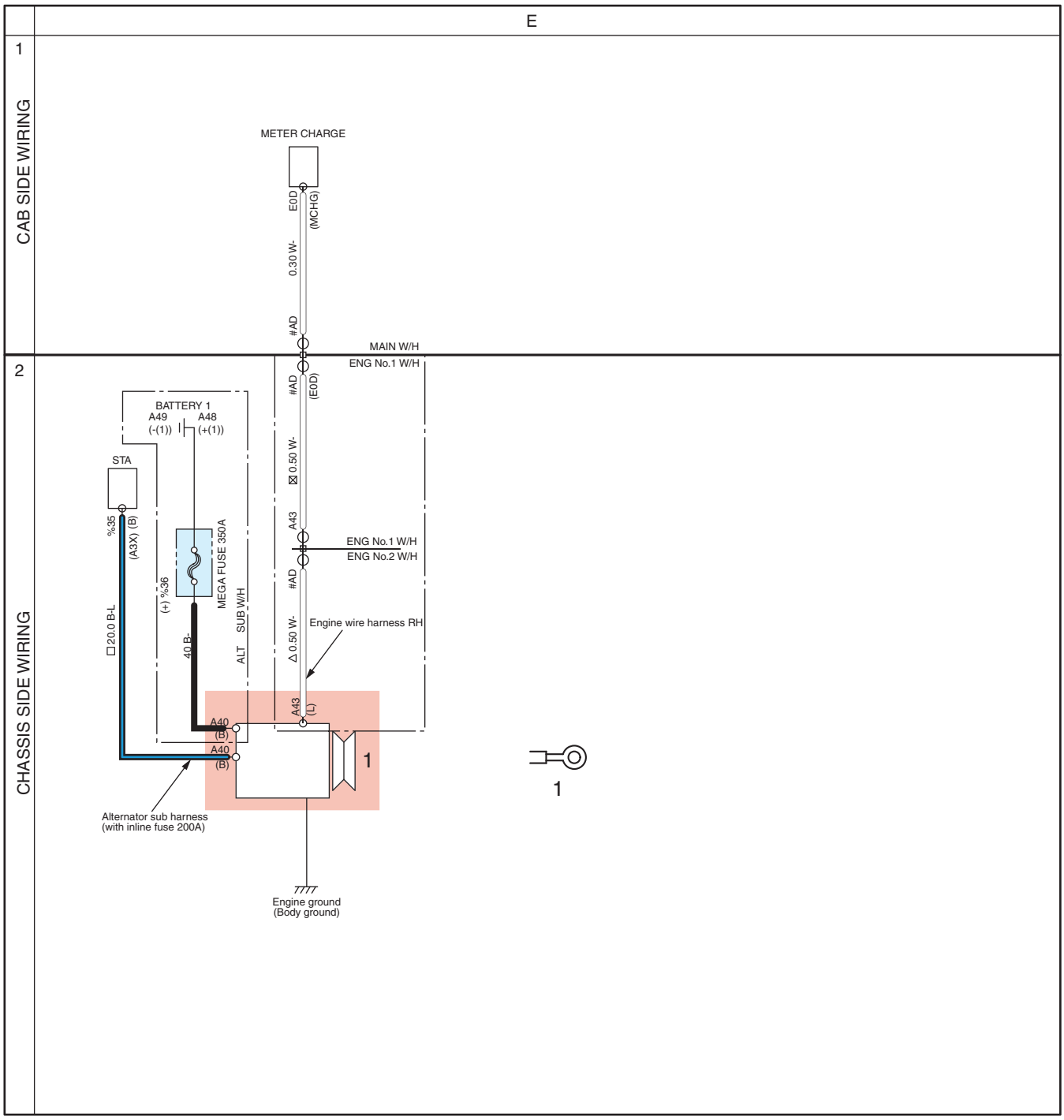


SAPH12Z080200040

**E CHARGING CIRCUIT**

**1 Alternator**

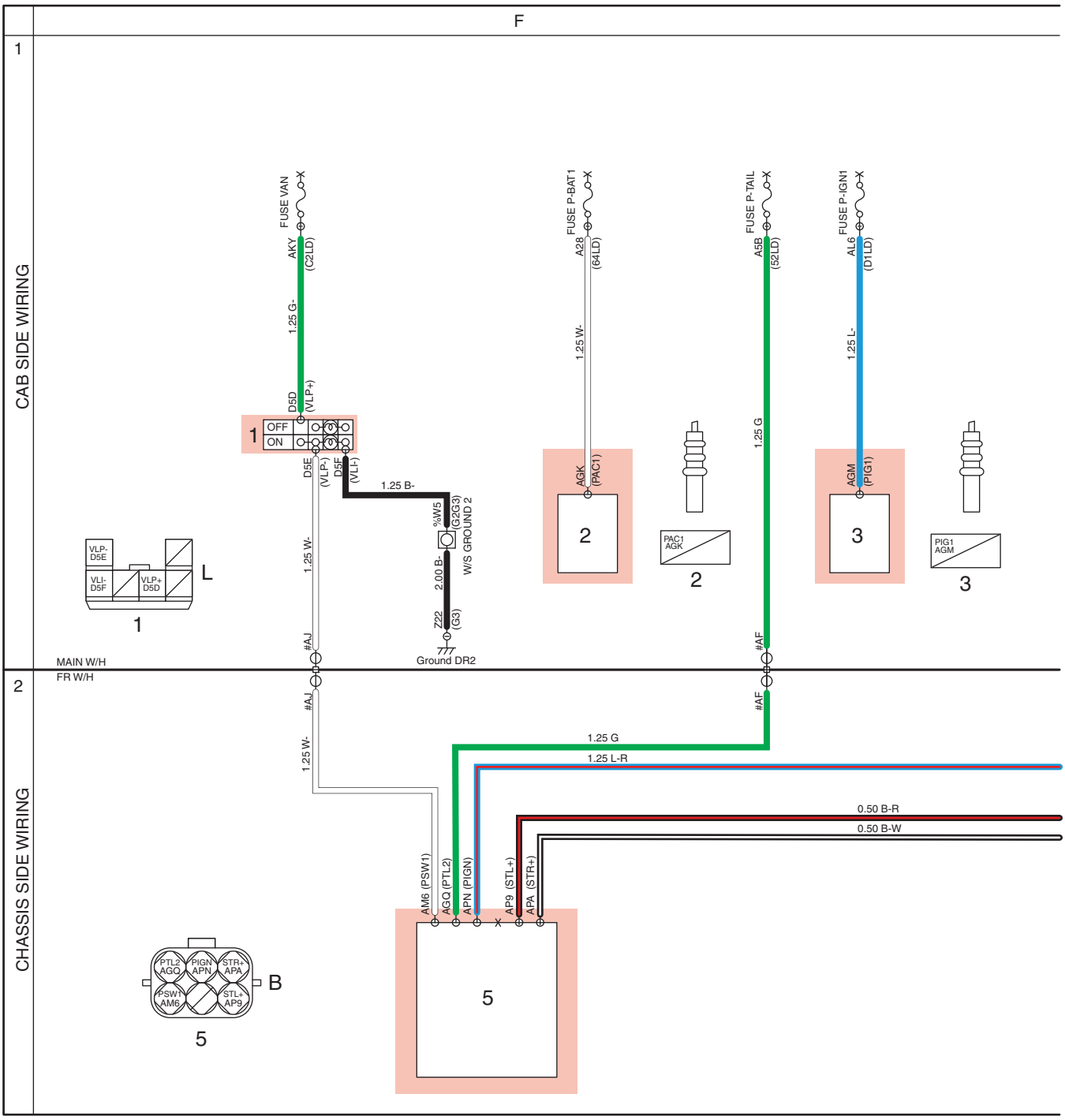


SAPH12Z080200041

**F SPARE POWER SOURCE CIRCUIT**

**1 Van light switch**

**2 Spare power source (For Battery)**

**3 Spare power source (For Starter switch ON)**

**4 Common rail J/C No.2**

**5 Spare power source**

**6 Option connector (For Cab)**

**7 Option connector (For Chassis)**

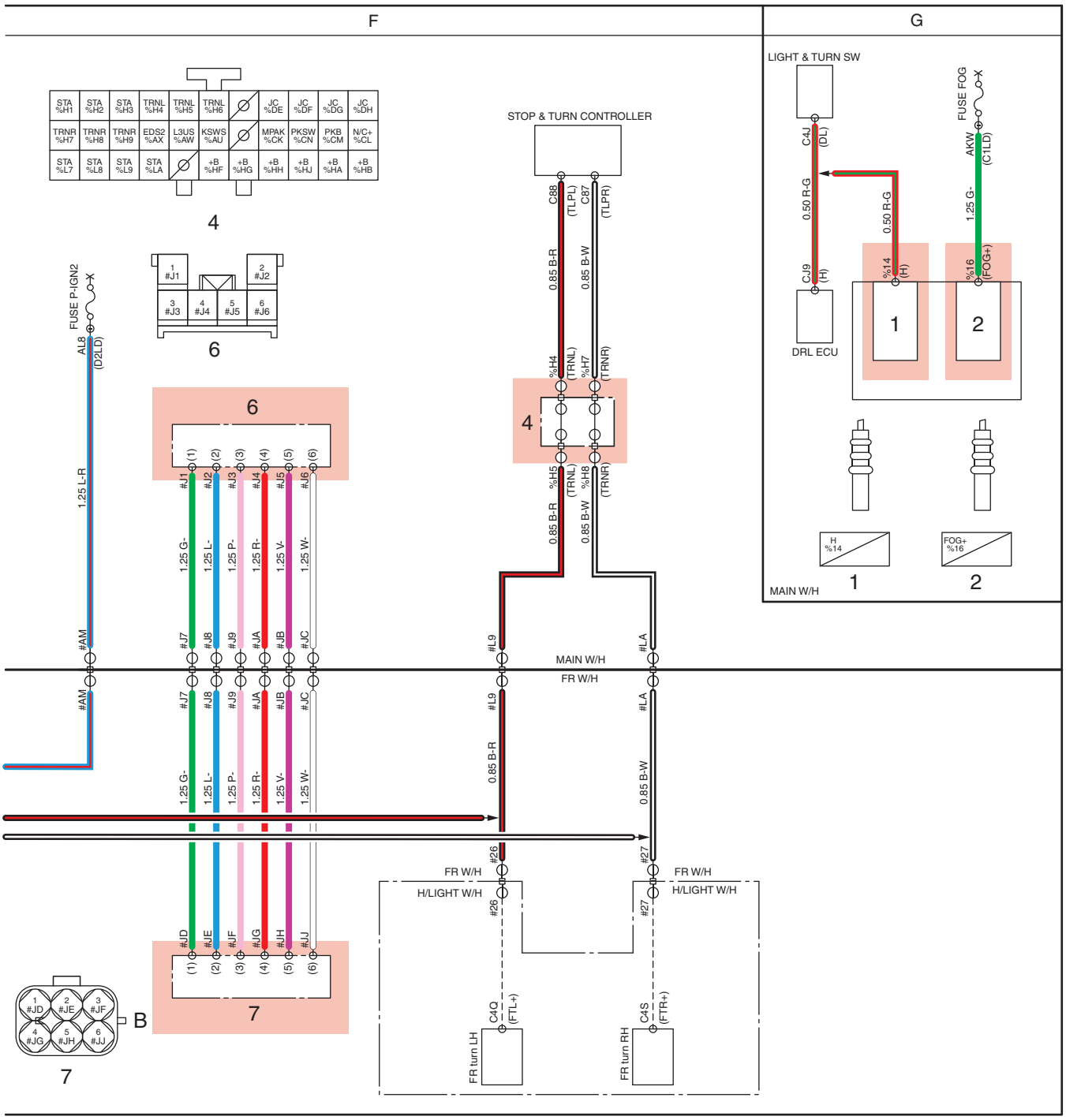


SAPH12Z080200042

**G FOG LIGHT POWER SOURCE CIRCUIT**

**1 Fog light switch**

**2 Fog light power source**

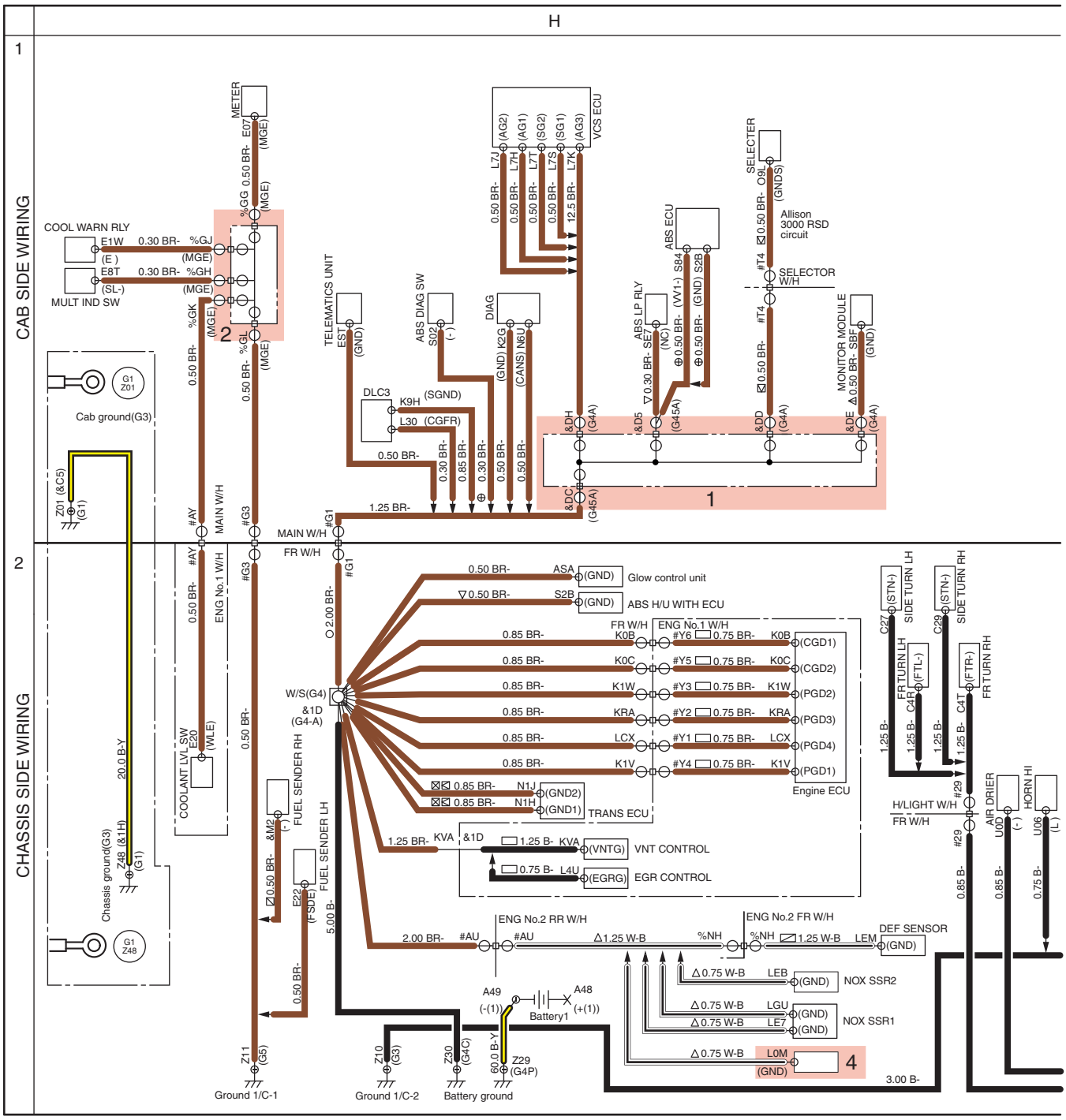


**H GROUND CIRCUIT**

**1 J/C ground**

**2 Common rail J/C No.1**

**3 J/C ground 4P**

**4 PM Sensor**

H




1

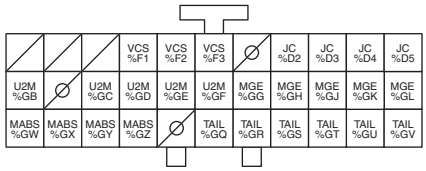


2

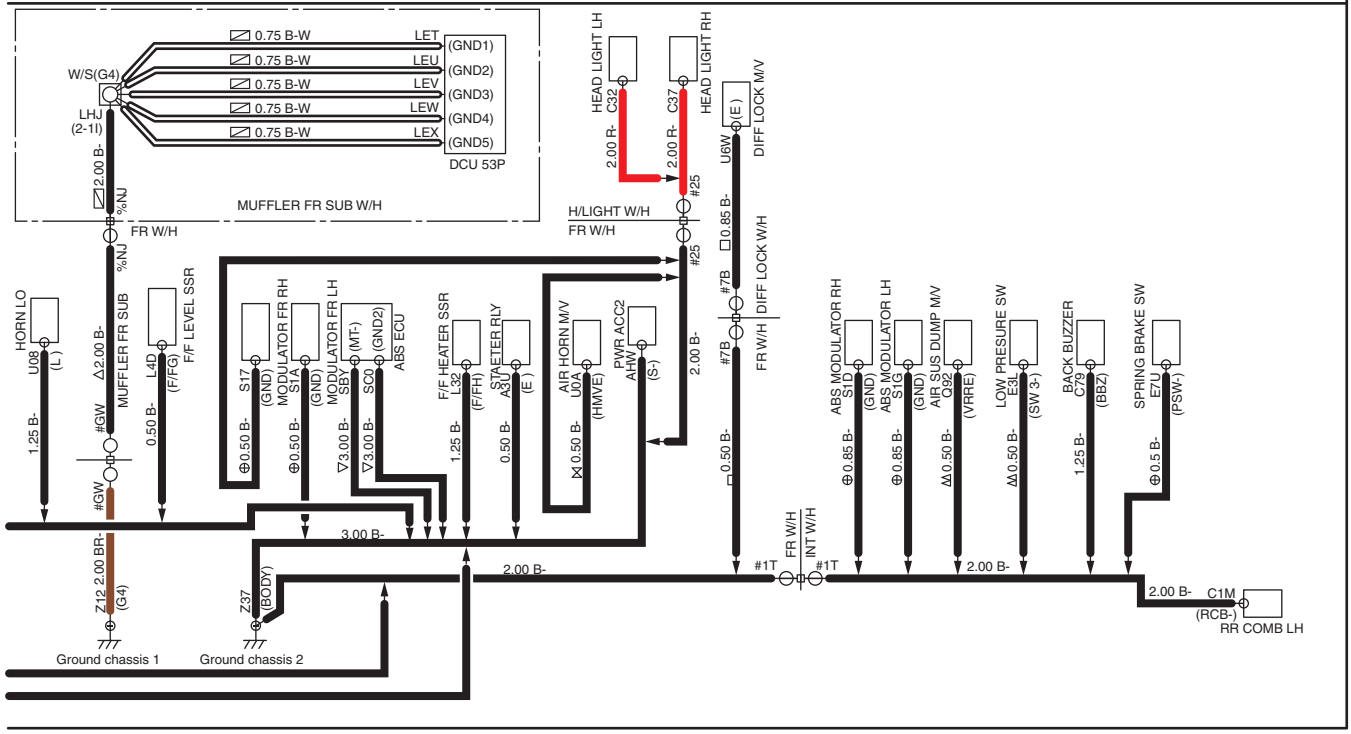


SAPH12Z080200044

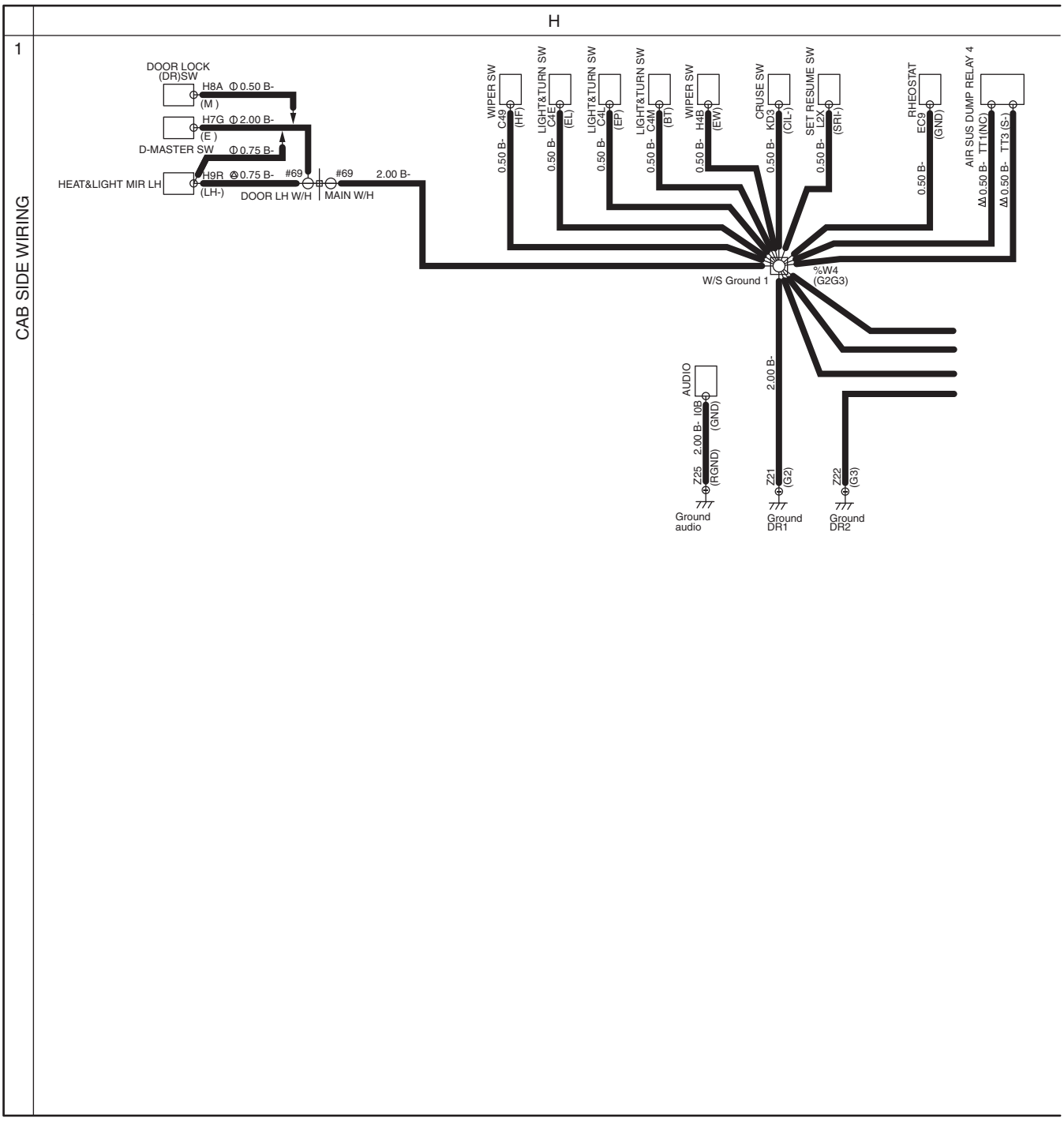


SAPH12Z080200045

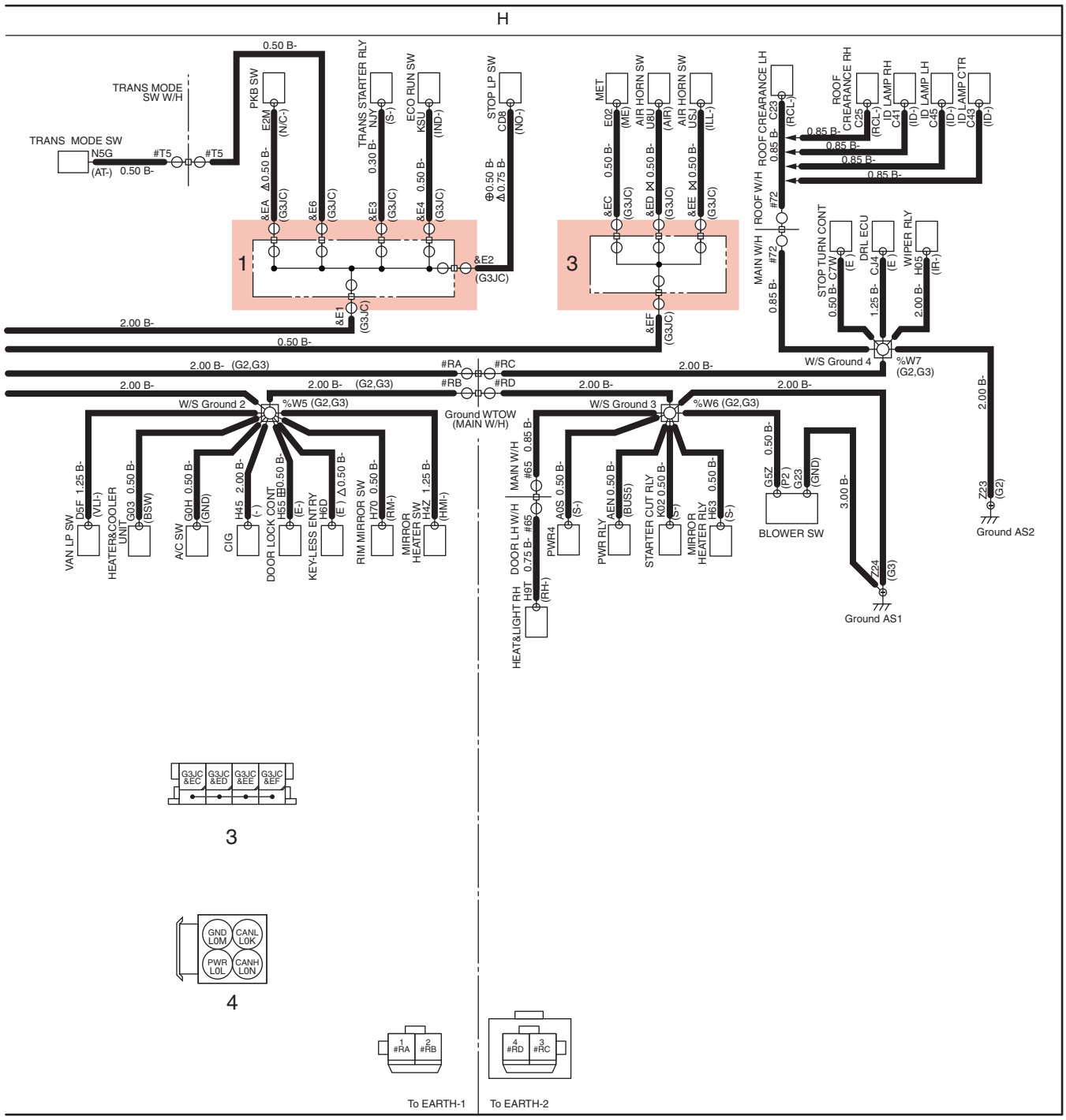


SAPH12Z080200046

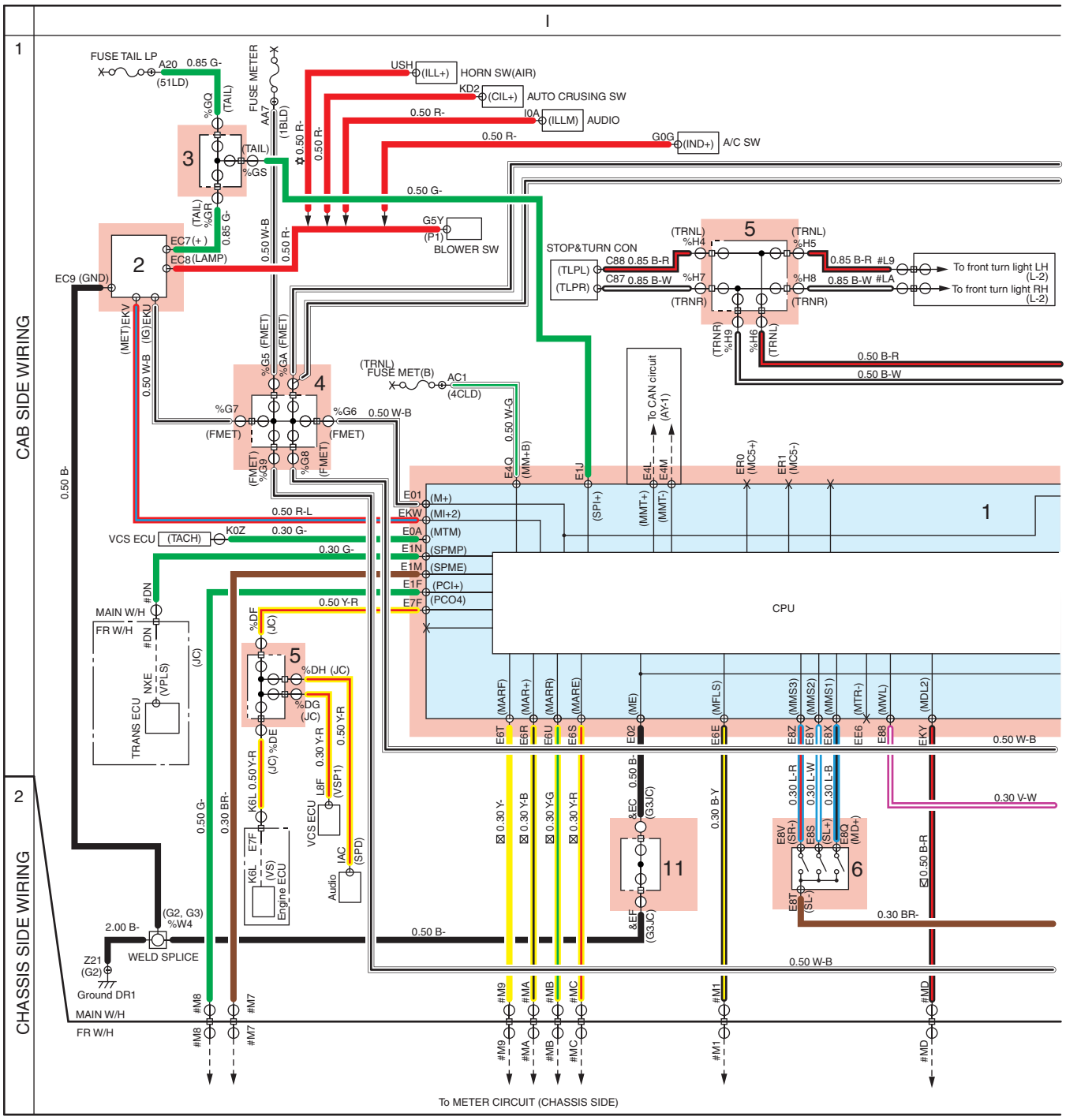


SAPH12Z080200047

**I METER CIRCUIT (CAB SIDE)**

1. Combination meter
2. Rheostat
3. Common rail J/C No.1
4. J/C signal
5. Common rail J/C No.2
6. Information display control switch
7. Coolant warning relay
8. Parking brake off diode (For center parking)
9. Parking brake buzzer off relay (For center parking)
10. Parking switch
11. J/C ground 4P
12. J/C ground
13. Parking brake 4P J/C
14. Air suspension dump diode No.1

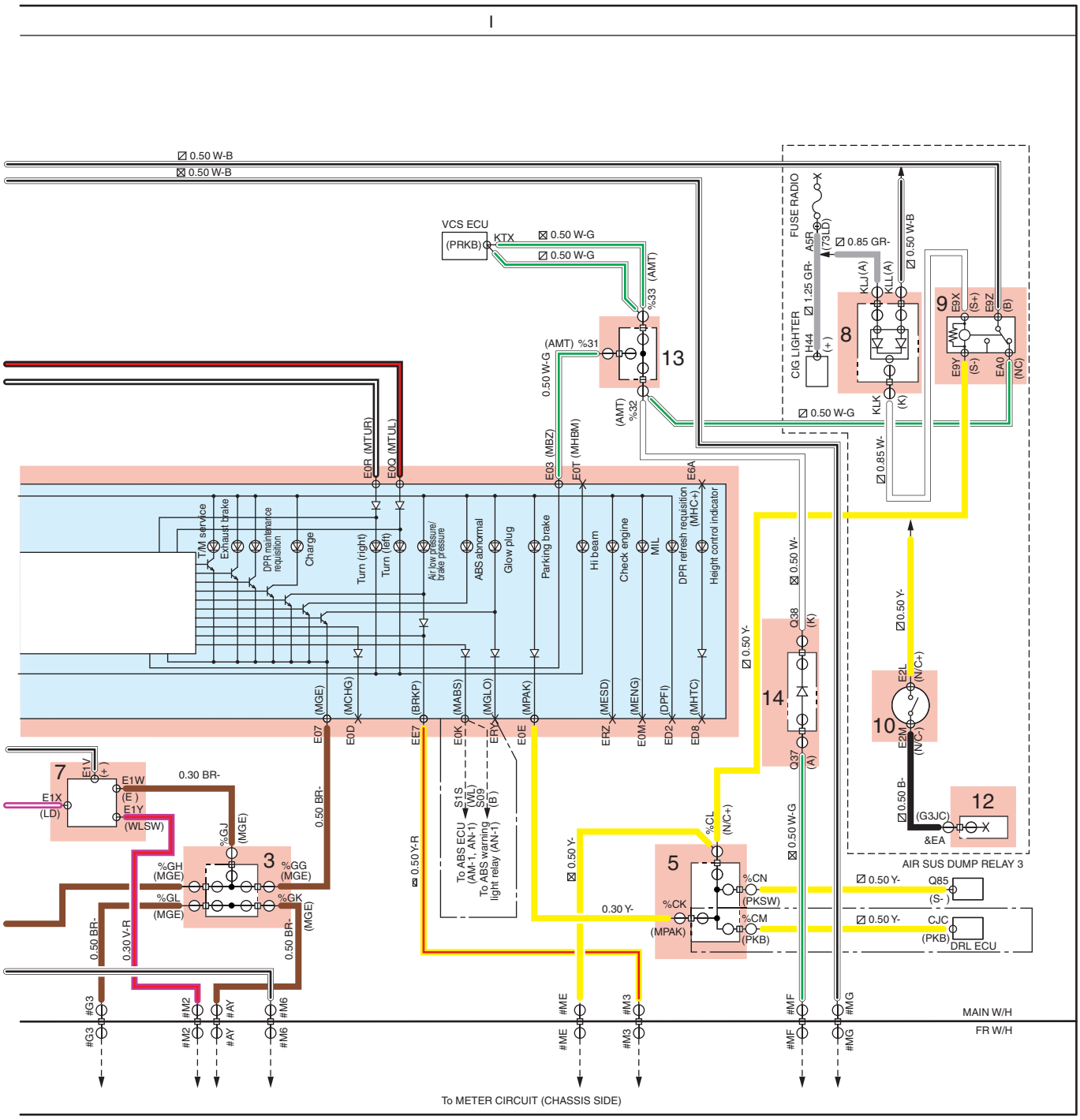


SAPH12Z080200048

I

1 CAB SIDE WIRING

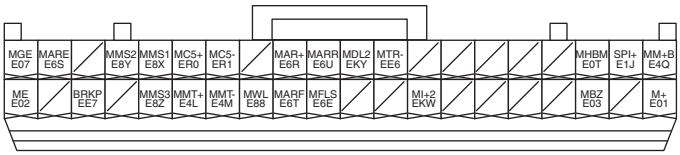


1-1

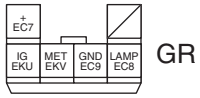


2

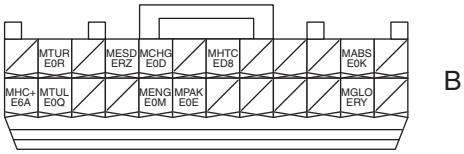


1-2

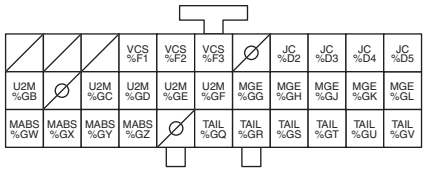


3

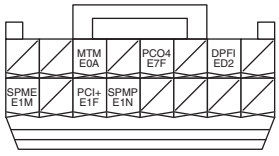


1-3

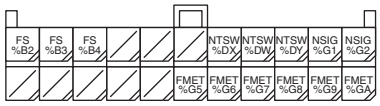


4

2 CHASSIS SIDE WIRING

SAPH12Z080200049

I

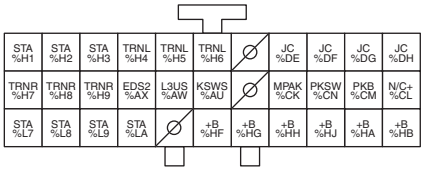


5

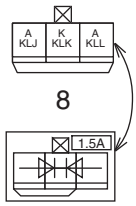


8




12

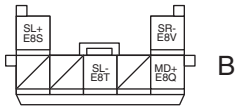


B

6

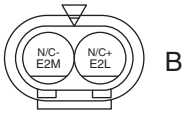


B

10

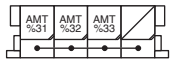


13

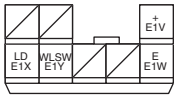


7




11

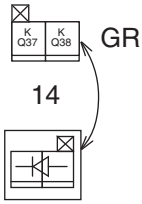


GR

14

SAPH12Z080200050

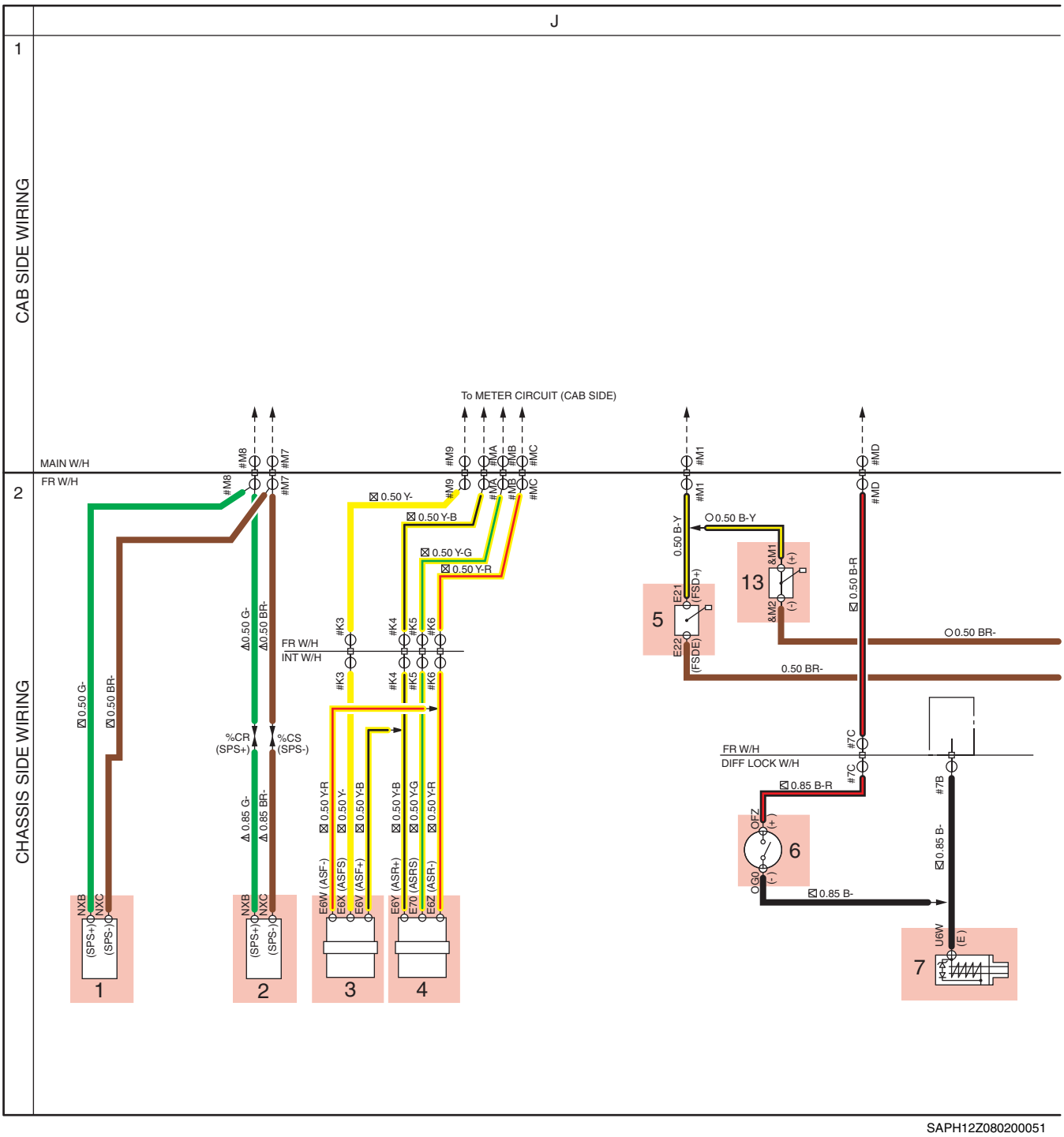


SAPH12Z080200051

**J METER CIRCUIT (CHASSIS SIDE)**

1. Speed sensor (For HYDRO MAX brake and MTM)
2. Speed sensor (For full air brake and MTM)
3. Air gauge sensor front (For full air brake)
4. Air gauge sensor rear (For full air brake)
5. Fuel sensor LH
6. Manual differential lock switch
7. Manual differential lock magnetic valve
8. Coolant level switch
9. Engine coolant level sensor
10. Spring brake switch (For wheel parking)
11. Differential switch
12. Buzzer off switch (For wheel parking)
13. Fuel sensor RH

J

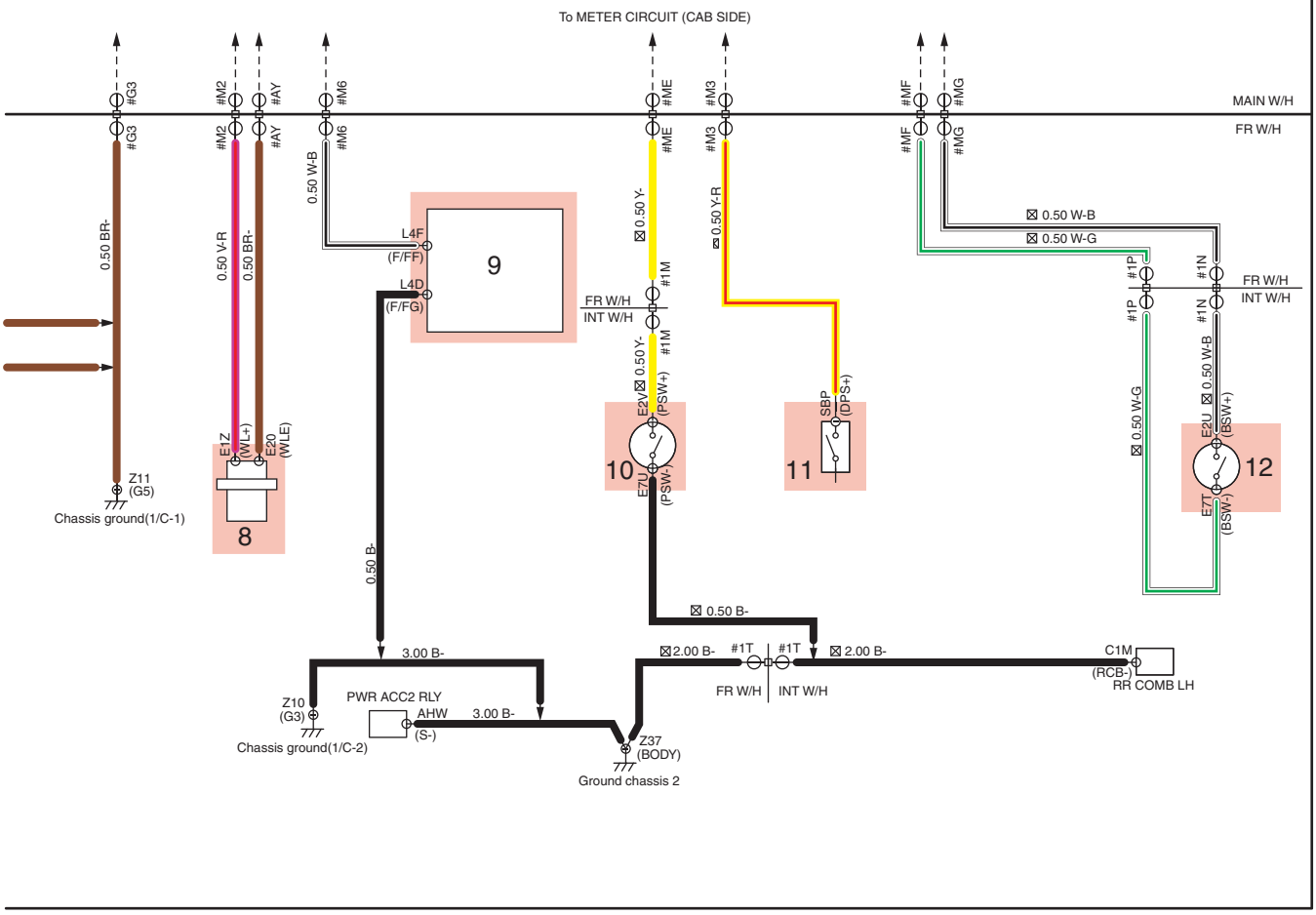


SAPH12Z080200052

J

1

CAB SIDE WIRING

2

CHASSIS SIDE WIRING

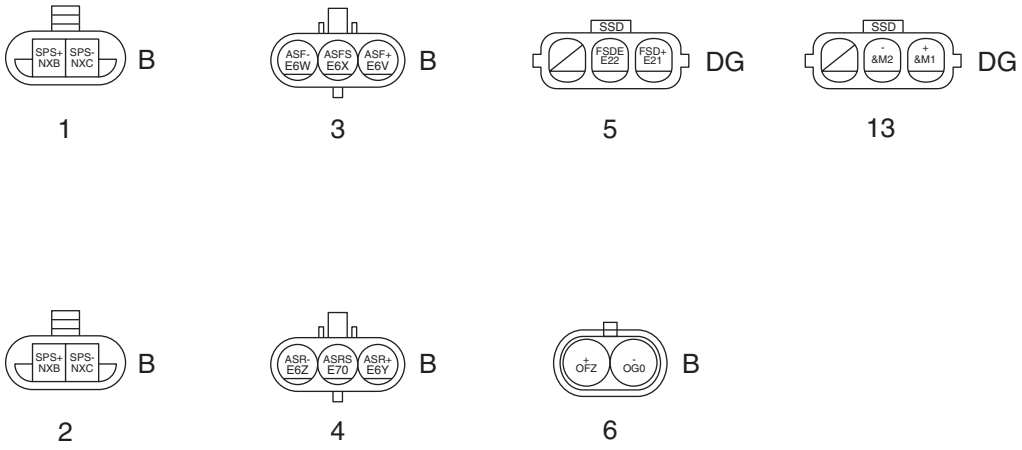


SAPH12Z080200053

J




7 9 11 12




8 10

SAPH12Z080200054

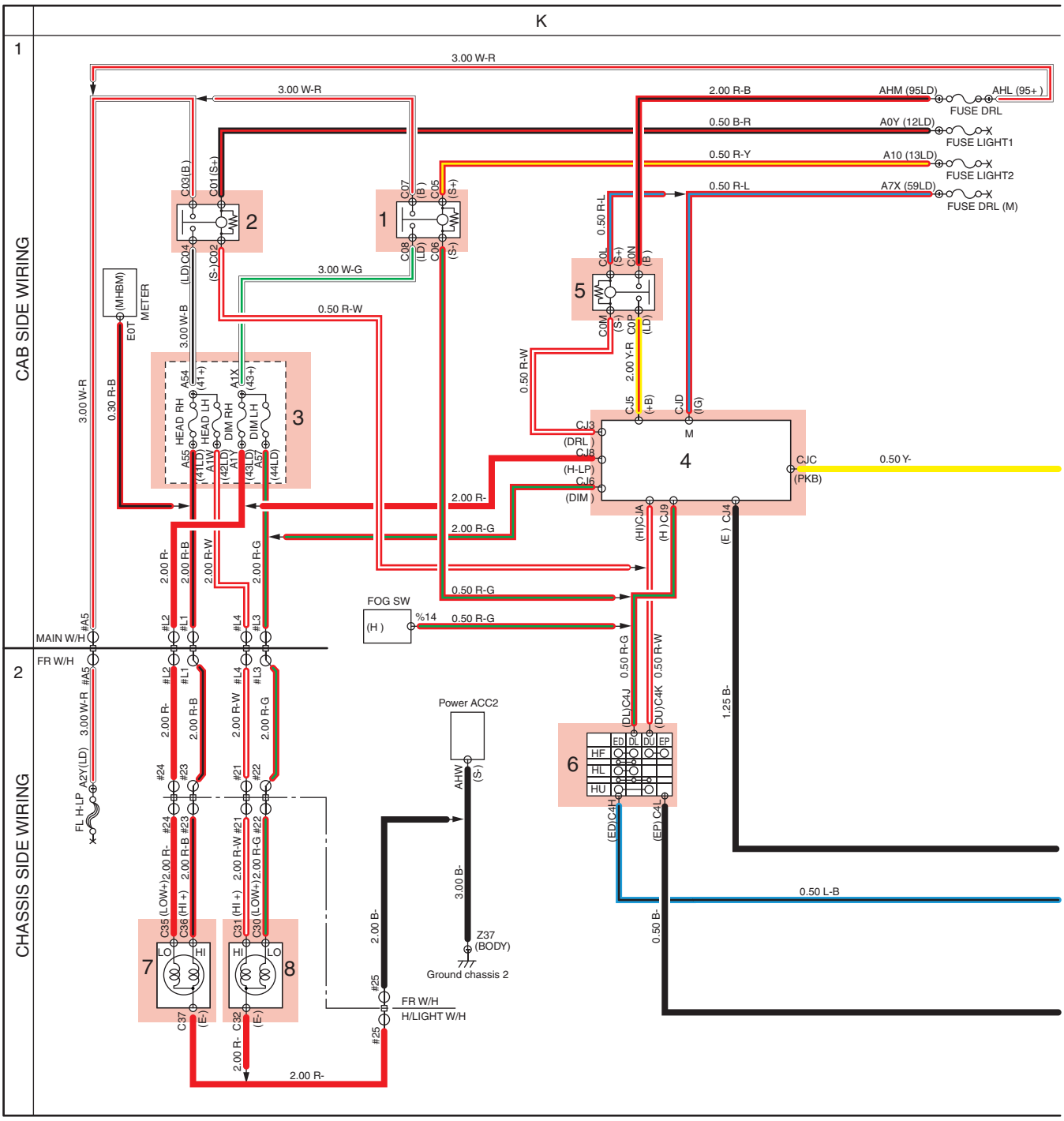


SAPH12Z080200055

**K DAYTIME RUNNING LIGHT (DRL) AND TAIL LIGHT CIRCUIT**

1 Head light dimmer relay
2 Head light main relay
3 Fuse and relay block B
4 Daytime running light ECU
5 Daytime running light relay
6 Light and turn switch
7 Head light RH
8 Head light LH
9 Common rail J/C No. 2
10 Light and turn switch
11 Heater and light mirror RH
12 Heater and light mirror LH
13 Identification light LH

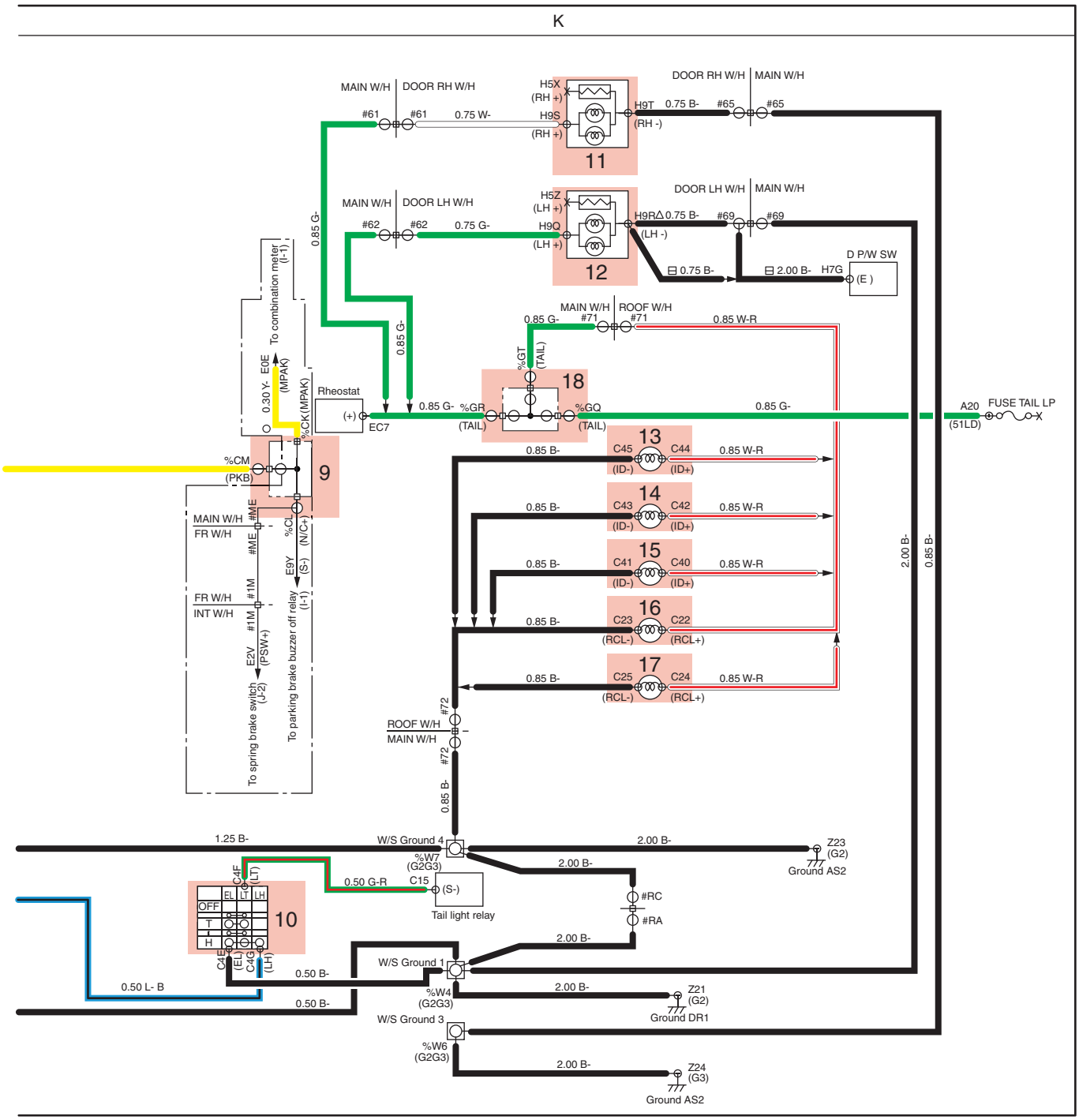


SAPH12Z080200056

**14 Identification light center**

**15 Identification light RH**

**16 Roof clearance light LH**

**17 Roof clearance light RH**

**18 Common rail J/C No.1**

K

CAB SIDE WIRING

1

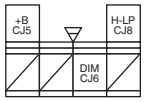


B

4-1

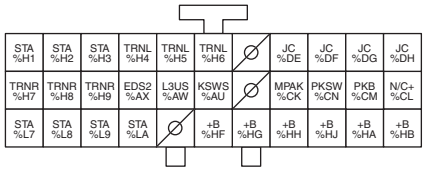


9

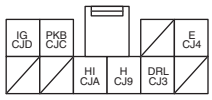


B

4-2

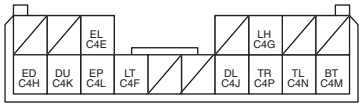


B

10

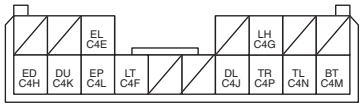


B

6

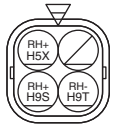


11

CHASSIS SIDE WIRING

2

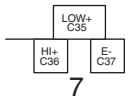


B

7

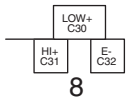


B

8

SAPH12Z080200057

K

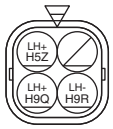


12

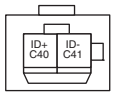


B

15

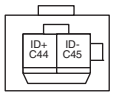


B

13

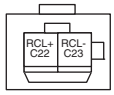


B

16

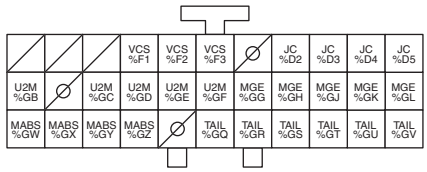


18

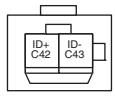


B

14

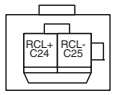


B

17

SAPH12Z080200058

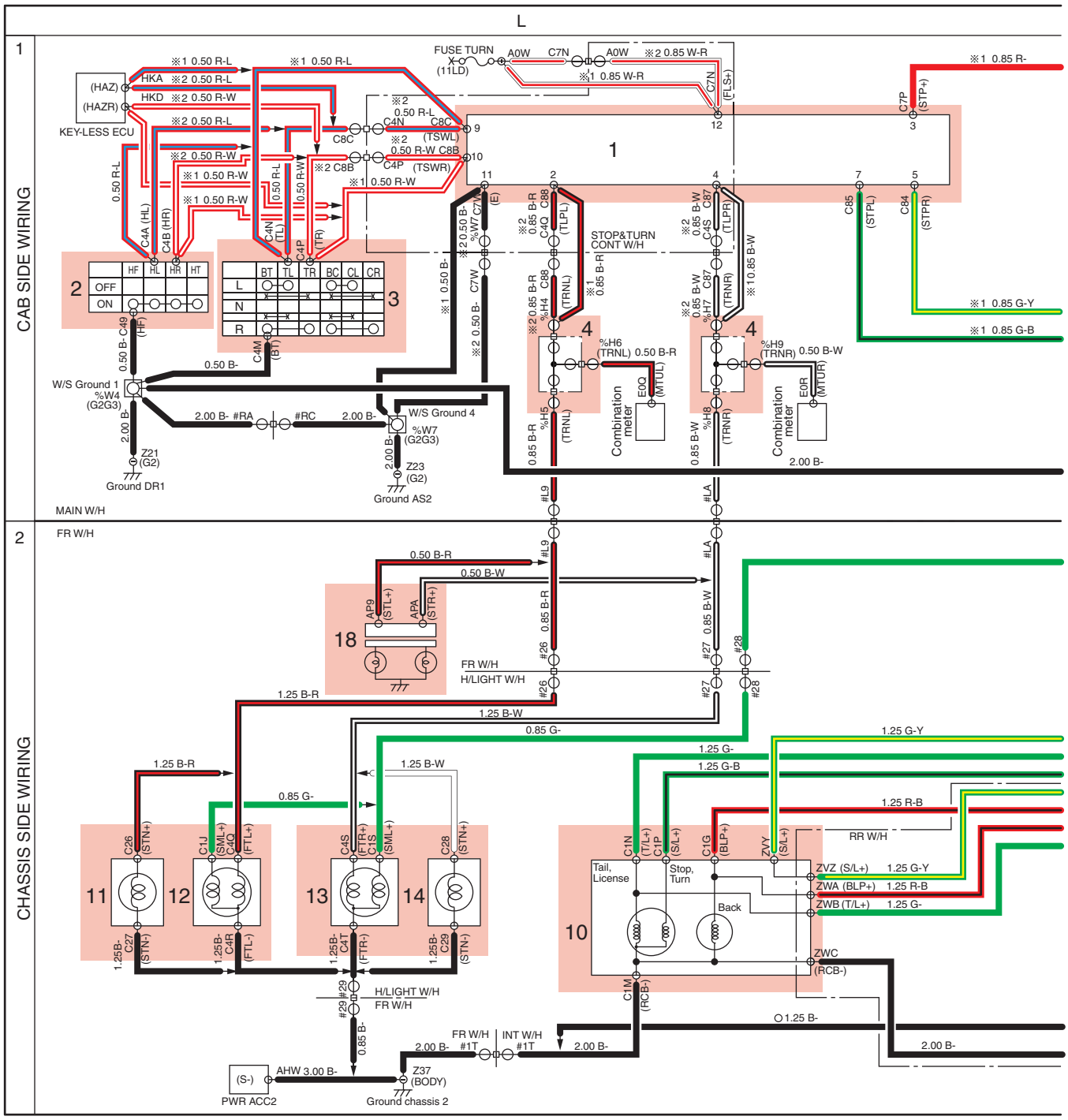


SAPH12Z080200059

**L STOP AND TURN LIGHT CIRCUIT**

1 Stop and turn controller
2 Wiper and retarder switch
3 Light and turn switch
4 Common rail J/C No. 2
5 J/C ground
6 Stop light relay
7 Common rail J/C No. 1
8 Stop light switch
9 STP TRANS diode
10 Rear combination light LH
11 Side turn light LH (For Fender)
12 Front turn light LH
13 Front turn light RH
14 Side turn light RH (For Fender)
15 Rear combination light RH
16 Back-up light switch
17 Back-up buzzer
18 Spare chassis (For Power supply)

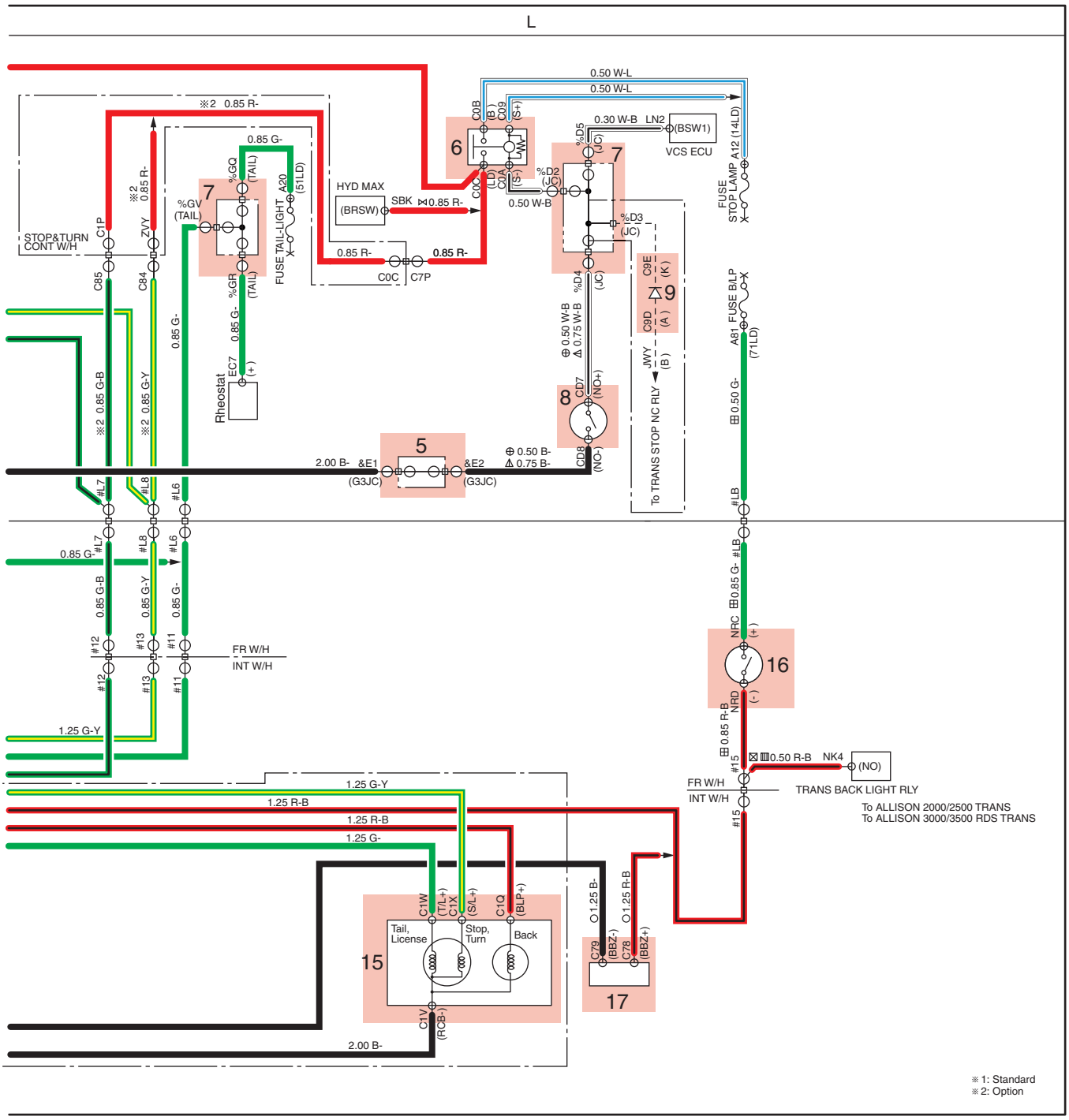


SAPH12Z080200060

L

1 CAB SIDE WIRING

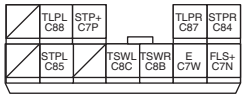


1

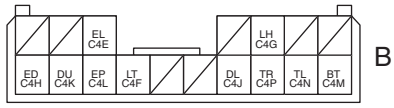


3

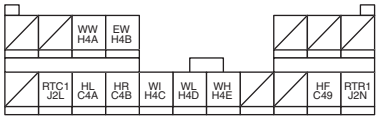


2

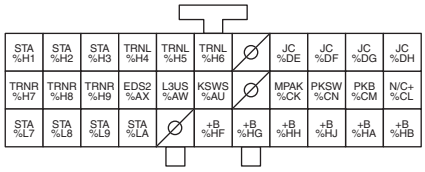


4

2 CHASSIS SIDE WIRING

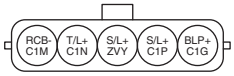


10-1

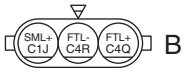


12

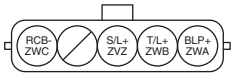


10-2




11

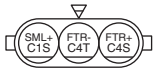


13

SAPH12Z080200061

L




5

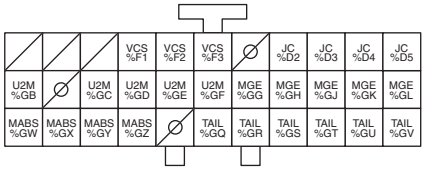


7

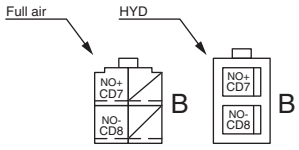


8-1 8-2

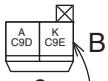


9




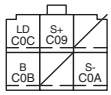


6




14

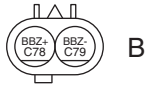


17




16

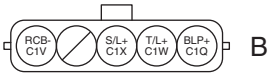


15

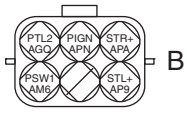


18

SAPH12Z080200062

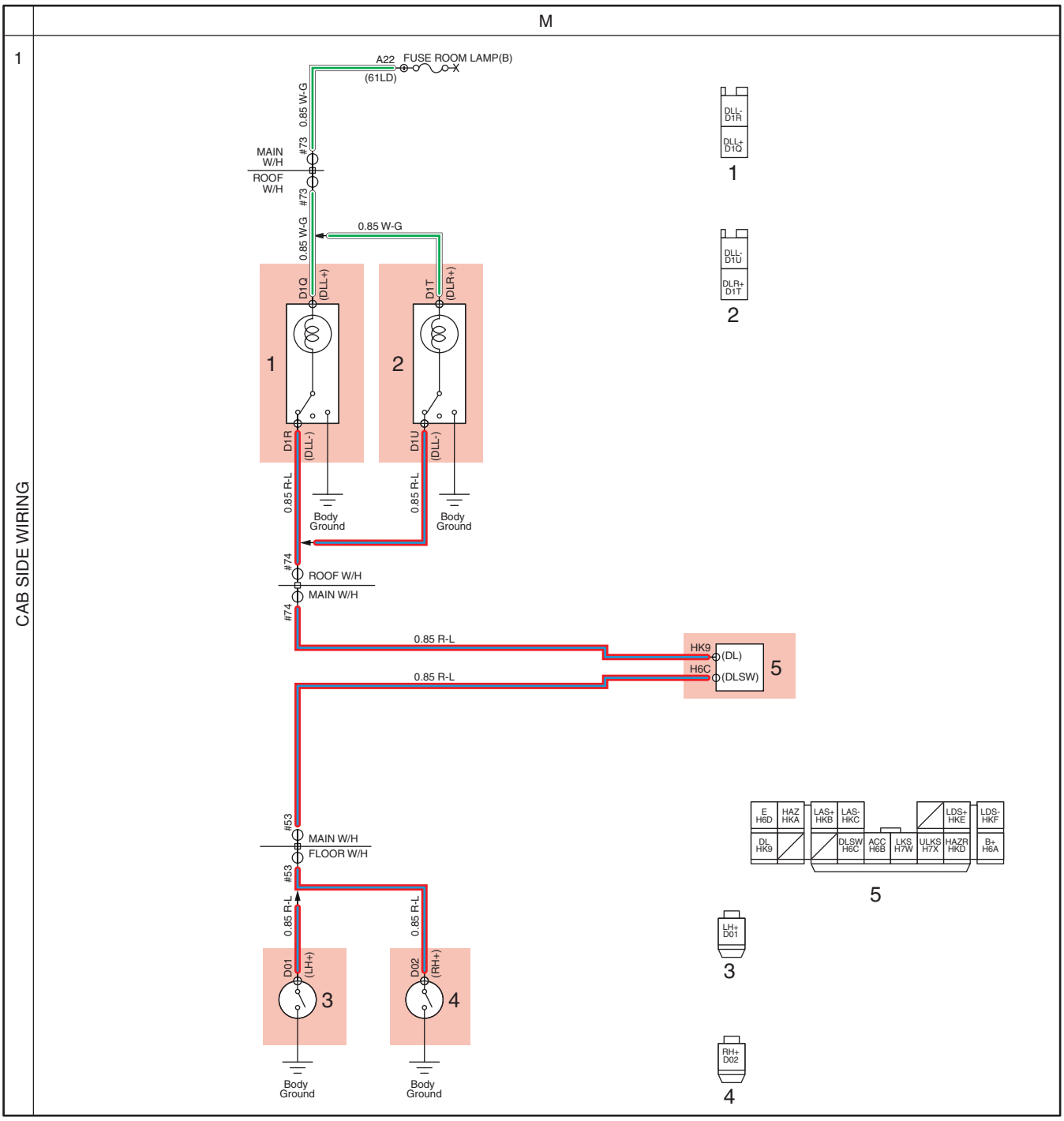


SAPH12Z080200063

**M ROOM LIGHT CIRCUIT**

**1 Dome light LH**

**2 Dome light RH**

**3 Courtesy switch front LH**

**4 Courtesy switch front RH**

**5 Key-less entry controller**

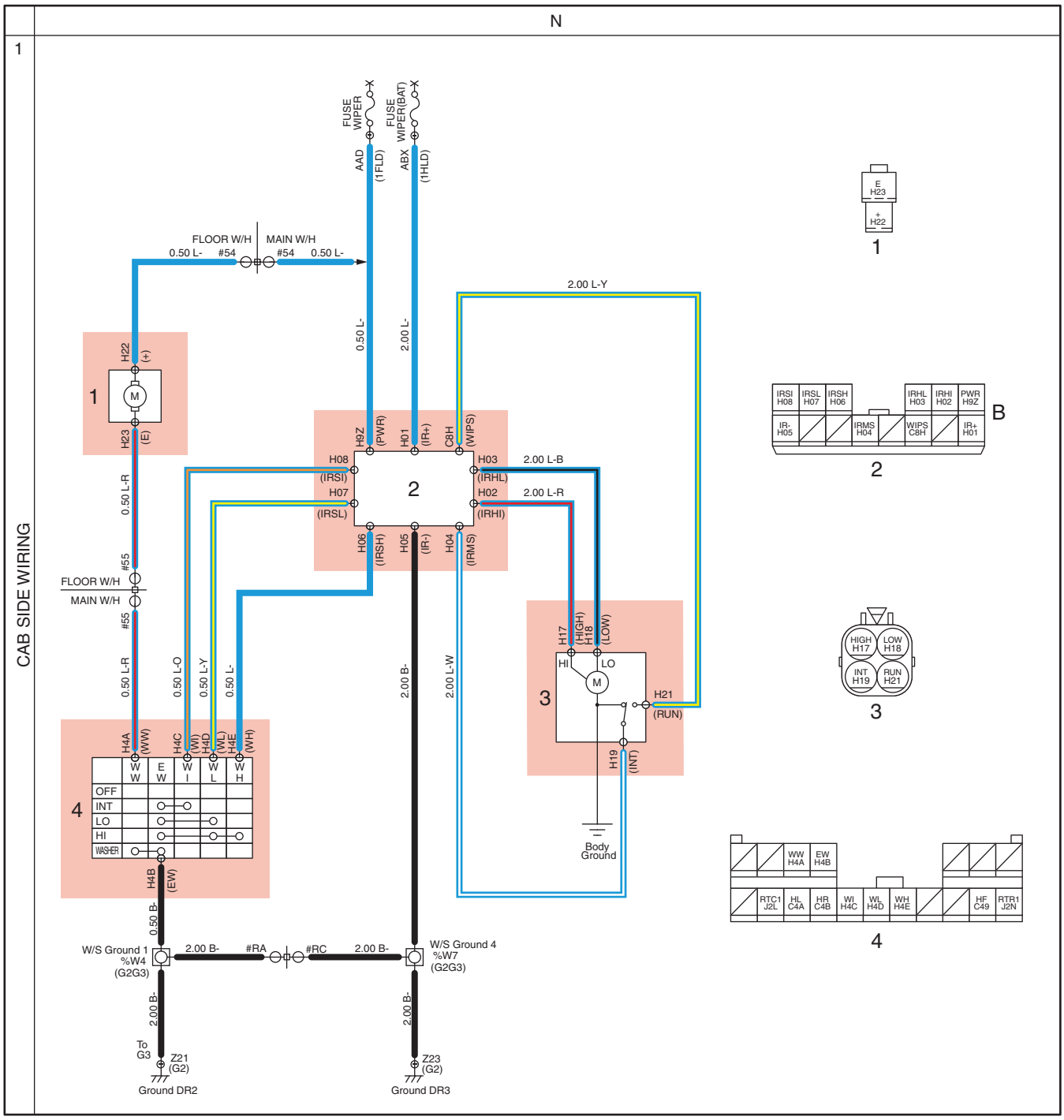


SAPH12Z080200064

**N WIPER AND WASHER CIRCUIT**

**1 Washer pump motor**

**2 Wiper relay**

**3 Wiper motor**

**4 Wiper and retarder switch**

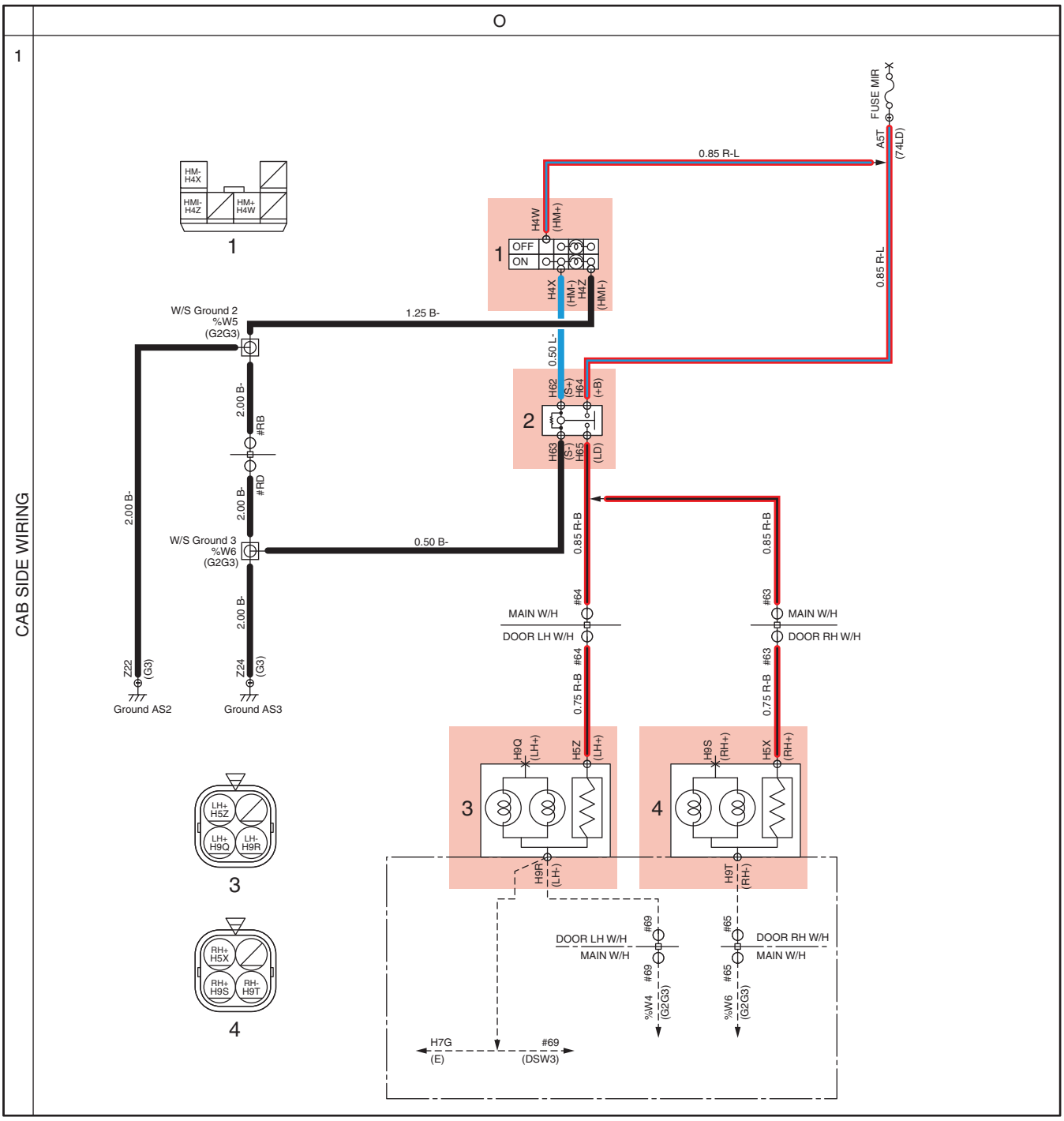


SAPH12Z080200065

**O MIRROR HEATER CIRCUIT**

**1 Mirror heater switch**

**2 Mirror heater relay**

**3 Heater and light mirror LH**

**4 Heater and light mirror RH**

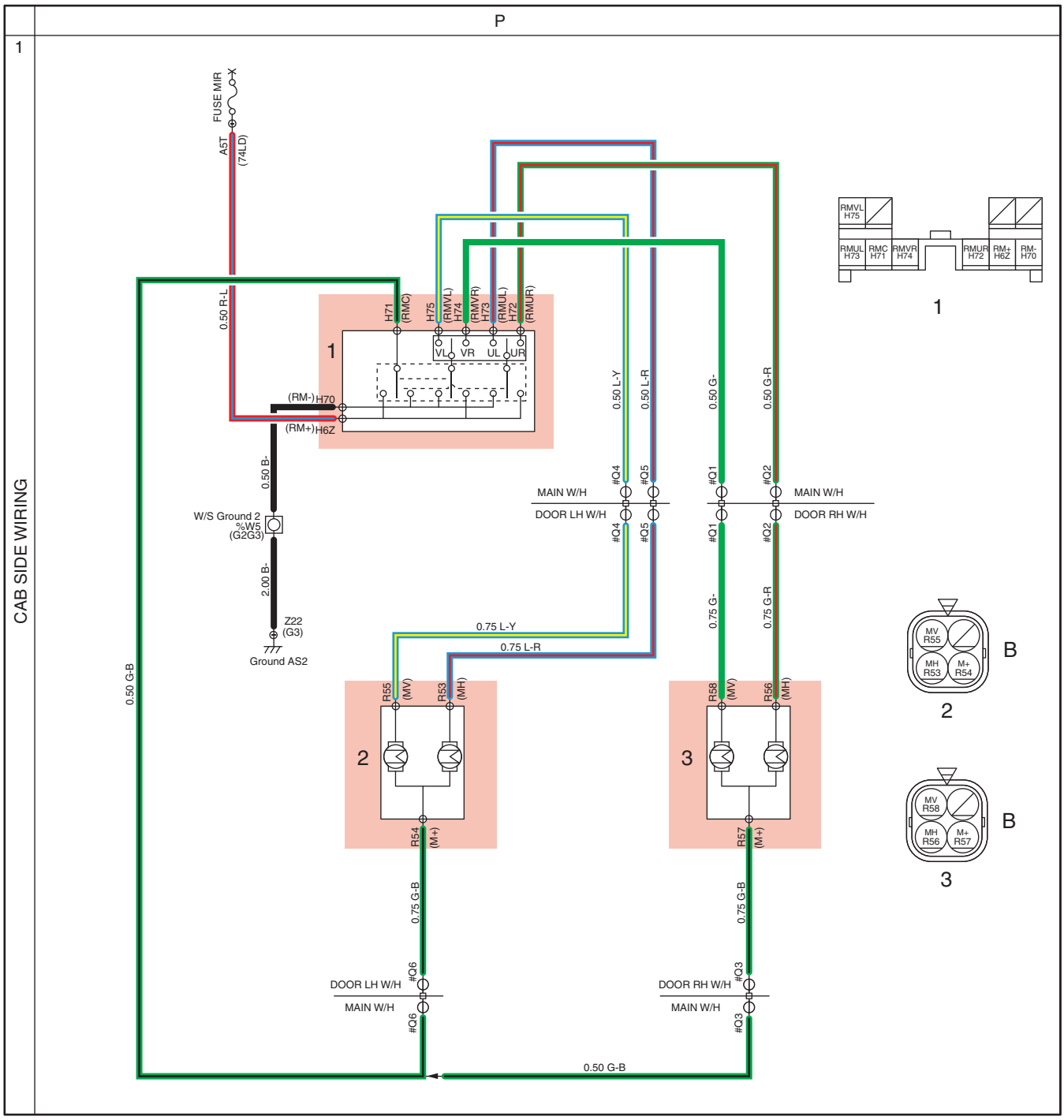


SAPH12Z080200066

**P REMOTE CONTROL MIRROR CIRCUIT**

**1 Remote control mirror switch**

**2 Remote control mirror LH**

**3 Remote control mirror RH**

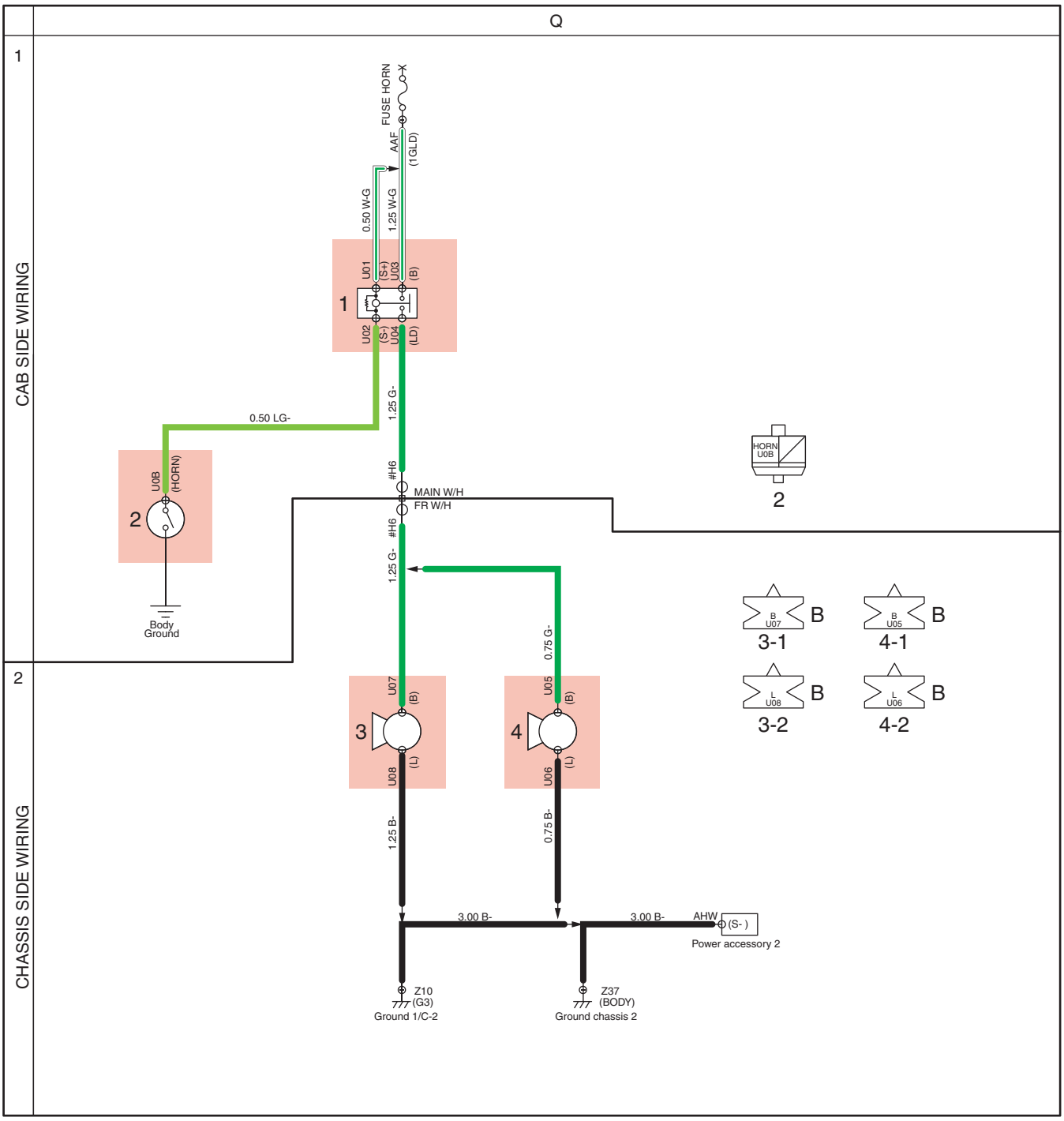


SAPH12Z080200067

**Q ELECTRIC HORN CIRCUIT**

**1 Horn relay**

**2 Horn switch**

**3 Horn (Low)**

**4 Horn (High)**

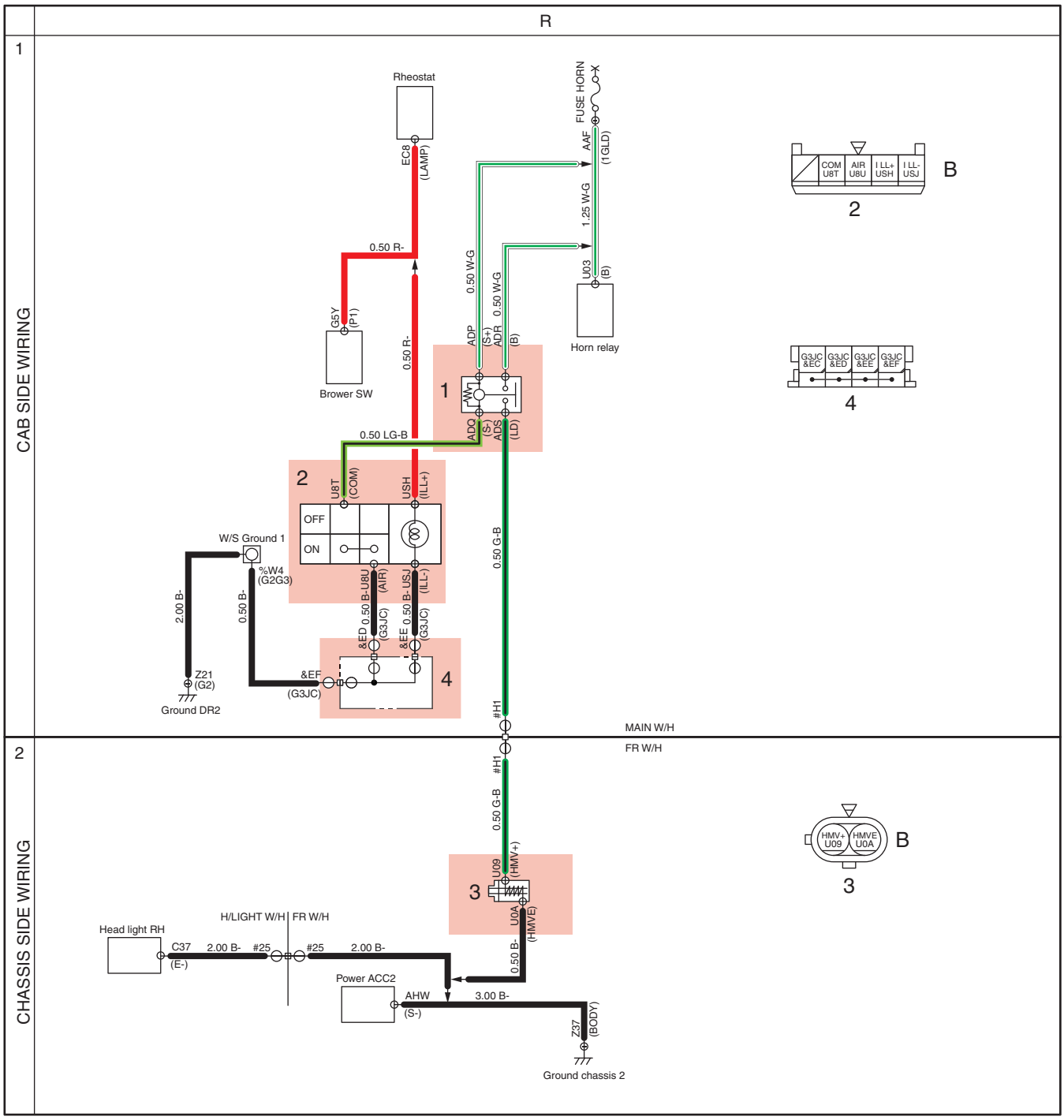


SAPH12Z080200068

**R AIR HORN CIRCUIT**

**1 Air horn relay**

**2 Air horn switch**

**3 Air horn magnetic valve**

**4 J/C ground 4P**

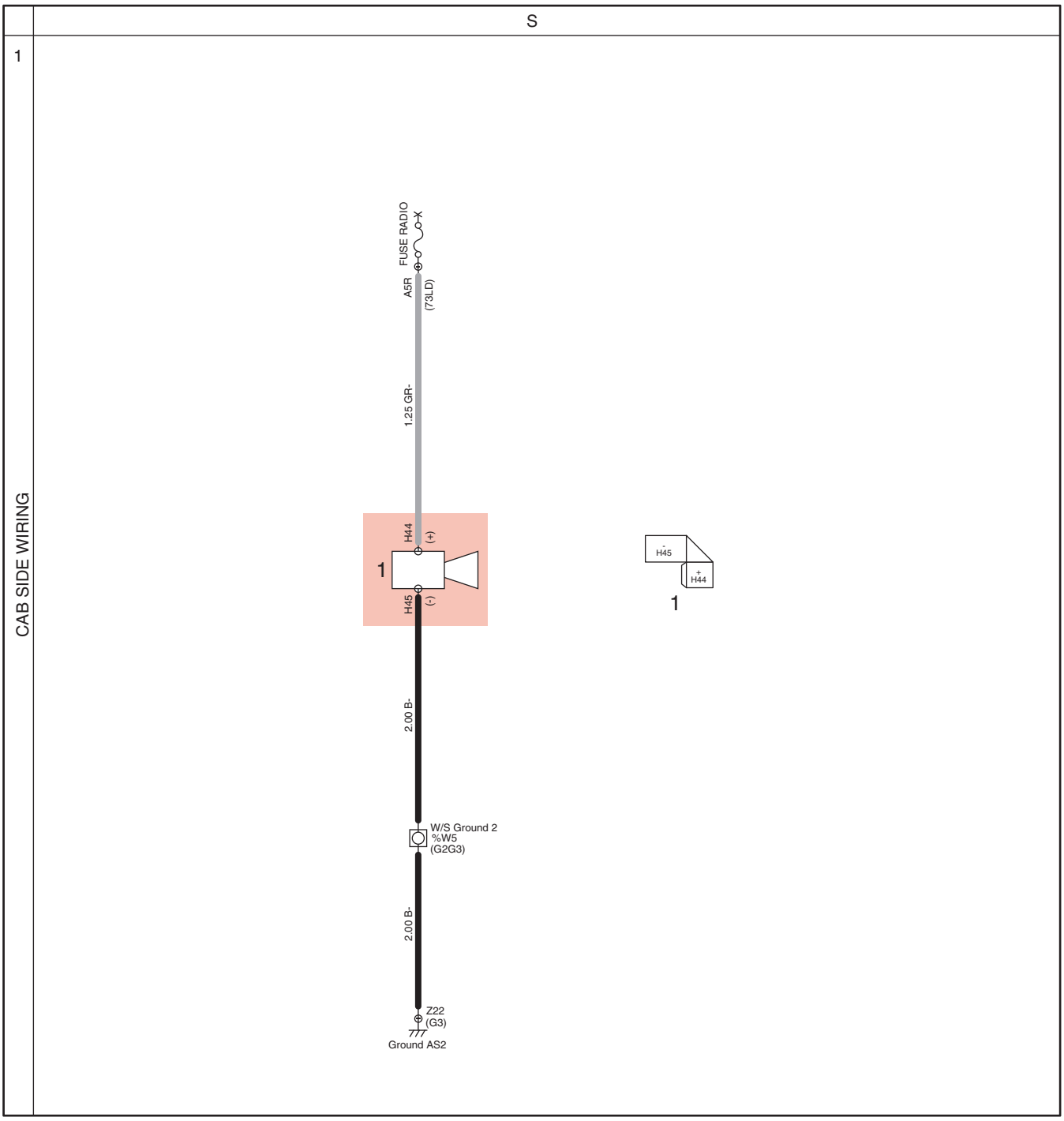


SAPH12Z080200069

**S CIGARETTE LIGHTER CIRCUIT OR ACCESSORY SOCKET CIRCUIT**

**1 Cigarette lighter or Accessory Socket**

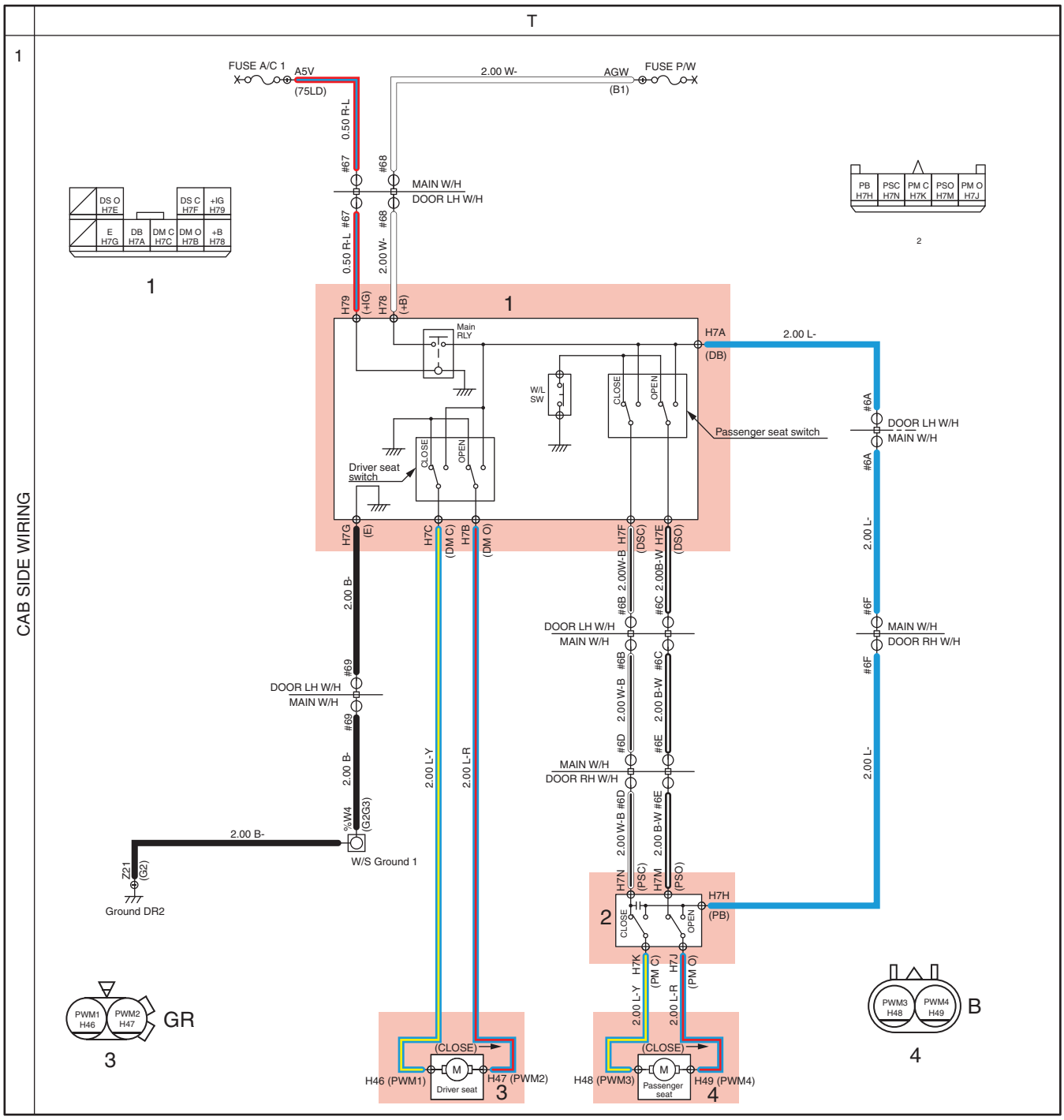


SAPH12Z080200070

**T POWER WINDOW CIRCUIT**

**1 Driver seat master switch**

**2 Passenger seat sub switch**

**3 Power window motor (For Driver seat side)**

**4 Power window motor (For Passenger side)**

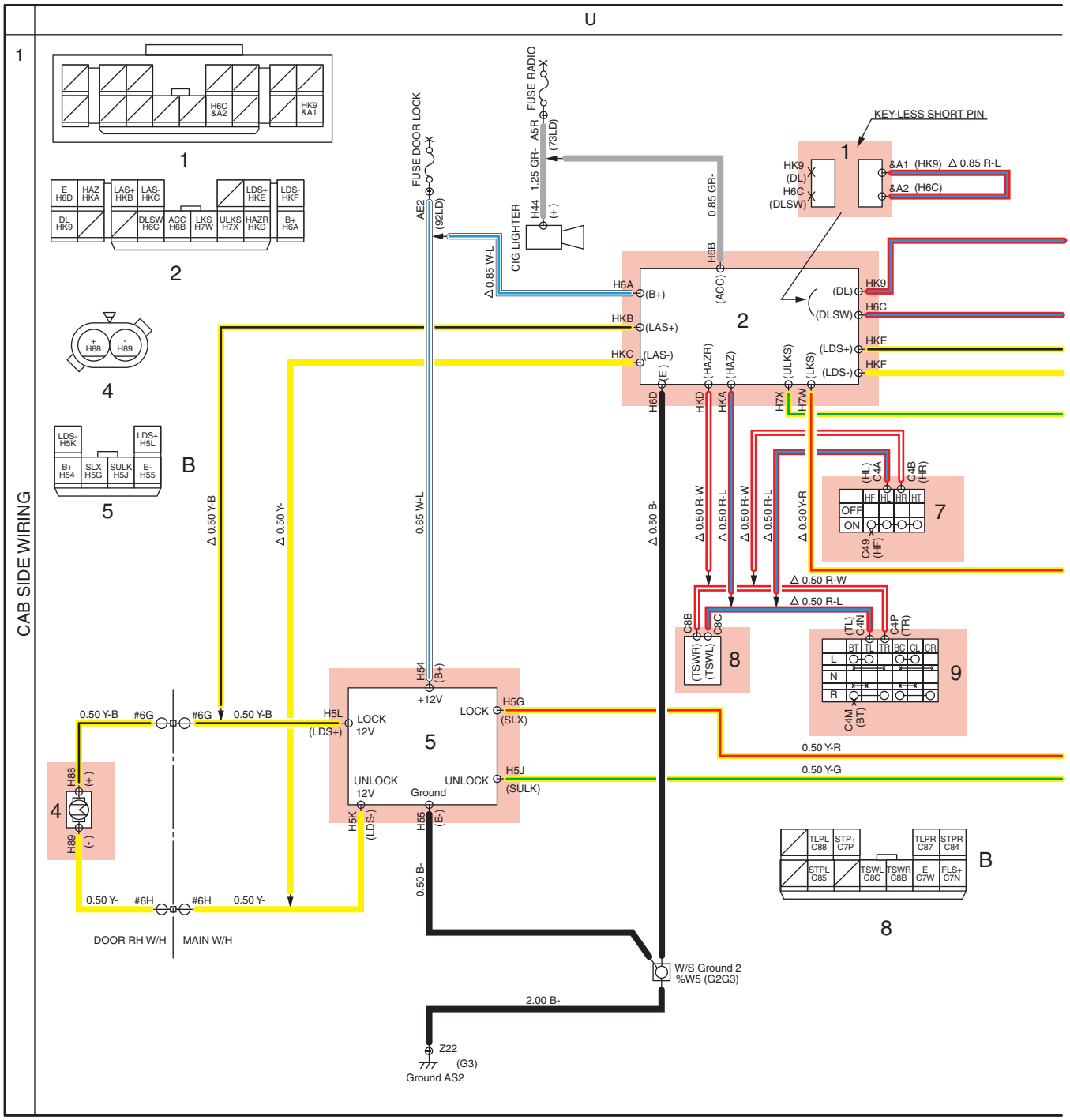


SAPH12Z080200071

**U POWER DOOR LOCK AND KEY-LESS ENTRY CIRCUIT**

**1 Key-less entry short circuit connector**

**2 Key-less entry controller**

**3 Power door lock motor (For Driver side)**

**4 Power door lock motor (For Passenger side)**

**5 Power door lock controller**

**6 Power door lock switch (For Driver side)**

**7 Wiper and retarder switch**

**8 Stop and turn controller**

**9 Light and turn switch**

U

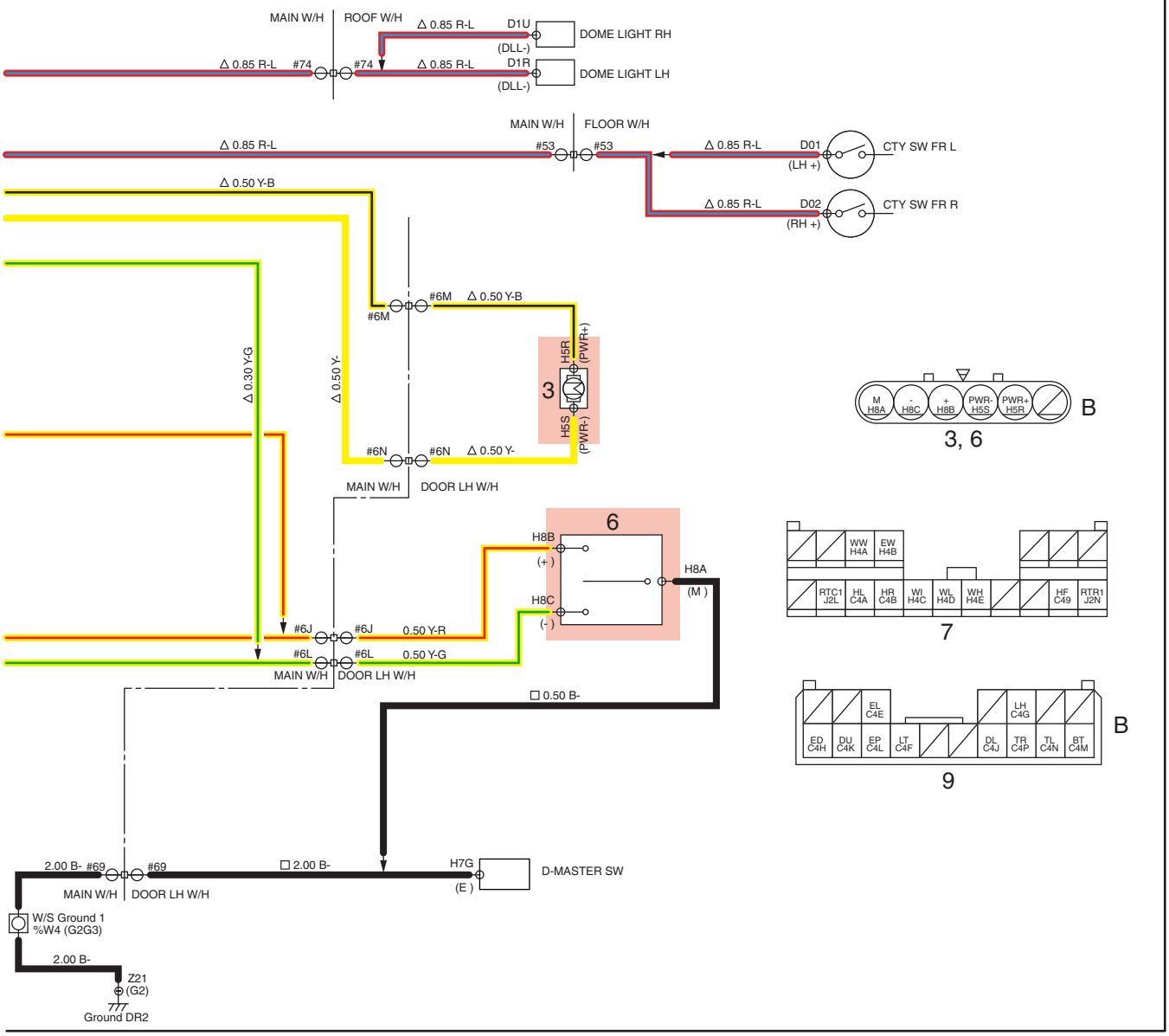


SAPH12Z080200072

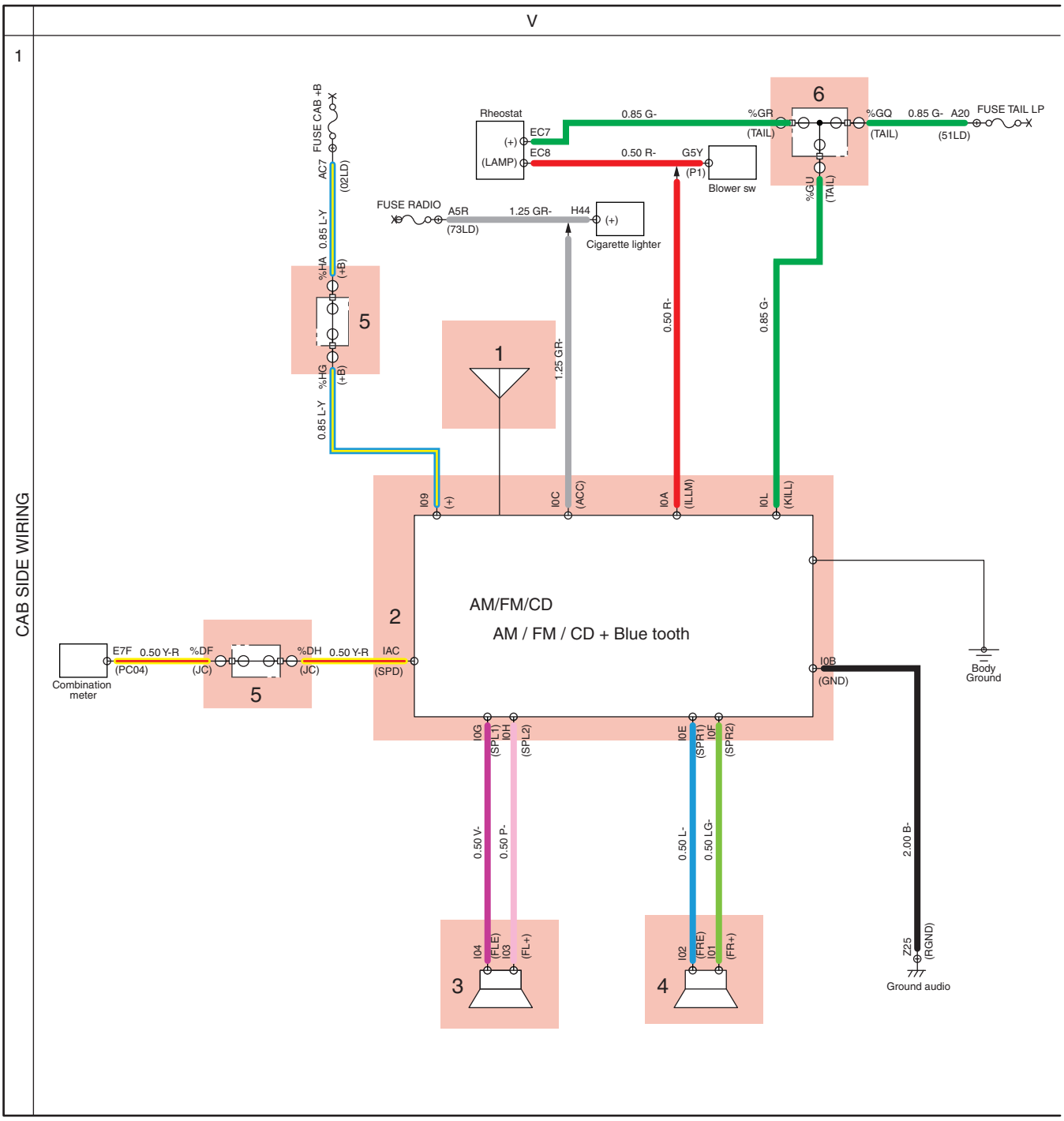


SAPH12Z080200073

**V AUDIO CIRCUIT**
**1 Antenna**
**2 Radio/Audio unit**
**3 Front speaker LH**
**4 Front speaker RH**
**5 Common rail J/C No.2**
**6 Common rail J/C No.1**

V

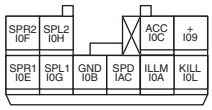


2

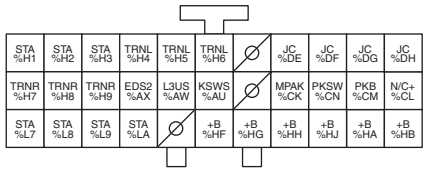


5

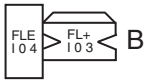


3

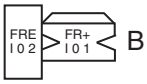


4

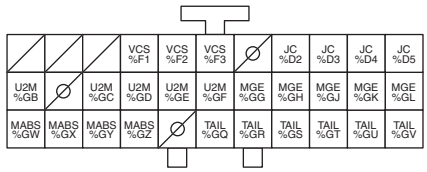


6

SAPH12Z080200074

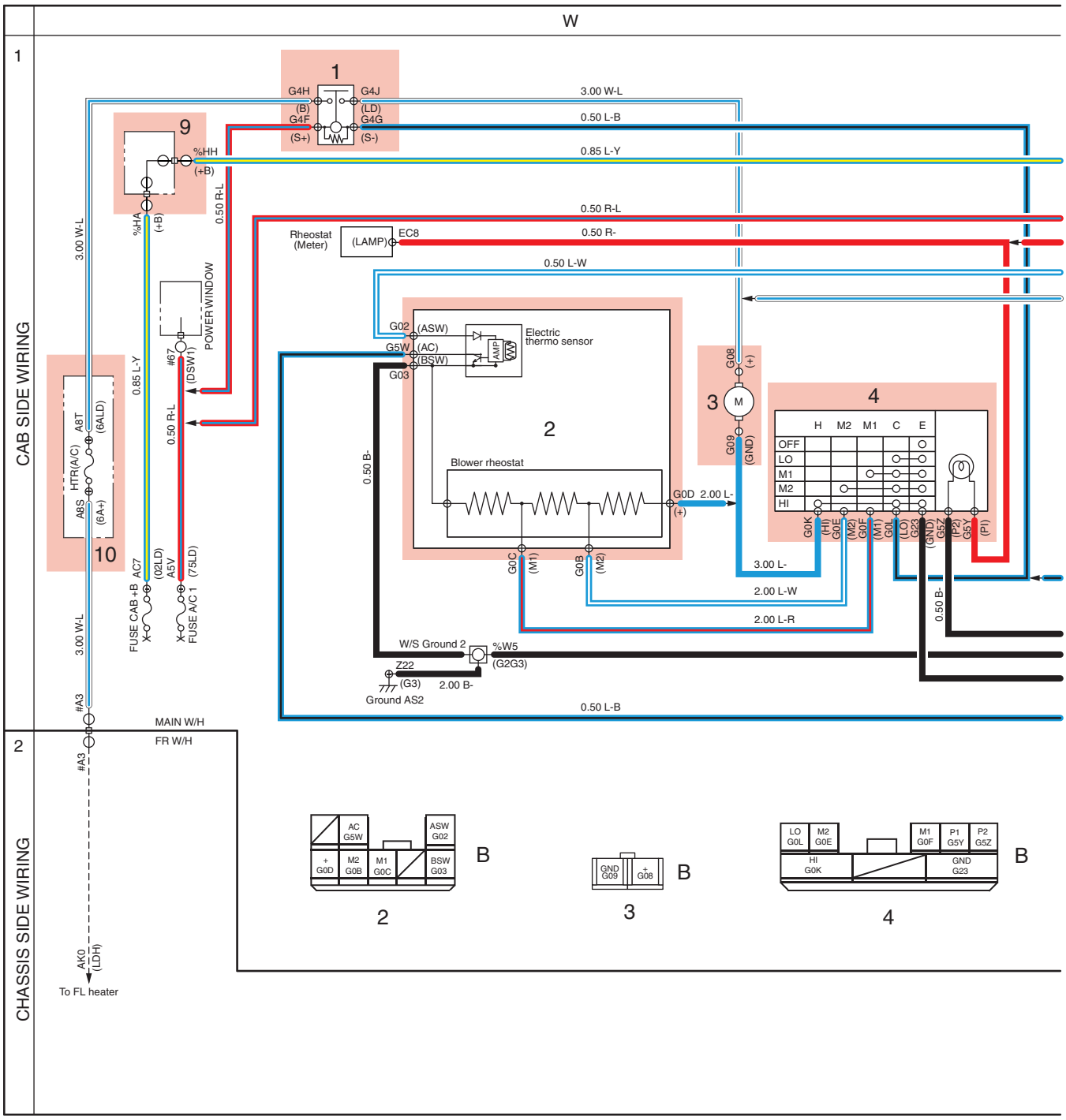


SAPH12Z080200075

**W MANUAL AIR CONDITIONER CIRCUIT**

| | | | |
|---|---|---|---|
| **1** | **Heater relay** | **6** | **Air conditioner relay** |
| **2** | **Heater and cooler unit** | **7** | **Pressure switch** |
| **3** | **Blower motor** | **8** | **Compressor** |
| **4** | **Blower switch** | **9** | **Common rail J/C No.2** |
| **5** | **Air conditioner switch** | **10** | **Fuse and relay block B** |

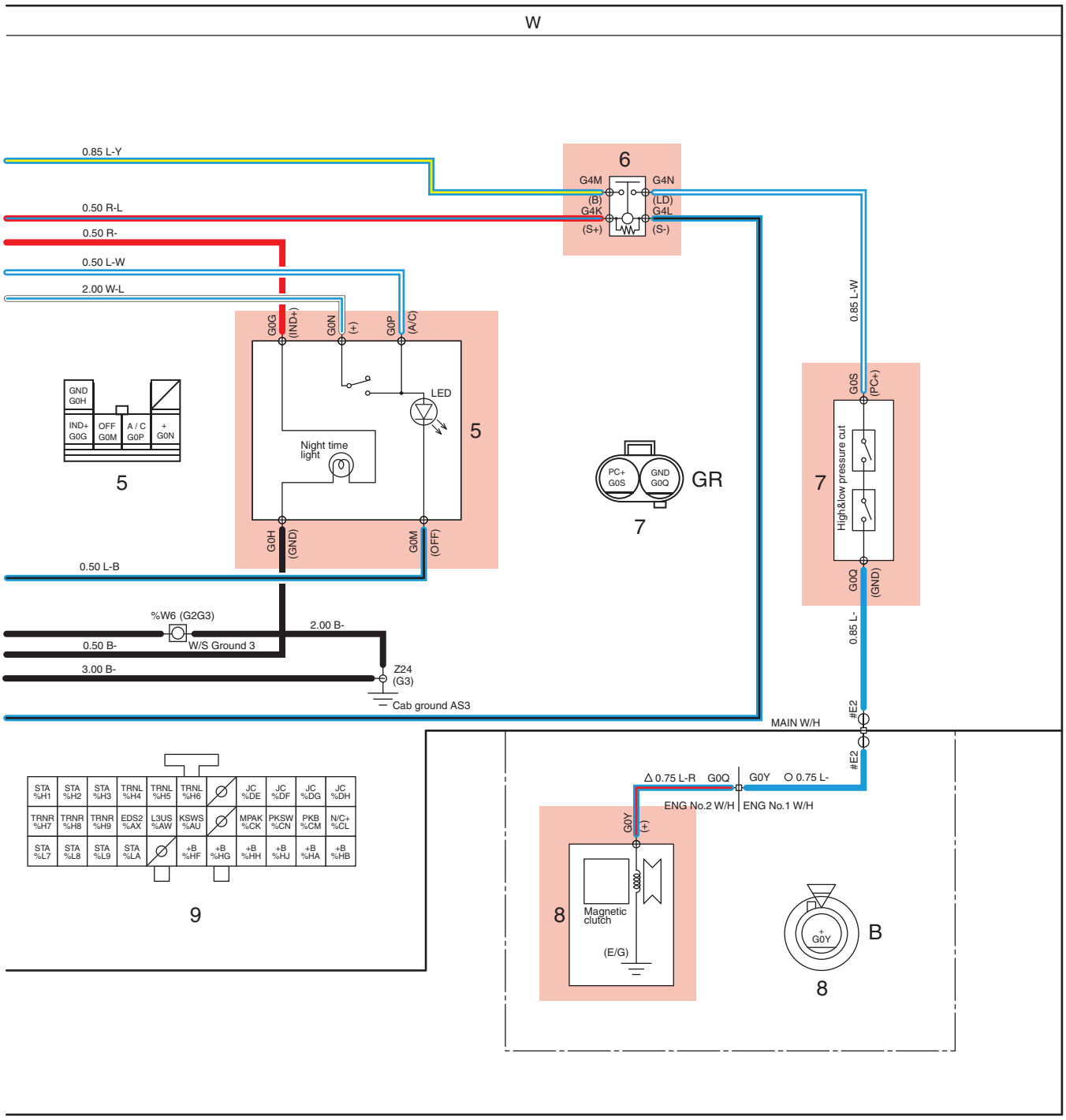


SAPH12Z080200076

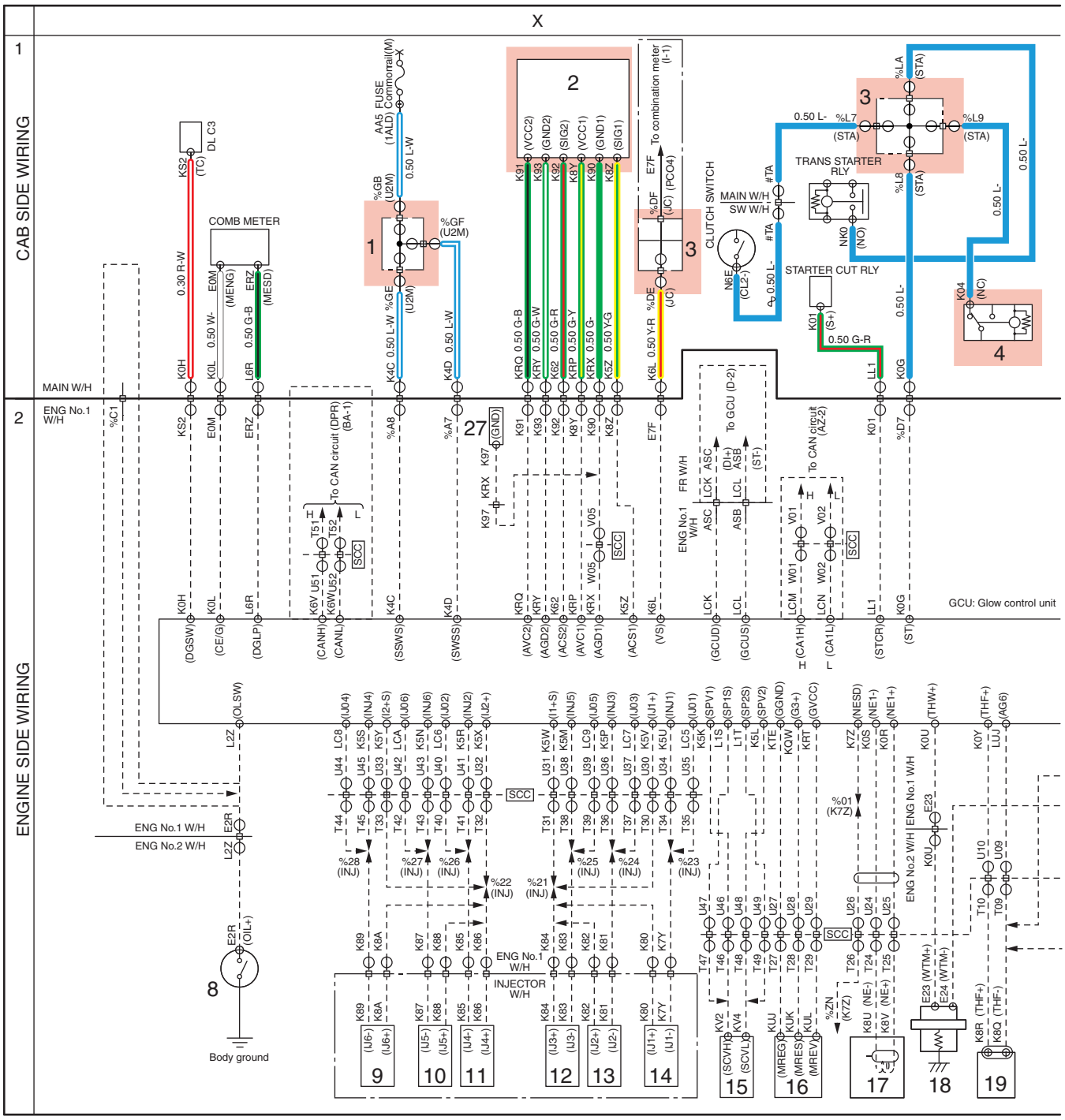


SAPH12Z080200077

**X COMMON RAIL CIRCUIT-1 (CAB SIDE)**

1 Common rail J/C No.1
2 Accelerator sensor
3 Common rail J/C No.2
4 Starter cut relay
5 Common rail actuator power relay
6 Engine ECU main relay
7 Engine ECU
8 Oil pressure switch
9 Injector 6
10 Injector 5
11 Injector 4
12 Injector 3
13 Injector 2
14 Injector 1
15 Suction control valve
16 Engine speed sub sensor
17 Engine speed main sensor
18 Engine coolant temperature sensor 1

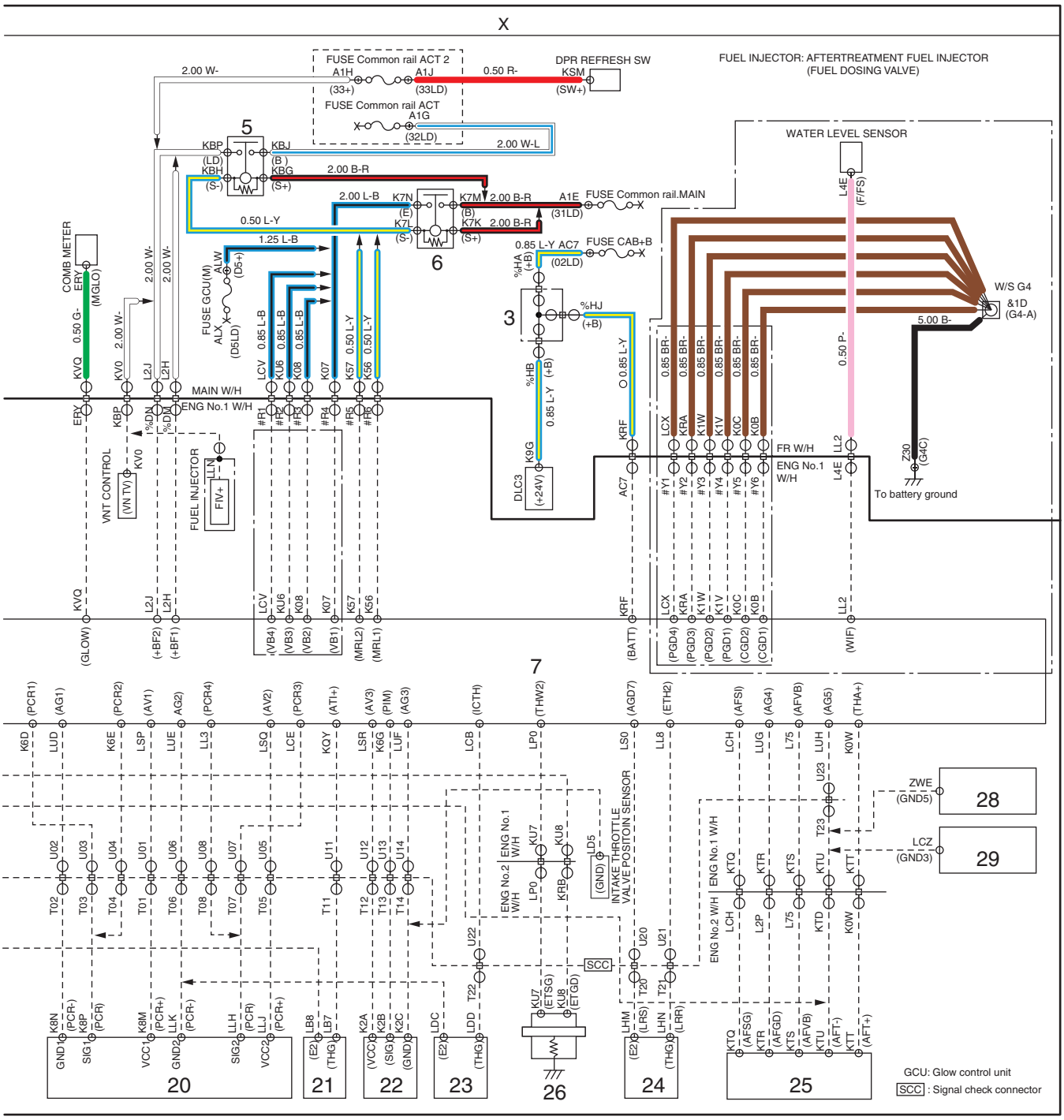


SAPH12Z080200078

**19** Fuel temperature sensor

**20** Common rail pressure sensor

**21** Intake manifold temperature sensor (intake manifold)

**22** Boost pressure sensor

**23** Intake air temperature sensor (intercooler outlet)

**24** EGR gas temperature sensor

**25** Air flow sensor

**26** Engine coolant temperature sensor 2

**27** PTO accelerator sensor

**28** Exhaust gas temperature sensor 1 (ATC upstream)

**29** Exhaust gas temperature sensor 2 (ATC downstream)

X

1

CAB SIDE WIRING

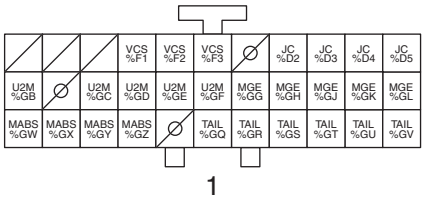


2

ENGINE SIDE WIRING

SAPH12Z080200079

X

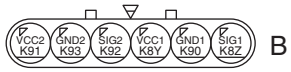


2

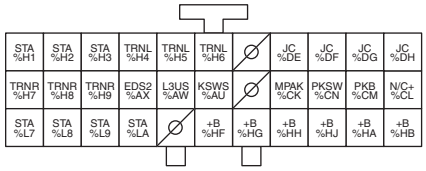


3

SAPH12Z080200080

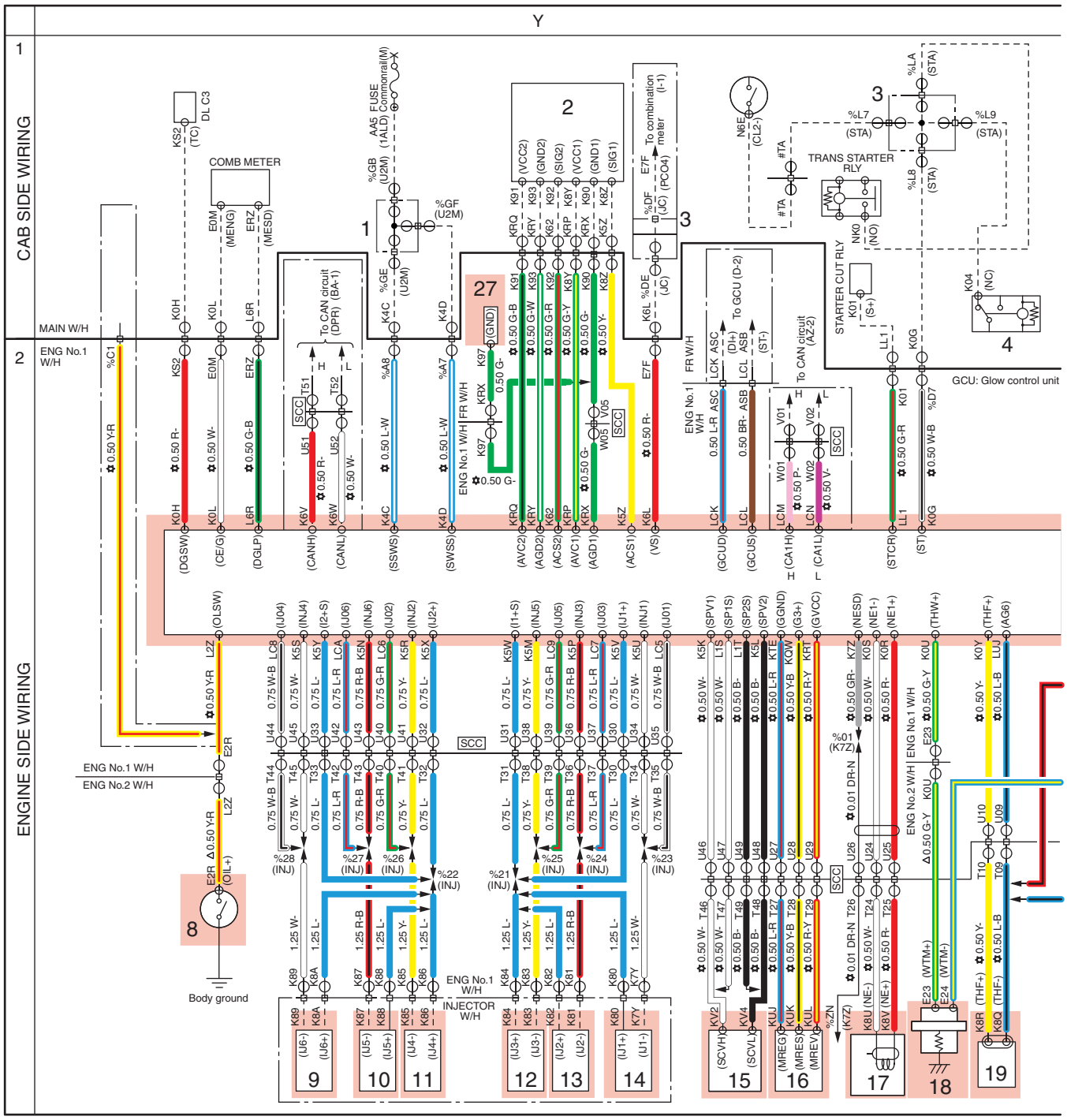


SAPH12Z080200081

**Y COMMON RAIL CIRCUIT-1 (CHASSIS SIDE)**

1 Common rail J/C No.1
2 Accelerator sensor
3 Common rail J/C No.2
4 Starter cut relay
5 Common rail actuator power relay
6 Engine ECU main relay
7 Engine ECU
8 Oil pressure switch
9 Injector 6
10 Injector 5
11 Injector 4
12 Injector 3
13 Injector 2
14 Injector 1
15 Suction control valve
16 Engine speed sub sensor
17 Engine speed main sensor
18 Engine coolant temperature sensor 1

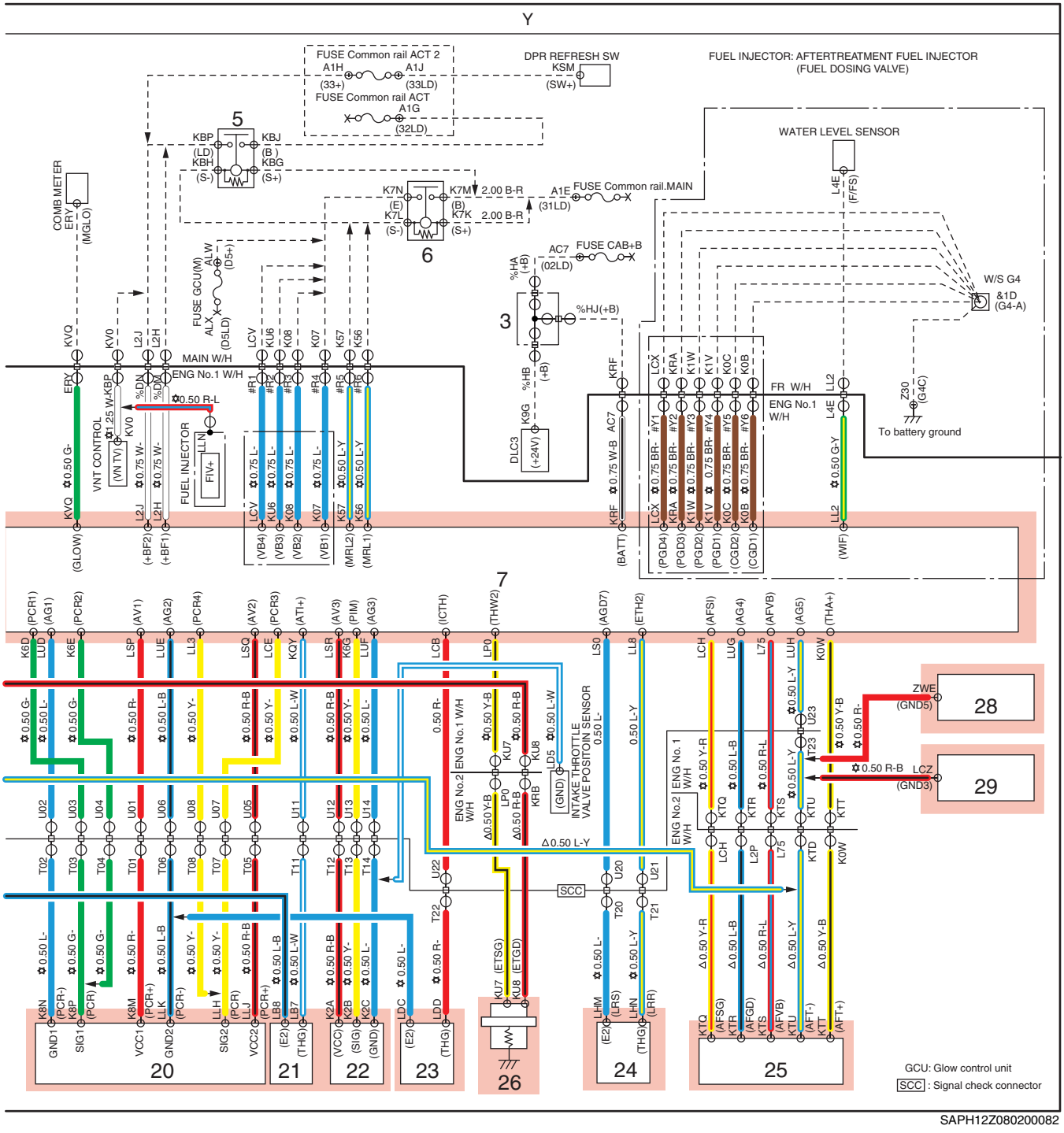


SAPH12Z080200082

**19** **Fuel temperature sensor**

**20** **Common rail pressure sensor**

**21** **Intake manifold temperature sensor (intake manifold)**

**22** **Boost pressure sensor**

**23** **Intake air temperature sensor (intercooler outlet)**

**24** **EGR gas temperature sensor**

**25** **Air flow sensor**

**26** **Engine coolant temperature sensor 2**

**27** **PTO accelerator sensor**

**28** **Exhaust gas temperature sensor 1 (ATC upstream)**

**29** **Exhaust gas temperature sensor 2 (ATC downstream)**

| | Y |
|---|---|
| 1 CAB SIDE WIRING | |
| 2 ENGINE SIDE WIRING | Connected surface color:L<br>Connected surface color:GR<br>Connected surface color:L |

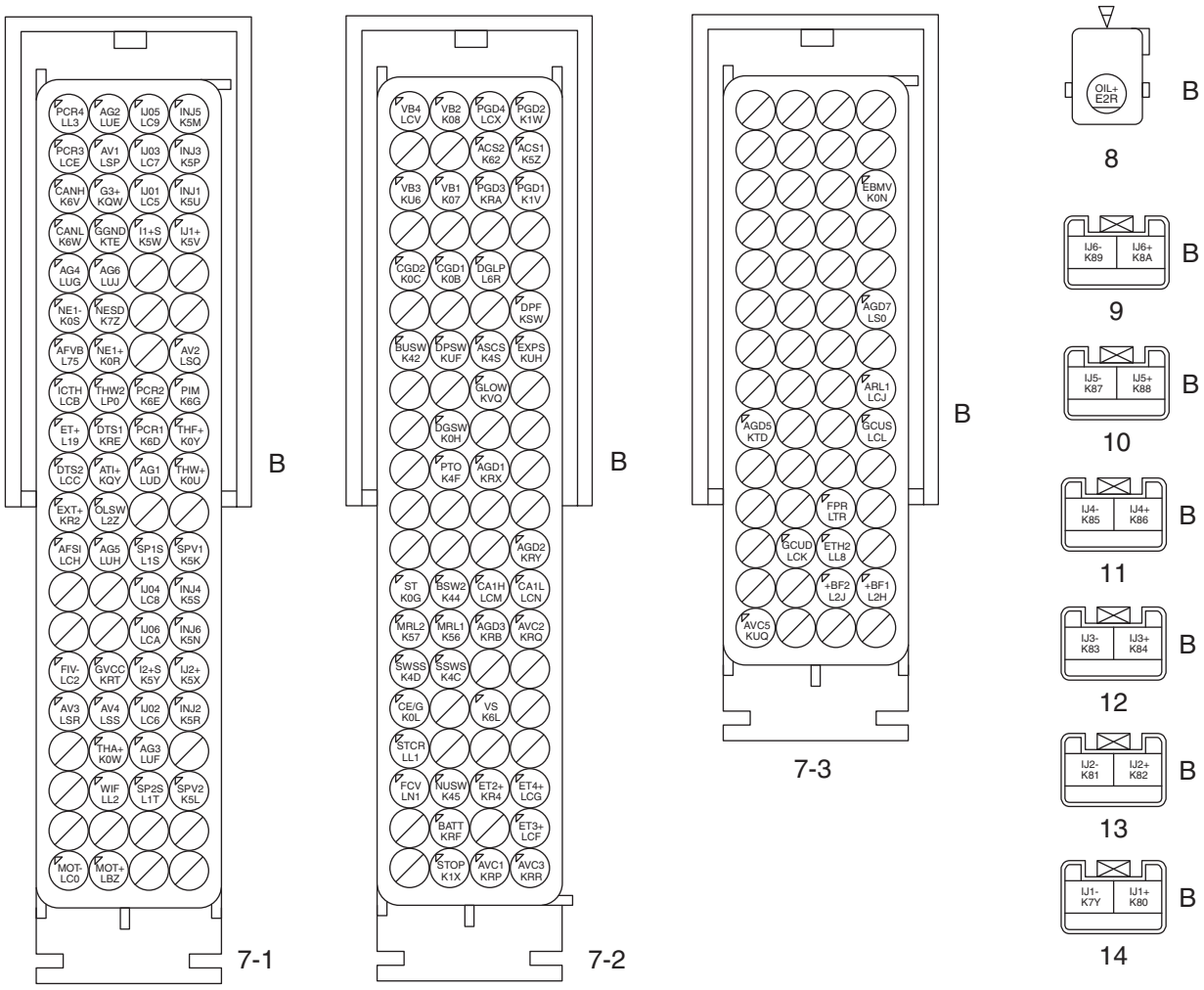


SAPH12Z080200083

Y

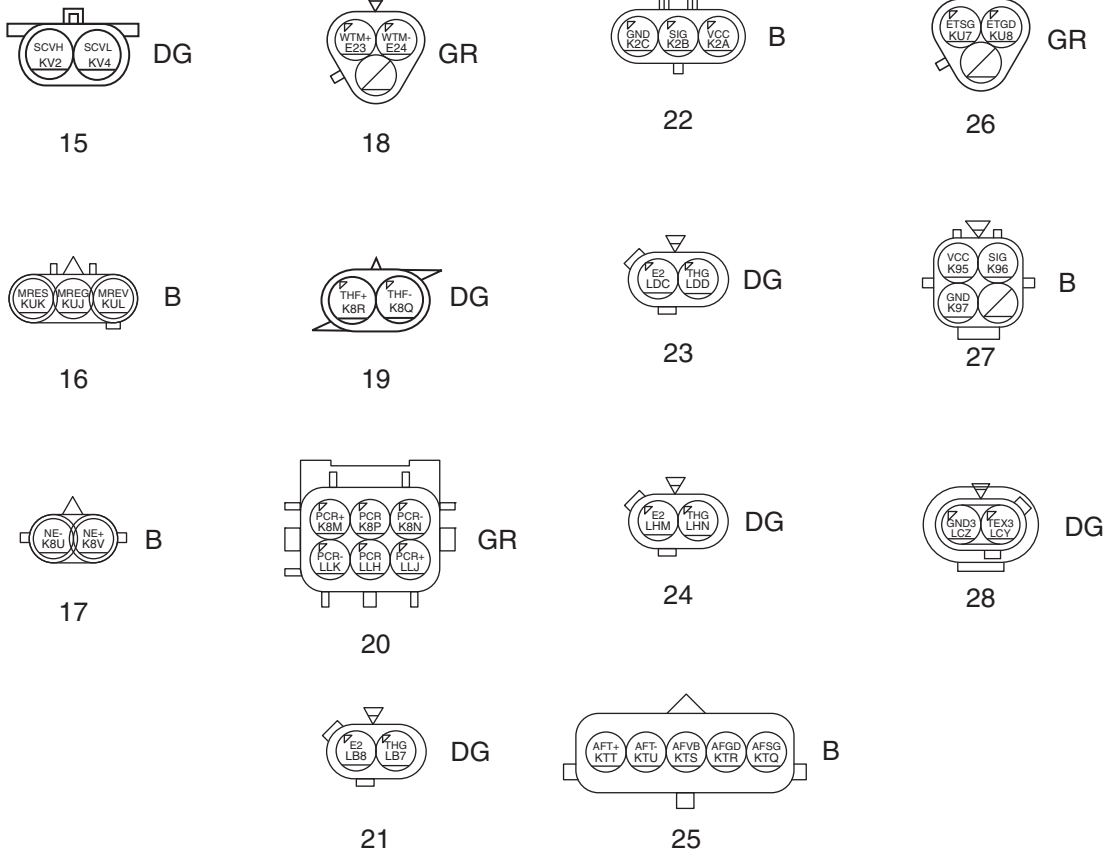


SAPH12Z080200084

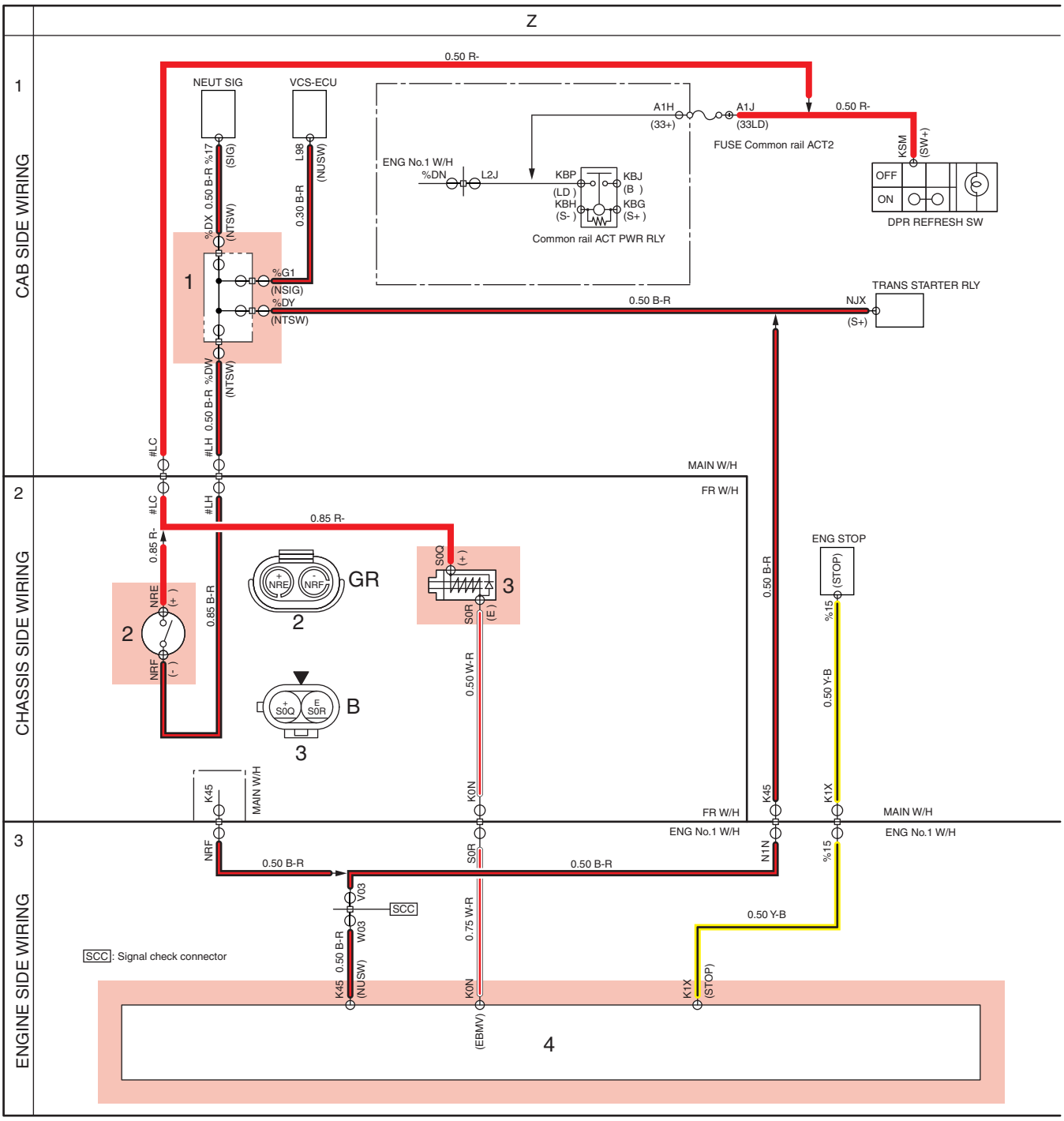


SAPH12Z080200085

**Z COMMON RAIL CIRCUIT-2: MANUAL TRANSMISSION AND EXHAUST BRAKE**

**1 J/C signal**

**2 Neutral switch**

**3 Exhaust brake solenoid valve**

**4 Engine ECU**

Z

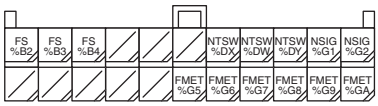


1

Connected surface color:L

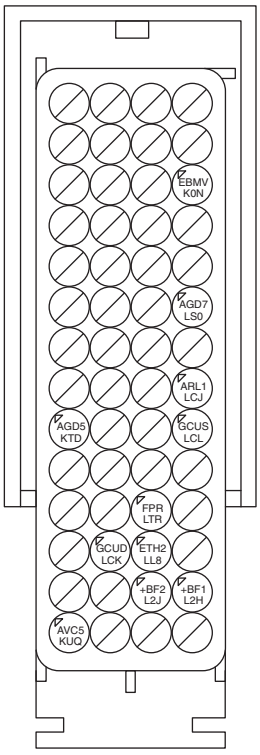


B

4-2

Connected surface color:GR

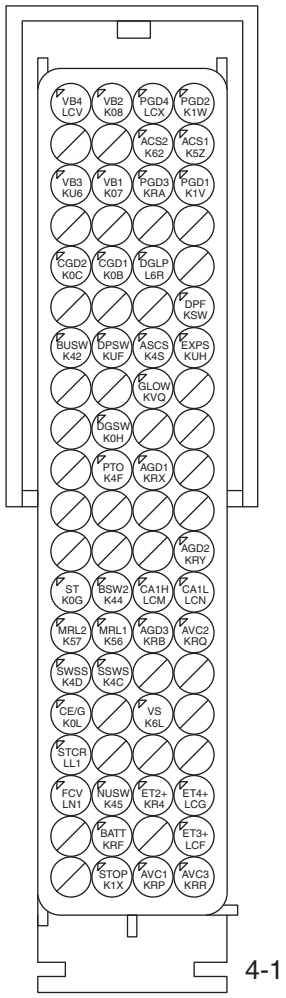


B

4-1

SAPH12Z080200086

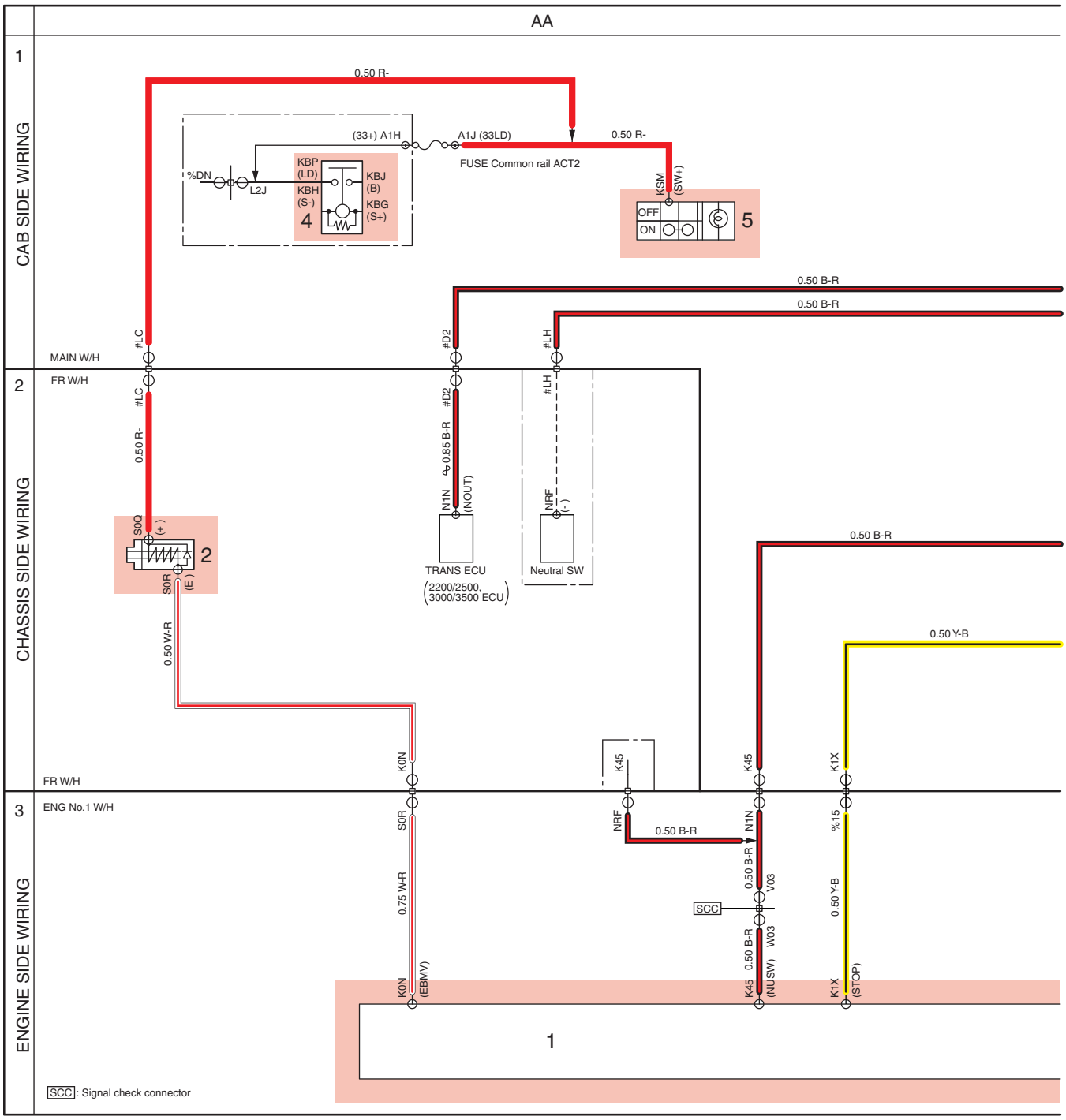


SAPH12Z080200087

**AA COMMON RAIL CIRCUIT-3: AUTOMATIC TRANSMISSION AND EXHAUST BRAKE**

**1 Engine ECU**

**2 Exhaust brake solenoid valve**

**3 J/C signal**

**4 Common rail actuator power relay**

**5 DPR manual regeneration switch**

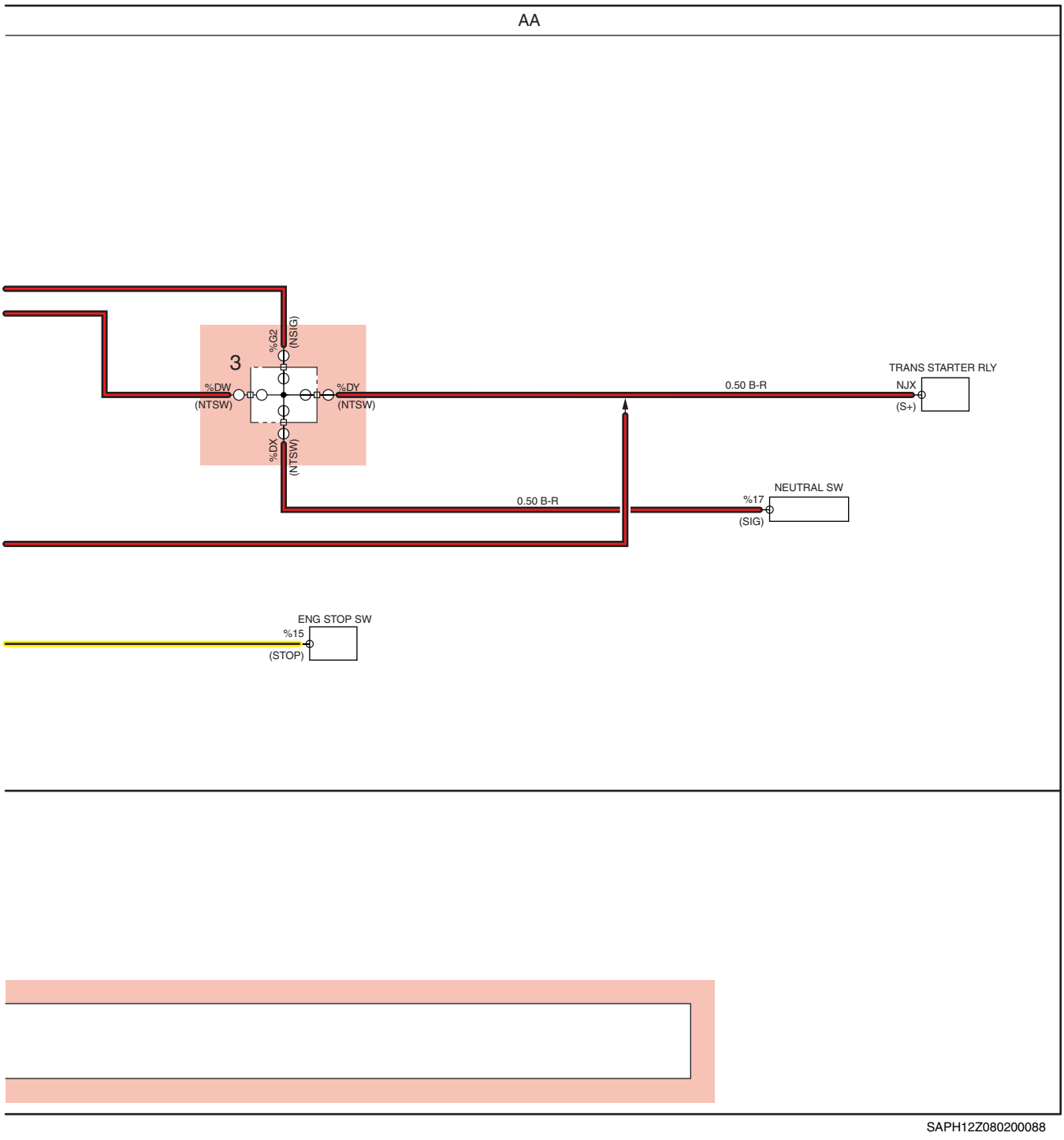


SAPH12Z080200088

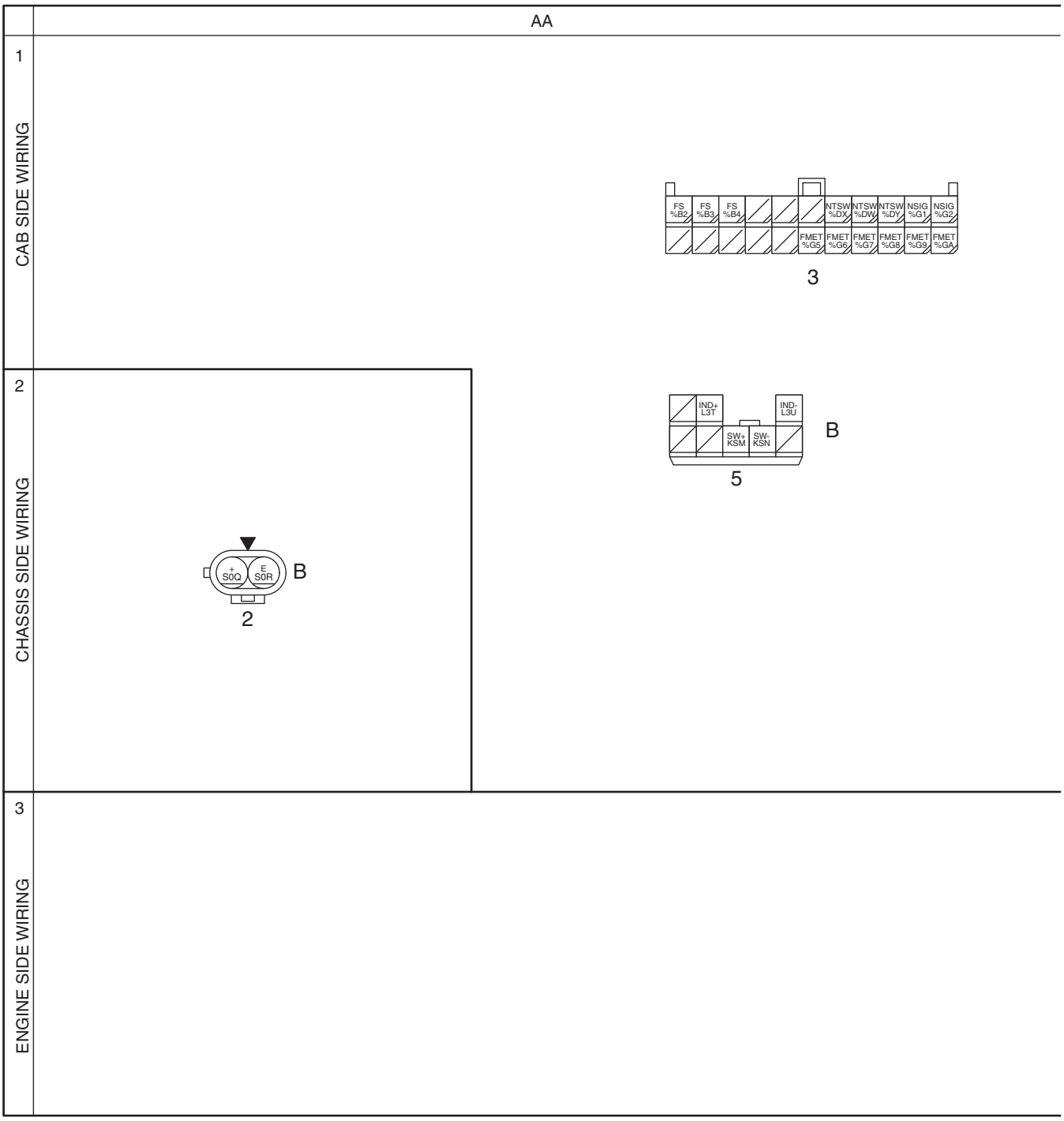


SAPH12Z080200089

AA

Connected surface color:GR

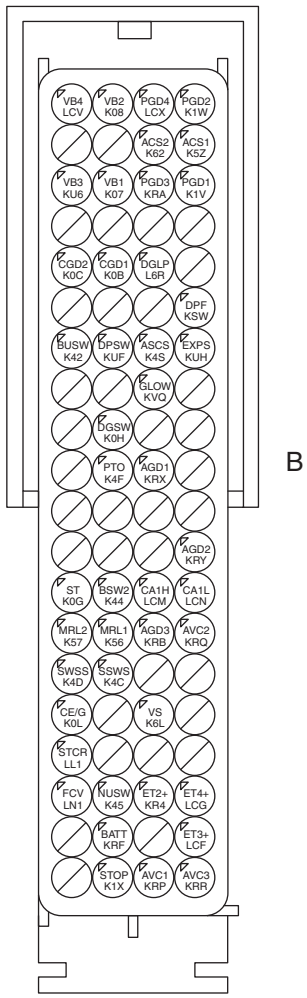


1-1

Connected surface color:L

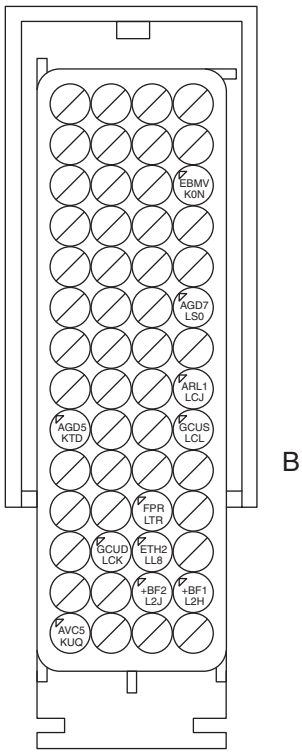


1-2

SAPH12Z080200090

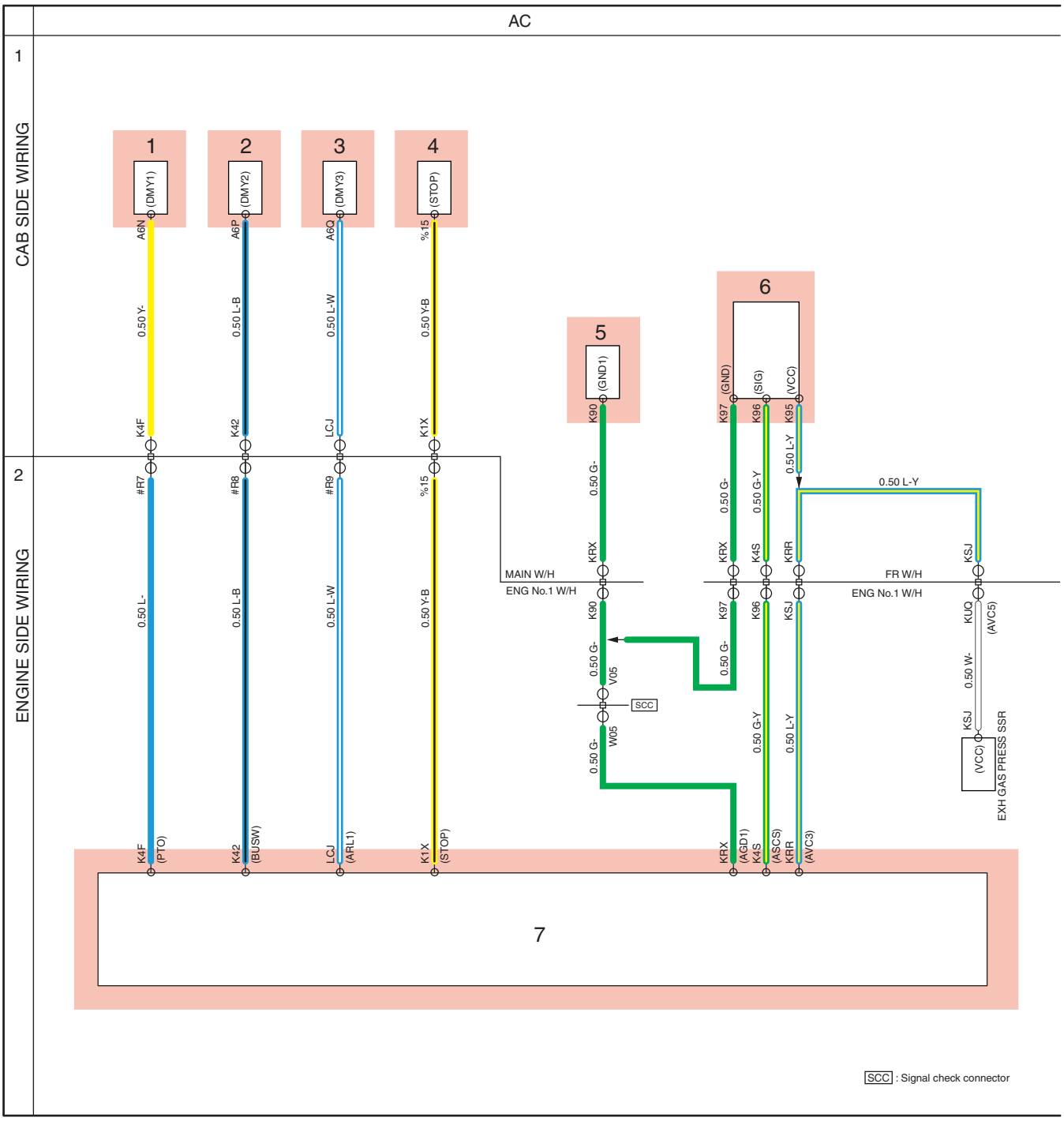


SAPH12Z080200091

**AC COMMON RAIL CIRCUIT-5: MODELS EQUIPPED WITH PTO**

**1 PTO switch 1**

**2 PTO switch 2**

**3 PTO cut relay**

**4 Engine stop switch**

**5 Accelerator sensor**

**6 PTO accelerator sensor**

**7 Engine ECU**

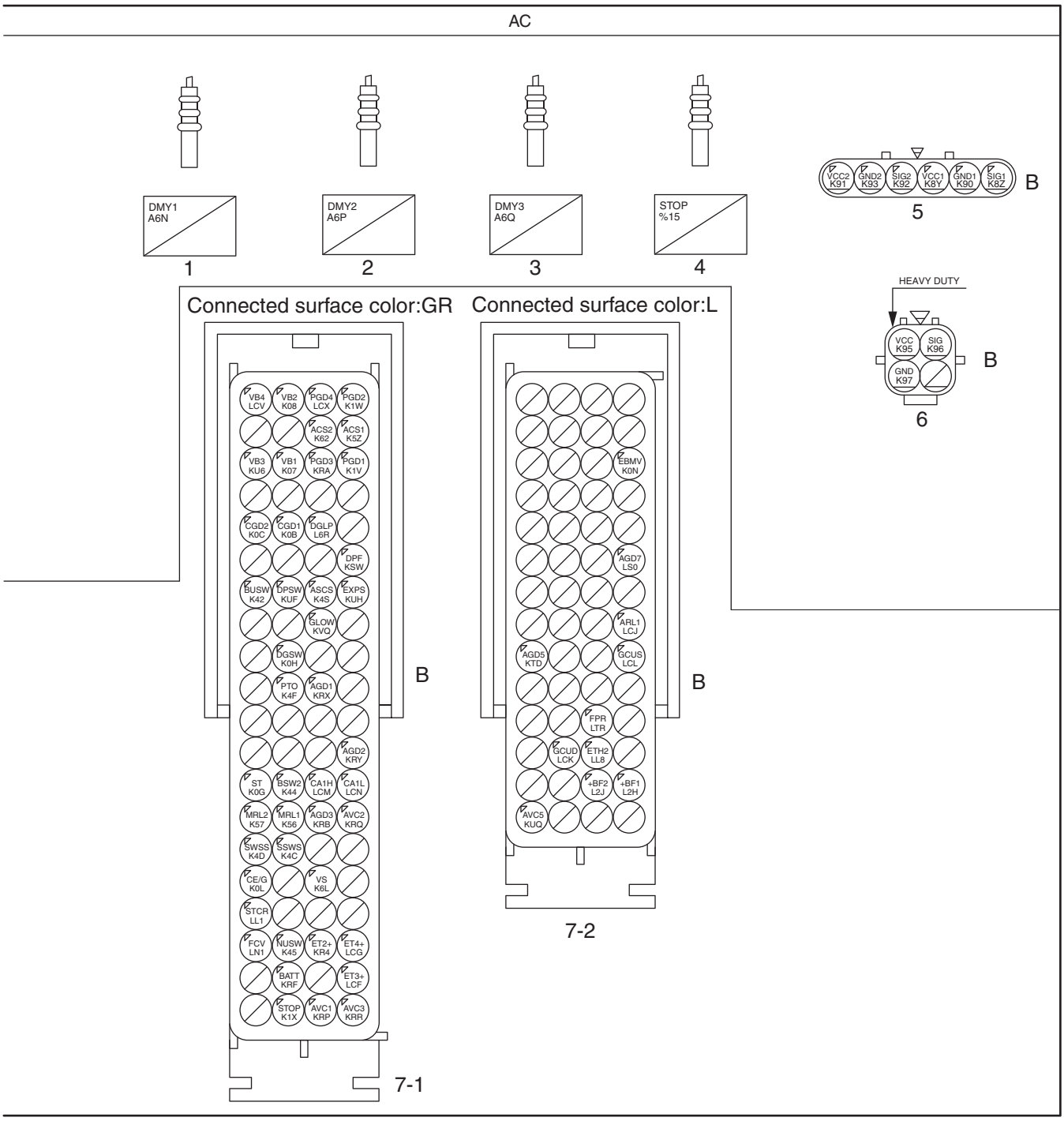


SAPH12Z080200092

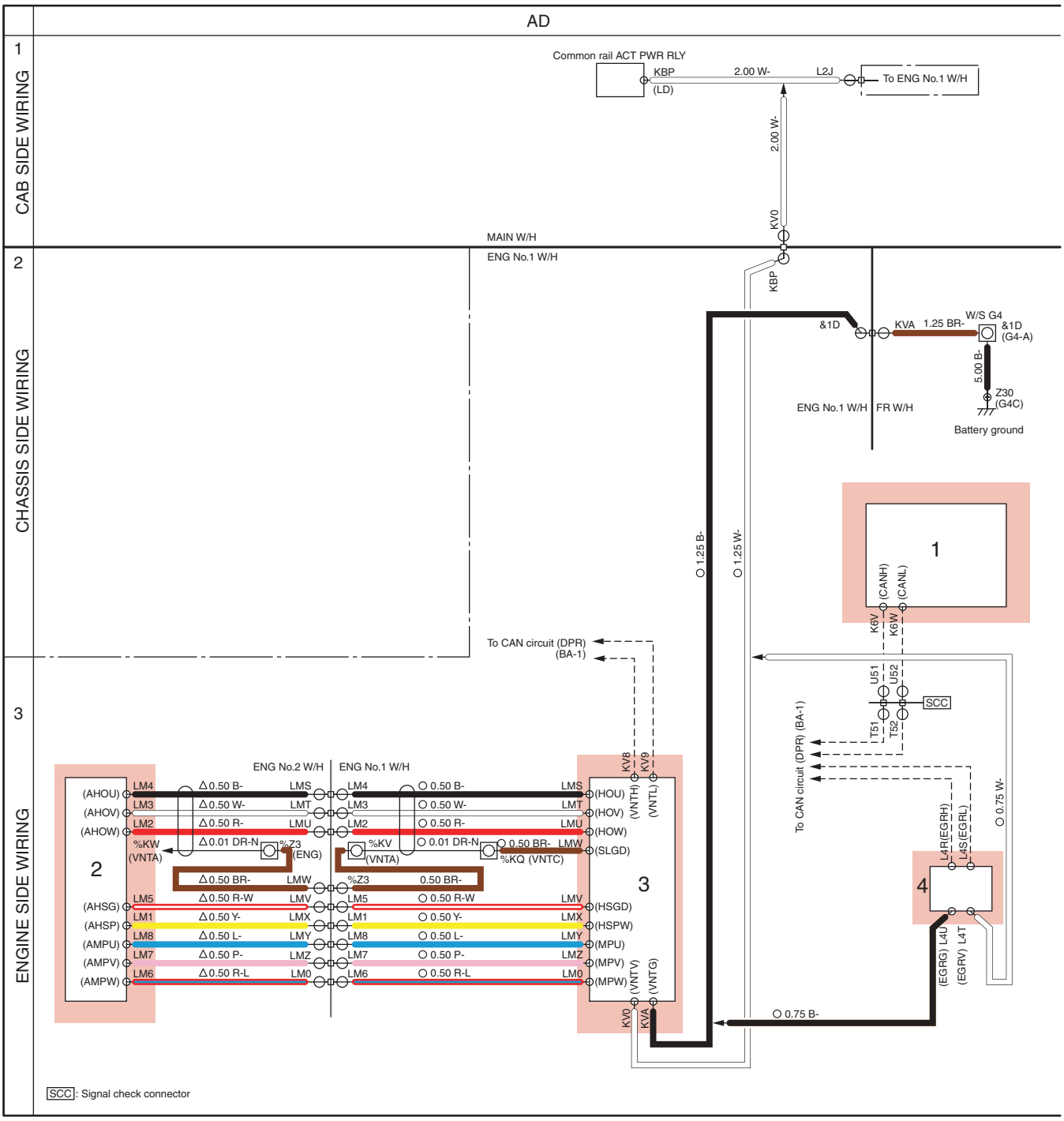


SAPH12Z080200093

**AD COMMON RAIL CIRCUIT-6:**

**1 Engine ECU**

**2 VNT actuator**

**3 VNT controller**

**4 EGR valve**

AD

Connected surface color:L

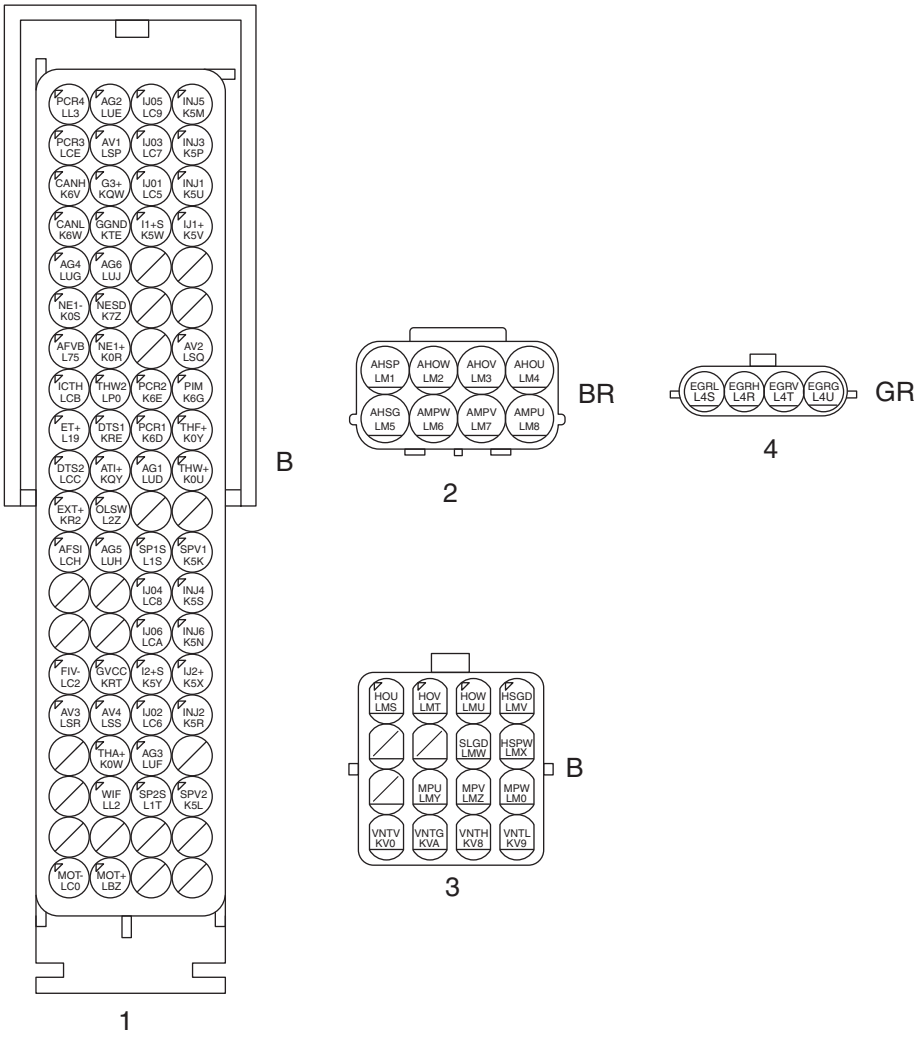


SAPH12Z080200094

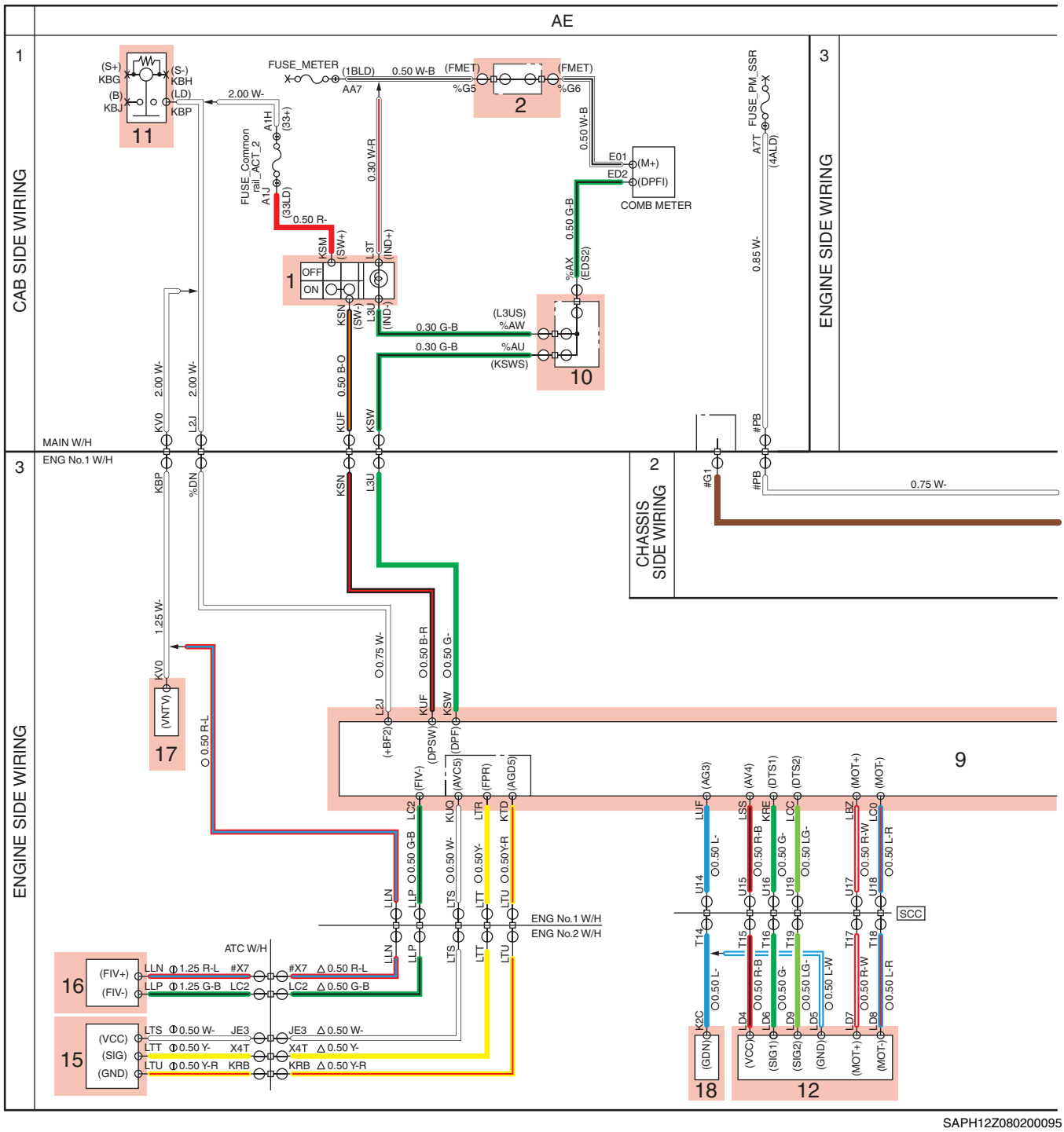


SAPH12Z080200095

**AE COMMON RAIL CIRCUIT-7: DPR: INTAKE THROTTLE VALVE POSITION SENSOR**

1 DPR manual regeneration switch
2 J/C signal
3 Exhaust gas temperature sensor 1 (ATC upstream)
4 Exhaust gas temperature sensor 3 (DOC inlet)
5 Exhaust gas temperature sensor 4 (DPR inlet)
6 Exhaust gas temperature sensor 5 (DPR outlet)
7 Exhaust gas pressure sensor
8 PTO accelerator sensor
9 Engine ECU
10 Common rail J/C No.2
11 Common rail actuator power relay
12 Intake throttle valve position sensor
13 Engine coolant temperature sensor 1
14 Air flow sensor
15 Aftertreatment fuel injection line pressure sensor
16 Aftertreatment fuel injector (Fuel dosing valve)
17 VNT controller
18 Boost pressure sensor

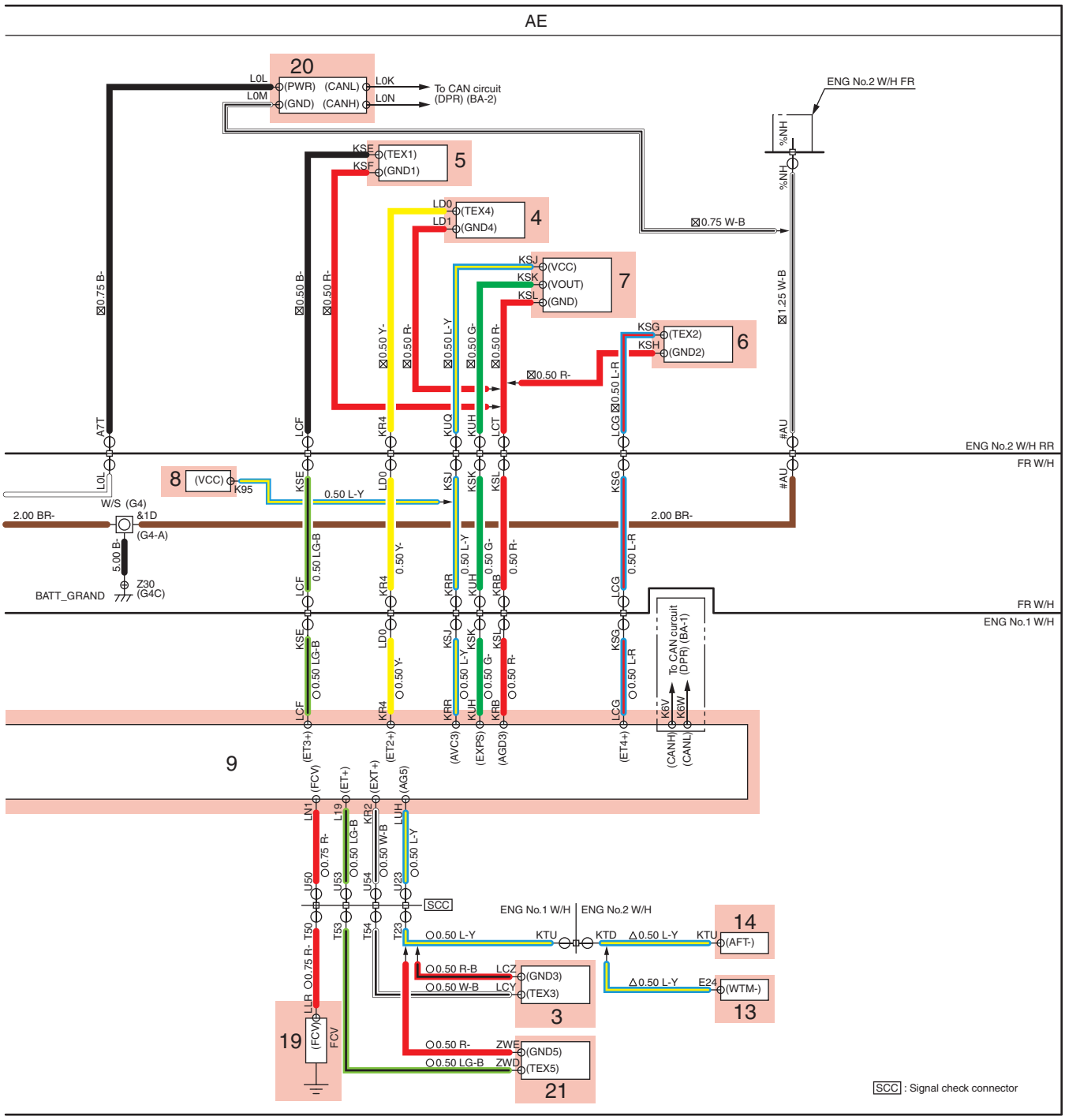


SAPH12Z080200096

**19 Fuel cut valve**

**20 PM sensor**

**21 Exhaust gas temperature sensor 2 (ATC downstream)**

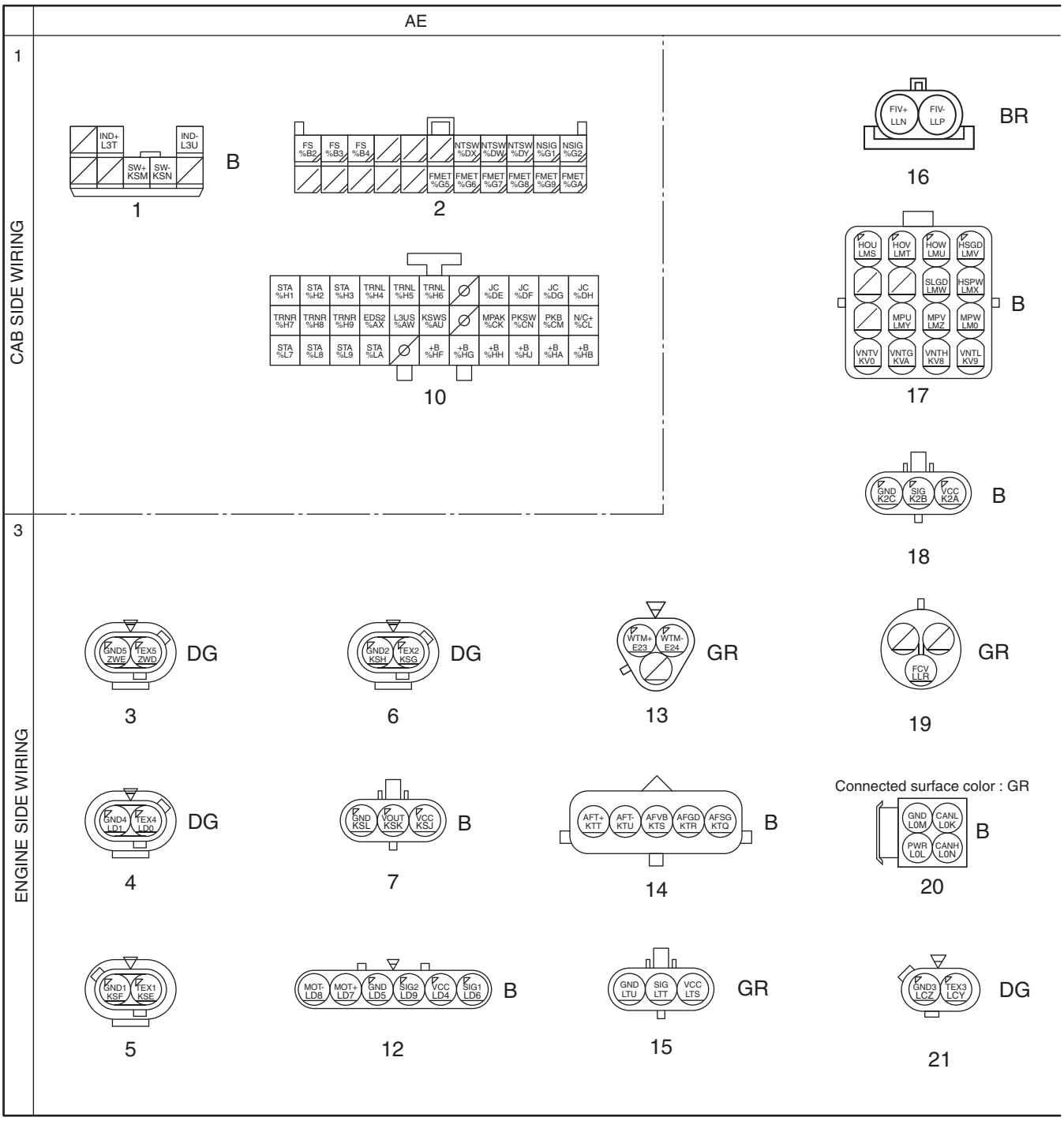


SAPH12Z080200097

AE

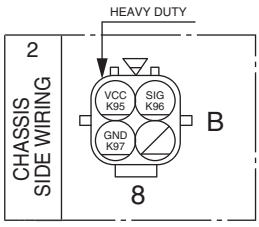


Connected surface color:L

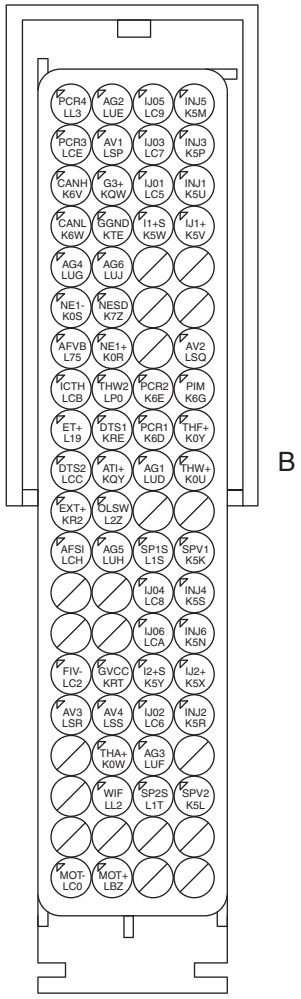


9-1

Connected surface color:L

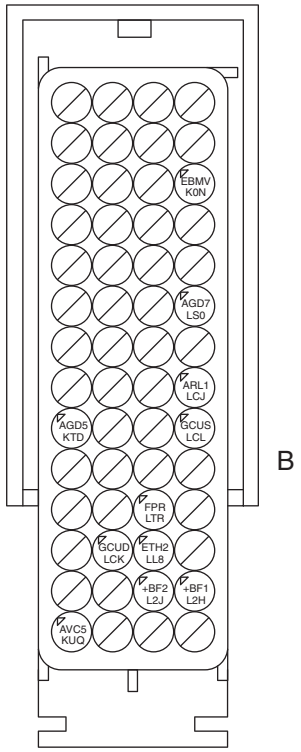


9-3

Connected surface color:GR

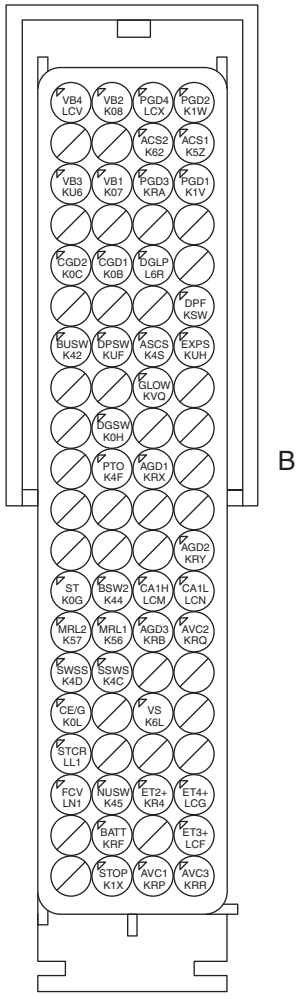


9-2

SAPH12Z080200098

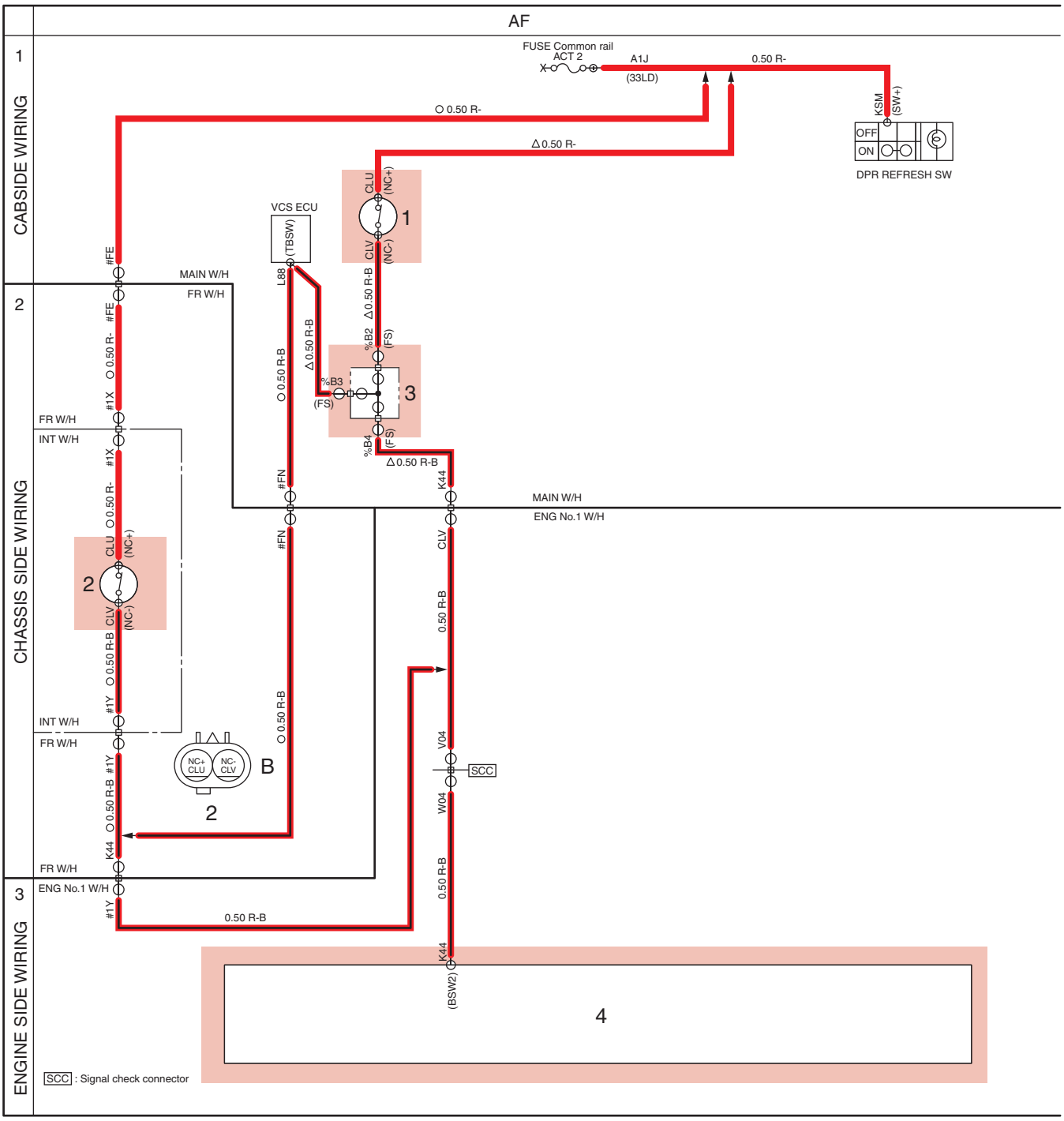


SAPH12Z080200099

**AF COMMON RAIL CIRCUIT-8: FS CRUISE**

**1 Brake switch (HYD)**

**2 Brake switch (Full air)**

**3 Common rail J/C No.1**

**4 Engine ECU**

AF




1

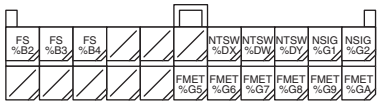


3

Connected surface color:GR

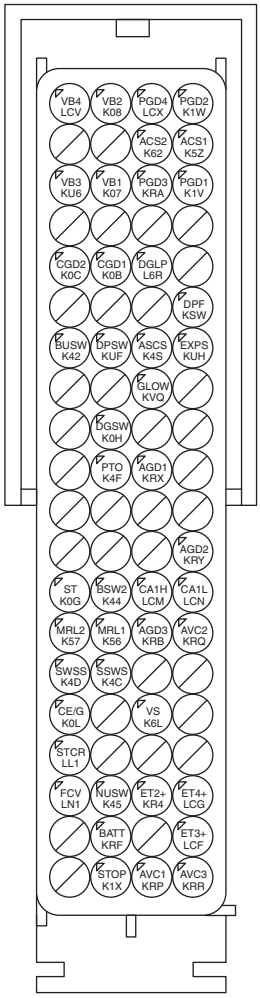


B

4

SAPH12Z080200100

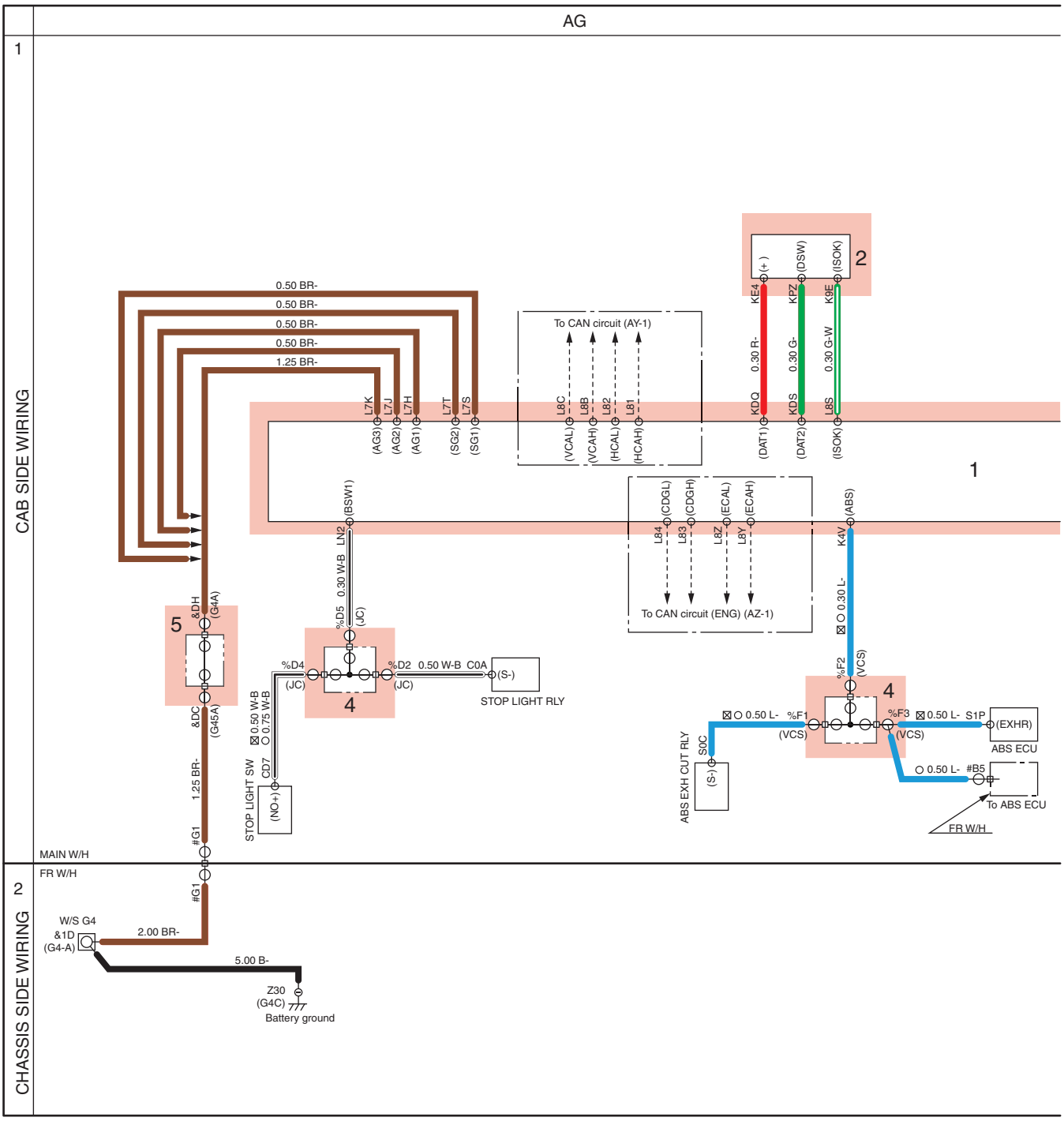


SAPH12Z080200101

**AG VEHICLE CONTROL ECU CIRCUIT-1**

1 Vehicle control ECU
2 DLC connector (16P)
3 VCS actuator relay
4 Common rail J/C No.1
5 J/C ground
6 Common rail J/C No.2
7 Actuator J/C No.1
8 Actuator J/C No.2
9 Actuator J/C No.3

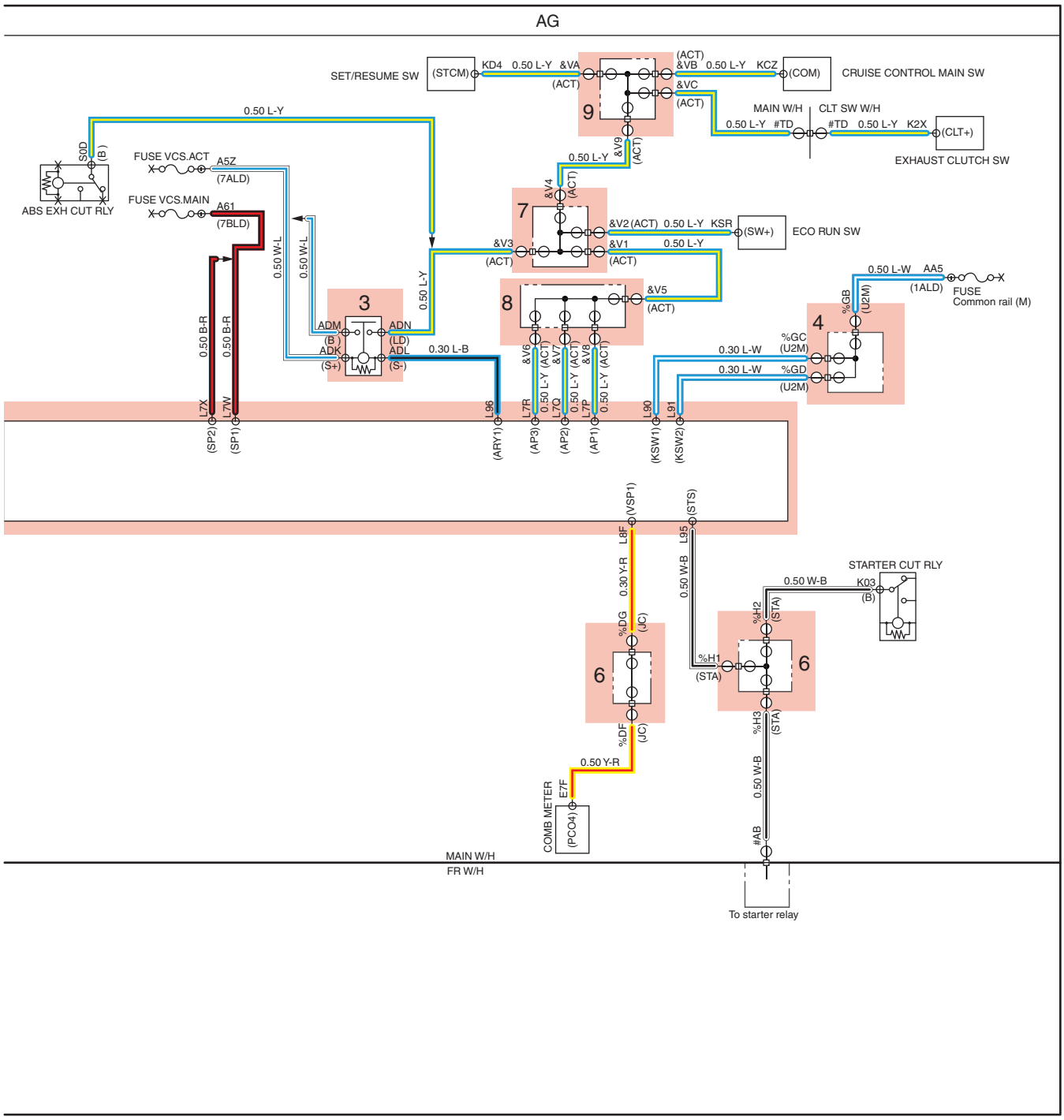


SAPH12Z080200102

AG

1 CAB SIDE WIRING

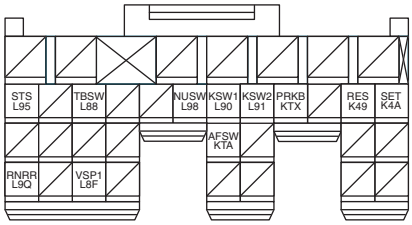


1-1

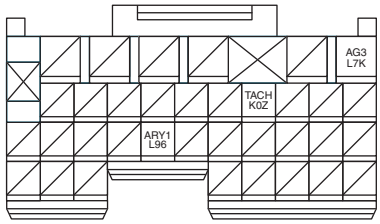


B

1-4

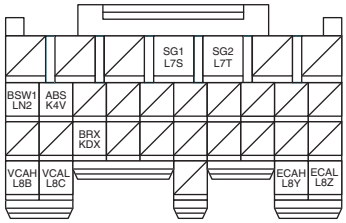


B

1-2

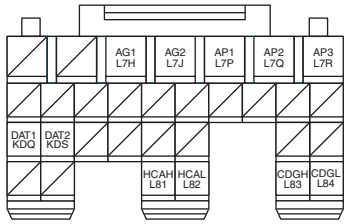


1-5

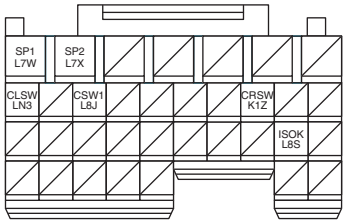


B

1-3

2 CHASSIS SIDE WIRING

SAPH12Z080200103

AG

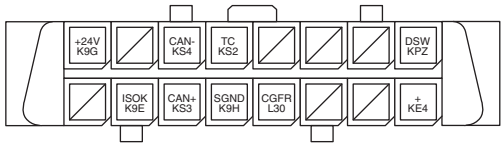


B

2

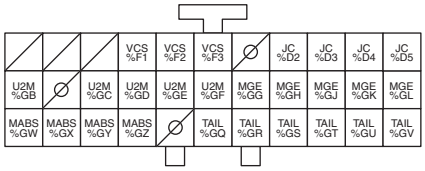


4

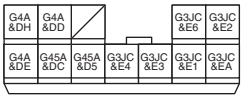


5

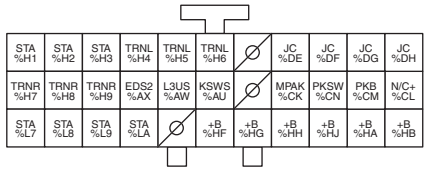


6

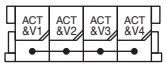


7

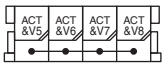


8

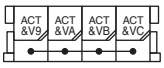


9

SAPH12Z080200104

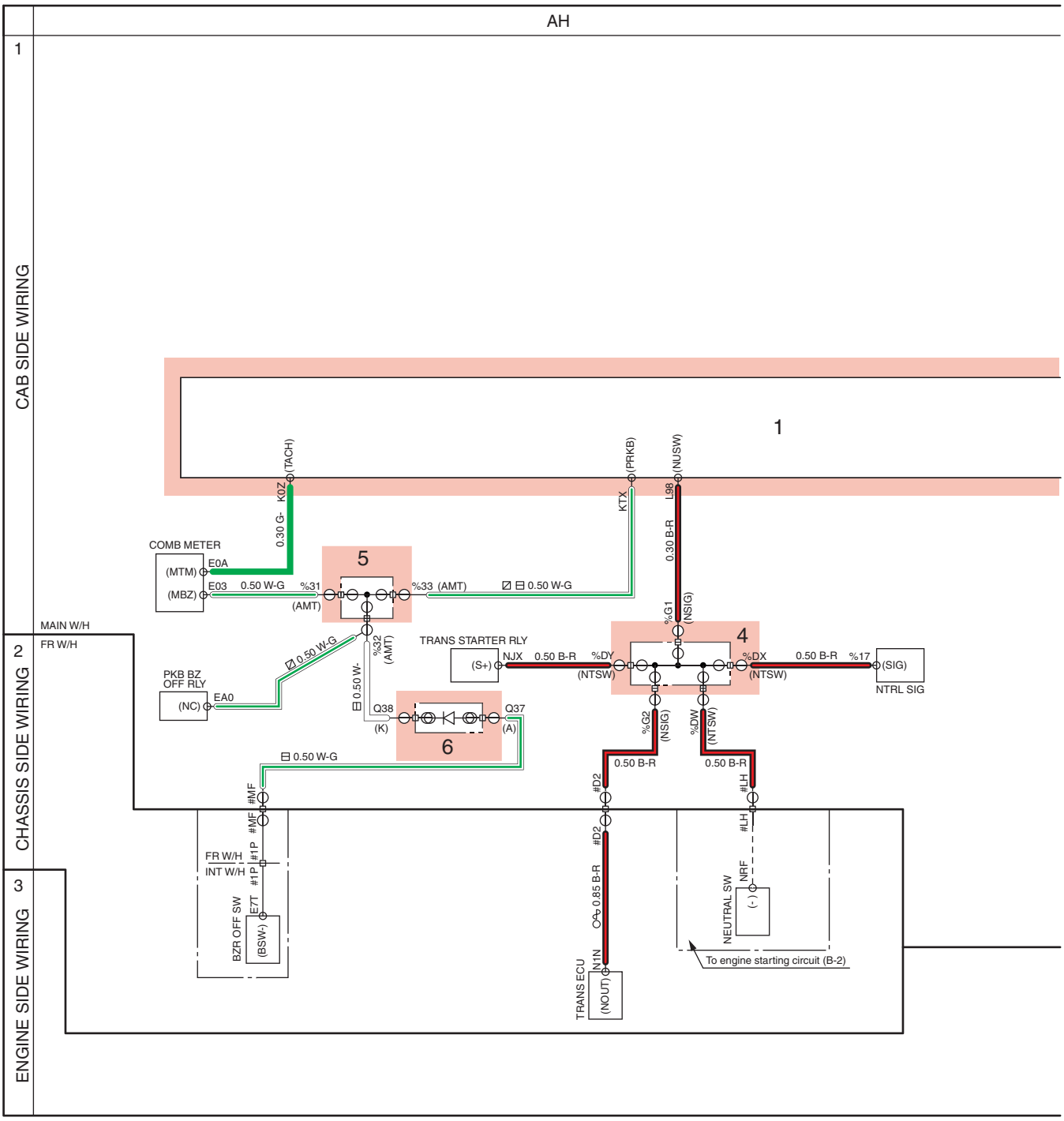


SAPH12Z080200105

**AH VEHICLE CONTROL ECU CIRCUIT-2**

| | | | |
|---|---|---|---|
| 1 | Vehicle control ECU | 5 | Parking brake 4P J/C |
| 2 | Economy running switch | 6 | Air suspension dump diode No.1 |
| 3 | J/C ground | 7 | Actuator J/C No.1 |
| 4 | J/C signal | 8 | Common rail J/C No.1 |

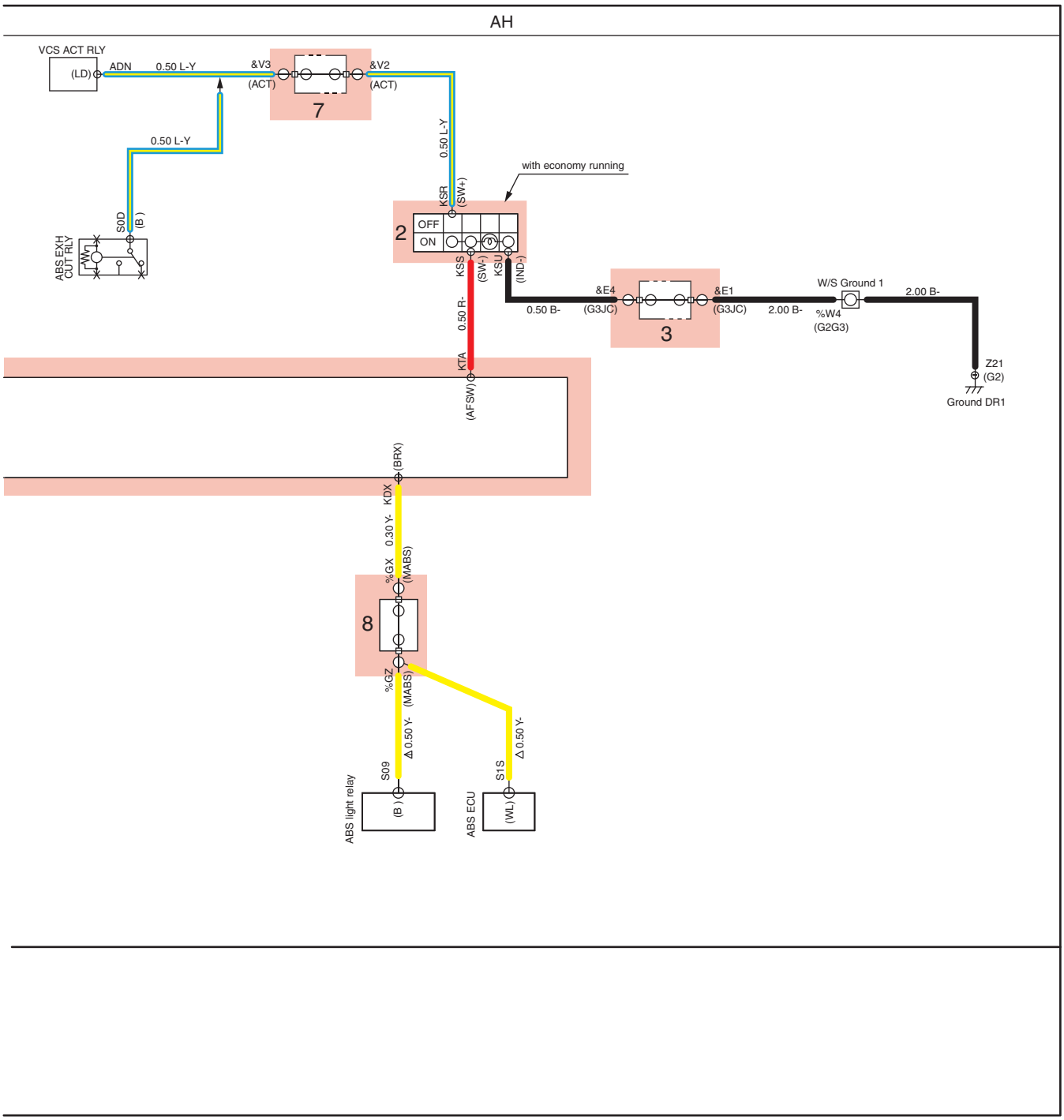


SAPH12Z080200106

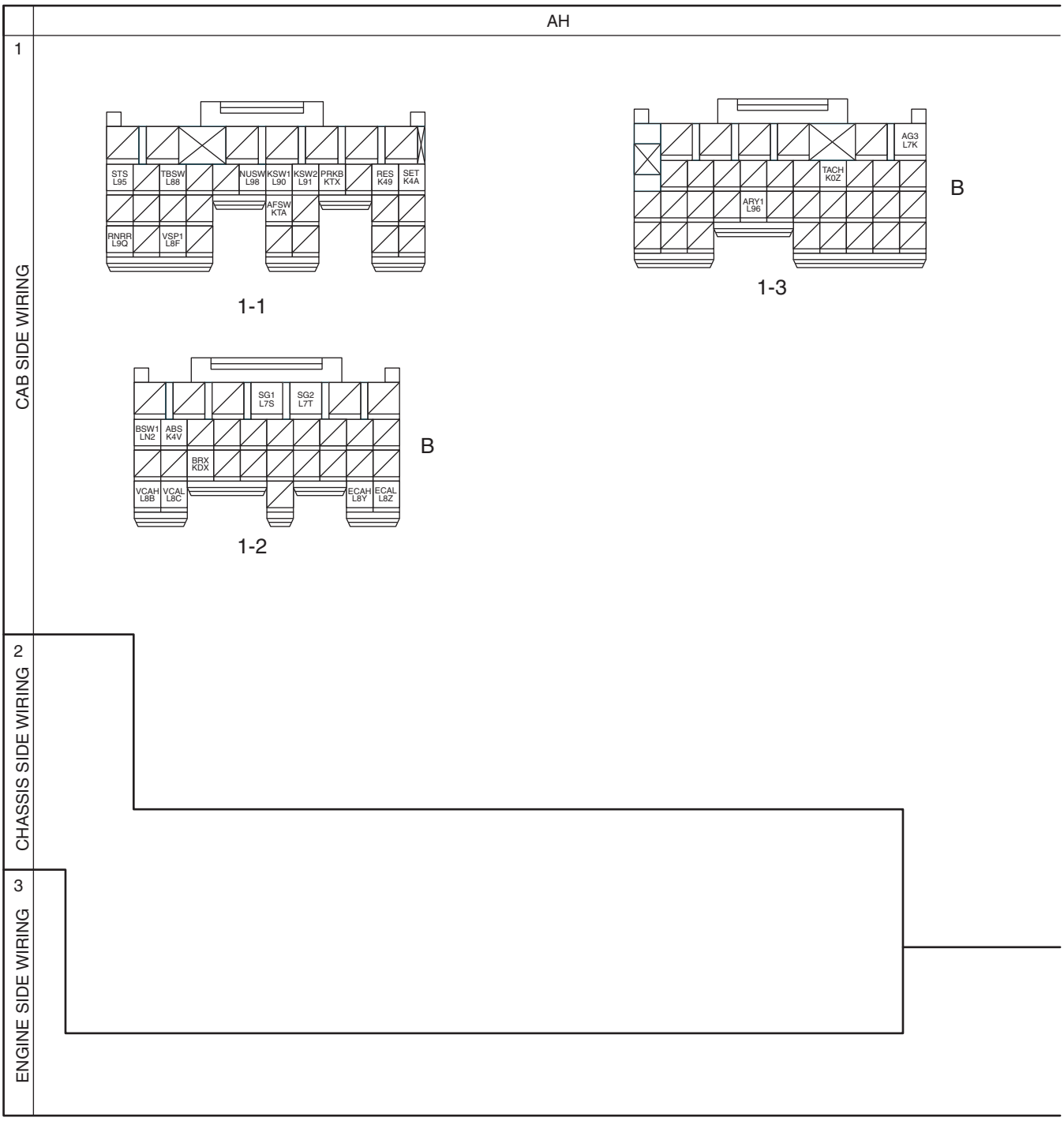


SAPH12Z080200107

AH

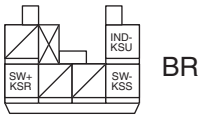


2

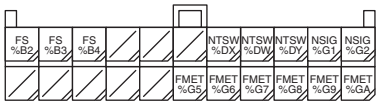


4

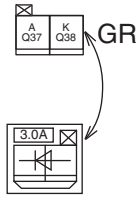


6




3

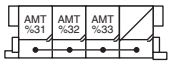


5

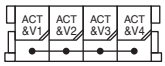


7

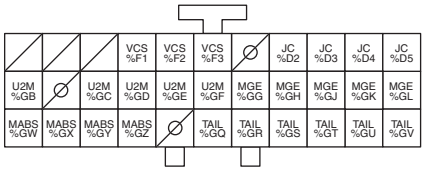


8

SAPH12Z080200108

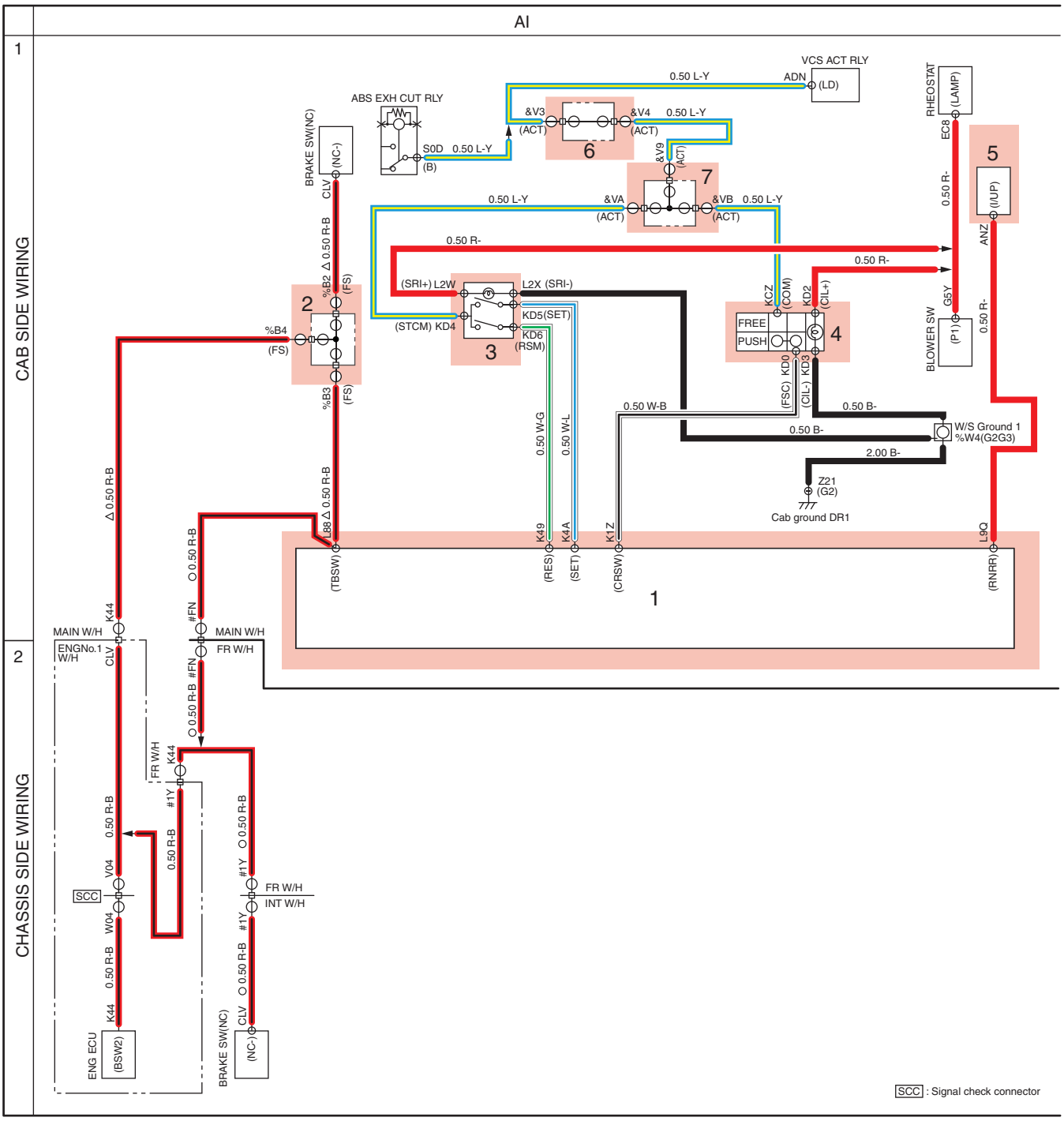


SAPH12Z080200109

**AI VEHICLE CONTROL ECU CIRCUIT-3**

1 Vehicle control ECU
2 J/C signal
3 Set/resume switch
4 Cruise control main switch
5 Idle up signal
6 Actuator J/C No.1
7 Actuator J/C No.3

AI

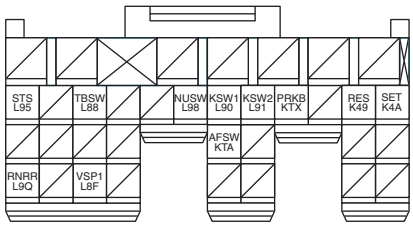


1-1

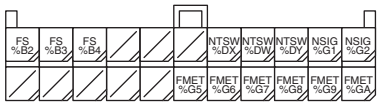


2



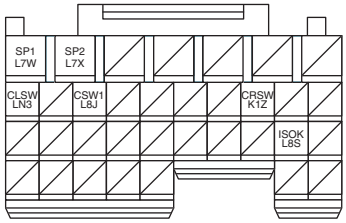


B

1-2

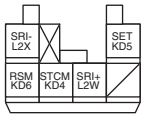


BR

3

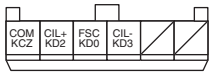


B

4

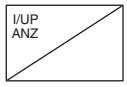


5

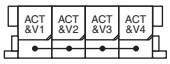


6

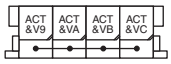


7

SAPH12Z080200110

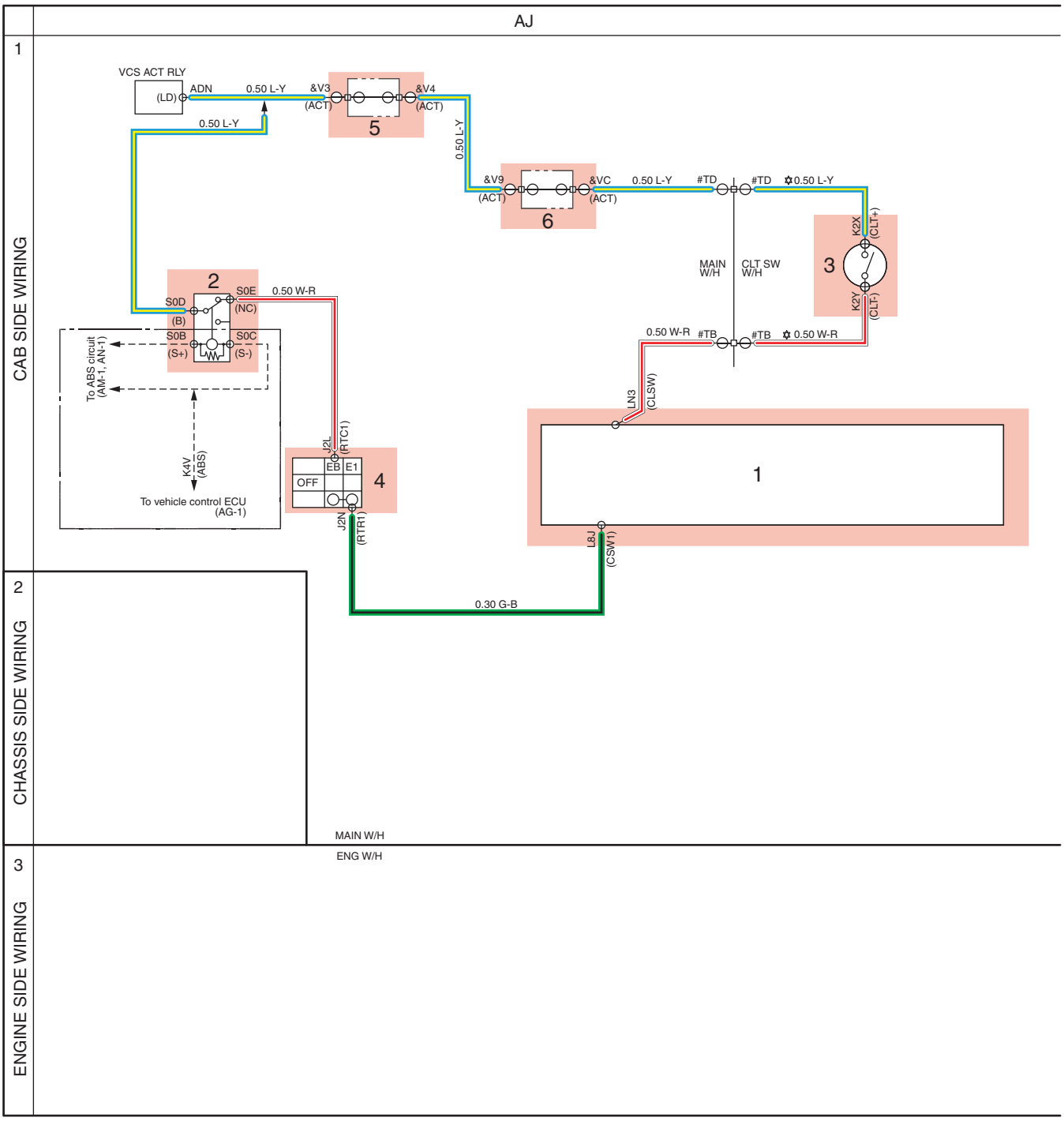


SAPH12Z080200111

**AJ VEHICLE CONTROL ECU CIRCUIT-4**

**1 Vehicle control ECU**

**2 ABS exhaust cut relay**

**3 Exhaust clutch switch**

**4 Wiper and retarder switch**

**5 Actuator J/C No.1**

**6 Actuator J/C No.3**

AJ

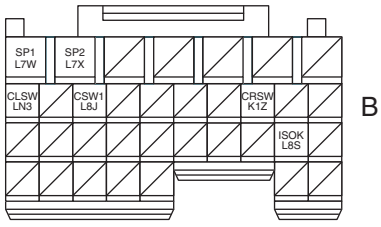


1




3

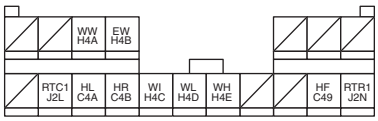


4

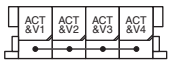


5

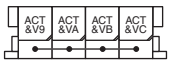


6

SAPH12Z080200112

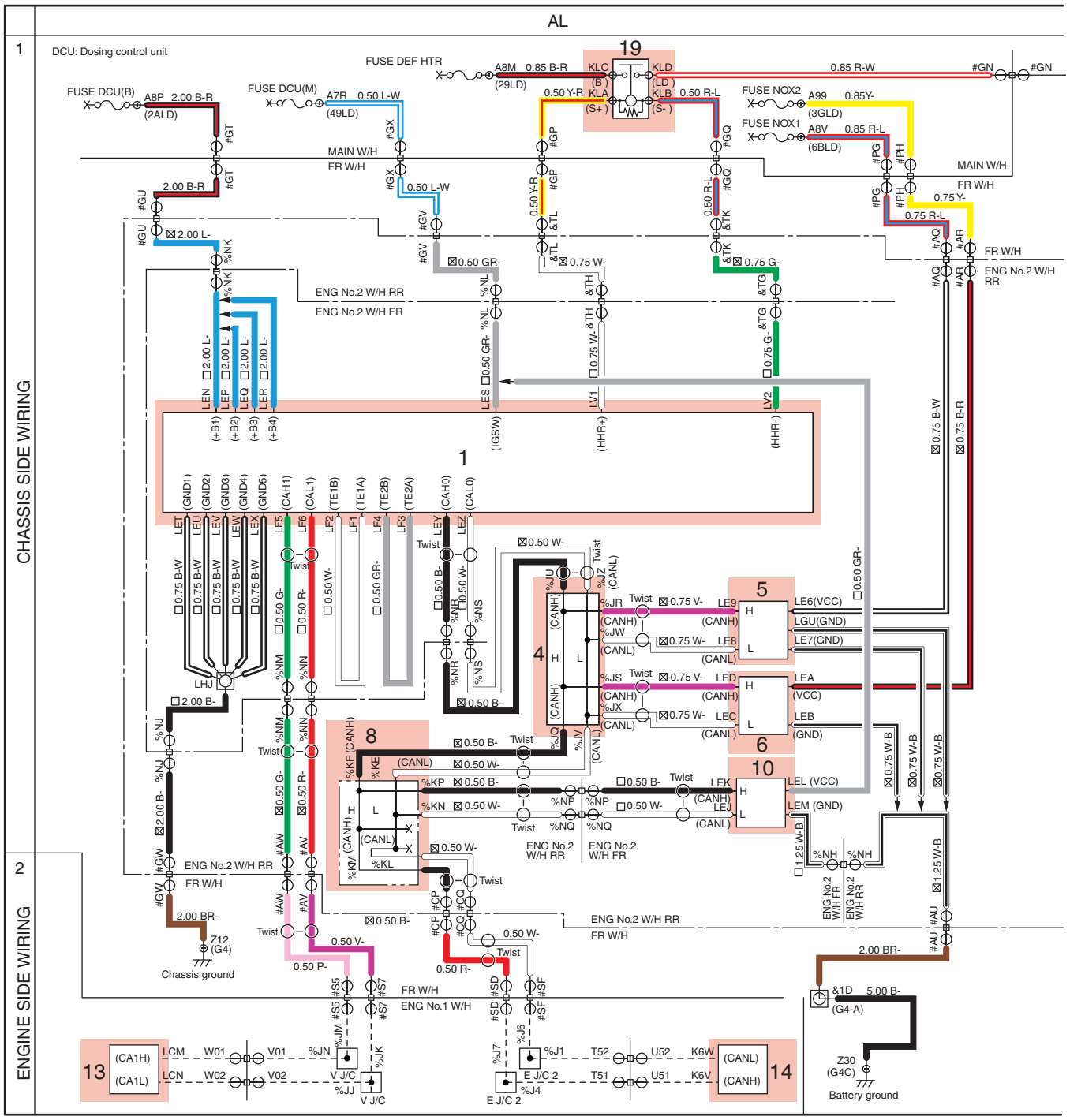


**AL DEF SCR CIRCUIT**

1 Dosing control unit 53P
2 Dosing control unit 86P
3 DEF pump
4 Common rail CAN J/C No.4
5 NOx sensor 1
6 NOx sensor 2
7 Ambient air temperature sensor
8 Common rail CAN J/C No.1
9 DEF dosing valve
10 DEF sensor
11 Coolant cut off valve
12 Exhaust gas temperature sensor (SCR inlet)
13 Engine ECU
14 Engine ECU
15 External resistance
16 DEF heater 1
17 DEF heater 2
18 DEF heater 3
19 DEF heater relay

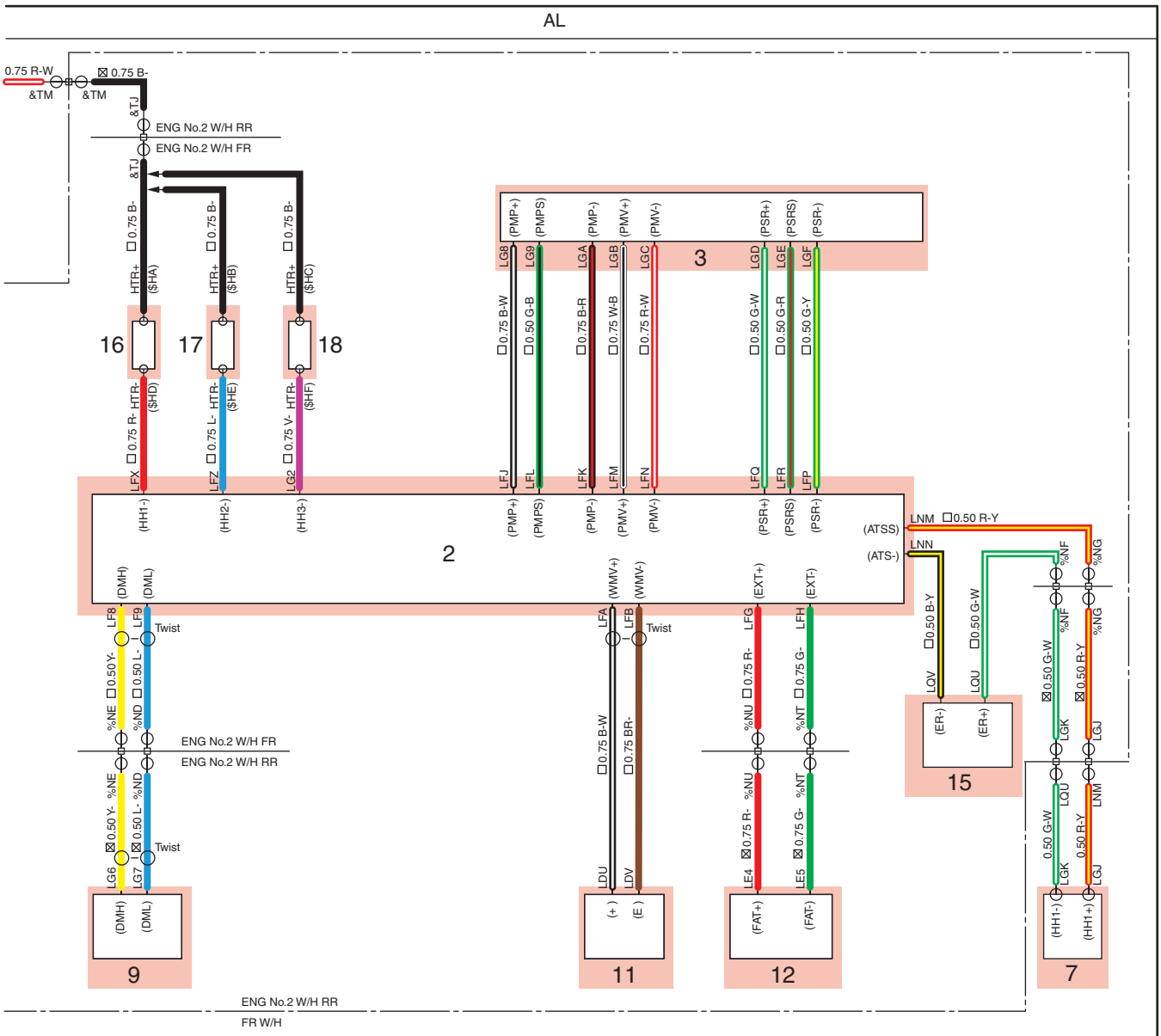


SAPH12Z080200114

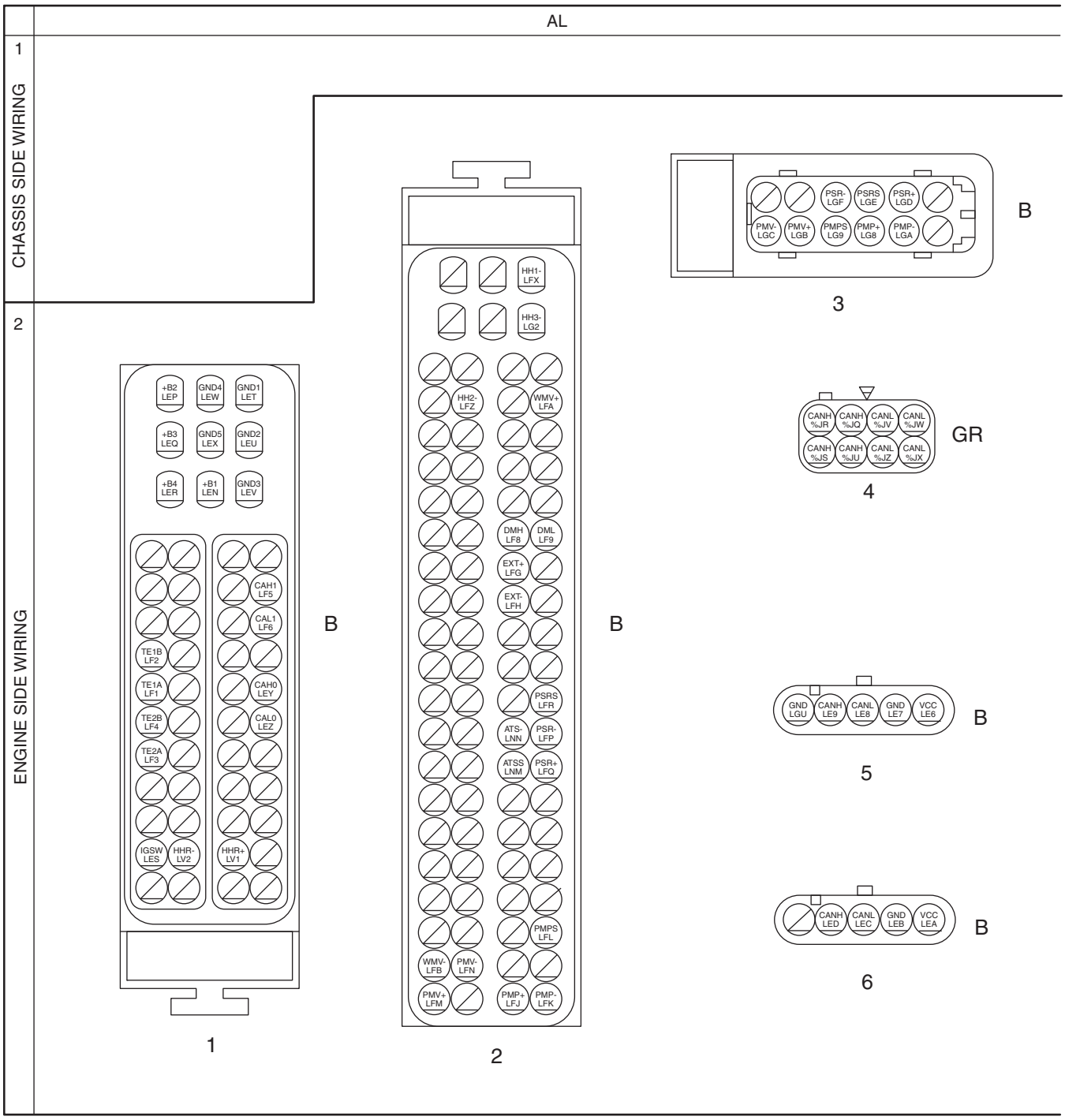


SAPH12Z080200115

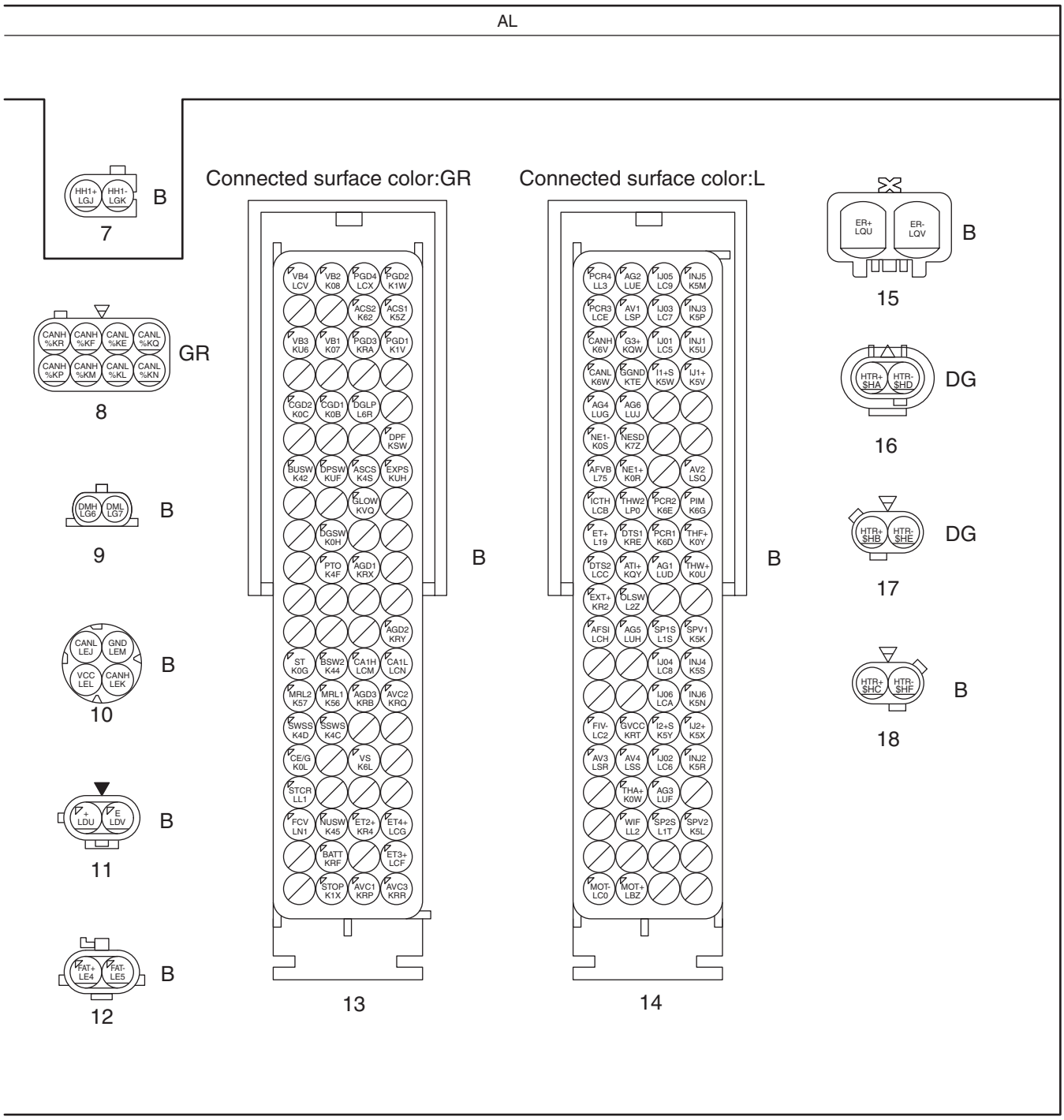


SAPH12Z080200116

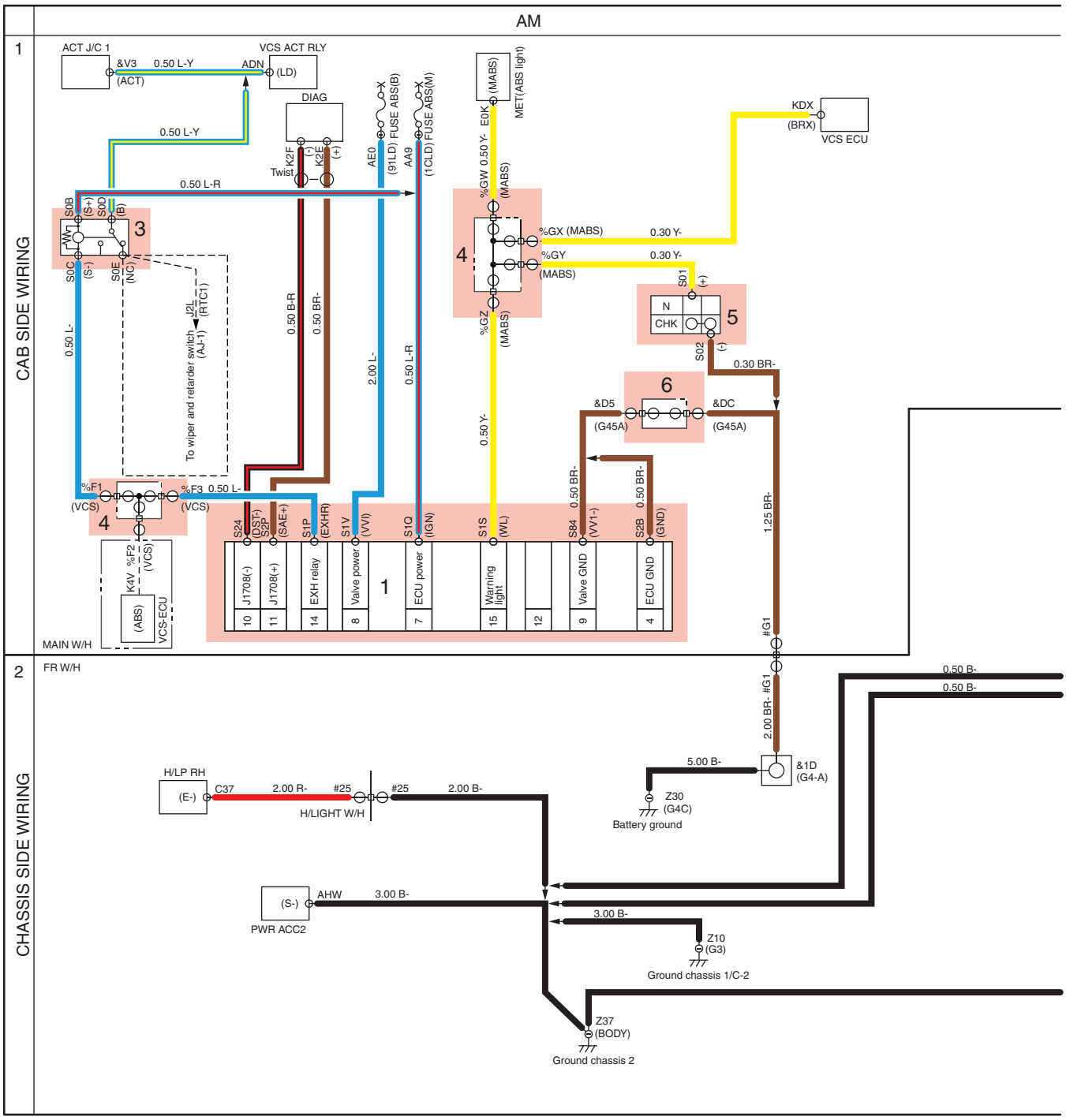


SAPH12Z080200117

**AM ABS CIRCUIT-1 (FOR FULL AIR BRAKE)**

1 ABS ECU E
2 ABS ECU F
3 ABS exhaust cut relay
4 Common rail J/C No.1
5 ABS diagnosis switch
6 J/C ground
7 Modulator front LH
8 Wheel sensor front LH
9 Modulator front RH
10 Wheel sensor front RH
11 Modulator rear LH
12 Wheel sensor rear LH
13 Modulator rear RH
14 Wheel sensor rear RH

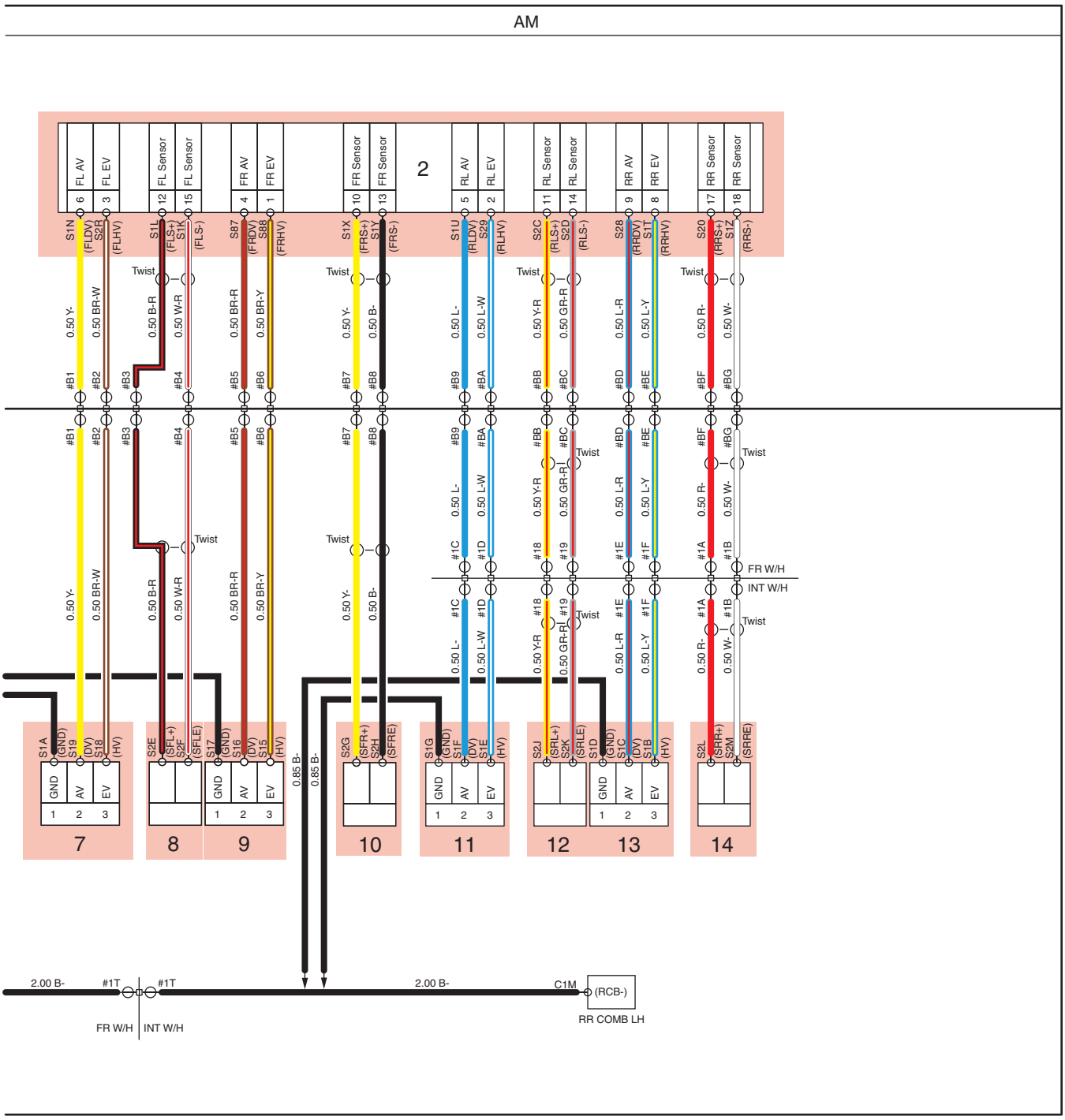


SAPH12Z080200118

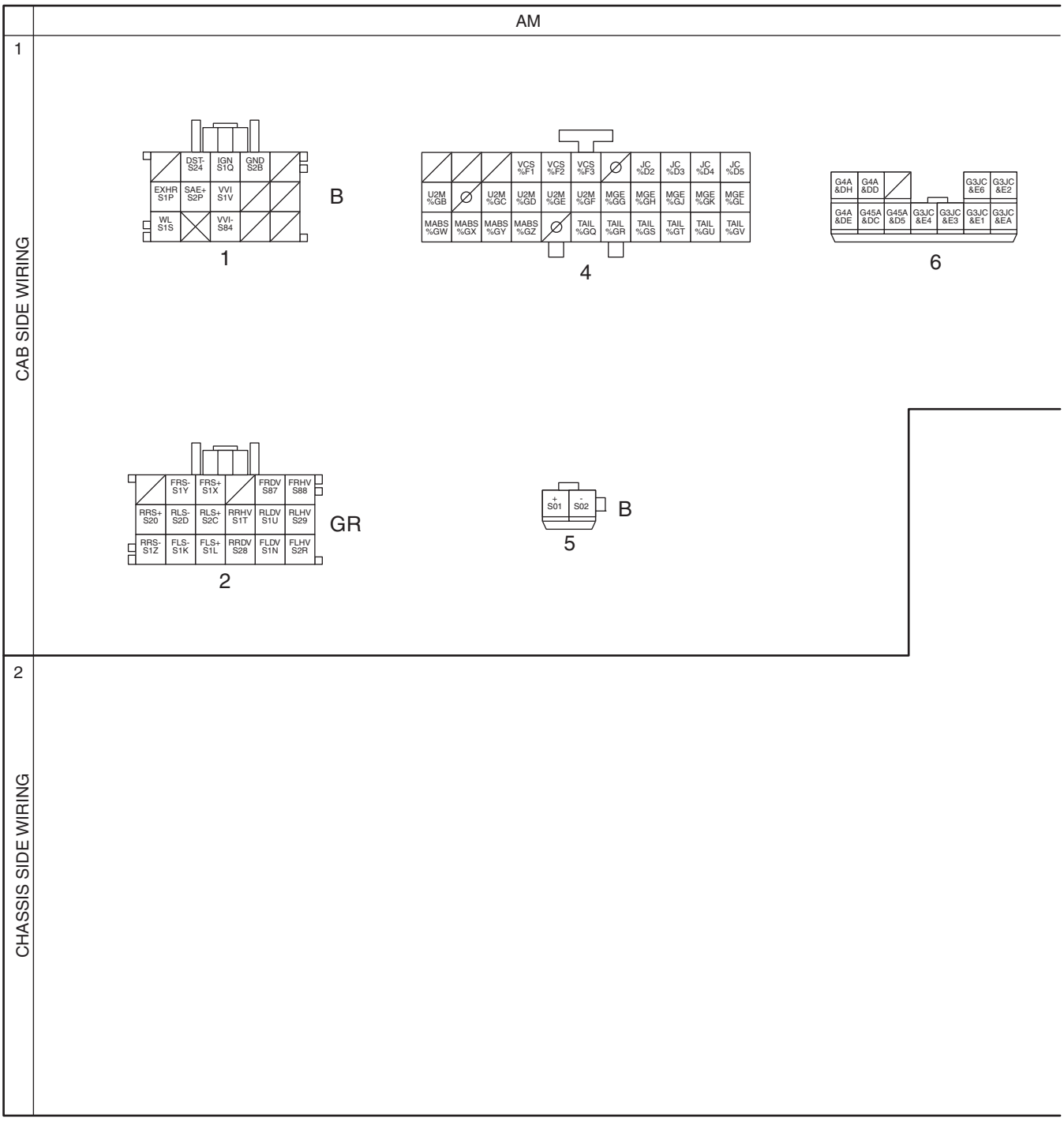


SAPH12Z080200119

AM

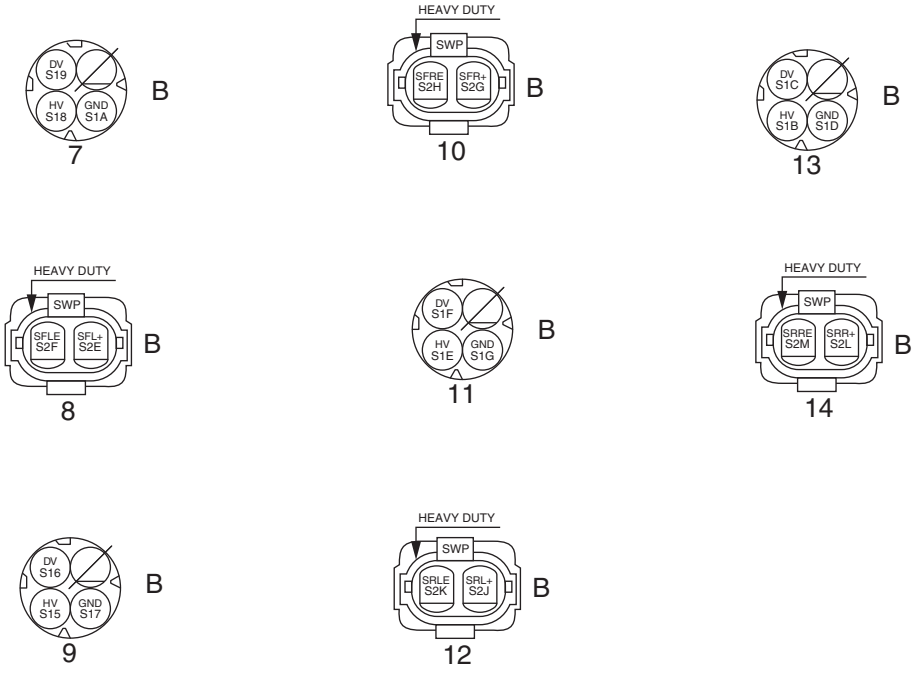


SAPH12Z080200120

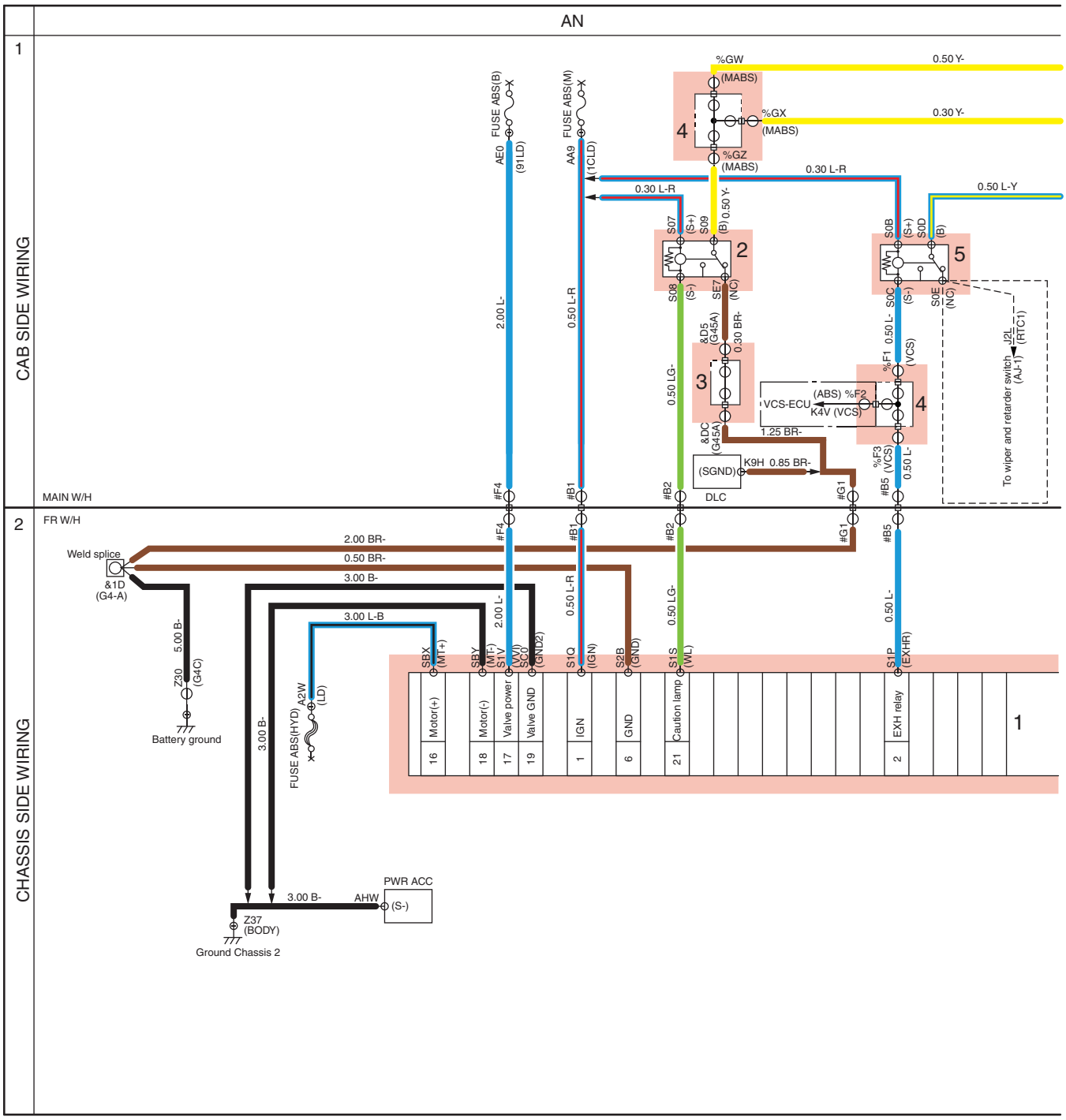


SAPH12Z080200121

**AN ABS CIRCUIT-2 (FOR HYDRO MAX BRAKE E VERSION)**

| | | | |
|---|---|---|---|
| **1** | **ABS HYDRO MAX unit with ECU** | **6** | **Wheel sensor front LH** |
| **2** | **ABS warning light relay** | **7** | **Wheel sensor front RH** |
| **3** | **J/C ground** | **8** | **Wheel sensor rear LH** |
| **4** | **Common rail J/C No.1** | **9** | **Wheel sensor rear RH** |
| **5** | **ABS exhaust cut relay** | | |

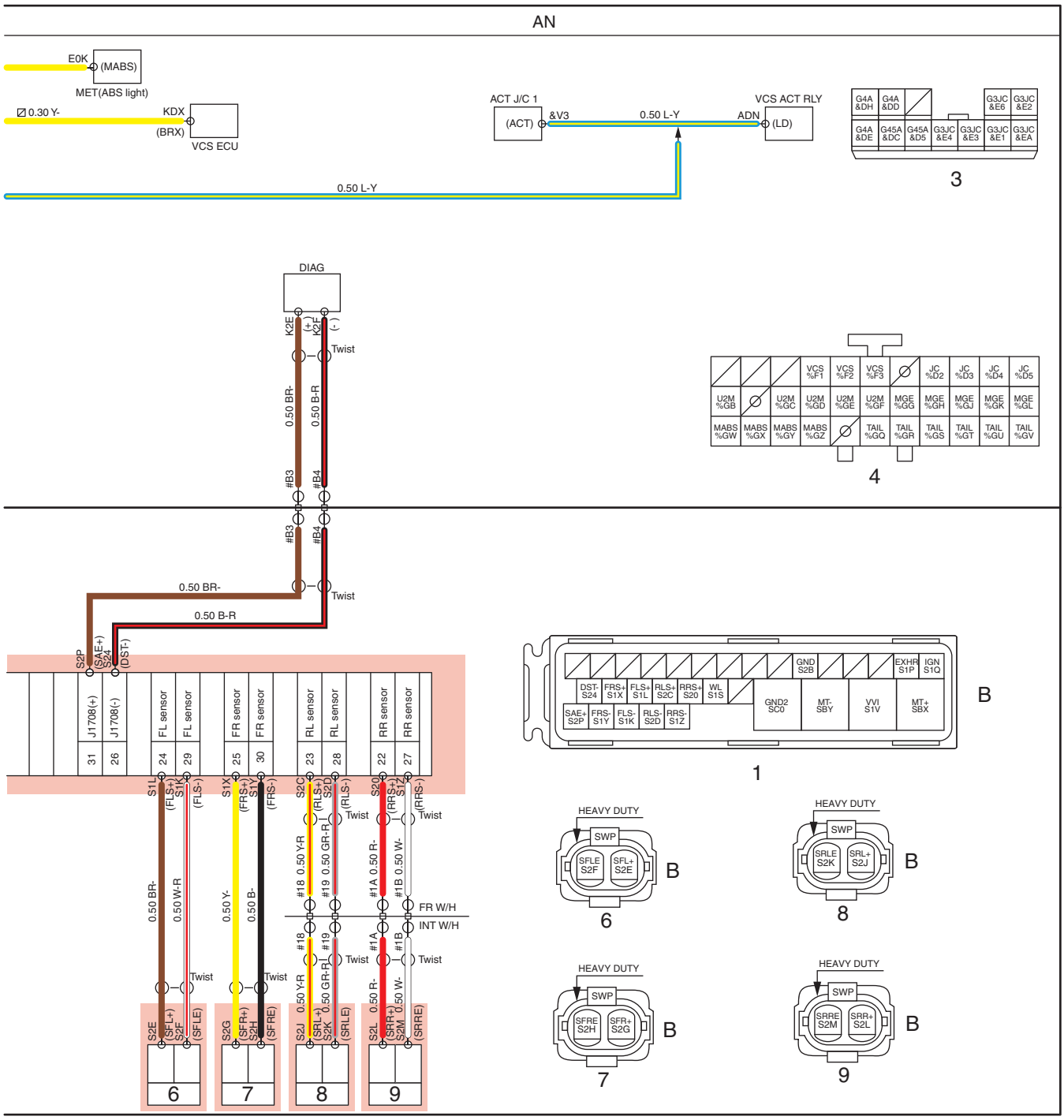


SAPH12Z080200122

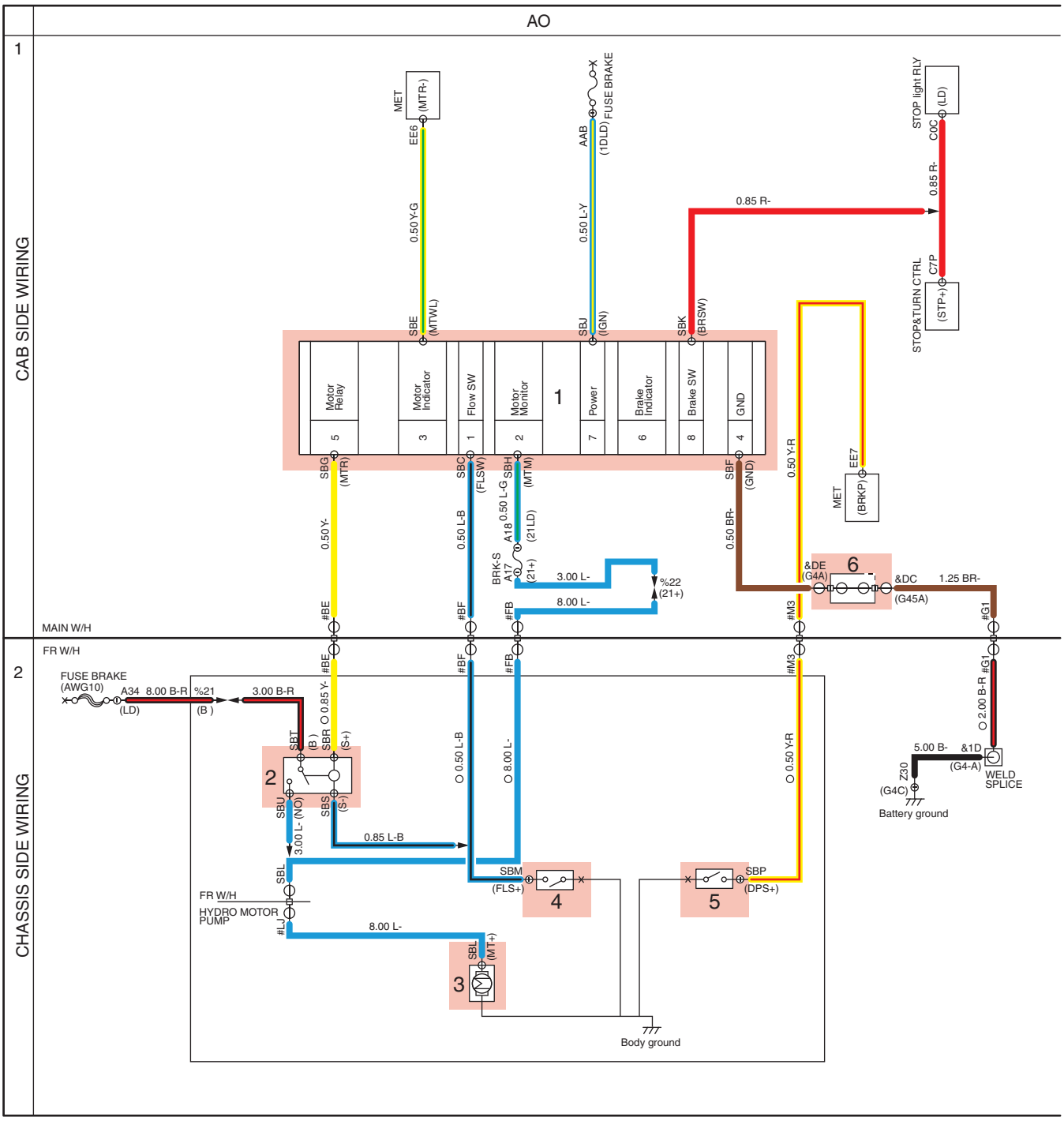


SAPH12Z080200123

**AO HYDRO MAX SYSTEM CIRCUIT**

**1 Monitor module**

**2 Motor relay**

**3 Motor pump**

**4 Flow switch**

**5 Differential switch**

**6 J/C ground**

AO

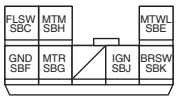


GR

1

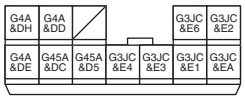


6

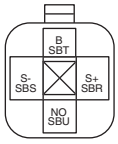


B

2




GR

4




B

3

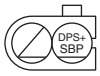


B

5

SAPH12Z080200124

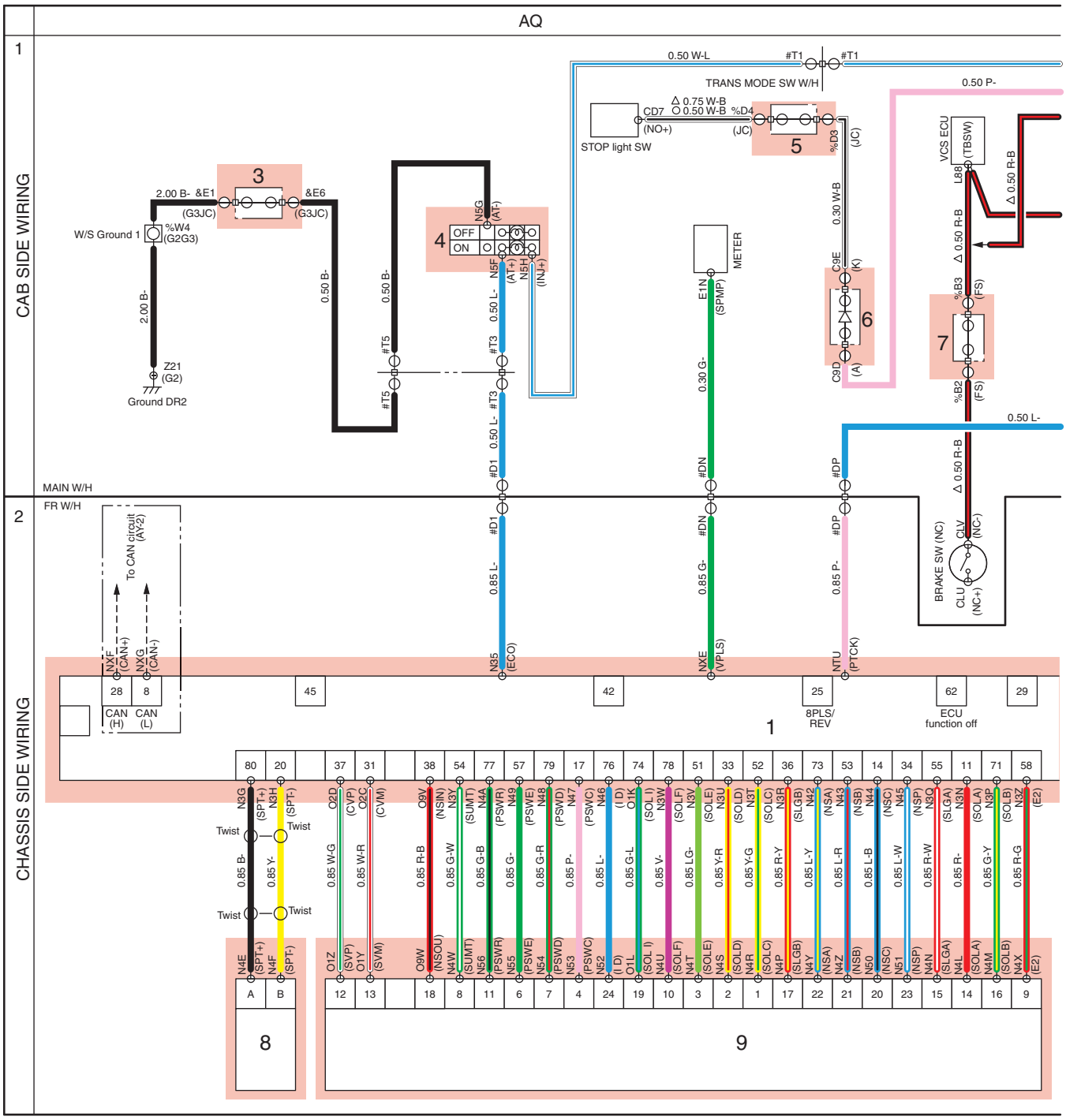


SAPH12Z080200125

**AQ AUTOMATIC TRANSMISSION CIRCUIT-1: EQUIPPED WITH ALLISON 2000 AUTOMATIC TRANSMISSION**

1 ALLISON 2000 TRANS ECU
2 TRANS back-up light relay
3 J/C ground
4 TRANS mode switch
5 Common rail J/C No.1
6 STP TRANS diode
7 J/C signal
8 Turbine speed sensor
9 Main transmission
10 Output speed sensor
11 Engine speed sensor
12 PTO service
13 TRANS stop NC relay
14 TRANS stop dummy relay
15 TRANS stop NC diode

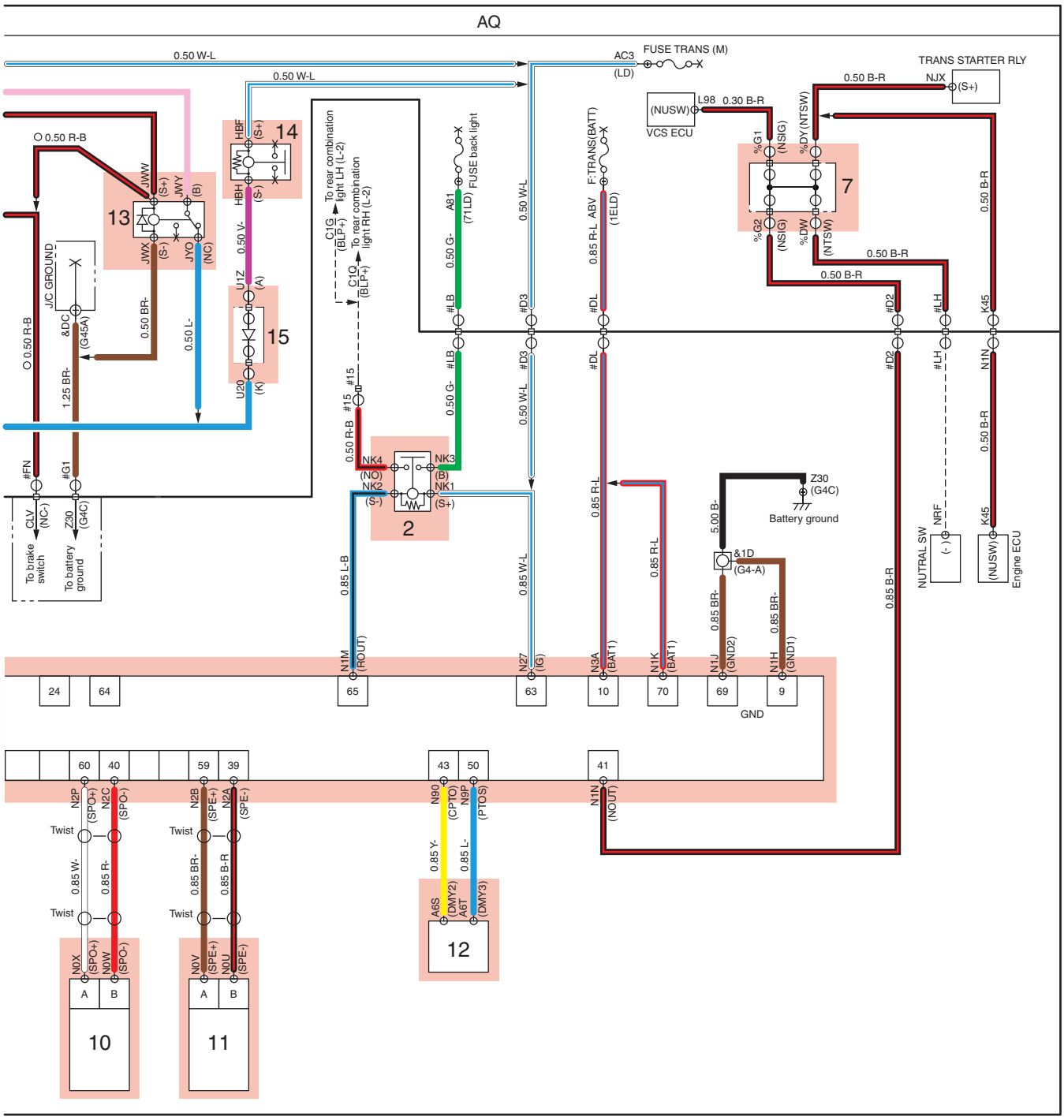


SAPH12Z080200126

AQ

CAB SIDE WIRING

1

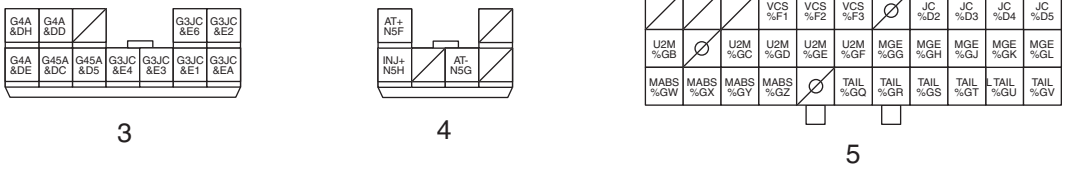


3 4 5

MAIN W/H

CHASSIS SIDE WIRING

2

FR W/H

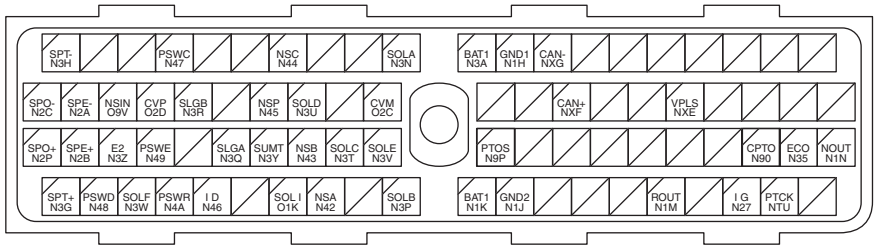


1

B

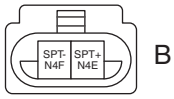


8

B

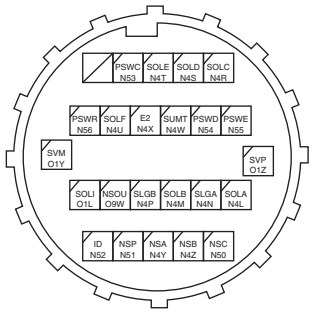


9

B

SAPH12Z080200127

AQ

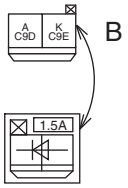


6

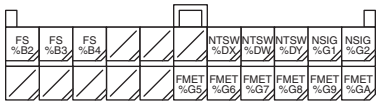


7

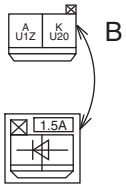


15

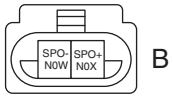


10

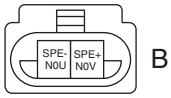


11

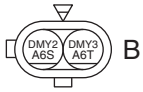


12

SAPH12Z080200128

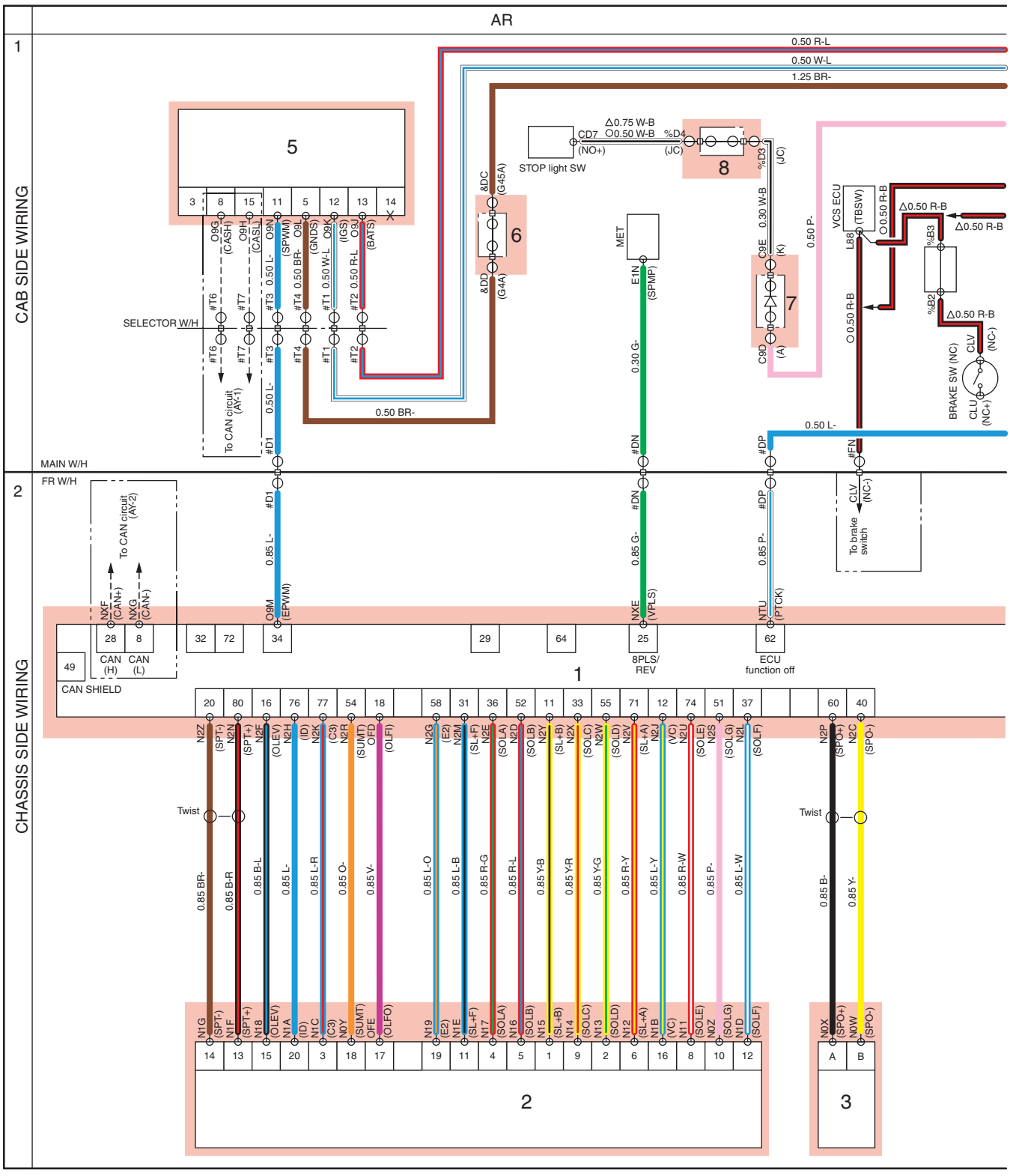


SAPH12Z080200129

**AR AUTOMATIC TRANSMISSION CIRCUIT-2: EQUIPPED WITH ALLISON 3000RDS AUTOMATIC TRANSMISSION**

1 ALLISON 3000RDS TRANS ECU
2 MAIN Transmission
3 Output speed sensor
4 Engine speed sensor
5 Selector
6 J/C ground
7 STP TRANS diode
8 Common rail J/C No.1
9 J/C signal
10 TRANS back-up light relay
11 PTO service
12 TRANS stop NC relay

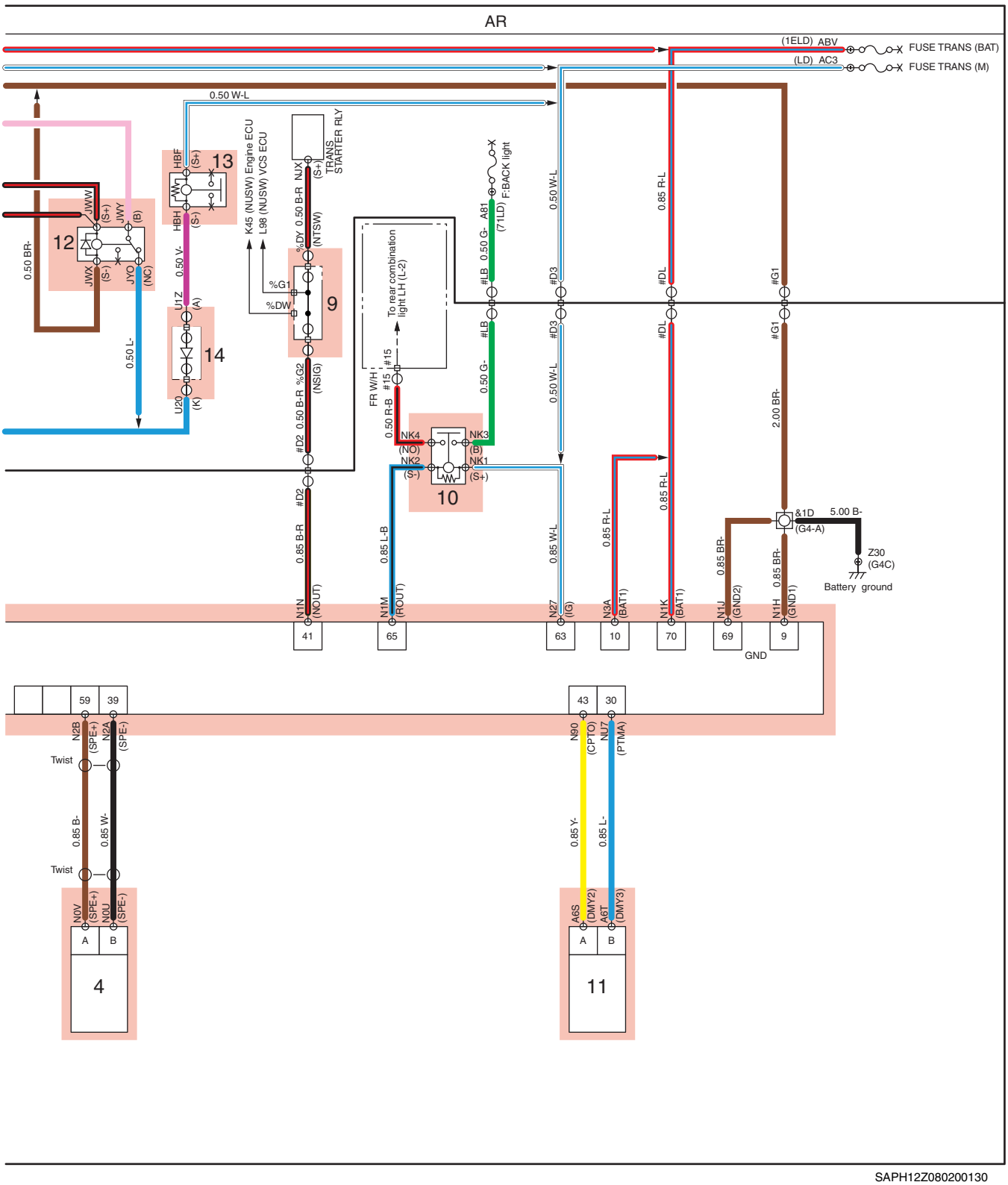


**13 TRANS stop dummy relay**

**14 TRANS stop NC diode**

AR

1

CAB SIDE WIRING

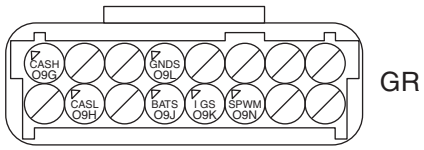


GR

5




6

2

CHASSIS SIDE WIRING

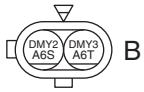


B

11

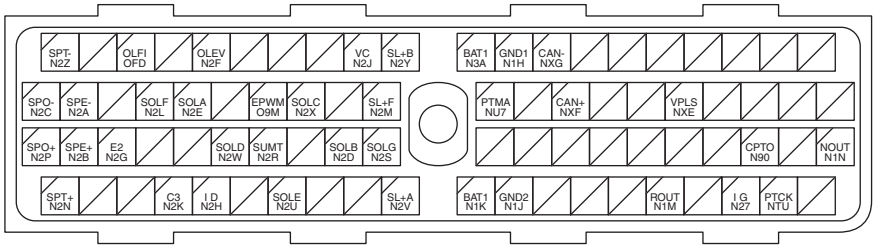


B

1

SAPH12Z080200131

AR

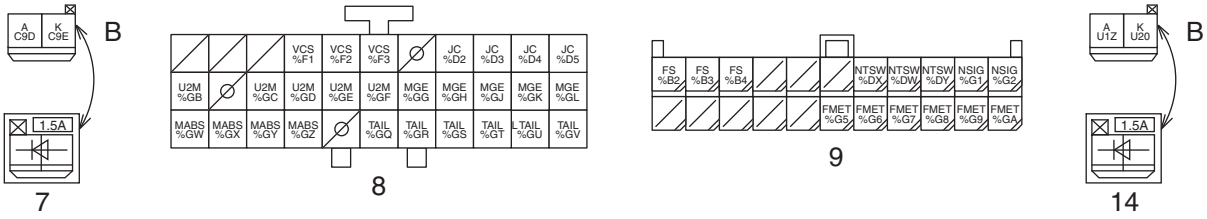


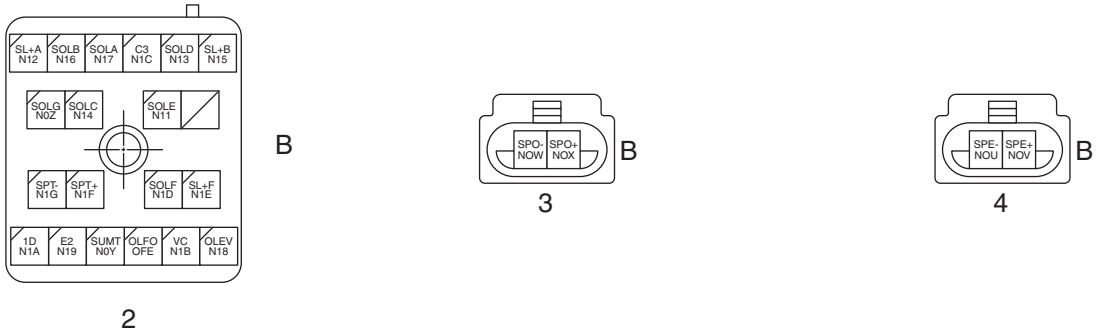


SAPH12Z080200132

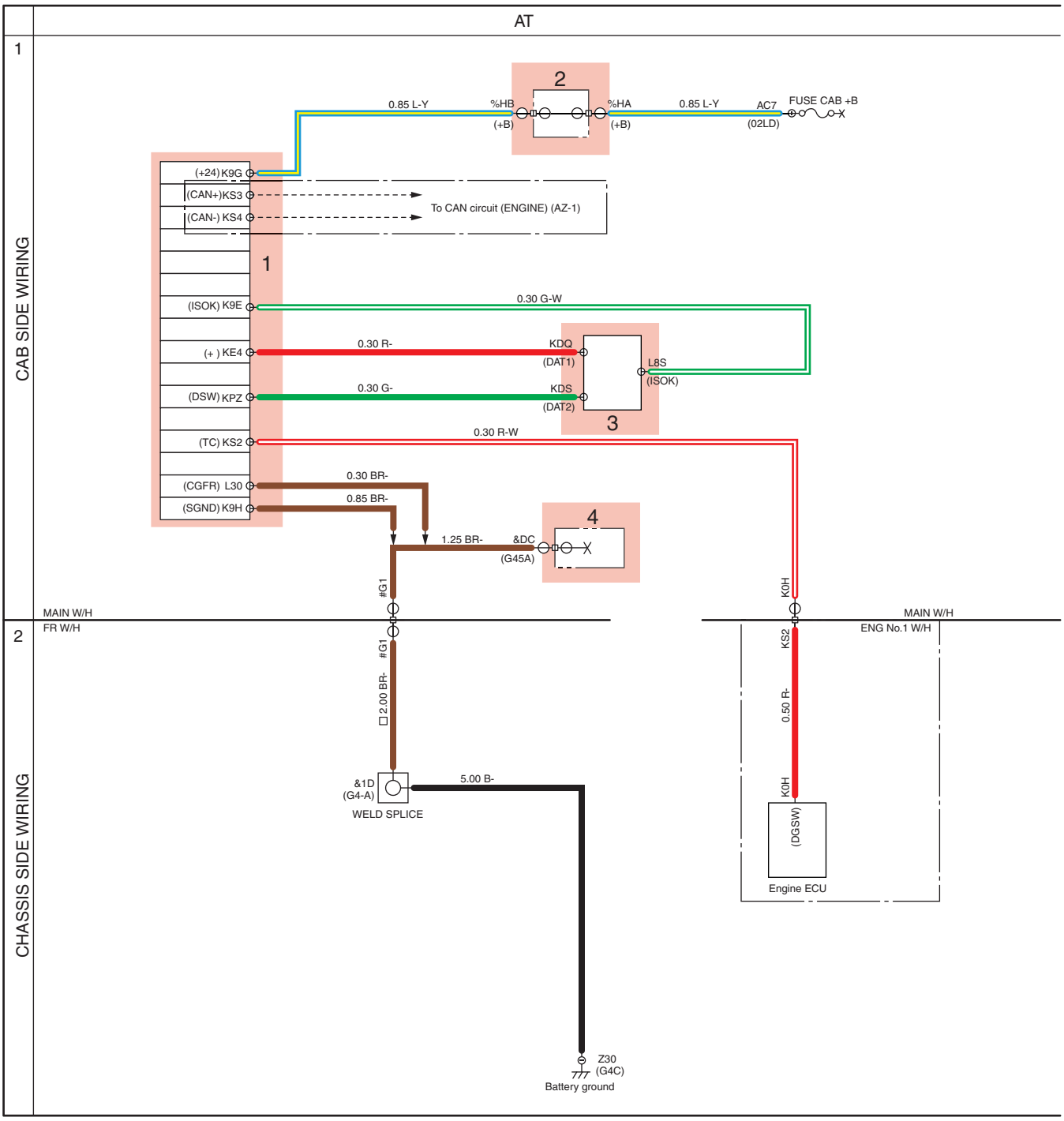


SAPH12Z080200133

**AT DLC CONNECTOR CIRCUIT (16P)**

**1 DLC connector (16P)**

**2 Common rail J/C No.2**

**3 Vehicle control ECU**

**4 J/C ground**

AT

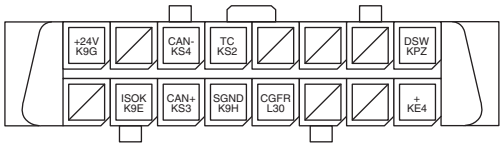


1

B

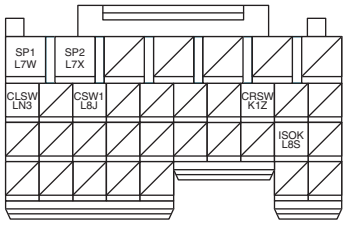


3-1

B

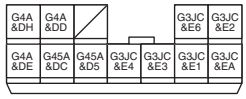


4

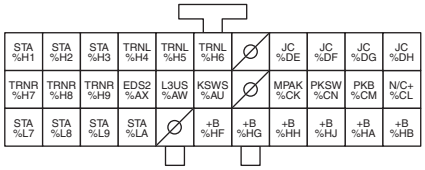


2

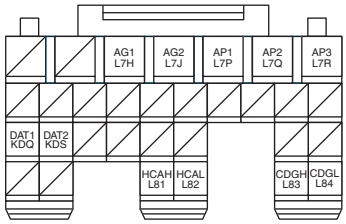


3-2

SAPH12Z080200134

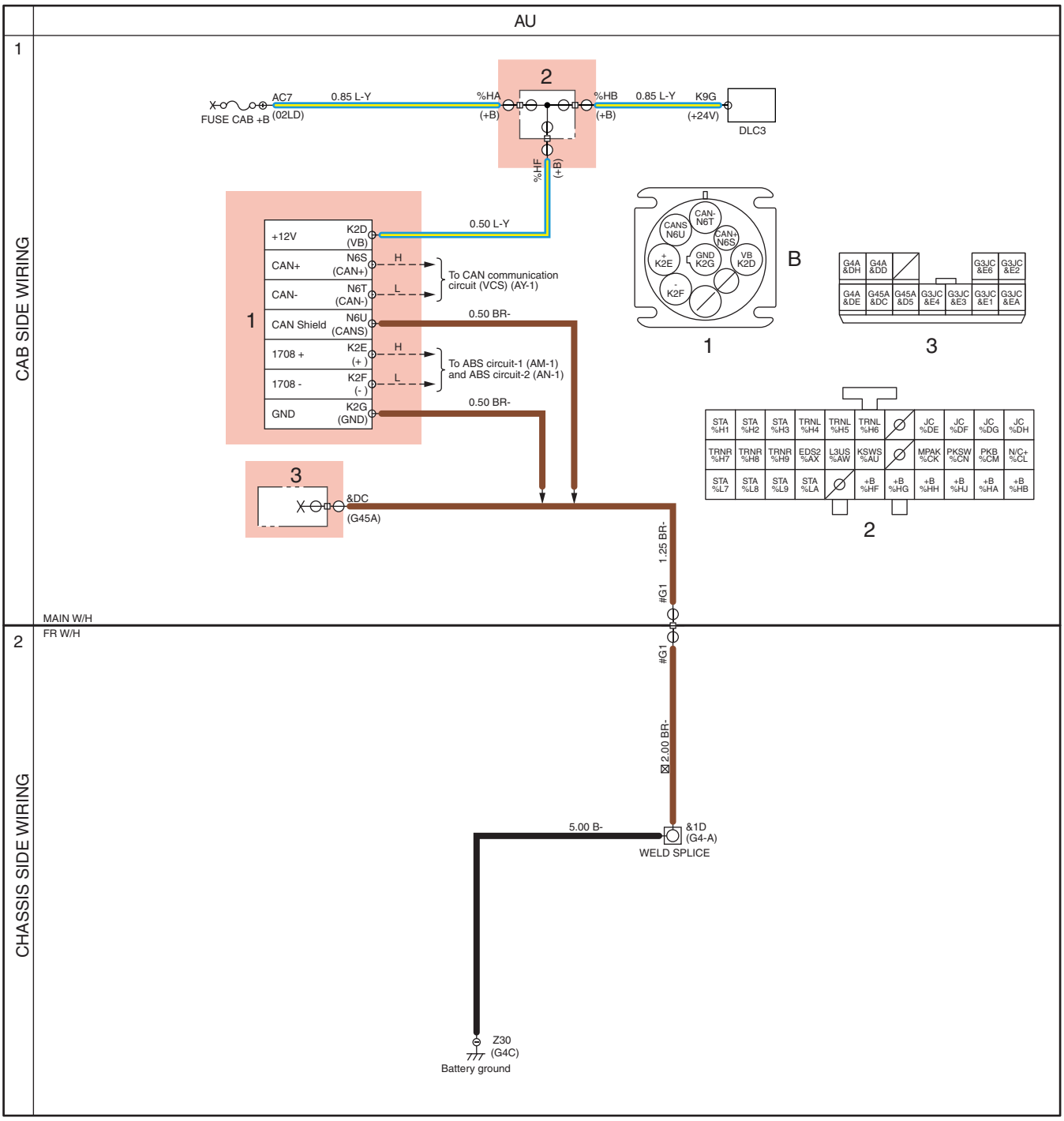


SAPH12Z080200135

**AU DIAGNOSIS CONNECTOR CIRCUIT (9P)**

**1 Diagnosis connector (9P)**

**2 Common rail J/C No.2**

**3 J/C ground**

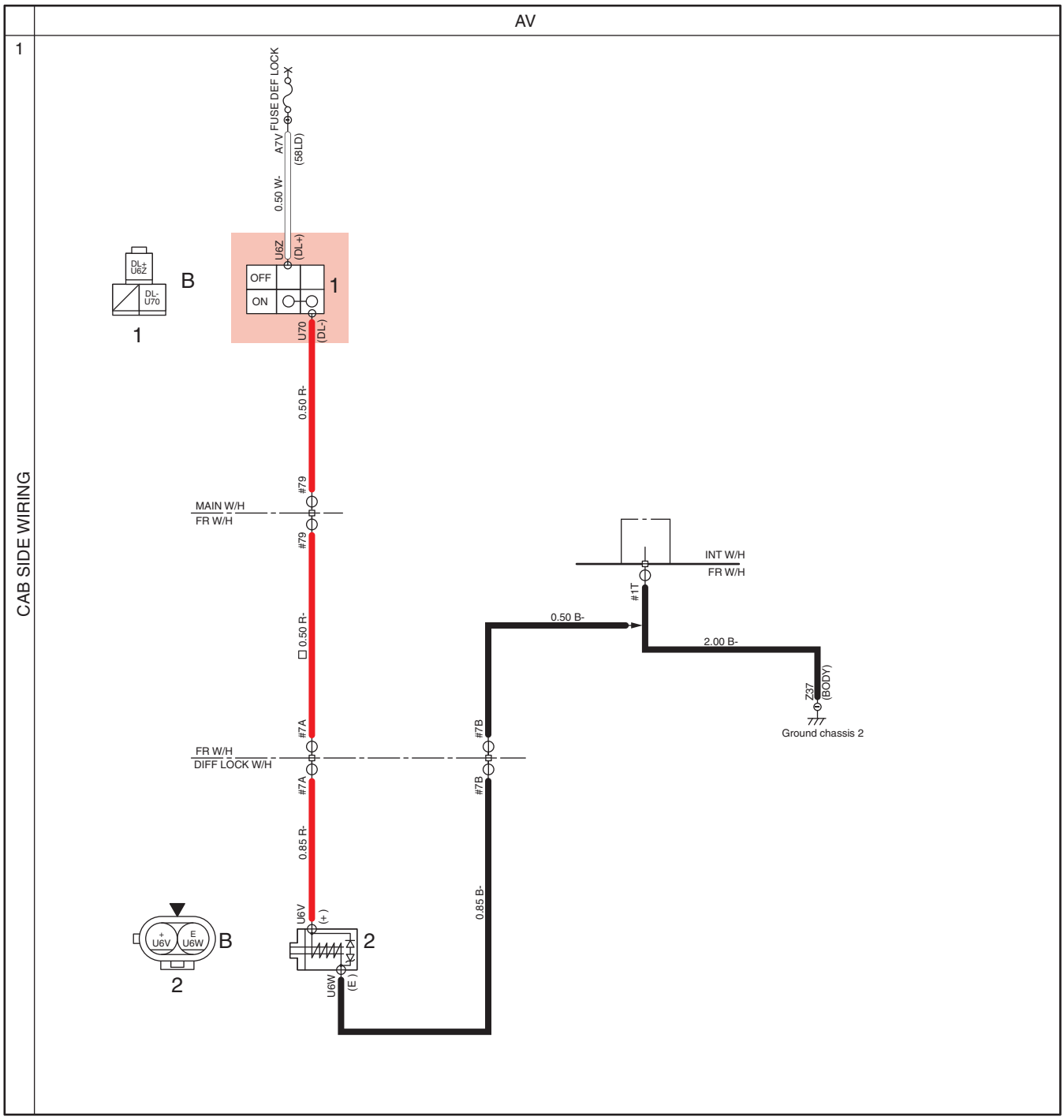


SAPH12Z080200136

**AV MANUAL DIFFERENTIAL LOCK CIRCUIT**

**1 Differential lock switch**

**2 Manual differential lock magnetic valve**

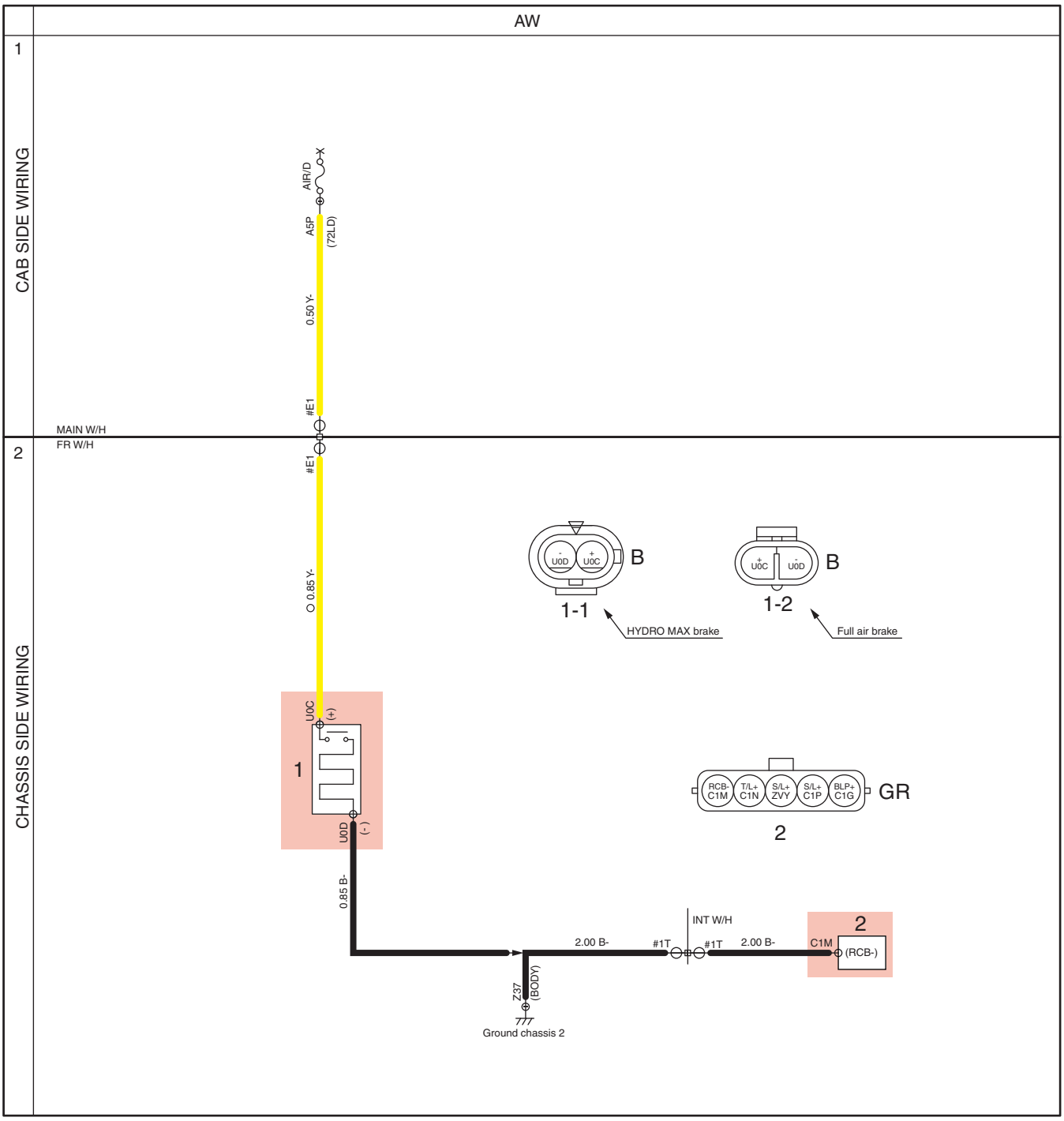


SAPH12Z080200137

**AW AIR DRYER CIRCUIT**

**1 Air dryer**

**2 Rear combination light LH**

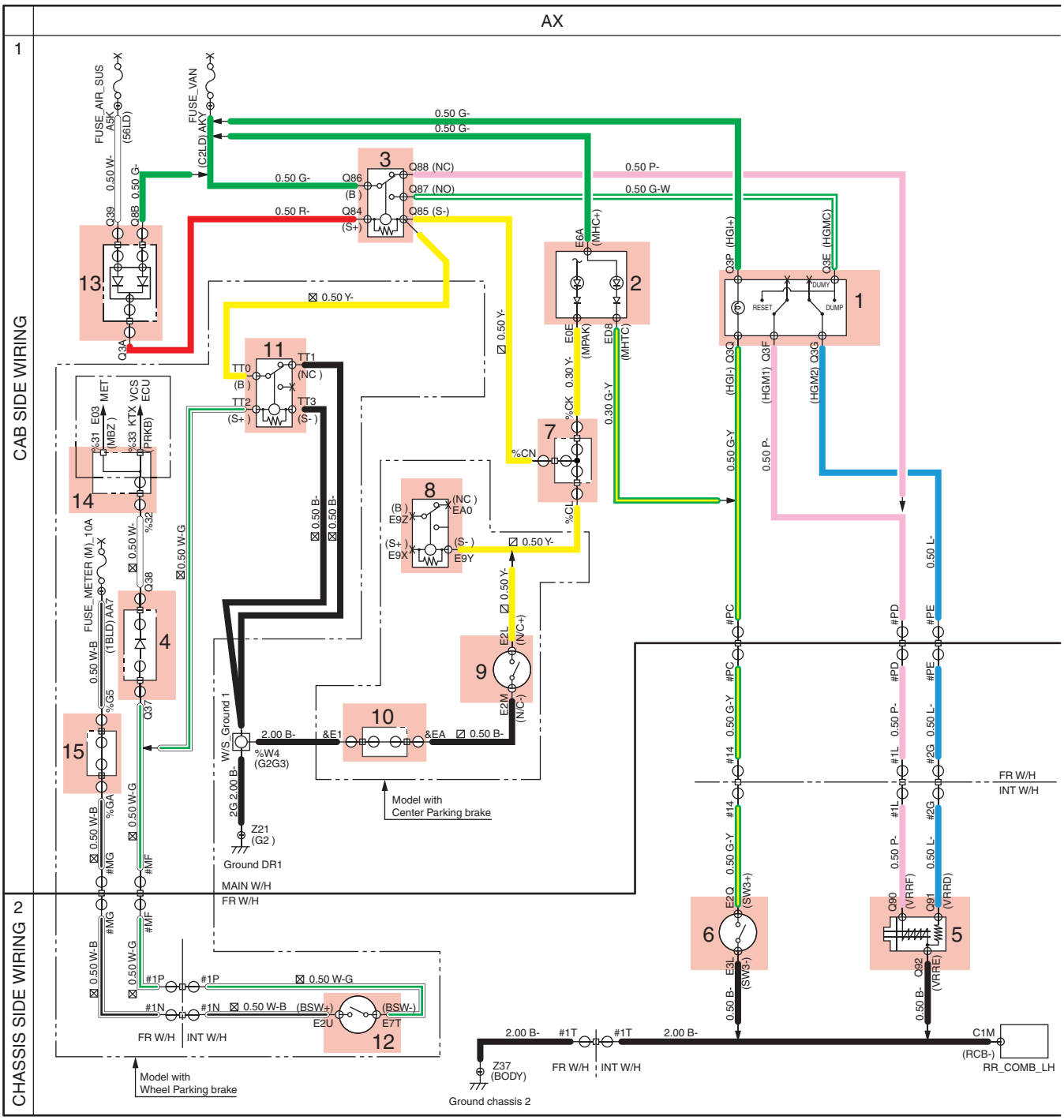


SAPH12Z080200138

**AX AIR SUSPENSION DUMP CIRCUIT**

1 Air suspension dump switch
2 Combination meter (24P)
3 Air suspension dump relay No.3
4 Air suspension dump diode No.1
5 Air suspension dump magnetic valve
6 Low pressure switch No.3
7 Common rail J/C No.2
8 Parking brake buzzer off relay
9 Parking brake switch
10 J/C ground
11 Air suspension dump relay No.4
12 Buzzer off switch
13 Air suspension dump diode No.2
14 Parking brake 4P J/C
15 J/C signal

AX

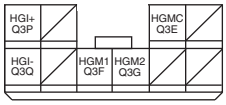


1

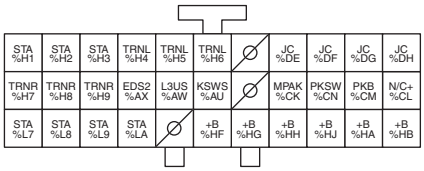


7

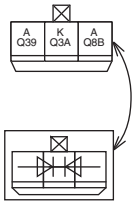


13

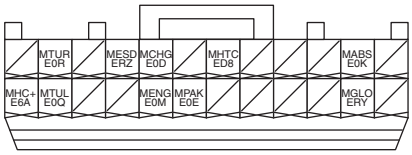


B

2

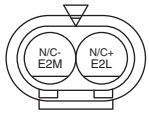


B

9

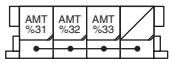


14

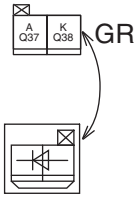


4

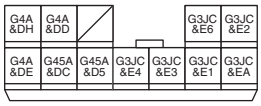


10

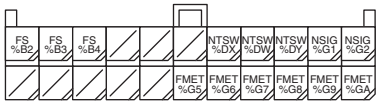


15




B

5

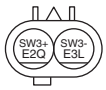


B

6




B

12

SAPH12Z080200139

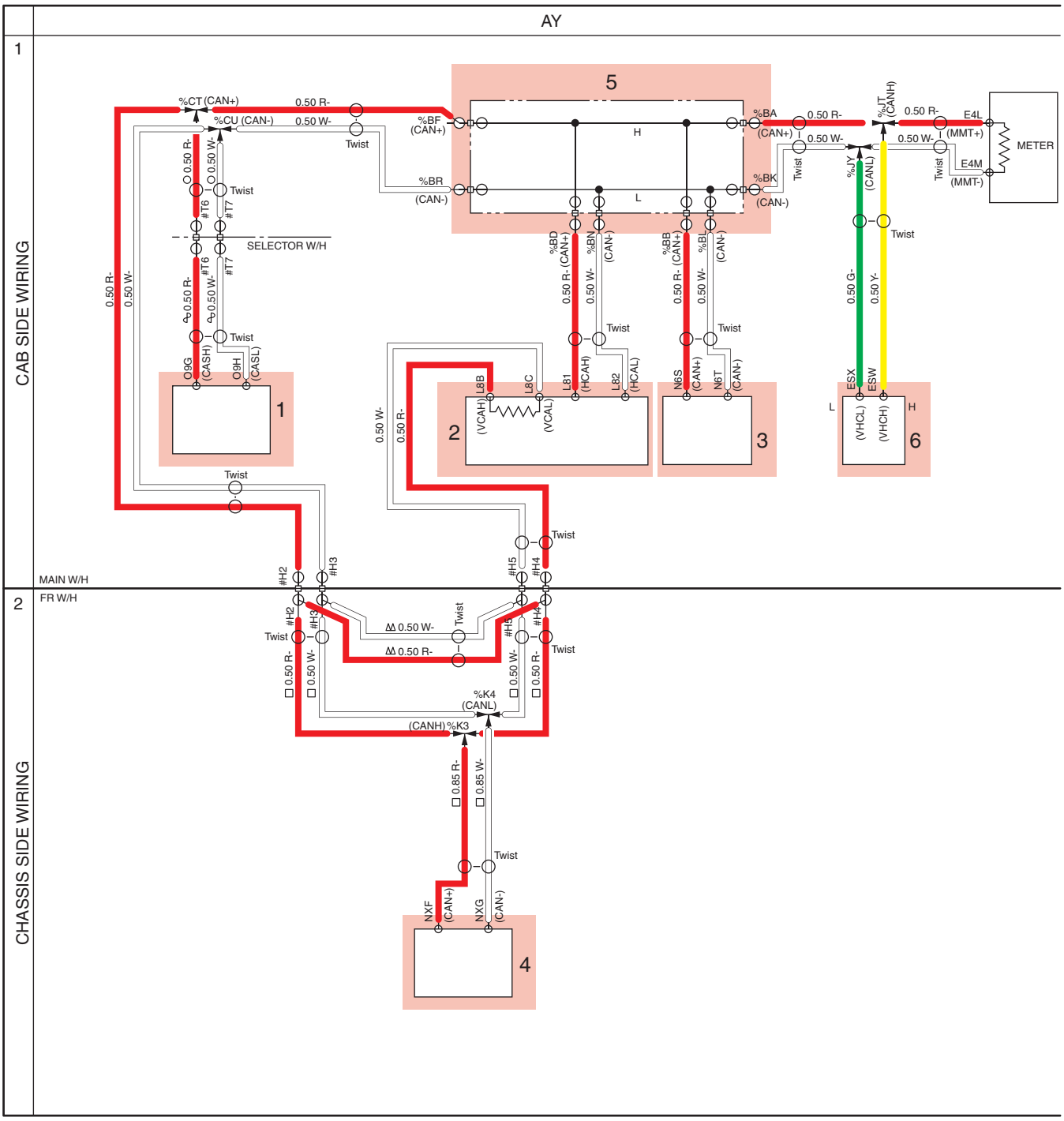


SAPH12Z080200140

**AY CAN (CONTROLLER AREA NETWORK) COMMUNICATION CIRCUIT (VCS)**

**1 Selector**

**2 Vehicle control ECU**

**3 Diagnosis connector (9P)**

**4 TRANS ECU**

**5 CAN J/C**

**6 Telematics unit**

AY

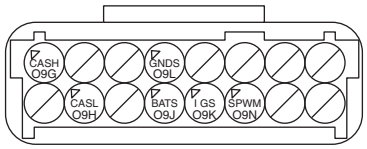


GR

1

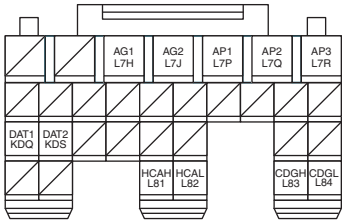


2-2

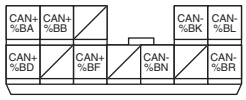


5

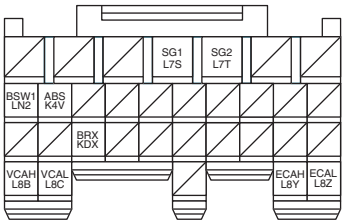


B

2-1

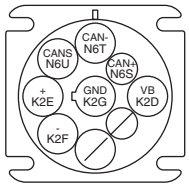


B

3

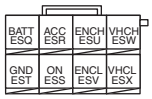


L

6

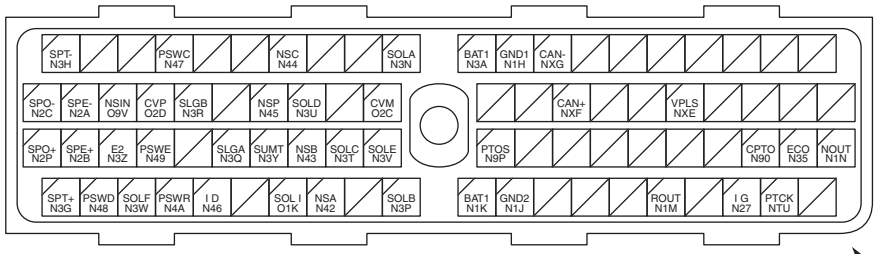


B

4-1

ALLISON 2000 TRANS

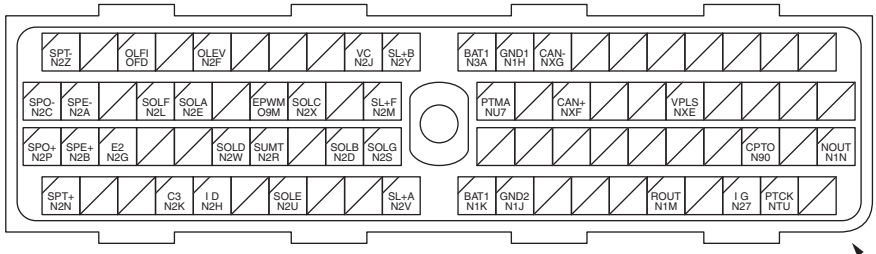


B

4-2

ALLISON 3000RDS TRANS

SAPH12Z080200141

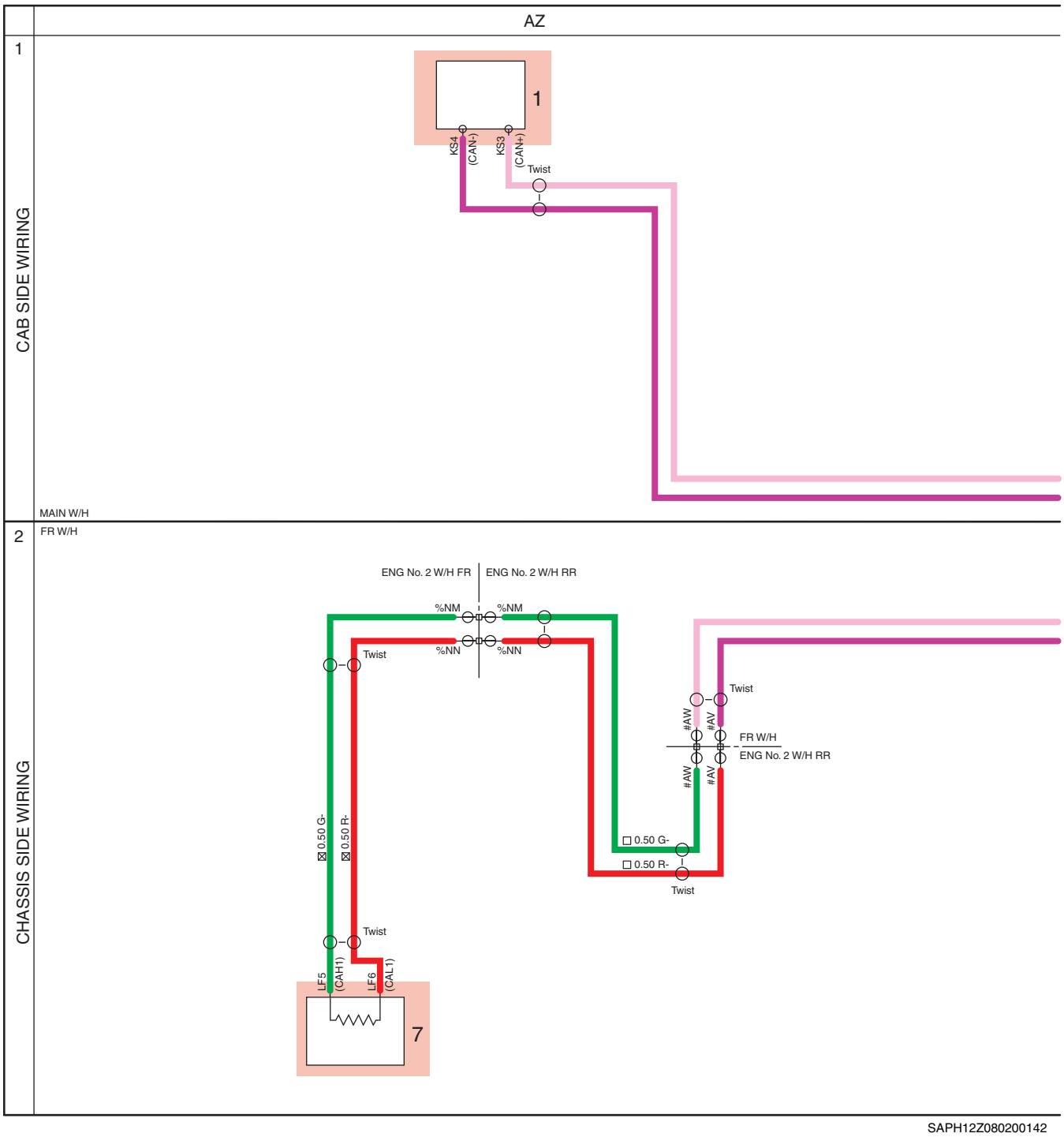


SAPH12Z080200142

**AZ CAN (CONTROLLER AREA NETWORK) COMMUNICATION CIRCUIT (ENGINE)**

| | | | |
|---|---|---|---|
| **1** | **Diagnosis connector (16P)** | **7** | **DCU 53P** |
| **2** | **Vehicle control ECU** | **8** | **Engine ECU** |
| **3** | **CAN J/C 2 High** | **9** | **V J/C** |
| **4** | **CAN J/C 2 Low** | **10** | **Telematics unit** |
| **5** | **CAN J/C 3 High** | | |
| **6** | **CAN J/C 3 Low** | | |

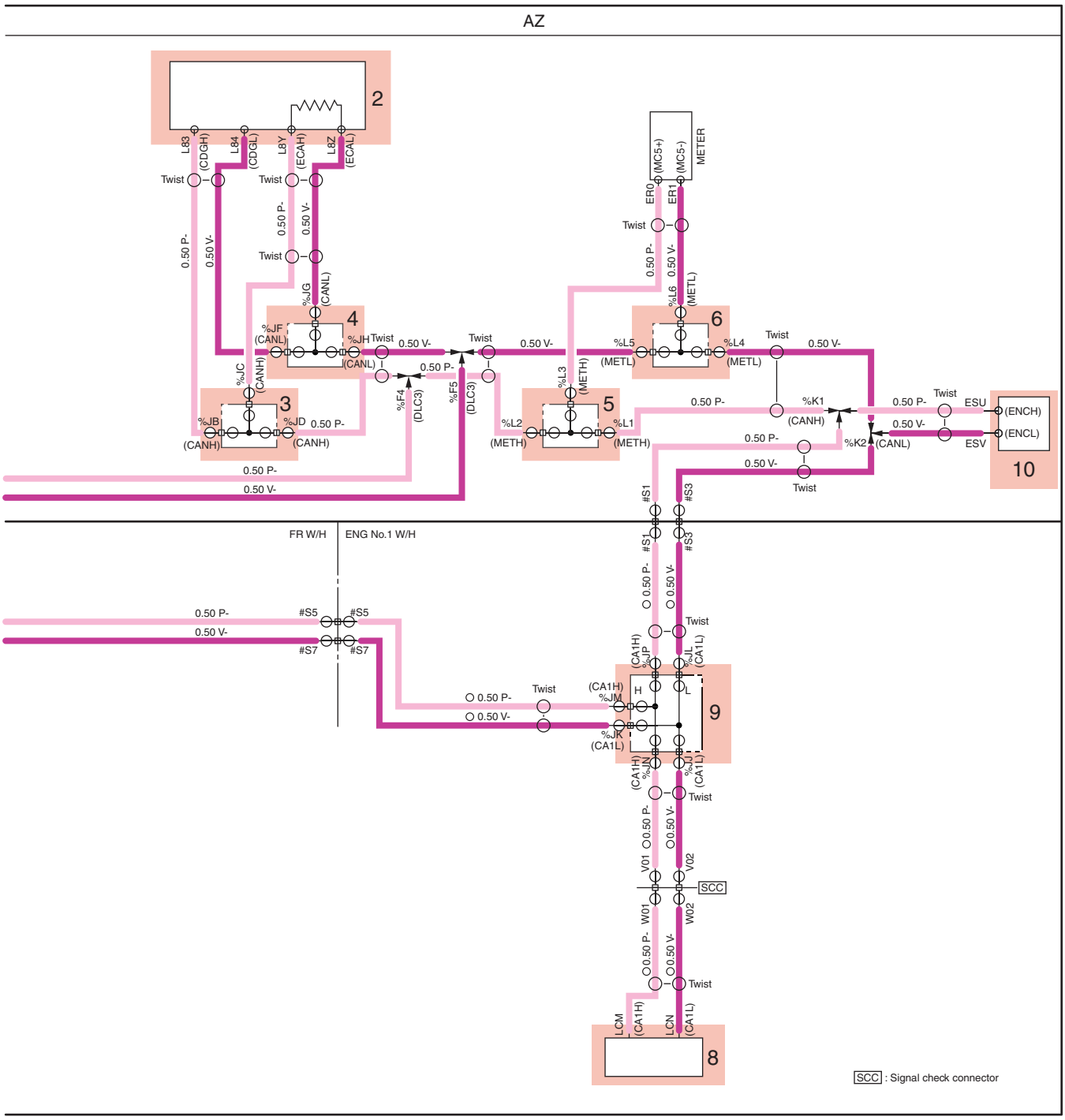


SAPH12Z080200143

AZ

1 CAB SIDE WIRING

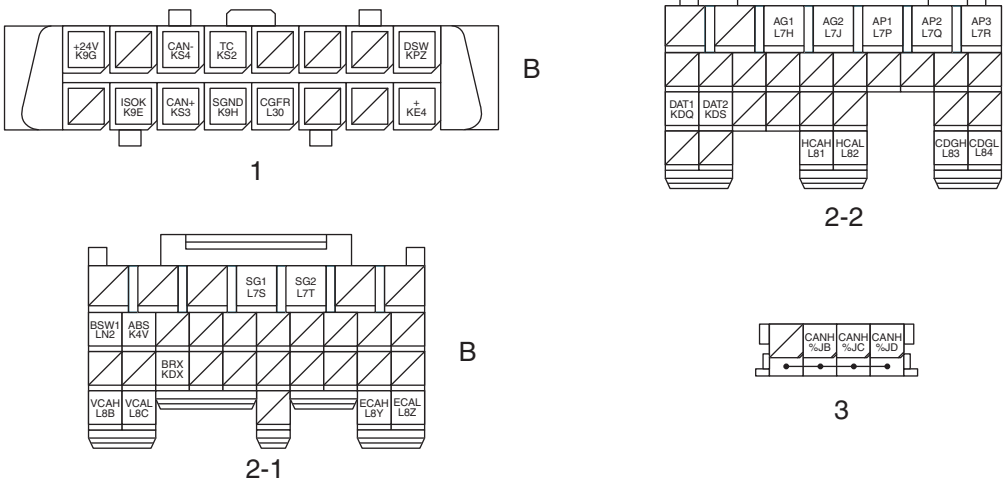


2 CHASSIS SIDE WIRING

SAPH12Z080200144

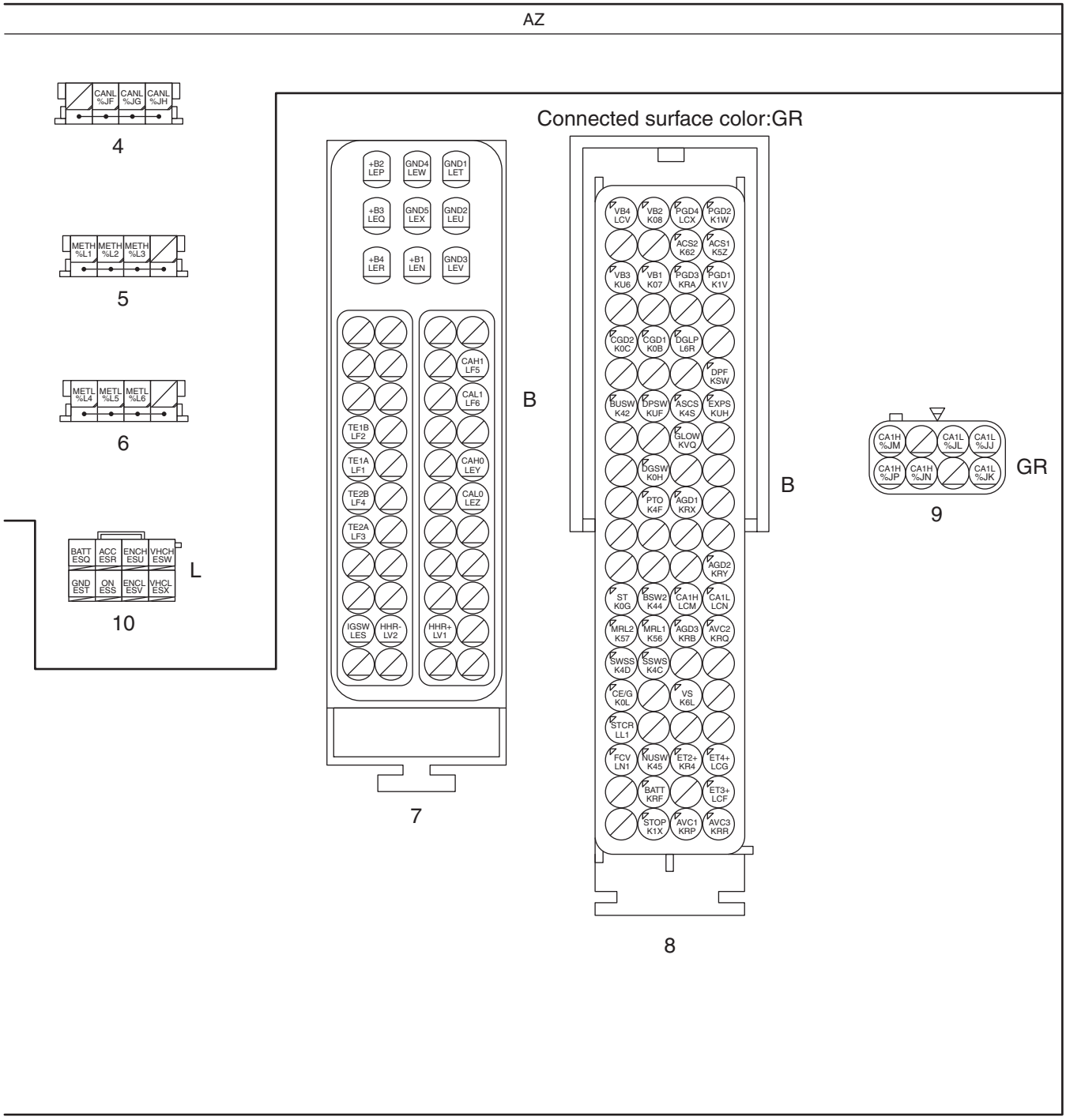


SAPH12Z080200145

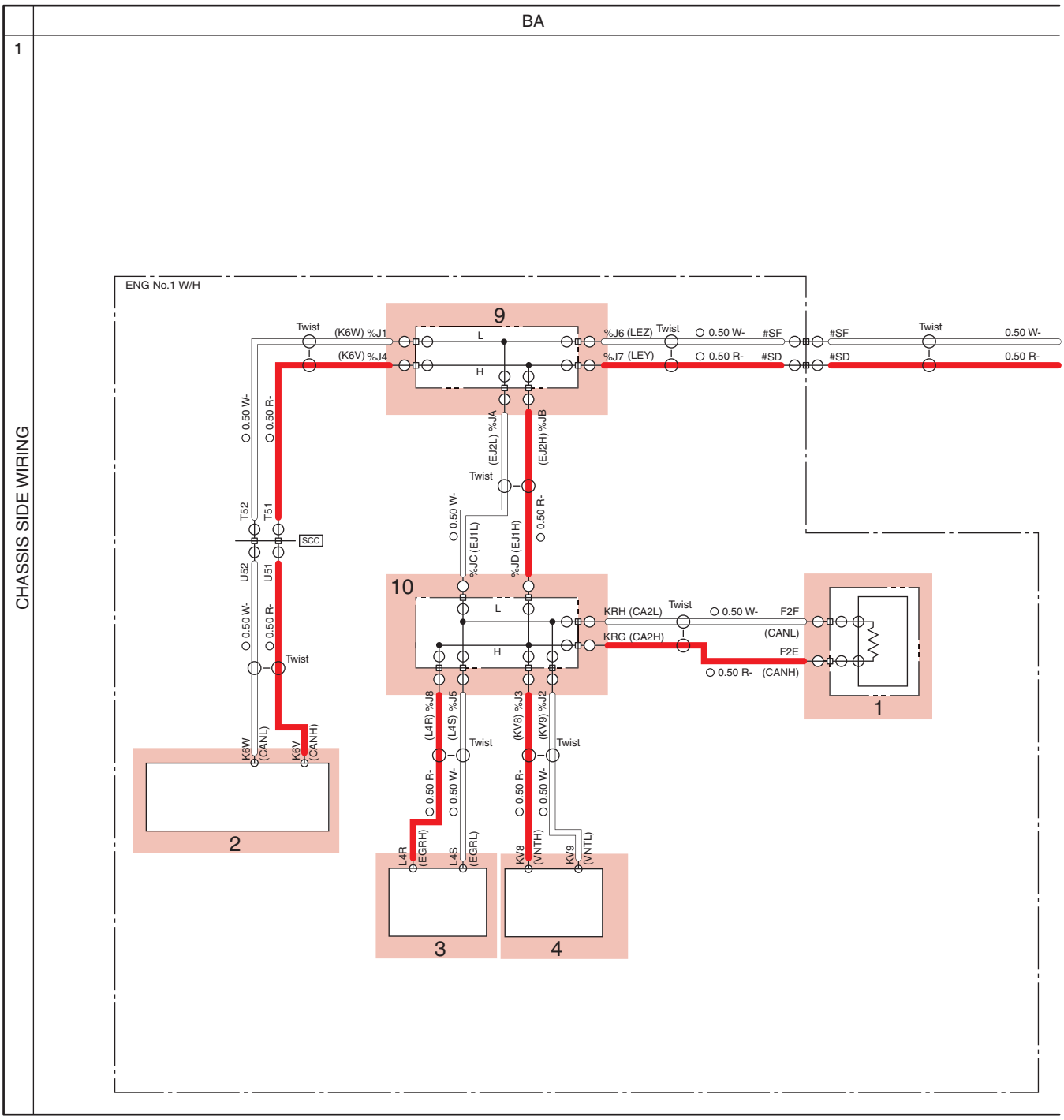


SAPH12Z080200146

**BA CAN (CONTROLLER AREA NETWORK) COMMUNICATION CIRCUIT (DPR)**

| | | | |
|---|---|---|---|
| 1 | CAN TMN 5 | 8 | Common rail CAN J/C No.1 |
| 2 | Engine ECU | 9 | Common rail CAN J/C No.2 |
| 3 | EGR valve | 10 | Common rail CAN J/C No.3 |
| 4 | VNT controller | 11 | Common rail CAN J/C No.4 |
| 5 | NOx sensor 1 | 12 | DEF sensor |
| 6 | NOx sensor 2 | 13 | PM sensor |
| 7 | DCU 53P | | |

BA

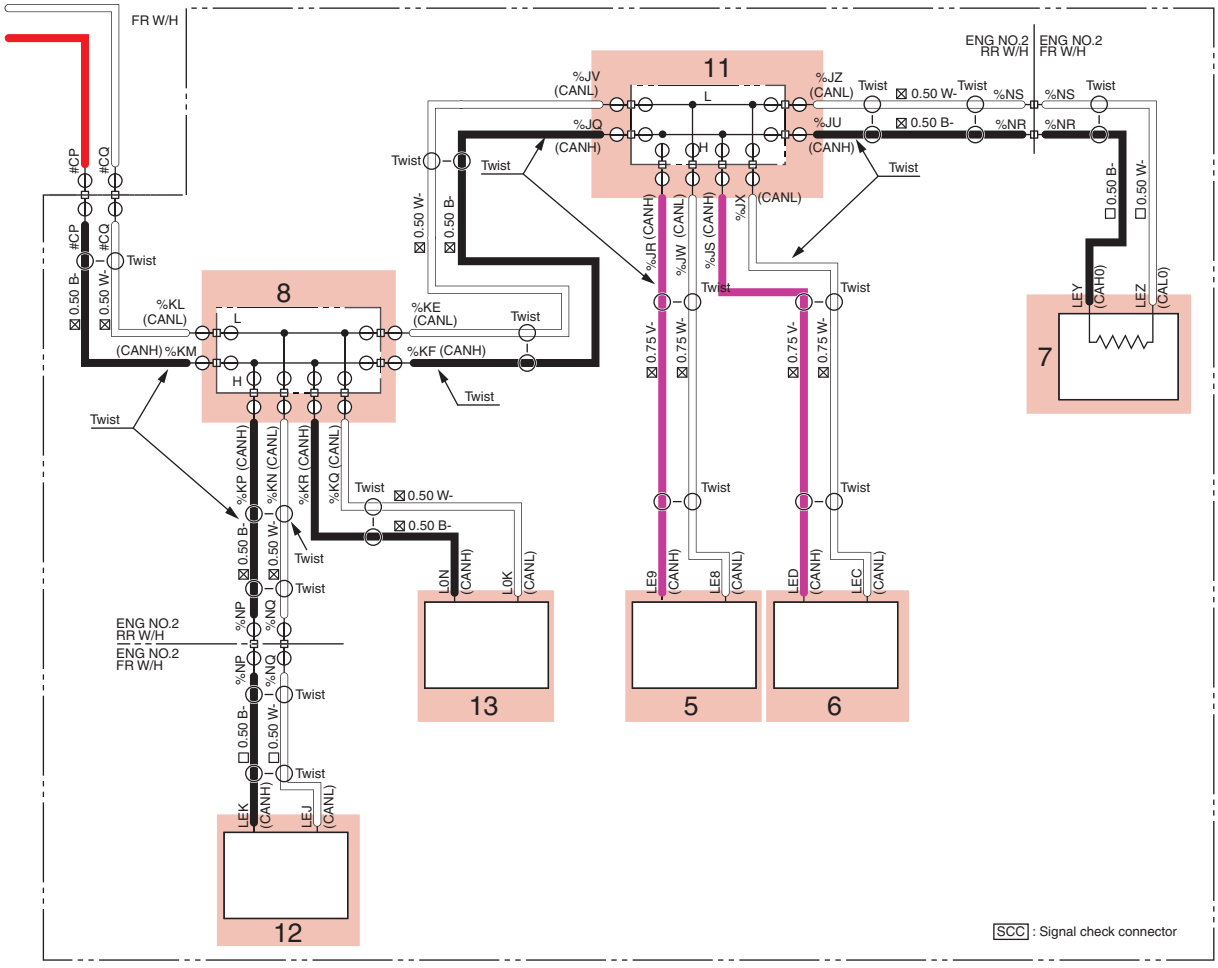


SAPH12Z080200147

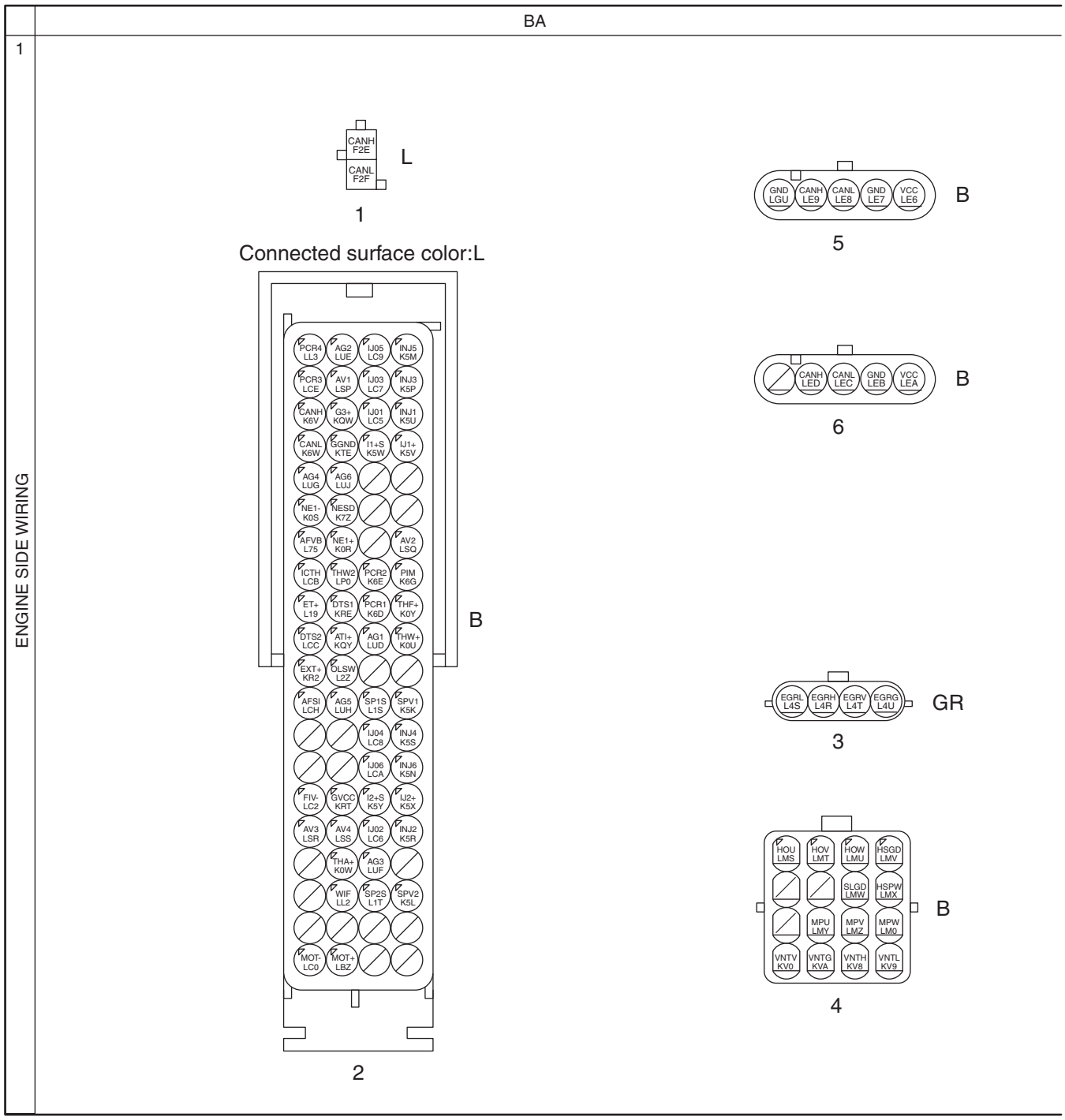


SAPH12Z080200148

BA

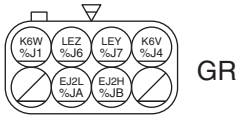


GR

9

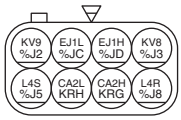


GR

10

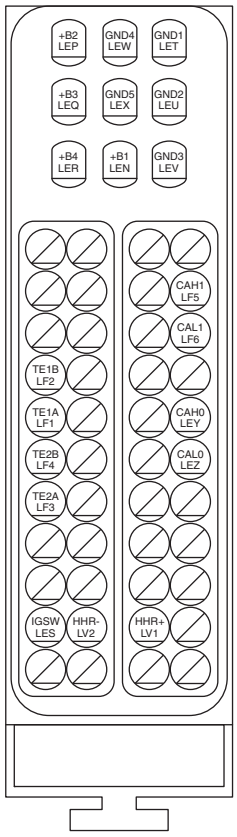


B

7

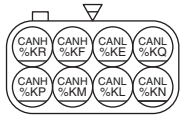


GR

8

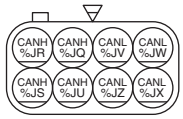


GR

11

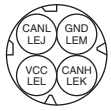


B

12

Connected surface color: GR

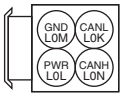


B

13

SAPH12Z080200149

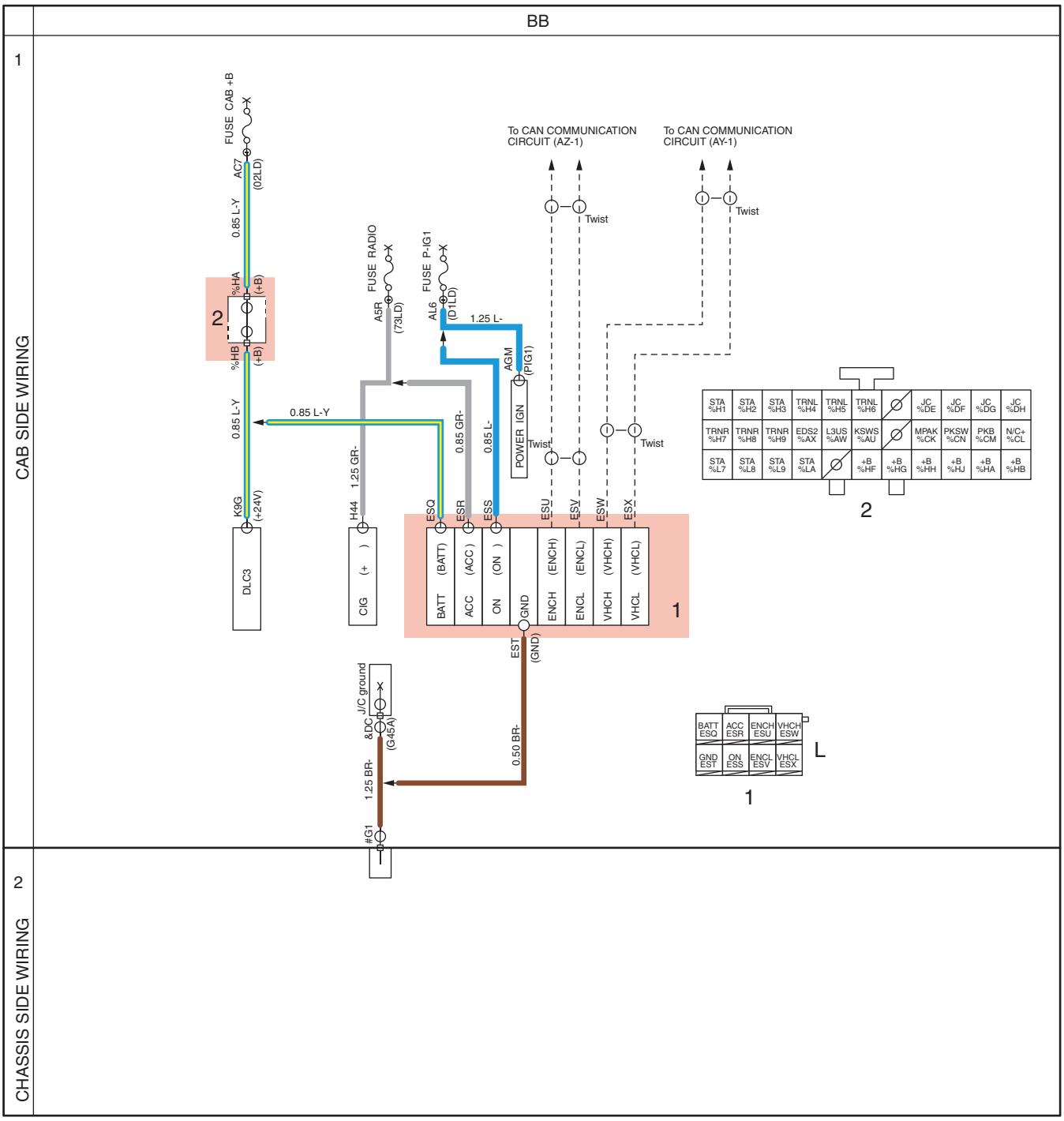


SAPH12Z080200150

**BB TELEMATICS CIRCUIT**

**1 Telematics unit**

**2 Common rail J/C No.2**

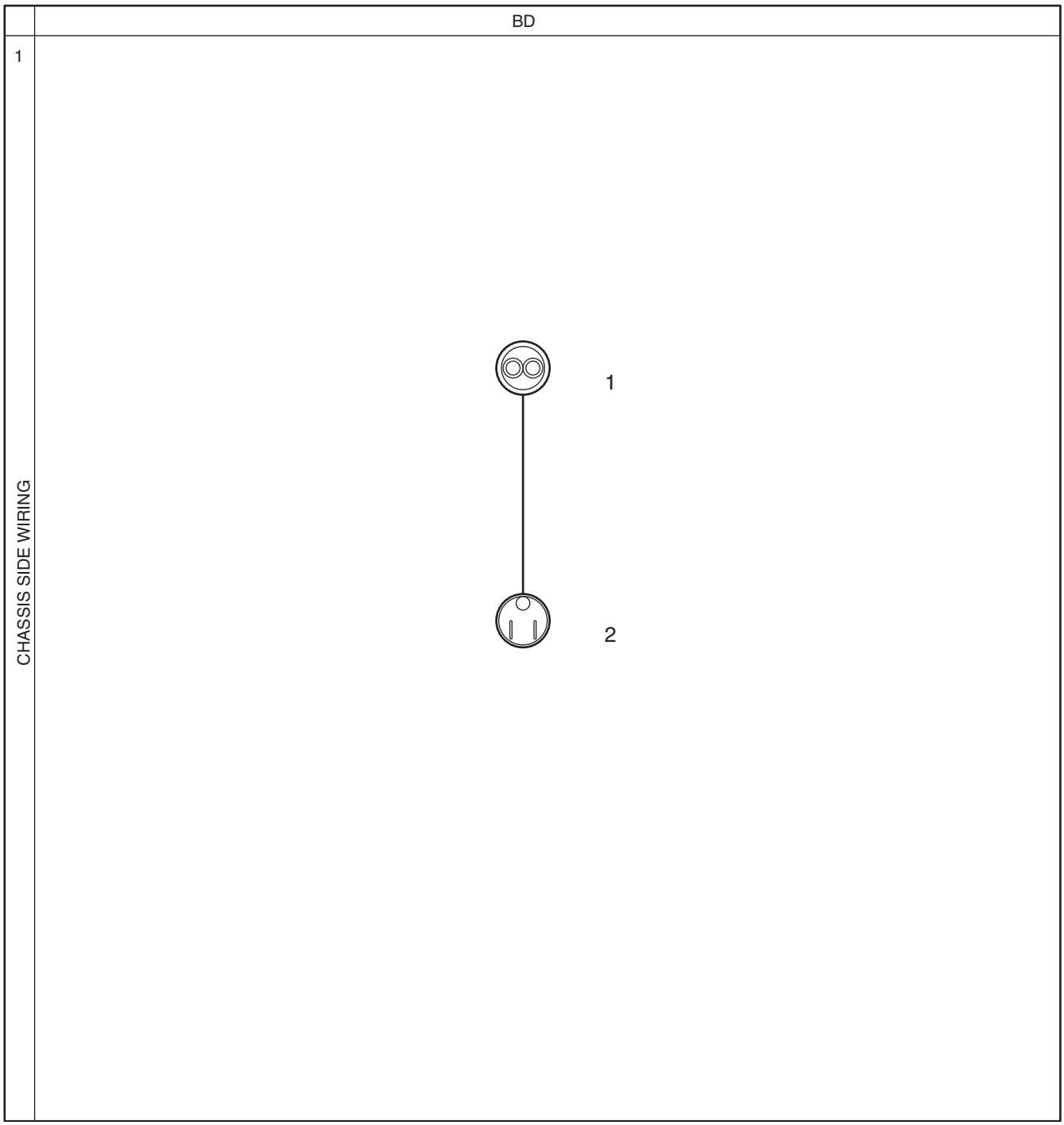


SAPH12Z080200151

**BD BLOCK HEATER CIRCUIT**

**1 Plug heater**

**2 Outlet cord**

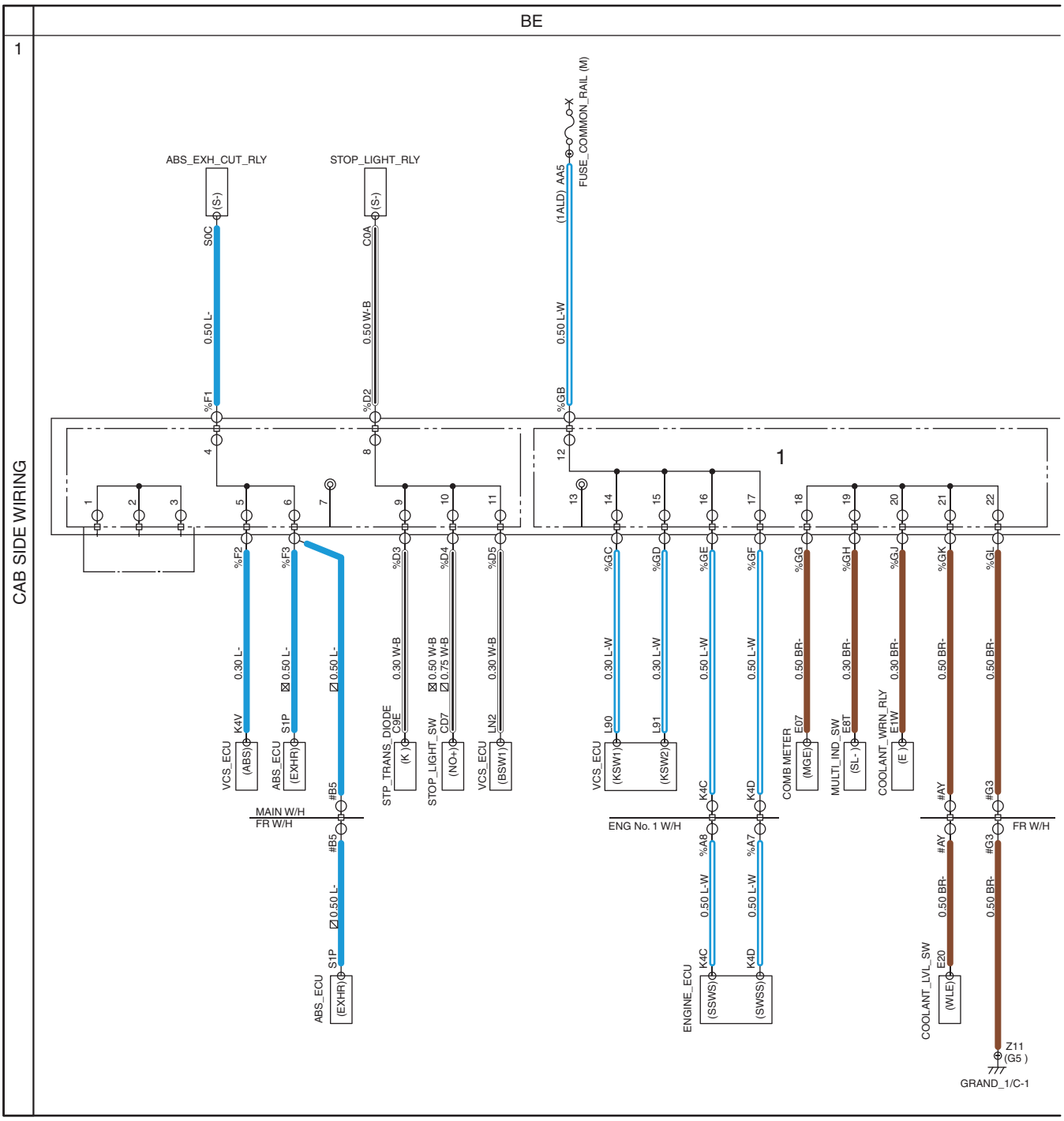


SAPH12Z080200152

**BE ENGINE JUNCTION CIRCUIT -1**

**1 Common rail J/C No.1**

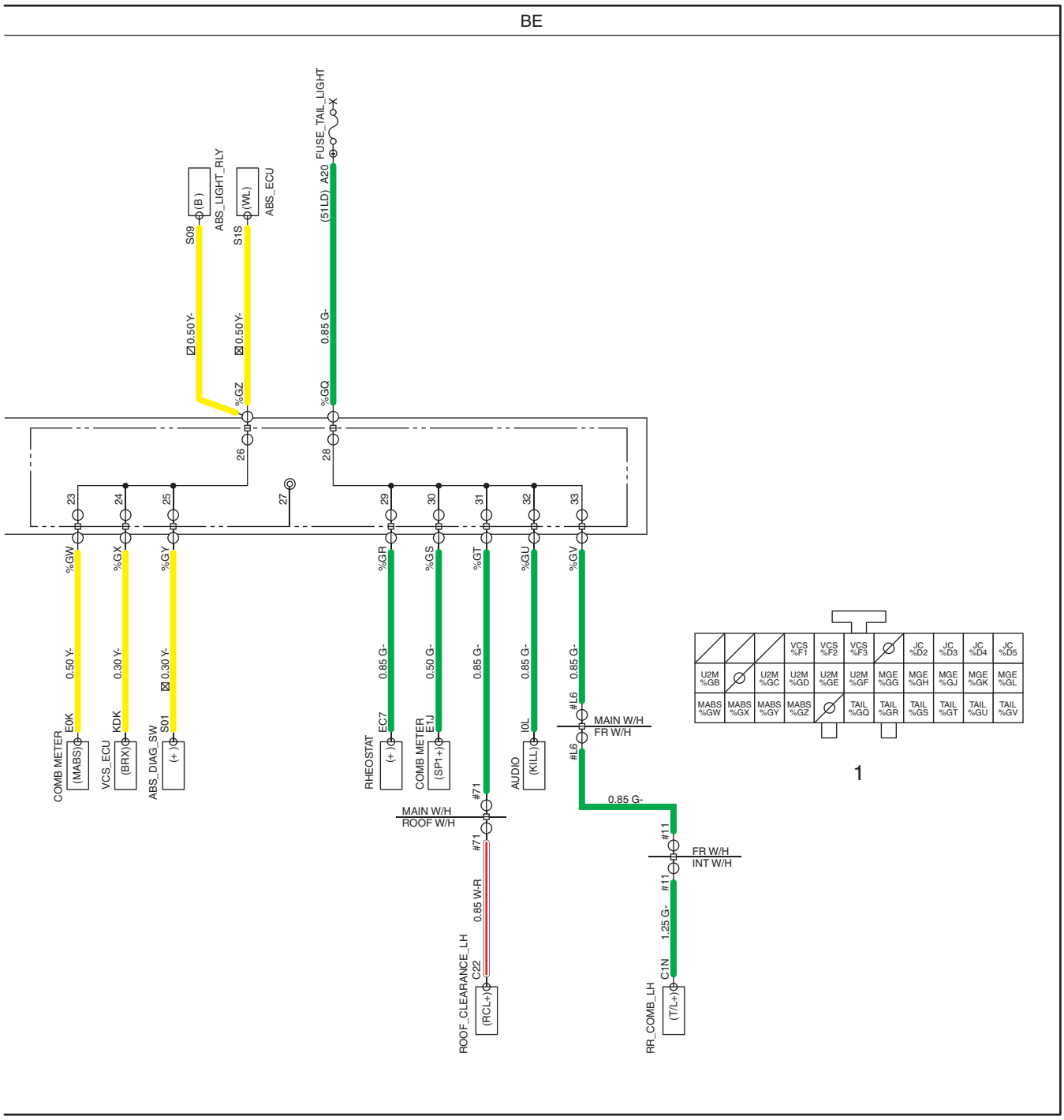


SAPH12Z080200153

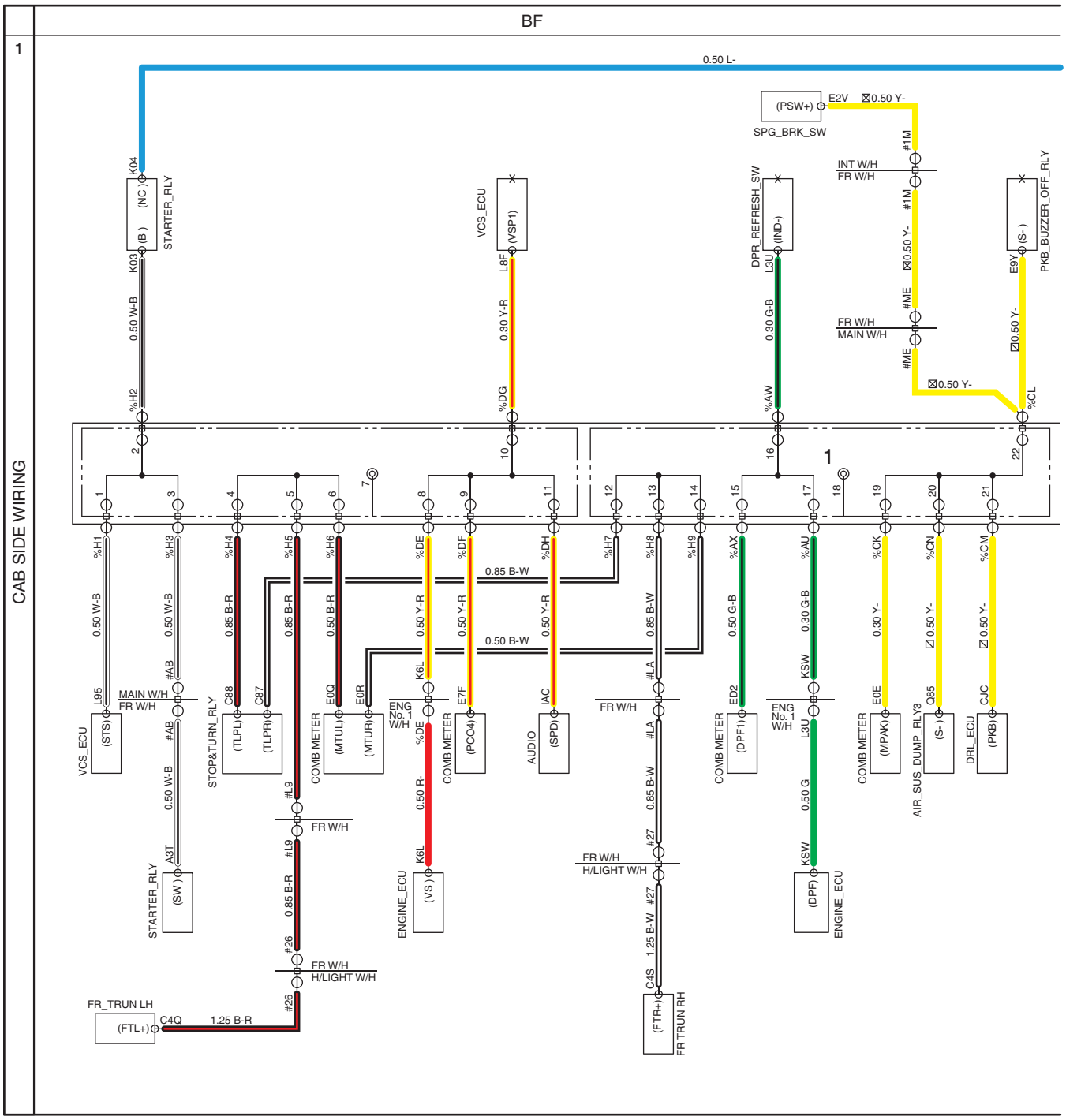


SAPH12Z080200154

**BF ENGINE ECU JUNCTION CIRCUIT -2**

**1 Common rail J/C No.2**

BF

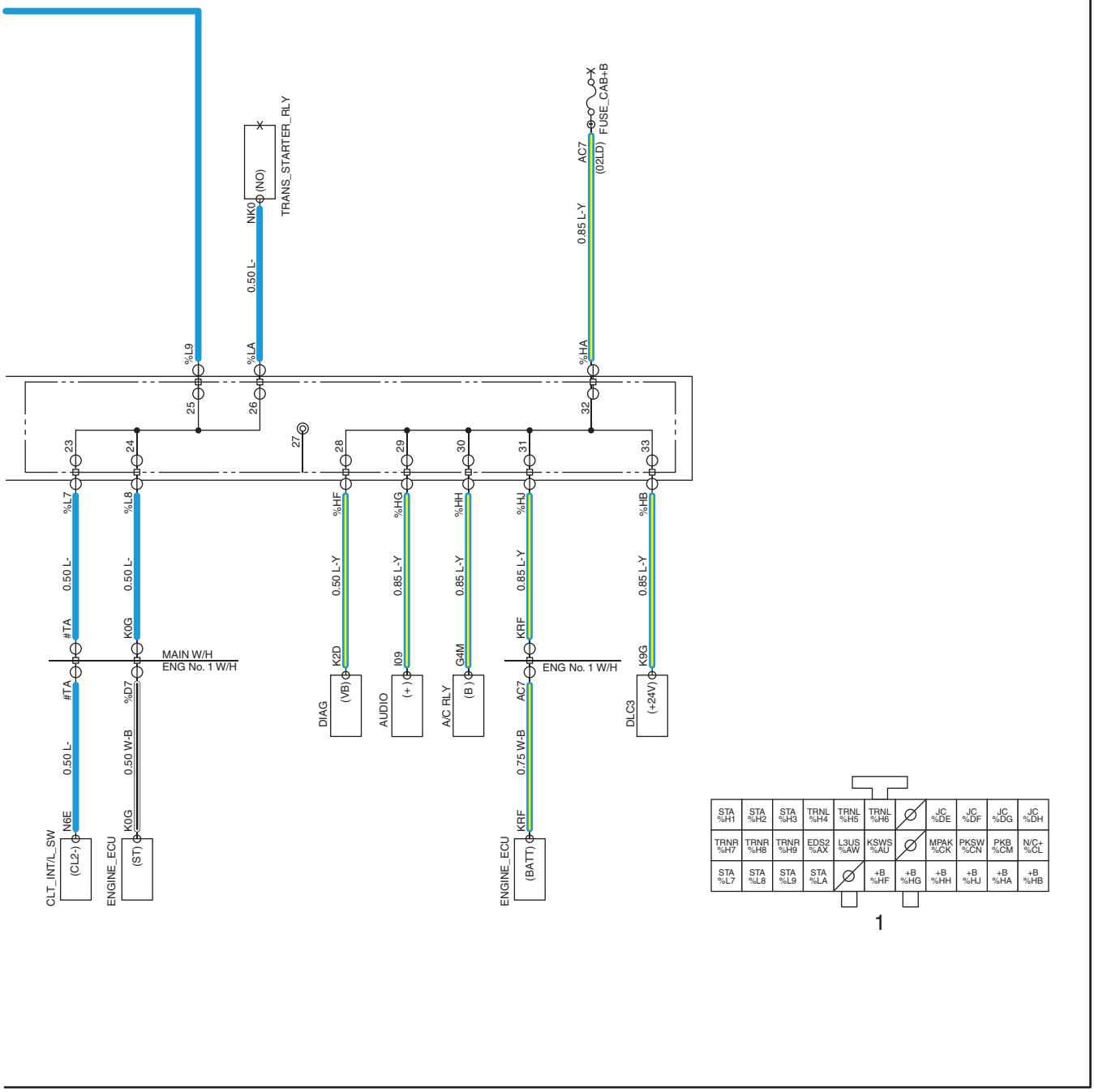


SAPH12Z080200155

BG

CAB SIDE WIRING

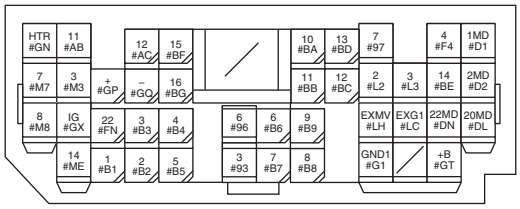


1

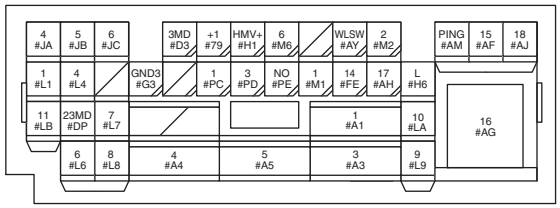


2

CHASSIS SIDE WIRING

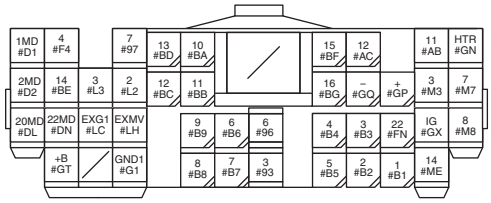


1

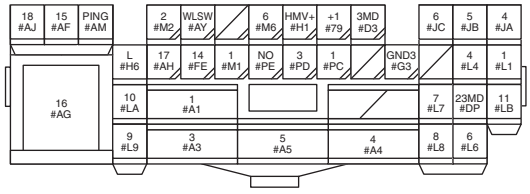


2

SAPH12Z080200156

**BG WIRE TO WIRE CONNECTOR (IN THE BULK HEAD CONNECTOR BOX)**

**1 Cab main harness to chassis front harness STD 1 2 Cab main harness to chassis front harness STD 2**

BG

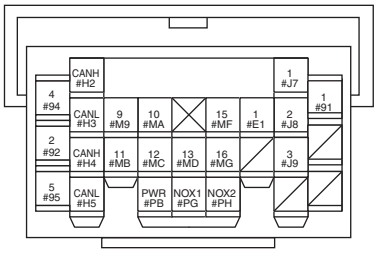


3

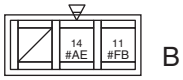


4

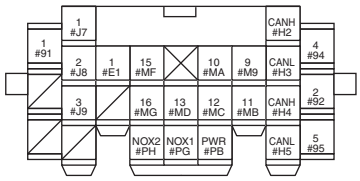


3

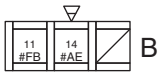


4

SAPH12Z080200157

**3 Cab main harness to chassis front harness OPT 1** **4 Cab main harness to chassis front harness PWR**

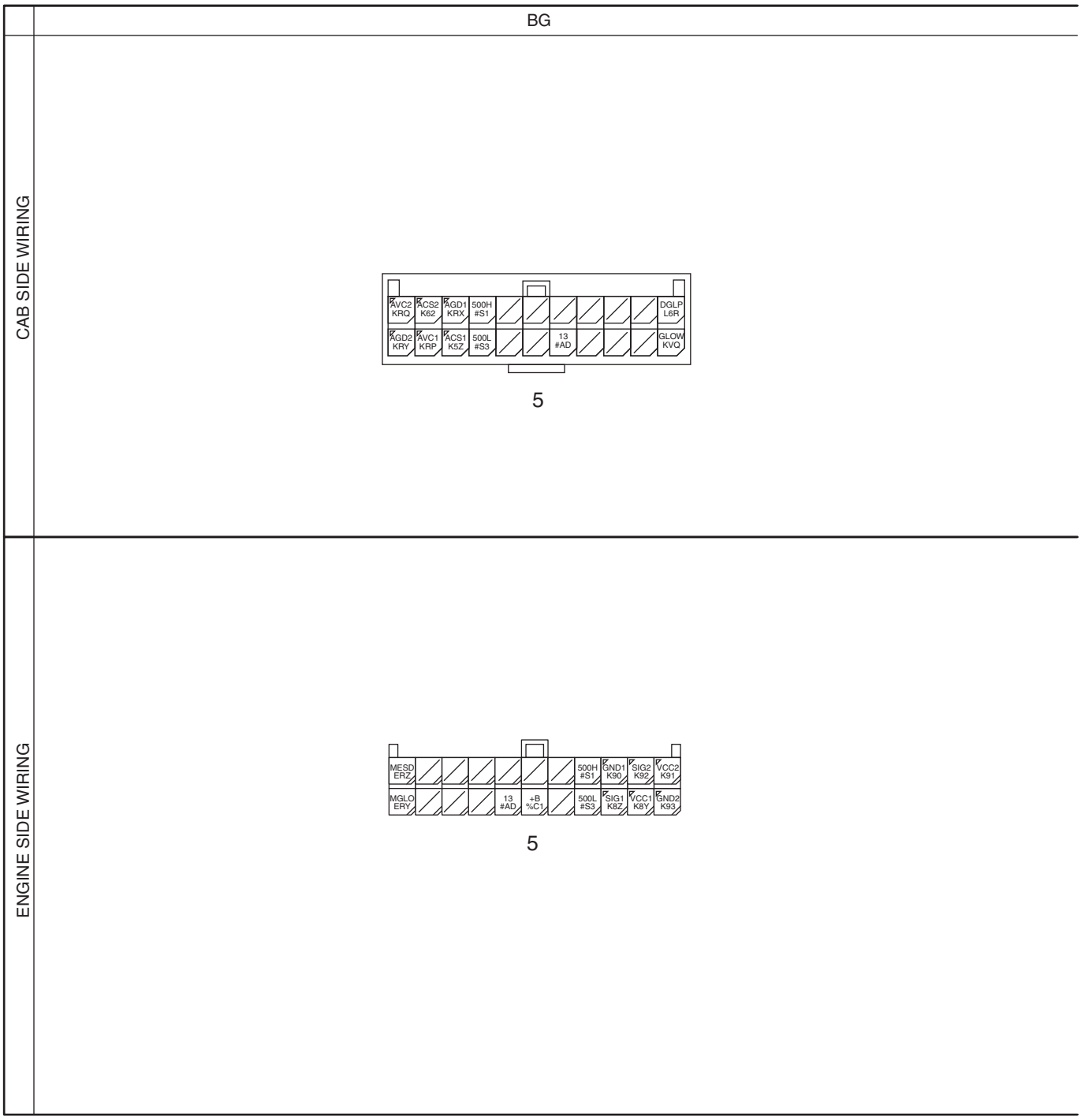


SAPH12Z080200158

**5 Cab main harness to engine No.1 harness 22P**

BG

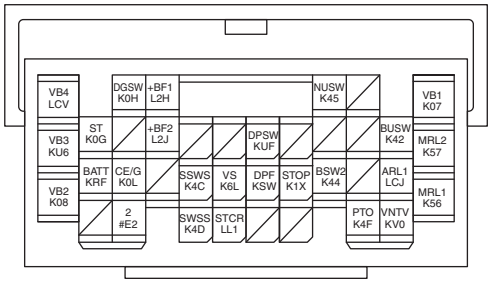


6

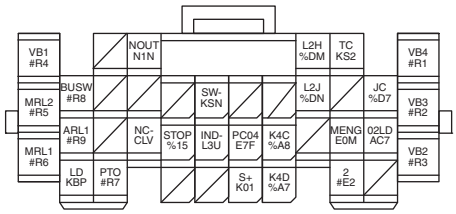


6

SAPH12Z080200159

**6 Cab main harness to engine No.1 harness 38P**

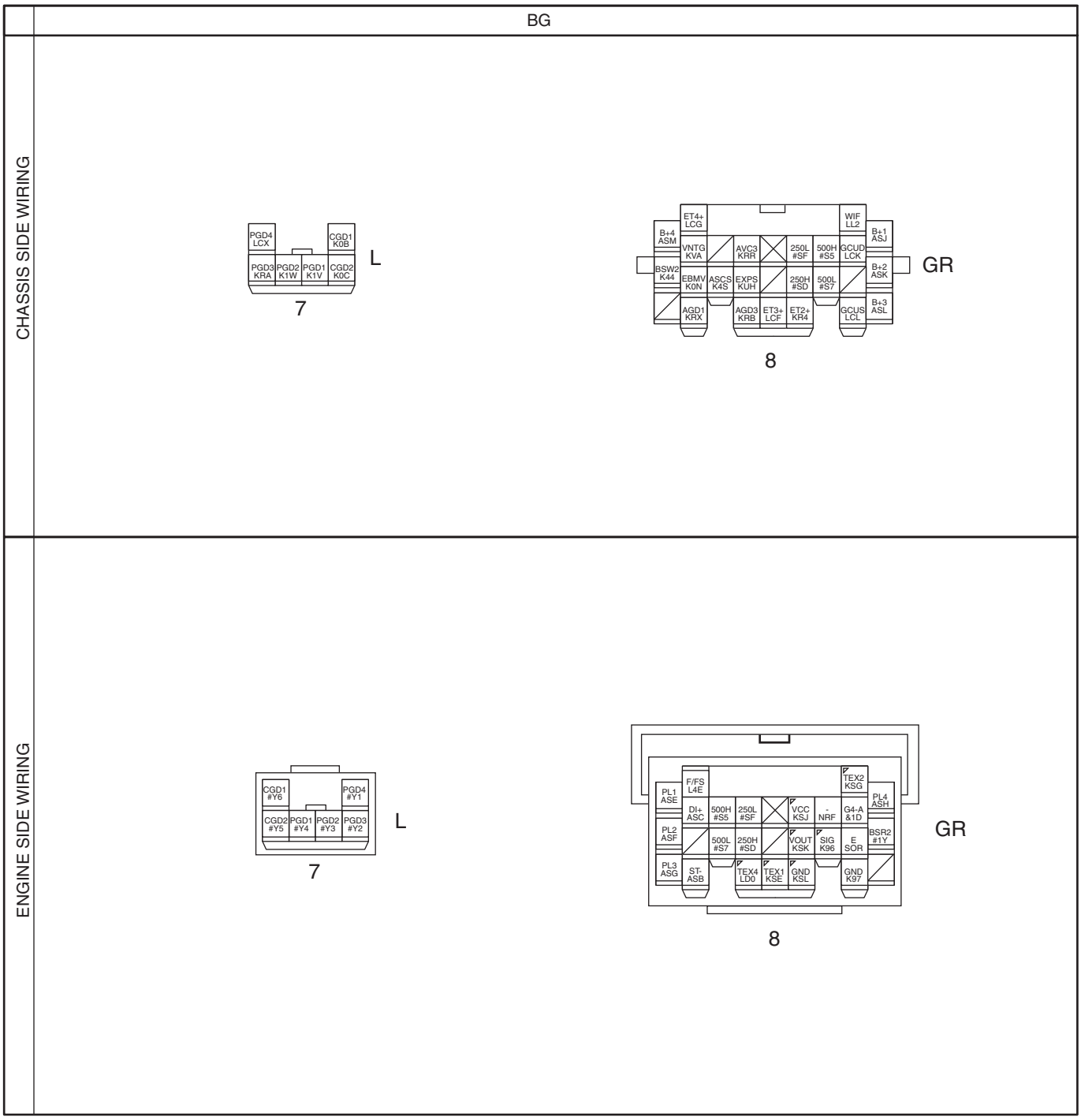


SAPH12Z080200160

**7 Chassis front harness to engine No.1 harness 6P (GND)**

**8 Chassis front harness to engine No.1 harness 26P**

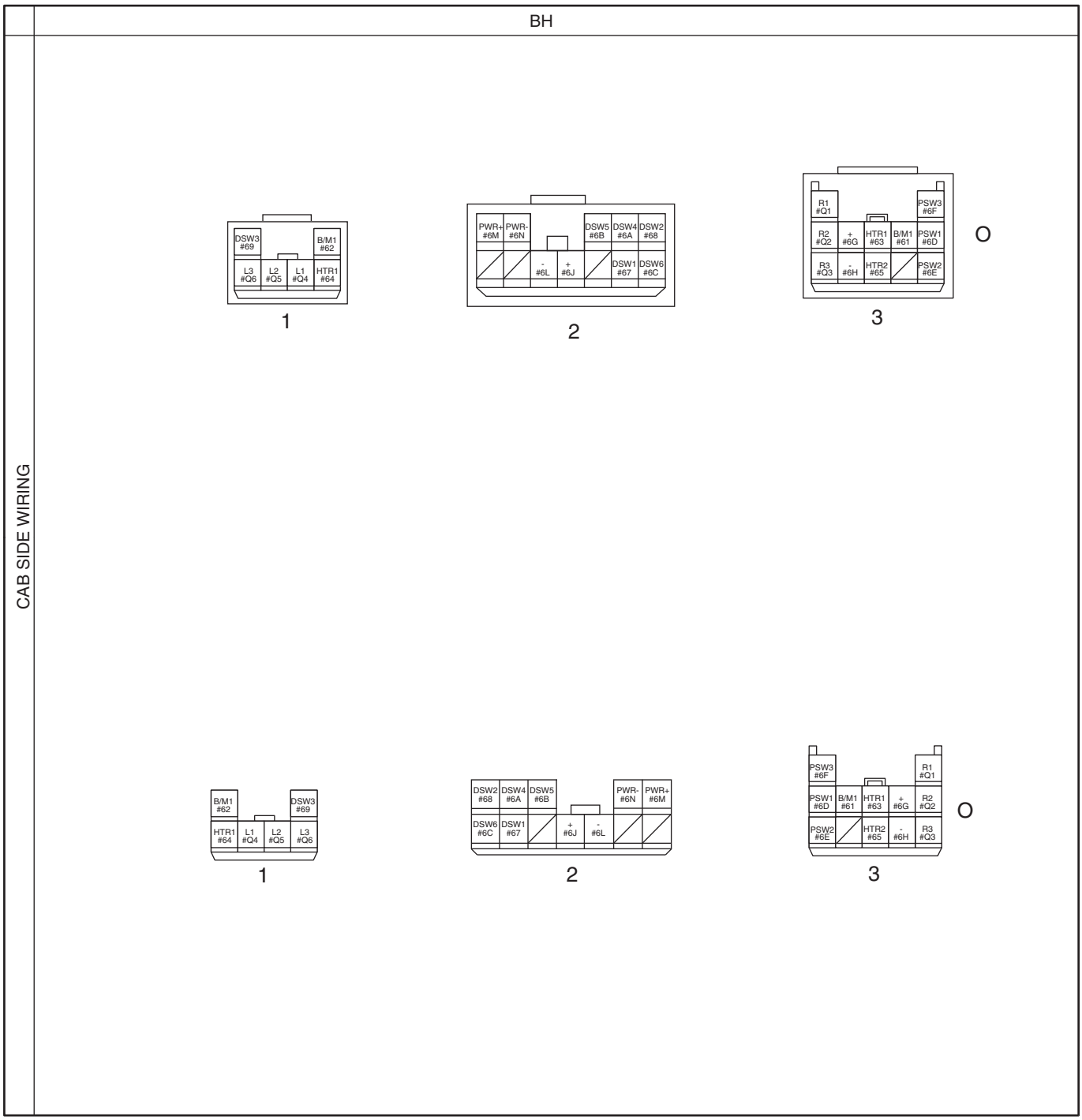


SAPH12Z080200161

**BH WIRE TO WIRE CONNECTOR (OUT THE BULK HEAD CONNECTOR BOX)**

**1 Cab main harness to door LH harness 1**

**2 Cab main harness to door LH harness 2**

**3 Cab main harness to door RH harness**

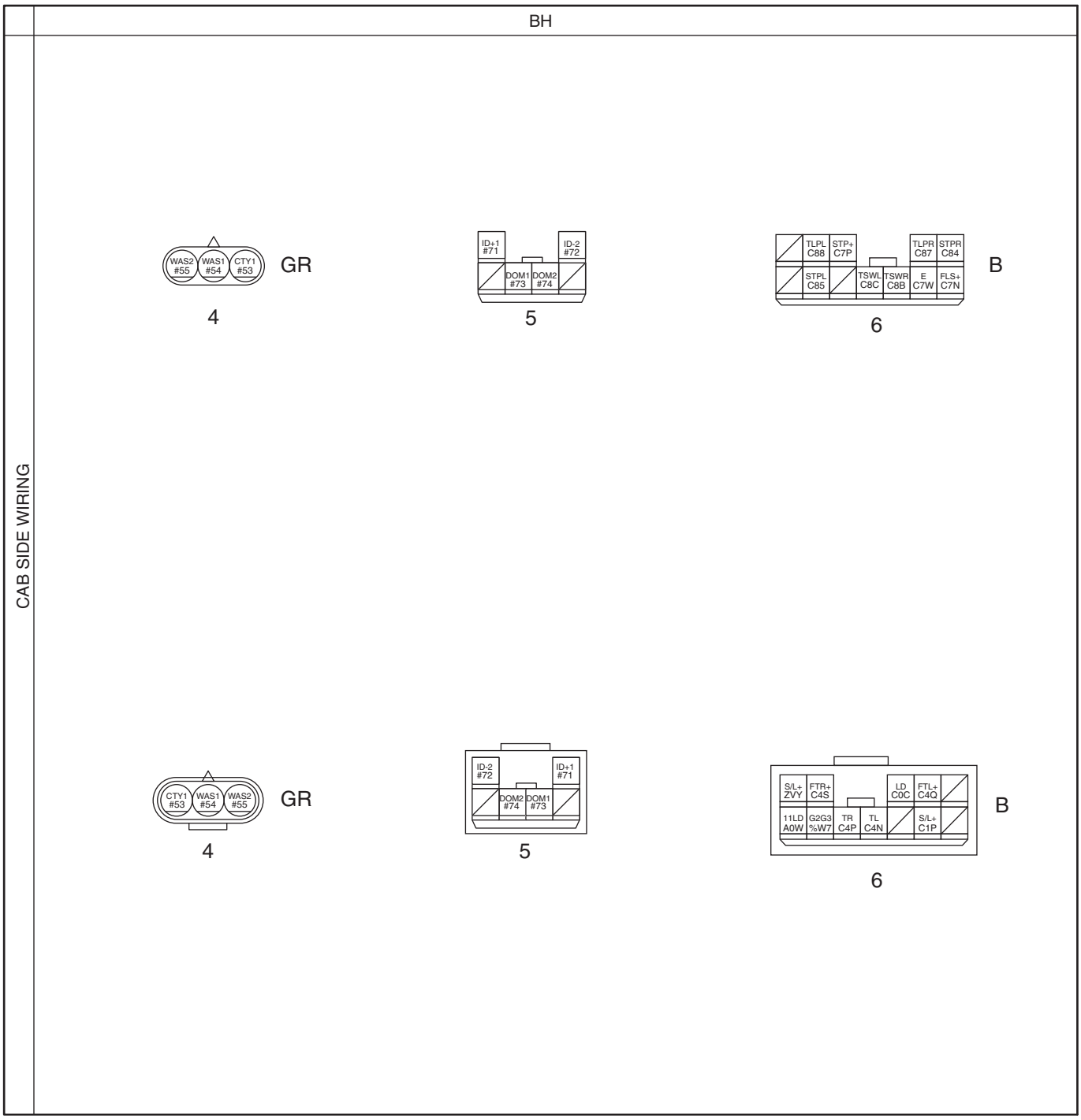


SAPH12Z080200162

**4 Cab main harness to floor harness**

**5 Cab main harness to roof harness**

**6 Cab main harness to flasher sub harness**

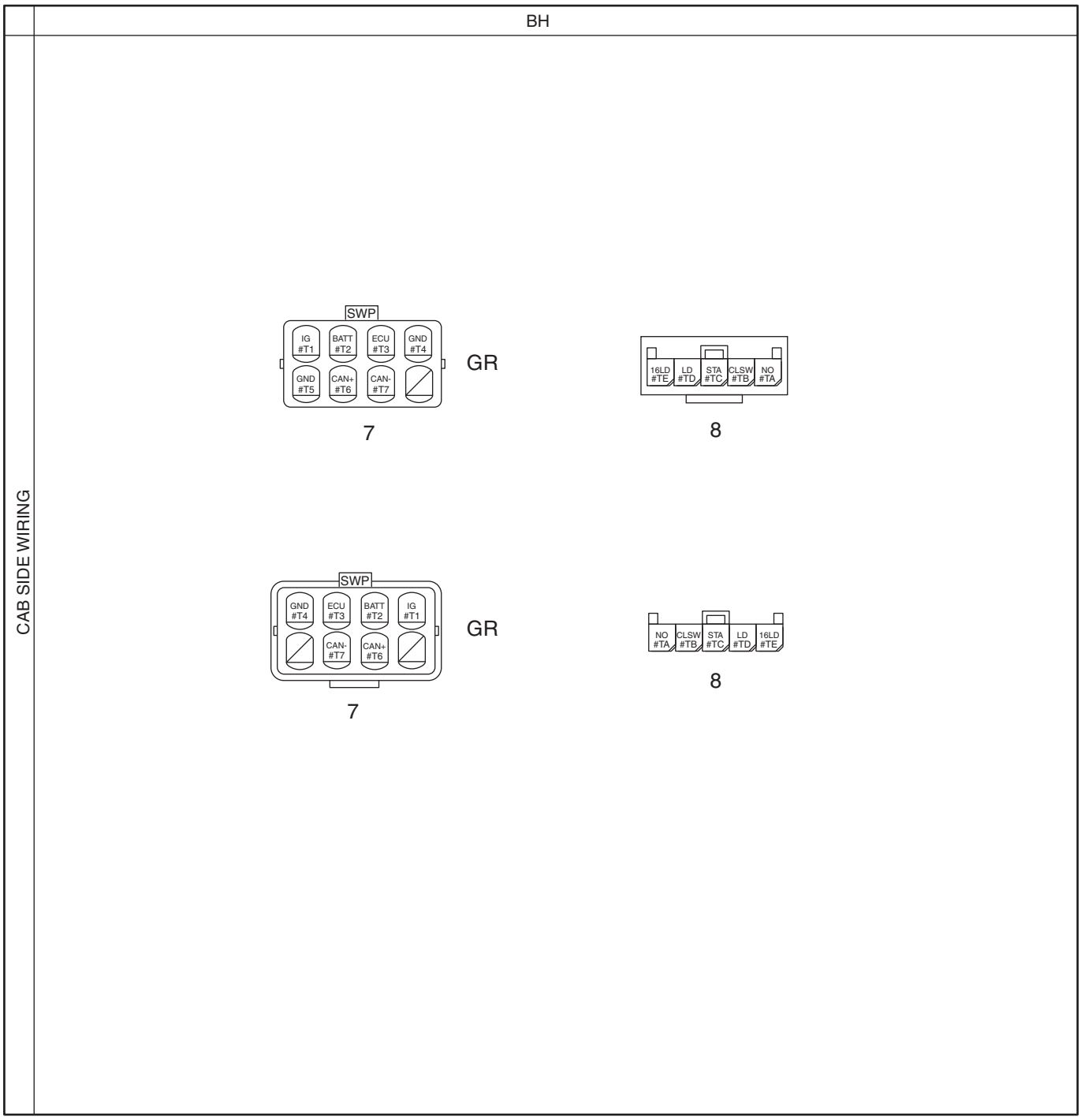


SAPH12Z080200163

**7 Cab main harness to AT shift harness**

**8 Cab main harness to clutch switch harness**

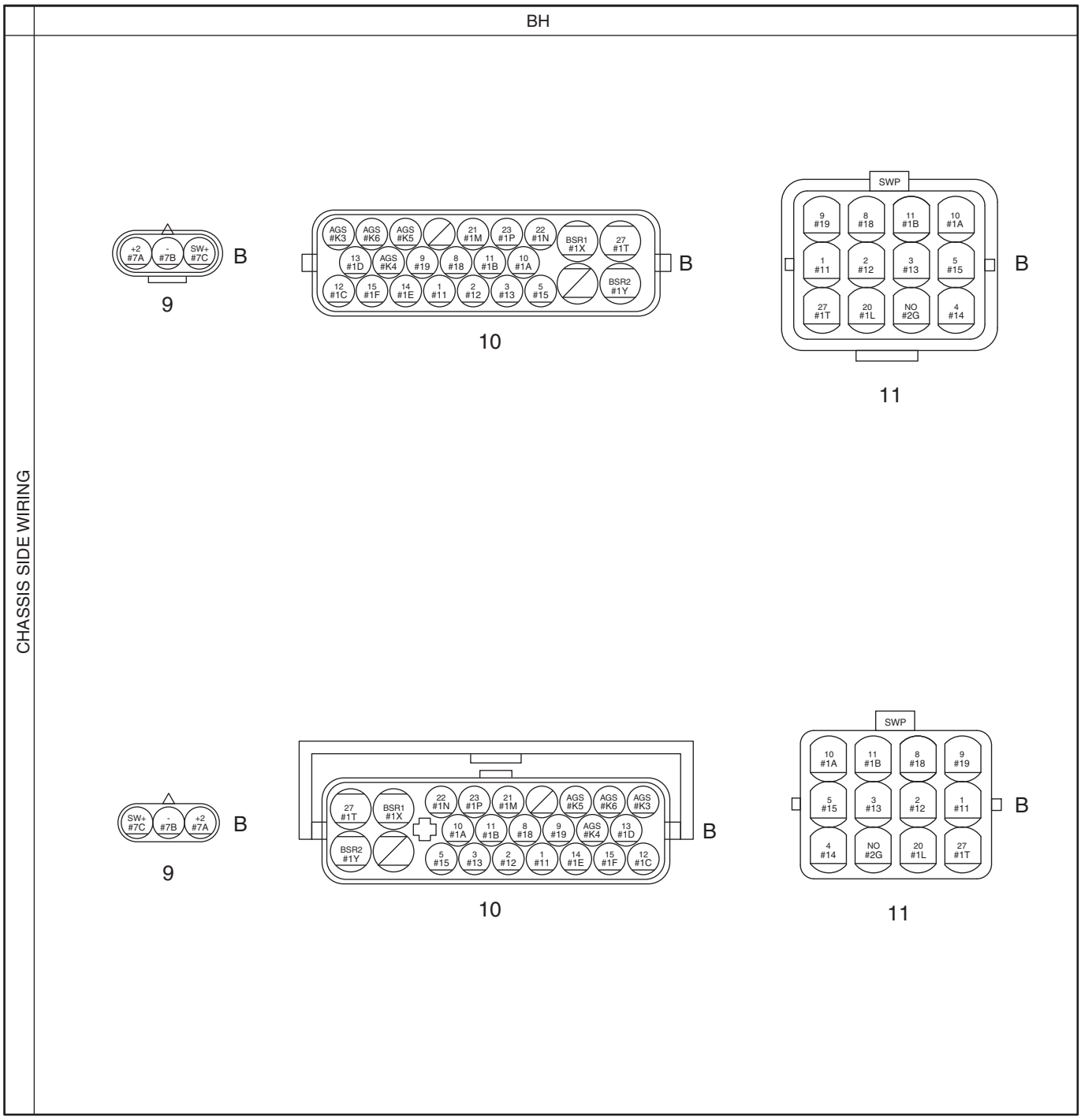


SAPH12Z080200164

**9 Chassis front harness to differential lock harness**

**10 Chassis front harness to intermediate harness (For full air brake)**

**11 Chassis front harness to intermediate harness (For HYDRO MAX brake)**

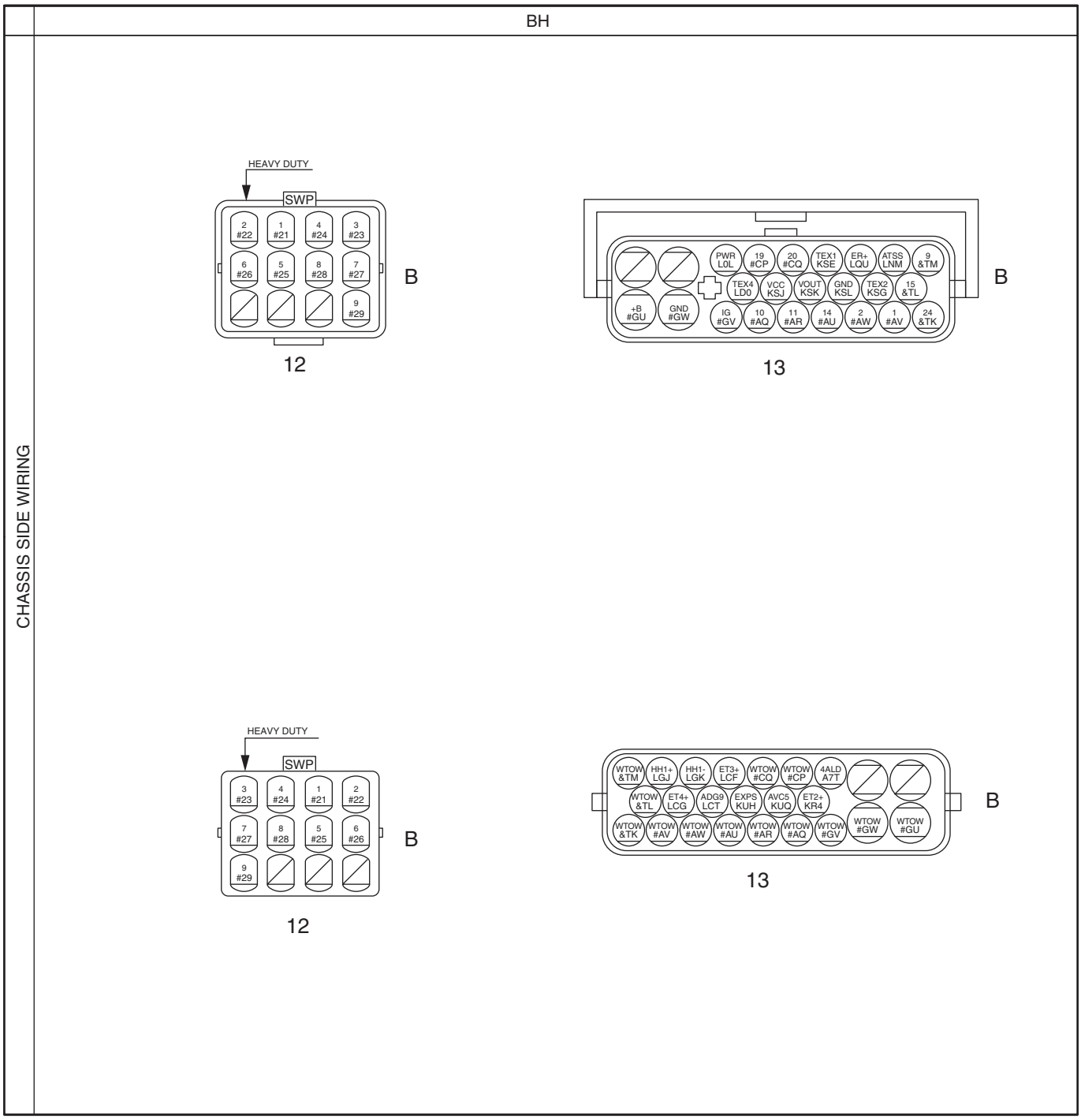


SAPH12Z080200165

**12 Chassis front harness to head light harness**

**13 Chassis front harness to engine No.2 harness**

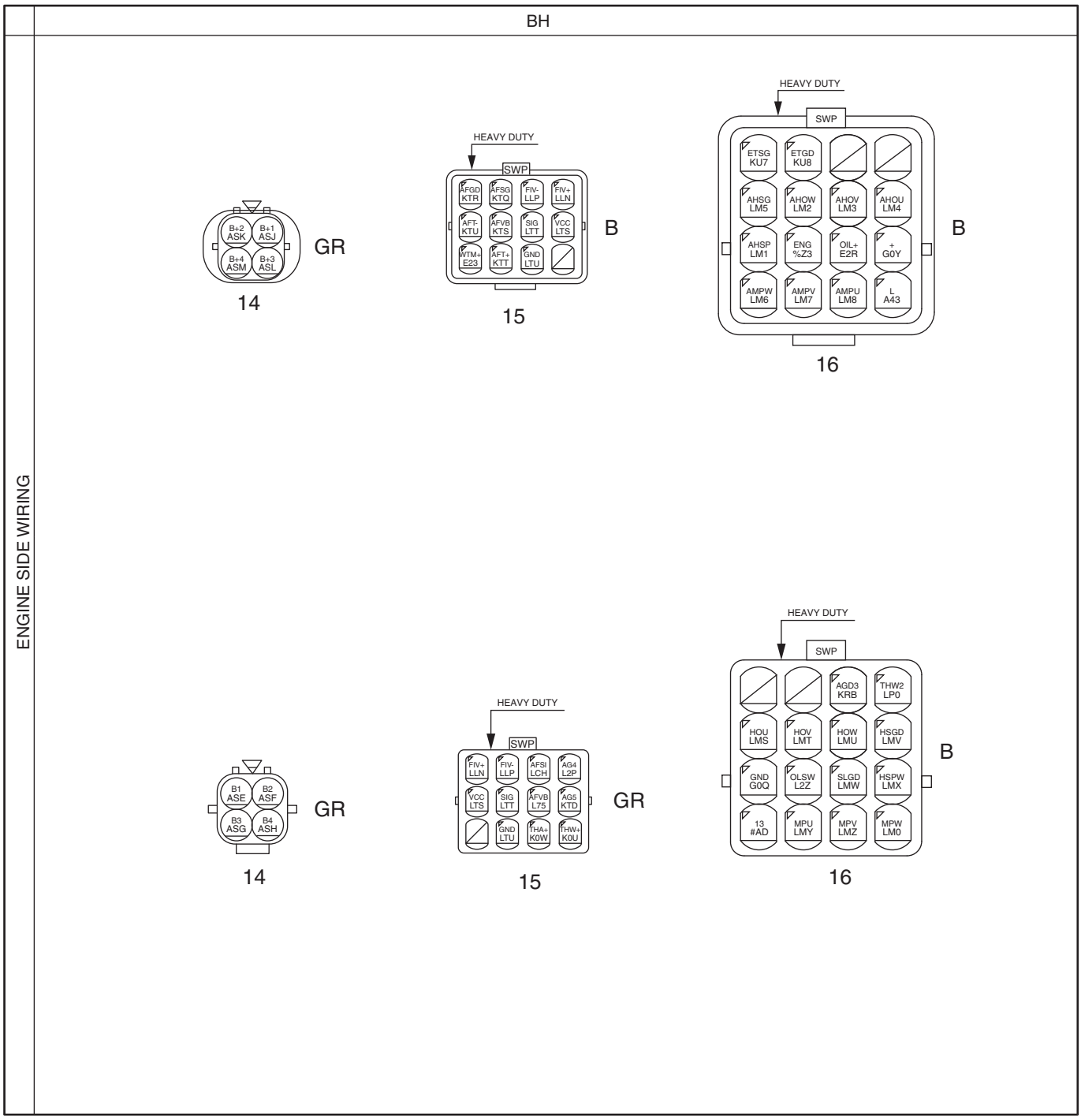


SAPH12Z080200166

**14 Engine No.1 harness to engine No.3 harness glow (Glow plug)**

**15 Engine No.1 harness to engine No.1 sub harness 12P**

**16 Engine No.1 harness to engine No.1 sub harness 16P**

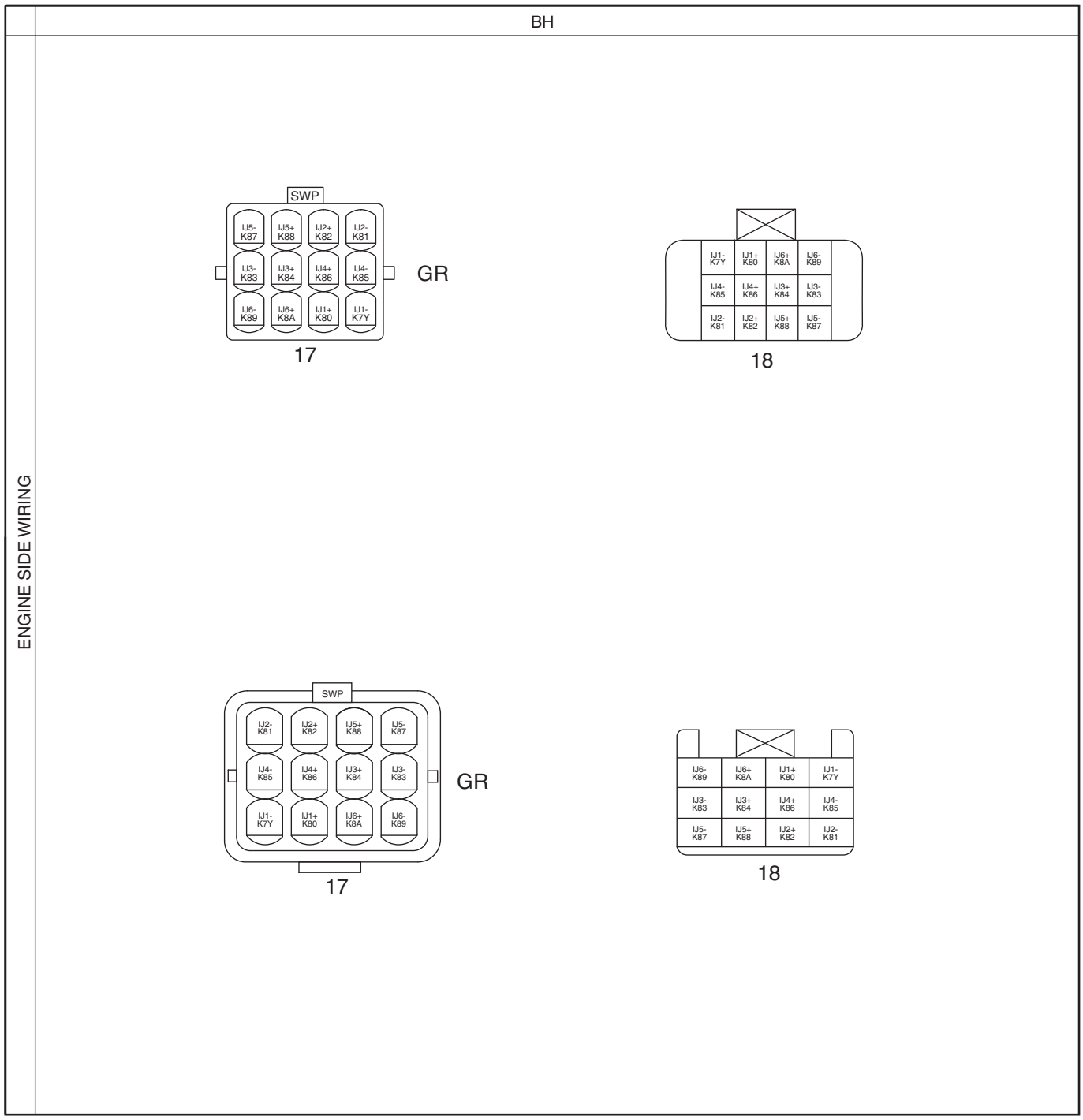


SAPH12Z080200167

**17 Engine No.1 harness to link-up connector**

**18 Link-up connector to injector harness**

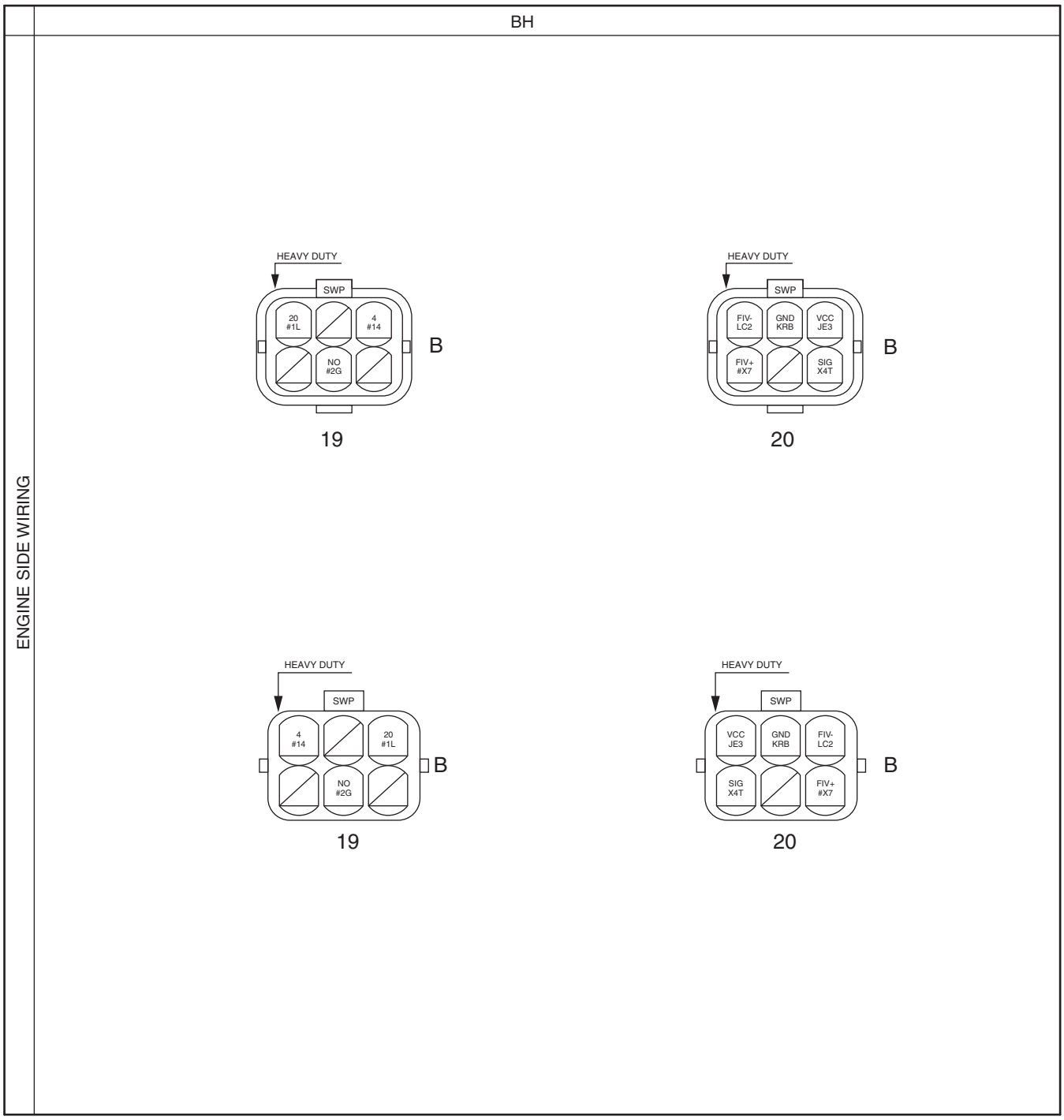


SAPH12Z080200168

**19 Chassis front harness to intermediate harness (For air suspension dump)**

**20 Engine sub harness RH to fuel sub harness**

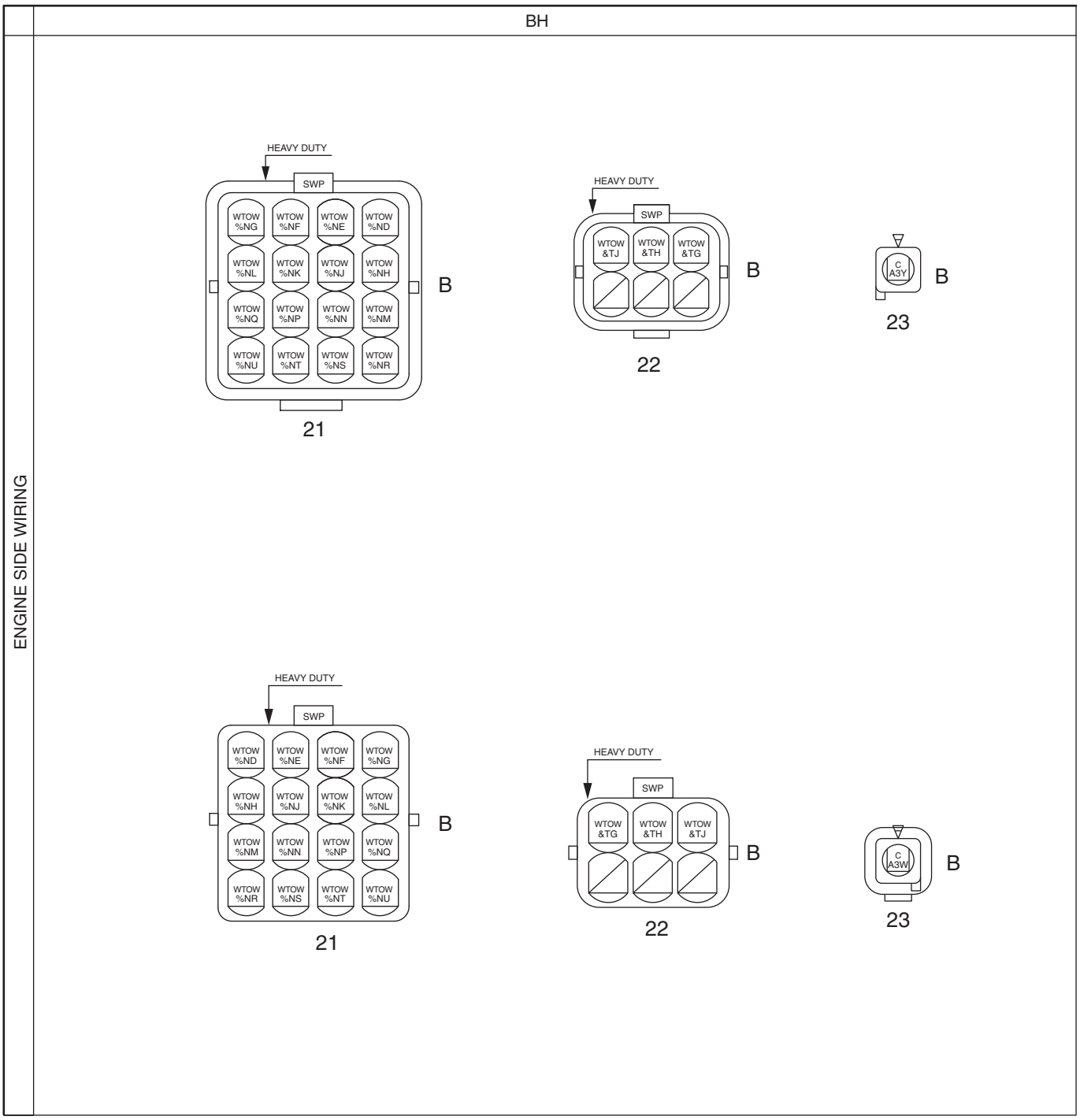


SAPH12Z080200169

**21 Muffler harness front to rear A**

**22 Muffler harness front to rear B**

**23 Chassis front harness (starter relay) to starter harness**

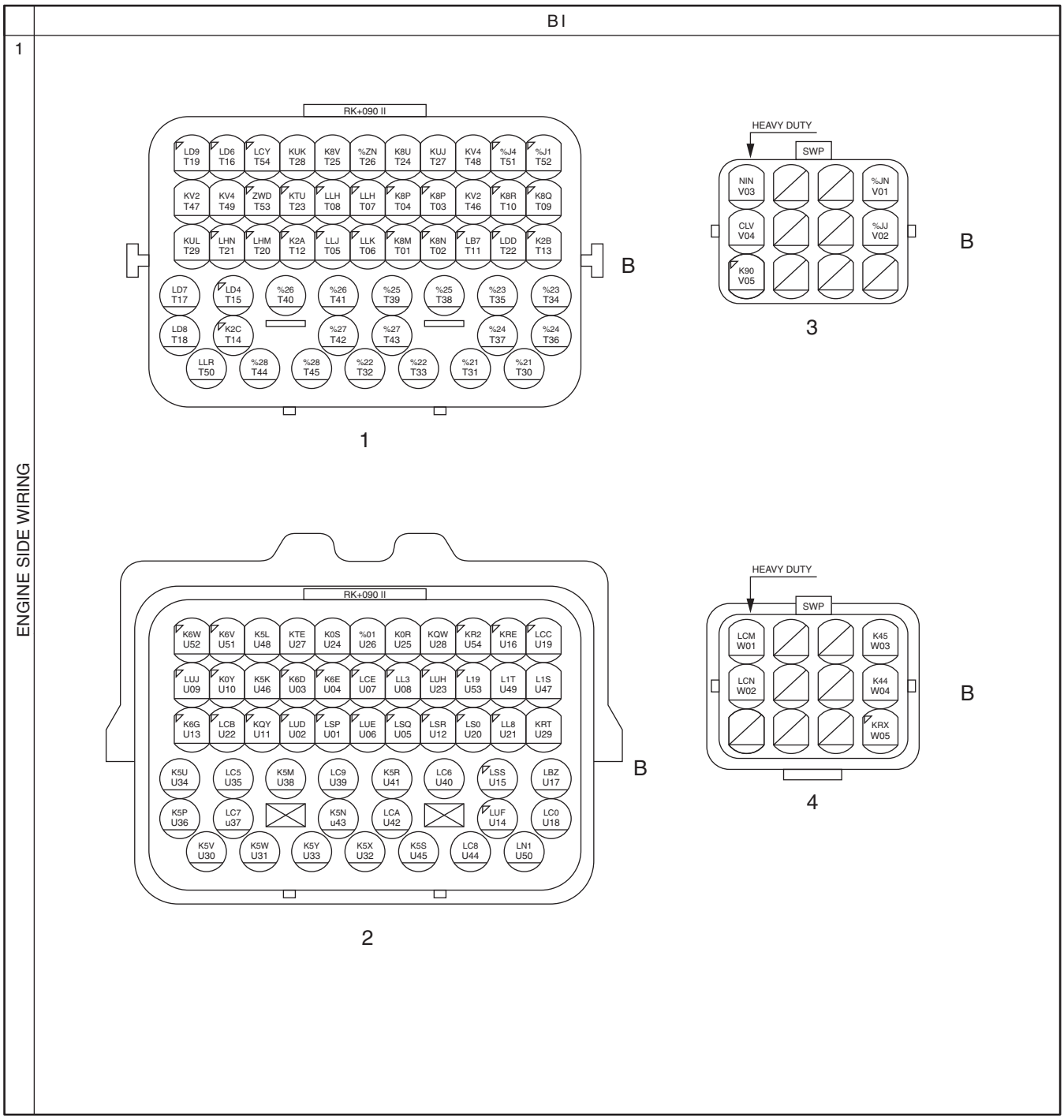


SAPH12Z080200170

**BI SIGNAL CHECK CONNECTOR**

**1 Signal check connector No.1**

**2 Signal check connector No.2**

**3 Signal check connector No.3**

**4 Signal check connector No.4**

# POSITION OF CONNECTOR

EN12Z0802J100005

Position of connector A

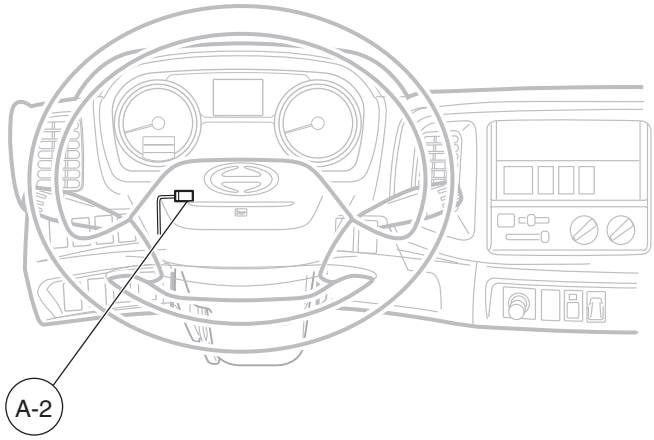


A-2: Starter switch

SAPH12Z080200171

Position of connectors B,D,E,I,AG,AH,AI,AJ,AX

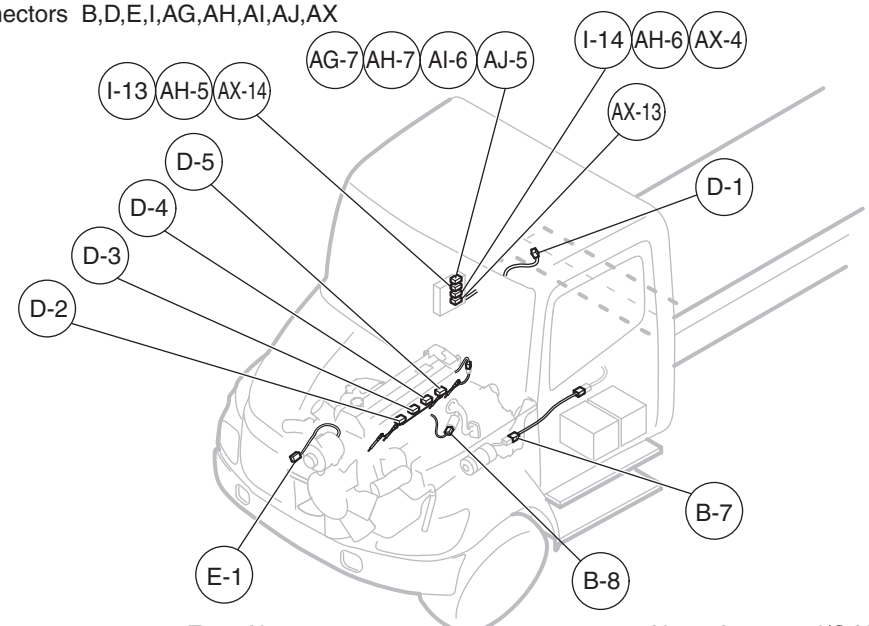


B-7: Starter
B-8: Clutch switch
D-1: Glow control unit
D-2: Glow plug No.1
D-3: Glow plug No.2
D-4: Glow plug No.3
D-5: Glow plug No.4
E-1: Alternator
I-13: Parking brake 4P J/C
I-14: Air suspension damp diode No.1
AG-7: Actuator J/C No.1
AH-5: Parking brake 4P J/C
AH-6: Air suspension dump diode No.1
AH-7: Actuator J/C No.1
AI-6: Actuator J/C No.1
AJ-5: Actuator J/C No.1
AX-4: Air suspension dump diode No.1
AX-13: Air suspension dump diode No.2
AX-14: Parking brake 4P J/C

SAPH12Z080200172

Position of connectors B,F,H,I,K,L,V,W,X,Z,AA,AE,AF,AG,AH,AI,AM,AN,AQ,AR,AT,AU,AX,AZ,BA,BB,BE,BF

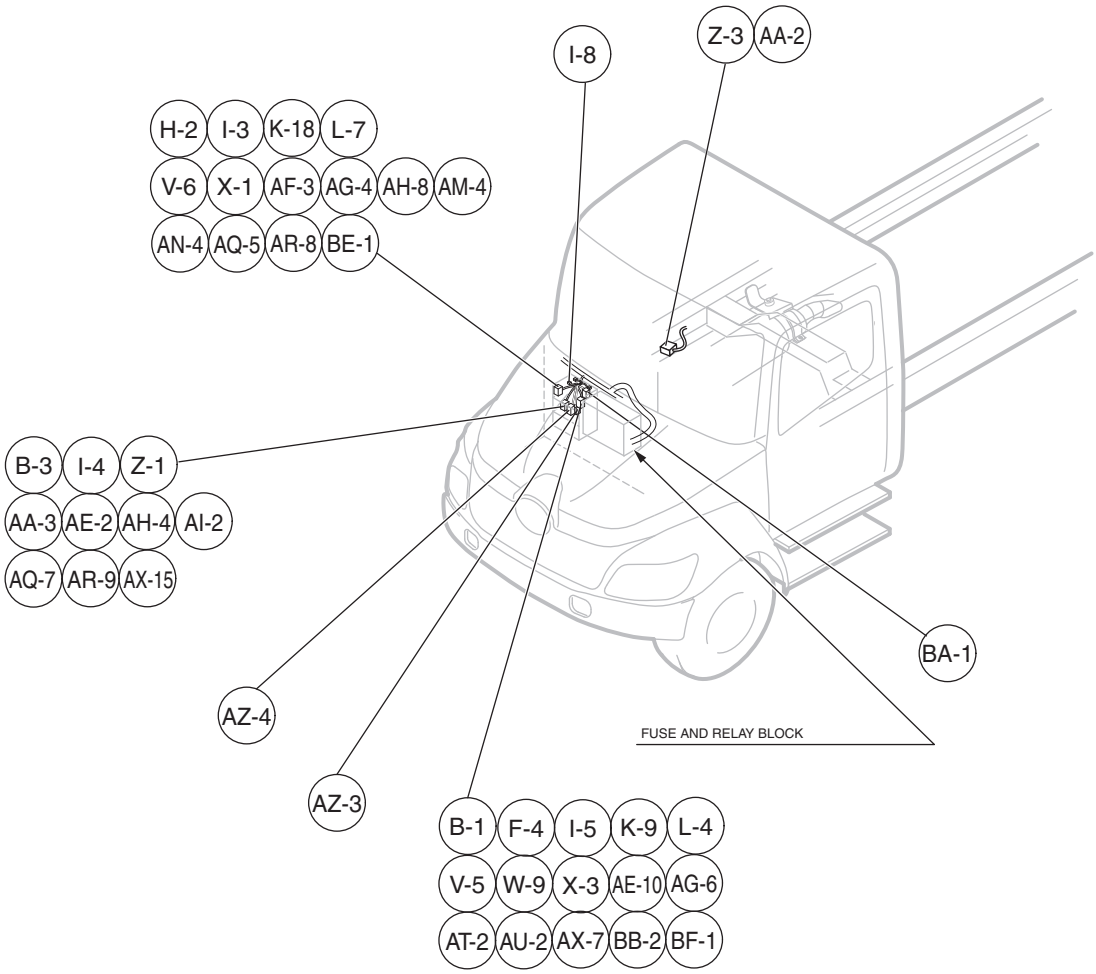


B-1: Common rail J/C No.2
B-3: J/C signal
F-4: Common rail J/C No.2
H-2: Common rail J/C No.1
I-3: Common rail J/C No.1
I-4: J/C signal
I-5: Common rail J/C No.2
I-8: Parking brake off diode (For center parking)
K-9: Common rail J/C No.2
K-18: Common rail J/C No.1
L-4: Common rail J/C No.2
L-7: Common rail J/C No.1
V-5: Common rail J/C No.2
V-6: Common rail J/C No.1
W-9: Common rail J/C No.2
X-1: Common rail J/C No.1
X-3: Common rail J/C No.2
Z-1: J/C signal
Z-3: Exhaust brake solenoid valve
AA-2: Exhaust brake solenoid valve
AA-3: J/C signal
AE-2: J/C signal
AE-10: Common rail J/C No.2
AF-3: Common rail J/C No.1
AG-4: Common rail J/C No.1
AG-6: Common rail J/C No.2
AH-4: J/C signal
AH-8: Common rail J/C No.1
AI-2: J/C signal
AM-4: Common rail J/C No.1
AN-4: Common rail J/C No.1
AQ-5: Common rail J/C No.1
AQ-7: J/C signal
AR-8: Common rail J/C No.1
AR-9: J/C signal
AT-2: Common rail J/C No.2
AU-2: Common rail J/C No.2
AX-7: Common rail J/C No.2
AX-15: J/C signal
AZ-3: CAN J/C 2 High
AZ-4: CAN J/C 2 Low
BA-1: CAN TMN 6
BB-2: Common rail J/C No.2
BE-1: Common rail J/C No.1
BF-1: Common rail J/C No.2

SAPH12Z080200173

Position of connectors B,H,I,L,R,AG,AH,AI,AJ,AM,AN,AO,AQ,AR,AT,AU,AX,AZ

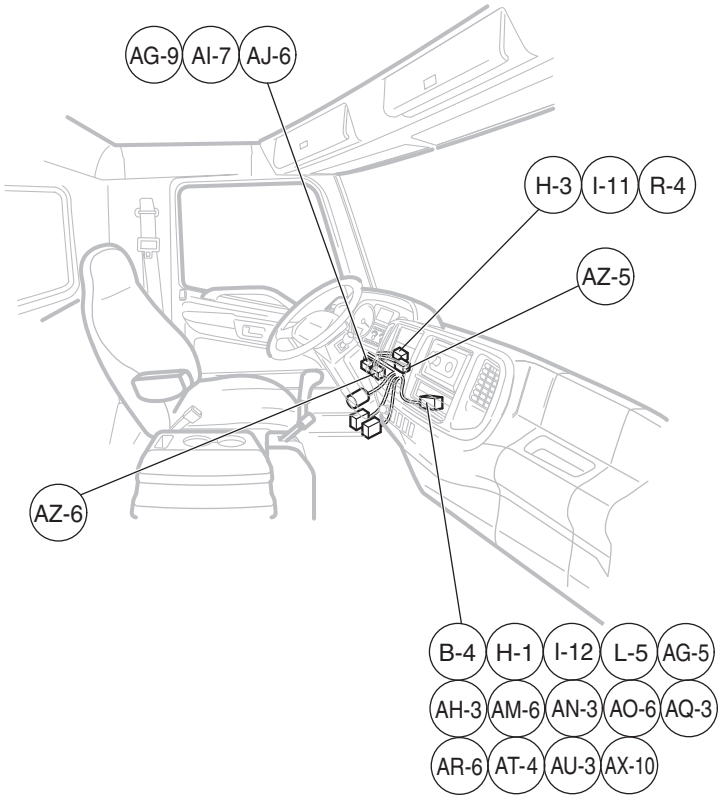


B-4: J/C ground
H-1: J/C ground
H-3: J/C ground 4P
I-11: J/C ground 4P
I-12: J/C ground
L-5: J/C ground
R-4: J/C ground 4P

AG-5: J/C ground
AG-9: Actuator J/C No.3
AH-3: J/C ground
AI-7: Actuator J/C No.3
AJ-6: Actuator J/C No.3
AM-6: J/C ground
AN-3: J/C ground
AO-6: J/C ground

AQ-3: J/C ground
AR-6: J/C ground
AT-4: J/C ground
AU-3: J/C ground
AX-10: J/C ground
AZ-5: CAN J/C 3 High
AZ-6: CAN J/C 3 Low

SAPH12Z080200174

Position of connectors B,F,G,P,AC,AI,AV

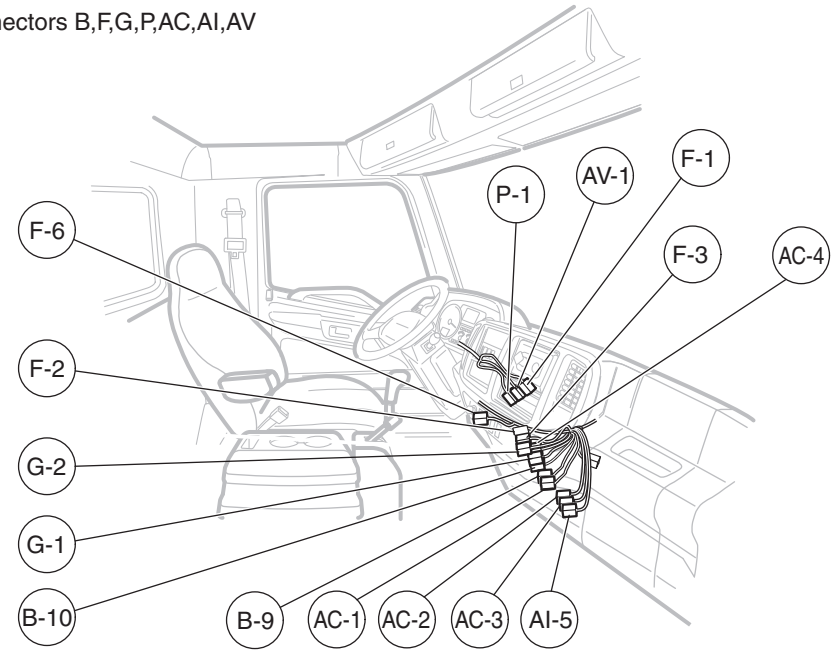


B-9: Neutral switch
B-10: Sub starter switch
F-1: Van light switch
F-2: Spare power source (Battery)
F-3: Spare power source (Starter switch ON)
F-6: Option connector (Cab)
G-1: Fog light switch
G-2: Fog light power source
P-1: Remote control mirror switch
AC-1: PTO switch 1
AC-2: PTO switch 2
AC-3: PTO cut relay
AC-4: Engine stop switch
AI-5: Idle up signal
AV-1: Differential lock switch

SAPH12Z080200175

Position of connectors F,Y,AC,AE

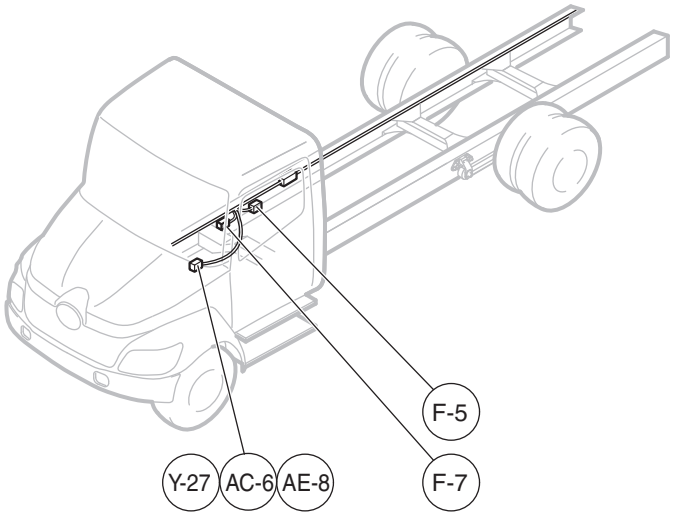


F-5: Spare power source
F-7: Option connector (Chassis)
Y-27: PTO Accelerator sensor
AC-6: PTO Accelerator sensor
AE-8: PTO Accelerator sensor

SAPH12Z080200176

Position of connectors I,AX

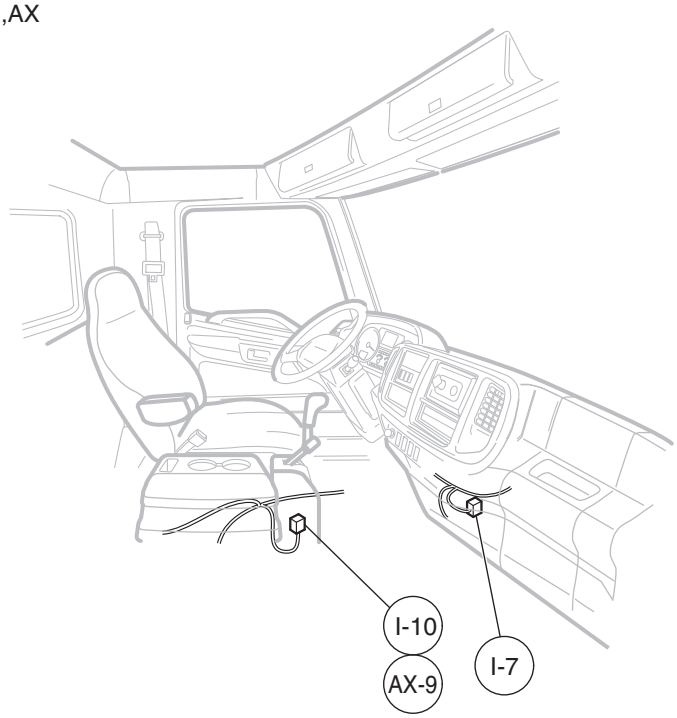


I-7: Coolant warning relay
I-10: Parking switch
AX-9: Parking switch

SAPH12Z080200177

Position of connectors I,O,R,S,AA,AE,AH,AI,AX

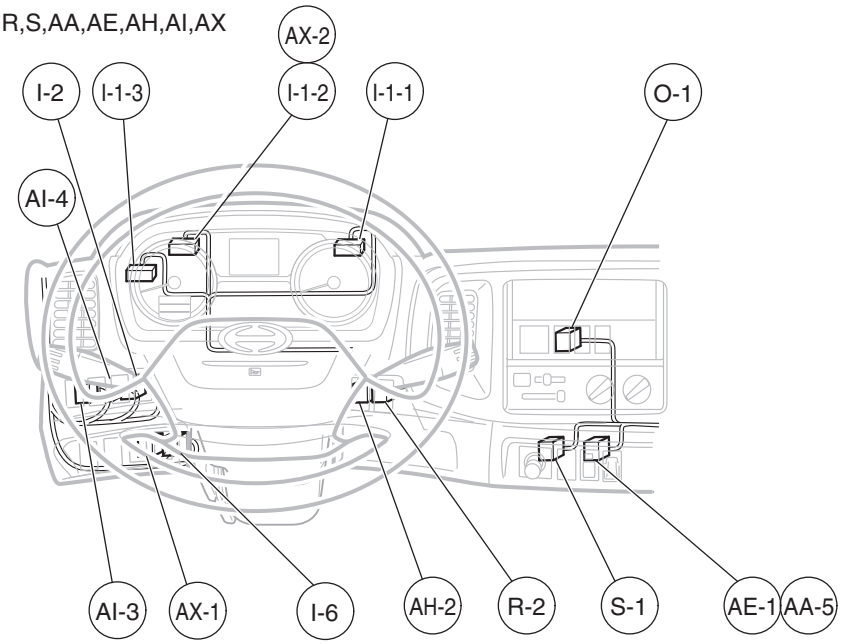


I-1-1: Combination meter
I-1-2: Combination meter
I-1-3: Combination meter
I-2: Rheostat
I-6: Information display control switch
O-1: Mirror heater switch
R-2: Air horn switch
S-1: Cigarette lighter or Accessory socket
AA-5: DPR manual regeneration swithc
AE-1: DPR manual regeneration switch
AH-2: Economy running switch
AI-3: Set/resume switch
AI-4: Cruise control main switch
AX-1: Air suspension dump switch
AX-2: Combination meter (24P)

SAPH12Z080200178

Position of connectors J,AF,AX

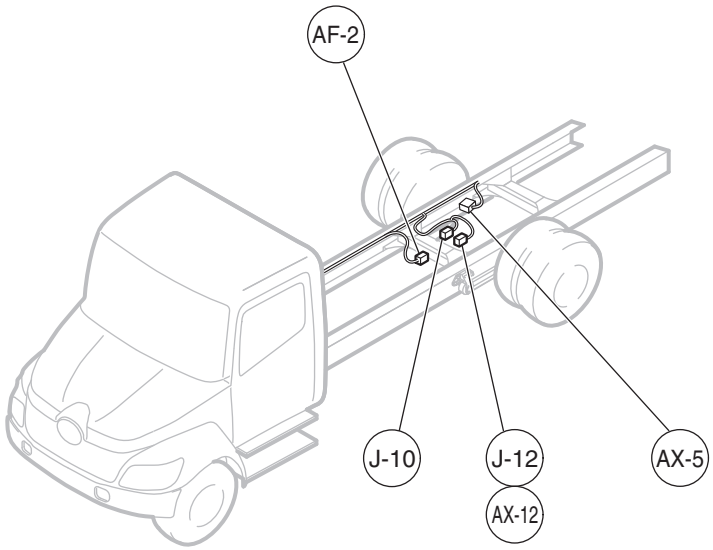


J-10: Spring brake switch (For wheel parking)
J-12: Buzzer off switch (For wheel parking)

AF-2: Brake switch (For Full air brake)
AX-5: Air suspension dump magnetic valve
AX-12: Buzzer off switch (For wheel parking)

SAPH12Z080200179

Position of connectors K

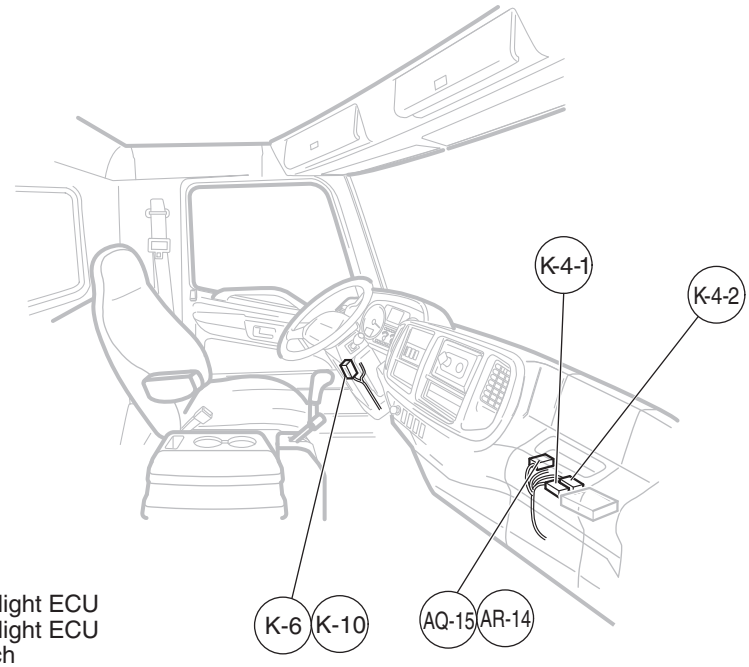


K-4-1: Daytime running light ECU
K-4-2: Daytime running light ECU
K-6: Light and turn switch
K-10: Light and turn switch
AQ-15: TRANS stop NC diode
AR-14: TRANS stop NC diode

SAPH12Z080200180

Position of connectors K

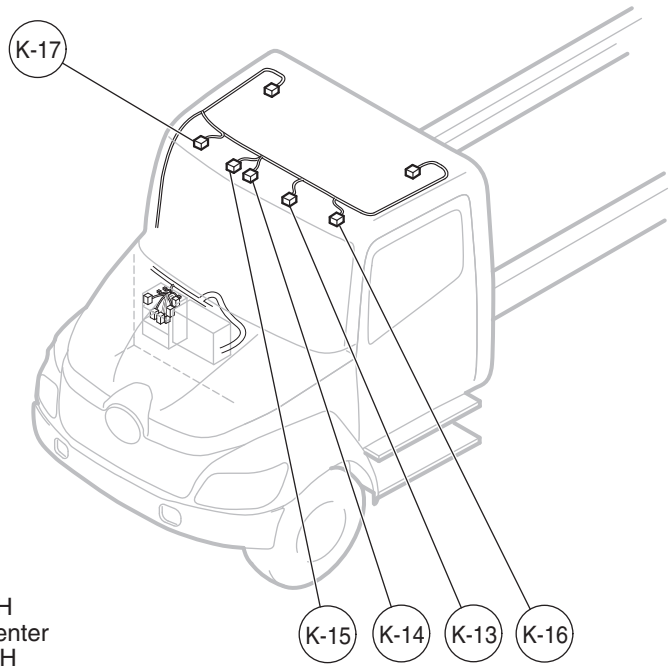


K-13: Identification light LH
K-14: Identification light center
K-15: Identification light RH
K-16: Roof clearance light LH
K-17: Roof clearance light RH

SAPH12Z080200181

Position of connectors K,O,P

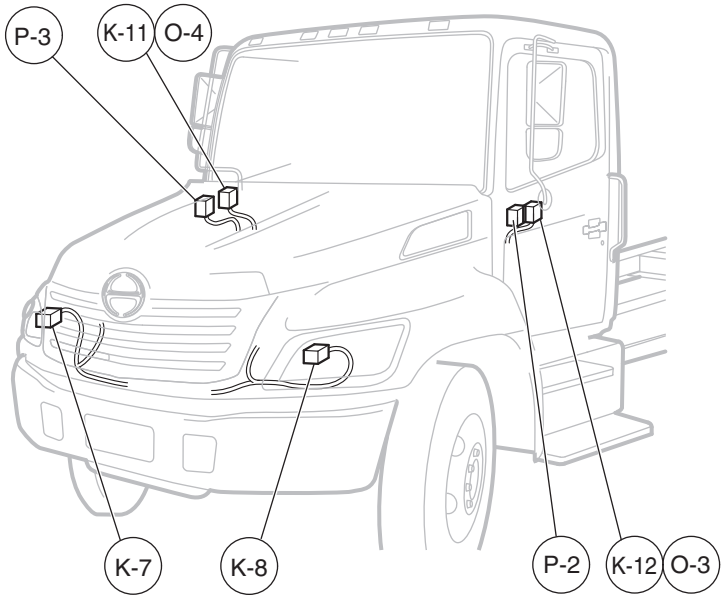


K-7: Head light RH
K-8: Head light LH
K-11: Heater and light mirror RH
K-12: Heater and light mirror LH
O-3: Heater and light mirror LH
O-4: Heater and light mirror RH
P-2: Remote control mirror LH
P-3: Remote control mirror RH

SAPH12Z080200182

Position of connectors A,J,L

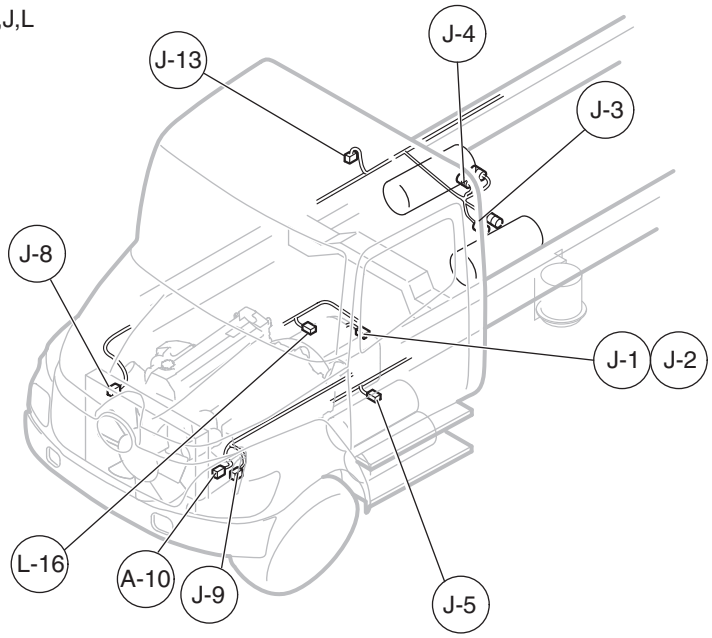


A-10 : Fuel filter heater sensor
J-1: Speed sensor (For HYDRO MAX brake and MTM)
J-2: Speed sensor (For full air brake and MTM)
J-3: Air pressure sensor front (For full air brake)
J-4: Air pressure sensor rear (For full air brake)
J-5: Fuel sensor LH
J-8: Coolant level switch
J-9: Engine coolant level sensor
J-13: Fuel sensor RH
L-16: Back-up light switch

SAPH12Z080200183

Position of connectors J,AV

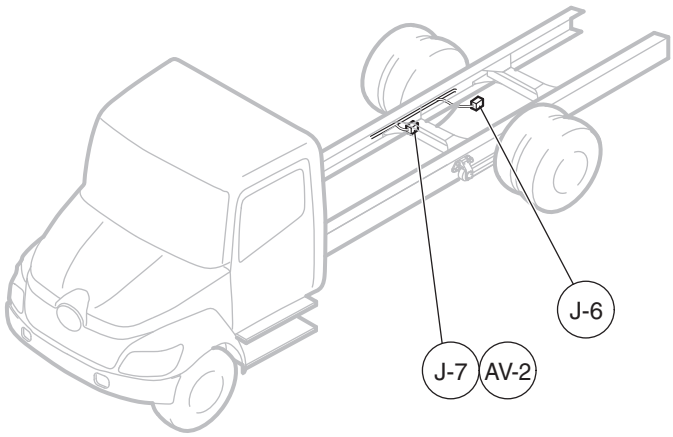


J-6: Manual differential lock switch
J-7: Manual differential lock magnetic valve
AV-2: Manual differential lock magnetic valve

SAPH12Z080200184

Position of connectors L,AW

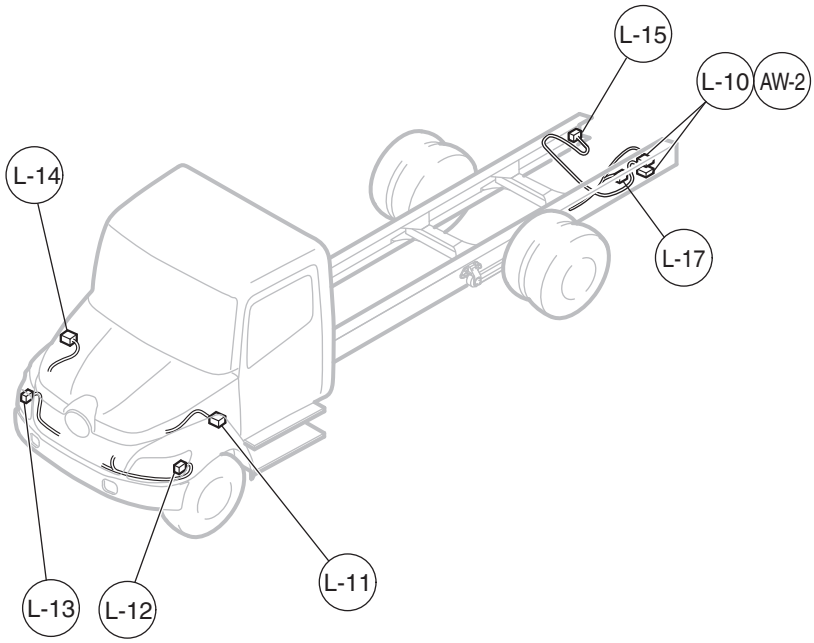


L-10: Rear combination light LH
L-11: Side turn light LH (For Fender)
L-12: Front turn light LH
L-13: Front turn light RH
L-14: Side turn light RH (For Fender)
L-15: Rear combination light RH
L-17: Back-up buzzer
AW-2: Rear combination light LH

SAPH12Z080200185

Position of connectors L,M,N,U,AF,AJ

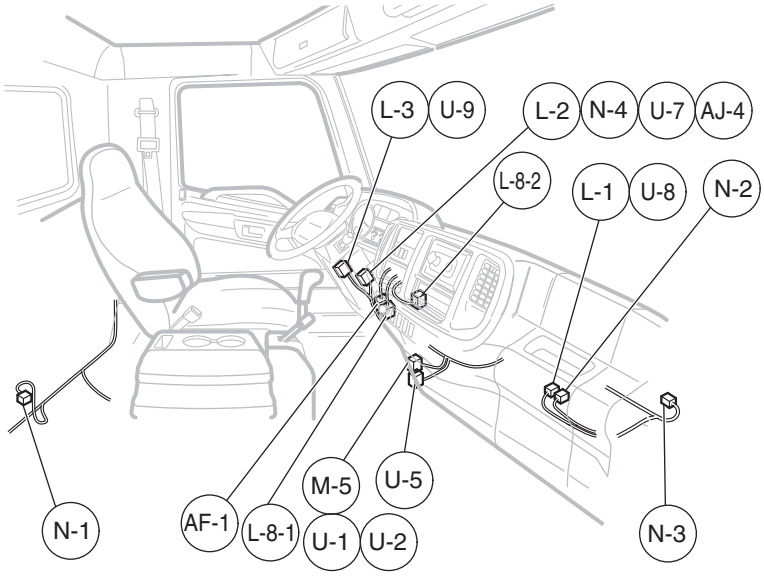


L-1: Stop and turn controller
L-2: Wiper and retarder switch
L-3: Light and turn switch
L-8-1: Stop light switch (For Full air brake)
L-8-2: Stop light switch (For HYDRO MAX brake)
M-5: Key-less entry controller
N-1: Washer pump motor
N-2: Wiper relay
N-3: Wiper motor
N-4: Wiper and retarder switch
U-1: Key-less entry short circuit connector
U-2: Key-less entry controller
U-5: Power door lock controller
U-7: Wiper and retarder switch
U-8: Stop and turn controller
U-9: Light and turn switch
AF-1: Brake switch (For HYDRO MAX brake)
AJ-4: Wiper and retarder switch

SAPH12Z080200186

Position of connectors M

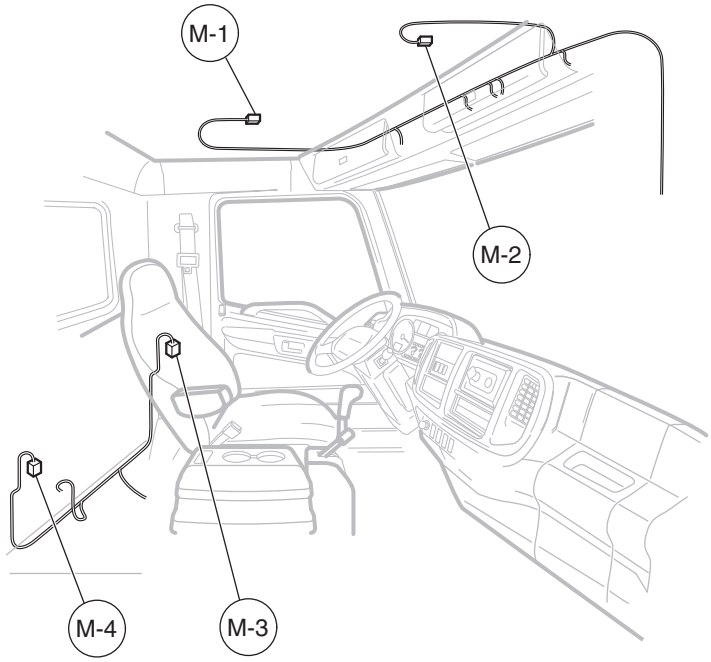


M-1: Dome light LH
M-2: Dome light RH
M-3: Courtesy switch front LH
M-4: Courtesy switch front RH

SAPH12Z080200187

Position of connector Q

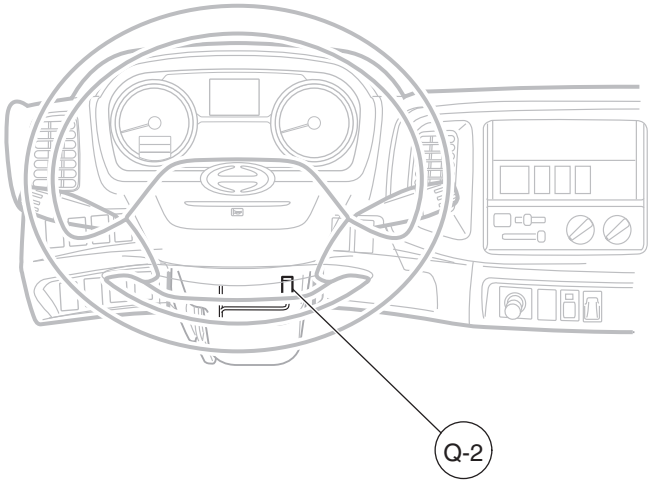


Q-2: Horn switch

SAPH12Z080200188

Position of connectors T,U

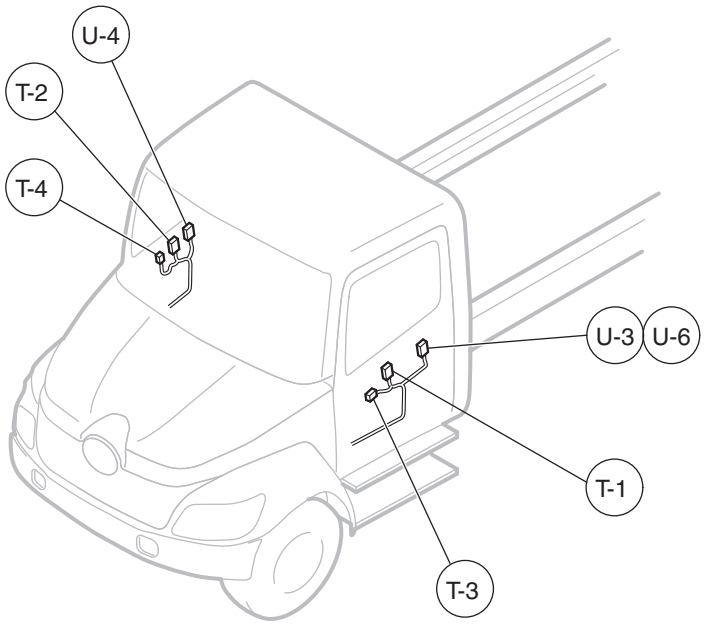


T-1: Driver seat master switch
T-2: Passenger seat sub switch
T-3: Power window motor (For Driver side)
T-4: Power window motor (For Passenger side)
U-3: Power door lock motor (For Driver side)
U-4: Power door lock motor (For Passenger side)
U-6: Power door lock switch (For Driver side)

SAPH12Z080200189

Position of connectors V

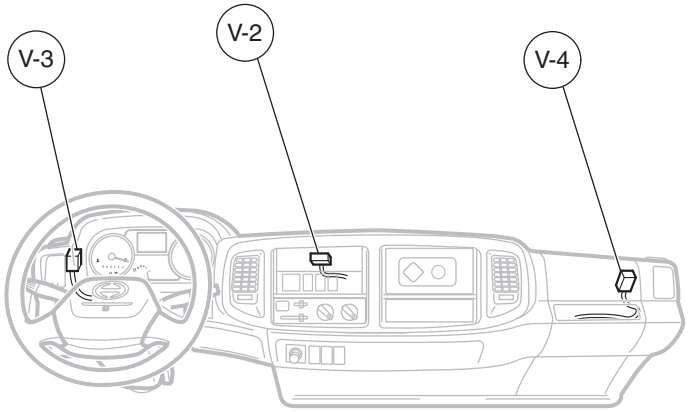


V-2: Radio/Audio unit
V-3: Front speaker LH
V-4: Front speaker RH

SAPH12Z080200190

Position of connectors W

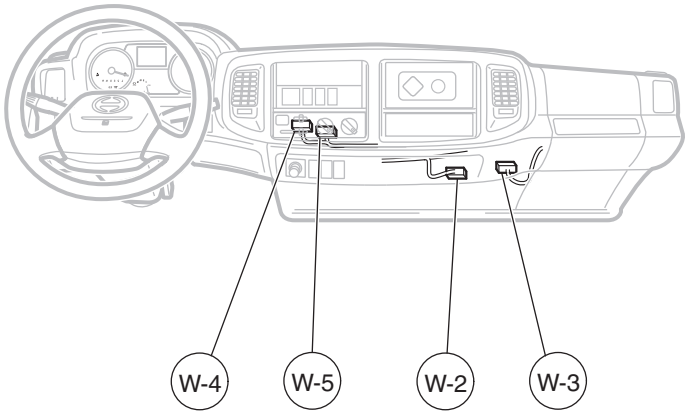


W-2: Heater and cooler unit
W-3: Blower motor
W-4: Blower switch
W-5: Air conditioner switch

SAPH12Z080200191

Position of connectors Q,R,W

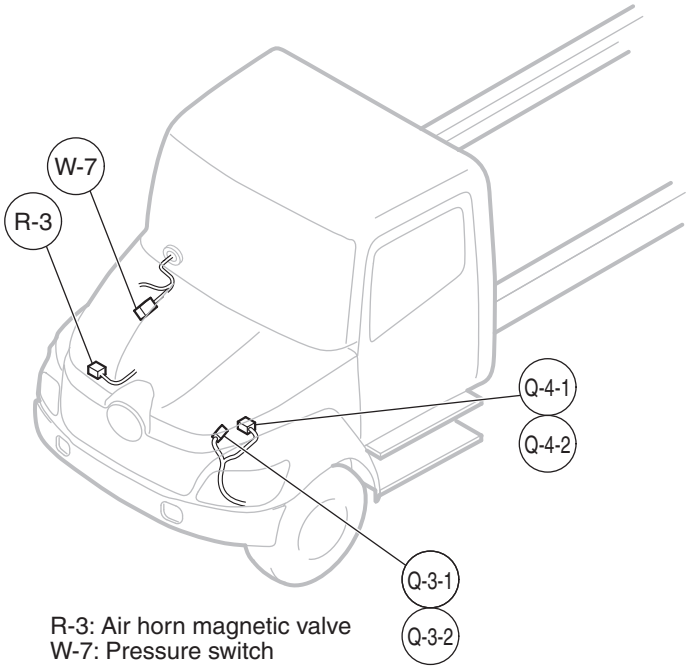


Q-3-1: Horn (Low)
Q-3-2: Horn (Low)
Q-4-1: Horn (High)
Q-4-2: Horn (High)

R-3: Air horn magnetic valve
W-7: Pressure switch

SAPH12Z080200192

Position of connectors L,X,AC,AQ,AR,AY

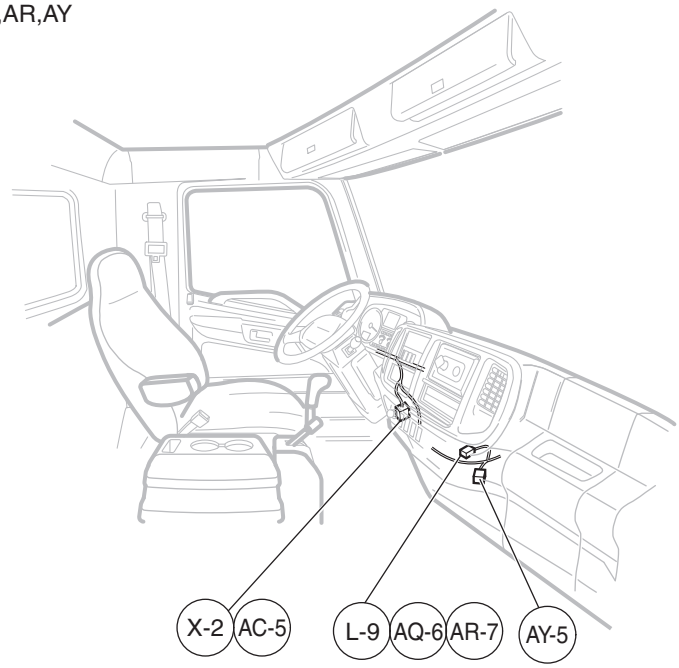


L-9: STP TRANS diode
X-2: Accelerator sensor
AC-5: Accelerator sensor
AQ-6: STP TRANS diode
AR-7: STP TRANS diode
AY-5: CAN J/C

SAPH12Z080200193

Position of connectors Y,Z,AA,AC,AD,AE,AF,AL,AZ,BA

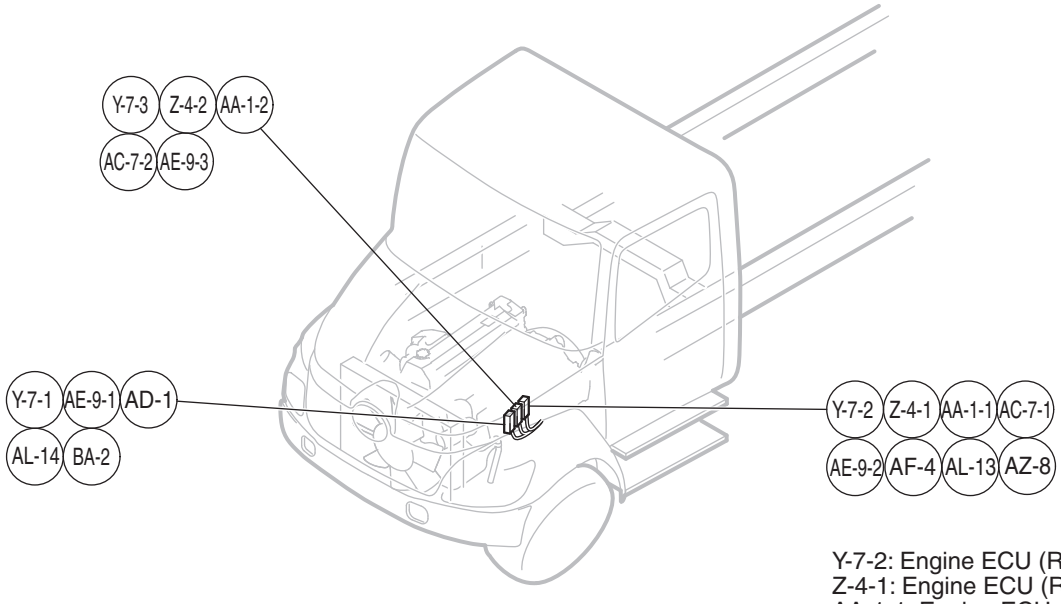


Y-7-1: Engine ECU (Front side)
AE-9-1: Engine ECU (Front side)
AD-1: Engine ECU (Front side)
AL-14: Engine ECU (Front side)
BA-2: Engine ECU (Front side)

Y-7-3: Engine ECU (Middle)
Z-4-2: Engine ECU (Middle)
AA-1-2: Engine ECU (Middle)
AC-7-2: Engine ECU (Middle)
AE-9-3: Engine ECU (Middle)

Y-7-2: Engine ECU (Rear side)
Z-4-1: Engine ECU (Rear side)
AA-1-1: Engine ECU (Rear side)
AC-7-1: Engine ECU (Rear side)
AE-9-2: Engine ECU (Rear side)
AF-4: Engine ECU (Rear side)
AL-13: Engine ECU (Rear side)
AZ-8: Engine ECU (Rear side)

SAPH12Z080200194

Position of connectors Y,AD,AE,BA

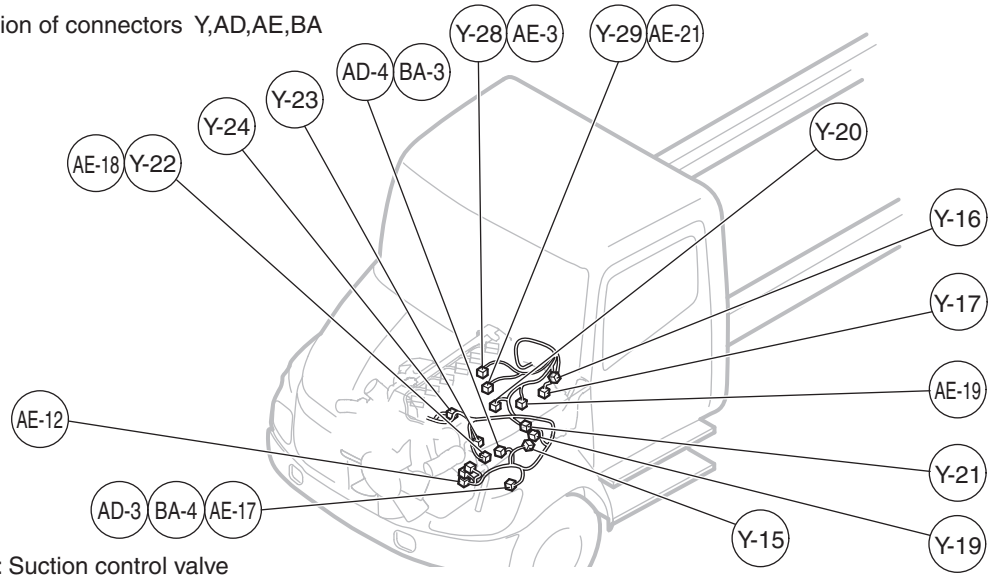


Y-15: Suction control valve
Y-16: Engine speed sub sensor
Y-17: Engine speed main sensor
Y-19: Fuel temperature sensor
Y-20: Common rail pressure sensor
Y-21: Intake air temperature sensor (intake manifold)
Y-22: Boost pressure sensor
Y-23: Intake air temperature sensor (intercooler outlet)
Y-24: EGR gas temperature sensor
Y-28: Exhaust gas temperature sensor 1 (ATC upstream)
Y-29: Exhaust gas temperature sensor 2 (ATC downstream)
AD-3: VNT controller
AD-4: EGR valve
AE-3: Exhaust gas temperature sensor 1 (ATC upstream)
AE-12: Intake throttle valve position sensor
AE-17: VNT controller
AE-18: Boost pressure sensor
AE-19: Fuel cut valve
AE-21: Exhaust gas temperature sensor 2 (ATC dwonstream)
BA-3: EGR valve
BA-4: VNT controller

SAPH12Z080200195

Position of connectors W,Y,AD,AE

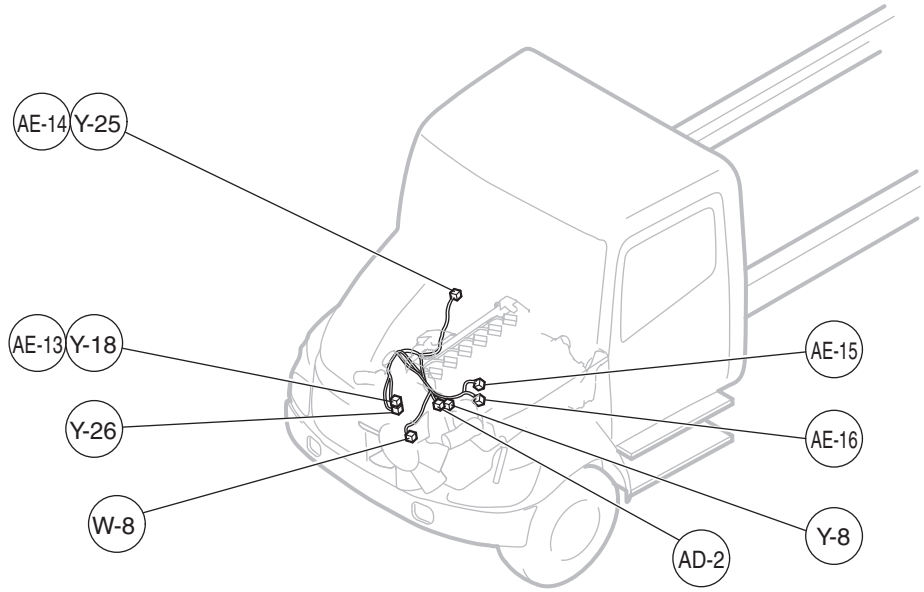


W-8: Compressor
Y-8: Oil pressure switch
Y-18: Engine coolant temperature sensor 1
Y-25: Air flow sensor
Y-26: Engine coolant temperature sensor 2
AD-2: VNT actuator
AE-13: Engine coolant temperature sensor 1
AE-14: Air flow sensor
AE-15: Aftertreatment fuel injection line pressure sensor
AE-16: Aftertreatment fuel injector (Fuel dosing valve)

SAPH12Z080200196

Position of connectors Y, BD

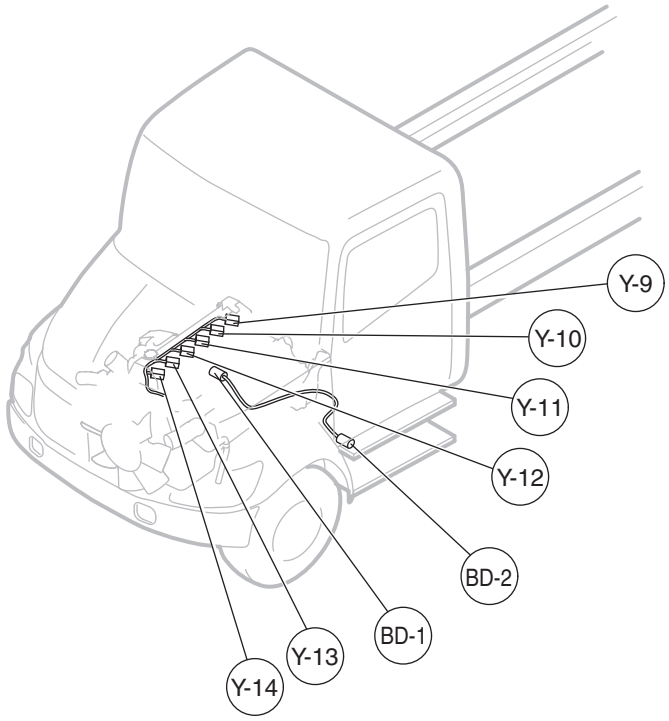


Y-9: Injector 6
Y-10: Injector 5
Y-11: Injector 4
Y-12: Injector 3
Y-13: Injector 2
Y-14: Injector 1
BD-1: Plug heater
BD-2: Outlet cord

SAPH12Z080200197

Position of connectors AG, AJ, AT, AZ, BH

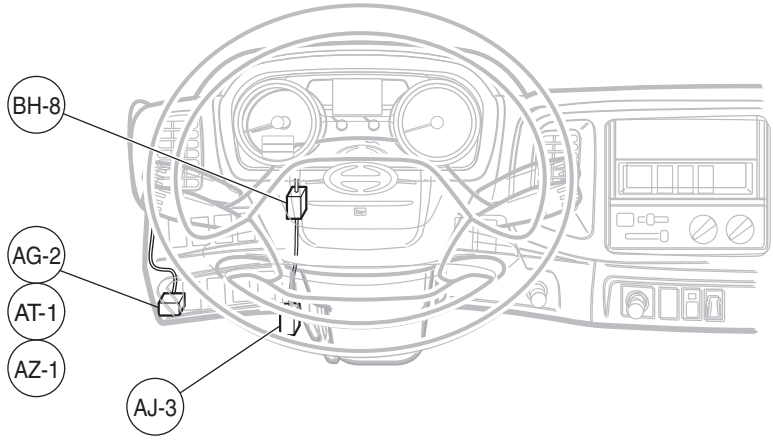


AG-2: DLC connector (16P)
AJ-3: Exhaust clutch switch
AT-1: DLC connector (16P)
AZ-1: DLC connector (16P)
BH-8: Cab main harness to clutch switch harness

SAPH12Z080200198

Position of connector Z

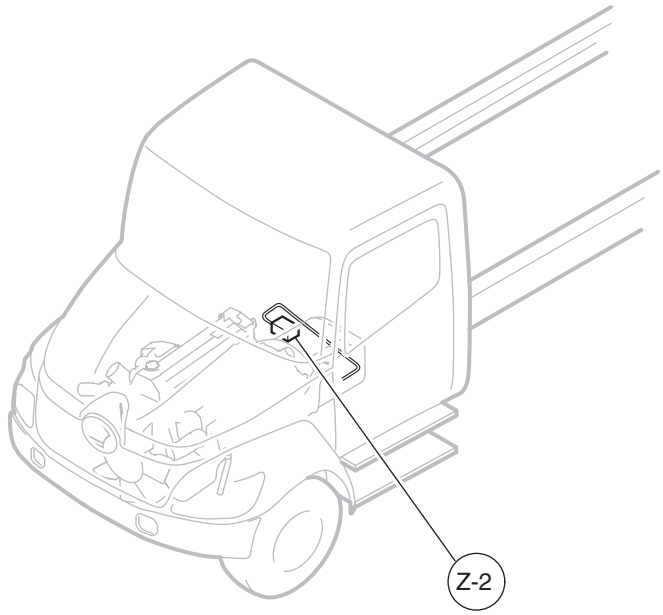


Z-2: Neutral switch

SAPH12Z080200199

Position of connectors L,AM,AU,AY

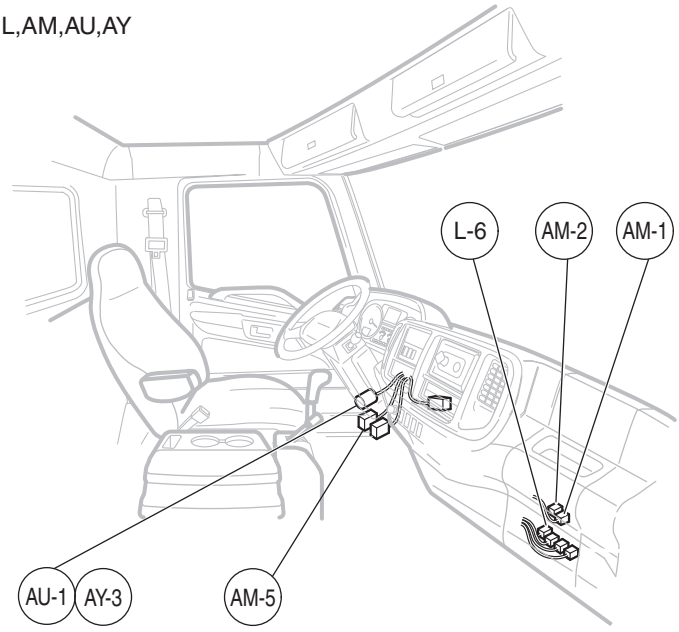


L-6: Stop light relay
AM-1: ABS ECU E
AM-2: ABS ECU F

AM-5: ABS diagnosis switch

AU-1: Diagnosis connector (9P)
AY-3: Diagnosis connector (9P)

SAPH12Z080200200

Position of connectors AG,AH,AI,AJ,AT,AY,AZ,BB

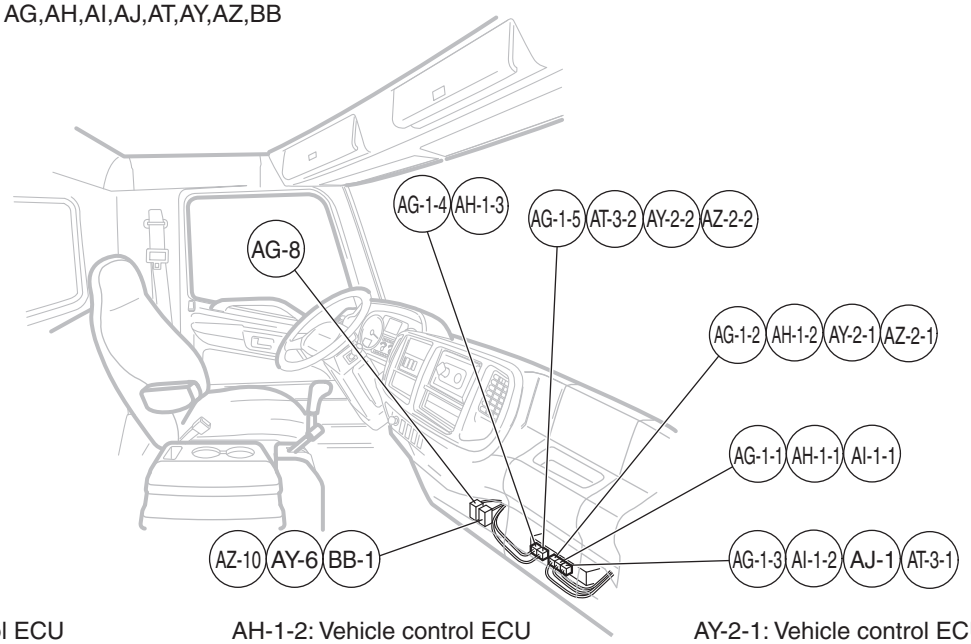


AG-1-1: Vehicle control ECU
AG-1-2: Vehicle control ECU
AG-1-3: Vehicle control ECU
AG-1-4: Vehicle control ECU
AG-1-5: Vehicle control ECU
AG-8: Actuator J/C No.2
AH-1-1: Vehicle control ECU
AH-1-2: Vehicle control ECU
AH-1-3: Vehicle control ECU
AI-1-1: Vehicle control ECU
AI-1-2: Vehicle control ECU
AJ-1: Vehicle control ECU
AT-3-1: Vehicle control ECU
AT-3-2: Vehicle control ECU
AY-2-1: Vehicle control ECU
AY-2-2: Vehicle control ECU
AY-6: Telematics unit
AZ-2-1: Vehicle control ECU
AZ-2-2: Vehicle control ECU
AZ-10: Telematics unit
BB-1:Telematics unit

SAPH12Z080200201

Position of connector H,AE,AL,AZ,BA

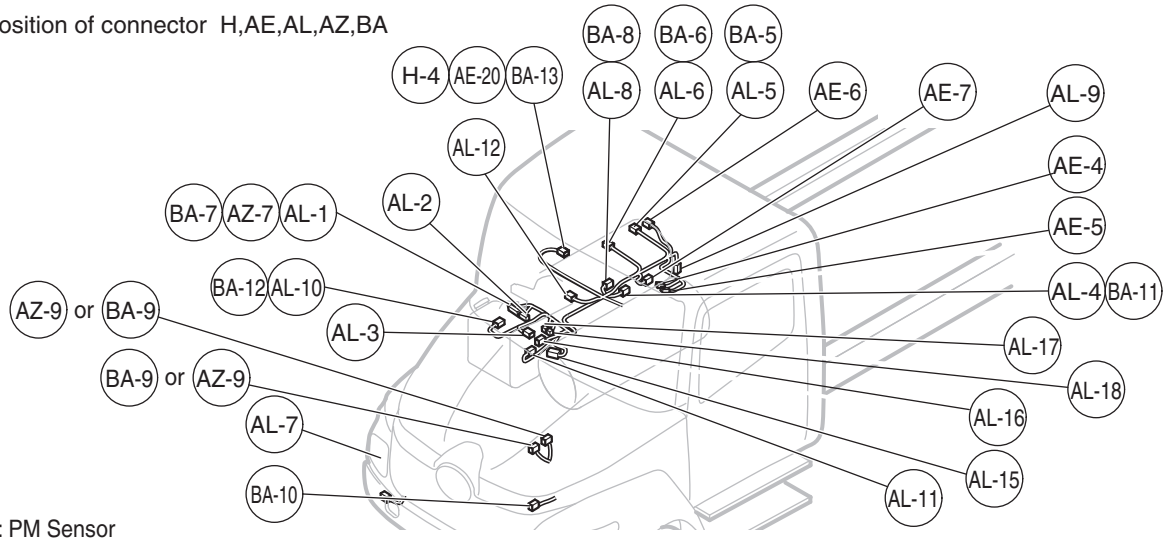


H-4: PM Sensor
AE-4: Exhaust gas temperature sensor 3 (DOC inlet)
AE-5: Exhaust gas temperature sensor 4 (DPR inlet)
AE-6: Exhaust gas temperature sensor 5 (DPR outlet)
AE-7: Differential pressure sensor
AE-20: PM Sensor
AL-1: Dosing control unit 53P
AL-2: Dosing control unit 86P
AL-3: DEF pump
AL-4: Common rail CAN J/C No.4
AL-5: NOx sensor 1
AL-6: NOx sensor 2
AL-7: Ambient air temperature sensor
AL-8: Common rail CAN J/C No.1
AL-9: DEF dosing valve
AL-10: DEF sensor
AL-11: Coolant cut off valve
AL-12: Exhaust gas temperature sensor (SCR inlet)
AL-15: External resistance
AL-16: DEF heater 1
AL-17: DEF heater 2
AL-18: DEF heater 3
AZ-7: Dosing control unit 53P
AZ-9: V J/C
BA-5: NOx sensor 1
BA-6: NOx sensor 2
BA-7: Dosing control unit 53P
BA-8: Common rail CAN J/C No.1
BA-9: Common rail CAN J/C No.2
BA-10: Common rail CAN J/C No.3
BA-11: Common rail CAN J/C No.4
BA-12: DEF sensor
BA-13: PM sensor

SAPH12Z080200202

Position of connector AM,AX

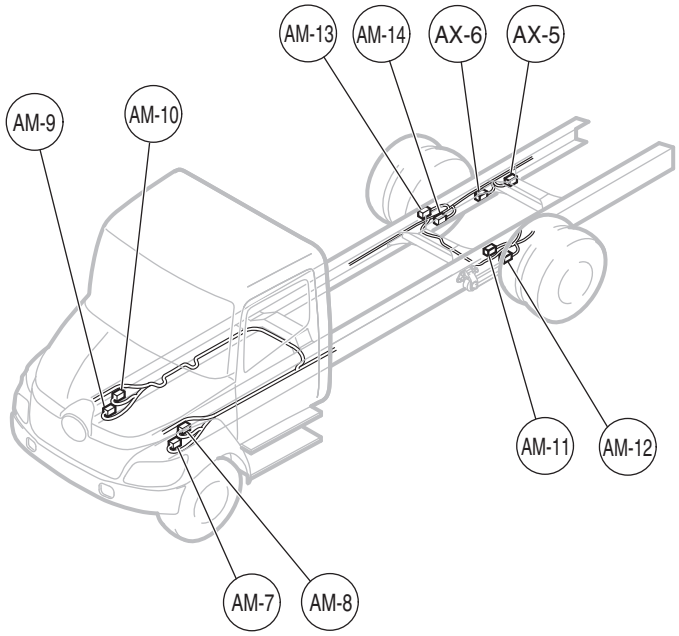


AM-7: Modulator front LH
AM-8: Wheel sensor front LH
AM-9 Modulator front RH
AM-10: Wheel sensor front RH
AM-11: Modulator rear LH
AM-12: Wheel sensor rear LH
AM-13: Modulator rear RH
AM-14: Wheel sensor rear RH
AX-5: Air suspension dump magnetic valve
AX-6: Low pressure switch No.3

SAPH12Z080200203

Position of connector AN

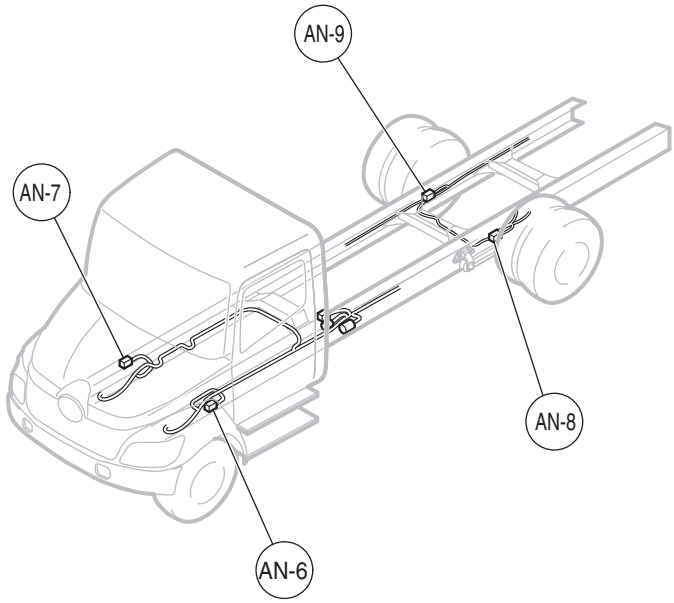


AN-6: Wheel sensor front LH
AN-7: Wheel sensor front RH
AN-8: Wheel sensor rear LH
AN-9: Wheel sensor rear RH

SAPH12Z080200204

Position of connector AN

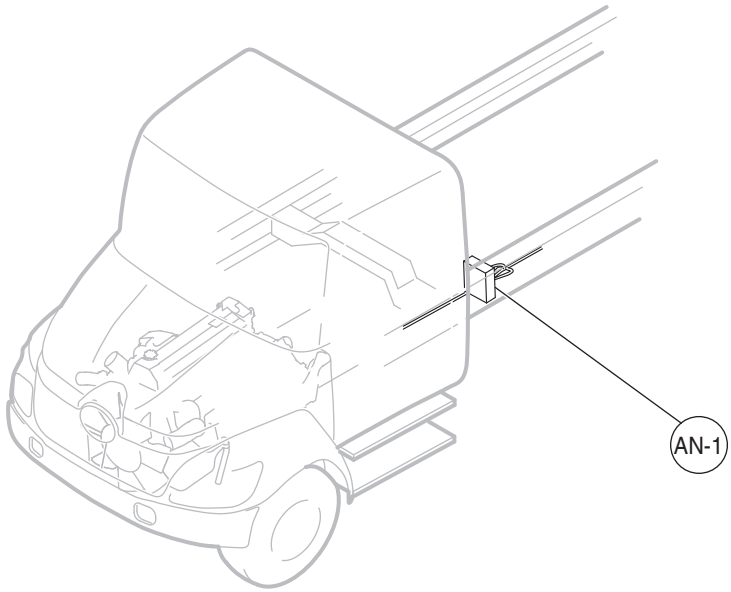


AN-1: ABS HYDRO MAX unit with ECU

SAPH12Z080200205

Position of connector AO

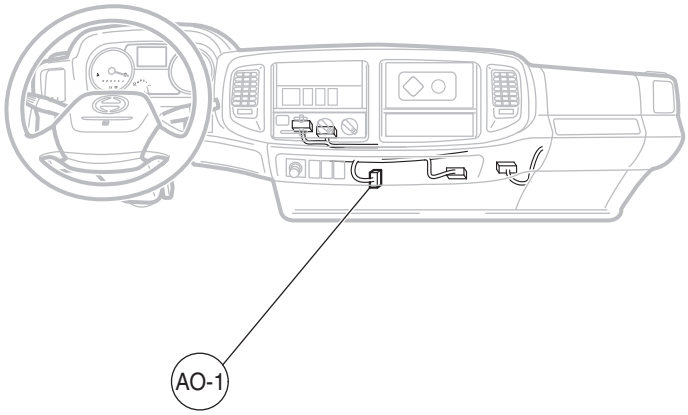


AO-1: Monitor module

SAPH12Z080200206

Position of connectors J,AO

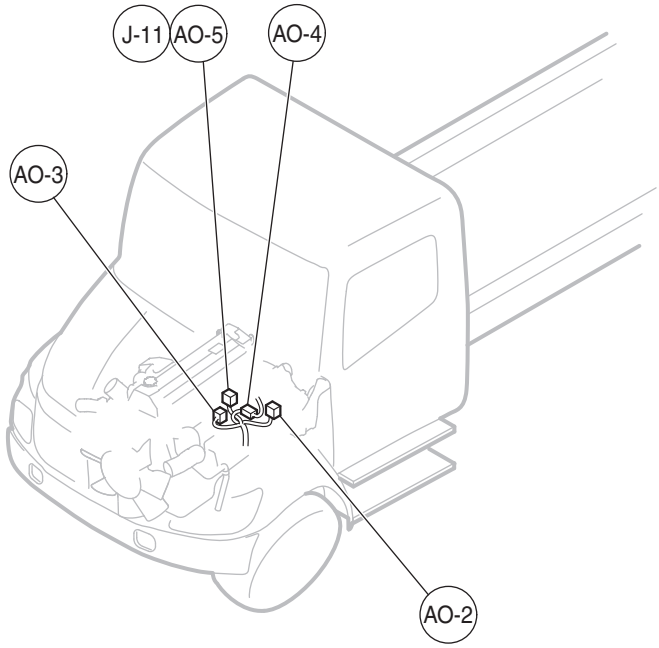


J-11: Differential switch
AO-2: Motor relay
AO-3: Motor pump
AO-4: Flow switch
AO-5: Differential switch

SAPH12Z080200207

Position of connectors AQ,AY

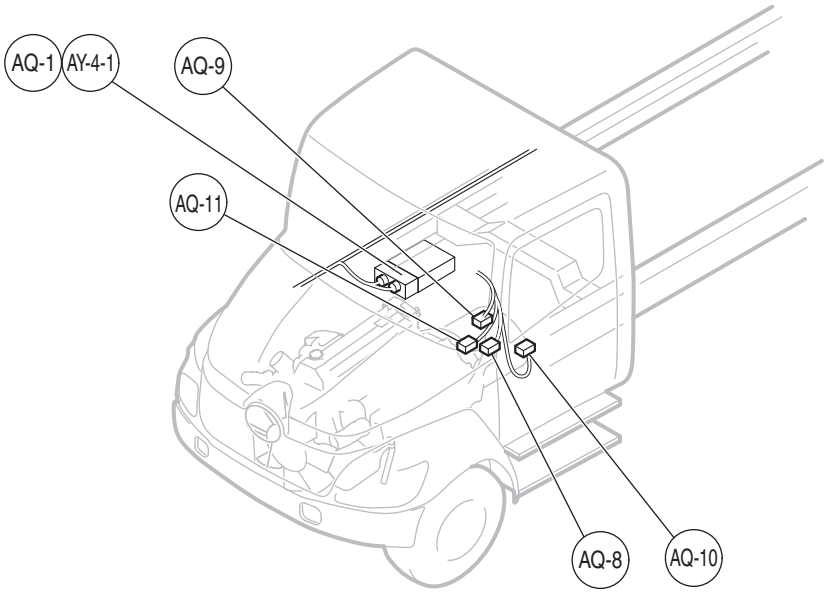


AQ-1: ALLISON 2000 TRANS ECU
AQ-8: Turbine speed sensor
AQ-9: Main transmission
AQ-10: Out put speed sensor
AQ-11: Engine speed sensor
AY-4-1: ALLISON 2000 TRANS ECU

SAPH12Z080200208

Position of connectors AR,AY

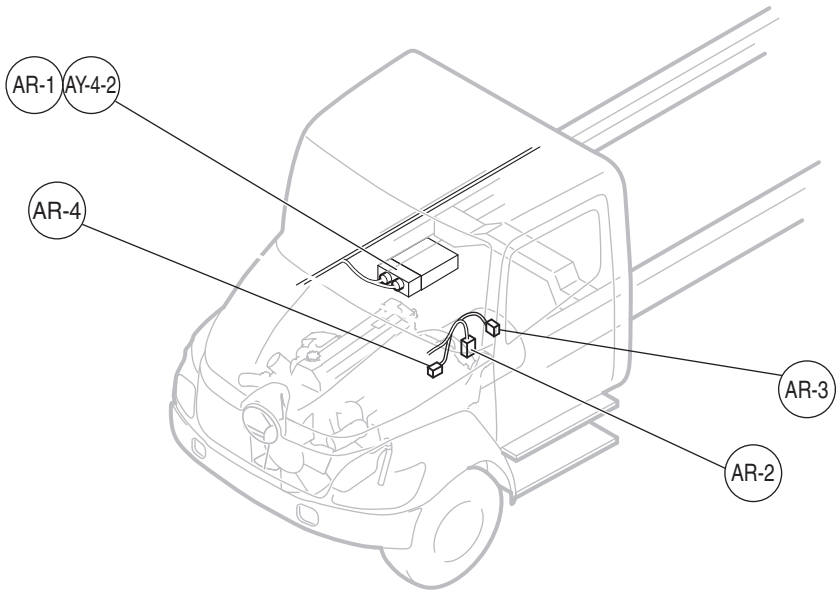


AR-1: ALLISON 3000RDS TRANS ECU
AR-2: MAIN Transmission
AR-3: Output speed sensor
AR-4: Engine speed sensor
AY-4-2: ALLISON 3000RDS TRANS ECU

SAPH12Z080200209

Position of connector AQ

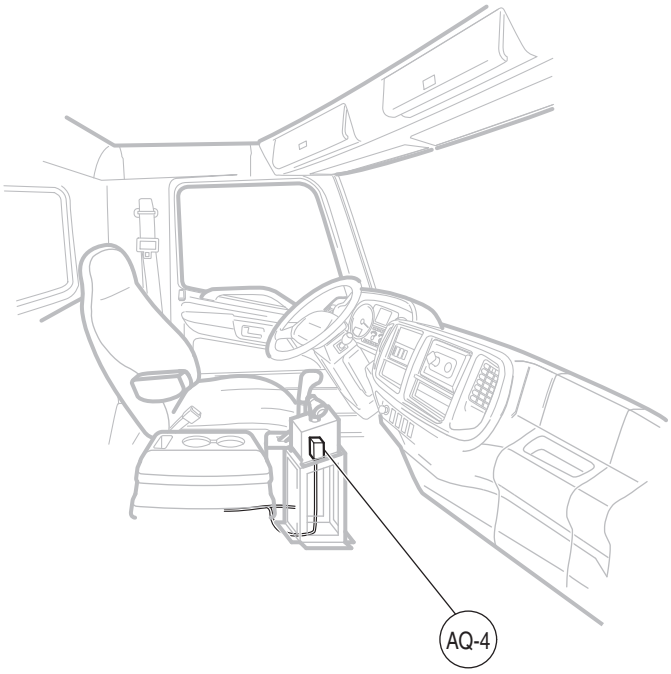


AQ-4: TRANS mode switch

SAPH12Z080200210

Position of connectors AR, AY, BH

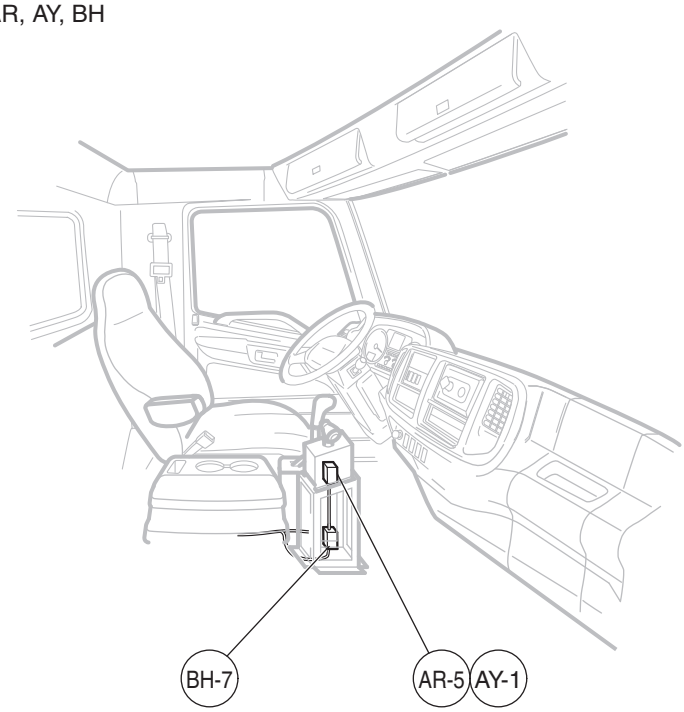


AR-5: Selector
AY-1: Selector
BH-7: Cab main harness to ATshift harness

SAPH12Z080200211

Position of connector AW

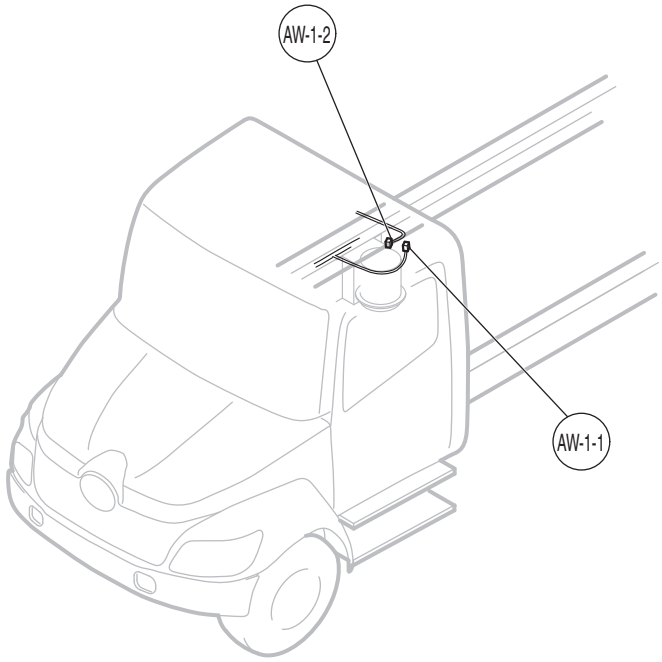


AW-1-1: Air dryer (For HYDRO MAX brake)
AW-1-2: Air dryer (For Full air brake)

SAPH12Z080200212

Position of connectors BG

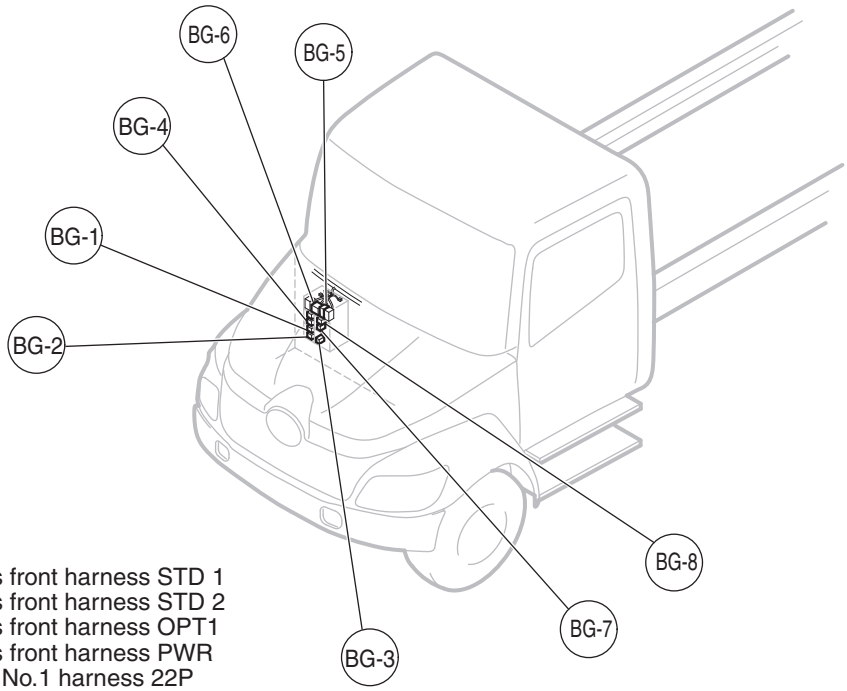


BG-1: Cab main harness to chassis front harness STD 1
BG-2: Cab main harness to chassis front harness STD 2
BG-3: Cab main harness to chassis front harness OPT1
BG-4: Cab main harness to chassis front harness PWR
BG-5: Cab main harness to engine No.1 harness 22P
BG-6: Cab main harness to engine No.1 harness 38P
BG-7: Chassis front harness to engine No.1 harness 6P (GND)
BG-8: Chassis front harness to engine No.1 harness 26P

SAPH12Z080200213

Position of connectors BH

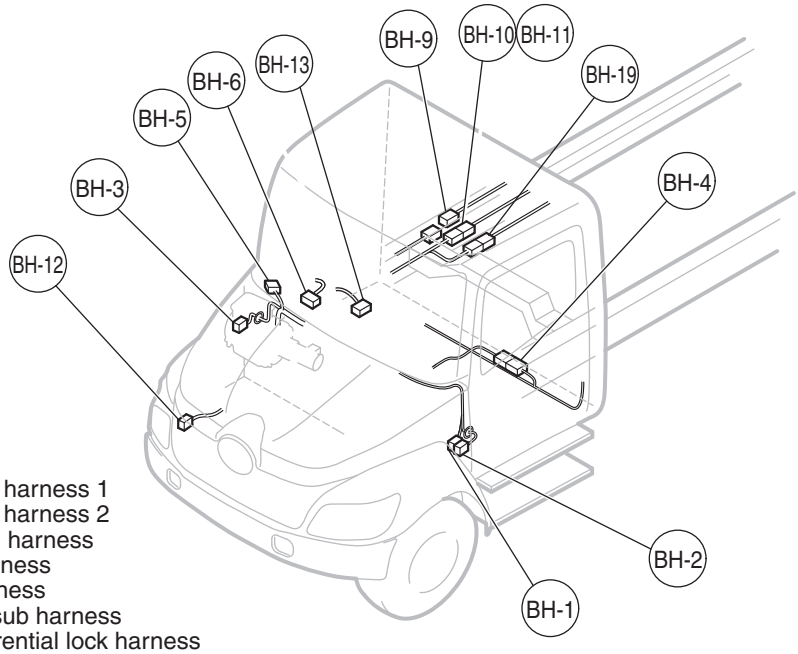


BH-1: Cab main harness to door LH harness 1
BH-2: Cab main harness to door LH harness 2
BH-3: Cab main harness to door RH harness
BH-4: Cab main harness to floor harness
BH-5: Cab main harness to roof harness
BH-6: Cab main harness to flasher sub harness
BH-9: Chassis front harness to differential lock harness
BH-10: Chassis front harness to intermediate harness (For full air brake)
BH-11: Chassis front harness to intermediate harness (For HYDRO MAX brake)
BH-12: Chassis front harness to head light harness
BH-13: Chassis front harness to engine No.2 harness
BH-19: Chassis front harness to intermediate harness (For air suspension dump)

SAPH12Z080200214

Position of connectors BH

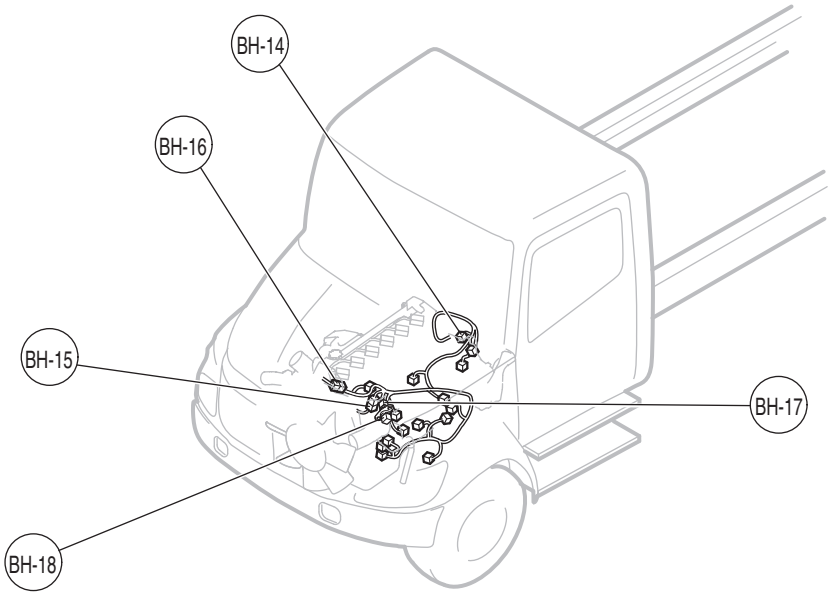


BH-14: Engine No.1 harness to engine No.3 harness glow (Glow plug)
BH-15: Engine No.1 harness to engine No.1 sub harness 12P
BH-16: Engine No.1 harness to engine No.1 sub harness 16P
BH-17: Engine No.1 harness to link-up connector
BH-18: Link-up connector to injector harness

SAPH12Z080200215

Position of connectors BH

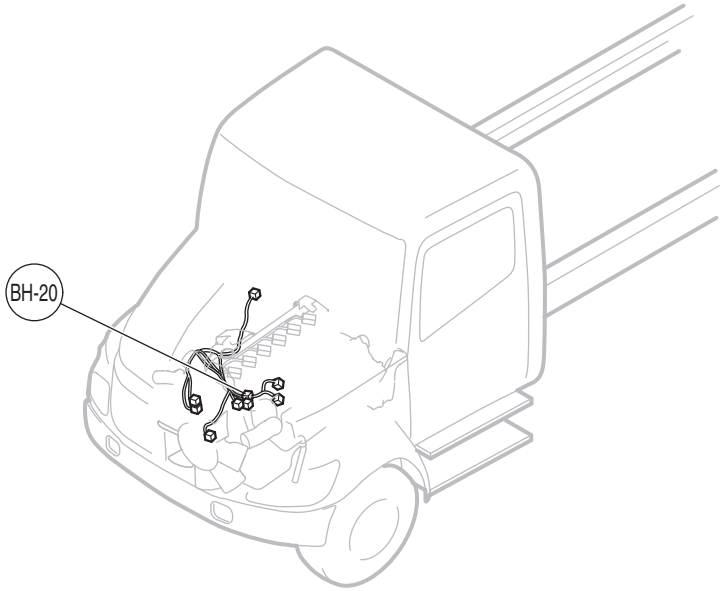


BH-20: Engine sub harness RH to fuel sub harness

SAPH12Z080200216

Position of connector BH

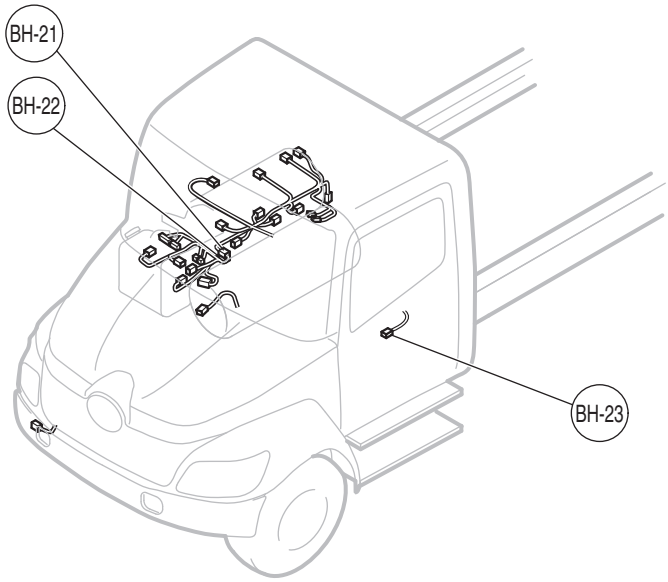


BH-21: Muffler harness front to rear A
BH-22: Muffler harness front to rear B
BH-23: Chassis front harness (Starter relay) to starter harness

SAPH12Z080200217

Position of connectors BI

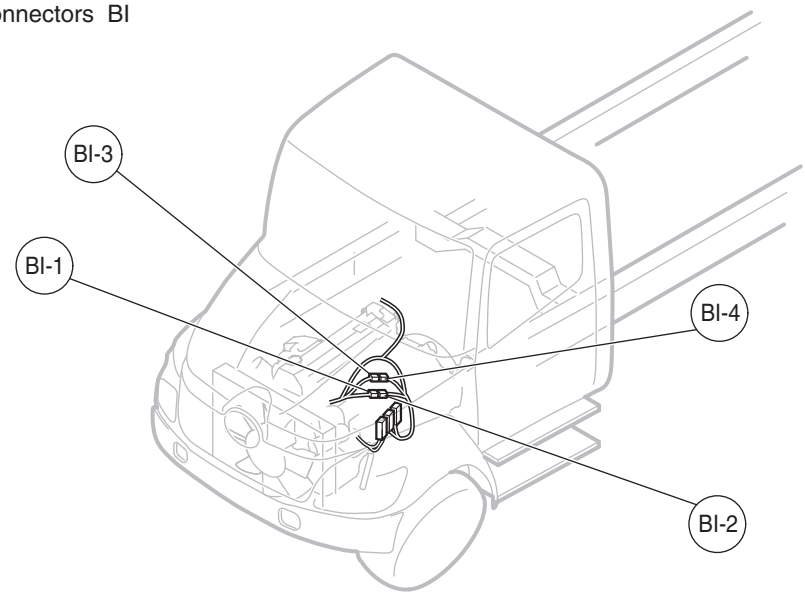


BI-1: Signal check connector No.1
BI-2: Signal check connector No.2
BI-3: Signal check connector No.3
BI-4: Signal check connector No.4

SAPH12Z080200218

# CONNECTOR

EN12Z0802J100006

Connector : A-2
Color : Black
Part No. : 82824-E0U10

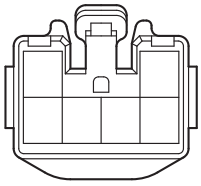

Connector : A-10
Color : Dark Gray
Part No. : 82560-3830

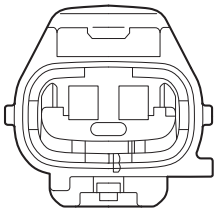

Connector : B-1
Color : White
Part No. : 82560-2430

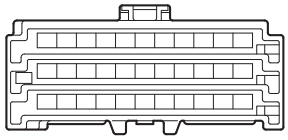

Connector : B-3
Color : White
Part No. : 82560-2470

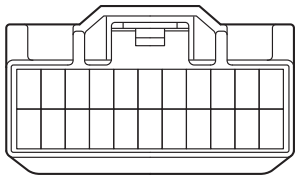

Connector : B-4
Color : White
Part No. : 82824-E0U90

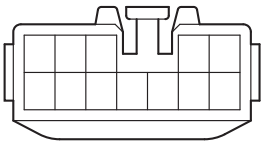

Connector : B-6
Color : Black
Part No. : 82580-6730

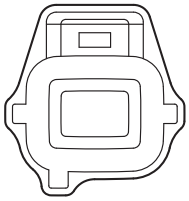

Connector : B-7
Color : Black
Part No. : 82580-6730

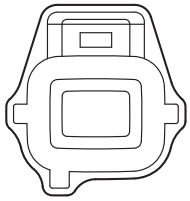

Connector : B-8
Color : Dark Gray
Part No. : 82560-3030

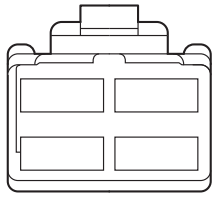

Connector : B-9
Color : ------
Part No. : 97840-4050

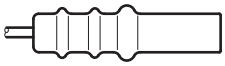

Connector : B-10
Color : ------
Part No. : 97840-4050

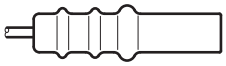

Connector : B-11
Color : Gray
Part No. : 82560-2550

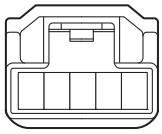

Connector : D-1
Color : Black
Part No. : S8281-E0730

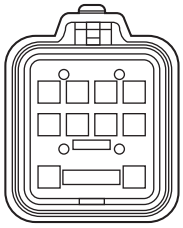

Connector : D-2
Color : ------
Part No. : 98060-5010

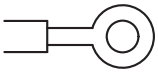

Connector : D-3
Color : ------
Part No. : 98060-5010

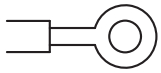

Connector : D-4
Color : ------
Part No. : 98060-5010

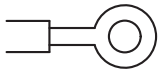

Connector : D-5
Color : ------
Part No. : 98060-5010

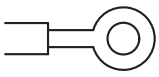

Connector : E-1
Color : ------
Part No. : 98060-6010

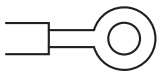

SAPH12Z080200219

Connector : F-1
Color : Blue
Part No. : 82824-E0U10

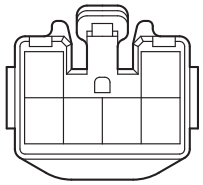

Connector : F-2
Color : ------
Part No. : 97840-4050

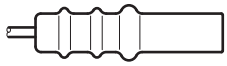

Connector : F-3
Color : ------
Part No. : 97840-4050

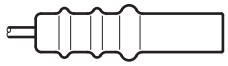

Connector : F-4
Color : White
Part No. : 82560-2430

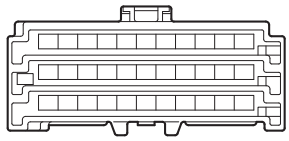

Connector : F-5
Color : Black
Part No. : S8281-E0D80

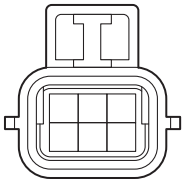

Connector : F-6
Color : White
Part No. : 82824-E0K90

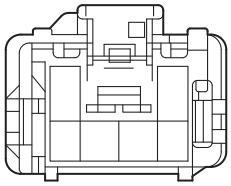

Connector : F-7
Color : Black
Part No. : S8281-E0D80

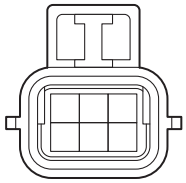

Connector : G-1
Color : ------
Part No. : 97840-4050

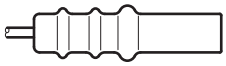

Connector : G-2
Color : ------
Part No. : 97840-4050

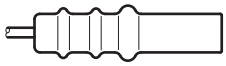

Connector : H-1
Color : White
Part No. : 82824-E0U90

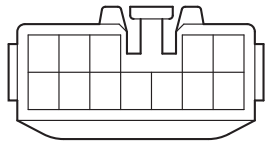

Connector : H-2
Color : White
Part No. : 82560-2430

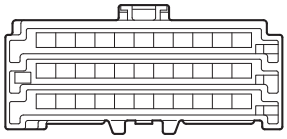

Connector : H-3
Color : White
Part No. : 82550-1360

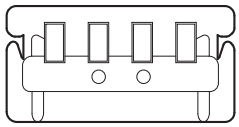

Connector : H-4
Color : Black
Part No. : S8281-E0F40

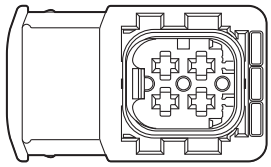

Connector : I-1-1
Color : Black
Part No. : 82824-E0P30

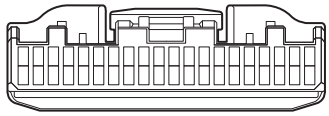

Connector : I-1-2
Color : Black
Part No. : 82824-E0P40

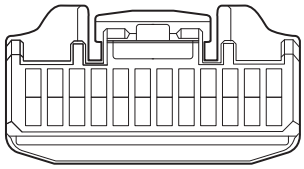

Connector : I-1-3
Color : Black
Part No. : 82824-E0P50

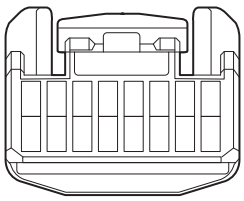

Connector : I-2
Color : Gray
Part No. : 82824-E0U10

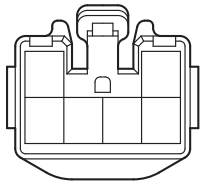

Connector : I-3
Color : White
Part No. : 82560-2430

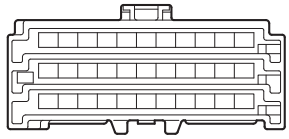

SAPH12Z080200220

Connector : I-4
Color : White
Part No. : 82560-2470

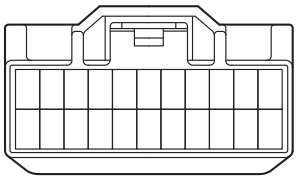

Connector : I-5
Color : White
Part No. : 82560-2430

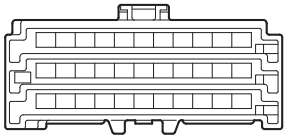

Connector : I-6
Color : Black
Part No. : 82560-1100

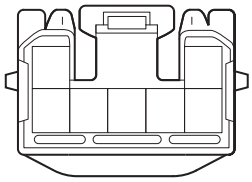

Connector : I-7
Color : White
Part No. : 82824-R0U80

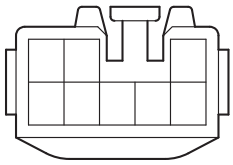

Connector : I-8
Color : White
Part No. : 82560-4180, 85902-1210

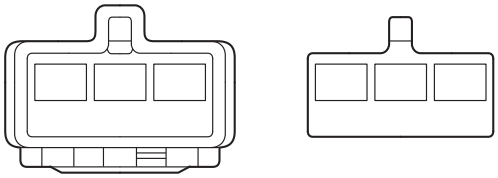

Connector : I-10
Color : Black
Part No. : 82560-2940

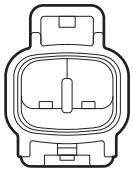

Connector : I-11
Color : White
Part No. : 82550-1360

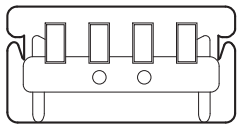

Connector : I-12
Color : White
Part No. : 82824-E0U90

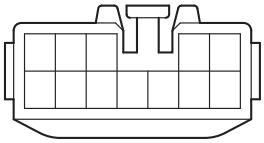

Connector : I-13
Color : White
Part No. : 82550-1360

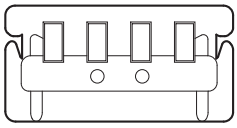

Connector : I-14
Color : Gray
Part No. : 82580-4860, 85902-1100

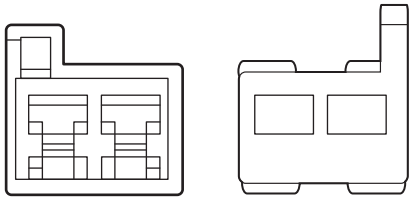

Connector : J-1
Color : Black
Part No. : 82560-1990

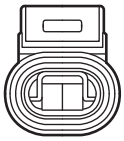

Connector : J-2
Color : Black
Part No. : 82560-1990

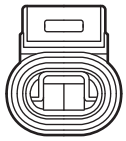

Connector : J-3
Color : Black
Part No. : 82560-3190

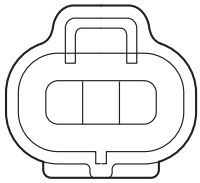

Connector : J-4
Color : Black
Part No. : 82560-3190

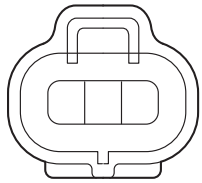

Connector : J-5
Color : Dark Gray
Part No. : 82560-4350

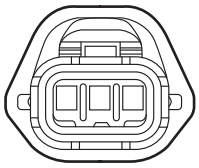

Connector : J-6
Color : Black
Part No. : S8281-E0A40

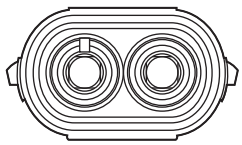

SAPH12Z080200221

Connector : J-7
Color : Black
Part No. : 82580-9250

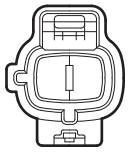

Connector : J-8
Color : Gray
Part No. : 82580-7180

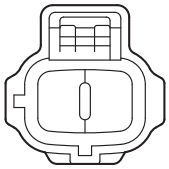

Connector : J-9
Color : Dark Gray
Part No. : 82580-9970

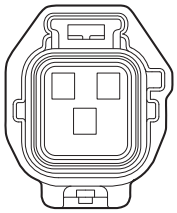

Connector : J-10
Color : Dark Gray
Part No. : 82580-6770

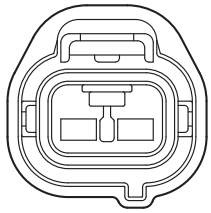

Connector : J-11
Color : Black
Part No. : 82560-2530



Connector : J-12
Color : Black
Part No. : 82580-6820

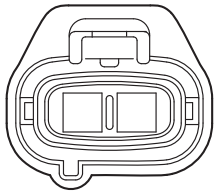

Connector : J-13
Color : Dark Gray
Part No. : 82560-4350

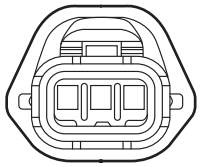

Connector : K-4-1
Color : Black
Part No. : 82580-7380

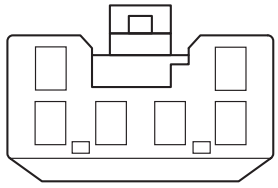

Connector : K-4-2
Color : Black
Part No. : 82824-E0Y50

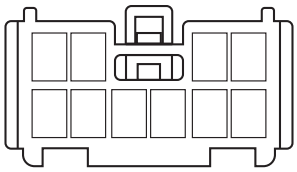

Connector : K-6
Color : Black
Part No. : 82580-9310

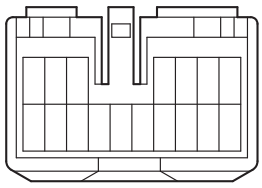

Connector : K-7
Color : Black
Part No. : 82580-2160

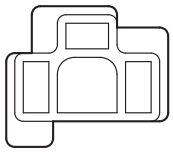

Connector : K-8
Color : Black
Part No. : 82580-2160

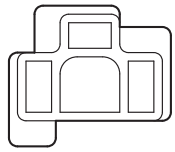

Connector : K-9
Color : White
Part No. : 82560-2430

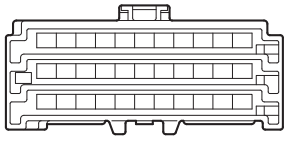

Connector : K-10
Color : Black
Part No. : 82580-9310

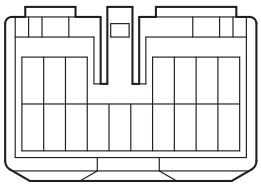

Connector : K-11
Color : White
Part No. : 82580-9460

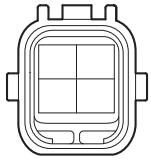

Connector : K-12
Color : White
Part No. : 82580-9460

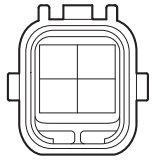

Connector : K-13
Color : Black
Part No. : 82580-7320

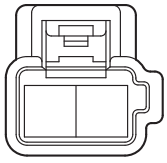

Connector : K-14
Color : Black
Part No. : 82580-7320

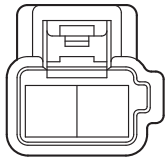

SAPH12Z080200222

Connector : K-15
Color : Black
Part No. : 82580-7320

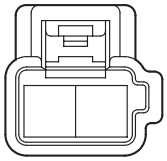

Connector : K-16
Color : Black
Part No. : 82580-7320

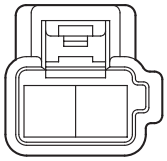

Connector : K-17
Color : Black
Part No. : 82580-7320

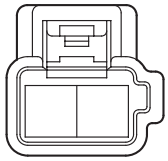

Connector : K-18
Color : White
Part No. : 82560-2430

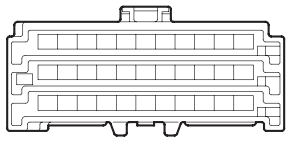

Connector : L-1
Color : Black
Part No. : 82824-E0U90

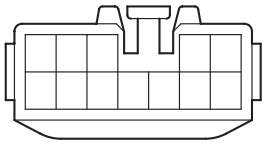

Connector : L-2
Color : White
Part No. : 82580-9320

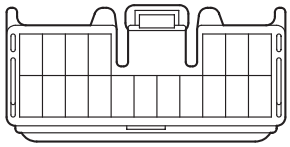

Connector : L-3
Color : Black
Part No. : 82580-9310

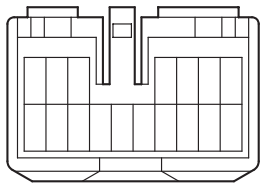

Connector : L-4
Color : White
Part No. : 82560-2430

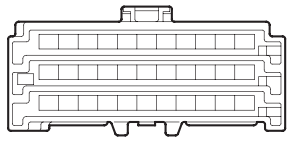

Connector : L-5
Color : White
Part No. : 82824-E0U90

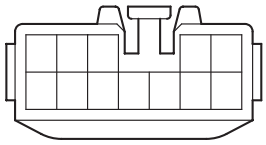

Connector : L-6
Color : White
Part No. : 82560-3050

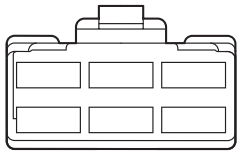

Connector : L-7
Color : White
Part No. : 82560-2430

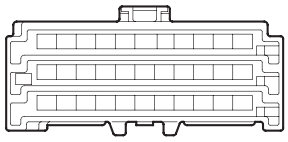

Connector : L-8-1
Color : Black
Part No. : 82560-3030

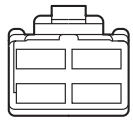

Connector : L-8-2
Color : Black
Part No. : 82828-1310

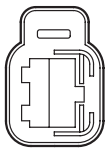

Connector : L-9
Color : Black
Part No. : 82560-3800, 85902-1200

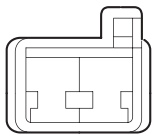

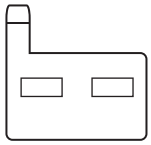

Connector : L-10-1
Color : Gray
Part No. : S8281-E0D60

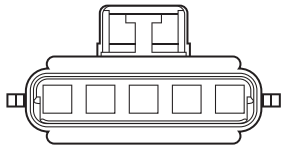

Connector : L-10-2
Color : Black
Part No. : S8281-E0D70

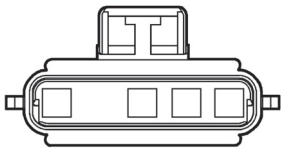

Connector : L-11
Color : Gray
Part No. : 82580-6770

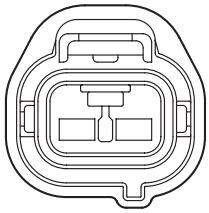

SAPH12Z080200223

Connector : L-12
Color : Black
Part No. : 82560-1730

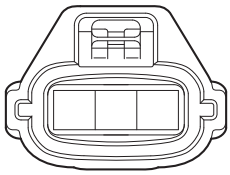

Connector : L-13
Color : Black
Part No. : 82560-1730

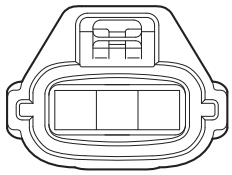

Connector : L-14
Color : Gray
Part No. : 82580-6770

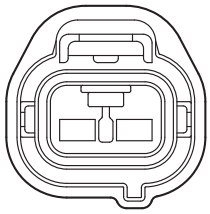

Connector : L-15
Color : Black
Part No. : S8281-E0D70

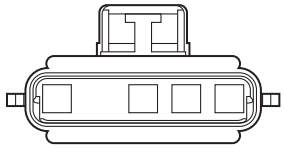

Connector : L-16
Color : Black
Part No. : 82828-1210

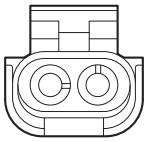

Connector : L-17
Color : Black
Part No. : 82580-6820

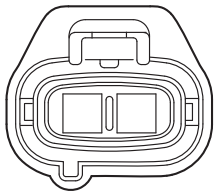

Connector : L-18
Color : Black
Part No. : S8281-E0D80

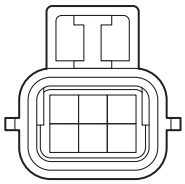

Connector : M-1
Color : White
Part No. : 82580-3360

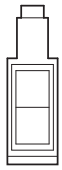

Connector : M-2
Color : White
Part No. : 82580-3360

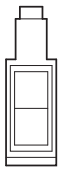

Connector : M-3
Color : White
Part No. : 82580-6170

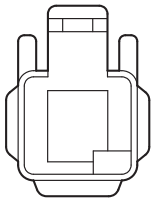

Connector : M-4
Color : White
Part No. : 82580-6170

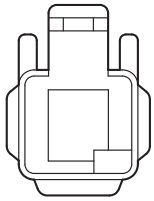

Connector : M-5
Color : White
Part No. : 82580-5970

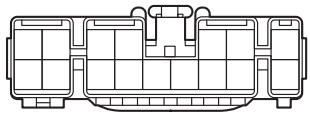

Connector : N-1
Color : White
Part No. : 82560-2990

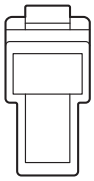

Connector : N-2
Color : Black
Part No. : 82580-5820

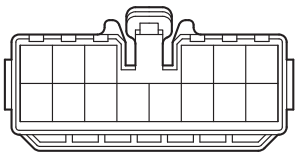

Connector : N-3
Color : White
Part No. : 82580-8350

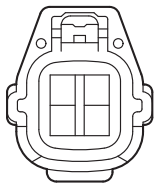

Connector : N-4
Color : White
Part No. : 82580-9320

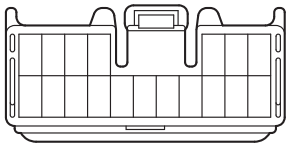

Connector : O-1
Color : White
Part No. : 82824-E0U10

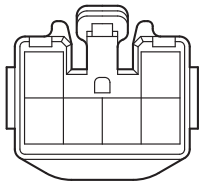

SAPH12Z080200224

Connector : O-3
Color : White
Part No. : 82580-9460

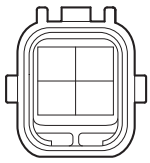

Connector : O-4
Color : White
Part No. : 82580-9460

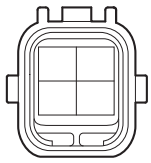

Connector : P-1
Color : White
Part No. : 82824-E0T70

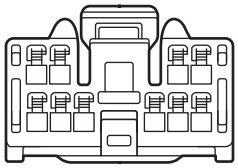

Connector : P-2
Color : Black
Part No. : 82580-9460

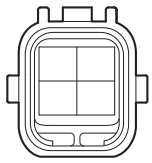

Connector : P-3
Color : Black
Part No. : 82580-9460

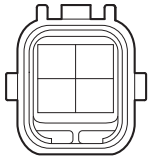

Connector : Q-2
Color : White
Part No. : 82824-E0U50

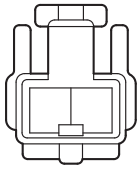

Connector : Q-3-1
Color : Black
Part No. : 82580-7590

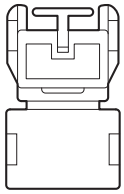

Connector : Q-3-2
Color : Black
Part No. : 82580-7590

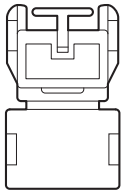

Connector : Q-4-1
Color : Black
Part No. : 82580-7590

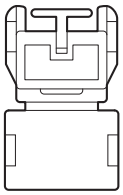

Connector : Q-4-2
Color : Black
Part No. : 82580-7590

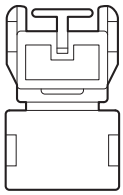

Connector : R-2
Color : Black
Part No. : 82824-E0U00

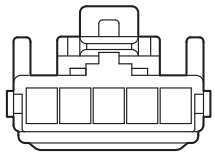

Connector : R-3
Color : Black
Part No. : 82580-9250

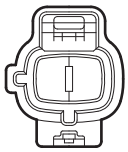

Connector : R-4
Color : White
Part No. : 82550-1360

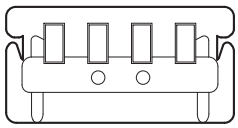

Connector : S-1
Color : White
Part No. : 82580-4610

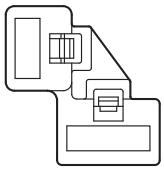

Connector : T-1
Color : White
Part No. : 82580-7210

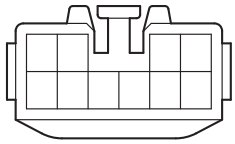

Connector : T-2
Color : White
Part No. : 82580-6250

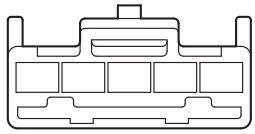

SAPH12Z080200225

Connector : T-3
Color : Gray
Part No. : 82580-9420

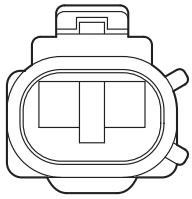

Connector : T-4
Color : Black
Part No. : 82560-4400

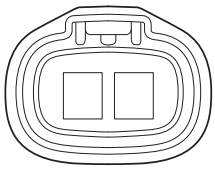

Connector : U-1
Color : White
Part No. : 82824-E0T80

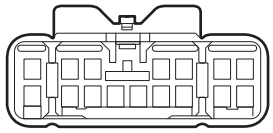

Connector : U-2
Color : White
Part No. : 82580-5970

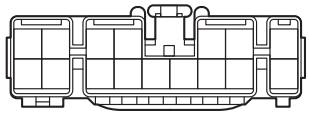

Connector : U-3
Color : Gray
Part No. : 82580-9420

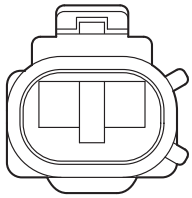

Connector : U-4
Color : White
Part No. : 82580-7660

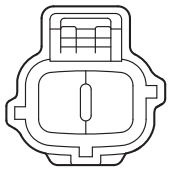

Connector : U-5
Color : Black
Part No. : 82824-E0U10

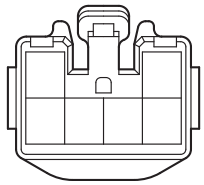

Connector : U-6
Color : Black
Part No. : 82560-3300

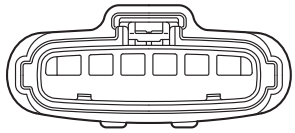

Connector : V-2
Color : White
Part No. : 82824-E0V20

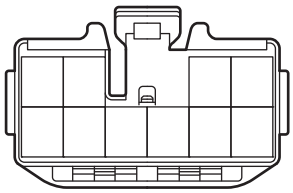

Connector : V-3
Color : Black
Part No. : 82580-8610

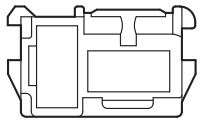

Connector : V-4
Color : Black
Part No. : 82580-8610

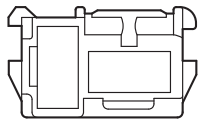

Connector : V-5
Color : White
Part No. : 82560-2430

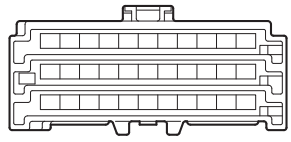

Connector : V-6
Color : White
Part No. : 82560-2430

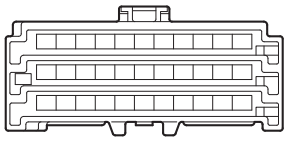

Connector : W-2
Color : Black
Part No. : 82824-E0U80

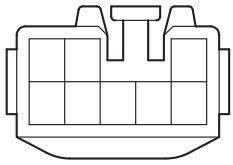

Connector : W-3
Color : Black
Part No. : 82824-E0T40

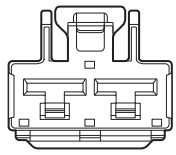

Connector : W-4
Color : Black
Part No. : 82560-4480

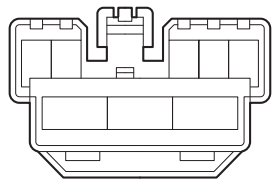

Connector : W-5
Color : White
Part No. : 82560-2400

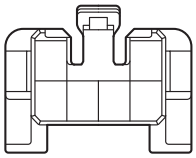

SAPH12Z080200226

Connector : W-7
Color : Gray
Part No. : 82580-6770

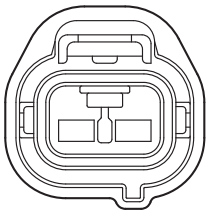

Connector : W-8
Color : Black
Part No. : 82580-6570

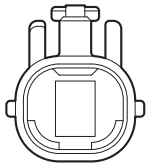

Connector : W-9
Color : White
Part No. : 82560-2430

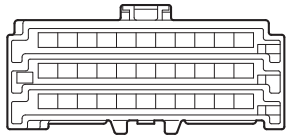

Connector : X-1
Color : White
Part No. : 82560-2430

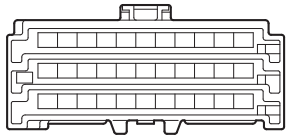

Connector : X-2
Color : Black
Part No. : 82560-3300

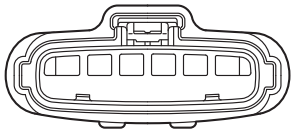

Connector : X-3
Color : White
Part No. : 82560-2430

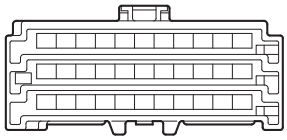

Connector : Y-7-1
Color : Black
Part No. : S8281-E0810

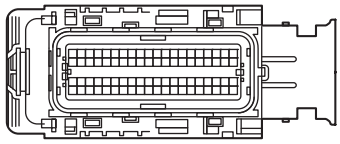

Connector : Y-7-2
Color : Black
Part No. : S8281-E0410

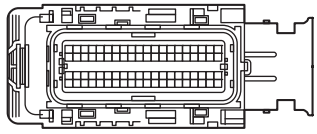

Connector : Y-7-3
Color : Black
Part No. : S8281-E0F70

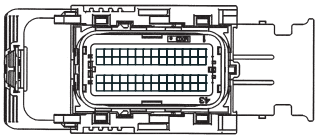

Connector : Y-8
Color : Black
Part No. : 82580-6830

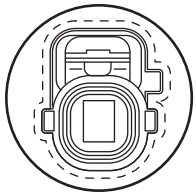

Connector : Y-9
Color : Black
Part No. : 82580-7990

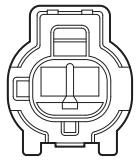

Connector : Y-10
Color : Black
Part No. : 82580-7990

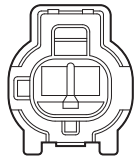

Connector : Y-11
Color : Black
Part No. : 82580-7990

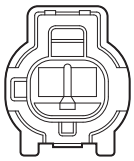

Connector : Y-12
Color : Black
Part No. : 82580-7990

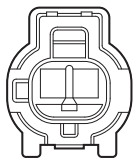

Connector : Y-13
Color : Black
Part No. : 82580-7990

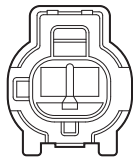

Connector : Y-14
Color : Black
Part No. : 82580-7990

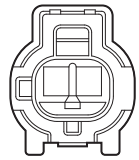

Connector : Y-15
Color : Dark Gray
Part No. : 82580-8260

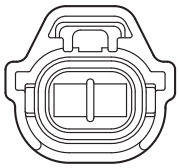

Connector : Y-16
Color : Black
Part No. : 82580-9960

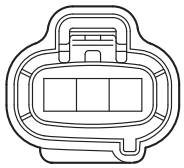

Connector : Y-17
Color : Black
Part No. : 82560-1230

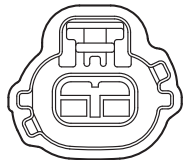

SAPH12Z080200227

Connector :Y-18
Color : Gray
Part No. : 82580-8760

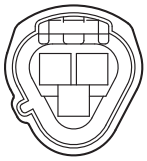

Connector : Y-19
Color : Gray
Part No. : 82580-7120

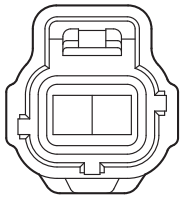

Connector : Y-20
Color : Gray
Part No. : 82824-E0N70

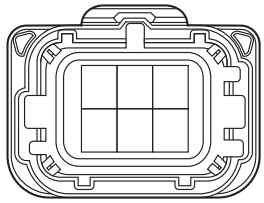

Connector : Y-21
Color : Dark Gray
Part No. : 82580-7800

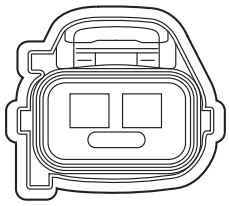

Connector : Y-22
Color : Black
Part No. : 82580-8980

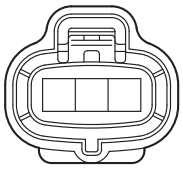

Connector : Y-23
Color : Dark Gray
Part No. : 82580-7800

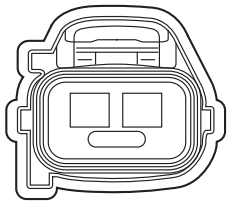

Connector : Y-24
Color : Dark Gray
Part No. : 82580-7800

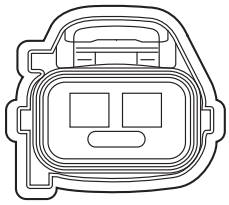

Connector : Y-25
Color : Black
Part No. : 82828-1630

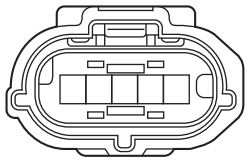

Connector :Y-26
Color : Gray
Part No. : 82580-8760

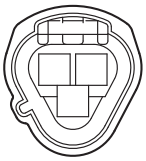

Connector : Y-27
Color : Black
Part No. : 82560-1260

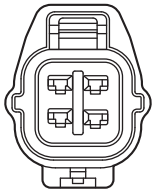

Connector : Y-28
Color : Dark Gray
Part No. : 82824-E0X10

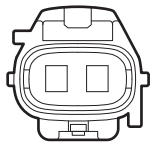

Connector : Z-1
Color : White
Part No. : 82560-2470

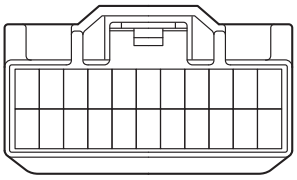

Connector : Z-2
Color : Gray
Part No. : 82828-1200

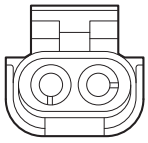

Connector : Z-3
Color : Black
Part No. : 82580-9250

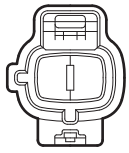

Connector : Z-4-1
Color : Black
Part No. : S8281-E0410

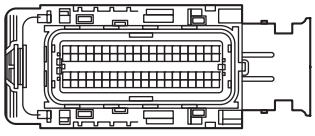

Connector : Z-4-2
Color : Black
Part No. : S8281-E0F70

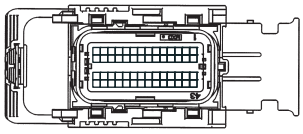

Connector : AA-1-1
Color : Black
Part No. : S8281-E0410

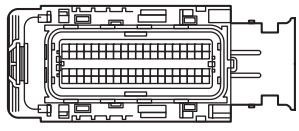

Connector : AA-1-2
Color : Black
Part No. : S8281-E0F70

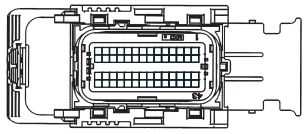

SAPH12Z080200228

Connector : AA-2
Color : Black
Part No. : 82580-9250

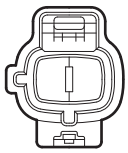

Connector : AA-3
Color : White
Part No. : 82560-2470

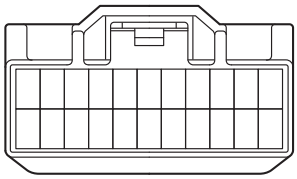

Connector : AA-5
Color : Black
Part No. : 82824-E0U80

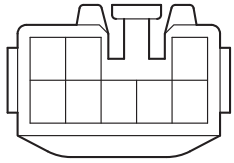

Connector : AC-1
Color : ------
Part No. : 97840-4050

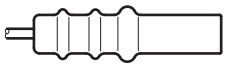

Connector : AC-2
Color : ------
Part No. : 97840-4050

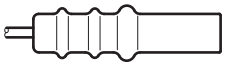

Connector : AC-3
Color : ------
Part No. : 97840-4050

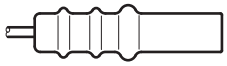

Connector : AC-4
Color : ------
Part No. : 97840-4050

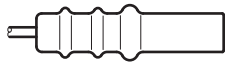

Connector : AC-5
Color : Black
Part No. : 82560-3300

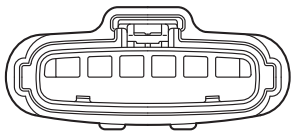

Connector : AC-6
Color : Black
Part No. : 82560-1260

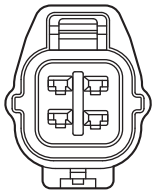

Connector : AC-7-1
Color : Black
Part No. : S8281-E0410

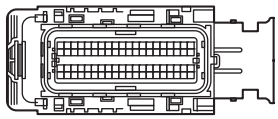

Connector : AC-7-2
Color : Black
Part No. : S8281-E0F70

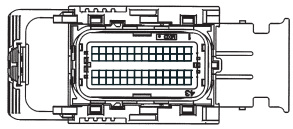

Connector : AD-1
Color : Black
Part No. : S8281-E0810

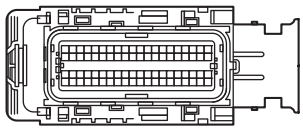

Connector : AD-2
Color : Brown
Part No. : 82828-1430

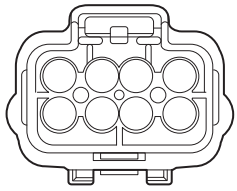

Connector : AD-3
Color : Black
Part No. : 82560-3560

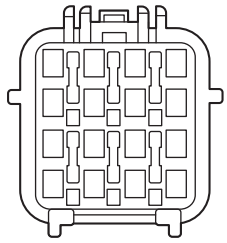

Connector : AD-4
Color : Dark Gray
Part No. : S8281-E0800

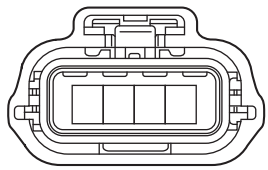

Connector : AE-1
Color : Black
Part No. : 82824-E0U80

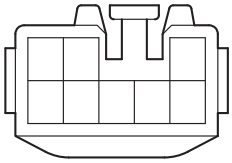

SAPH12Z080200229

Connector : AE-2
Color : White
Part No. : 82560-2470

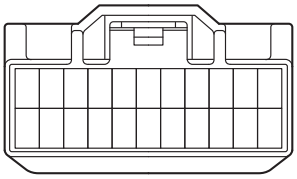

Connector : AE-3
Color : Dark Gray
Part No. : 82560-3980

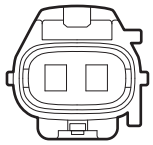

Connector : AE-4
Color : Dark Gray
Part No. : 82560-3980

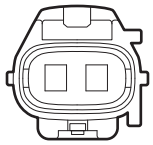

Connector : AE-5
Color : Dark Gray
Part No. : 82824-E0X10

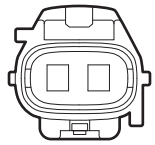

Connector : AE-6
Color : Dark Gray
Part No. : 82560-3980

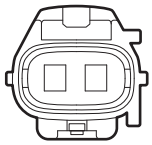

Connector : AE-7
Color : Black
Part No. : 82560-3190

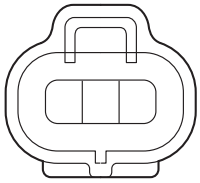

Connector : AE-8
Color : Black
Part No. : 82560-1260

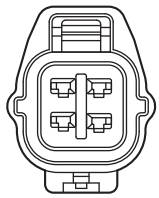

Connector : AE-9-1
Color : Black
Part No. : S8281-E0810

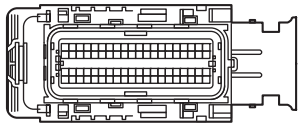

Connector : AE-9-2
Color : Black
Part No. : S8281-E0410

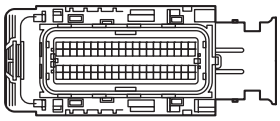

Connector : AE-9-3
Color : Black
Part No. : S8281-E0F70

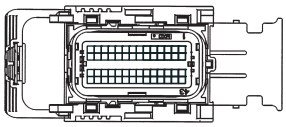

Connector : AE-10
Color : White
Part No. : 82560-2430

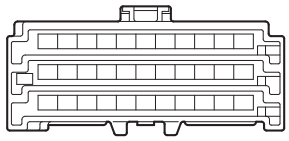

Connector : AE-12
Color : Black
Part No. : 82560-3300

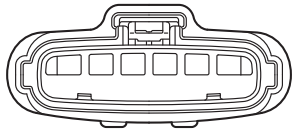

Connector : AE-13
Color : Gray
Part No. : 82580-8760

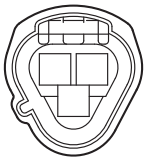

Connector : AE-14
Color : Black
Part No. : 82828-1630

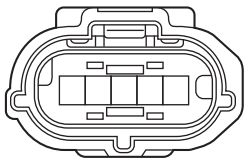

Connector : AE-15
Color : Gray
Part No. : 82580-8980

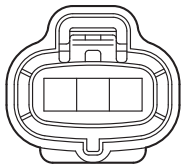

Connector : AE-16
Color : Brown
Part No. : S8281-E0870

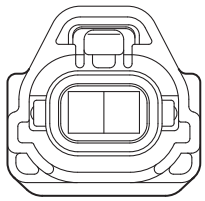

Connector : AE-17
Color : Black
Part No. : 82560-3560

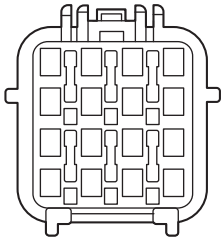

Connector : AE-18
Color : Black
Part No. : 82580-8980

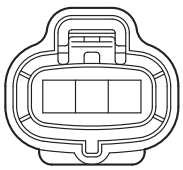

Connector : AE-19
Color : Gray
Part No. : 82580-6860

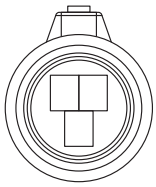

Connector : AE-20
Color : White
Part No. : S8281-E0F40

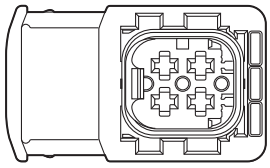

SAPH12Z080200230

Connector : AF-1
Color : White
Part No. : 82560-3030

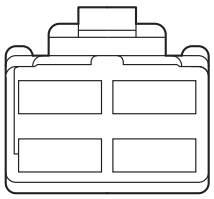

Connector : AF-2
Color : Black
Part No. : 82580-6820

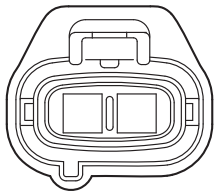

Connector : AF-3
Color : White
Part No. : 82560-2470

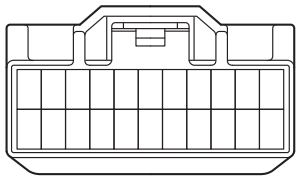

Connector : AF-4
Color : Black
Part No. : S8281-E0410

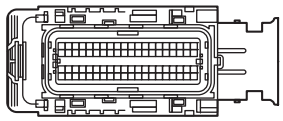

Connector : AG-1-1
Color : White
Part No. : 82824-E0090

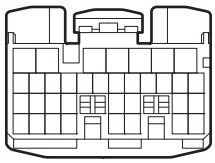

Connector : AG-1-2
Color : Black
Part No. : 82824-E0070

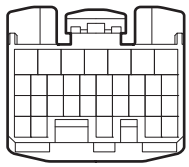

Connector : AG-1-3
Color : Black
Part No. : 82824-E0080

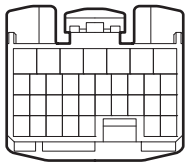

Connector : AG-1-4
Color : Black
Part No. : 82824-E0100

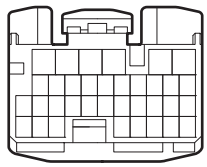

Connector : AG-1-5
Color : White
Part No. : 82824-E0060

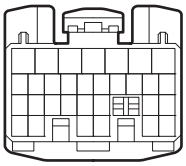

Connector : AG-2
Color : Black
Part No. : 82560-3130

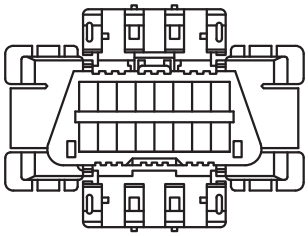

Connector : AG-4
Color : White
Part No. : 82560-2430

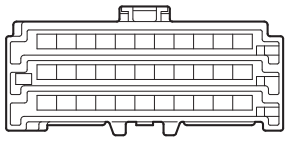

Connector : AG-5
Color : White
Part No. : 82824-E0U90

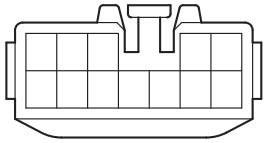

Connector : AG-6
Color : White
Part No. : 82560-2430

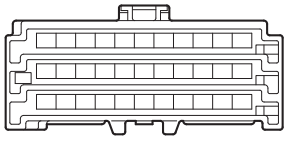

Connector : AG-7
Color : White
Part No. : 82550-1360

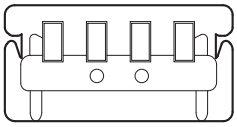

Connector : AG-8
Color : White
Part No. : 82550-1360

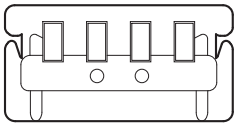

Connector : AG-9
Color : White
Part No. : 82550-1360

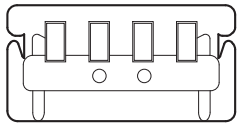

Connector : AH-1-1
Color : White
Part No. : 82824-E0090

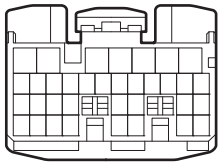

Connector : AH-1-2
Color : Black
Part No. : 82824-E0070

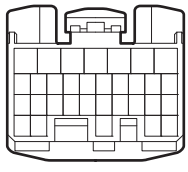

Connector : AH-1-3
Color : Black
Part No. : 82824-E0100

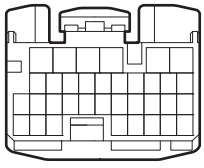

Connector : AH-2
Color : Brown
Part No. : 82560-4120

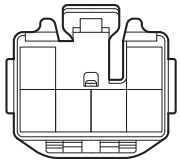

SAPH12Z080200231

Connector : AH-3
Color : White
Part No. : 82824-E0U90

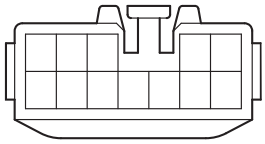

Connector : AH-4
Color : White
Part No. : 82824-2470

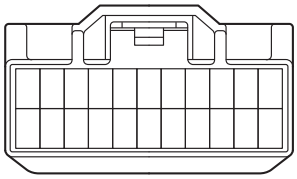

Connector : AH-5
Color : White
Part No. : 82550-1360

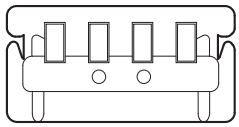

Connector : AH-6
Color : Gray
Part No. : 82580-4860, 85902-1100

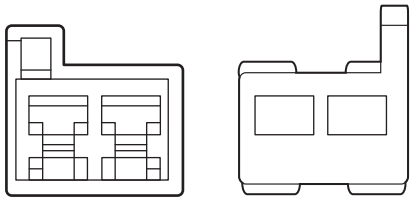

Connector : AH-7
Color : White
Part No. : 82550-1360

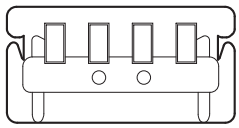

Connector : AH-8
Color : White
Part No. : 82560-2430

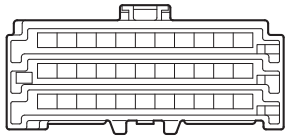

Connector : AI-1-1
Color : White
Part No. : 82824-E0090

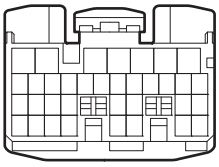

Connector : AI-1-2
Color : Black
Part No. : 82824-E0080

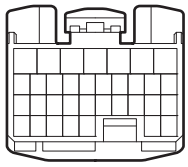

Connector : AI-2
Color : White
Part No. : 82560-2470

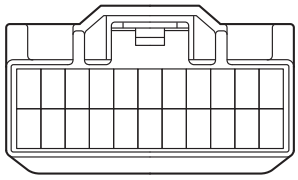

Connector : AI-3
Color : Brown
Part No. : 82560-4120

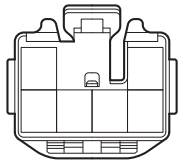

Connector : AI-4
Color : Black
Part No. : 82560-4080

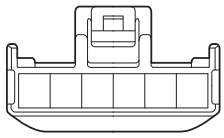

Connector : AI-5
Color : ------
Part No. : 97840-4050

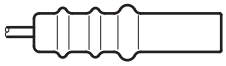

Connector : AI-6
Color : White
Part No. : 82550-1360

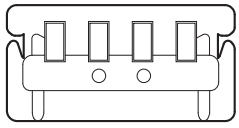

Connector : AI-7
Color : White
Part No. : 82550-1360

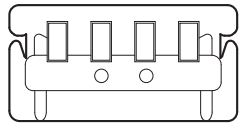

Connector : AJ-1
Color : Black
Part No. : 82824-E0080

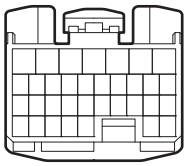

Connector : AJ-3
Color : White
Part No. : 82560-3030

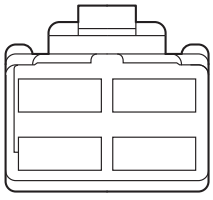

Connector : AJ-4
Color : White
Part No. : 82580-9320

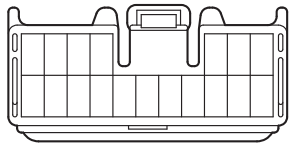

Connector : AJ-5
Color : White
Part No. : 82550-1360

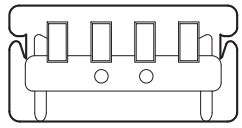

SAPH12Z080200232

Connector : AJ-6
Color : White
Part No. : 82550-1360

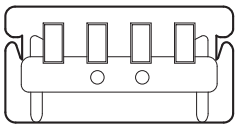

Connector : AL-1
Color : Black
Part No. : S8281-E0A60

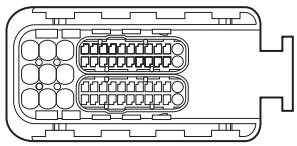

Connector : AL-2
Color : Black
Part No. : S8281-E0A50

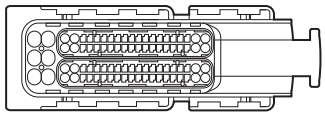

Connector : AL-3
Color : Black
Part No. : S8281-E0B50

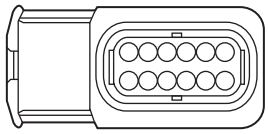

Connector : AL-4
Color : Gray
Part No. : 82580-6040

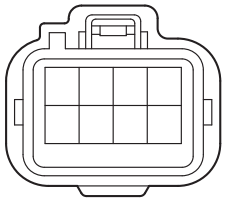

Connector : AL-5
Color : Black
Part No. : S8281-E0690

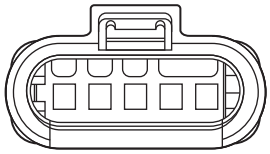

Connector : AL-6
Color : Black
Part No. : S8281-E0690

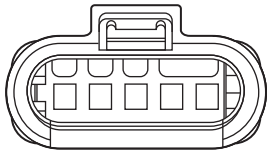

Connector : AL-7
Color : Black
Part No. : 82560-2530



Connector : AL-8
Color : Gray
Part No. : 82580-6040

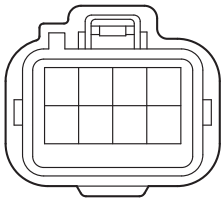

Connector : AL-9
Color : Black
Part No. : S8281-E0B60

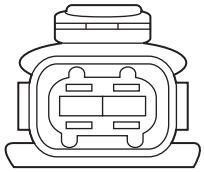

Connector : AL-10
Color : Black
Part No. : 82560-1340

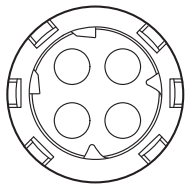

Connector : AL-11
Color : Black
Part No. : 82580-9250

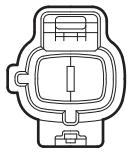

Connector : AL-12
Color : Black
Part No. : S8281-E0700

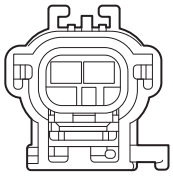

Connector : AL-13
Color : Black
Part No. : S8281-E0410

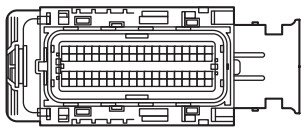

Connector : AL-14
Color : Black
Part No. : S8281-E0810

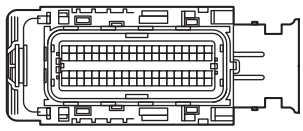

Connector : AL-15
Color : Black
Part No. : 82560-2700

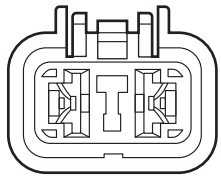

Connector : AL-16
Color : Dark Gray
Part No. : 82560-1670

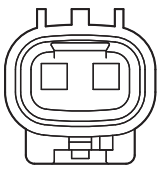

Connector : AL-17
Color : Dark Gray
Part No. : 82580-7800

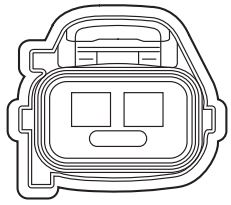

Connector : AL-18
Color : Black
Part No. : 82824-E0X00

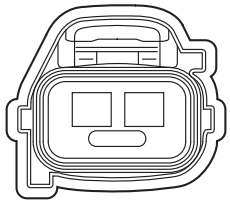

Connector : AM-1
Color : Black
Part No. : 82580-9490

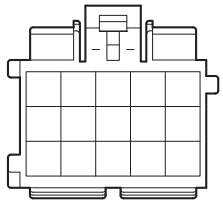

SAPH12Z080200233

Connector : AM-2
Color : Gray
Part No. : 82580-9480

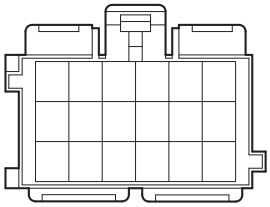

Connector : AM-4
Color : White
Part No. : 82560-2430

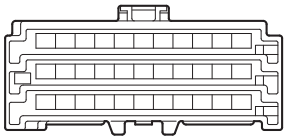

Connector : AM-5
Color : Black
Part No. : 82560-4100

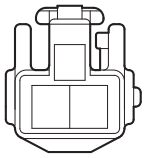

Connector : AM-6
Color : White
Part No. : 82824-E0U90

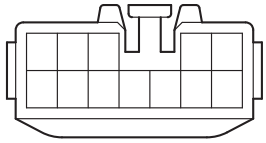

Connector : AM-7
Color : Black
Part No. : 82560-1340

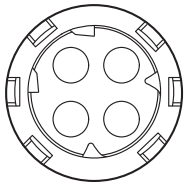

Connector : AM-8
Color : Black
Part No. : 82560-4720

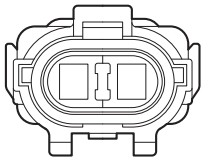

Connector : AM-9
Color : Black
Part No. : 82560-1340

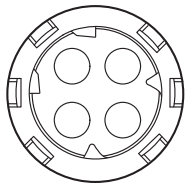

Connector : AM-10
Color : Black
Part No. : 82560-4720

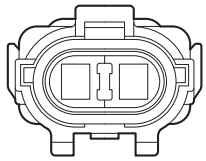

Connector : AM-11
Color : Black
Part No. : 82560-1340

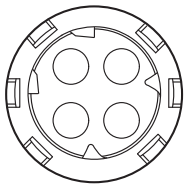

Connector : AM-12
Color : Black
Part No. : 82560-4720

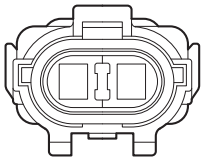

Connector : AM-13
Color : Black
Part No. : 82560-1340

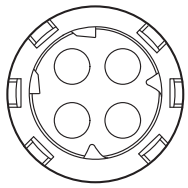

Connector : AM-14
Color : Black
Part No. : 82560-4720

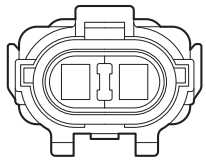

Connector : AN-1
Color : Black
Part No. : 82828-1560

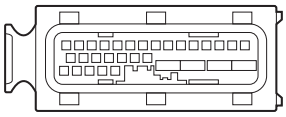

Connector : AN-3
Color : White
Part No. : 82824-E0U90

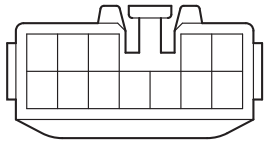

Connector : AN-4
Color : White
Part No. : 82560-2430

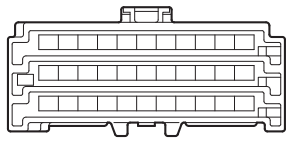

Connector : AN-6
Color : Black
Part No. : 82560-4720

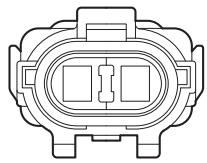

Connector : AN-7
Color : Black
Part No. : 82560-4720

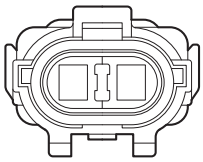

Connector : AN-8
Color : Black
Part No. : 82560-4720

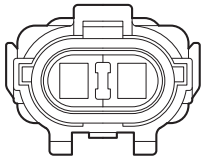

Connector : AN-9
Color : Black
Part No. : 82560-4720

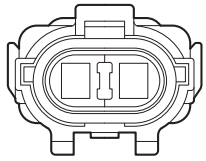

SAPH12Z080200234

Connector : AO-1
Color : Gray
Part No. : 82824-E0U80

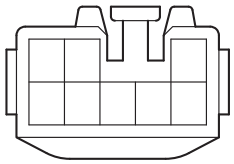

Connector : AO-2
Color : Black
Part No. : 82828-1160

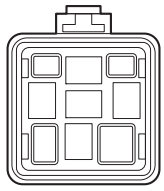

Connector : AO-3
Color : Black
Part No. : 82580-6730

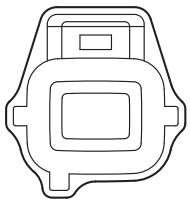

Connector : AO-4
Color : Gray
Part No. : 82828-1170

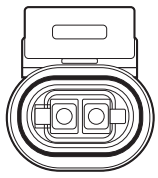

Connector : AO-5
Color : Black
Part No. : 82560-2530



Connector : AO-6
Color : White
Part No. : 82824-E0U90

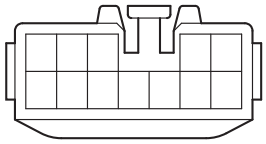

Connector : AQ-1
Color : Black
Part No. : 82828-1570

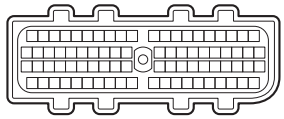

Connector : AQ-3
Color : White
Part No. : 82824-E0U90

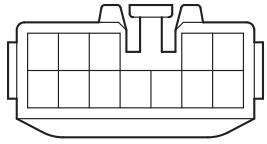

Connector : AQ-4
Color : White
Part No. : 82824-E0U10

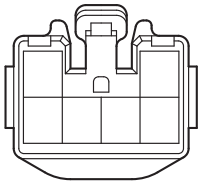

Connector : AQ-5
Color : White
Part No. : 82560-2430

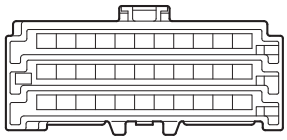

Connector : AQ-6
Color : Black
Part No. : 82560-3800, 85902-1200

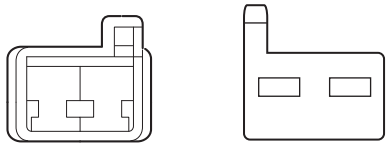

Connector : AQ-7
Color : White
Part No. : 82560-2470

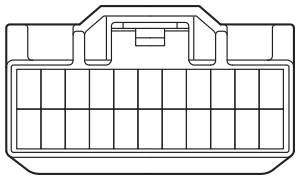

Connector : AQ-8
Color : Black
Part No. : 82828-1610



Connector : AQ-9
Color : Black
Part No. : 82828-1590

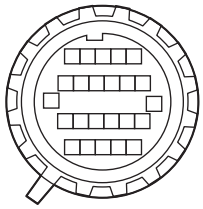

Connector : AQ-10
Color : Black
Part No. : 82828-1610



Connector : AQ-11
Color : Black
Part No. : 82828-1610



Connector : AQ-12
Color : Black
Part No. : 82580-7180

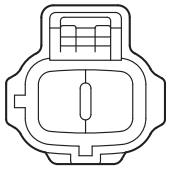

Connector : AQ-15
Color : Black
Part No. : 82560-3800, 85902-1200

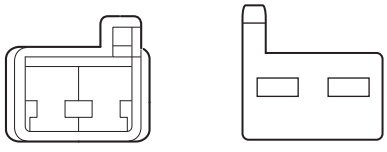

SAPH12Z080200235

Connector : AR-1
Color : Black
Part No. : 82828-1570

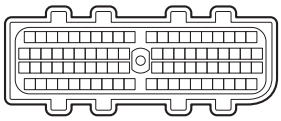

Connector : AR-2
Color : Black
Part No. : 82828-1580

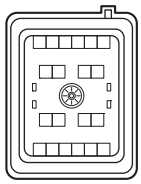

Connector : AR-3
Color : Black
Part No. : 82828-1610



Connector : AR-4
Color : Black
Part No. : 82828-1610



Connector : AR-5
Color : Gray
Part No. : 82828-1600

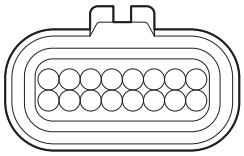

Connector : AR-6
Color : White
Part No. : 82824-E0U90

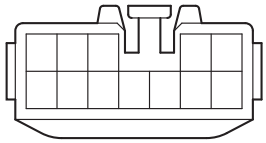

Connector : AR-7
Color : Black
Part No. : 82560-3800, 85902-1200

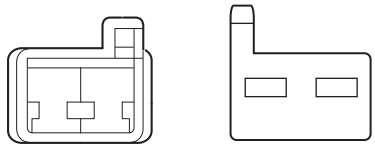

Connector : AR-8
Color : White
Part No. : 82560-2430

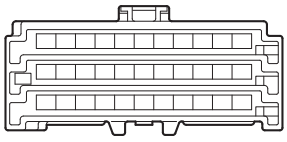

Connector : AR-9
Color : White
Part No. : 82560-2470

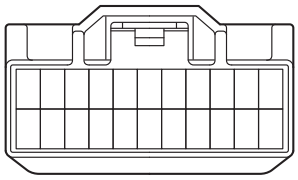

Connector : AR-11
Color : Black
Part No. : 82580-7180

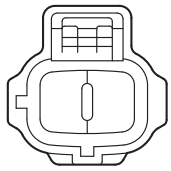

Connector : AR-14
Color : Black
Part No. : 82560-3800, 85902-1200

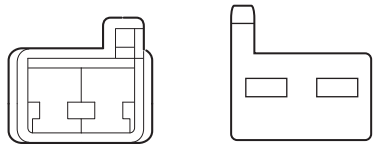

Connector : AT-1
Color : Black
Part No. : 82560-3130

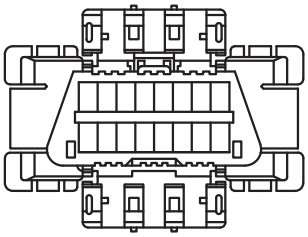

Connector : AT-2
Color : White
Part No. : 82560-2430

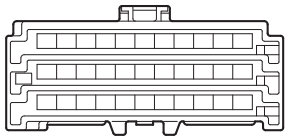

Connector : AT-3-1
Color : Black
Part No. : 82824-E0080

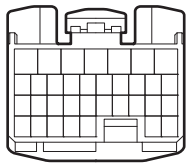

Connector : AT-3-2
Color : White
Part No. : 82824-E0060

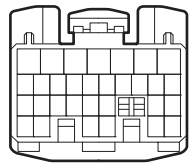

Connector : AT-4
Color : White
Part No. : 82824-E0U90

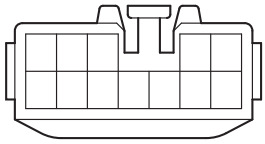

Connector : AU-1
Color : Black
Part No. : 82560-1920

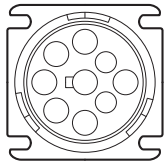

Connector : AU-2
Color : White
Part No. : 82560-2430

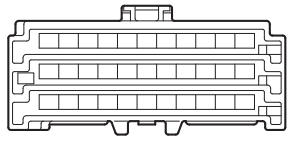

SAPH12Z080200236

Connector : AU-3
Color : White
Part No. : 82824-E0U90

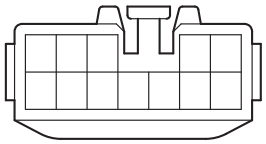

Connector : AV-1
Color : Black
Part No. : 82560-3010

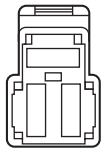

Connector : AV-2
Color : Black
Part No. : 82580-9250

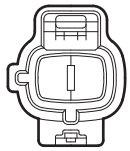

Connector : AW-1-1
Color : Black
Part No. : 82580-7170

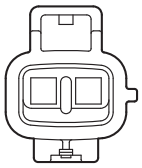

Connector : AW-1-2
Color : Black
Part No. : 82560-4660

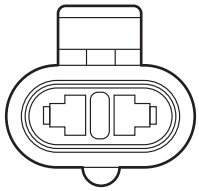

Connector : AW-2
Color : Gray
Part No. : S8281-E0D60

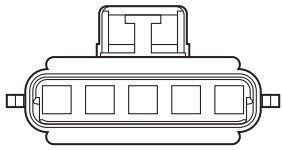

Connector : AX-1
Color : White
Part No. : 82580-7210

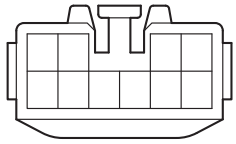

Connector : AX-2
Color : Black
Part No. : 82824-E0P40

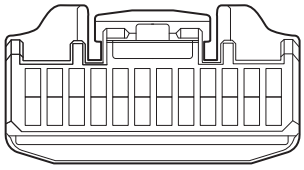

Connector : AX-4
Color : Gray
Part No. : 82580-4860, 85902-1100

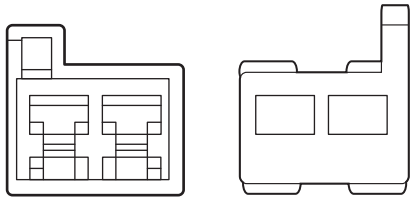

Connector : AX-5
Color : Black
Parts No. : 82580-7130

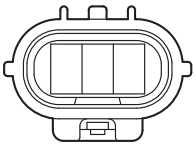

Connector : AX-6
Color : Black
Part No. : 82580-6820

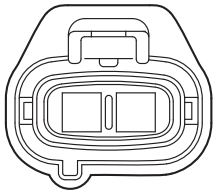

Connector : AX-7
Color : White
Part No. : 82560-2430

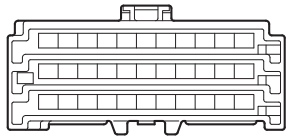

Connector : AX-9
Color : Black
Part No. : 82560-2940

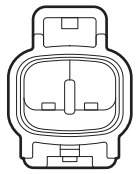

Connector : AX-10
Color : White
Part No. : 82824-E0U90

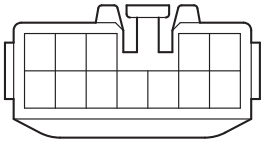

Connector : AX-12
Color : Black
Part No. : 82580-6820

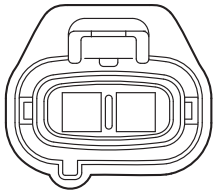

Connector : AX-13
Color : White
Part No. : 82560-4180 , 85902-1210

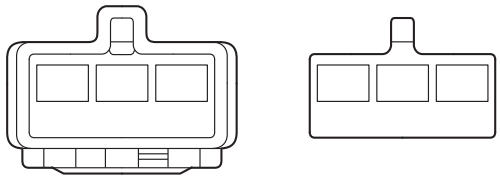

SAPH12Z080200237

Connector : AX-14
Color : White
Part No. : 82550-1360

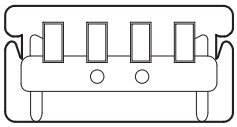

Connector : AX-15
Color : White
Part No. : 82560-2470

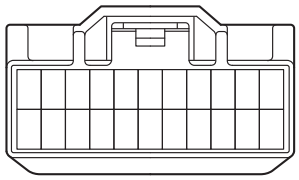

Connector : AY-1
Color : Gray
Part No. : 82828-1600

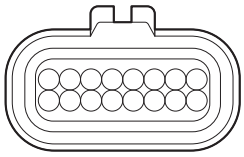

Connector : AY-2-1
Color : Black
Part No. : 82824-E0070

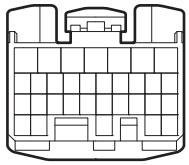

Connector : AY-2-2
Color : White
Part No. : 82824-E0060

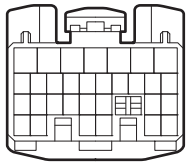

Connector : AY-3
Color : Black
Part No. : 82560-1920

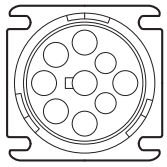

Connector : AY-4-1
Color : Black
Part No. : 82828-1570

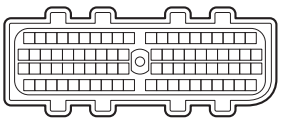

Connector : AY-4-2
Color : Black
Part No. : 82828-1570

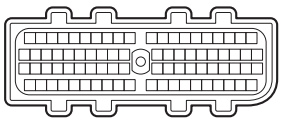

Connector : AY-5
Color : White
Part No. : 82824-E0U90

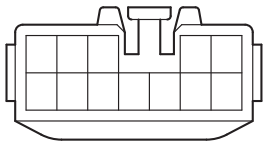

Connector : AY-6
Color : Blue
Part No. : S8281-E0D10

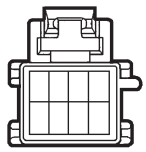

Connector : AZ-1
Color : Black
Part No. : 82560-3130

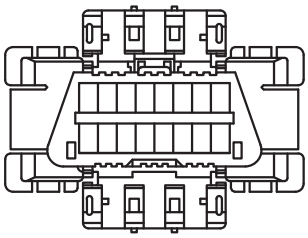

Connector : AZ-2-1
Color : Black
Part No. : 82824-E0070

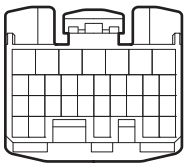

Connector : AZ-2-2
Color : White
Part No. : 82824-E0060

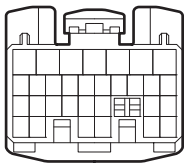

Connector : AZ-3
Color : White
Part No. : 82550-1360

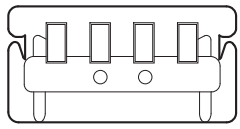

SAPH12Z080200238

Connector : AZ-4
Color : White
Part No. : 82550-1360

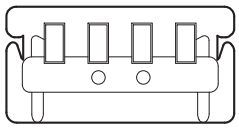

Connector : AZ-5
Color : White
Part No. : 82550-1360

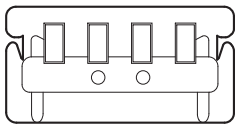

Connector : AZ-6
Color : White
Part No. : 82550-1360

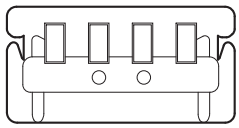

Connector : AZ-7
Color : Black
Part No. : S8281-E0A60

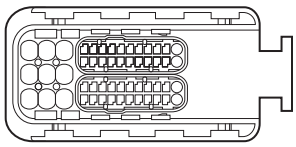

Connector : AZ-8
Color : Black
Part No. : S8281-E0410

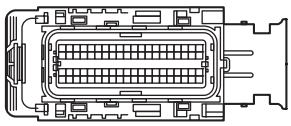

Connector : AZ-9
Color : Gray
Part No. : 82580-6040

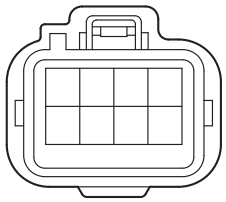

Connector : AZ-10
Color : Blue
Part No. : S8281-E0D10

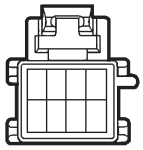

Connector : BA-1
Color : Blue
Part No. : 82560-1720

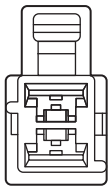

Connector : BA-2
Color : Black
Part No. : S8281-E0810

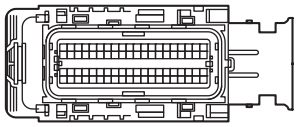

Connector : BA-3
Color : Gray
Part No. : S8281-E0800

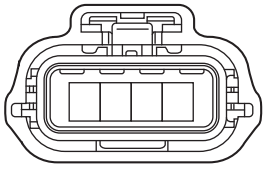

Connector : BA-4
Color : Black
Part No. : 82560-3560

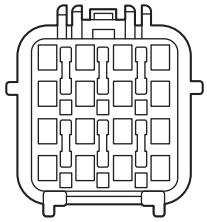

Connector : BA-5
Color : Black
Part No. : S8281-E0690

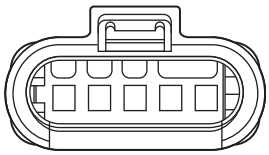

Connector : BA-6
Color : Black
Part No. : S8281-E0690

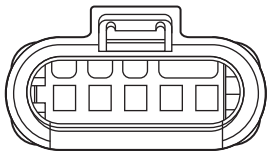

Connector : BA-7
Color : Black
Part No. : S8281-E0A60

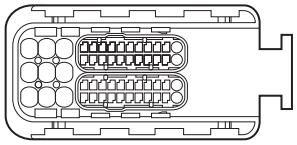

Connector : BA-8
Color : Gray
Part No. : 82580-6040

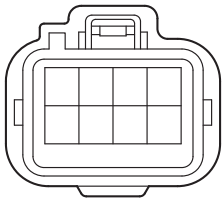

Connector : BA-9
Color : Gray
Part No. : 82580-6040

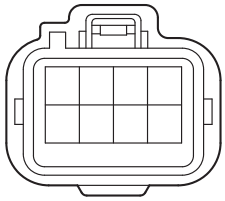

Connector : BA-10
Color : Gray
Part No. : 82580-6040

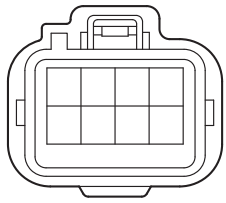

SAPH12Z080200239

Connector : BA-11
Color : Gray
Part No. : 82580-6040

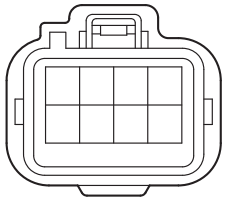

Connector : BA-12
Color : Black
Part No. : 82560-1340

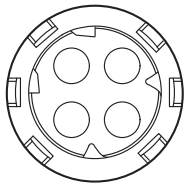

Connector : BA-13
Color : Black
Part No. : S8281-E0F40

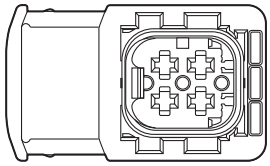

Connector : BB-1
Color : Blue
Part No. : S8281-E0D10

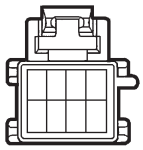

Connector : BB-2
Color : White
Part No. : 82560-2430

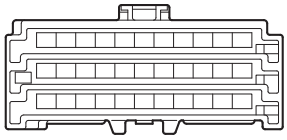

Connector : BG-1
Color : White
Parts No. : 82560-2110 , 82560-2120

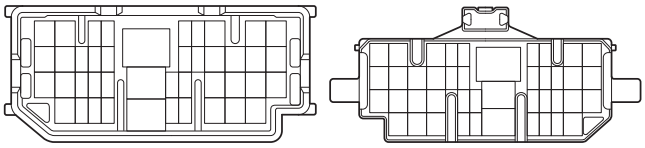

Connector : BG-2
Color : White
Parts No. : 82560-2130 , 82560-2140

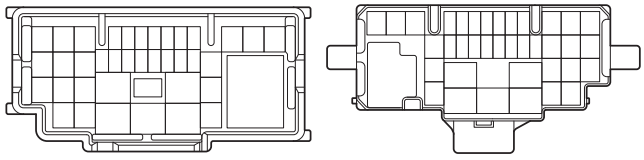

Connector : BG-3
Color : White
Parts No. : 82560-2070 , 82560-2080

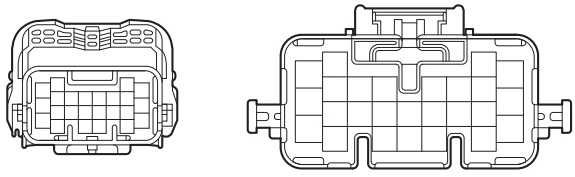

Connector : BG-4
Color : Black
Parts No. : 82580-9180, 82580-9190

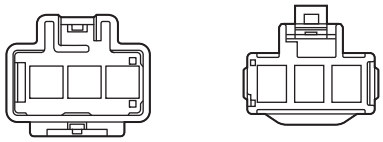

Connector : BG-5
Color : White
Parts No. : 82560-2460, 82560-2470

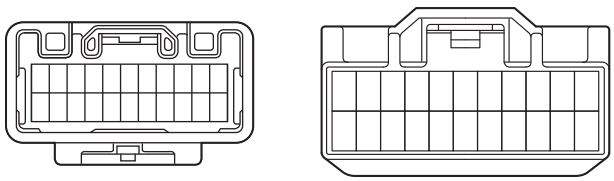

Connector : BG-6
Color : White
Parts No. : 82560-2150, 82824-E0D80

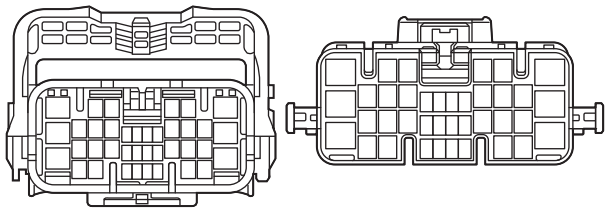

SAPH12Z080200240

Connector : BG-7
Color : Blue
Parts No. : 82580-6050 , 82580-6060

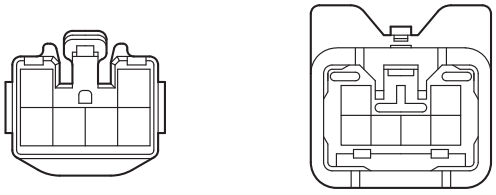

Connector : BG-8
Color : Gray
Parts No. : 82560-2070 , 82560-2080

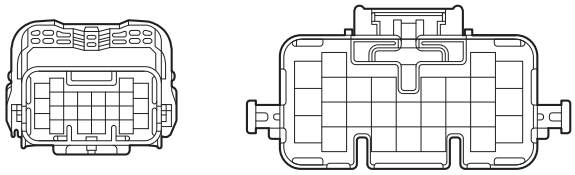

Connector : BH-1
Color : White
Parts No. : 82580-6050 , 82580-6060

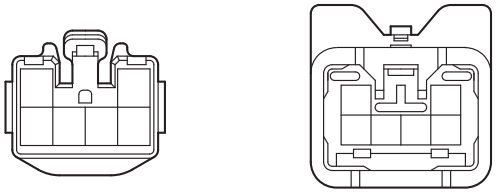

Connector : BH-2
Color : White
Parts No. : 82580-8730, 82580-8740

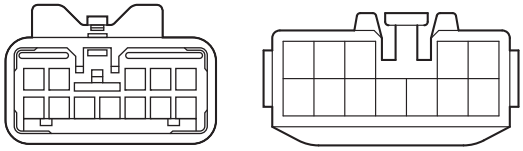

Connector : BH-3
Color : Orange
Parts No. : 82560-2610 , 82560-2620

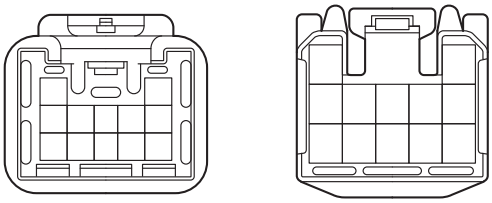

Connector : BH-4
Color : Gray
Parts No. : 82580-7140 , 82580-7130

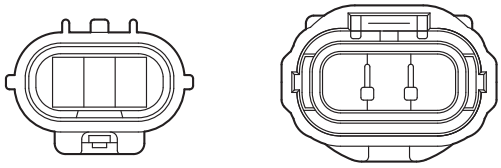

Connector : BH-5
Color : White
Parts No. : 82824-E0U10, 82580-6050

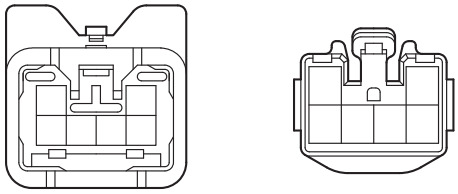

Connector : BH-6
Color : Black
Parts No. : 82580-8730, 82580-E0U90

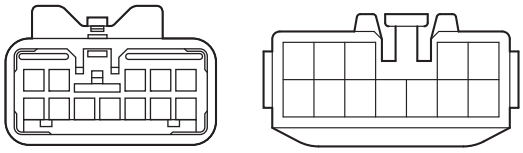

Connector : BH-7
Color : Gray
Parts No. : 82560-3450,82560-3460

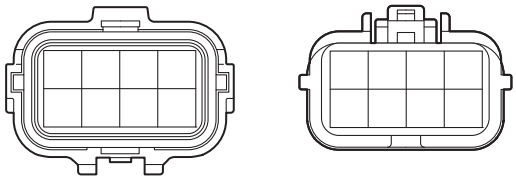

Connector : BH-8
Color : White
Parts No. : 82560-2540,82560-2550

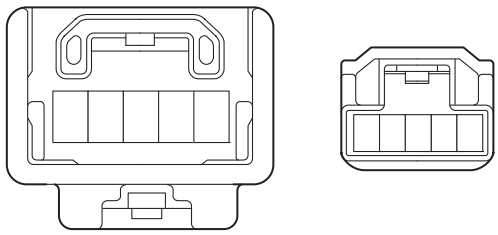

SAPH12Z080200241

Connector : BH-9
Color : Black
Parts No. : 82580-7130 , 82580-7140

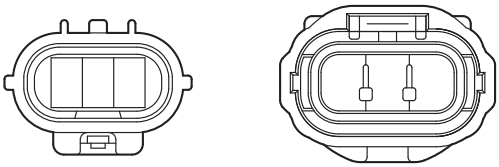

Connector : BH-10
Color : Black
Parts No. : 82560-1320 , 82824-E0K00

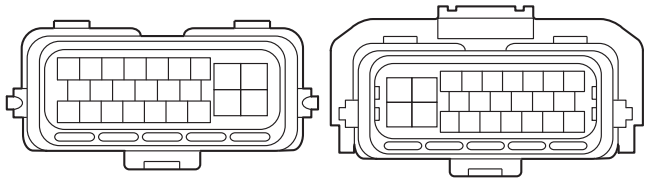

Connector : BH-11
Color : Black
Parts No. : 82560-3470 , 82560-3480

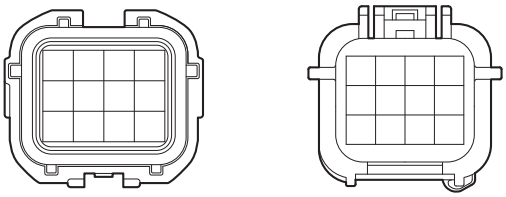

Connector : BH-12
Color : Black
Parts No. : 82560-3470 , 82560-3480

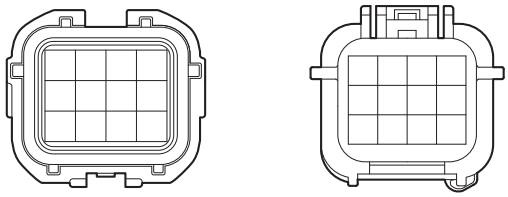

Connector : BH-13
Color : Black
Parts No. : 82824-E0K00 , 82560-1320

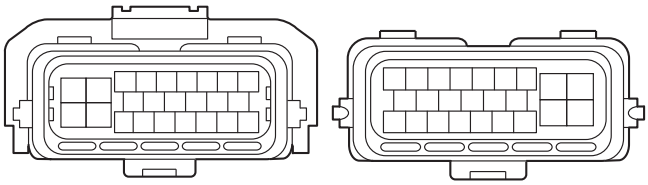

Connector : BH-14
Color : Gray
Part No. : 82560-1250, 82560-1260

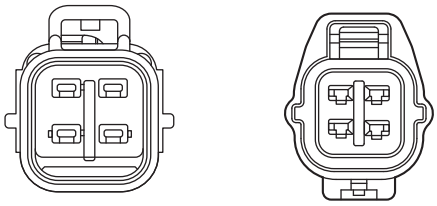

Connector : BH-15
Color : Black
Parts No. : 82560-3470 , 82560-3480

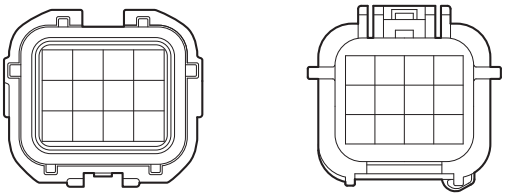

Connector : BH-16
Color : Black
Parts No. : 82560-3530 , 82560-3540

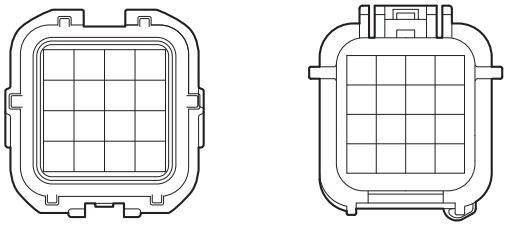

Connector : BH-17
Color : Gray, Dark gray
Part No. : 82560-3480, 82560-1200

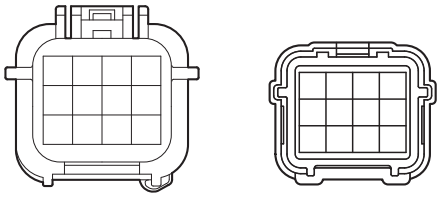

Connector : BH-18
Color : Dark gray, Gray
Part No. : 82560-1200, 82560-7980

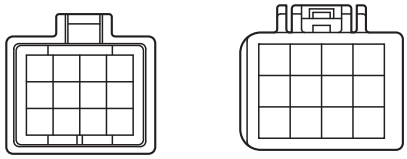

Connector : BH-19
Color : Black
Part No. : 82560-3410, 82560-3420

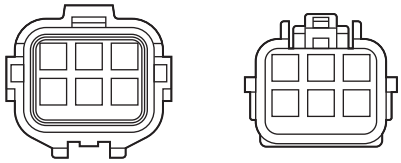

Connector : BH-20
Color : Black
Part No. : 82560-3410, 82560-3420

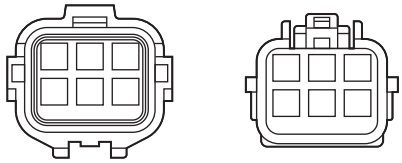

Connector : BH-21
Color : Black
Parts No. : 82560-3530 , 82560-3540

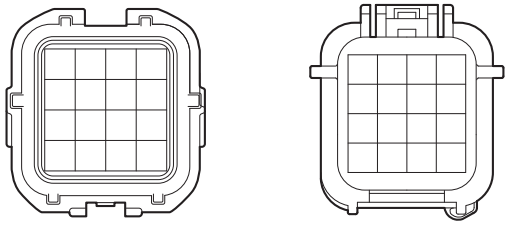

Connector : BH-22
Color : Black
Part No. : 82560-3410, 82560-3420

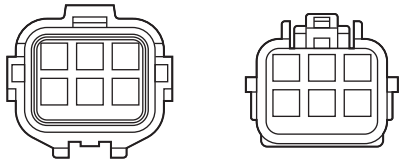

SAPH12Z080200243

Connector : BI-1
Color : Black
Part No. : 82560-4840

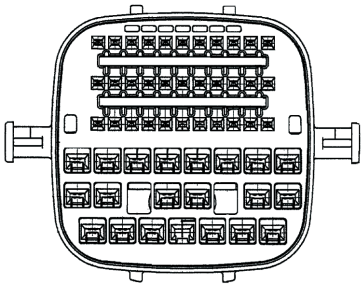

Connector : BI-2
Color : Black
Part No. : 82560-4830

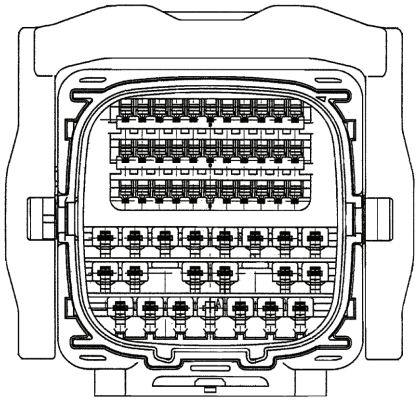

Connector : BI-3
Color : Black
Part No. : 82560-3480

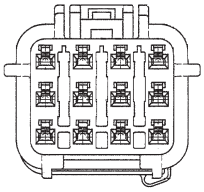

Connector : BI-4
Color : Black
Part No. : 82560-3470

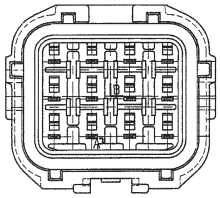

SAPH12Z080200244

# PIN LIST OF WIRE TO WIRE CONNECTOR (IN THE BULK HEAD CONNECTOR BOX)

EN12Z0802J100007

| PIN | CONNECTOR NUMBER | MALE / FEMALE | PIN | CONNECTOR NUMBER | MALE / FEMALE | PIN | CONNECTOR NUMBER | MALE / FEMALE |
|---|---|---|---|---|---|---|---|---|
| #1Y | BG-8 | M | #79 | BG-2 | F | #79 | BG-2 | M |
| #91 | BG-3 | F | #91 | BG-3 | M | #92 | BG-3 | F |
| #92 | BG-3 | M | #93 | BG-1 | F | #93 | BG-1 | M |
| #94 | BG-3 | F | #94 | BG-3 | M | #95 | BG-3 | F |
| #95 | BG-3 | M | #96 | BG-1 | F | #96 | BG-1 | M |
| #97 | BG-1 | F | #97 | BG-1 | M | | | |
| #A1 | BG-2 | F | #A1 | BG-2 | M | #A3 | BG-2 | F |
| #A3 | BG-2 | M | #A4 | BG-2 | F | #A4 | BG-2 | M |
| #A5 | BG-2 | F | #A5 | BG-2 | M | | | |
| #AB | BG-1 | F | #AB | BG-1 | M | #AC | BG-1 | F |
| #AC | BG-1 | M | #AD | BG-5 | F | #AD | BG-5 | M |
| #AE | BG-4 | F | #AE | BG-4 | M | #AF | BG-2 | F |
| #AF | BG-2 | M | #AG | BG-2 | F | #AG | BG-2 | M |
| #AH | BG-2 | F | #AH | BG-2 | M | #AJ | BG-2 | F |
| #AJ | BG-2 | M | #AM | BG-2 | F | #AM | BG-2 | M |
| #AY | BG-2 | F | #AY | BG-2 | M | | | |
| #B1 | BG-1 | F | #B1 | BG-1 | M | #B2 | BG-1 | F |
| #B2 | BG-1 | M | #B3 | BG-1 | F | #B3 | BG-1 | M |
| #B4 | BG-1 | F | #B4 | BG-1 | M | #B5 | BG-1 | F |
| #B5 | BG-1 | M | #B6 | BG-1 | F | #B6 | BG-1 | M |
| #B7 | BG-1 | F | #B7 | BG-1 | M | #B8 | BG-1 | F |
| #B8 | BG-1 | M | #B9 | BG-1 | F | #B9 | BG-1 | M |
| #BA | BG-1 | F | #BA | BG-1 | M | #BB | BG-1 | F |
| #BB | BG-1 | M | #BC | BG-1 | F | #BC | BG-1 | M |
| #BD | BG-1 | F | #BD | BG-1 | M | #BE | BG-1 | F |
| #BE | BG-1 | M | #BF | BG-1 | F | #BF | BG-1 | M |
| #BG | BG-1 | F | #BG | BG-1 | M | | | |

| PIN | CONNECTOR NUMBER | MALE / FEMALE | PIN | CONNECTOR NUMBER | MALE / FEMALE | PIN | CONNECTOR NUMBER | MALE / FEMALE |
|---|---|---|---|---|---|---|---|---|
| #D1 | BG-1 | F | #D1 | BG-1 | M | #D2 | BG-1 | F |
| #D2 | BG-1 | M | #D3 | BG-2 | F | #D3 | BG-2 | M |
| #DL | BG-1 | F | #DL | BG-1 | M | #DN | BG-1 | F |
| #DN | BG-1 | M | #DP | BG-2 | F | #DP | BG-2 | M |
| #E1 | BG-3 | F | #E1 | BG-3 | M | #E2 | BG-6 | F |
| #E2 | BG-6 | M | | | | | | |
| #F4 | BG-1 | F | #F4 | BG-1 | M | | | |
| #FB | BG-4 | F | #FB | BG-4 | M | #FE | BG-2 | F |
| #FE | BG-2 | M | #FN | BG-1 | F | #FN | BG-1 | M |
| #G1 | BG-1 | F | #G1 | BG-1 | M | #G3 | BG-2 | F |
| #G3 | BG-2 | M | | | | | | |
| #GN | BG-1 | F | #GN | BG-1 | M | #GP | BG-1 | F |
| #GP | BG-1 | M | #GQ | BG-1 | F | #GQ | BG-1 | M |
| #GT | BG-1 | F | #GT | BG-1 | M | #GX | BG-1 | F |
| #GX | BG-1 | M | | | | | | |
| #H1 | BG-2 | F | #H1 | BG-2 | M | #H2 | BG-3 | F |
| #H2 | BG-3 | M | #H3 | BG-3 | F | #H3 | BG-3 | M |
| #H4 | BG-3 | F | #H4 | BG-3 | M | #H5 | BG-3 | F |
| #H5 | BG-3 | M | #H6 | BG-2 | F | #H6 | BG-2 | M |
| #J7 | BG-3 | F | #J7 | BG-3 | M | #J8 | BG-3 | F |
| #J8 | BG-3 | M | #J9 | BG-3 | F | #J9 | BG-3 | M |
| #JA | BG-2 | F | #JA | BG-2 | M | #JB | BG-2 | F |
| #JB | BG-2 | M | #JC | BG-2 | F | #JC | BG-2 | M |
| #L1 | BG-2 | F | #L1 | BG-2 | M | #L2 | BG-1 | F |
| #L2 | BG-1 | M | #L3 | BG-1 | F | #L3 | BG-1 | M |
| #L4 | BG-2 | F | #L4 | BG-2 | M | #L6 | BG-2 | F |
| #L6 | BG-2 | M | #L7 | BG-2 | F | #L7 | BG-2 | M |
| #L8 | BG-2 | F | #L8 | BG-2 | M | #L9 | BG-2 | F |
| #L9 | BG-2 | M | | | | | | |
| #LA | BG-2 | F | #LA | BG-2 | M | #LB | BG-2 | F |
| #LB | BG-2 | M | #LC | BG-1 | F | #LC | BG-1 | M |
| #LH | BG-1 | F | #LH | BG-1 | M | | | |

| PIN | CONNECTOR NUMBER | MALE / FEMALE | PIN | CONNECTOR NUMBER | MALE / FEMALE | PIN | CONNECTOR NUMBER | MALE / FEMALE |
|---|---|---|---|---|---|---|---|---|
| #M1 | BG-2 | F | #M1 | BG-2 | M | #M2 | BG-2 | F |
| #M2 | BG-2 | M | #M3 | BG-1 | F | #M3 | BG-1 | M |
| #M6 | BG-2 | F | #M6 | BG-2 | M | #M7 | BG-1 | F |
| #M7 | BG-1 | M | #M8 | BG-1 | F | #M8 | BG-1 | M |
| #M9 | BG-3 | F | #M9 | BG-3 | M | | | |
| #MA | BG-3 | F | #MA | BG-3 | M | #MB | BG-3 | F |
| #MB | BG-3 | M | #MC | BG-3 | F | #MC | BG-3 | M |
| #MD | BG-3 | F | #MD | BG-3 | M | #ME | BG-1 | F |
| #ME | BG-1 | M | #MF | BG-3 | F | #MF | BG-3 | M |
| #MG | BG-3 | F | #MG | BG-3 | M | | | |
| #PB | BG-3 | F | #PB | BG-3 | M | #PC | BG-2 | F |
| #PC | BG-2 | M | #PD | BG-2 | F | #PD | BG-2 | M |
| #PE | BG-2 | F | #PE | BG-2 | M | #PG | BG-3 | F |
| #PG | BG-3 | M | #PH | BG-3 | F | #PH | BG-3 | M |
| #R1 | BG-6 | F | #R2 | BG-6 | F | #R3 | BG-6 | F |
| #R4 | BG-6 | F | #R5 | BG-6 | F | #R6 | BG-6 | F |
| #R7 | BG-6 | F | #R8 | BG-6 | F | #R9 | BG-6 | F |
| #S1 | BG-5 | F | #S1 | BG-5 | M | #S3 | BG-5 | F |
| #S3 | BG-5 | M | #S5 | BG-8 | F | #S5 | BG-8 | M |
| #S7 | BG-8 | F | #S7 | BG-8 | M | | | |
| #SD | BG-8 | F | #SD | BG-8 | M | #SF | BG-8 | F |
| #SF | BG-8 | M | | | | | | |
| #Y1 | BG-7 | M | #Y2 | BG-7 | M | #Y3 | BG-7 | M |
| #Y4 | BG-7 | M | #Y5 | BG-7 | M | #Y6 | BG-7 | M |
| %15 | BG-6 | F | %A7 | BG-6 | F | | | |
| %A8 | BG-6 | F | | | | | | |
| %C1 | BG-5 | F | | | | | | |
| %D7 | BG-6 | F | | | | | | |
| %DM | BG-6 | F | %DN | BG-6 | F | | | |
| &1D | BG-8 | M | | | | | | |

| PIN | CONNECTOR NUMBER | MALE / FEMALE | PIN | CONNECTOR NUMBER | MALE / FEMALE | PIN | CONNECTOR NUMBER | MALE / FEMALE |
|---|---|---|---|---|---|---|---|---|
| AC7 | BG-6 | F | | | | | | |
| ASB | BG-8 | M | ASC | BG-8 | M | ASE | BG-8 | M |
| ASF | BG-8 | M | ASG | BG-8 | M | ASH | BG-8 | M |
| ASJ | BG-8 | F | ASK | BG-8 | F | ASL | BG-8 | F |
| ASM | BG-8 | F | | | | | | |
| CLV | BG-6 | F | | | | | | |
| E0M | BG-6 | F | E7F | BG-6 | F | | | |
| ERY | BG-5 | F | ERZ | BG-5 | F | | | |
| K01 | BG-6 | F | K07 | BG-6 | M | K08 | BG-6 | M |
| K0B | BG-7 | F | K0C | BG-7 | F | K0G | BG-6 | M |
| K0H | BG-6 | M | K0L | BG-6 | M | K0N | BG-8 | F |
| K1V | BG-7 | F | K1W | BG-7 | F | K1X | BG-6 | M |
| K42 | BG-6 | M | K44 | BG-8 | F | K44 | BG-6 | M |
| K45 | BG-6 | M | | | | | | |
| K4C | BG-6 | M | K4D | BG-6 | M | K4F | BG-6 | M |
| K4S | BG-8 | F | | | | | | |
| K56 | BG-6 | M | K57 | BG-6 | M | K5Z | BG-5 | M |
| K62 | BG-5 | M | K6L | BG-6 | M | | | |
| K8Y | BG-5 | F | K8Z | BG-5 | F | | | |
| K90 | BG-5 | F | K91 | BG-5 | F | K92 | BG-5 | F |
| K93 | BG-5 | F | K96 | BG-8 | M | K97 | BG-8 | M |
| KBP | BG-6 | F | | | | | | |
| KR4 | BG-8 | F | KRA | BG-7 | F | KRB | BG-8 | F |
| KRF | BG-6 | M | KRP | BG-5 | M | KRQ | BG-5 | M |
| KRR | BG-8 | F | KRX | BG-8 | F | KRX | BG-5 | M |
| KRY | BG-5 | M | | | | | | |
| KS2 | BG-6 | F | KSE | BG-8 | M | KSG | BG-8 | M |
| KSJ | BG-8 | M | KSK | BG-8 | M | KSL | BG-8 | M |
| KSN | BG-6 | F | KSW | BG-6 | M | | | |
| KU6 | BG-6 | M | KUF | BG-6 | M | KUH | BG-8 | F |
| KV0 | BG-6 | M | KVA | BG-8 | F | KVQ | BG-5 | M |

| PIN | CONNECTOR NUMBER | MALE / FEMALE | PIN | CONNECTOR NUMBER | MALE / FEMALE | PIN | CONNECTOR NUMBER | MALE / FEMALE |
|---|---|---|---|---|---|---|---|---|
| L2H | BG-6 | M | L2J | BG-6 | M | L2H | BG-6 | F |
| L3U | BG-6 | F | | | | | | |
| L4E | BG-8 | M | | | | | | |
| L6R | BG-5 | M | | | | | | |
| LCF | BG-8 | F | LCG | BG-8 | F | LCJ | BG-6 | M |
| LCK | BG-8 | F | LCL | BG-8 | F | LCV | BG-6 | M |
| LCX | BG-7 | F | | | | | | |
| LD0 | BG-8 | M | | | | | | |
| LL1 | BG-6 | M | LL2 | BG-8 | F | | | |
| N1N | BG-6 | F | | | | | | |
| NRF | BG-8 | M | | | | | | |
| SOR | BG-8 | M | | | | | | |

# PIN LIST OF WIRE TO WIRE CONNECTOR (OUT OF THE BULK HEAD CONNECTOR BOX)

EN12Z0802J100008

| PIN | CONNECTOR NUMBER | MALE / FEMALE | PIN | CONNECTOR NUMBER | MALE / FEMALE | PIN | CONNECTOR NUMBER | MALE / FEMALE |
|---|---|---|---|---|---|---|---|---|
| #11 | BH-10 | F | #11 | BH-10 | M | #11 | BH-11 | F |
| #11 | BH-11 | M | #12 | BH-10 | F | #12 | BH-10 | M |
| #12 | BH-11 | F | #12 | BH-11 | M | #13 | BH-10 | F |
| #13 | BH-10 | M | #13 | BH-11 | F | #13 | BH-11 | M |
| #14 | BH-11 | F | #14 | BH-11 | M | #14 | BH-19 | F |
| #14 | BH-19 | M | #15 | BH-10 | F | #15 | BH-10 | M |
| #15 | BH-11 | F | #15 | BH-11 | M | #18 | BH-10 | F |
| #18 | BH-10 | M | #18 | BH-11 | F | #18 | BH-11 | M |
| #19 | BH-10 | F | #19 | BH-10 | M | #19 | BH-11 | F |
| #19 | BH-11 | M | | | | | | |
| #1A | BH-10 | F | #1A | BH-10 | M | #1A | BH-11 | F |
| #1A | BH-11 | M | #1B | BH-10 | F | #1B | BH-10 | M |
| #1B | BH-11 | F | #1B | BH-11 | M | #1C | BH-10 | F |
| #1C | BH-10 | M | #1D | BH-10 | F | #1D | BH-10 | M |
| #1E | BH-10 | F | #1E | BH-10 | M | #1F | BH-10 | F |
| #1F | BH-10 | M | #1L | BH-11 | F | #1L | BH-19 | F |
| #1L | BH-11 | M | #1L | BH-19 | M | #1M | BH-10 | F |
| #1M | BH-10 | M | #1N | BH-10 | F | #1N | BH-10 | M |
| #1P | BH-10 | F | #1P | BH-10 | M | #1T | BH-10 | F |
| #1T | BH-11 | F | #1T | BH-10 | M | #1T | BH-11 | M |
| #1X | BH-10 | F | #1X | BH-10 | M | #1Y | BH-10 | F |
| #1Y | BH-10 | M | | | | | | |
| #21 | BH-12 | F | #21 | BH-12 | M | #22 | BH-12 | F |
| #22 | BH-12 | M | #23 | BH-12 | F | #23 | BH-12 | M |
| #24 | BH-12 | F | #24 | BH-12 | M | #25 | BH-12 | F |
| #25 | BH-12 | M | #26 | BH-12 | F | #26 | BH-12 | M |
| #27 | BH-12 | F | #27 | BH-12 | M | #28 | BH-12 | F |
| #28 | BH-12 | M | #29 | BH-12 | F | #29 | BH-12 | M |
| #2G | BH-11 | F | #2G | BH-19 | F | #2G | BH-11 | M |
| #2G | BH-19 | M | | | | | | |

| PIN | CONNECTOR NUMBER | MALE / FEMALE | PIN | CONNECTOR NUMBER | MALE / FEMALE | PIN | CONNECTOR NUMBER | MALE / FEMALE |
|---|---|---|---|---|---|---|---|---|
| #53 | BH-4 | F | #53 | BH-4 | M | #54 | BH-4 | F |
| #54 | BH-4 | M | #55 | BH-4 | F | #55 | BH-4 | M |
| #61 | BH-3 | F | #61 | BH-3 | M | #62 | BH-1 | F |
| #62 | BH-1 | M | #63 | BH-3 | F | #63 | BH-3 | M |
| #64 | BH-1 | F | #64 | BH-1 | M | #65 | BH-3 | F |
| #65 | BH-3 | M | #67 | BH-2 | F | #67 | BH-2 | M |
| #68 | BH-2 | F | #68 | BH-2 | M | #69 | BH-1 | F |
| #69 | BH-1 | M | | | | | | |
| #6A | BH-2 | F | #6A | BH-2 | M | #6B | BH-2 | F |
| #6B | BH-2 | M | #6C | BH-2 | F | #6C | BH-2 | M |
| #6D | BH-3 | F | #6D | BH-3 | M | #6E | BH-3 | F |
| #6E | BH-3 | M | #6F | BH-3 | F | #6F | BH-3 | M |
| #6G | BH-3 | F | #6G | BH-3 | M | #6H | BH-3 | F |
| #6H | BH-3 | M | #6J | BH-2 | F | #6J | BH-2 | M |
| #6L | BH-2 | F | #6L | BH-2 | M | #6M | BH-2 | F |
| #6M | BH-2 | M | #6N | BH-2 | F | #6N | BH-2 | M |
| #71 | BH-5 | F | #71 | BH-5 | M | #72 | BH-5 | F |
| #72 | BH-5 | M | #73 | BH-5 | F | #73 | BH-5 | M |
| #74 | BH-5 | F | #74 | BH-5 | M | | | |
| #7A | BH-9 | F | #7A | BH-9 | M | #7B | BH-9 | F |
| #7B | BH-9 | M | #7C | BH-9 | F | #7C | BH-9 | M |
| #AD | BH-16 | F | #AQ | BH-13 | F | #AQ | BH-13 | M |
| #AR | BH-13 | F | #AR | BH-13 | M | #AU | BH-13 | F |
| #AU | BH-13 | M | #AV | BH-13 | F | #AV | BH-13 | M |
| #AW | BH-13 | F | #AW | BH-13 | M | | | |
| #CP | BH-13 | F | #CP | BH-13 | M | #CQ | BH-13 | F |
| #CQ | BH-13 | M | | | | | | |
| #GU | BH-13 | F | #GU | BH-13 | M | #GV | BH-13 | F |
| #GV | BH-13 | M | #GW | BH-13 | F | #GW | BH-13 | M |
| #K3 | BH-10 | F | #K3 | BH-10 | M | #K4 | BH-10 | F |
| #K4 | BH-10 | M | #K5 | BH-10 | F | #K5 | BH-10 | M |
| #K6 | BH-10 | F | #K6 | BH-10 | M | | | |

| PIN | CONNECTOR NUMBER | MALE / FEMALE | PIN | CONNECTOR NUMBER | MALE / FEMALE | PIN | CONNECTOR NUMBER | MALE / FEMALE |
|---|---|---|---|---|---|---|---|---|
| #Q1 | BH-3 | F | #Q1 | BH-3 | M | #Q2 | BH-3 | F |
| #Q2 | BH-3 | M | #Q3 | BH-3 | F | #Q3 | BH-3 | M |
| #Q4 | BH-1 | F | #Q4 | BH-1 | M | #Q5 | BH-1 | F |
| #Q5 | BH-1 | M | #Q6 | BH-1 | F | #Q6 | BH-1 | M |
| #T1 | BH-7 | F | #T1 | BH-7 | M | #T2 | BH-7 | F |
| #T2 | BH-7 | M | #T3 | BH-7 | F | #T3 | BH-7 | M |
| #T4 | BH-7 | F | #T4 | BH-7 | M | #T5 | BH-7 | F |
| #T6 | BH-7 | F | #T6 | BH-7 | M | #T7 | BH-7 | F |
| #T7 | BH-7 | M | | | | | | |
| #TA | BH-8 | F | #TA | BH-8 | M | #TB | BH-8 | F |
| #TB | BH-8 | M | #TC | BH-8 | F | #TC | BH-8 | M |
| #TD | BH-8 | F | #TD | BH-8 | M | #TE | BH-8 | F |
| #TE | BH-8 | M | | | | | | |
| #X7 | BH-20 | F | #X7 | BH-20 | M | | | |
| %ND | BH-21 | F | %ND | BH-21 | M | %NE | BH-21 | F |
| %NE | BH-21 | M | %NF | BH-21 | F | %NF | BH-21 | M |
| %NG | BH-21 | F | %NG | BH-21 | M | %NH | BH-21 | F |
| %NH | BH-21 | M | %NJ | BH-21 | F | %NJ | BH-21 | M |
| %NK | BH-21 | F | %NK | BH-21 | M | %NL | BH-21 | F |
| %NL | BH-21 | M | %NM | BH-21 | F | %NM | BH-21 | M |
| %NN | BH-21 | F | %NN | BH-21 | M | %NP | BH-21 | F |
| %NP | BH-21 | M | %NQ | BH-21 | F | %NQ | BH-21 | M |
| %NR | BH-21 | F | %NR | BH-21 | M | %NS | BH-21 | F |
| %NS | BH-21 | M | %NT | BH-21 | F | %NT | BH-21 | M |
| %NU | BH-21 | F | %NU | BH-21 | M | | | |
| %W7 | BH-6 | M | | | | | | |
| %Z3 | BH-16 | M | | | | | | |
| &TG | BH-22 | F | &TG | BH-22 | M | &TH | BH-22 | F |
| &TH | BH-22 | M | &TJ | BH-22 | F | &TJ | BH-22 | M |
| &TK | BH-13 | F | &TK | BH-13 | M | &TL | BH-13 | F |
| &TL | BH-13 | M | &TM | BH-13 | F | &TM | BH-13 | M |

| PIN | CONNECTOR NUMBER | MALE / FEMALE | PIN | CONNECTOR NUMBER | MALE / FEMALE | PIN | CONNECTOR NUMBER | MALE / FEMALE |
|---|---|---|---|---|---|---|---|---|
| A0W | BH-6 | M | A3W | BH-23 | F | A3Y | BH-23 | M |
| A43 | BH-16 | M | | | | | | |
| A7T | BH-13 | F | | | | | | |
| ASE | BH-14 | F | ASF | BH-14 | F | ASG | BH-14 | F |
| ASH | BH-14 | F | ASJ | BH-14 | M | ASK | BH-14 | M |
| ASL | BH-14 | M | ASM | BH-14 | M | | | |
| C0C | BH-6 | M | | | | | | |
| C1P | BH-6 | M | | | | | | |
| C4N | BH-6 | M | C4P | BH-6 | M | C4Q | BH-6 | M |
| C4S | BH-6 | M | | | | | | |
| C7N | BH-6 | F | C7P | BH-6 | F | C7W | BH-6 | F |
| C84 | BH-6 | F | C85 | BH-6 | F | C87 | BH-6 | F |
| C88 | BH-6 | F | C8B | BH-6 | F | C8C | BH-6 | F |
| E23 | BH-15 | M | E2R | BH-16 | M | | | |
| G0Q | BH-16 | F | G0Y | BH-16 | M | | | |
| JE3 | BH-20 | F | JE3 | BH-20 | M | | | |
| K0U | BH-15 | F | K0W | BH-15 | F | | | |
| K7Y | BH-17 | F | K7Y | BH-17 | M | K7Y | BH-18 | F |
| K7Y | BH-18 | M | | | | | | |
| K80 | BH-17 | F | K80 | BH-17 | M | K80 | BH-18 | F |
| K80 | BH-18 | M | K81 | BH-17 | F | K81 | BH-17 | M |
| K81 | BH-18 | F | K81 | BH-18 | M | K82 | BH-17 | F |
| K82 | BH-17 | M | K82 | BH-18 | F | K82 | BH-18 | M |
| K83 | BH-17 | F | K83 | BH-17 | M | K83 | BH-18 | F |
| K83 | BH-18 | M | K84 | BH-17 | F | K84 | BH-17 | M |
| K84 | BH-18 | F | K84 | BH-18 | M | K85 | BH-17 | F |
| K85 | BH-17 | M | K85 | BH-18 | F | K85 | BH-18 | M |
| K86 | BH-17 | F | K86 | BH-17 | M | K86 | BH-18 | F |
| K86 | BH-18 | M | | | | | | |
| K87 | BH-17 | F | K87 | BH-17 | M | K87 | BH-18 | F |
| K87 | BH-18 | M | K88 | BH-17 | F | K88 | BH-17 | M |
| K88 | BH-18 | F | K88 | BH-18 | M | K89 | BH-17 | F |
| K89 | BH-17 | M | K89 | BH-18 | F | K89 | BH-18 | M |

| PIN | CONNECTOR NUMBER | MALE / FEMALE | PIN | CONNECTOR NUMBER | MALE / FEMALE | PIN | CONNECTOR NUMBER | MALE / FEMALE |
|---|---|---|---|---|---|---|---|---|
| K8A | BH-17 | F | K8A | BH-17 | M | K8A | BH-18 | F |
| K8A | BH-18 | M | | | | | | |
| KR4 | BH-13 | F | | | | | | |
| KRB | BH-16 | F | KRB | BH-20 | F | KRB | BH-20 | M |
| KSE | BH-13 | M | KSG | BH-13 | M | KSJ | BH-13 | M |
| KSK | BH-13 | M | KSL | BH-13 | M | | | |
| KTD | BH-15 | F | KTQ | BH-15 | M | KTR | BH-15 | M |
| KTS | BH-15 | M | KTT | BH-15 | M | KTU | BH-15 | M |
| KU7 | BH-16 | M | KU8 | BH-16 | M | KUH | BH-13 | F |
| KUQ | BH-13 | F | | | | | | |
| L0L | BH-13 | M | L2P | BH-15 | F | L2Z | BH-16 | F |
| L75 | BH-15 | F | | | | | | |
| LC2 | BH-20 | F | LC2 | BH-20 | M | LCF | BH-13 | F |
| LCG | BH-13 | F | LCH | BH-15 | F | LCT | BH-13 | F |
| LD0 | BH-13 | M | | | | | | |
| LGJ | BH-13 | F | LGK | BH-13 | F | | | |
| LLN | BH-15 | F | LLN | BH-15 | M | LLP | BH-15 | F |
| LLP | BH-15 | M | | | | | | |
| LM0 | BH-16 | F | LM1 | BH-16 | M | LM2 | BH-16 | M |
| LM3 | BH-16 | M | LM4 | BH-16 | M | LM5 | BH-16 | M |
| LM6 | BH-16 | M | LM7 | BH-16 | M | LM8 | BH-16 | M |
| LMS | BH-16 | F | LMT | BH-16 | F | LMU | BH-16 | F |
| LMV | BH-16 | F | LMW | BH-16 | F | LMX | BH-16 | F |
| LMY | BH-16 | F | LMZ | BH-16 | F | | | |
| LNM | BH-13 | M | | | | | | |
| LP0 | BH-16 | F | LQU | BH-13 | M | | | |
| LTS | BH-15 | F | LTS | BH-15 | M | LTT | BH-15 | F |
| LTT | BH-15 | M | LTU | BH-15 | F | LTU | BH-15 | M |
| X4T | BH-20 | F | X4T | BH-20 | M | | | |
| ZVY | BH-6 | M | | | | | | |

# PIN LIST OF SIGNAL CHECK CONNECTOR

EN12Z0802J100009

| PIN | CONNECTOR NUMBER | MALE / FEMALE | PIN | CONNECTOR NUMBER | MALE / FEMALE | PIN | CONNECTOR NUMBER | MALE / FEMALE |
|---|---|---|---|---|---|---|---|---|
| T01 | BI-1 | F | T02 | BI-1 | F | T03 | BI-1 | F |
| T04 | BI-1 | F | T05 | BI-1 | F | T06 | BI-1 | F |
| T07 | BI-1 | F | T08 | BI-1 | F | T09 | BI-1 | F |
| T10 | BI-1 | F | T11 | BI-1 | F | T12 | BI-1 | F |
| T13 | BI-1 | F | T14 | BI-1 | F | T15 | BI-1 | F |
| T16 | BI-1 | F | T17 | BI-1 | F | T18 | BI-1 | F |
| T19 | BI-1 | F | | | | | | |
| T20 | BI-1 | F | T21 | BI-1 | F | T22 | BI-1 | F |
| T23 | BI-1 | F | T24 | BI-1 | F | T25 | BI-1 | F |
| T26 | BI-1 | F | T27 | BI-1 | F | T28 | BI-1 | F |
| T29 | BI-1 | F | | | | | | |
| T30 | BI-1 | F | T31 | BI-1 | F | T32 | BI-1 | F |
| T33 | BI-1 | F | T34 | BI-1 | F | T35 | BI-1 | F |
| T36 | BI-1 | F | T37 | BI-1 | F | T38 | BI-1 | F |
| T39 | BI-1 | F | | | | | | |
| T40 | BI-1 | F | T41 | BI-1 | F | T42 | BI-1 | F |
| T43 | BI-1 | F | T44 | BI-1 | F | T45 | BI-1 | F |
| T46 | BI-1 | F | T47 | BI-1 | F | T48 | BI-1 | F |
| T49 | BI-1 | F | | | | | | |
| T50 | BI-1 | F | T51 | BI-1 | F | T52 | BI-1 | F |
| T53 | BI-1 | F | T54 | BI-1 | F | | | |
| U01 | BI-2 | M | U02 | BI-2 | M | U03 | BI-2 | M |
| U04 | BI-2 | M | U05 | BI-2 | M | U06 | BI-2 | M |
| U07 | BI-2 | M | U08 | BI-2 | M | U09 | BI-2 | M |
| U10 | BI-2 | M | U11 | BI-2 | M | U12 | BI-2 | M |
| U13 | BI-2 | M | U14 | BI-2 | M | U15 | BI-2 | M |
| U16 | BI-2 | M | U17 | BI-2 | M | U18 | BI-2 | M |
| U19 | BI-2 | M | | | | | | |
| U20 | BI-2 | M | U21 | BI-2 | M | U22 | BI-2 | M |
| U23 | BI-2 | M | U24 | BI-2 | M | U25 | BI-2 | M |
| U26 | BI-2 | M | U27 | BI-2 | M | U28 | BI-2 | M |
| U29 | BI-2 | M | | | | | | |

| PIN | CONNECTOR NUMBER | MALE / FEMALE | PIN | CONNECTOR NUMBER | MALE / FEMALE | PIN | CONNECTOR NUMBER | MALE / FEMALE |
|---|---|---|---|---|---|---|---|---|
| U30 | BI-2 | M | U31 | BI-2 | M | U32 | BI-2 | M |
| U33 | BI-2 | M | U34 | BI-2 | M | U35 | BI-2 | M |
| U36 | BI-2 | M | U37 | BI-2 | M | U38 | BI-2 | M |
| U39 | BI-2 | M | | | | | | |
| U40 | BI-2 | M | U41 | BI-2 | M | U42 | BI-2 | M |
| U43 | BI-2 | M | U44 | BI-2 | M | U45 | BI-2 | M |
| U46 | BI-2 | M | U47 | BI-2 | M | U48 | BI-2 | M |
| U49 | BI-2 | M | | | | | | |
| U50 | BI-2 | M | U51 | BI-2 | M | U52 | BI-2 | M |
| U53 | BI-2 | M | U54 | BI-2 | M | | | |
| V01 | BI-3 | F | V02 | BI-3 | F | V03 | BI-3 | F |
| V04 | BI-3 | F | V05 | BI-3 | F | | | |
| W01 | BI-4 | M | W02 | BI-4 | M | W03 | BI-4 | M |
| W04 | BI-4 | M | W05 | BI-4 | M | | | |

# CONNECTOR LIST

EN12Z0802J100010

| Diagram symbol | Connector No. | Electrical equipment name | Wiring diagram listing page | Three-dimensional connector diagram (Position of connector) listing page |
|---|---|---|---|---|
| A | A-2 | Starter switch | EL02-16 | EL02-157 |
| | A-10 | Fuel filter heater sensor | EL02-16 | EL02-164 |
| B | B-1 | Common rail J/C No.2 | EL02-22 | EL02-158 |
| | B-3 | J/C signal | EL02-22 | EL02-158 |
| | B-4 | J/C ground | EL02-22 | EL02-159 |
| | B-7 | Starter | EL02-22 | EL02-157 |
| | B-8 | Clutch switch | EL02-22 | EL02-157 |
| | B-9 | Neutral switch | EL02-22 | EL02-160 |
| | B-10 | Sub starter switch | EL02-22 | EL02-160 |
| D | D-1 | Glow control unit | EL02-24 | EL02-157 |
| | D-2 | Glow plug No.1 | EL02-24 | EL02-157 |
| | D-3 | Glow plug No.2 | EL02-24 | EL02-157 |
| | D-4 | Glow plug No.3 | EL02-24 | EL02-157 |
| | D-5 | Glow plug No.4 | EL02-24 | EL02-157 |
| E | E-1 | Alternator | EL02-25 | EL02-157 |
| F | F-1 | Van light switch | EL02-26 | EL02-160 |
| | F-2 | Spare power source (For Battery) | EL02-26 | EL02-160 |
| | F-3 | Spare power source (For Starter switch ON) | EL02-26 | EL02-160 |
| | F-4 | Common rail J/C No.2 | EL02-26 | EL02-158 |
| | F-5 | Spare power source | EL02-26 | EL02-160 |
| | F-6 | Option connector (For Cab) | EL02-26 | EL02-160 |
| | F-7 | Option connector (For Chassis) | EL02-26 | EL02-160 |
| G | G-1 | Fog light switch | EL02-27 | EL02-160 |
| | G-2 | Fog light power source | EL02-27 | EL02-160 |
| H | H-1 | J/C ground | EL02-28 | EL02-159 |
| | H-2 | Common rail J/C No.1 | EL02-28 | EL02-158 |
| | H-3 | J/C ground 4P | EL02-28 | EL02-159 |
| | H-4 | PM sensor | EL02-28 | EL02-173 |

| Diagram symbol | Connector No. | Electrical equipment name | Wiring diagram listing page | Three-dimensional connector diagram (Position of connector) listing page |
|---|---|---|---|---|
| I | I-1-1 | Combination meter | EL02-32 | EL02-161 |
| | I-1-2 | Combination meter | EL02-32 | EL02-161 |
| | I-1-3 | Combination meter | EL02-32 | EL02-161 |
| | I-2 | Rheostat | EL02-32 | EL02-161 |
| | I-3 | Common rail J/C No.1 | EL02-32 | EL02-158 |
| | I-4 | J/C signal | EL02-32 | EL02-158 |
| | I-5 | Common rail J/C No.2 | EL02-32 | EL02-158 |
| | I-6 | Information display control switch | EL02-32 | EL02-161 |
| | I-7 | Coolant warning relay | EL02-32 | EL02-161 |
| | I-8 | Parking brake off diode (For center parking) | EL02-32 | EL02-158 |
| | I-10 | Parking switch | EL02-32 | EL02-161 |
| | I-11 | J/C ground 4P | EL02-32 | EL02-159 |
| | I-12 | J/C ground | EL02-32 | EL02-159 |
| | I-13 | Parking brake 4P J/C | EL02-32 | EL02-157 |
| | I-14 | Air suspension dump diode No.1 | EL02-32 | EL02-157 |
| J | J-1 | Speed sensor (For HYDRO MAX brake and MTM) | EL02-36 | EL02-164 |
| | J-2 | Speed sensor (For full air brake and MTM) | EL02-36 | EL02-164 |
| | J-3 | Air pressure sensor front (For full air brake) | EL02-36 | EL02-164 |
| | J-4 | Air pressure sensor rear (For full air brake) | EL02-36 | EL02-164 |
| | J-5 | Fuel sensor LH | EL02-36 | EL02-164 |
| | J-6 | Manual differential lock switch | EL02-36 | EL02-164 |
| | J-7 | Manual differential lock magnetic valve | EL02-36 | EL02-164 |
| | J-8 | Coolant level switch | EL02-36 | EL02-164 |
| | J-9 | Engine coolant level sensor | EL02-36 | EL02-164 |
| | J-10 | Spring brake switch (For wheel parking) | EL02-36 | EL02-162 |
| | J-11 | Differential switch | EL02-36 | EL02-176 |
| | J-12 | Buzzer off switch (For wheel parking) | EL02-36 | EL02-162 |
| | J-13 | Fuel sensor RH | EL02-36 | EL02-164 |

| Diagram symbol | Connector No. | Electrical equipment name | Wiring diagram listing page | Three-dimensional connector diagram (Position of connector) listing page |
|---|---|---|---|---|
| K | K-4-1 | Daytime running light ECU | EL02-40 | EL02-162 |
| | K-4-2 | Daytime running light ECU | EL02-40 | EL02-162 |
| | K-6 | Light and turn switch | EL02-40 | EL02-162 |
| | K-7 | Head light RH | EL02-40 | EL02-163 |
| | K-8 | Head light LH | EL02-40 | EL02-163 |
| | K-9 | Common rail J/C No.2 | EL02-40 | EL02-158 |
| | K-10 | Light and turn switch | EL02-40 | EL02-162 |
| | K-11 | Heater and light mirror RH | EL02-40 | EL02-163 |
| | K-12 | Heater and light mirror LH | EL02-40 | EL02-163 |
| | K-13 | Identification light LH | EL02-40 | EL02-163 |
| | K-14 | Identification light center | EL02-40 | EL02-163 |
| | K-15 | Identification light RH | EL02-40 | EL02-163 |
| | K-16 | Roof clearance light LH | EL02-40 | EL02-163 |
| | K-17 | Roof clearance light RH | EL02-40 | EL02-163 |
| | K-18 | Common rail J/C No.1 | EL02-40 | EL02-158 |
| L | L-1 | Stop and turn controller | EL02-44 | EL02-165 |
| | L-2 | Wiper and retarder switch | EL02-44 | EL02-165 |
| | L-3 | Light and turn switch | EL02-44 | EL02-165 |
| | L-4 | Common rail J/C No.2 | EL02-44 | EL02-158 |
| | L-5 | J/C ground | EL02-44 | EL02-159 |
| | L-6 | Stop light relay | EL02-44 | EL02-172 |
| | L-7 | Common rail J/C No.1 | EL02-44 | EL02-158 |
| | L-8-1 | Stop light switch (For Full air brake) | EL02-44 | EL02-165 |
| | L-8-2 | Stop light switch (For HYDRO MAX brake) | EL02-44 | EL02-165 |
| | L-9 | STP TRANS diode | EL02-44 | EL02-169 |
| | L-10 | Rear combination light LH | EL02-44 | EL02-165 |
| | L-11 | Side turn light LH (For Fender) | EL02-44 | EL02-165 |
| | L-12 | Front turn light LH | EL02-44 | EL02-165 |
| | L-13 | Front turn light RH | EL02-44 | EL02-165 |
| | L-14 | Side turn light RH (For Fender) | EL02-44 | EL02-165 |
| | L-15 | Rear combination light RH | EL02-44 | EL02-165 |
| | L-16 | Back-up light switch | EL02-44 | EL02-164 |
| | L-17 | Back-up buzzer | EL02-44 | EL02-165 |
| | L-18 | Spare chassis (For Power supply) | EL02-44 | — |

| Diagram symbol | Connector No. | Electrical equipment name | Wiring diagram listing page | Three-dimensional connector diagram (Position of connector) listing page |
|---|---|---|---|---|
| M | M-1 | Dome light LH | EL02-48 | EL02-166 |
| | M-2 | Dome light RH | EL02-48 | EL02-166 |
| | M-3 | Courtesy switch front LH | EL02-48 | EL02-166 |
| | M-4 | Courtesy switch front RH | EL02-48 | EL02-166 |
| | M-5 | Key-less entry controller | EL02-48 | EL02-165 |
| N | N-1 | Washer pump motor | EL02-49 | EL02-165 |
| | N-2 | Wiper relay | EL02-49 | EL02-165 |
| | N-3 | Wiper motor | EL02-49 | EL02-165 |
| | N-4 | Wiper and retarder switch | EL02-49 | EL02-165 |
| O | O-1 | Mirror heater switch | EL02-50 | EL02-161 |
| | O-3 | Heater and light mirror LH | EL02-50 | EL02-163 |
| | O-4 | Heater and light mirror RH | EL02-50 | EL02-163 |
| P | P-1 | Remote control mirror switch | EL02-51 | EL02-160 |
| | P-2 | Remote control mirror LH | EL02-51 | EL02-163 |
| | P-3 | Remote control mirror RH | EL02-51 | EL02-163 |
| Q | Q-2 | Horn switch | EL02-52 | EL02-166 |
| | Q-3-1 | Horn (Low) | EL02-52 | EL02-168 |
| | Q-3-2 | Horn (Low) | EL02-52 | EL02-168 |
| | Q-4-1 | Horn (High) | EL02-52 | EL02-168 |
| | Q-4-2 | Horn (High) | EL02-52 | EL02-168 |
| R | R-2 | Air horn switch | EL02-53 | EL02-161 |
| | R-3 | Air horn magnetic valve | EL02-53 | EL02-168 |
| | R-4 | J/C ground 4P | EL02-53 | EL02-159 |
| S | S-1 | Cigarette lighter or Accessory socket | EL02-54 | EL02-161 |
| T | T-1 | Driver seat master switch | EL02-55 | EL02-167 |
| | T-2 | Passenger seat sub switch | EL02-55 | EL02-167 |
| | T-3 | Power window motor (For Driver side) | EL02-55 | EL02-167 |
| | T-4 | Power window motor (For Passenger side) | EL02-55 | EL02-167 |

| Diagram symbol | Connector No. | Electrical equipment name | Wiring diagram listing page | Three-dimensional connector diagram (Position of connector) listing page |
|---|---|---|---|---|
| U | U-1 | Key-less entry short circuit connector | EL02-56 | EL02-165 |
| | U-2 | Key-less entry controller | EL02-56 | EL02-165 |
| | U-3 | Power door lock motor (For Driver side) | EL02-56 | EL02-167 |
| | U-4 | Power door lock motor (For Passenger side) | EL02-56 | EL02-167 |
| | U-5 | Power door lock controller | EL02-56 | EL02-165 |
| | U-6 | Power door lock switch (For Driver side) | EL02-56 | EL02-167 |
| | U-7 | Wiper and retarder switch | EL02-56 | EL02-165 |
| | U-8 | Stop and turn controller | EL02-56 | EL02-165 |
| | U-9 | Light and turn switch | EL02-56 | EL02-165 |
| V | V-2 | Radio/Audio unit | EL02-58 | EL02-167 |
| | V-3 | Front speaker LH | EL02-58 | EL02-167 |
| | V-4 | Front speaker RH | EL02-58 | EL02-167 |
| | V-5 | Common rail J/C No.2 | EL02-58 | EL02-158 |
| | V-6 | Common rail J/C No.1 | EL02-58 | EL02-158 |
| W | W-2 | Heater and cooler unit | EL02-60 | EL02-168 |
| | W-3 | Blower motor | EL02-60 | EL02-168 |
| | W-4 | Blower switch | EL02-60 | EL02-168 |
| | W-5 | Air conditioner switch | EL02-60 | EL02-168 |
| | W-7 | Pressure switch | EL02-60 | EL02-168 |
| | W-8 | Compressor | EL02-60 | EL02-170 |
| | W-9 | Common rail J/C No.2 | EL02-60 | EL02-158 |
| X | X-1 | Common rail J/C No.1 | EL02-62 | EL02-158 |
| | X-2 | Accelerator sensor | EL02-62 | EL02-169 |
| | X-3 | Common rail J/C No.2 | EL02-62 | EL02-158 |

| Diagram symbol | Connector No. | Electrical equipment name | Wiring diagram listing page | Three-dimensional connector diagram (Position of connector) listing page |
|---|---|---|---|---|
| Y | Y-7-1 | Engine ECU (Front side) | EL02-66 | EL02-169 |
| | Y-7-2 | Engine ECU (Rear side) | EL02-66 | EL02-169 |
| | Y-7-3 | Engine ECU (Middle) | EL02-66 | EL02-169 |
| | Y-8 | Oil pressure switch | EL02-66 | EL02-170 |
| | Y-9 | Injector 6 | EL02-66 | EL02-171 |
| | Y-10 | Injector 5 | EL02-66 | EL02-171 |
| | Y-11 | Injector 4 | EL02-66 | EL02-171 |
| | Y-12 | Injector 3 | EL02-66 | EL02-171 |
| | Y-13 | Injector 2 | EL02-66 | EL02-171 |
| | Y-14 | Injector 1 | EL02-66 | EL02-171 |
| | Y-15 | Suction control valve | EL02-66 | EL02-170 |
| | Y-16 | Engine speed sub sensor | EL02-66 | EL02-170 |
| | Y-17 | Engine speed main sensor | EL02-66 | EL02-170 |
| | Y-18 | Engine coolant temperature sensor 1 | EL02-66 | EL02-170 |
| | Y-19 | Fuel temperature sensor | EL02-66 | EL02-170 |
| | Y-20 | Common rail pressure sensor | EL02-66 | EL02-170 |
| | Y-21 | Intake air temperature sensor (intake manifold) | EL02-66 | EL02-170 |
| | Y-22 | Boost pressure sensor | EL02-66 | EL02-170 |
| | Y-23 | Intake air temperature sensor (intercooler outlet) | EL02-66 | EL02-170 |
| | Y-24 | EGR gas temperature sensor | EL02-66 | EL02-170 |
| | Y-25 | Air flow sensor | EL02-66 | EL02-170 |
| | Y-26 | Engine coolant temperature sensor 2 | EL02-66 | EL02-170 |
| | Y-27 | PTO accelerator sensor | EL02-66 | EL02-160 |
| | Y-28 | Exhaust gas temperature sensor 1 (ATC upstream) | EL02-66 | EL02-170 |
| | Y-29 | Exhaust gas temperature sensor 2 (ATC downstream) | EL02-66 | EL02-170 |
| Z | Z-1 | J/C signal | EL02-70 | EL02-158 |
| | Z-2 | Neutral switch | EL02-70 | EL02-172 |
| | Z-3 | Exhaust brake solenoid valve | EL02-70 | EL02-158 |
| | Z-4-1 | Engine ECU (Rear side) | EL02-70 | EL02-169 |
| | Z-4-2 | Engine ECU (Middle) | EL02-70 | EL02-169 |

| Diagram symbol | Connector No. | Electrical equipment name | Wiring diagram listing page | Three-dimensional connector diagram (Position of connector) listing page |
|---|---|---|---|---|
| AA | AA-1-1 | Engine ECU (Rear side) | EL02-72 | EL02-169 |
| | AA-1-2 | Engine ECU (Middle) | EL02-72 | EL02-169 |
| | AA-2 | Exhaust brake solenoid valve | EL02-72 | EL02-158 |
| | AA-3 | J/C signal | EL02-72 | EL02-158 |
| | AA-5 | DPR manual regeneration switch | EL02-72 | EL02-161 |
| AC | AC-1 | PTO switch 1 | EL02-76 | EL02-160 |
| | AC-2 | PTO switch 2 | EL02-76 | EL02-160 |
| | AC-3 | PTO cut relay | EL02-76 | EL02-160 |
| | AC-4 | Engine stop switch | EL02-76 | EL02-160 |
| | AC-5 | Accelerator sensor | EL02-76 | EL02-169 |
| | AC-6 | PTO accelerator sensor | EL02-76 | EL02-160 |
| | AC-7-1 | Engine ECU (Rear side) | EL02-76 | EL02-169 |
| | AC-7-2 | Engine ECU (Middle) | EL02-76 | EL02-169 |
| AD | AD-1 | Engine ECU (Front side) | EL02-78 | EL02-169 |
| | AD-2 | VNT actuator | EL02-78 | EL02-170 |
| | AD-3 | VNT controller | EL02-78 | EL02-170 |
| | AD-4 | EGR valve | EL02-78 | EL02-170 |

| Diagram symbol | Connector No. | Electrical equipment name | Wiring diagram listing page | Three-dimensional connector diagram (Position of connector) listing page |
|---|---|---|---|---|
| AE | AE-1 | DPR manual regeneration switch | EL02-80 | EL02-161 |
| | AE-2 | J/C SIGNAL | EL02-80 | EL02-158 |
| | AE-3 | Exhaust gas temperature sensor 1 (ATC upstream) | EL02-80 | EL02-170 |
| | AE-4 | Exhaust gas temperature sensor 3 (DOC inlet) | EL02-80 | EL02-173 |
| | AE-5 | Exhaust gas temperature sensor 4 (DPR inlet) | EL02-80 | EL02-173 |
| | AE-6 | Exhaust gas temperature sensor 5 (DPR outlet) | EL02-80 | EL02-173 |
| | AE-7 | Differential pressure sensor | EL02-80 | EL02-173 |
| | AE-8 | PTO accelerator sensor | EL02-80 | EL02-160 |
| | AE-9-1 | Engine ECU (Front side) | EL02-80 | EL02-169 |
| | AE-9-2 | Engine ECU (Rear side) | EL02-80 | EL02-169 |
| | AE-9-3 | Engine ECU (Middle) | EL02-80 | EL02-169 |
| | AE-10 | Common rail J/C No.2 | EL02-80 | EL02-158 |
| | AE-12 | Intake throttle valve position sensor | EL02-80 | EL02-170 |
| | AE-13 | Engine coolant temperature sensor 1 | EL02-80 | EL02-170 |
| | AE-14 | Air flow sensor | EL02-80 | EL02-170 |
| | AE-15 | Aftertreatment fuel injection line pressure sensor | EL02-80 | EL02-170 |
| | AE-16 | Aftertreatment fuel injector (Fuel dosing valve) | EL02-80 | EL02-170 |
| | AE-17 | VNT controller | EL02-80 | EL02-170 |
| | AE-18 | Boost pressure sensor | EL02-80 | EL02-170 |
| | AE-19 | Fuel cut valve | EL02-80 | EL02-170 |
| | AE-20 | PM sensor | EL02-80 | EL02-173 |
| | AE-21 | Exhaust gas temperature sensor 2 (ACT downstream) | EL02-80 | EL02-170 |
| AF | AF-1 | Brake switch (For HYDRO MAX brake) | EL02-84 | EL02-165 |
| | AF-2 | Brake switch (For Full air brake) | EL02-84 | EL02-162 |
| | AF-3 | Common rail J/C No.1 | EL02-84 | EL02-158 |
| | AF-4 | Engine ECU (Rear side) | EL02-84 | EL02-169 |

| Diagram symbol | Connector No. | Electrical equipment name | Wiring diagram listing page | Three-dimensional connector diagram (Position of connector) listing page |
|---|---|---|---|---|
| AG | AG-1-1 | Vehicle control ECU | EL02-86 | EL02-173 |
| | AG-1-2 | Vehicle control ECU | EL02-86 | EL02-173 |
| | AG-1-3 | Vehicle control ECU | EL02-86 | EL02-173 |
| | AG-1-4 | Vehicle control ECU | EL02-86 | EL02-173 |
| | AG-1-5 | Vehicle control ECU | EL02-86 | EL02-173 |
| | AG-2 | DLC connector (16P) | EL02-86 | EL02-171 |
| | AG-4 | Common rail J/C No.1 | EL02-86 | EL02-158 |
| | AG-5 | J/C ground | EL02-86 | EL02-159 |
| | AG-6 | Common rail J/C No.2 | EL02-86 | EL02-158 |
| | AG-7 | Actuator J/C No.1 | EL02-86 | EL02-157 |
| | AG-8 | Actuator J/C No.2 | EL02-86 | EL02-173 |
| | AG-9 | Actuator J/C No.3 | EL02-86 | EL02-159 |
| AH | AH-1-1 | Vehicle control ECU | EL02-90 | EL02-173 |
| | AH-1-2 | Vehicle control ECU | EL02-90 | EL02-173 |
| | AH-1-3 | Vehicle control ECU | EL02-90 | EL02-173 |
| | AH-2 | Economy running switch | EL02-90 | EL02-161 |
| | AH-3 | J/C ground | EL02-90 | EL02-159 |
| | AH-4 | J/C signal | EL02-90 | EL02-158 |
| | AH-5 | Parking brake 4P J/C | EL02-90 | EL02-157 |
| | AH-6 | Air suspension dump diode No.1 | EL02-90 | EL02-157 |
| | AH-7 | Actuator J/C No.1 | EL02-90 | EL02-157 |
| | AH-8 | Common rail J/C No.1 | EL02-90 | EL02-158 |
| AI | AI-1-1 | Vehicle control ECU | EL02-94 | EL02-173 |
| | AI-1-2 | Vehicle control ECU | EL02-94 | EL02-173 |
| | AI-2 | J/C signal | EL02-94 | EL02-158 |
| | AI-3 | Set/resume switch | EL02-94 | EL02-161 |
| | AI-4 | Cruise control main switch | EL02-94 | EL02-161 |
| | AI-5 | Idle up signal | EL02-94 | EL02-160 |
| | AI-6 | Actuator J/C No.1 | EL02-94 | EL02-157 |
| | AI-7 | Actuator J/C No.3 | EL02-94 | EL02-159 |

| Diagram symbol | Connector No. | Electrical equipment name | Wiring diagram listing page | Three-dimensional connector diagram (Position of connector) listing page |
|---|---|---|---|---|
| AJ | AJ-1 | Vehicle control ECU | EL02-96 | EL02-173 |
| | AJ-3 | Exhaust clutch switch | EL02-96 | EL02-171 |
| | AJ-4 | Wiper and retarder switch | EL02-96 | EL02-165 |
| | AJ-5 | Actuator J/C No.1 | EL02-96 | EL02-157 |
| | AJ-6 | Actuator J/C No.3 | EL02-96 | EL02-159 |
| AL | AL-1 | Dosing control 53P | EL02-98 | EL02-173 |
| | AL-2 | Dosing control 86P | EL02-98 | EL02-173 |
| | AL-3 | DEF pump | EL02-98 | EL02-173 |
| | AL-4 | Common rail CAN J/C No.4 | EL02-98 | EL02-173 |
| | AL-5 | NOx sensor 1 | EL02-98 | EL02-173 |
| | AL-6 | NOx sensor 2 | EL02-98 | EL02-173 |
| | AL-7 | Ambient air temperature sensor | EL02-98 | EL02-173 |
| | AL-8 | Common rail CAN J/C No.1 | EL02-98 | EL02-173 |
| | AL-9 | DEF dosing valve | EL02-98 | EL02-173 |
| | AL-10 | DEF sensor | EL02-98 | EL02-173 |
| | AL-11 | Coolant cut off valve | EL02-98 | EL02-173 |
| | AL-12 | Exhaust gas temperature sensor (SCR inlet) | EL02-98 | EL02-173 |
| | AL-13 | Engine ECU (Rear side) | EL02-98 | EL02-169 |
| | AL-14 | Engine ECU (Front side) | EL02-98 | EL02-169 |
| | AL-15 | External resistance | EL02-98 | EL02-173 |
| | AL-16 | DEF heater 1 | EL02-98 | EL02-173 |
| | AL-17 | DEF heater 2 | EL02-98 | EL02-173 |
| | AL-18 | DEF heater 3 | EL02-98 | EL02-173 |

| Diagram symbol | Connector No. | Electrical equipment name | Wiring diagram listing page | Three-dimensional connector diagram (Position of connector) listing page |
|---|---|---|---|---|
| AM | AM-1 | ABS ECU E | EL02-102 | EL02-172 |
| | AM-2 | ABS ECU F | EL02-102 | EL02-172 |
| | AM-4 | Common rail J/C No.1 | EL02-102 | EL02-158 |
| | AM-5 | ABS diagnosis switch | EL02-102 | EL02-172 |
| | AM-6 | J/C ground | EL02-102 | EL02-159 |
| | AM-7 | Modulator front LH | EL02-102 | EL02-174 |
| | AM-8 | Wheel sensor front LH | EL02-102 | EL02-174 |
| | AM-9 | Modulator front RH | EL02-102 | EL02-174 |
| | AM-10 | Wheel sensor front RH | EL02-102 | EL02-174 |
| | AM-11 | Modulator rear LH | EL02-102 | EL02-174 |
| | AM-12 | Wheel sensor rear LH | EL02-102 | EL02-174 |
| | AM-13 | Modulator rear RH | EL02-102 | EL02-174 |
| | AM-14 | Wheel sensor rear RH | EL02-102 | EL02-174 |
| AN | AN-1 | ABS HYDRO MAX unit with ECU | EL02-106 | EL02-175 |
| | AN-3 | J/C ground | EL02-106 | EL02-159 |
| | AN-4 | Common rail J/C No.1 | EL02-106 | EL02-158 |
| | AN-6 | Wheel sensor front LH | EL02-106 | EL02-174 |
| | AN-7 | Wheel sensor front RH | EL02-106 | EL02-174 |
| | AN-8 | Wheel sensor rear LH | EL02-106 | EL02-174 |
| | AN-9 | Wheel sensor rear RH | EL02-106 | EL02-174 |
| AO | AO-1 | Monitor module | EL02-108 | EL02-175 |
| | AO-2 | Motor relay | EL02-108 | EL02-176 |
| | AO-3 | Motor pump | EL02-108 | EL02-176 |
| | AO-4 | Flow switch | EL02-108 | EL02-176 |
| | AO-5 | Differential switch | EL02-108 | EL02-176 |
| | AO-6 | J/C ground | EL02-108 | EL02-159 |

| Diagram symbol | Connector No. | Electrical equipment name | Wiring diagram listing page | Three-dimensional connector diagram (Position of connector) listing page |
|---|---|---|---|---|
| AQ | AQ-1 | ALLISON 2000 TRANS ECU | EL02-110 | EL02-176 |
| | AQ-3 | J/C ground | EL02-110 | EL02-159 |
| | AQ-4 | TRANS mode switch | EL02-110 | EL02-177 |
| | AQ-5 | Common rail J/C No.1 | EL02-110 | EL02-158 |
| | AQ-6 | STP TRANS diode | EL02-110 | EL02-169 |
| | AQ-7 | J/C signal | EL02-110 | EL02-158 |
| | AQ-8 | Turbine speed sensor | EL02-110 | EL02-176 |
| | AQ-9 | Main transmission | EL02-110 | EL02-176 |
| | AQ-10 | Output speed sensor | EL02-110 | EL02-176 |
| | AQ-11 | Engine speed sensor | EL02-110 | EL02-176 |
| | AQ-12 | PTO service | EL02-110 | — |
| | AQ-15 | TRANS stop NC diode | EL02-110 | EL02-162 |
| AR | AR-1 | ALLISON 3000RDS TRANS ECU | EL02-114 | EL02-177 |
| | AR-2 | MAIN Transmission | EL02-114 | EL02-177 |
| | AR-3 | Output speed sensor | EL02-114 | EL02-177 |
| | AR-4 | Engine speed sensor | EL02-114 | EL02-177 |
| | AR-5 | Selector | EL02-114 | EL02-178 |
| | AR-6 | J/C ground | EL02-114 | EL02-159 |
| | AR-7 | STP TRANS diode | EL02-114 | EL02-169 |
| | AR-8 | Common rail J/C No.1 | EL02-114 | EL02-158 |
| | AR-9 | J/C signal | EL02-114 | EL02-158 |
| | AR-11 | PTO service | EL02-114 | — |
| | AR-14 | TRANS stop NC diode | EL02-114 | EL02-162 |
| AT | AT-1 | DLC connector (16P) | EL02-118 | EL02-171 |
| | AT-2 | Common rail J/C No.2 | EL02-118 | EL02-158 |
| | AT-3-1 | Vehicle control ECU | EL02-118 | EL02-173 |
| | AT-3-2 | Vehicle control ECU | EL02-118 | EL02-173 |
| | AT-4 | J/C ground | EL02-118 | EL02-159 |
| AU | AU-1 | Diagnosis connector (9P) | EL02-120 | EL02-172 |
| | AU-2 | Common rail J/C No.2 | EL02-120 | EL02-158 |
| | AU-3 | J/C ground | EL02-120 | EL02-159 |
| AV | AV-1 | Differential lock switch | EL02-121 | EL02-160 |
| | AV-2 | Manual differential lock magnetic valve | EL02-121 | EL02-164 |

| Diagram symbol | Connector No. | Electrical equipment name | Wiring diagram listing page | Three-dimensional connector diagram (Position of connector) listing page |
|---|---|---|---|---|
| AW | AW-1-1 | Air dryer (For HYDRO MAX brake) | EL02-122 | EL02-178 |
| | AW-1-2 | Air dryer (For Full air brake) | EL02-122 | EL02-178 |
| | AW-2 | Rear combination light LH | EL02-122 | EL02-165 |
| AX | AX-1 | Air suspension dump switch | EL02-124 | EL02-161 |
| | AX-2 | Combination meter (24P) | EL02-124 | EL02-161 |
| | AX-4 | Air suspension dump diode No.1 | EL02-124 | EL02-157 |
| | AX-5 | Air suspension dump magnetic valve | EL02-124 | EL02-162 |
| | | | | EL02-174 |
| | AX-6 | Low pressure switch No.3 | EL02-124 | EL02-174 |
| | AX-7 | Common rail J/C No.2 | EL02-124 | EL02-158 |
| | AX-9 | Parking switch | EL02-124 | EL02-161 |
| | AX-10 | J/C ground | EL02-124 | EL02-159 |
| | AX-12 | Buzzer off switch (For wheel parking) | EL02-124 | EL02-162 |
| | AX-13 | Air suspension dump diode No.2 | EL02-124 | EL02-157 |
| | AX-14 | Parking brake 4P J/C | EL02-124 | EL02-157 |
| | AX-15 | J/C signal | EL02-124 | EL02-158 |
| AY | AY-1 | Selector | EL02-126 | EL02-178 |
| | AY-2-1 | Vehicle control ECU | EL02-126 | EL02-173 |
| | AY-2-2 | Vehicle control ECU | EL02-126 | EL02-173 |
| | AY-3 | Diagnosis connector (9P) | EL02-126 | EL02-172 |
| | AY-4-1 | ALLISON 2000 TRANS ECU | EL02-126 | EL02-176 |
| | AY-4-2 | ALLISON 3000RDS TRANS ECU | EL02-126 | EL02-177 |
| | AY-5 | CAN J/C | EL02-126 | EL02-169 |
| | AY-6 | Telematics unit | EL02-126 | EL02-173 |

| Diagram symbol | Connector No. | Electrical equipment name | Wiring diagram listing page | Three-dimensional connector diagram (Position of connector) listing page |
|---|---|---|---|---|
| AZ | AZ-1 | DLC connector (16P) | EL02-128 | EL02-171 |
| | AZ-2-1 | Vehicle control ECU | EL02-128 | EL02-173 |
| | AZ-2-2 | Vehicle control ECU | EL02-128 | EL02-173 |
| | AZ-3 | CAN J/C 2 High | EL02-128 | EL02-158 |
| | AZ-4 | CAN J/C 2 Low | EL02-128 | EL02-158 |
| | AZ-5 | CAN J/C 3 High | EL02-128 | EL02-159 |
| | AZ-6 | CAN J/C 3 Low | EL02-128 | EL02-159 |
| | AZ-7 | Dosing control unit 53P | EL02-128 | EL02-173 |
| | AZ-8 | Engine ECU (Rear side) | EL02-128 | EL02-169 |
| | AZ-9 | V J/C | EL02-128 | EL02-173 |
| | AZ-10 | Telematics unit | EL02-128 | EL02-173 |
| BA | BA-1 | CAN TMN 6 | EL02-132 | EL02-158 |
| | BA-2 | Engine ECU (Front side) | EL02-132 | EL02-169 |
| | BA-3 | EGR valve | EL02-132 | EL02-170 |
| | BA-4 | VNT controller | EL02-132 | EL02-170 |
| | BA-5 | NOx sensor 1 | EL02-132 | EL02-173 |
| | BA-6 | NOx sensor 2 | EL02-132 | EL02-173 |
| | BA-7 | Dosing control unit 53P | EL02-132 | EL02-173 |
| | BA-8 | Common rail CAN J/C No.1 | EL02-132 | EL02-173 |
| | BA-9 | Common rail CAN J/C No.2 | EL02-132 | EL02-173 |
| | BA-10 | Common rail CAN J/C No.3 | EL02-132 | EL02-173 |
| | BA-11 | Common rail CAN J/C No.4 | EL02-132 | EL02-173 |
| | BA-12 | DEF sensor | EL02-132 | EL02-173 |
| | BA-13 | PM sensor | EL02-132 | EL02-173 |
| BB | BB-1 | Telematics unit | EL02-136 | EL02-173 |
| | BB-2 | Common rail J/C No.2 | EL02-136 | EL02-158 |
| BD | BD-1 | Plug heater | EL02-137 | EL02-171 |
| | BD-2 | Outlet cord | EL02-137 | EL02-171 |
| BE | BE-1 | Common rail J/C 1 | EL02-138 | EL02-158 |
| BF | BF-1 | Common rail J/C 2 | EL02-140 | EL02-158 |

| Diagram symbol | Connector No. | Electrical equipment name | Wiring diagram listing page | Three-dimensional connector diagram (Position of connector) listing page |
|---|---|---|---|---|
| BG | BG-1 | Cab main harness to chassis front harness STD 1 | EL02-142 | EL02-179 |
| | BG-2 | Cab main harness to chassis front harness STD 2 | EL02-142 | EL02-179 |
| | BG-3 | Cab main harness to chassis front harness OPT1 | EL02-143 | EL02-179 |
| | BG-4 | Cab main harness to chassis front harness PWR | EL02-143 | EL02-179 |
| | BG-5 | Cab main harness to engine No.1 harness 22P | EL02-144 | EL02-179 |
| | BG-6 | Cab main harness to engine No.1 harness 38P | EL02-145 | EL02-179 |
| | BG-7 | Chassis front harness to engine No.1 harness 6P (GND) | EL02-146 | EL02-179 |
| | BG-8 | Chassis front harness to engine No.1 harness 26P | EL02-146 | EL02-179 |

| Diagram symbol | Connector No. | Electrical equipment name | Wiring diagram listing page | Three-dimensional connector diagram (Position of connector) listing page |
|---|---|---|---|---|
| BH | BH-1 | Cab main harness to door LH harness 1 | EL02-147 | EL02-179 |
| | BH-2 | Cab main harness to door LH harness 2 | EL02-147 | EL02-179 |
| | BH-3 | Cab main harness to door RH harness | EL02-147 | EL02-179 |
| | BH-4 | Cab main harness to floor harness | EL02-148 | EL02-179 |
| | BH-5 | Cab main harness to roof harness | EL02-148 | EL02-179 |
| | BH-6 | Cab main harness to flasher sub harness | EL02-148 | EL02-179 |
| | BH-7 | Cab main harness to AT shift harness | EL02-149 | EL02-178 |
| | BH-8 | Cab main harness to clutch switch harness | EL02-149 | EL02-171 |
| | BH-9 | Chassis front harness to differential lock harness | EL02-150 | EL02-179 |
| | BH-10 | Chassis front harness to intermediate harness (For full air brake) | EL02-150 | EL02-179 |
| | BH-11 | Chassis front harness to intermediate harness (For HYDRO MAX brake) | EL02-150 | EL02-179 |
| | BH-12 | Chassis front harness to head light harness | EL02-151 | EL02-179 |
| | BH-13 | Chassis front harness to engine No.2 harness | EL02-151 | EL02-179 |
| | BH-14 | Engine No.1 harness to engine No.3 harness glow (Glow plug) | EL02-152 | EL02-180 |
| | BH-15 | Engine No.1 harness to engine No.1 sub harness 12P | EL02-152 | EL02-180 |
| | BH-16 | Engine No.1 harness to engine No.1 sub harness 16P | EL02-152 | EL02-180 |
| | BH-17 | Engine No.1 harness to link-up connector | EL02-153 | EL02-180 |
| | BH-18 | Link-up connector to injector harness | EL02-153 | EL02-180 |
| | BH-19 | Chassis front harness to intermediate harness (For air suspension dump) | EL02-154 | EL02-179 |
| | BH-20 | Engine sub harness RH to fuel sub harness | EL02-154 | EL02-180 |
| | BH-21 | Muffler harness front to rear A | EL02-155 | EL02-181 |
| | BH-22 | Muffler harness front to rear B | EL02-155 | EL02-181 |
| | BH-23 | Chassis front harness (Starter relay) to starter harness | EL02-155 | EL02-181 |
| BI | BI-1 | Signal check connector No.1 | EL02-156 | EL02-181 |
| | BI-2 | Signal check connector No.2 | EL02-156 | EL02-181 |
| | BI-3 | Signal check connector No.3 | EL02-156 | EL02-181 |
| | BI-4 | Signal check connector No.4 | EL02-156 | EL02-181 |

**Hino Motors Sales U.S.A., Inc.**
**41180 Bridge Street, Novi, MI 48375**
**Telephone: (248) 699-9300**
**PRINTED IN JAPAN**

---

**Pub.No. S1-UNAE14A 2/2 '16.10**

MENU

# FOREWORD

This workshop manual has been prepared to provide information regarding repair procedures on Hino Trucks.

Applicable for J08E-VB, WU engine

When making any repairs on your vehicle, be careful not to be injured through improper procedures.
As for maintenance items, refer to the Driver's / Owner's Manual.
All information and specifications in this manual are based upon the latest product information available at the time of printing.
Hino Motors Sales U.S.A., Inc. reserves the right to make changes at any time without prior notice.

**Hino Motors Sales U.S.A. , Inc.**

# CHAPTER REFERENCES REGARDING THIS WORKSHOP MANUAL

Use this chart to the appropriate chapter numbers for servicing your particular truck.

| CHAPTER | MANUAL NO. | S5-UJ08E14A (U.S.A.), S5-CJ08E14A (CANADA) |
|---|---|---|
| | MODEL | J08E-VB, WU |
| GENERAL INTRODUCTION | | GN01-001 |
| ENGINE INTRODUCTION | | EN01-001 |
| ENGINE MECHANICAL | | EN02-001 |
| AIR INTAKE SYSTEM | | EN03-001 |
| EXHAUST SYSTEM | | EN04-001 |
| LUBRICATING SYSTEM | | EN05-001 |
| COOLING SYSTEM | | EN06-001 |
| FUEL SYSTEM | | EN07-001 |
| TURBOCHARGER | | EN08-001 |
| EMISSION CONTROL | | EN10-001 |
| ALTERNATOR | | EN11-001 |
| STARTER | | EN12-001 |
| AIR COMPRESSOR | | EN13-001 |
| ENGINE CONTROL | | EN16-001 |

HINO

# WORKSHOP MANUAL

INDEX: ENGINE GROUP 1/2


GENERAL INTRODUCTION

ENGINE INTRODUCTION

ENGINE MECHANICAL

AIR INTAKE SYSTEM

EXHAUST SYSTEM

LUBRICATING SYSTEM

COOLING SYSTEM

FUEL SYSTEM

TURBOCHARGER

FUEL INJECTION PUMP

EMISSION CONTROL

ALTERNATOR

STARTER

AIR COMPRESSOR

ENGINE PTO
(POWER TAKE-OFF)

ENGINE RETARDER

ENGINE CONTROL

INDEX: ENGINE GROUP 2/2


| | |
|---|---|
| VEHICLE CONTROL | |
| FUEL CONTROL | |
| BRAKE CONTROL | |
| SUSPENSION CONTROL | |
| CAB EQUIPMENT CONTROL | |
| OTHERS | |

# GENERAL INTRODUCTION (ENGINE)

GN01-001

**GENERAL INTRODUCTION (ENGINE) ...GN01-2**

GENERAL PRECAUTIONS ..... GN01-2
HOW TO USE THIS WORKSHOP MANUAL... GN01-5
IDENTIFICATION INFORMATION ..... GN01-7
PRECAUTIONS ..... GN01-8
SPECIFIED TORQUE FOR STANDARD BOLTS AND NUTS ..... GN01-11
DISMOUNTING AND MOUNTING ..... GN01-12
SYMPTOM SIMULATION ..... GN01-15
GLOSSARY OF SAE AND HINO TERMS ..... GN01-17

# GENERAL INTRODUCTION (ENGINE)

## GENERAL PRECAUTIONS

EN00Z08010100001

Some recommended and standard maintenance services for your engine are included in this section. When performing maintenance on your engine, be careful not to get injured by using improper work procedures. Improper or incomplete work can cause a malfunction of the engine, which may result in personal injury and/or property damage. If you have any questions about performing maintenance, please consult your Hino dealer.

**WARNING**

**When working on your engine, observe the following general precautions to prevent death, personal injury and/or property damage, in addition to the particular DANGERS, WARNINGS, CAUTIONS and NOTICE in each chapter.**

- **Always wear safety glasses or goggles to protect your eyes.**
- **Remove rings, watches, ties, loose hanging jewelry and loose clothing before starting work on the vehicle.**
- **Bind long hair securely behind the head.**
- **When working on the vehicle, apply the parking brake firmly, place the gear shift lever in "Neutral" or "N" and block the wheels.**
- **Always stop the engine and turn off the starter switch, unless the operation requires the engine running. Removing the key from the switch is recommended.**
- **To avoid serious burns, keep yourself away from hot metal parts such as the engine, exhaust manifold, radiator, muffler, exhaust pipe and tail pipe.**
- **Do not smoke while working on the vehicle, since fuel and gas from battery are flammable.**
- **Take utmost care when working on the battery. It contains corrosive sulfuric acid.**
- **Large electric current flows through the battery cable and starter cable. Be careful not to cause a short, which can result in personal injury and/or property damage.**
- **Read carefully and observe the instructions placed on the jack before using it.**
- **Use safety stands to support the vehicle whenever you need to work under it. It is dangerous to work under a vehicle supported only by a jack.**
- **If it is necessary to run the engine after the hood is raised (tilted), make sure that the parking brake is firmly applied, the wheels are blocked, and the gear shift lever is positioned in "Neutral" before staring the engine.**
- **Run the engine only in a well-ventilated area to avoid inhaling of carbon monoxide.**
- **Keep yourself, your clothing and your tools away from moving parts such as the cooling fan and V-belt when the engine is running.**
- **Be careful not to damage lines and hoses by stepping or holding on them.**
- **Be careful not to leave any tool in the engine compartment. Tools may be hit by moving parts, which can cause personal injury.**

### DEFINITION OF SAFETY TERMS

| | |
|---|---|
| ⚠ DANGER | **Indicates an extremely hazardous situation if proper procedures are not followed and could result in death or serious injury.** |
| ⚠ WARNING | **Indicates a potential hazardous situation if proper procedures are not followed and could result in death or serious injury.** |
| ⚠ CAUTION | **Indicates a hazardous situation if proper procedures are not followed and could result in serious injury or damage to parts/equipment.** |
| NOTICE | **Indicates the need to follow proper procedures and to pay attention to precautions so that efficient service is provided.** |
| HINT | **Provides additional information to help you to perform the repair efficiently.** |

## TOWING

- When being towed, always place the gear shift lever in "Neutral" and release the parking brake completely. In order to protect the bumper, fit a protection bar against the lower edge of the bumper and put a wood block under the frame near the No. 1 crossmember when attaching the towing chain. Never lift or tow the vehicle if the chain is in direct contact with the bumper.

**1. Towing procedures**

(1) Make sure that the propeller shaft of the vehicle to be towed is removed. When the differential gear or rear axle shaft is defective, remove both right and left rear axle shafts, then cover the hub opening to prevent loss of axle lubricant and entry of dirt or foreign matter.
(2) Use a heavy duty cable or rope when towing the vehicle. Fasten the cable securely to the towing hook on the frame. The hook should be used only if the towed vehicle is not loaded.
(3) The angle of pulling direction of the cable fastened to the towing hook must not exceed 15° in horizontal and vertical directions from the straight ahead, level direction. Avoid using the hook in a way that subjects it to jerk, as in towing a vehicle trapped in a gutter.
(4) Keep the gear shift lever in "Neutral".
(5) Make sure that the starter switch is kept in the "ON" position.
(6) Make sure that the engine of the towed vehicle is kept running. If the engine is off, no compressed air/ no vacuum will be available for the brake. This is dangerous, as the brake system does not function if the engine is not running.
In addition, the power steering system will not function. The steering wheel, therefore, will become unusually hard to turn, making it impossible to control the vehicle.
(7) Note that the engine brake and exhaust brake cannot be applied, if the propeller shaft is removed.
(8) Make a slow start to minimize shock. Towing speed should be less than 30 km/h {18 mile/h}.

**2. If the engine of the towed vehicle is defective, make sure that the vehicle is towed only by a tow truck designed for that purpose.**

(1) Front end towing (with front wheels raised off the ground)
When towing from the front end with the front wheels raised off the ground, remove the rear axle shafts to protect the transmission and differential gears from being damaged. The hub openings should be covered to prevent the loss of axle lubricant or the entry of dirt or foreign matter.
The above-mentioned precautions should be observed for vehicles equipped with either automatic or manual transmission, and for even short distance towing. After being towed, check and refill the rear axle housing with lubricant if necessary.
(2) Rear end towing
When being towed with the rear wheels raised off the ground, fasten and secure the steering wheel in a straight ahead position.

## CLEAN AIR ACT

**1. Heavy-duty engine rebuilding practices.**
**§ 86.004-40**

- The provisions of this section are applicable to heavy-duty engines subject to model year 2004 or later standards and are applicable to the process of engine rebuilding (or rebuilding a portion of an engine or engine system). The process of engine rebuilding generally includes disassembly, replacement of multiple parts due to wear, and reassembly, and also may include the removal of the engine from the vehicle and other acts associated with rebuilding an engine. Any deviation from the provisions contained in this section is a prohibited act under section 203(a) (3) of the Clean Air Act (42 U.S.C. 7522(a) (3)).

(1) When rebuilding an engine, portions of an engine, or an engine system, there must be a reasonable technical basis for knowing that the resultant engine is equivalent, from an emissions standpoint, to a certified configuration (i.e., tolerances, calibrations, specifications) and the model year(s) of the resulting engine configuration must be identified. A reasonable basis would exist if:
   a. Parts installed, whether the parts are new, used, or rebuilt, are such that a person familiar with the design and function of motor vehicle engines would reasonably believe that the parts perform the same function with respect to emissions control as the original parts; and
   b. Any parameter adjustment or design element change is made only:
      • In accordance with the original engine manufacturer's instructions; or
      • Where data or other reasonable technical basis exists that such parameter adjustment or design element change, when performed on the engine or similar engines, is not expected to adversely affect in-use emissions.

(2) When an engine is being rebuilt and remains installed or is reinstalled in the same vehicle, it must be rebuilt to a configuration of the same or later model year as the original engine. When an engine is being replaced, the replacement engine must be an engine of (or rebuilt to) a configuration of the same or later model year as the original engine.

(3) At time of rebuild, emissions-related codes or signals from on-board monitoring systems may not be erased or reset without diagnosing and responding appropriately to the diagnostic codes, regardless of whether the systems are installed to satisfy requirements in § 86.004-25 or for other reasons and regardless of form or interface. Diagnostic systems must be free of all such codes when the rebuilt engine is returned to service. Such signals may not be rendered inoperative during the rebuilding process.

(4) When conducting a rebuild without removing the engine from the vehicle, or during the installation of a rebuilt engine, all critical emissions-related components listed in § 86.004-25(2) not otherwise addressed by paragraphs (1) through (3) of this section must be checked and cleaned, adjusted, repaired, or replaced as necessary, following manufacturer recommended practices.

(5) Records shall be kept by parties conducting activities included in paragraphs (1) through (4) of this section. The records shall include at minimum the mileage and/or hours at time of rebuild, a listing of work performed on the engine and emissions-related control components including a listing of parts and components used, engine parameter adjustments, emissions-related codes or signals responded to and reset, and work performed under paragraph (4) of this section.
   a. Parties may keep records in whatever format or system they choose as long as the records are understandable to an EPA enforcement officer or can be otherwise provided to an EPA enforcement officer in an understandable format when requested.
   b. Parties are not required to keep records of information that is not reasonably available through normal business practices including information on activities not conducted by themselves or information that they cannot reasonably access.
   c. Parties may keep records of their rebuilding practices for an engine family rather than on each individual engine rebuilt in cases where those rebuild practices are followed routinely.
   d. Records must be kept for a minimum of two years after the engine is rebuilt.

**2. Maintenance instructions.**
**§ 86.010-38**

(1) For each new diesel-fueled engine subject to the standards prescribed in § 86.007-11, as applicable, the manufacturer shall furnish or cause to be furnished to the ultimate purchaser a statement that
**"This engine must be operated only with ultra low-sulfur diesel fuel (meeting EPA specifications for highway diesel fuel, including a 15 ppm sulfur cap)."**

# HOW TO USE THIS WORKSHOP MANUAL

EN00Z08010200001

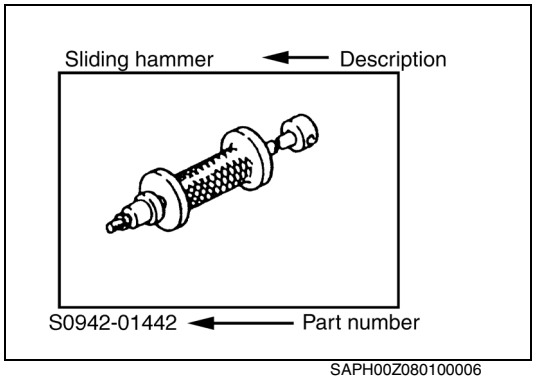


SAPH00Z080100006

This workshop manual is designed as a guide for servicing the vehicles.
An INDEX is provided on the first page of each chapter.

TROUBLESHOOTING is dealt with in each chapter.
When beginning operations, refer to the TROUBLESHOOTING section for a guide to appropriate diagnoses.

SPECIAL TOOLS are dealt with in each chapter.
When ordering a special tool, confirm the part number with the applicable parts catalog.

- **REPAIR PROCEDURES**
  Repair procedures when self-explanatory, such as simple installation and removal of parts, have been omitted. Illustrations, such as the one below, have been provided to make such simple procedures clear. Only essential procedures requiring specific directions have been dealt with explicitly.

## TIMING GEAR AND CAMSHAFT

EXAMPLE:

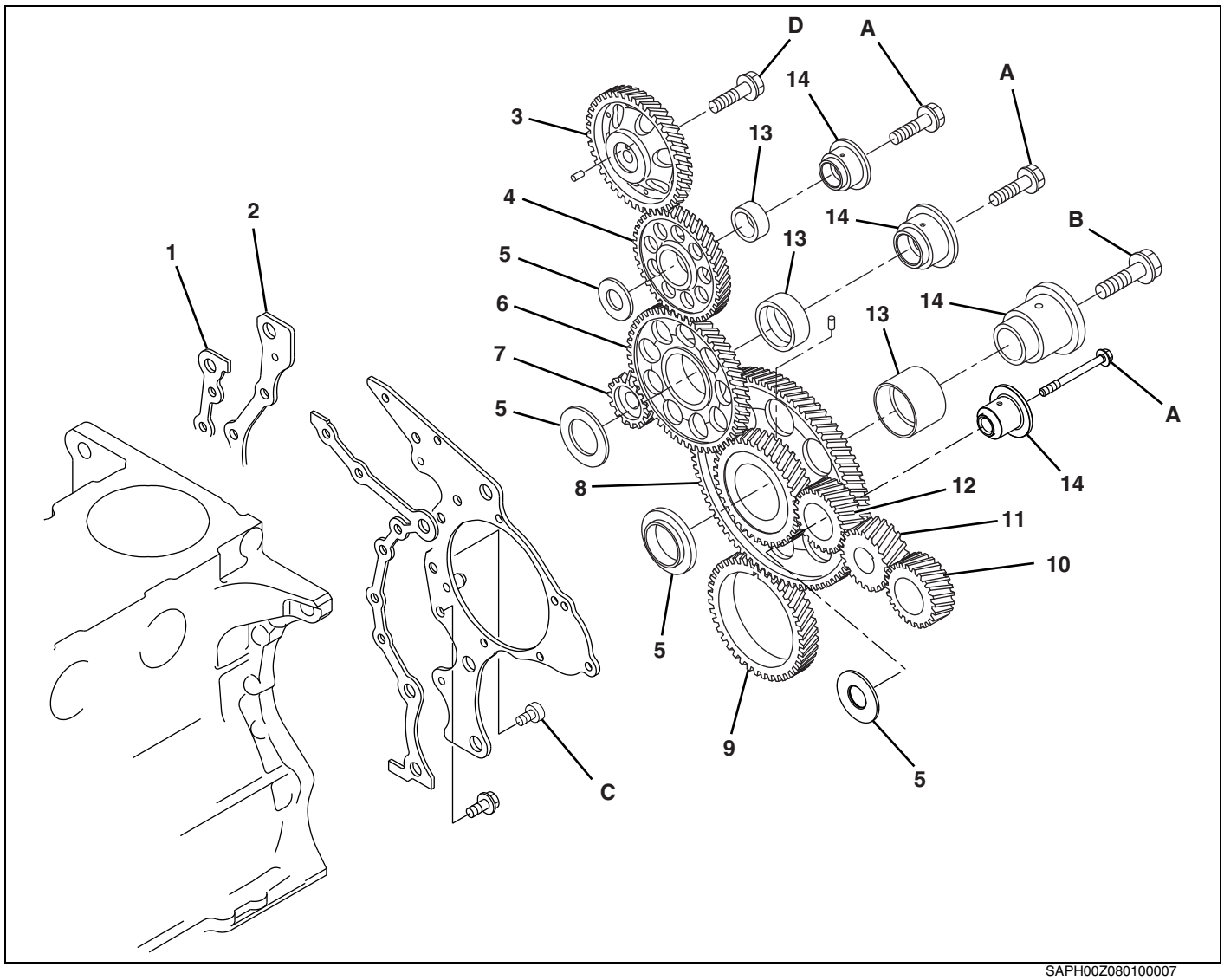


SAPH00Z080100007

| | | | |
|---|---|---|---|
| 1 | Gasket | 8 | Main idle gear |
| 2 | Rear end plate | 9 | Crankshaft gear |
| 3 | Camshaft gear | 10 | Power steering pump drive gear |
| 4 | Cam idle gear | 11 | Air compressor drive gear |
| 5 | Idle gear thrust plate | 12 | Air compressor idle gear |
| 6 | Sub-idle gear | 13 | Idle drive bushing |
| 7 | Oil pump gear | 14 | Idle gear shaft |

**Tightening torque** **Unit: N·m {kgf·cm, lbf·ft}**

| | | | |
|---|---|---|---|
| A | 108 {1,100, 80}# | C | 55 {560, 41} Application of lock sealant |
| B | 172 {1,750, 127}# | D | 59 {600, 43}+90°# |

**#=Apply oil to the threads and seat surfaces before tightening.**

In some cases, illustrations may be of parts which differ in some nonessential way from the parts found on your particular vehicle. In such cases, the principle or procedure being illustrated applies regardless of such nonessential differences.

- **DEFINITION OF TERMS**
  This engine rotates counterclockwise viewed from the flywheel side.

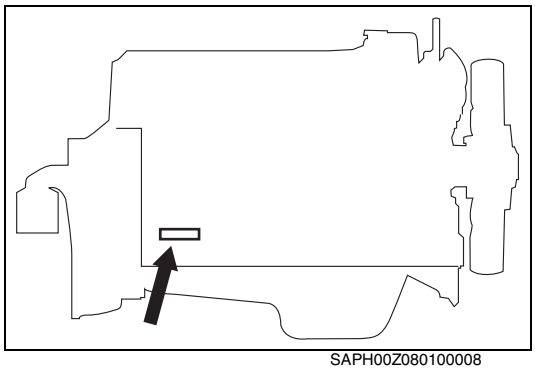
SAPH00Z080100008

# IDENTIFICATION INFORMATION

EN00Z08010200002

- ENGINE SERIAL NUMBERS.
  Please quote these numbers when ordering spare parts or reporting technical matter to receive prompt service attention.
  The engine serial number is engraved on the engine cylinder block.

# PRECAUTIONS

EN00Z0801C100001

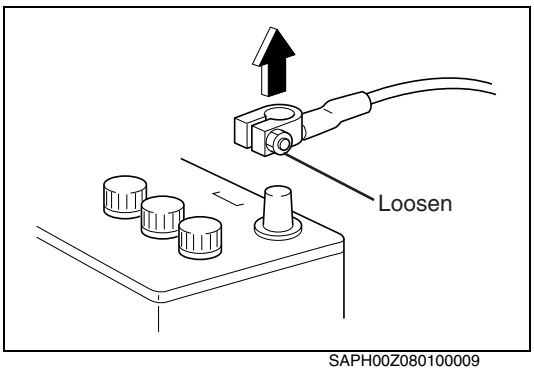

SAPH00Z080100009

## PRECAUTIONS FOR ELECTRICAL SYSTEM

### 1. REMOVING THE BATTERY CABLE

**⚠ WARNING**

- **Be sure to wait for at least ten minutes after the starter key is turned to "LOCK" position before you disconnect the battery terminals from the battery, as the vehicle data is recorded on ECU and DCU starts working for the exhaust gas after treatment after the starter key is turned to "LOCK" position. Otherwise, the vehicle data will not be recorded on ECU properly and DCU will not complete working properly, which may result in the malfunction of DPR system and DEF-SCR system.**
- **The MIL (malfunction indicator light) may come on when the starter key is turned to "ON" position again, even if you wait for at least ten minutes before disconnecting the battery terminals from the battery after the starter key is turned to "LOCK" position. In this case, use HINO DX II to clear the DTC (P204F and P068A), to turn off the MIL and to conduct DPR regeneration manually.**

(1) Before electrical system work, remove the cable from the minus terminal of the battery in order to avoid burning caused by short-circuiting.
(2) To remove the battery cable, fully release the nut to avoid damage to the battery terminal. Never twist the terminal.

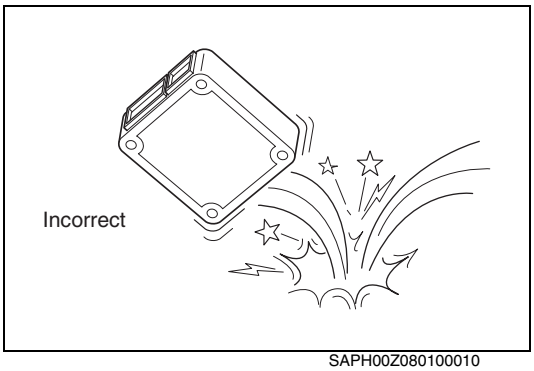

SAPH00Z080100010

### 2. HANDLING OF ELECTRONIC PARTS

(1) Never give an impact to electronic parts of a computer or relay.
(2) Keep electronic parts away from high temperatures and humidity.
(3) Never splash water onto electronic parts in washing the vehicle.
(4) Do not remove the harness connector, electric component box, and cover except for repair and inspection.
If removal is necessary, pay attention that water and foreign matters do not attach or enter to the connector, terminals, electric component box, and cover.
In restoration, make sure there is no attachment or entry of water and foreign matters and mount them properly, because it causes degradation of waterproof function.

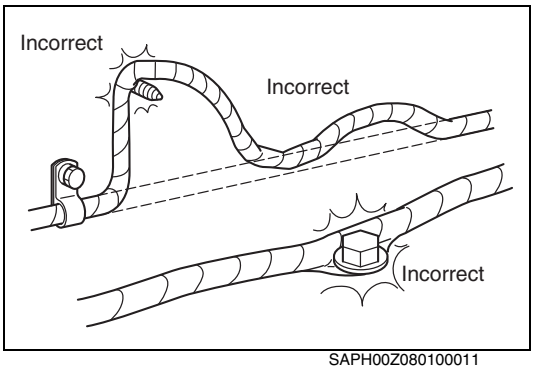

SAPH00Z080100011

### 3. HANDLING OF WIRE HARNESS

(1) Perform marking on a clamp and a clip and secure then in original position so that the wire harness will not interfere with the end and acute angle section of the body and a bolt.
(2) To attach a part, take care not to bite the wire harness.

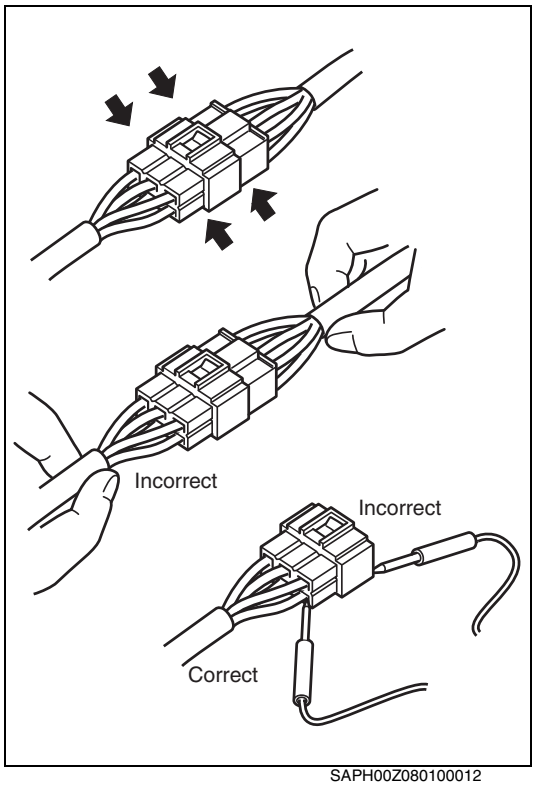

SAPH00Z080100012

**4. HANDLING OF CONNECTOR**

(1) To remove a connector, hold the connector (indicated by an arrow in the figure) to pull it out. Never pull the harness.
(2) To remove a connector with lock, release the lock then pull it out.
(3) To connect a connector with lock, insert it until it clicks.
(4) To insert a test lead into the connector, insert it from behind the connector.
(5) In case it is difficult to insert a test lead from behind the connector, prepare a harness for inspection and perform inspection.

**5. INSTALLATION OF BATTERY DISCONNECT SWITCH**

**⚠ WARNING**

- **Installation of the battery disconnect switch on the power supply circuit for the dosing control unit of DEF-SCR (DCU) may damage or result in the malfunction of DEF-SCR system.**
- **Be sure to read and follow the procedures and instructions on the service bulletin before the installation of the battery disconnect switch.**

**6. HANDLING OF BATTERY DISCONNECT SWITCH**

**⚠ WARNING**

- **Wait for at least one minute before using the battery disconnect switch after the starter key is turned to "LOCK" position. Otherwise, the vehicle data will not be recorded on ECU properly, which may result in the malfunction of DPR system.**

## PRECAUTIONS FOR ELECTRIC WELDING

**1. PRECAUTION FOR ELECTRIC WELDING**

**Electrical components such as the alternator and tachograph are directly connected to the battery and one end is earthed to the chassis frame. Under these conditions, welding current will flow back along the earth circuit if electric welding is carried out and damage may be caused to the alternator, tachograph, electrical components, etc. Consequently, the following precautions are always to be taken during welding.**

(1) Disconnect the earth terminal of the battery at the frame fitment and earth the welding equipment securely to the frame itself. (Do not fit the welding equipment earth to such things as the tire rims, brake pipes or fuel pipes and leaf spring, etc.)

a. Turn the starter switch off.
b. Disconnect the battery's negative terminal of the battery.
c. Earth welding equipment securely, near to the area to be welded.
d. Put back battery negative ground as original condition.
e. Finally check the functioning of all instruments.

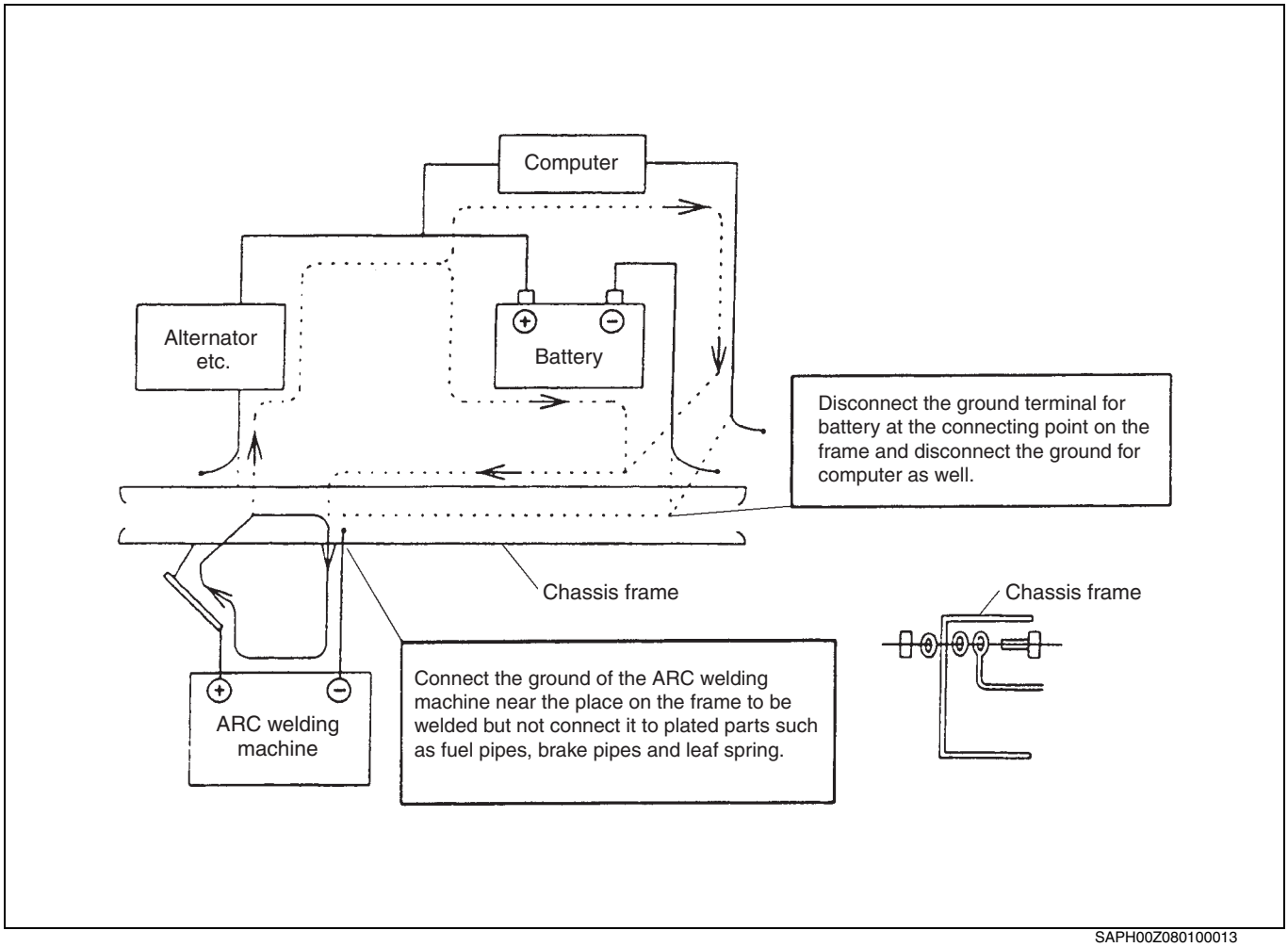


SAPH00Z080100013

(2) In order to prevent damage to ancillary equipment components from sparks during welding, take steps such as putting fire-resistant covers over things like the engine, meters, steering wheel, hoses, tubes, leaf spring and tires.

# SPECIFIED TORQUE FOR STANDARD BOLTS AND NUTS

EN00Z08013200001

**1. FLANGE BOLT** **Unit: N·m {kgf·cm, lbf·ft}**

| Class | 7T | 9T |
|---|---|---|
| Representation<br>Diameter x Pitch | 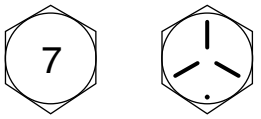 |  |
| M8 x 1.25 | 28.5 {290, 21.0} | 36 {370, 26.8} |
| M10 x 1.25 | 60 {610, 44.1} | 74.5 {760, 55.0} |
| M10 x 1.5 | 55 {560, 40.5} | 68.5 {700, 50.6} |
| M12 x 1.25 | 108 {1,100, 79.6} | 136 {1,390, 100.5} |
| M12 x 1.75 | 97 {990, 71.6} | 125 {1,280, 92.6} |
| M14 x 1.5 | 171.5 {1,750, 126.6} | 216 {2,210, 159.8} |
| M14 x 2 | 154 {1,570, 113.6} | 199 {2,030, 146.8} |

**2. BOLT WITH WASHER** **Unit: N·m {kgf·cm, lbf·ft}**

| Class | 4T | 7T | 9T |
|---|---|---|---|
| Representation<br>Diameter x Pitch | 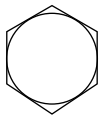 <br>No Mark | 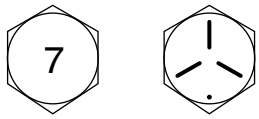 |  |
| M6 x 1 | 6 {60, 4.3} | 10 {100, 7.2} | 13 {130, 9.4} |
| M8 x 1.25 | 14 {140, 10.1} | 25 {250, 18.1} | 31 {320, 23.1} |
| M10 x 1.25 | 29 {300, 21.7} | 51 {520, 37.6} | 64 {650, 47.0} |
| M10 x 1.5 | 26 {270, 19.5} | 47 {480, 34.7} | 59 {600, 43.4} |
| M12 x 1.25 | 54 {550, 39.8} | 93 {950, 68.7} | 118 {1,200, 86.8} |
| M12 x 1.75 | 49 {500, 36.2} | 83 {850, 61.5} | 108 {1,100, 79.6} |
| M14 x 1.5 | 83 {850, 61.5} | 147 {1,500, 108.5} | 186 {1,900, 137.4} |
| M14 x 2 | 74 {750, 54.2} | 132 {1,350, 97.6} | 172 {1,750, 126.6} |

# DISMOUNTING AND MOUNTING

EN00Z08013200002

## PROCEDURE FOR INSTALLING JOINTS AND GASKETS OF ENGINE PIPING

**1. Gasket seal type (aluminum + rubber, asbestos or copper).**

| Location of gasket seal | | |
|---|---|---|
| 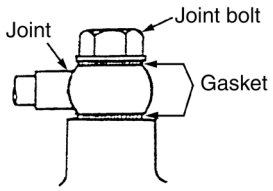 | 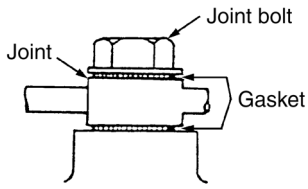 | 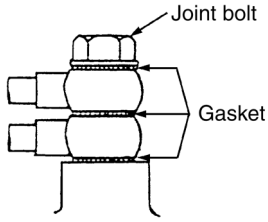 |
| 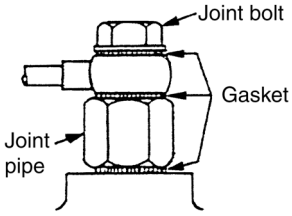 | 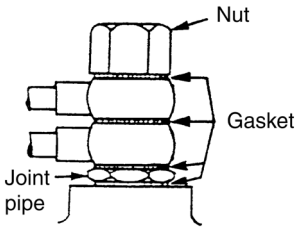 | |

**Tightening torque chart**

| Clamping screw size (Diameter) mm {in.} | Tightening torque N·m {kgf·cm, lbf·ft} |
|---|---|
| 8 {0.315} | 13 {130, 9} |
| 10 {0.394} | 20 {200, 14} |
| 12 {0.472} | 25 {250, 18} |
| 14 {0.551} | 25 {250, 18} |
| 16 {0.630} | 29 {300, 22} |
| 18 {0.709} | 39 {400, 29} |
| 20 {0.787} | *39 {400, 29} |
| 24 {0.945} | 69 {700, 51} |
| 28 {1.102} | 127 {1,300, 94} |

**2. Metal seal type (Flare connector type).**

| Location of metal seal | | |
|---|---|---|
| 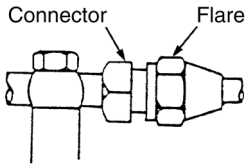 | 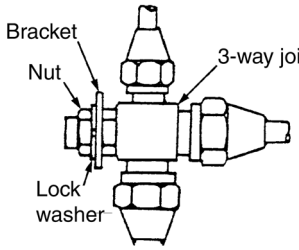 | 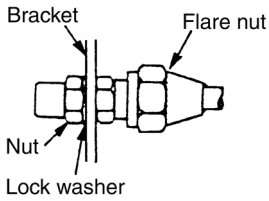 |

**Tightening torque chart**

| Clamping screw size (Diameter) mm {in.} | Tightening torque N·m {kgf·cm, lbf·ft} |
|---|---|
| 12 {0.472} | 20 {200, 14} |
| 14 {0.551} | 31 {320, 23} |
| 16 {0.630} | 39 {400, 29} |
| 18 {0.709} | 59 {600, 43} |
| 20 {0.787} | 64 {650, 47} |

**3. Metal seal type (Nipple connector type).**

| Location of metal seal | | |
|---|---|---|
| 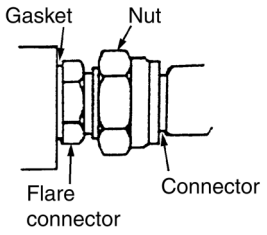 | 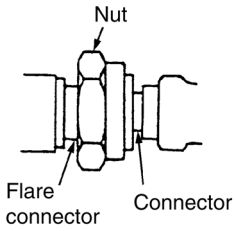 | |

**Tightening torque chart**

| Clamping screw size (Diameter) mm {in.} | Tightening torque N·m {kgf·cm, lbf·ft} |
|---|---|
| 10 {0.394} | 11 {110, 8} |
| 24 {0.945} | 20 {200, 14} |

**NOTICE**

- **Before installing the joints, ensure that there is no dirt or burrs adhering to the various seat faces (pipe joints, gasket, etc.)**
- **Because the pipes can move relatively freely during installation and the seat faces are liable to tilt, first temporarily tighten the pipes, then tighten them to the specified torque and ensure that there is no leakage from them.**
- **When tightening two pipes together, be very careful that they do not rotate together.**
- **After installing the pipes, apply the correct pressure to each pipe joint and ensure that there is no leakage.**
- **Ensure that the various tightening torques conform to the above table.**

***If a soft washer #4840 FR–N (aluminum + rubber and carbon press fit part) is loosened or removed subsequent to being installed, be sure and replace it with a new one.**
**There is no need to replace it, however, for normal retightening.**

# SYMPTOM SIMULATION

EN00Z08013200003

**HINT**

**The most difficult case in troubleshooting is when no problem symptoms occur. In such a case, a thorough problem analysis must be carried out. A simulation of the same or similar conditions and environment in which the problem occurred in the customer's vehicle should be carried out. No matter how much skill or experience a technician has, troubleshooting without confirming the problem symptoms will lead to important repairs being overlooked and mistakes or delays.**

**For example:**

**With a problem that only occurs when the engine is cold or as a result of vibration caused by the road during driving, the problem can never be determined if the symptoms are being checked on a stationary vehicle or a vehicle with a warmed-up engine. Vibration, heat or water penetration (moisture) is difficult to reproduce. The symptom simulation tests below are effective substitutes for the conditions and can be applied on a stationary vehicle. Important points in the symptom simulation test: In the symptom simulation test, the problem symptoms as well as the problem area or parts must be confirmed. First, narrow down the possible problem circuits according to the symptoms. Then, connect the tester and carry out the symptom simulation test, judging whether the circuit being tested is defective or normal. Also, confirm the problem symptoms at the same time. Refer to the problem symptoms table for each system to narrow down the possible causes.**

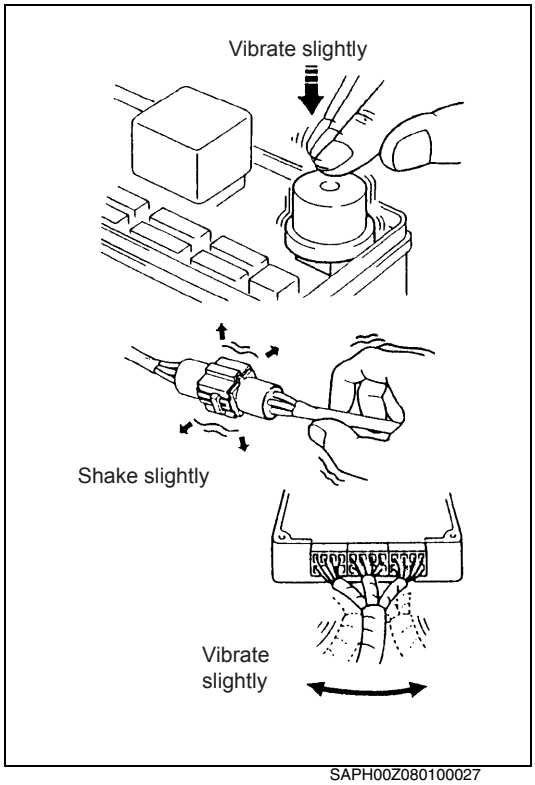


SAPH00Z080100027

**1. VIBRATION METHOD: When malfunction seems to occur as a result of vibration.**

(1) PART AND SENSOR
Apply slight vibration with a finger to the part of the sensor suspected to be the cause of the problem, and check whether or not the malfunction occurs.

**NOTICE**

**Applying strong vibration to relays may open relays**

(2) CONNECTORS
Slightly shake the connector vertically and horizontally.

(3) WIRE HARNESS
Slightly shake the wire harness vertically and horizontally.

**HINT**

**The connector joint and fulcrum of the vibration are the major areas that should be checked thoroughly.**

**2. HEAT METHOD: When a malfunction seems to occur when the area in question is heated.**

(1) Heat the component that is the possible cause of the malfunction with a hair dryer or similar device. Check if the malfunction occurs.

**NOTICE**

- **Do not heat to more than 60°C (140°F). Exceeding this temperature may damage components.**
- **Do not apply heat directly to the parts in the ECU.**

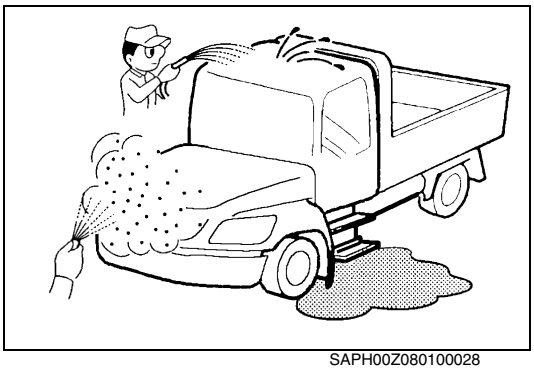

SAPH00Z080100028

**3. WATER SPRINKLING METHOD: When a malfunction seems to occur on a rainy day or in high-humidity.**

(1) Sprinkle water onto the vehicle and check if the malfunction occurs.

**NOTICE**

- **Never sprinkle water directly into the engine compartment. Indirectly change the temperature and humidity by spraying water onto the front of the radiator.**
- **Never apply water directly onto the electronic components.**

**HINT**

**If the vehicle has or had a water leakage problem, the leakage may have damaged the ECU or connections. Look for evidence of corrosion or short circuits. Proceed with caution during water tests.**

**4. HIGH ELECTRICAL LOAD METHOD: When a malfunction seems to occur when electrical load is excessive.**

(1) Turn on the heater blower, headlight, rear window defogger and all other electrical loads. Check if the malfunction reoccurs.

# GLOSSARY OF SAE AND HINO TERMS

EN00Z08010200003

This glossary lists all SAE-J2403 terms and abbreviations used in this manual in compliance with SAE recommendation, as well as their HINO equivalents.

| SAE ABBREVIATIONS | SAE TERMS | HINO TERMS ( )--ABBREVIATIONS |
|---|---|---|
| AAT | AMBIENT AIR TEMPERATURE | Ambient Air Temperature |
| ACL | AIR CLEANER | Air cleaner |
| ACL Element | ACL (Air Cleaner) Element | Air Cleaner element |
| ACL Element | AIR CLEANER Element | Air Cleaner element |
| ACL Housing | AIR CLEANER Housing | Air cleaner body assembly |
| ACL Housing Cover | AIR CLEANER Housing Cover | Air Cleaner Housing Cover |
| AFTDEF | AFTERTREATMENT DIESEL EXHAUST FLUID | DEF |
| AFTDEFDU | AFTERTREATMENT DIESEL EXHAUST FLUID DOSING UNIT | DCU |
| AFTDOC | AFTERTREATMENT DIESEL OXIDATION CATALYST | DOC (Diesel Oxidation Catalyst) |
| AFTDOS | AFTERTREATMENT DOSER AFTDOS | Dosing |
| AFTDPF | AFTERTREATMENT DIESEL PARTICULATE FILTER | DPR filter |
| AFTDPFDP | Aftertreatment Diesel Particulate Filter Differential Pressure | DPR differential pressure |
| AFTEGT | AFTERTREATMENT EXHAUST GAS TEMPERATURE | Exhaust gas temperature |
| AP | ACCELERATOR PEDAL | Accelerator pedal |
| AP Sensor | ACCELERATOR PEDAL Sensor | Accelerator Pedal Position Sensor |
| APP | ACCELERATOR PEDAL POSITION | Accelerator Pedal Position |
| CAC | CHARGE AIR COOLER | Intercooler |
| CPP Switch | CLUTCH PEDAL POSITION Switch | Clutch Switch |
| DCC | DIAGNOSTIC CONNECTOR, Cab | Diagnosis connector |
| DCU | DIAGNOSTIC CONNECTOR, Underhood | Diagnosis connector |
| DRIVER | DRIVER | Driver |
| DTC | DIAGNOSTIC TROUBLE CODE | Diagnosis Trouble Code |
| DTM Switch | DIAGNOSTIC TEST MODE Switch | Diagnosis switch |
| EBP | EXHAUST BACK PRESSURE | Back pressure |
| EBP | EXHAUST BACK PRESSURE | Exhaust back pressure |
| EBP Sensor | EXHAUST BACK PRESSURE Sensor | Back pressure sensor |
| EBPR Valve | EXHAUST BACK PRESSURE REGULATOR Valve | Exhaust control valve |

| SAE ABBREVIATIONS | SAE TERMS | HINO TERMS ( )--ABBREVIATIONS |
|---|---|---|
| EC | ENGINE CONTROL | Engine control |
| ECT | ENGINE COOLANT TEMPERATURE | Coolant Temperature |
| ECT | ENGINE COOLANT TEMPERATURE | Water Temperature |
| EFT | ENGINE FUEL TEMPERATURE | Fuel temperature |
| EFT Sensor | ENGINE FUEL TEMPERATURE Sensor | Fuel temperature sensor |
| EGR | EXHAUST GAS RECIRCULATION | EGR |
| EGR Valve | EXHAUST GAS RECIRCULATION Valve | EGR valve |
| EGRT | EXHAUST GAS RECIRCULATION TEMPERATURE | EGR temperature |
| EGRT Sensor | EXHAUST GAS RECIRCULATION TEMPERATURE Sensor | EGR exit temperature sensor |
| EGT | EXHAUST GAS TEMPERATURE | Exhaust gas temperature |
| EI | ELECTRONIC IGNITION | Ignition coil |
| EOP | ENGINE OIL PRESSURE | Oil Pressure |
| EOT | ENGINE OIL TEMPERATURE | Oil Temperature |
| FP | FUEL PUMP | Fuel pump |
| FUEL PRESSURE Sensor | FUEL PRESSURE Sensor | Fuel Pressure sensor |
| GLOW PLUG | GLOW PLUG | Glow plug |
| GND | GROUND | GROUND |
| IA | INTAKE AIR | Air Intake |
| IA System | INTAKE AIR System | Air Intake System |
| IAT | INTAKE AIR TEMPERATURE | Intake temperature |
| IAT Sensor | INTAKE AIR TEMPERATURE Sensor | Intake temperature sensor |
| IDLE | IDLE | idle |
| IMAT | INTAKE MANIFOLD AIR TEMPERATURE | Intake manifold Air temperature sensor |
| IMAT | INTAKE MANIFOLD TEMPERATURE | Intake manifold temperature sensor |
| INJ | INJECTOR | Injector |
| MAF Sensor | MASS AIR FLOW Sensor | Air flow sensor |
| MIL | MALFUNCTION INDICATOR LIGHT | Check engine |
| OSS Sensor | OUTPUT SHAFT SPEED Sensor | Output Speed Sensor |
| OSS Sensor | OUTPUT SHAFT SPEED Sensor | Speed Sensor |
| PC Solenoid Valve | PRESSURE CONTROL Solenoid Valve | Solenoid control valves |
| PCV | POS CRANKCASE VENTILATION | PCV (Positive Crankcase Vent) |
| PCV Valve | POS CRANKCASE VENTILATION Valve | PCV (Positive Crankcase Vent) Valve |
| PCV Valve | POS CRANKCASE VENTILATION Valve | PCV Valve |

| SAE ABBREVIATIONS | SAE TERMS | HINO TERMS ( )--ABBREVIATIONS |
|---|---|---|
| PCV Valve | POSITIVE CRANKCASE VENT Valve | PCV Valve |
| PNP | PARK/NEUTRAL POSITION | Neutral position |
| PNP Switch | PARK/NEUTRAL POSITION Switch | Neutral switch |
| RFP | RAIL FUEL PRESSURE | Common rail Pressure |
| RFP Sensor | RAIL FUEL PRESSURE Sensor | Common rail pressure sensor |
| SPARK PLUG | SPARK PLUG | Spark plug |
| SRI | SERVICE REMINDER INDICATOR | Check engine |
| ST | SCAN TOOL | Diagnostic tool |
| TC | TURBOCHARGER | Turbocharger |
| TCC | TORQUE CONVERTER CLUTCH | Torque Converter |
| TP Sensor | THROTTLE POSITION Sensor | Throttle Sensor |
| TSS Sensor | TURBINE SHAFT SPEED Sensor | Turbine Speed Sensor |
| VAF Sensor | VOLUME AIR FLOW Sensor | Air flow sensor |
| VLS | VEHICLE LIMITING SPEED | Speed Limiter Upper Limit |
| VSS | VEHICLE SPEED SENSOR | Vehicle Speed sensor |

# ENGINE INTRODUCTION (J08E)

EN01-001

**ENGINE ASSEMBLY ..... EN01-2**
DATA AND SPECIFICATIONS ..... EN01-2
TROUBLESHOOTING ..... EN01-4
TROUBLESHOOTING
(COMMON RAIL SYSTEM) ..... EN01-11
ENGINE TUNEUP ..... EN01-12
SPECIAL TOOL ..... EN01-18
OVERHAUL CRITERIA ..... EN01-19
DISMOUNTING AND MOUNTING ..... EN01-20
LIQUID GASKET
AND APPLICATION POINTS ..... EN01-22

# ENGINE ASSEMBLY

## DATA AND SPECIFICATIONS

EN0160101I200001

| | | |
|---|---|---|
| **Model** | | **J08E-VB** |
| **Type** | | **Diesel, 4 cycle, vertical, 6 cylinder, in-line overhead camshaft, water-cooled, direct injection** |
| **Aspiration** | | **Turbocharged with intercooler** |
| **Bore and stroke** | | **112x130 mm {4.41x5.11 in.}** |
| **Piston displacement** | | **7.684 L {468.9 cu.in.}** |
| **Compression ratio** | | **17.5: 1** |
| **Firing order** | | **1-4-2-6-3-5 (The cylinder numbers are counted in order from the crankshaft pulley side)** |
| **Direction of rotation** | | **Counterclockwise viewed from flywheel** |
| **Compression pressure** | | **3.2-3.4 MPa {33-35 kgf/cm$^2$, 467-496 lbf/in.$^2$} at 150 r/min** |
| **Maximum revolution (at full load)** | | **2,600 r/min** |
| **Idling revolution** | | **750 r/min** |
| **Dry weight** | | **Approximately 645 kg {1,422 lb}** |
| **Valve seat angle** | **Intake** | **30°** |
| | **Exhaust** | **45°** |
| **Valve face angle** | **Intake** | **30°** |
| | **Exhaust** | **45°** |
| **Valve timing (flywheel travel)** | **Intake opens** | **14° before top dead center** |
| | **Intake closes** | **30° after bottom dead center** |
| | **Exhaust opens** | **54° before bottom dead center** |
| | **Exhaust closes** | **13° after top dead center** |
| **Valve clearance (when cold)** | **Intake** | **0.30 mm {0.0118 in.}** |
| | **Exhaust** | **0.45 mm {0.0177 in.}** |
| **Engine oil pump** | **Type** | **Full forced pressure feed by gear pump** |
| | **Drive** | **By gear** |
| **Engine oil cooler** | | **Multi-plate type, water cooled** |
| **Injector** | **Type** | **Multi-hole nozzle type** |
| **Coolant pump** | **Type** | **Forced circulation by volute pump** |
| | **Drive** | **By V-belt** |
| **Thermostat Type** | | **Wax.type, bottom bypass system** |
| **Injection timing (flywheel travel)** | | **0° before top dead center for No.1 cylinder of the compression stroke** |

| | | |
|---|---|---|
| **Model** | | **J08E-WU** |
| **Type** | | **Diesel, 4 cycle, vertical, 6 cylinder, in-line overhead camshaft, water-cooled, direct injection** |
| **Aspiration** | | **Turbocharged with intercooler** |
| **Bore and stroke** | | **112x130 mm {4.41x5.11 in.}** |
| **Piston displacement** | | **7.684 L {468.9 cu.in.}** |
| **Compression ratio** | | **17.5: 1** |
| **Firing order** | | **1-4-2-6-3-5 (The cylinder numbers are counted in order from the crankshaft pulley side)** |
| **Direction of rotation** | | **Counterclockwise viewed from flywheel** |
| **Compression pressure** | | **3.2-3.4 MPa {33-35 kgf/cm$^2$, 467-496 lbf/in.$^2$} at 150 r/min** |
| **Maximum revolution (at full load)** | | **2,600 r/min** |
| **Idling revolution** | | **750 r/min** |
| **Dry weight** | | **Approximately 640 kg {1,411 lb}** |
| **Valve seat angle** | **Intake** | **30°** |
| | **Exhaust** | **45°** |
| **Valve face angle** | **Intake** | **30°** |
| | **Exhaust** | **45°** |
| **Valve timing (flywheel travel)** | **Intake opens** | **14° before top dead center** |
| | **Intake closes** | **30° after bottom dead center** |
| | **Exhaust opens** | **54° before bottom dead center** |
| | **Exhaust closes** | **13° after top dead center** |
| **Valve clearance (when cold)** | **Intake** | **0.30 mm {0.0118 in.}** |
| | **Exhaust** | **0.45 mm {0.0177 in.}** |
| **Engine oil pump** | **Type** | **Full forced pressure feed by gear pump** |
| | **Drive** | **By gear** |
| **Engine oil cooler** | | **Multi-plate type, water cooled** |
| **Injector** | **Type** | **Multi-hole nozzle type** |
| **Coolant pump** | **Type** | **Forced circulation by volute pump** |
| | **Drive** | **By V-belt** |
| **Thermostat Type** | | **Wax.type, bottom bypass system** |
| **Injection timing (flywheel travel)** | | **0° before top dead center for No.1 cylinder of the compression stroke** |

# TROUBLESHOOTING

EN0160101F300001

## Engine overheating

| Symptom | Possible cause | Remedy/Prevention |
|---|---|---|
| **Engine overheating (Coolant)** | Insufficient coolant | Add coolant |
| | Defective thermostat | Replace thermostat |
| | Overflow of coolant due to leakage of exhaust into cooling system | Repair |
| | Damaged rubber hose | Replace rubber hose |
| | Coolant leakage due to deteriorated rubber hose | Replace rubber hose |
| | Coolant leakage from coolant pump | Replace the coolant pump |
| | Coolant leakage from rubber hose connection | Retighten or replace clamp |
| | Coolant leakage from cylinder head gasket | Replace gasket |
| **Engine overheating (Coolant pump)** | Bearing seizure | Replace |
| | Damaged (corroded) vane | Replace vane |
| **Engine overheating (Radiator)** | Clogged with rust or scale | Clean radiator |
| | Clogged with iron oxide due to leakage of exhaust into cooling system | Clean coolant passage and correct exhaust leakage |
| | Coolant leakage | Repair or replace radiator |
| | Damaged cooling fan | Replace cooling fan |
| | Clogged radiator core due to mud or other debris | Clean radiator |
| | Defective radiator cap pressure valve | Replace radiator cap |
| **Engine overheating (Abnormal combustion)** | Poor fuel | Use good quality fuel |
| | Breakdown of injector | Replace the injector |
| **Engine overheating (Other problems)** | Defective or deteriorated engine oil | Change engine oil |
| | Unsatisfactory operation of oil pump | Replace or repair |
| | Insufficient oil | Add oil |
| | Brake drag | Repair or adjust |
| | Break water temperature sensor | Replace it |
| **Engine overheating (Severe operating condition)** | Lugging the engine | Operate engine properly |

## Excessive oil consumption

| Symptom | Possible cause | Remedy/Prevention |
|---|---|---|
| **Excessive oil consumption (Pistons, cylinder liners, and piston rings)** | Wear of piston ring and cylinder liner | Replace piston rings and cylinder liner |
| | Worn, sticking or broken piston rings | Replace piston rings and cylinder liner |
| | Insufficient tension on piston rings | Replace piston rings and cylinder liner |
| | Unsatisfactory breaking in of piston rings | Replace piston rings and cylinder liner |
| | Unsuitable oil (viscosity too low) | Change oil as required and replace piston rings and cylinder liners |
| | Incorrectly fitted piston rings (upside down) | Replace piston rings |
| | Gaps of piston rings in cell with each other | Reassemble piston rings |
| **Excessive oil consumption (Valve and valve guides)** | Worn valve stem | Replace valve and valve guide |
| | Worn valve guide | Replace valve guide |
| | Incorrectly fitted valve stem seal | Replace the stem seal |
| | Excessive lubricant on rocker arm | Check clearance of rocker arm and shaft |
| **Excessive oil consumption (Excess oil feed)** | Defective oil level gauge | Replace oil level gauge |
| | Oil level too high | Drain excess oil |
| **Excessive oil consumption (Oil leakage from miscellaneous parts)** | Oil leakage from oil seal | Replace oil seal |
| | Cracks or blowhole in cylinder block | Replace cylinder block |
| | Oil leakage from connections of oil lines | Tighten connections of oil lines |
| | Oil leakage from oil cooler | Replace oil cooler |
| | Oil leakage from oil pan gasket | Replace oil pan gasket |
| | Oil leakage from O-ring | Replace O-ring |
| **Excessive oil consumption (Other problems)** | Overcooled engine (low temperature wear) | Warm up engine before moving vehicle. Check cooling system. |

**NOTICE**

**If oil consumption is excessive, the problems above will occur. Complaints from the customer are often related to such problems.**

1. **White smoke is emitted continuously when the engine is run at high speed.**
2. **White smoke is emitted only immediately after the engine speed is abruptly raised when idling.**
3. **The tail pipe is blackened with oil.**
4. **Oil leaks from the flanges of the exhaust manifold.**
5. **Lack of power.**

## Piston seizure

| Symptom | Possible cause | Remedy/Prevention |
|---|---|---|
| **Piston seizure (Pistons, cylinder liners and piston rings)** | Incorrect clearance between piston and cylinder liner | Replace piston, piston rings and cylinder liner |
| | Unsatisfactory installation of piston pin | Replace piston, piston rings, cylinder liner and piston pin as required |
| | Broken piston ring | Replace piston, piston rings and cylinder liner |
| | Difference in expansion due to use of wrong piston | Replace piston, piston rings and cylinder liner |
| **Piston seizure (Coolant)** | Reduction in capacity of coolant pump (due to vane corrosion) | Replace the coolant pump |
| | Leakage of coolant | Repair |
| | Insufficient coolant | Add coolant |
| | Dirty coolant | Clean and replace coolant |
| | Defective radiator (coolant leakage, clogging) | Repair or replace the radiator |
| | Defective rubber hose (leakage) | Replace rubber hose |
| | Defective thermostat | Replace the thermostat |
| | Leakage of exhaust into cooling system | Repair |
| **Piston seizure (Operation)** | Abrupt stoppage of engine after running at high speed | Operate engine properly |
| | Hill climbing using unsuitable gear | Select suitable gear |
| **Piston seizure (Oil)** | Insufficient oil | Add oil |
| | Dirty oil | Change oil |
| | Poor quality oil | Replace with proper engine oil |
| | High oil temperature | Repair |
| | Low oil pressure | Repair |
| | Defective oil pump | Repair oil pump |
| | Reduced performance due to worn oil pump | Replace oil pump |
| | Suction strainer sucking air | Add oil and/or repair strainer |
| **Piston seizure (Abnormal combustion)** | Use of defective fuel | Change fuel |
| | Engine overheating | See Symptom: **"Engine overheating"** |
| | Breakdown of injector | Replace the injector |

**NOTICE**
**If piston seizure occurs, the problems above will occur. Complaints from the customer are often related to these problems.**

1. **White smoke is emitted.**
2. **Lack of power**

## Lack of power

| Symptom | Possible cause | Remedy/Prevention |
|---|---|---|
| **Lack of power (Supply pump)** | Damaged suction control valve (SCV) | Replace the suction control valve (SCV) |
| | Use of poor fuel | Use good quality fuel |
| **Lack of power (Intake)** | Clogged air cleaner | Clean element or replace element |
| **Lack of power (Overheating)** | | See Symptom: **"Engine overheating"** |
| **Lack of power (Fuel and injector)** | Air in fuel system | Repair and bleed air from fuel system |
| | Clogged fuel filter | Replace element |
| | Use of poor fuel | Use good quality fuel |
| | Breakdown of injector | Replace the injector |
| **Lack of power (Pistons, cylinder liners and piston rings)** | Seized or wear of piston | Replace the piston, piston rings and liner |
| | Worn or broken piston rings, piston and cylinder liner | Replace piston rings, piston and liner |
| **Lack of power (Other problems)** | Exhaust brake butterfly valve stuck in half-open position | Replace or repair exhaust brake |
| | Connecting rod bent | Replace or repair connecting rod |
| | Exhaust pipe or muffler crushed (increased back-pressure) | Replace exhaust pipe or muffler |
| | Breakage of turbine or blower | Replace turbocharger |

## Leakage of exhaust

| Symptom | Possible cause | Remedy/Prevention |
|---|---|---|
| **Leakage of exhaust (Head gasket)** | Fatigued gasket (aging) | Replace gasket |
| | Damage | Replace gasket |
| | Improper installation | Replace gasket |
| **Leakage of exhaust (Head bolts)** | Loose bolts | Tighten bolts |
| | Elongated bolts | Replace bolts |
| | Improper tightening torque or tightening sequence | Tighten properly |
| **Leakage of exhaust (Cylinder block)** | Cracking | Replace cylinder block |
| | Surface distortion | Repair or replace |
| | Fretting of cylinder liner insertion portion (insufficient projection of cylinder liner) | Replace cylinder block |
| **Leakage of exhaust (Cylinder head)** | Cracking | Replace cylinder head |
| | Surface distortion | Repair or replace |
| **Leakage of exhaust (Cylinder liners)** | Cracking | Replace cylinder liner |
| | Corrosion | Replace cylinder liner |
| | Insufficient projection of cylinder liner | Replace cylinder liner |

**NOTICE**

**If leakage of the exhaust occurs, the problems above will occur. Complaints from the customer are often related to these problems.**

1. **Lack of power.**
2. **The engine overheats.**
3. **The coolant is discolored.**

## Difficulty starting engine

| Symptom | Possible cause | Remedy/Prevention |
|---|---|---|
| **Difficulty starting engine (Electrical system)** | Discharged battery | Charge battery |
| | Defective wiring in starter circuit | Repair wiring of starter |
| | Loose or open-circuit battery cable | Tighten battery terminal connections or replace battery cable |
| | Broken glow plug | Replace |
| **Difficulty starting engine (Supply pump)** | Defective supply pump | Replace the supply pump |
| | Use of poor fuel | Use good quality fuel |
| **Difficulty starting engine (Air cleaner)** | Clogged element | Replace the element |
| **Difficulty starting engine (Fuel system)** | No fuel in tank | Supply fuel |
| | Clogged fuel line | Clean fuel line |
| | Air sucked into fuel system through fuel line connections | Tighten fuel line connections |
| | Clogged fuel filter | Replace element |
| | Loose connection in high-pressure line | Tighten sleeve nut of high-pressure line |
| | Water in fuel | Drain and clean fuel system |
| **Difficulty starting engine (Oil system)** | Oil viscosity too high | Use proper viscosity oil, or install an oil immersion heater and warm up oil |
| **Difficulty starting engine (Other problems)** | Seized piston | Replace piston, piston rings, and liner |
| | Seized bearing | Replace bearing and/or crankshaft |
| | Reduced compression pressure | Overhaul engine |
| | Ring gear damaged or worn | Replace the ring gear and/or starter pinion |
| | Improperly adjusted or broken | Adjust |

## Rough idling

| Symptom | Possible cause | Remedy/Prevention |
|---|---|---|
| **Rough idling (Supply pump)** | Damaged suction control valve (SCV) | Replace the suction control valve (SCV) |
| | Use of poor fuel | Use good quality fuel |
| **Rough idling (Injector)** | Breakdown of injector | Replace the injector |
| | Use of poor fuel | Use good quality fuel |
| **Rough idling (Engine proper)** | Improper valve clearance | Adjust valve clearance |
| | Improper contact of valve seat | Replace or repair valve and valve seat |
| | Idling speed too low | Adjust idling speed |
| | Coolant temperature too low | Warm up engine |
| | Compression pressure of cylinders markedly different from one another | Overhaul engine |
| **Rough idling (Other problems)** | Clogged high pressure injection line | Replace line |
| | Leakage due to improper tightening of high pressure fuel line | Tighten sleeve nut |
| | Engine seizure | Replace pistons, piston rings and liners |
| | Incorrect valve timing | Replace camshaft |

## Diesel knock

| Symptom | Possible cause | Remedy/Prevention |
|---|---|---|
| **Diesel knock (Supply pump)** | Damaged suction control valve (SCV) | Replace the suction control valve (SCV) |
| | Use of poor fuel | Use good quality fuel |
| **Diesel knock (Injector)** | Breakdown of injector | Replace the injector |
| | Use of poor fuel | Use good quality fuel |
| **Diesel knock (Fuel system)** | Use of poor fuel | Use good quality fuel |
| **Diesel knock (Other problems)** | Excessively cooled or heated engine | Warm up or cool engine |
| | Insufficient air intake | Correct |
| | Insufficient compression pressure | Repair |
| | Compression pressure leaks at cylinder head gasket | Replace head gasket |
| | Improper valve clearance or valve sticking | Adjust or repair |
| | Tappet sticking | Replace tappet and camshaft |

## Unusual engine noise

| Symptom | Possible cause | Remedy/Prevention |
|---|---|---|
| **Unusual engine noise (Piston)** | Wear of piston pin boss or piston pin | Replace piston and/or piston pin |
| | Seized, damaged, or worn piston pin bushing | Replace piston pin bushing |
| | Worn pistons or cylinder liners | Replace piston or cylinder liner |
| | Damaged or seized piston | Replace piston and cylinder liner |
| | Foreign matter on top surface of the piston | Remove foreign matter and repair or replace piston, cylinder liner, and/or cylinder head |
| **Unusual engine noise (Valve mechanism)** | Incorrect valve clearance | Adjust valve clearance |
| | Valve cotter out of place | Replace valve cotter |
| | Seized valve stem | Replace valve and valve guide |
| | Broken valve | Replace valve |
| | Damaged rocker arm support | Replace rocker arm support |
| | Broken valve spring | Replace valve spring |
| **Unusual engine noise (Bearings seizure)** | Insufficient lubricating oil | Add oil |
| | Excessive or insufficient tightening of bearing housings | Retighten to specified torque |
| | Pits and scratches on bearing surface | Replace bearing and crankshaft |
| | Oil film formed on back of bearing | Replace bearing |
| | Improper installation of bearing | Replace bearing |
| | Reduction of spread dimension of bearing | Replace bearing |
| | Distorted bearing housing | Replace or correct bearing housing |
| | Excessive oil clearance | Replace bearing |

| Symptom | Possible cause | Remedy/Prevention |
|---|---|---|
| **Unusual engine noise (Various other parts)** | Exhaust gas leakage from exhaust pipe joints | Retighten joints |
| | Loosen or missing intake manifold flange gasket | Retighten or replace |
| | Intake valve seating is not concentric | Replace or correct the valve and valve seat |
| | Intake gas leakage | Retighten |
| **Unusual engine noise (Other problems)** | Loose cooling fan mounting bolts or fan pulley nut | Tighten the fan and crankshaft pulley |
| | Lack of lubricating oil (coolant pump, valves, etc.) | Lubricate |
| | Worn timing gear | Replace the timing gear |
| | Breakage of turbine or blower | Replace turbocharger |

**NOTICE**
**The items on this page concern unusual engine noise which is due to causes other than those given for diesel knock.**

# TROUBLESHOOTING (COMMON RAIL SYSTEM)

EN0160101F300002

## Engine does not start

| Symptom | Possible cause | Remedy/Prevention |
|---|---|---|
| **Engine does not start (Fuel not reaching supply pump)** | Fuel lines clogged or damaged | Clean or replace fuel lines |
| | Fuel filter clogged | Clean or replace the filter element |
| | Air in fuel caused by improper connections of fuel line between fuel tank and feed pump | Repair connections |
| | Filter incorporated in inlet side of feed pump clogged | Remove foreign material |
| | Breakdown feed pump | Replace the supply pump |
| **Engine does not start (Fuel reaching supply pump)** | Leakage due to improper tightening of high pressure fuel line | Tighten sleeve nut |
| | Breakdown ECU | Replace the ECU |
| **Engine does not start (Injector faulty)** | Injector broken | Replace the injector |
| **Engine does not start (Electrical system)** | Defective sensors or circuits | Refer to the chapter **TROUBLE SHOOTING (S7-UNAE14* or S7-CNAE14*)**. |
| **Engine starts and stops** | Fuel lines clogged | Clean or replace fuel lines |
| | Air in fuel caused by damaged fuel lines or improper connection of fuel lines | Repair fuel lines or replace fuel lines and gaskets |
| **Engine has low power (Injector faulty)** | Injector broken | Replace the injector |
| **Engine has low power (Electrical system)** | Defective sensors or circuits | Refer to the chapter **TROUBLE SHOOTING (S7-UNAE14* or S7-CNAE14*)**. |

## Excessive smoke

| Symptom | Possible cause | Remedy/Prevention |
|---|---|---|
| **Excessive smoke (Black smoke)** | Defective sensors or circuits | Refer to the chapter **TROUBLE SHOOTING (S7-UNAE14* or S7-CNAE14*)**. |
| | Defective injector | Replace the injector |
| **Excessive smoke (White smoke)** | Water in fuel | Check and clean fuel lines |
| | Glow plug not operating | Check glow plug circuit |

## Low idle speed irregular

| Symptom | Possible cause | Remedy/Prevention |
|---|---|---|
| **Low idle speed irregular** | Defective sensors or circuits | Refer to the chapter **TROUBLE SHOOTING (S7-UNAE14* or S7-CNAE14*)**. |
| | Defective injector | Replace the injector |

# ENGINE TUNEUP

EN0160101H300001

## VALVE CLEARANCE CHECKING AND ADJUSTING PROCEDURES

**NOTICE**

**Valve clearance adjustment is performed only when the checking result is not within the specified value.**

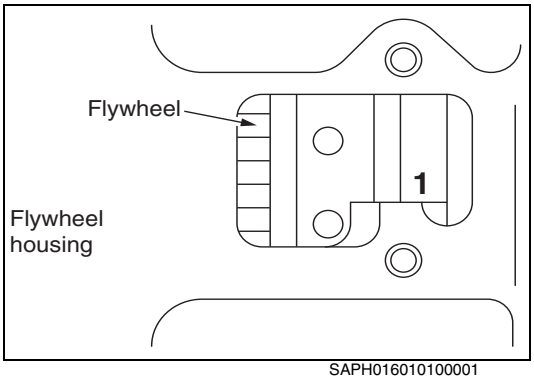


SAPH016010100001

### 1. PREPARATION OF CHECKING AND ADJUSTMENT

(1) Positioning the No.1 or No.6 piston at Top Dead Center of the compression stroke.

a. Turn the crankshaft counterclockwise (viewed from the flywheel side) to align mark "1/6" on the outer periphery of the flywheel with the pointer of the flywheel housing.

**NOTICE**

- **Always turn the crankshaft counterclockwise (viewed from the flywheel side).**
- **In this position the No.1 or No.6 piston is at the Top Dead Center of the compression stroke.**

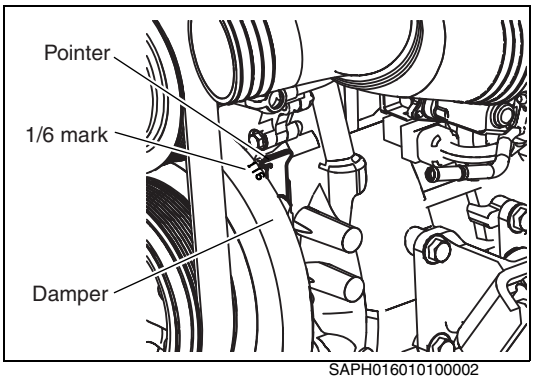


SAPH016010100002

b. Turn the crankshaft clockwise in the engine direction and align the damper timing mark "1/6" to the pointer.

**NOTICE**

**When matching the pulley mark "1/6" of the crankshaft pulley, attach the 3 pins on the special tool to any of the 6 corresponding holes on the crank pulley. Then turn the torque wrench in a clockwise direction.**

**SST: Cranking Tool (S0940-91200)**

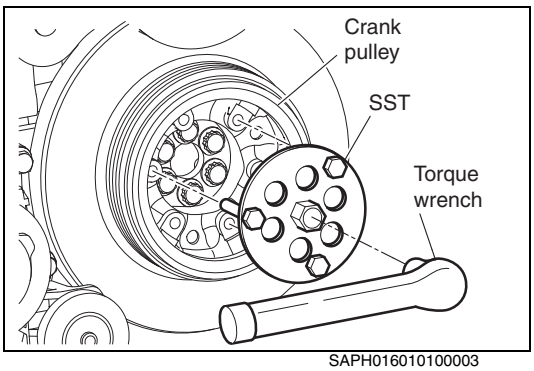


SAPH016010100003

(2) Among three drill holes on the camshaft gear, when two drill holes are on horizontal position, and the rest of the drill hole is visible, the No.1 piston is at the Top Dead Center of the compression stroke.

**NOTICE**

**If the rest of drill hole is invisible by camshaft housing, the No.6 piston is at the Top Dead Center of the compression stroke.**

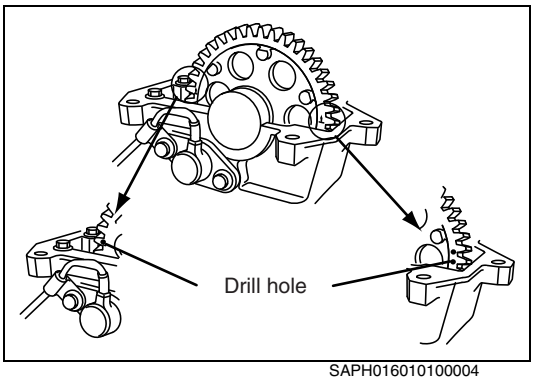


SAPH016010100004

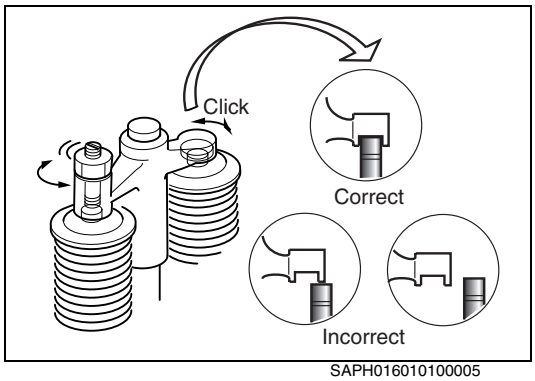

SAPH016010100005

(3) Make sure that the valve stem is correctly inserted in the cross head.

**NOTICE**

**Move the cross head with fingers right and left to confirm the valve stem is correctly inserted in the cross head by listening to the clicking sound.**

(4) Confirm that there are no foreign particles or dust between the cross head and the valve stem.

**2. VALVE CLEARANCE CHECKING**

**NOTICE**

**Before beginning the checking, you must perform "PREPARATION OF CHECKING AND ADJUSTMENT" described on page EN01-12.**

(1) You can understand which valve to adjust when No.1 or No.6 piston is at the Top Dead Center of the compression stroke by the following chart).

| | Cylinder | | | 1 | | 2 | | 3 | | 4 | | 5 | | 6 | |
|---|---|---|---|---|---|---|---|---|---|---|---|---|---|---|---|
| | Valve | | | IN | EX | IN | EX | IN | EX | IN | EX | IN | EX | IN | EX |
| With No.1 piston at T.D.C. on compression stroke | Camshaft gear condition | 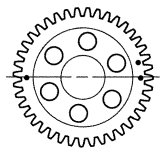 | Two drill holes and camshaft housing is horizontal. The rest of drill hole is visible. #1 | ○ | ○ | | ○ | ○ | | | ○ | ○ | | | |
| With No.6 piston at T.D.C. on compression stroke | | 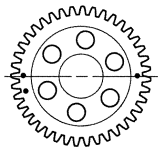 | Two drill holes and camshaft housing is horizontal. The rest of drill hole is invisible. #1 | | | ○ | | | ○ | ○ | | | ○ | ○ | ○ |

- **#1= View from rear side of camshaft housing**
- **○Mark: Possible to check valve clearance**
- **Firing order: 1-4-2-6-3-5**
- **T.D.C.: Top Dead Center**

(2) Before checking the valve clearance, make sure that the roller is on the base circle of the camshaft.

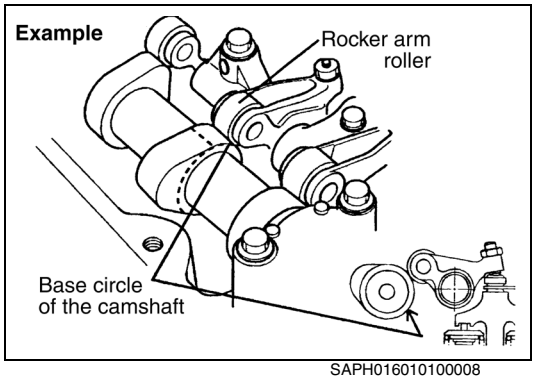

SAPH016010100008

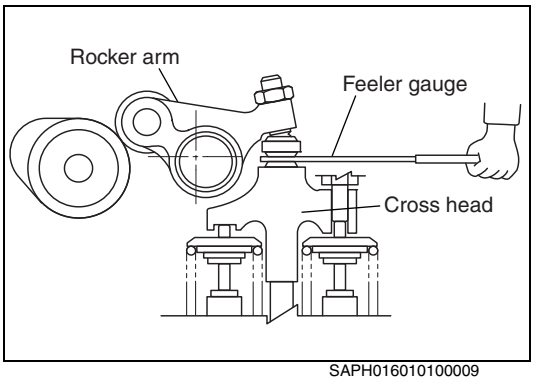

SAPH016010100009

(3) Insert a feeler gauge of the specified thickness as below between the rocker arm and the cross head to check the valve clearance.

**VALVE CLEARANCE (when cold)**

| | |
|---|---|
| **Intake valve** | **0.30 mm {0.0118 in.}** |
| **Exhaust valve** | **0.45 mm {0.0177 in.}** |

**NOTICE**

**Valve clearance adjustment is performed only when the checking result is outside the specified value.**

### 3. VALVE CLEARANCE ADJUSTMENT

**NOTICE**

**Valve clearance adjustment is performed only when the checking result is outside the specified value.**

**NOTICE**

- **Before beginning the adjustment you must perform "PREPARATION OF CHECKING AND ADJUSTMENT" described on page EN01-12.**
- **As for the valve which can adjust the valve clearance refer to the chart on page EN01-13.**
- **Make sure that the cylinder head bolt, rocker arm support bolt, nozzle clamp bolt, cam housing bolt and cam bearing cap bolt are tightened to the specified torque.**

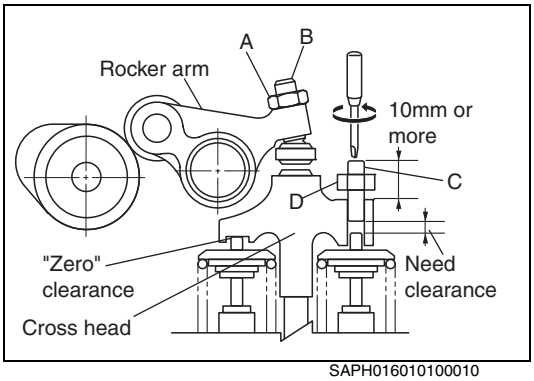

SAPH016010100010

(1) Loosen the adjusting screw lock nut A, D of the rocker arm and cross head fully.

(2) The cross head adjusting screw must protrude 10 mm {0.394 in.} or more from the cross head upper face.

**NOTICE**

**Unless the adjusting screw is completely loose to the valve stem head, the following adjustments may be adversely affected.**

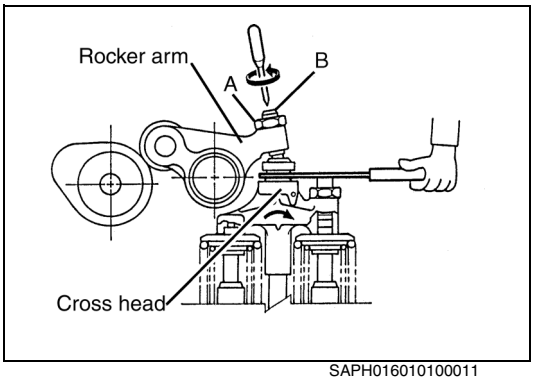

SAPH016010100011

(3) Insert a feeler gauge of the specified thickness shown below between the rocker arm and the cross head, and adjust the valve clearance with the adjust screw of the rocker arm.

**VALVE CLEARANCE (when cold)**

| | |
|---|---|
| **Intake valve** | **0.30 mm {0.0118 in.}** |
| **Exhaust valve** | **0.45 mm {0.0177 in.}** |

(4) After completion of the adjustment, tighten the lock nut A securely with the specified tightening torque.

**Tightening Torque:**

**25 N·m {250 kgf·cm, 18.1 lbf·ft}**

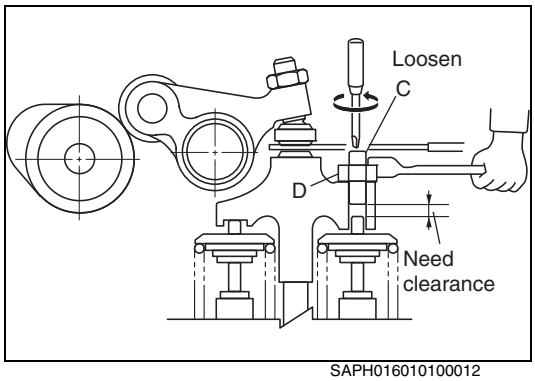

SAPH016010100012

(5) The condition of inserted feeler gauge, loosen the adjusting screw of the cross head, make sure that the feeler gauge does not feel loose.

**NOTICE**

**If the feeling of the feeler gauge becomes loose, repeat steps from (1).**

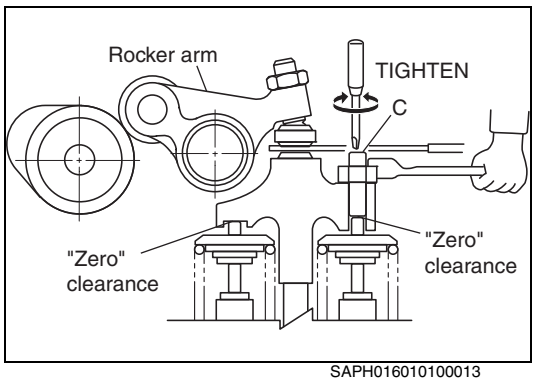

SAPH016010100013

(6) Tighten the adjusting screw C of the cross head until the feeler gauge does not move.

**NOTICE**

**In this situation, clearance between adjusting screw C and valve stem head is zero.**

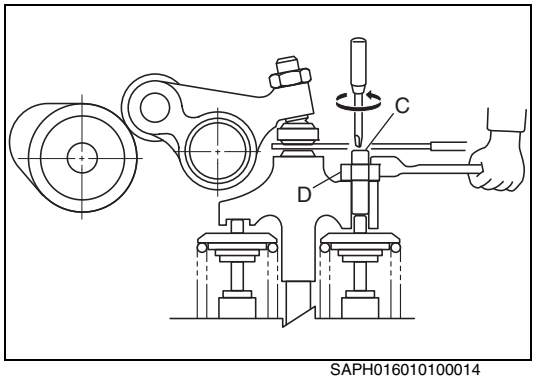

SAPH016010100014

(7) While loosening the adjusting screw C of the cross head gradually, adjust the valve clearance. Tighten the lock nut D of the cross head securely with the specified tightening torque when the feeler gauge feels correct.

**Tightening Torque:**
**25 N·m {250 kgf·cm, 18 lbf·ft}**

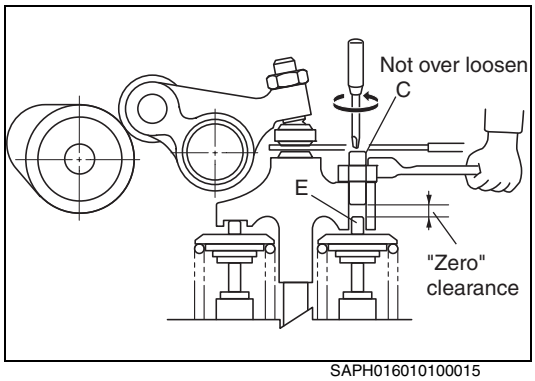

SAPH016010100015

**NOTICE**

- **Do not over loosen the adjusting screw.**
- **Over loosening of the adjusting screw C will cause the same condition as in step (3) again. The feeler gauge may feel correct, but there may be excessive clearance between the adjusting screw C of the cross head and the valve stem head E. This does not allow for correct adjustment.**

(8) Position each piston at Top Dead Center of compression stroke by turning the crankshaft counterclockwise viewed from flywheel side. Then adjust the valve clearance for each cylinder in the firing order.

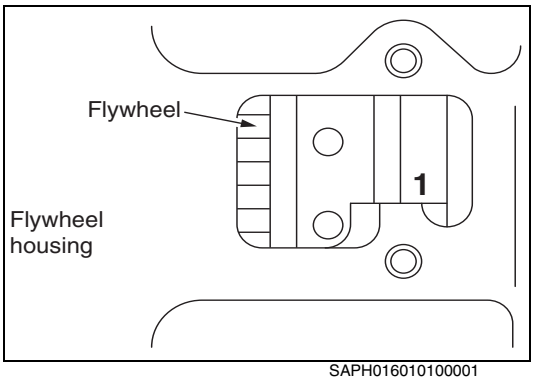

SAPH016010100001

## INJECTION TIMING INSPECTION PROCEDURES

**1. INSPECT THE INJECTION TIMING.**

(1) Turn the crankshaft counterclockwise, as viewed from the flywheel side, and then align the timing mark in the check window of the flywheel housing with a mark of "1/6". At this time, the No.1 cylinder or the No.6 cylinder is in the top dead center.

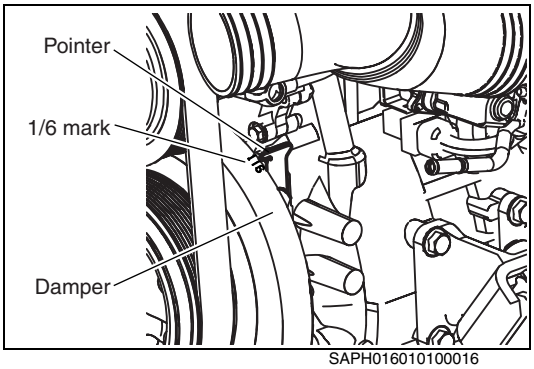

SAPH016010100016

(2) Make sure that the timing mark "1/6" on the damper is aligned with the pointer.

(3) At this time, insert a guide bolt (SST) through the plug hole in the side of the bearing holder case for installation of the supply pump.

**SST: Guide bolt (SZ105-08067)**

a. If the guide bolt is fully inserted, the No.1 cylinder is at Top Dead Center of compression stroke and the timing is correct.
b. If the guide bolt cannot be fully inserted, turn the crankshaft 1 more turn to obtain the 1/6 mark.

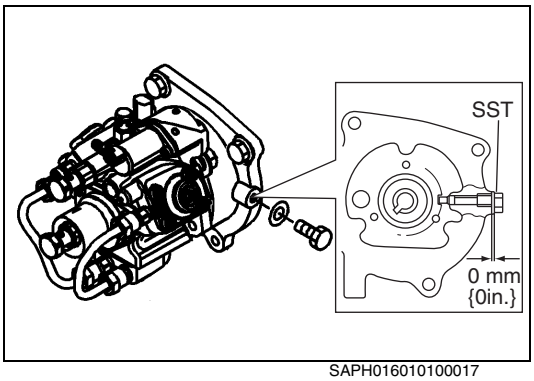

SAPH016010100017

(4) Insert the guide bolt again and confirm the correct timing.

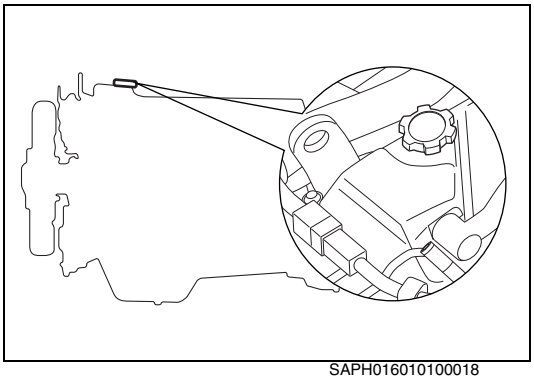
SAPH016010100018

## START THE ENGINE

**⚠ WARNING**

**Do not leave tools on or around the engine. Contact of tools with moving parts may result in personal injury or damage to equipment.**

**1. PREPARATION**

(1) Supply engine oil.

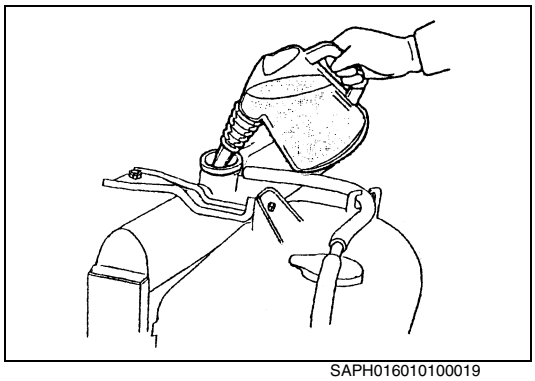

SAPH016010100019

(2) Supply cooling water and bleed air from it.

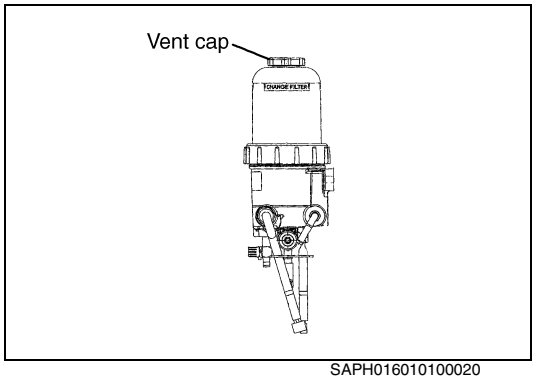


SAPH016010100020

(3) Bleed air from the fuel system.
**Refer to the section "AIR BLEEDING" in the chapter "FUEL SYSTEM (J08E)" on page EN07-31.**

(4) Check connection to the alternator.

**NOTICE**
**Starting the engine without wiring in place may burn out the alternator.**

(5) Check the engine stopping performance.

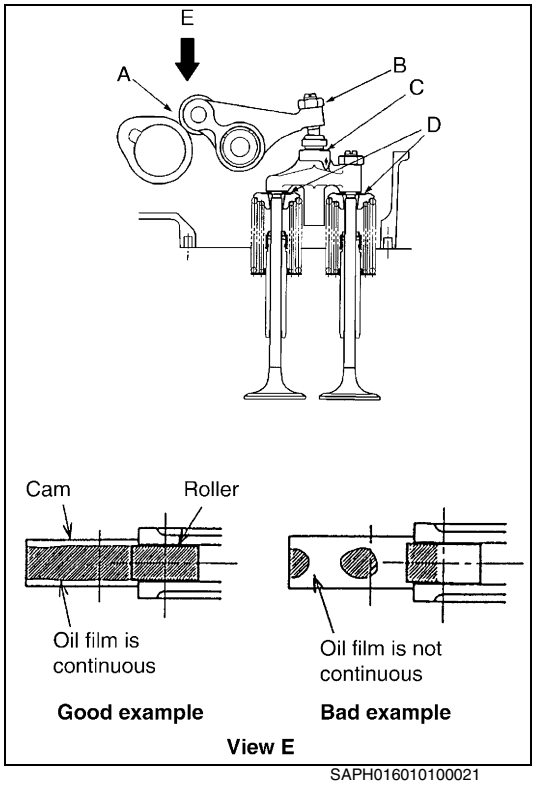


SAPH016010100021

## LUBRICATION

**1. CHECK THE ROCKER ARM.**
(1) Remove the head cover.
(2) Set the engine revolution to the specified idling revolution.
(3) After the engine starts, check that oil is supplied to the following locations of all rocker arms within approximately 10 seconds.
   a. Roller and cam face A
   b. Cross head top C and spring upper seat top face D through adjusting screw B

**NOTICE**
**If the supply of oil is delayed or not happening, hydraulic pressure may be low or the oil gallery may be clogged. Insufficient supply of oil may lead to seizure, abnormal wear or abnormal noise. Recheck the assembly.**

# SPECIAL TOOL

EN0160101K100001

Prior to starting an engine overhaul, it is necessary to have these special tools.

| Illustration | Part number | Tool name | Remarks | |
|---|---|---|---|---|
|  | S0955-21110 | COMPRESSION GAUGE ADAPTER (A) | For Overhaul criteria | |
| 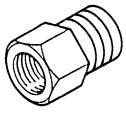 | S0955-21030 | COMPRESSION GAUGE ADAPTER (B) | For 3/4-16UNF thread size | Select according to the thread size of air gauge. |
| | S0955-21060 | COMPRESSION GAUGE ADAPTER (B) | For W16 threads 18 thread size | |
|  | S0940-91200 | CRANKING TOOL | | |
| 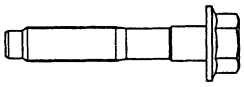 | SZ105-08067 | GUIDE BOLT | | |
| 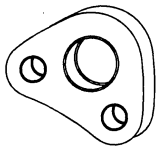 | S1228-11901 | ENGINE HANGER | | |
| 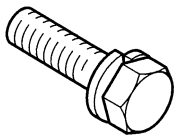 | SH782-41235 | BOLT | Use 2 pieces | |

# OVERHAUL CRITERIA

EN0160101H300002

## FACTORS TO DETERMINE THE ENGINE OVERHAUL

**1. LOW COMPRESSION PRESSURE.**

(1) Before measurement
   a. Charge the battery completely.
   b. Set the valve clearance to the correct value.
   c. Idle the engine (Coolant temperature at 80°C {176°F}).
   d. Remove the air cleaner.
   e. Remove all injectors.

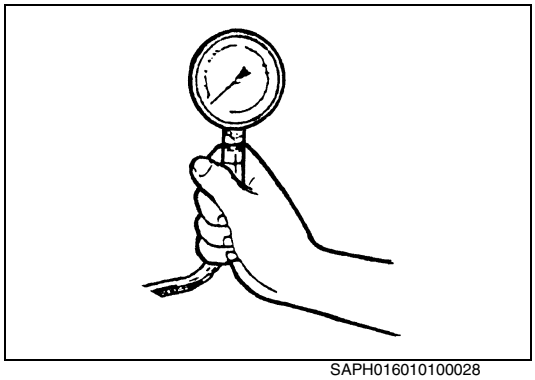

SAPH016010100028

(2) Measurement
   a. Insert the gauge adaptor into the nozzles.
   **SST:**
   **Compression gauge adaptor (A) (S0955-21110)**
   **Compression gauge adaptor (B) (S0955-21030)**
   **Compression gauge adaptor (B) (S0955-21060)**

   b. Run the engine with the starter and measure the compression pressure.

| Standard | Limit | Difference between each cylinder |
|---|---|---|
| 3.2-3.4 MPa {33-35 kgf/cm$^2$, 467-496 lbf/in$^2$} | 2.3 MPa {24 kgf/cm$^2$, 341 lbf/in$^2$} | 0.3 MPa {3 kgf/cm$^2$, 43 lbf/in.$^2$} or less |
| Engine revolution 150r/min | | |

**NOTICE**
**Do not operate the starter for more than 15 seconds.**

   c. Measure the compression pressure of each cylinder.

**NOTICE**
**Do not allow gas leakage from the seal face.**

(3) Reassemble the removed parts.

**2. ENGINE OIL PRESSURE.**

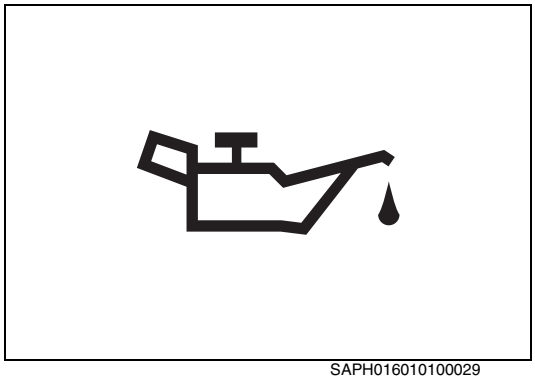

SAPH016010100029

(1) Check the oil pressure warning light when the oil and coolant temperature is hot [about 80°C {176°F}].
   a. If the warning light lightens, check the oil level.
   b. Check oil deterioration.
      If oil quality is poor, replace with a suitable grade oil.
   c. Remove the oil pressure switch and install the oil pressure gauge.

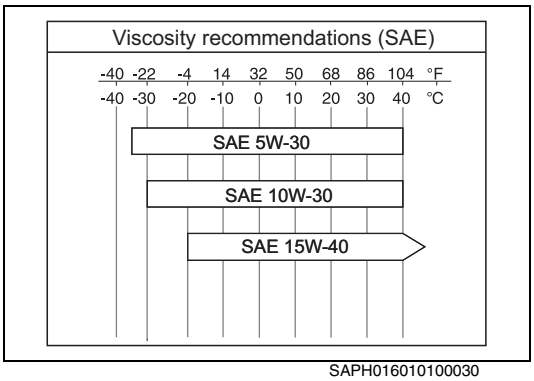

SAPH016010100030

d. Measure the oil pressure at a coolant temperature of 80°C {176°F} or more.

**Oil pressure**

| Standard | Limit |
|---|---|
| **49-490 kPa {0.5-5.0 kgf/cm$^2$, 7.11-71.10 lbf/in.$^2$}** | **Less than 49kPa {0.5 kgf/cm$^2$, 7.11 lbf/in.$^2$}** |

**3. OTHER FACTORS.**

(1) Increase of blow by gas
(2) Defective engine start
(3) Decrease of engine output
(4) Increase of fuel consumption
(5) Increase of engine noise
(6) Increase of oil consumption

# DISMOUNTING AND MOUNTING

EN0160101H100001

## IMPORTANT POINT - DISMOUNTING

**1. DISMOUNT THE ENGINE ASSEMBLY.**

(1) Park the vehicle on level ground and then block the wheels.
(2) Tilt the hood.
(3) Drain coolant from the radiator and cylinder block, and engine oil from the oil pan.

**⚠ WARNING**
**To avoid the danger of burns, do not drain the coolant and engine oil while the engine and radiator are still hot.**

(4) Remove the splash board and fender.
(5) Disconnect the power steering piping and hose.

**NOTICE**
**Refer to CHAPTER POWER STEERING for details.**

(6) Disconnect the electric lines, fuel lines and air lines.

**NOTICE**

- **Disconnect the battery cable from the negative terminal (-) of the battery and disconnect the electric lines.**
- **Cover open ends of the pipes, hoses and pumps to prevent entry of dirt.**

(7) Disconnect the hoses (coolant, heater and air intake) and remove the radiator with the intercooler.

**NOTICE**
**Do not damage the radiator.**

(8) Remove the air cleaner and bracket.
(9) Disconnect the air intake and exhaust lines.
(10) Disconnect the propeller shaft.
(11) Disconnect the parking brake cable, transmission control lever and transmission with clutch housing from the flywheel housing.

**NOTICE**
**Refer to the chapter "TRANSMISSION/TRANSFER CONTROL" and the chapter "TRANSMISSION MAIN UNIT" for details.**

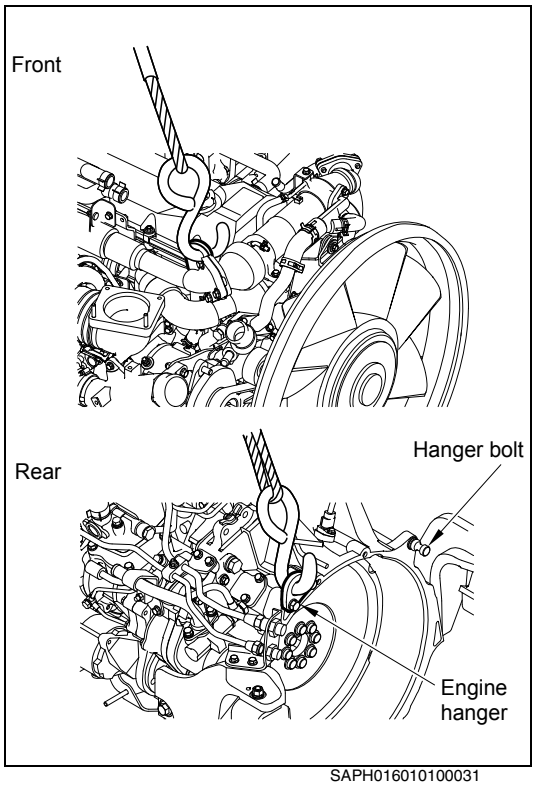

SAPH016010100031

(12) Dismount the engine assembly using the special tool.
**SST:**
**Engine hanger (S1228-11901)**
**Bolt (SH782-41235)**

**Tightening Torque:**
**100 N·m {1020 kgf·cm, 73.8lbf·ft}**

(13) Connect a cable from an engine hanger to the hanger bracket (1 point) on the front of the engine, and to the hanger bracket (1 point) on the flywheel housing at the rear of the engine. Using a hoist, raise the hanger until there is a bit of slack in the cables.
Engine weight: **Refer to the section "DATA AND SPECIFICATIONS".**

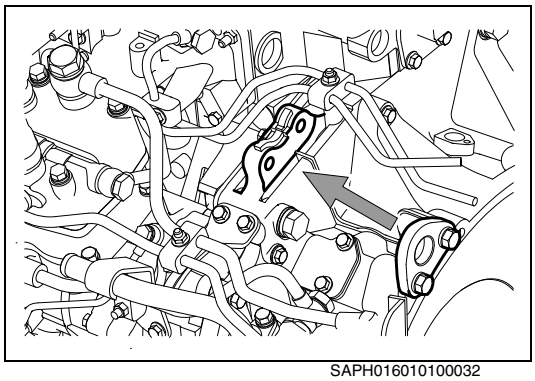
SAPH016010100032

**NOTICE**
**When the cable connection of the engine hanger to the hanger bracket causes infringement to the cab than follow procedure below.**

1. **Remove the fuel pipes (feed and return) to prevent damage.**
2. **Then remove the rear hanger bracket and install it on the front of the flywheel housing as shown in the figure.**

(14) Remove the engine mounting fitting nuts (front and rear, both sides).
(15) Lift the engine hanger so that the cables are fully tightened, then, after checking that the cables are securely, lift gently and remove the engine from the vehicle.

**NOTICE**
**When the transmission is attached to the engine, attach the third cable to the hanger bolt.**

## IMPORTANT POINTS - MOUNTING

**1. MOUNT THE ENGINE ASSEMBLY.**
(1) Mount the engine assembly in the reverse order of dismounting.
**Front side (chassis): 91 N·m {930 kgf·cm, 67 lbf·ft}**
**Front side (engine): 157 N·m {1600 kgf·cm, 115.7 lbf·ft}**
**Rear side (chassis): 91 N·m {930 kgf·cm, 67 lbf·ft}**
**Rear side (engine): 91 N·m {930 kgf·cm, 67 lbf·ft}**

**NOTICE**
**Check to see that there are no oil leaks, fuel leaks, coolant leaks, or air leaks.**

# LIQUID GASKET AND APPLICATION POINTS

EN0160101H200001

- Liquid gasket is used at the following positions for the J08E series engine.

**Liquid gasket specification:**
**S0413-21217: Black**
**Liquid gasket specification:**
**S0413-21270: Silver**
**Liquid gasket specification:**
**S0413-21211: White**

**1. LIQUID GASKET APPLICATION AND PART ASSEMBLY PROCEDURE.**

(1) Remove old liquid gasket from each part and matching parts and wipe off oil, moisture or dirt with a rag.
(2) Overlap the liquid gasket at the start and end of application.
(3) Be careful of misalignment when assembling parts with liquid gasket. If they are misaligned, reapply the liquid gasket.
(4) Assemble parts within 20 minutes of application.
If more than 20 minutes have passed, remove and reapply the liquid gasket.
(5) Wait for at least 15 minutes or more after assembly of parts before starting the engine.

**2. REMOVE PARTS.**

(1) When removing parts, do not use a tool for removal at one location only. Use the tool at various locations such as a flange step or gap for removal. When removing the gasket, be careful that gasket residue does not enter the engine.

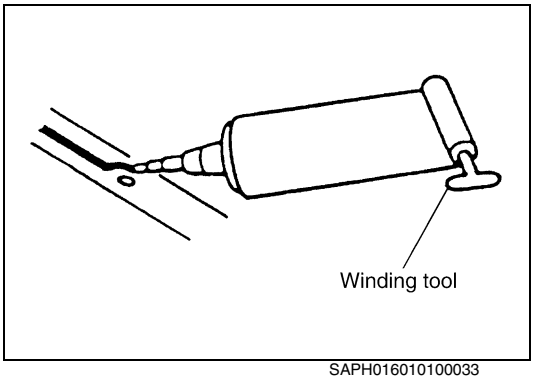

SAPH016010100033

**3. OTHERS.**

(1) For tube-type liquid gasket, use the winding tool that comes with the liquid gasket.

(2) For cartridge-type gasket, use an application gun.

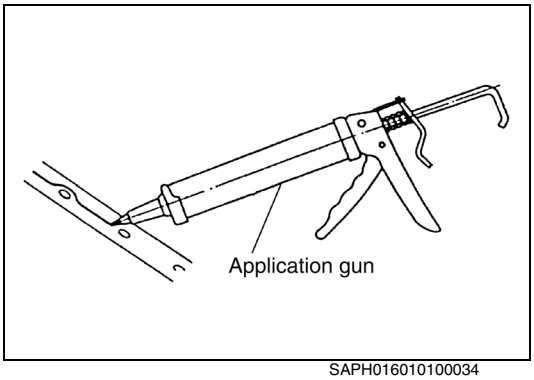

SAPH016010100034

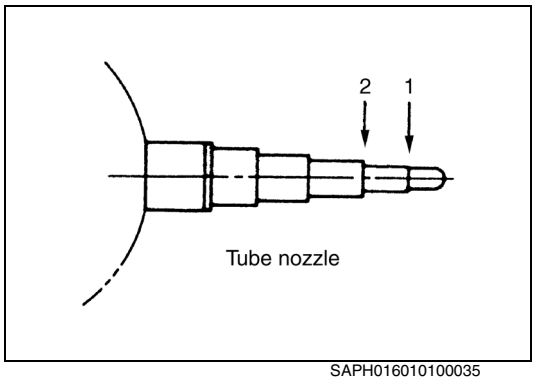

SAPH016010100035

(3) For tube-type liquid gasket, required width of application can be obtained by cutting the nozzle to suit.

1: Approximately 2 mm wide when cut at the first step
2: Approximately 5 mm wide when cut at the second step

**4. PARTS AND POSITIONS FOR LIQUID GASKET.**

(1) Apply liquid gasket to positions and types of gasket according to the table shown below.
Follow the application pattern at each position shown in the figures.

**Unit: mm {in.}**

| No. | Part name | Application position and pattern | Application width | Gasket to be used | Remarks |
|---|---|---|---|---|---|
| 1 | **Oil seal retainer** | **Matching flange face with the block**<br> 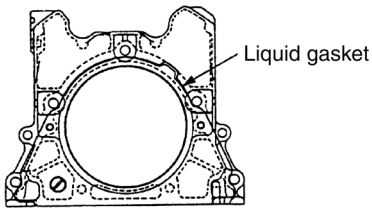 | **1.5-2.5 {0.0591-0.0984}** | **Black** | |
| 2 | **Coolant pump** | **Matching flange face with the block**<br> 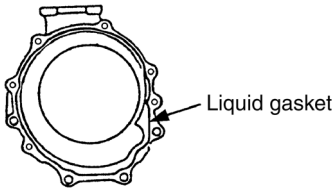 | **1.5-2.5 {0.0591-0.0984}** | **Black** | |
| 3 | **Oil cooler** | **Matching flange face with the block**<br> 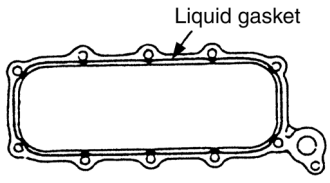 | **1.5-2.5 {0.0591-0.0984}** | **Black** | |
| 4 | **Thermostat case** | **Matching flange face with the cylinder head**<br> 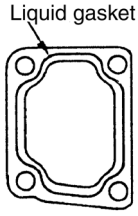 | **1.5-2.5 {0.0591-0.0984}** | **Black** | |

| No. | Part name | Application position and pattern | Application width | Gasket to be used | Remarks |
|---|---|---|---|---|---|
| 5 | **Flange** | **Matching face with the rear edge**<br> 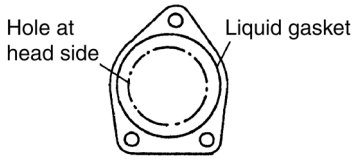 <br> | **1.5-2.5 {0.0591-0.0984}** | **Silver** | |
| 6 | **Intake pipe** | **Matching face with the intake manifold**<br>**Matching face with the intake manifold**<br> 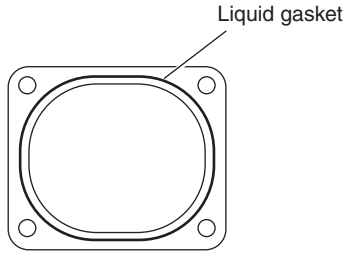 <br> | **1.5-2.5 {0.0591-0.0984}** | **Silver** | |

| No. | Part name | Application position and pattern | Application width | Gasket to be used | Remarks |
|---|---|---|---|---|---|
| 7 | Front and rear ends of upper/ lower faces of block | **Matching parts of block upper face rear end, gasket, rear end plate, flywheel housing, cylinder head gasket** | — | White | |
| | | **Matching parts of oil seal retainer and block lower face front end** | 1.5-2.5 {0.0591-0.0984} | Silver | |
| | | **Matching parts of block lower rear end, gasket, rear end plate and flywheel housing** | 1.5-2.5 {0.0591-0.0984} | Silver | |
| | | 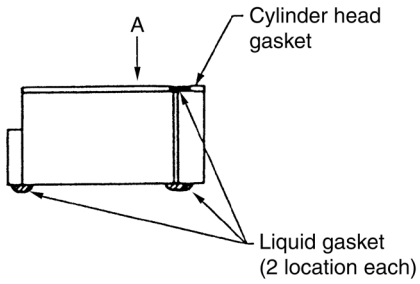 <br> 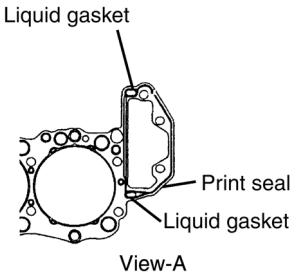 <br>View-A<br> 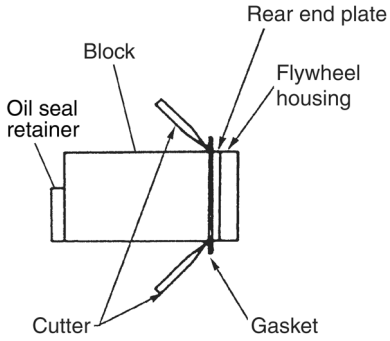 <br>**NOTICE**<br>**Cut the rear end plate gasket with a craft knife flush with the block upper face.** | | | |

| No. | Part name | Application position and pattern | Application width | Gasket to be used | Remarks |
|---|---|---|---|---|---|
| 8 | Flywheel housing | **Matching face of rear end plate**<br>Matching face of rear end plate<br> 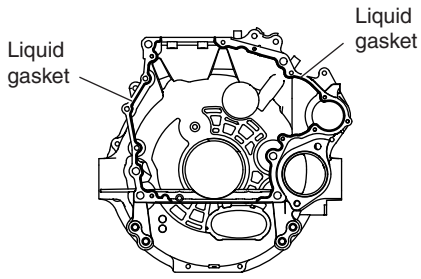 <br> | 1.5-2.5 {0.0591-0.0984} | Silver | |
| 9 | Cam housing | 1. Matching faces with cam housing and plug<br>2. Matching parts of cam housing, plug, cylinder head cover and gasket<br> 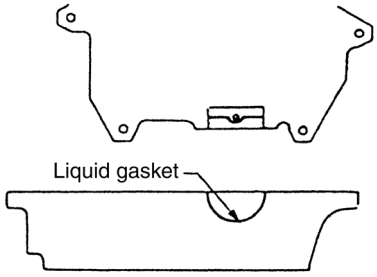 <br><br>**NOTICE**<br>• Application area of liquid gasket is half circle of cam housing. Never apply it to the upper half circle of the plug.<br>• Remove the excessive gasket completely.<br> 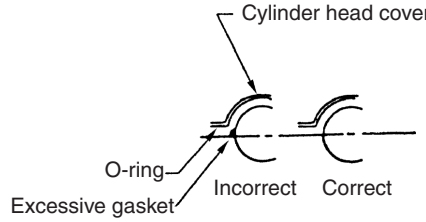 <br><br>• When the cylinder head cover is assembled, reapply the liquid gasket. (Assembly must be done within 20 minutes.)<br> 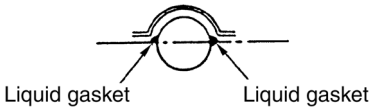 <br> | 1.5-2.5 {0.0591-0.0984} | Silver | 2 locations at front and rear ends |

**NOTICE**
**Figure on the right shows application "pattern" of the liquid gasket. Apply the liquid gasket to the center of seal flange inside whenever possible.**



# ENGINE MECHANICAL (J08E)

EN02-001

**CYLINDER HEAD ..... EN02-2**
COMPONENT LOCATOR..... EN02-2
SPECIAL TOOL..... EN02-5
OVERHAUL ..... EN02-6
INSPECTION AND REPAIR ..... EN02-17

**CRANKSHAFT FRONT END..... EN02-21**
COMPONENT LOCATOR..... EN02-21
SPECIAL TOOL..... EN02-22
OVERHAUL ..... EN02-23

**FLYWHEEL**
**AND FLYWHEEL HOUSING..... EN02-25**
COMPONENT LOCATOR..... EN02-25
SPECIAL TOOL..... EN02-26
OVERHAUL ..... EN02-26
INSPECTION AND REPAIR ..... EN02-32

**TIMING GEAR..... EN02-33**
COMPONENT LOCATOR..... EN02-33
SPECIAL TOOL..... EN02-34
OVERHAUL ..... EN02-35
INSPECTION AND REPAIR ..... EN02-37

**MAIN MOVING PARTS**
**AND CYLINDER BLOCK..... EN02-39**
COMPONENT LOCATOR..... EN02-39
SPECIAL TOOL..... EN02-42
OVERHAUL ..... EN02-44
INSPECTION AND REPAIR ..... EN02-57

# CYLINDER HEAD

## COMPONENT LOCATOR

EN0110602D100001

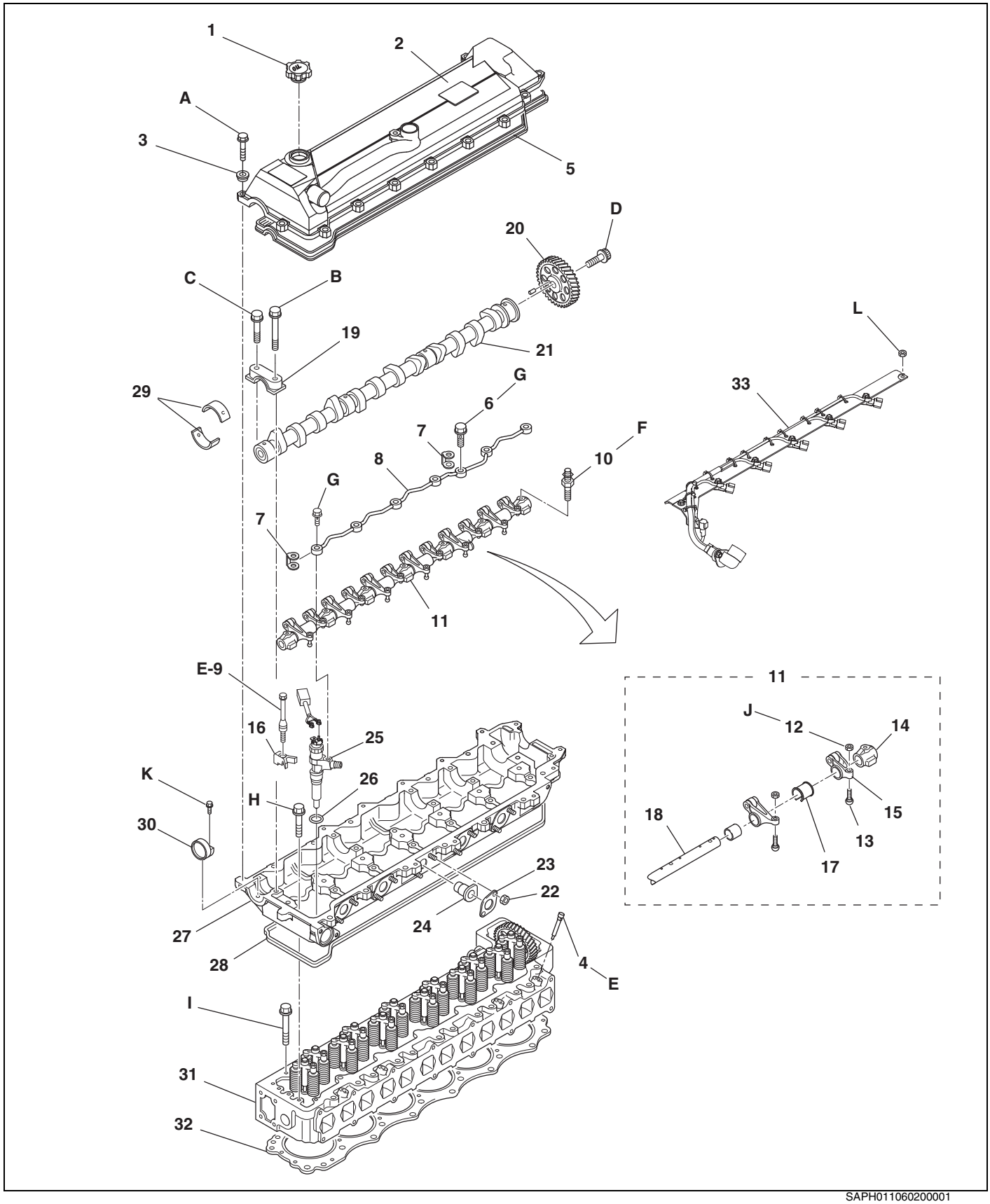


SAPH011060200001

| | | | |
|---|---|---|---|
| 1 | Oil filler cap | 18 | Valve rocker shaft |
| 2 | Cylinder head cover | 19 | Camshaft bearing cap |
| 3 | Silent block | 20 | Camshaft gear |
| 4 | Heater plug | 21 | Camshaft |
| 5 | Head cover gasket * | 22 | Nut |
| 6 | Union bolt | 23 | Plate |
| 7 | Gasket | 24 | Injection pipe oil seal |
| 8 | Leakage pipe | 25 | Injector |
| 9 | Injector clamp bolt | 26 | O-ring |
| 10 | Rocker arm support bolt | 27 | Camshaft housing |
| 11 | Rocker arm assembly | 28 | Camshaft housing gasket |
| 12 | Lock nut | 29 | Camshaft bearing |
| 13 | Adjust screw | 30 | Plug |
| 14 | Rocker arm support | 31 | Cylinder head assembly |
| 15 | Rocker arm | 32 | Cylinder head gasket * |
| 16 | Injector clamp | 33 | Harness assy |
| 17 | Collar | | |

*: Nonreusable. Be sure to use new parts.

Tightening torque Unit: N·m {kgf·cm, lbf·ft}

| | | | |
|---|---|---|---|
| A | 28.5 {290, 21} | G | 12.3 {126, 9} |
| B | 31 {320, 23} | H | 28.5 {290, 21} |
| C | 31 {320, 23} | I | 59 {600, 43.4}+90°+90° # |
| D | 59 {600, 43.4}+90° # | J | 25 {250, 18.1} |
| E | 25 {250, 18.1} | K | 6 {60, 4.3} |
| F | 45 {459, 33.2} # | L | 25 {250, 18.1} |

#=Apply oil to the threads and seat surfaces before tightening.

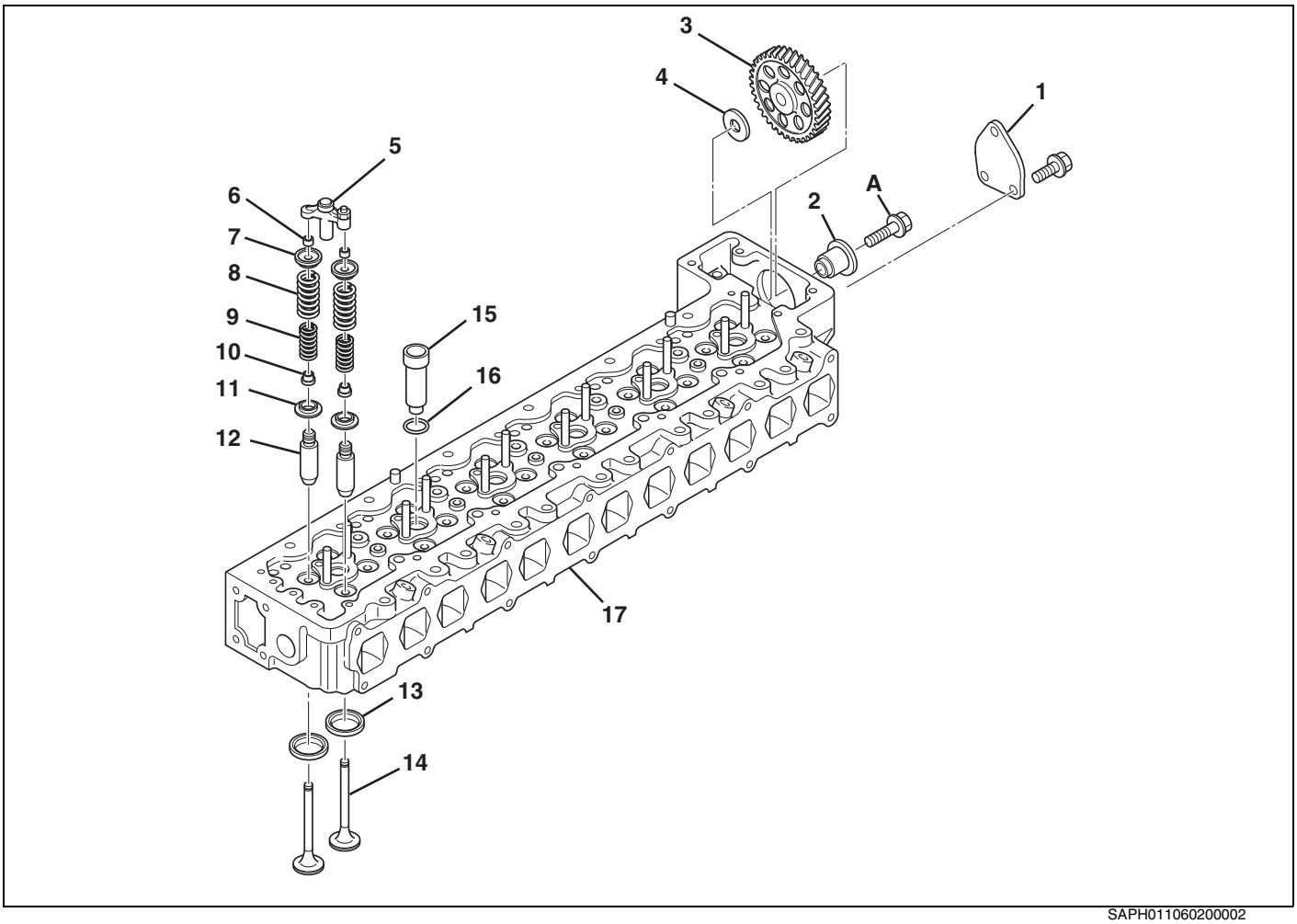


SAPH011060200002

| | | | |
|---|---|---|---|
| 1 | Flange | 10 | Valve stem seal * |
| 2 | Idle gear shaft | 11 | Valve spring seat lower |
| 3 | Camshaft idle gear | 12 | Valve stem guide |
| 4 | Idle gear thrust plate | 13 | Valve seat |
| 5 | Cross head | 14 | Valve |
| 6 | Valve spring retainer | 15 | Nozzle seat |
| 7 | Valve spring seat upper | 16 | O-ring * |
| 8 | Valve spring outer | 17 | Cylinder head block |
| 9 | Valve spring inner | | |

***: Nonreusable. Be sure to use new parts.**

**Tightening torque** **Unit: N·m {kgf·cm, lbf·ft}**

| | | |
|---|---|---|
| A | 108 {1,100, 79.6}# | |

**#=Apply oil to the threads and seat surfaces before tightening.**

# SPECIAL TOOL

EN0110602K100001

Prior to starting an engine overhaul, it is necessary to have these special tools.

| Illustration | Part number | Tool name | Remarks |
|---|---|---|---|
| 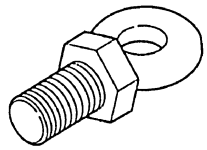 | S0943-31070 | EYE BOLT | |
| 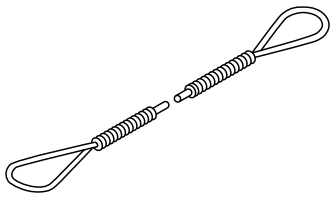 | S0949-11010 | WIRE | |
| 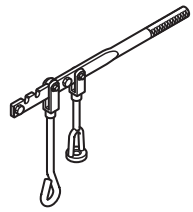 | S0947-01170 | VALVE SPRING PRESS | |
| 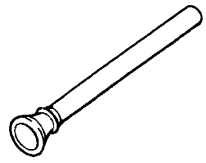 | S0943-11020 | VALVE LAPPING TOOL | |
| 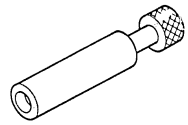 | S0947-22100 | VALVE STEM SEAL PRESS | |
| 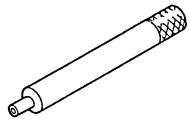 | S0947-21210 | BAR | For Nozzle sleeve |
|  | SN441-00610 | STEEL BALL | Used with S0947-21210 |
| 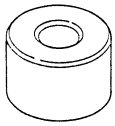 | S0947-11520 | GUIDE | |

# OVERHAUL

EN0110602H200001

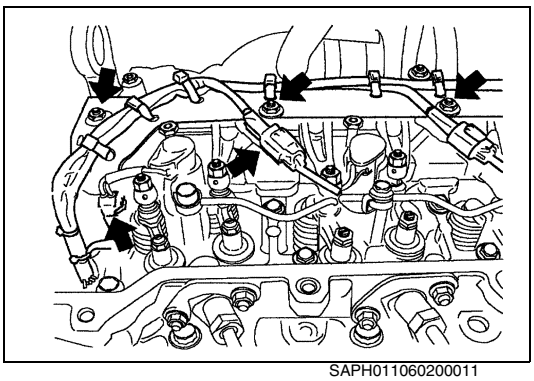
SAPH011060200011

## IMPORTANT POINTS - DISASSEMBLY

**1. DISASSEMBLE THE CYLINDER HEAD.**

(1) Clean parts around the injector and fuel system connections.

**NOTICE**

**Entry of foreign particles into the combustion chamber may result in engine trouble.**

(2) Remove the injector harness assy.
   a. Disconnect the connector of injector.
   b. Remove the 7 nuts, disconnect the injector harness assy with plate.

(3) Remove the injector assembly.

**NOTICE**

**Refer to the chapter "FUEL SYSTEM".**

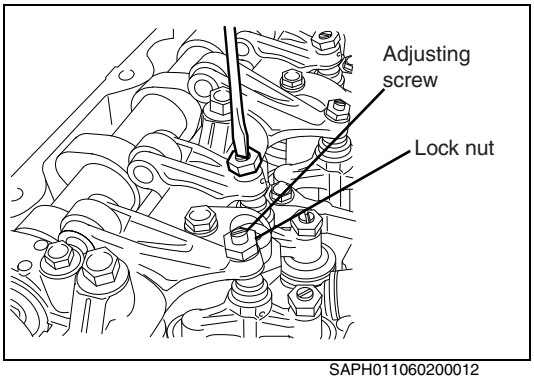

SAPH011060200012

(4) Remove the rocker arm assembly.
   a. Loosen the lock nut at the end of the rocker arm and turn the adjusting screw counterclockwise completely.

**NOTICE**

**Not untightening the adjusting screw may result in a bent rocker shaft.**

   b. Loosen the injector clamp bolt.

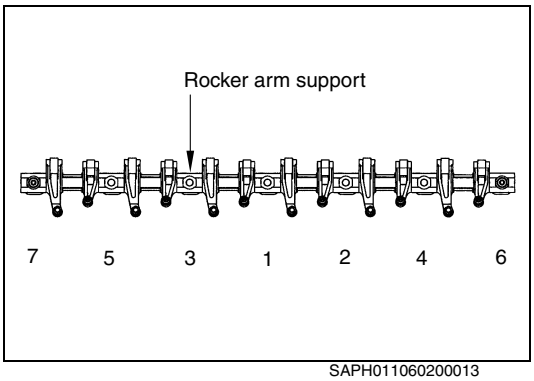

SAPH011060200013

   c. Loosen the rocker arm support bolt as shown in the figure.

**NOTICE**

**If the cross head is removed from the valve during disassembly of the rocker arm assembly, reassemble the cross head as it was.**

(5) Remove the camshaft.

(6) Remove the camshaft housing.

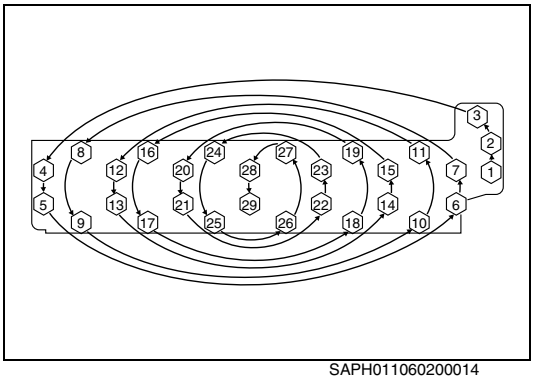

SAPH011060200014

(7) Remove the cylinder head bolts.
   a. Gradually loosen bolts three times in the order shown in the figure.

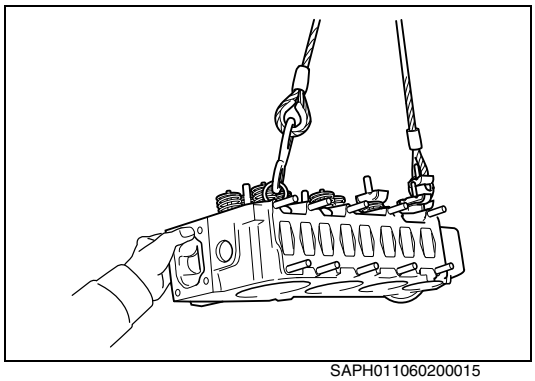
SAPH011060200015

(8) Lift and remove the cylinder head using the special tool and hoist.
**SST:**
**Eye bolt (S0943-31070)**
**Wire (S0949-11010)**

**NOTICE**

- **Do not damage the cylinder head lower surface or cylinder block upper surface during removal of the cylinder head.**
- **If it is difficult to lift off the cylinder head, pry with a chisel between the cylinder head and cylinder block.**

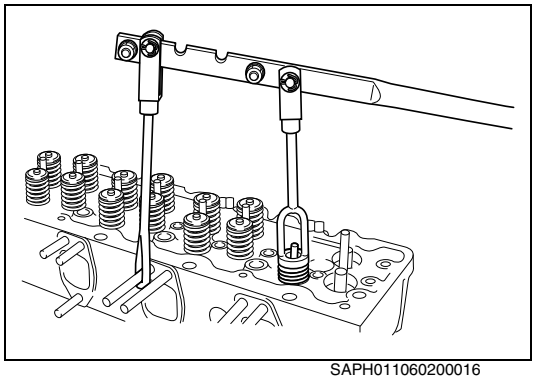
SAPH011060200016

**2. DISASSEMBLE THE VALVE SYSTEM.**
(1) Remove the valve spring retainer using the special tool.
**SST: Valve spring press (S0947-01170)**

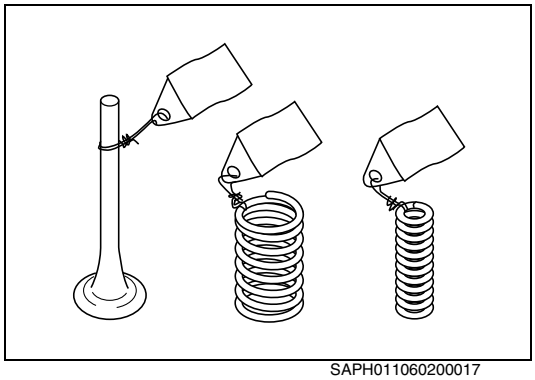
SAPH011060200017

(2) Remove the intake and exhaust valve.

**NOTICE**
**Attaching tags to the valves (giving corresponding cylinder Nos.) will eliminate time required for lapping the valve seats on reassembly.**

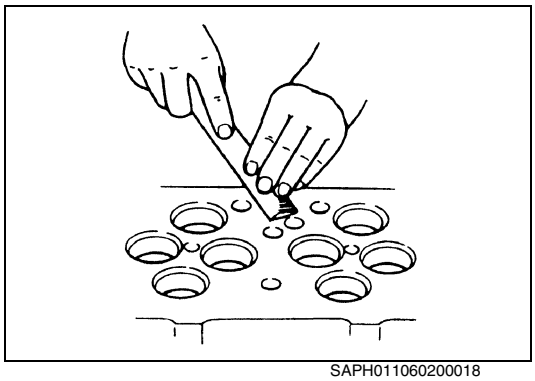
SAPH011060200018

**3. CLEAN THE CYLINDER HEAD.**
(1) Clean the cylinder head and remove carbon deposits or foreign particles.

**NOTICE**
**Be careful not to damage the cylinder head lower surface when removing carbon deposits or foreign particles.**

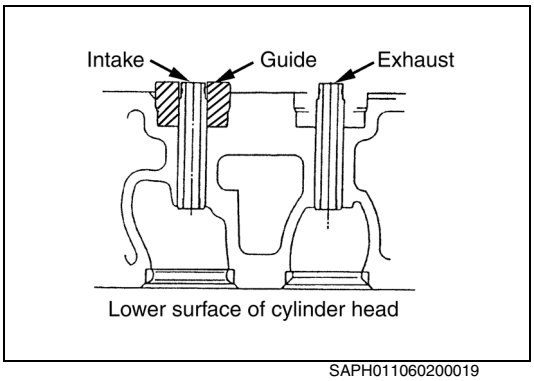

SAPH011060200019

## IMPORTANT POINTS - REPLACEMENT

**1. REPLACE THE VALVE GUIDE.**

(1) Remove the valve stem seal.

(2) For removal, strike the valve guide with a brass bar and hammer.

**⚠ WARNING**

**Be sure to wear protective goggles. Striking the valve guide when removing the valve guide may cause metal chips to fly up.**

(3) When installing a new valve guide, do not twist the end. Press fit the valve guide using the special tool.
**SST: Guide (S0947-11520)**

**NOTICE**

- **Be careful not to damage the valve stem at the upper or lower end of the guide during press-fitting.**
- **Be sure to apply engine oil around the valve guide during press-fitting.**

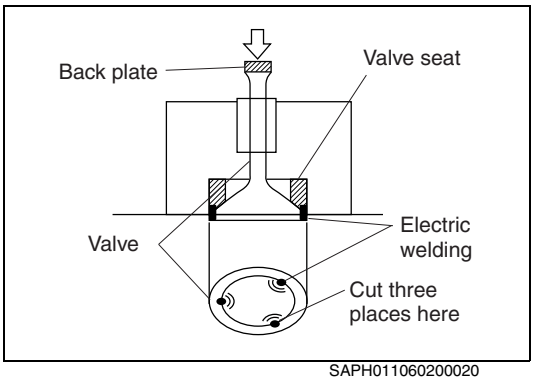

SAPH011060200020

**2. REPLACE THE VALVE SEAT.**

(1) When replacing the valve seat, cut three places on the circumference of an unwanted valve and weld it to the valve seat.

**NOTICE**

**To protect the lower surface of the cylinder head from welding spatter, be sure to apply grease before welding.**

(2) Place a (brass) back plate at the top of the valve system and strike it with a hammer to remove the valve seat.

**⚠ WARNING**

**Be sure to wear protective goggles. Striking the valve seat for removal of valve seat may cause metal chips to fly up.**

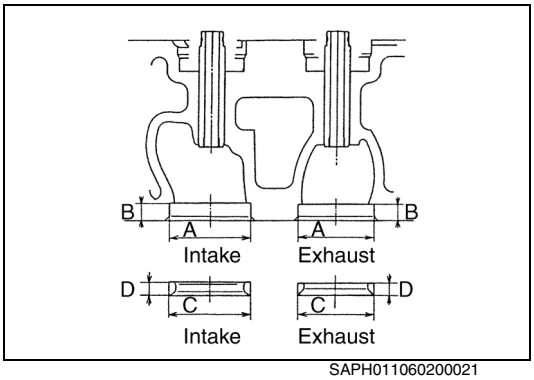

SAPH011060200021

(3) Machine the valve according to the valve seat dimensions.

**Unit: mm {in.}**

| | | Intake | Exhaust |
|---|---|---|---|
| Cylinder head side | A | 41-41.016 {1.6142-1.6148} | 39-39.016 {1.5355-1.5360} |
| | B | 9.4-9.6 {0.3701-0.3779} | 8.6-8.8 {0.3386-0.3464} |
| Valve seat side | C | 41.085-41.1 {1.6176-1.6181} | 39.12-39.135 {1.5402-1.5407} |
| | D | 7-7.2 {0.2756-0.2834} | 6-6.2 {0.2363-0.2440} |

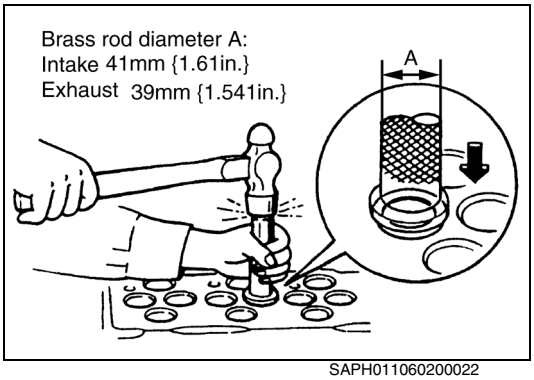

SAPH011060200022

(4) Heat the cylinder head to 80 - 100°C {176 - 212°F} in hot water. After cooling the valve seat, insert it into the cylinder head.

**⚠ WARNING**

**Be sure to wear protective goggles. Punching the nozzle seat when installing nozzle seat may cause metal chips to fly up.**

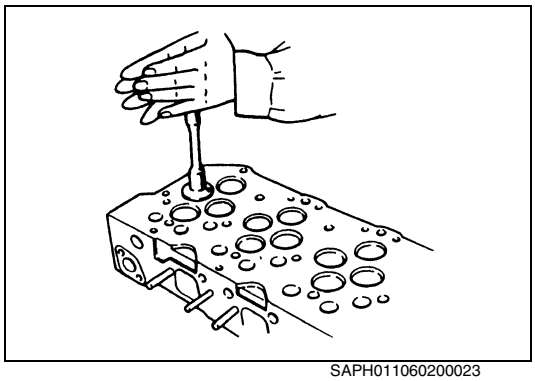

SAPH011060200023

(5) Apply a small amount of lapping compound to the contact surfaces of the valve and valve seat. Turn the valve using the special tool and tap it lightly to lap.
**SST: Valve lapping tool (S0943-11020)**

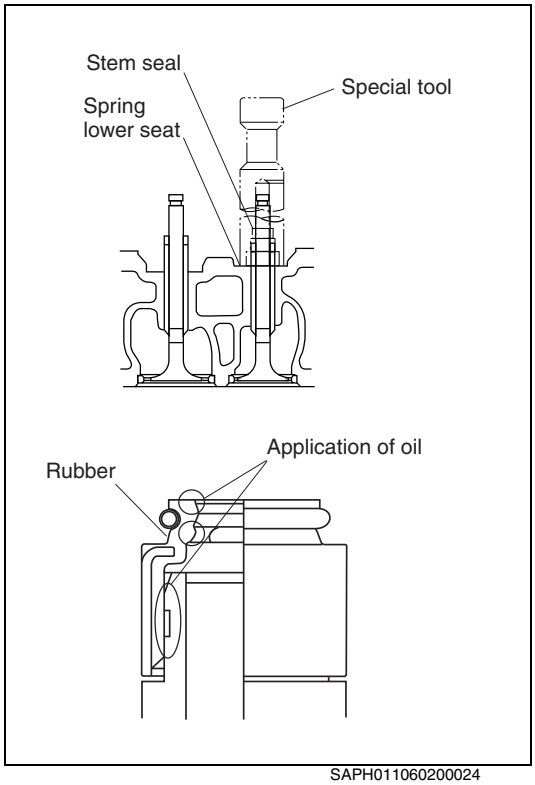


SAPH011060200024

**3. REPLACE THE VALVE STEM SEAL.**

(1) After removing the valve stem seal, assemble the spring lower seat and apply engine oil to the stem seal lip. Punch it into the valve guide using the special tool.
**SST: Valve stem seal press (S0947-22100)**

**⚠ WARNING**
**Be sure to wear protective goggles. Striking the valve stem seal for installing of valve stem seal may cause metal chips to fly up.**

**NOTICE**
**After assembly of the stem seal, check for deformation or cracking of the rubber or incline.**

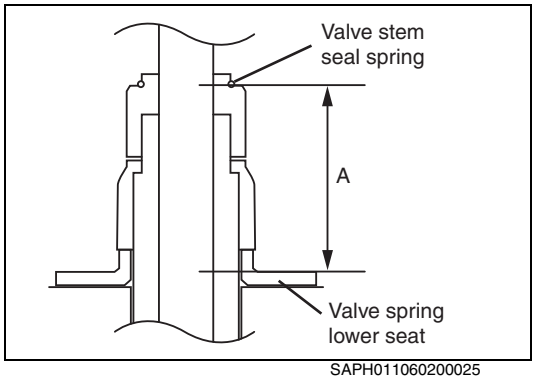


SAPH011060200025

(2) After punching the valve stem seal, measure the height A.

**Height A: 22.5-23.0 mm {0.886-0.906 in.}**

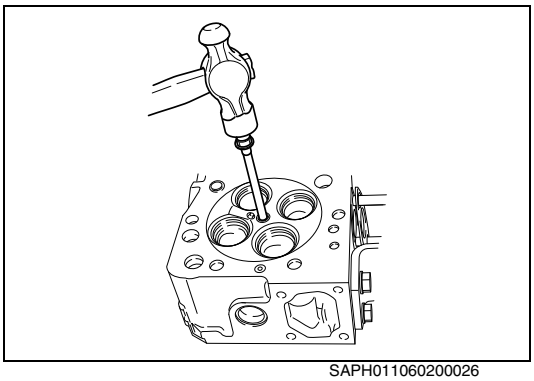
SAPH011060200026

**4. REPLACE THE NOZZLE SEAT.**

(1) Tap the nozzle seat from the cylinder head lower surface.
Then, screw in a suitable bolt and strike the bolt head with a hammer to remove the nozzle seat from the cylinder head.

**⚠ WARNING**

**Be sure to wear protective goggles. Punching the nozzle seat when installing nozzle seat may cause metal chips to fly up.**

**NOTICE**

**After removing the nozzle seat, remove the rest of liquid gasket or the adhesion such as dust completely.**

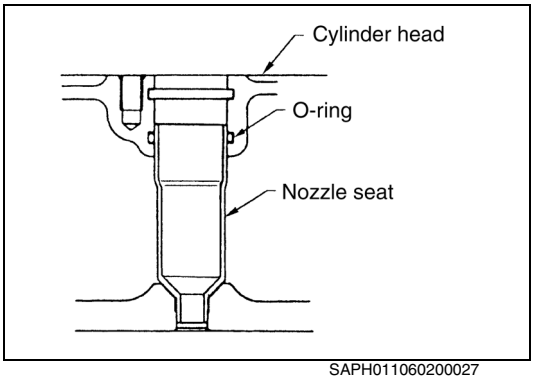

SAPH011060200027

(2) After inserting the O-ring into the nozzle seat insertion hole of the cylinder head, apply liquid packing (Three Bond No. 1211 or equivalent) to the lower part of the new nozzle seat and assemble it onto the cylinder head.

**NOTICE**

**Be sure to replace the O-ring with a new one. Reuse of the O-ring may cause water or gas leakage, resulting in overheating or cracking of the cylinder head.**

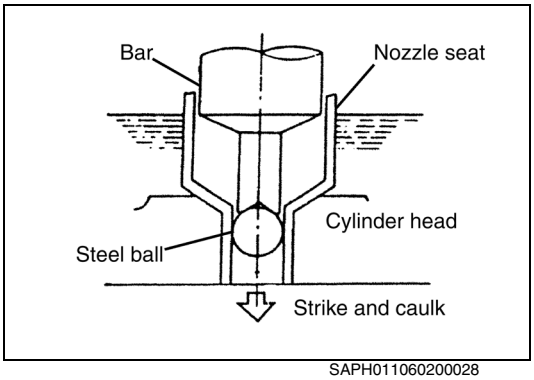

SAPH011060200028

(3) Caulk the nozzle seat with the special tools.
**SST:**
**Bar (S0947-21210)**
**Steel ball (SN441-00610)**

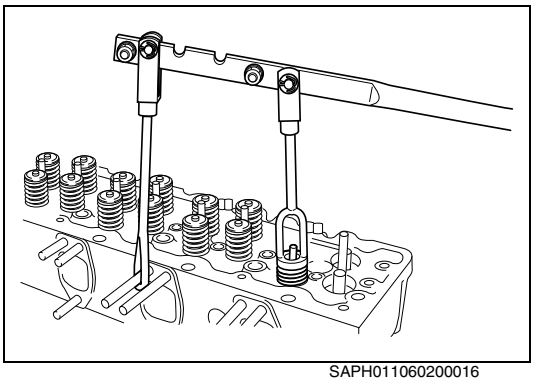
SAPH011060200016

## IMPORTANT POINTS - ASSEMBLY

**1. ASSEMBLE THE VALVE AND VALVE SPRING.**

(1) Install the valve spring retainer at the valve spring upper seat using the special tool.
**SST: Valve spring press (S0947-01170)**

**NOTICE**

- **Be sure to apply engine oil to the contact surface of each part before assembly.**
- **Be sure to place each valve in its original position.**
- **When the valve spring is compressed, be careful of damage to the stem seal due to contact of the upper seat.**
- **Since this valve spring is evenly pitched, it can be installed either end up.**

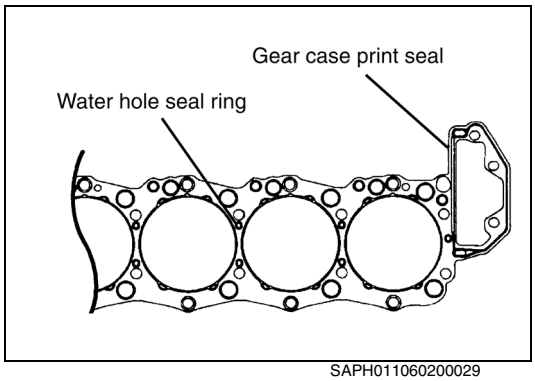


SAPH011060200029

**2. INSTALL THE CYLINDER HEAD GASKET.**

**NOTICE**

- **When installing the cylinder head, install the new gasket after removing dirt, moisture and oil on the cylinder head and cylinder block surface.**
- **Never reuse the gasket as it may cause engine damage.**
- **The twelve water hole seal rings between the bores are easily damaged. Do not touch them with your hands or other objects. Make sure that the seal rings are not loose or damaged.**
- **Since silicon material is used for the gear case print seal, make sure that there is no peeling before assembly.**

(1) Install the cylinder head gasket on the cylinder block and flywheel housing.

(2) Fill the hole at the back of the cylinder head gasket with liquid gasket.

**NOTICE**

**Make sure that the liquid gasket surface will be in a convex shape above the head gasket upper surface.**

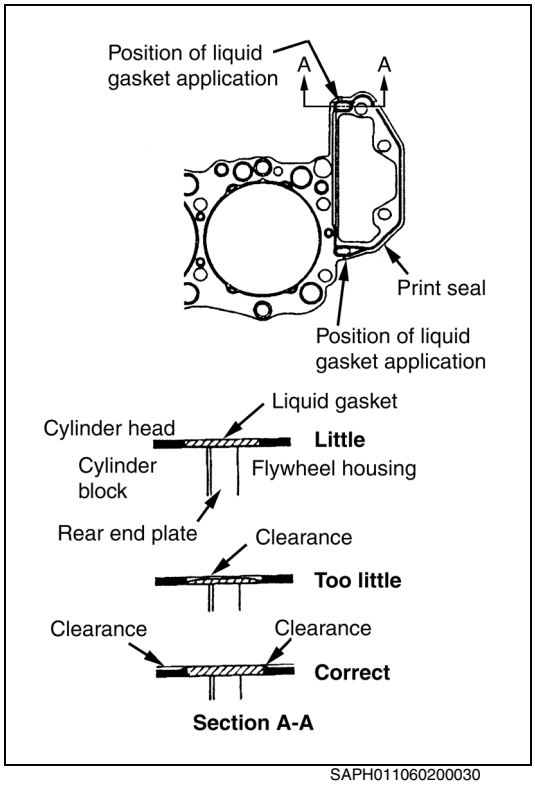


SAPH011060200030

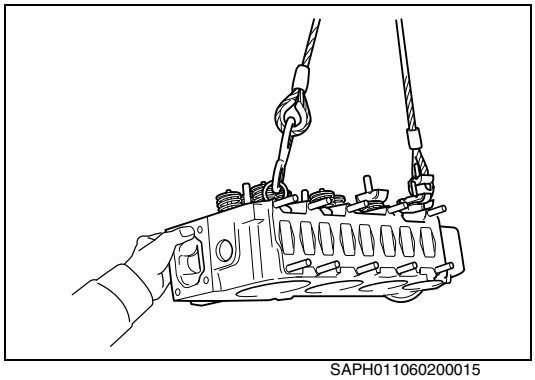

SAPH011060200015

**3. INSTALL THE CYLINDER HEAD.**

(1) Using the special tool and hoist, install the cylinder head.
**SST:**
**Eye bolt (S0943-31070)**
**Wire (S0949-11010)**

**NOTICE**

**When installing the cylinder head, pay attention to cam idle gear and sub idle gear engagement.**

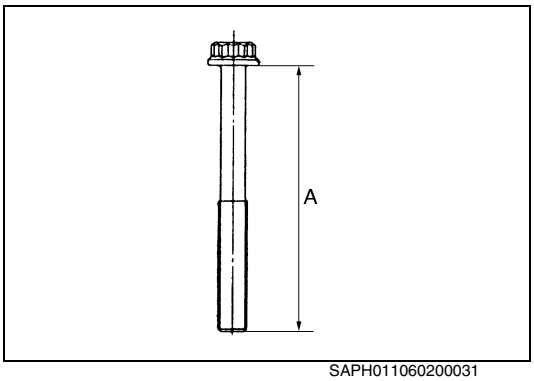

SAPH011060200031

**4. TIGHTEN THE CYLINDER HEAD BOLT.**

(1) Measure the length of the M12 head bolts, if the length is A or more, replace with new bolts.

| Dimension A | 125.5 mm {4.941 in.} |
|---|---|

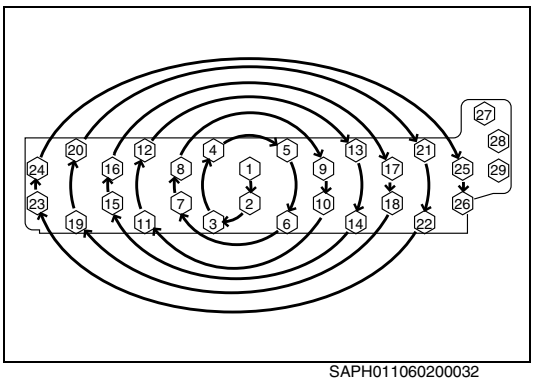

SAPH011060200032

(2) Apply clean engine oil to the bolt surface and bolt threads of the M10 and M12 bolts.
(3) Clean the bolt seats completely on the cylinder head upper surface.
(4) Tighten No. 1 - No. 26 (M12 bolts) in the order shown in the figure to the specified torque.
**Tightening Torque:**
**59 N·m {600 kgf·cm, 43.4 lbf·ft}**

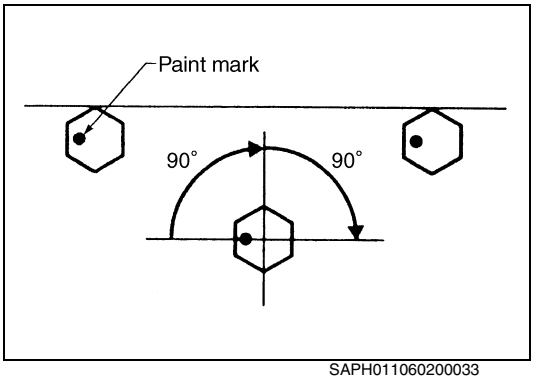

SAPH011060200033

(5) Mark the M12 bolts with paint to indicate the same directions as shown in the figure.
(6) Turn No. 1 - No. 26 (M12 bolts) 90° (1/4 turn) in the same order as in (4).
(7) Retighten them 90° (1/4 turn) as step (6).
(8) Make sure that all paint marks face the same direction.

**NOTICE**
**When adding torque, never untighten the bolts, even if they have been overtightened.**

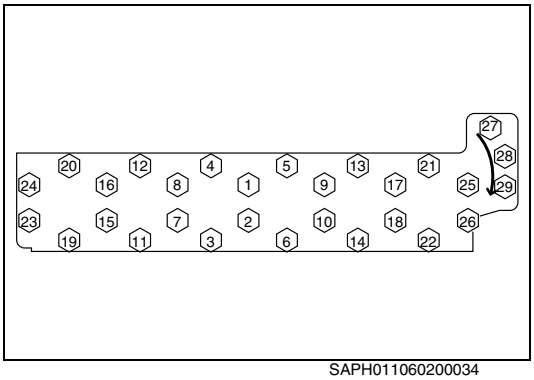

SAPH011060200034

(9) Tighten No. 27 - No. 29 (M10 bolts) in the order shown in the figure to the specified torque below.
**Tightening Torque:**
**59 N·m {600 kgf·cm, 43.4 lbf·ft}**

**5. INSTALL THE CAMSHAFT HOUSING.**

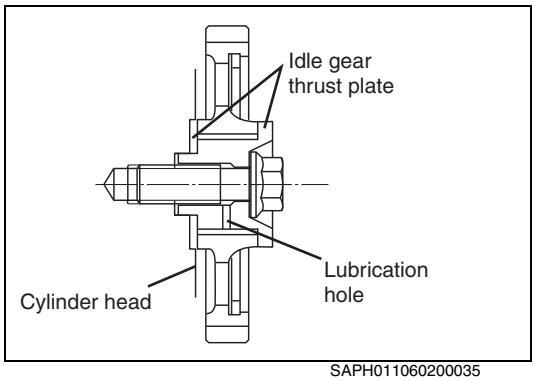

SAPH011060200035

**6. INSTALL THE CAM IDLE GEAR.**

**NOTICE**

- **Install the cam idle gear shaft through the thrust plate as shown in the figure so that the lubrication hole is downward.**
- **Apply clean engine oil to the bolt seat and bolt threads.**

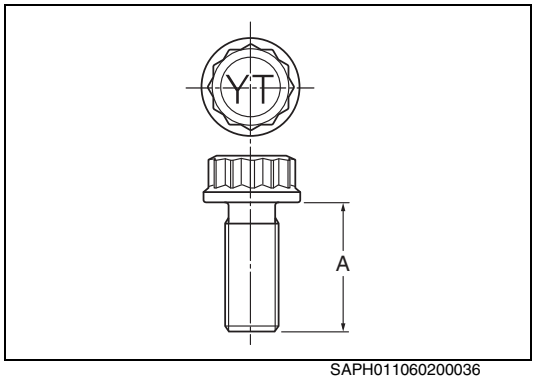

SAPH011060200036

**7. ASSEMBLE THE CAMSHAFT GEAR.**

(1) Measure the length of the camshaft gear bolts, if the length is A or more, replace with new bolts.

| Dimension A | 30 mm {1.18 in.} |
|---|---|

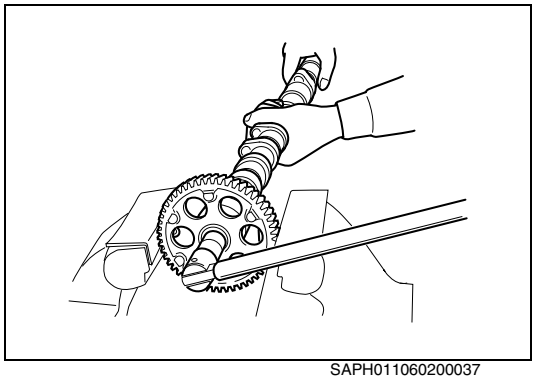
SAPH011060200037

(2) Make sure that there is neither damage to the camshaft gear or camshaft nor dirt on them.

(3) Apply clean engine oil to the bolt surface and bolt threads and tighten them to the specified torque below.
**Tightening Torque:**
**59 N·m {600 kgf·cm, 43.4 lbf·ft}**

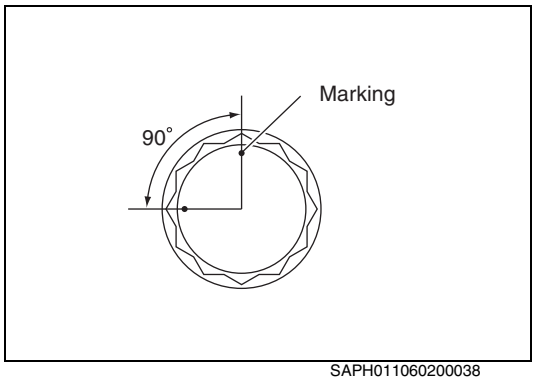

SAPH011060200038

(4) Turn bolts an additional 90° (1/4 turn).

**NOTICE**

**When adding torque, never untighten the bolt, even if it has been overtightened.**

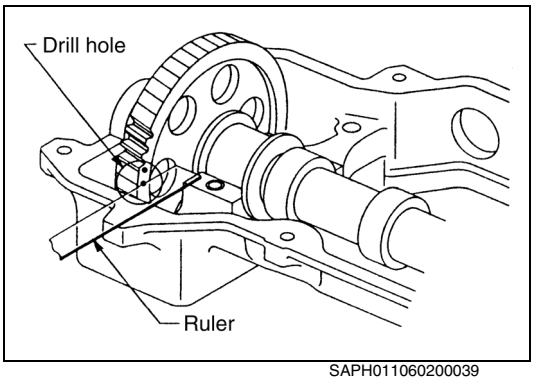

SAPH011060200039

**8. INSTALL THE CAMSHAFT.**

(1) Align the mark on the flywheel with the flywheel housing pointer to set the No. 1 piston to top dead center of the compression stroke.

**NOTICE**

**Engine adjustment - Refer to "PREPARATION OF CHECKING AND ADJUSTMENT".**

(2) Install the camshaft into the cam housing.

**NOTICE**

**Two drill holes on the camshaft gear should be located at left side and lower drill hole should match with the camshaft housing upper surface.**

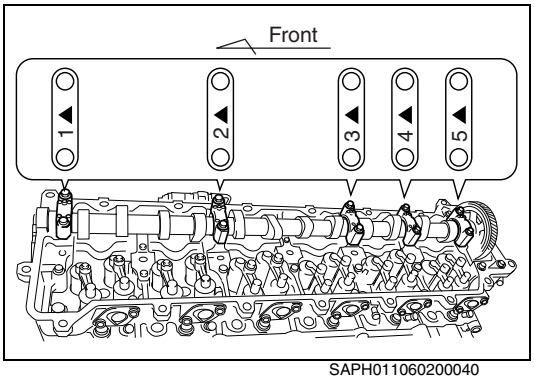

SAPH011060200040

(3) Install Camshaft bearing caps by fitting the position, in the stamped order of 1, 2, 3, 4 and 5, with each engraved mark headed toward engine front.
**Tightening Torque:**
**31 N·m {320 kgf·cm, 23 lbf·ft}**

**9. INSTALL THE ROCKER ARM ASSEMBLY.**

(1) Make sure that the cross head is on each valve.

**NOTICE**

**If the cross head is assembled whilst off the valve, the upper seat will be pressed, resulting in a loose valve.**

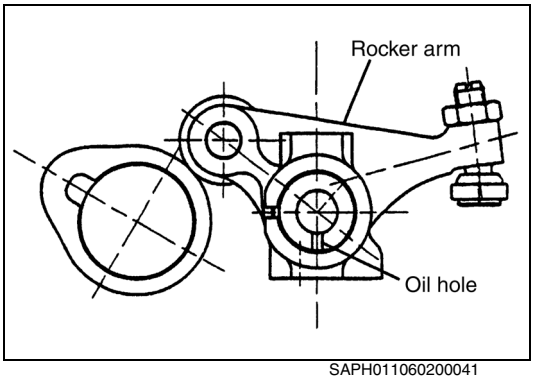

SAPH011060200041

(2) Make sure that the adjusting screw at the end of the rocker arm is completely screwed in.

**NOTICE**

**Make sure the oil hole is placed below.**

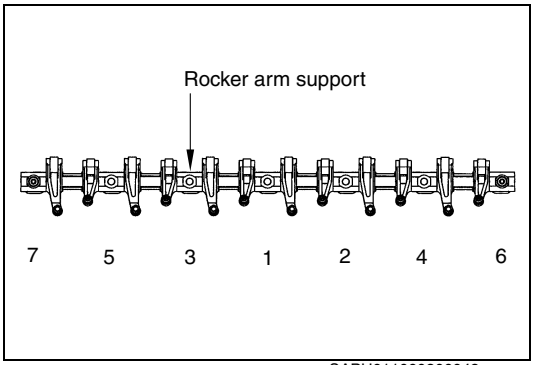

SAPH011060200042

(3) Apply engine oil to the seat surface and threads of the rocker arm support bolt and tighten the bolt by 1 or 2 threads by hand to set the position.

(4) Tighten the rocker arm support bolts gradually in the order as shown in the figure.
**Tightening Torque:**
**45 N·m {459 kgf·cm, 33.2 lbf·ft}**

(5) Tighten the injector clamp bolt to the specified torque.
**Tightening Torque:**
**25 N·m {250 kgf·cm, 18.1 lbf·ft}**

(6) Make sure that the rocker arm moves smoothly.

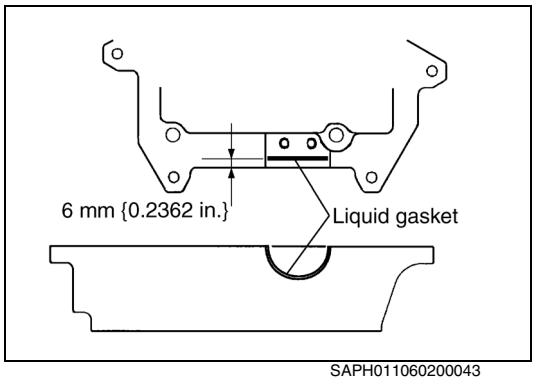

SAPH011060200043

**10. INSTALL THE HEAD COVER.**

(1) Remove the camshaft housing plugs at the front and rear ends of the camshaft housing.

**NOTICE**

**Do not remove the plug except when there is oil leakage from plug.**

(2) Remove the liquid gasket from camshaft housing plugs and camshaft housing completely.

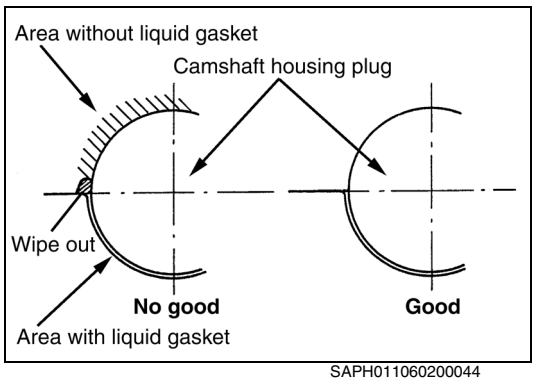

SAPH011060200044

(3) Apply liquid gasket to the front and rear half circles of the camshaft housing.

**NOTICE**

**Wipe out excess liquid gasket completely.**

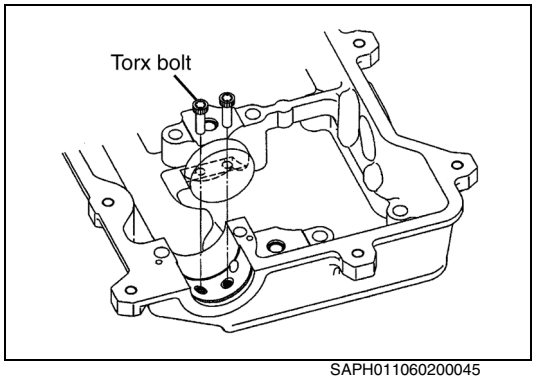

SAPH011060200045

(4) Install the camshaft housing plug to camshaft housing with torx bolt.
**Tightening Torque:**
**6 N·m {60 kgf·cm, 4.3 lbf·ft}**

**NOTICE**

**Make sure that the camshaft housing plug is installed with no tilt.**

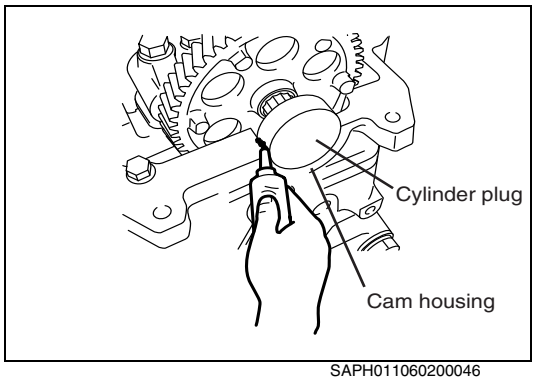

SAPH011060200046

(5) Install the head cover gasket into the gasket groove at the head cover lower surface.

**NOTICE**

**Make sure that there are no foreign particles (including liquid gasket), or oil on the gasket grooves of the head cover, gasket or cam housing upper surface nor damage to them.**

(6) Apply liquid gasket to plug corner at the front and rear ends of the cam housing before installing the head cover.

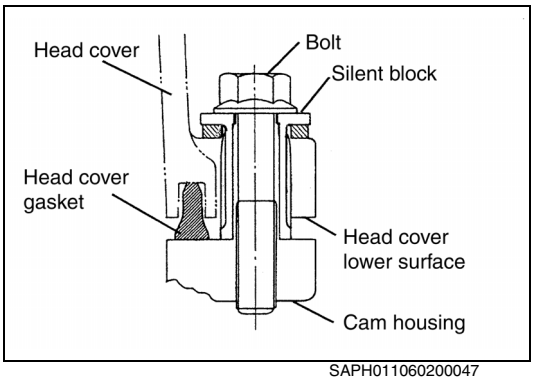

SAPH011060200047

(7) Insert the silent block from the head cover upper surface.
(8) Tighten the bolt through the silent block to the specified torque below and fix the head cover on the cam housing.
**Tightening Torque:**
**28.5 N·m {290 kgf·cm, 21 lbf·ft}**

# INSPECTION AND REPAIR

EN0110602H300001

Unit: mm {in.}

| Inspection item | | Standard | Limit | Remedy | Inspection procedure |
|---|---|---|---|---|---|
| Camshaft journal outside diameter | | 40 {1.5748} | 39.85 {1.5689} | Replace camshaft. | Measure 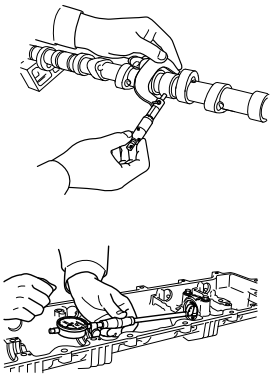 |
| Camshaft bearing inside diameter | | 40 {1.5748} | 40.15 {1.5807} | Replace cam bearing. | |
| Clearance between camshaft journal and camshaft bearing | | 0.020-0.063 (0.0008-0.0024) | — | Replace camshaft and/or cam bearing. |  |
| Camshaft end play | | 0.100-0.178 (0.0040-0.0070) | — | Replace camshaft. | Measure 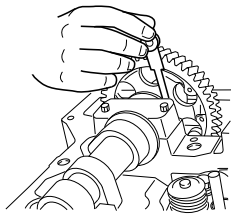 |
| Cam height | IN | 49.967-50.167 {1.9672-1.9751} | — | Replace camshaft. | Measure 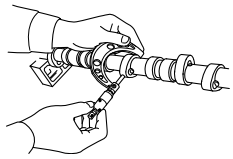 |
| | EX | 52.004-52.204 {2.0474-2.0553} | — | | |
| Camshaft deflection | | 0.04 {0.0016} | 0.1 {0.0039} | Replace camshaft. | Measure 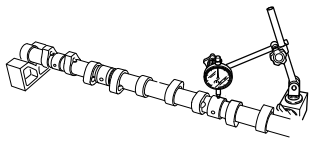 |
| Rocker arm bushing inside diameter | | 22 {0.866} | 22.08 {0.8693} | Replace rocker arm. | Measure 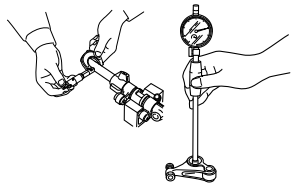 |
| Rocker shaft outside diameter | | 22 {0.866} | 21.92 {0.8630} | Replace rocker shaft. | |
| Clearance between rocker shaft and rocker arm bushing | | 0.030-0.101 {0.0012-0.0039} | 0.15 {0.0059} | Replace rocker arm and/or rocker shaft. | |

| Inspection item | | Standard | Limit | Remedy | Inspection procedure |
|---|---|---|---|---|---|
| Intake valve | Stem outside diameter | 7 {0.2756} | 6.92 {0.2724} | Replace the valve. | Measure 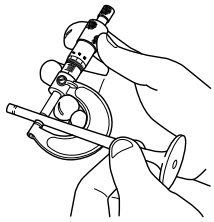 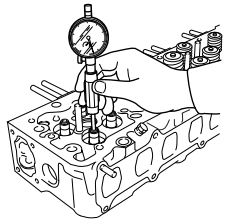 |
| | Guide inside diameter | 7 {0.2756} | 7.04 {0.2772} | Replace the valve guide. | |
| | Clearance | 0.023-0.058 {0.0010-0.0022} | 0.12 {0.0047} | Replace the valve and/or valve guide. | |
| Exhaust valve | Stem outside diameter | 7 {0.2756} | 6.85 {0.2697} | Replace the valve. | |
| | Guide inside diameter | 7 {0.2756} | 7.04 {0.2772} | Replace the valve guide. | |
| | Clearance | 0.050-0.083 {0.0020-0.0032} | 0.15 {0.0059} | Replace the valve and/or valve guide. | |
| Valve sink | IN | 0.55-0.85 {0.0217-0.0334} | 1.1 {0.0433} | Replace the valve and valve seat. | Measure 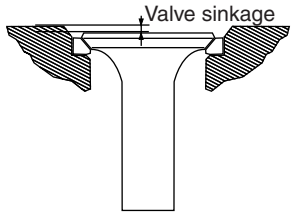  |
| | EX | 1.15-1.45 {0.0453-0.0570} | 1.7 {0.0669} | Replace the valve and valve seat. | |
| Valve seat angle | IN | 30° | 30°-30°35' | Resurface the valve and/or valve seat. | Measure 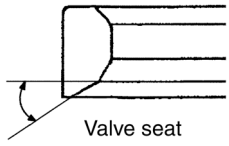  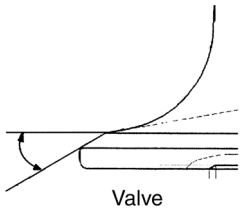  |
| | EX | 45° | 45°-45°30' | | |
| Valve face angle | IN | 30° | 29°30'-30° | | |
| | EX | 45° | 44°30'-45° | | |

| Inspection item | | Standard | Limit | Remedy | Inspection procedure |
|---|---|---|---|---|---|
| Outer valve spring | Setting load | 314 N {32.0 kgf, 70.5 lbf} at 46.8 {1.843} | 291.8 N {29.8 kgf, 65.6 lbf} at 46.8 {1.843} | Replace. | Measure 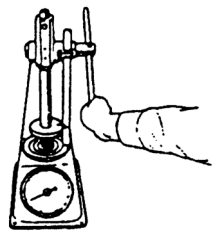 Setting load 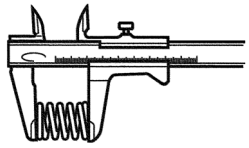 Free length 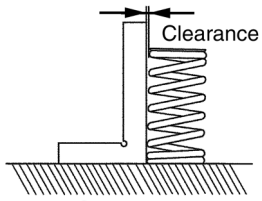  Squareness |
| | Free length (reference value) | 75.7 {2.980} | 72.7 {2.862} | Replace. | |
| | Squareness | — | 2.0 {0.0787} | Replace. | |
| Inner valve spring | Setting load | 129 N {13.2 kgf, 29.1 lbf} at 44.8 {1.764} | 119.5 N {12.2 kgf, 26.9 lbf} at 44.8 {1.764} | Replace. | |
| | Free length (reference value) | 64.6 {2.543} | 61.6 {2.425} | Replace. | |
| | Squareness | — | 2.0 {0.0787} | Replace. | |
| Wear and damage of valve spring seat upper and lower | | — | — | Replace. | Visual check 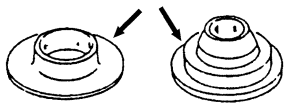 |
| Nozzle protrusion | | 2.45-2.95 {0.0965-0.1161} | — | Replace nozzle seat. | Measure 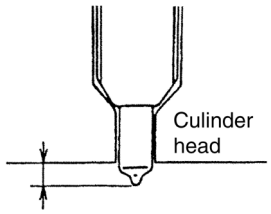  |
| Cylinder head lower surface flatness | | 0.06 or less {0.0024 or less} for longitudinal direction | 0.20 {0.0078} | Replace. NOTICE: Do not grind for repair. | Measure 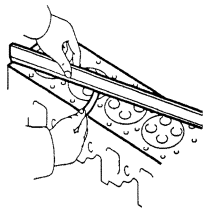 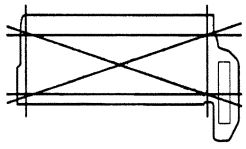 |
| | | 0.03 or less {0.0012 or less} for lateral direction | | | |

| Inspection item | Standard | Limit | Remedy | Inspection procedure |
|---|---|---|---|---|
| Cracks or damage to cylinder head (Dye penetrant check) | — | — | Replace. | Visual check 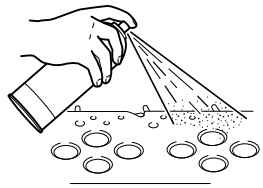 |
| Contact of valve (Use of Red lead marking compound) | Entire periphery of valve head evenly in contact | — | Matches valve. | Visual check 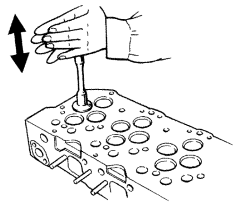 |
| Cam idle gear shaft outside diameter | 34 {1.3386} | — | — | Measure 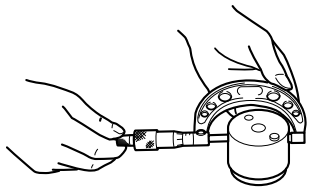 |
| Cam idle gear shaft bushing inside diameter | 34 {1.3386} | — | — | |
| Clearance between cam idle gear shaft and cam idle gear bushing | 0.025-0.075 {0.0010-0.0029} | 0.2 {0.0078} | Replace idle gear shaft and/or idle gear. | 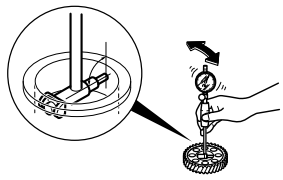 |

# CRANKSHAFT FRONT END

## COMPONENT LOCATOR

EN0110602D100002

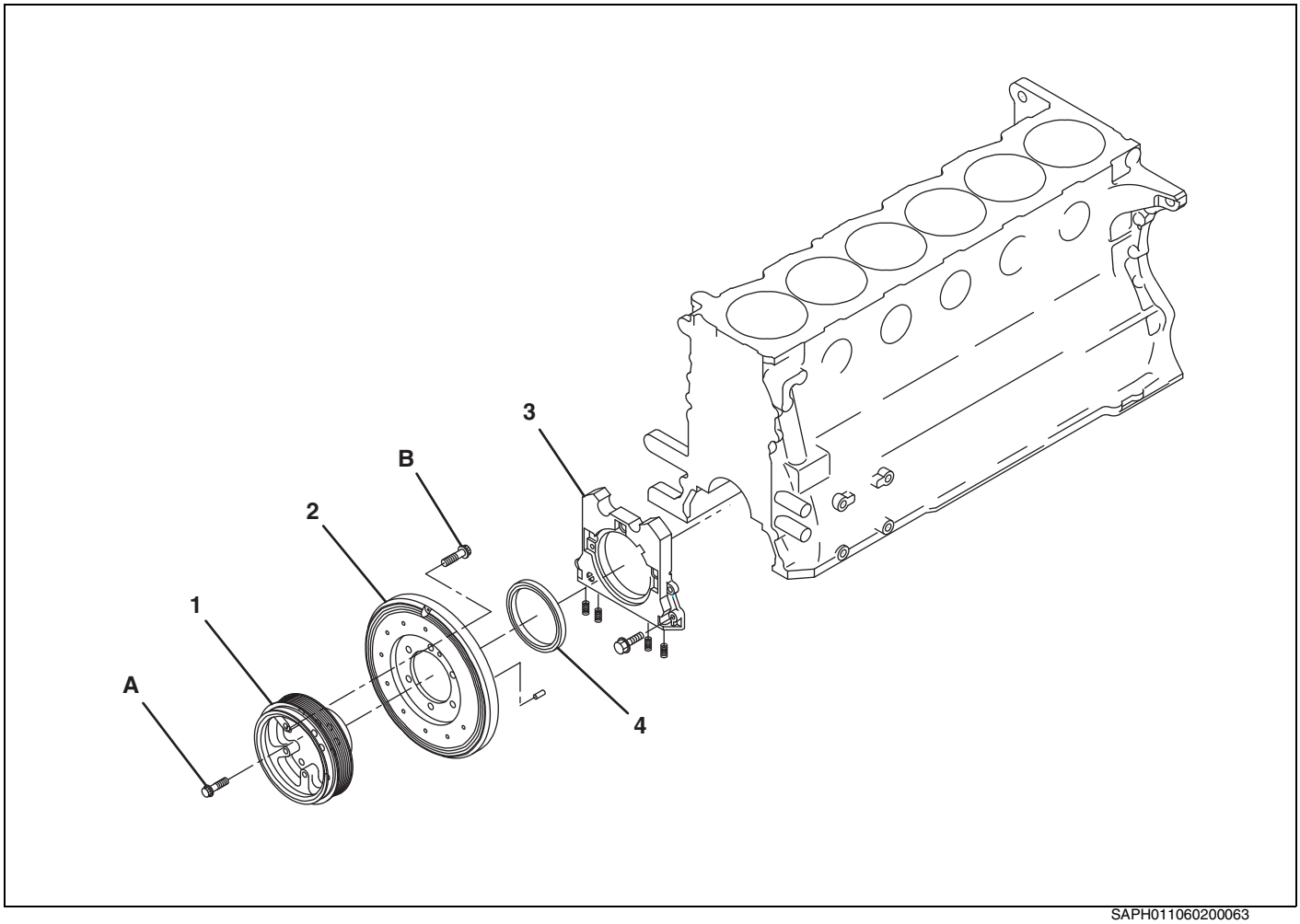


SAPH011060200063

| | | | |
|---|---|---|---|
| 1 | Crankshaft pulley | 3 | Oil seal retainer |
| 2 | Torsional damper | 4 | Crankshaft oil seal |

**Tightening torque** **Unit: N·m {kgf·cm, lbf·ft}**

| | | | |
|---|---|---|---|
| A | 118 {1,200, 86.8}# | B | 108 {1,100, 79.6}# |

**#=Apply oil to the threads and seat surfaces before tightening.**

# SPECIAL TOOL

EN0110602K100002

Prior to starting an engine overhaul, it is necessary to have these special tools.

| Illustration | Part number | Tool name | Remarks |
|---|---|---|---|
| 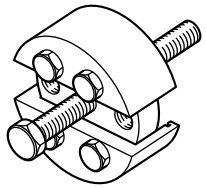 | S0942-01731 | OIL SEAL PULLER | |
| 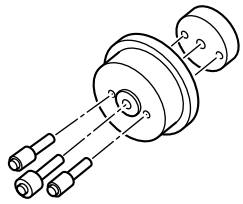 | S0940-71030 | OIL SEAL PRESS | |

# OVERHAUL

EN0110602H200002

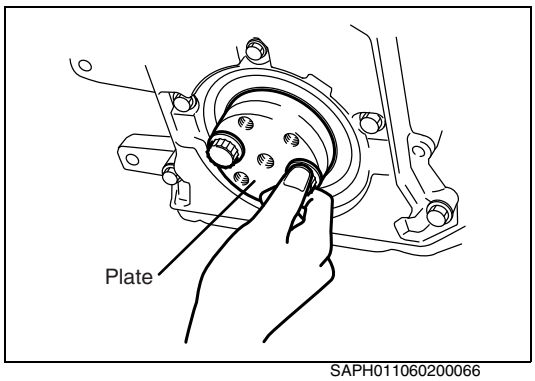

SAPH011060200066

## IMPORTANT POINTS - REPLACEMENT

**1. REMOVE THE CRANKSHAFT FRONT OIL SEAL.**
**SST: Oil seal puller (S0942-01731)**

(1) Place the plate at the crankshaft end using the crankshaft pulley bolts.

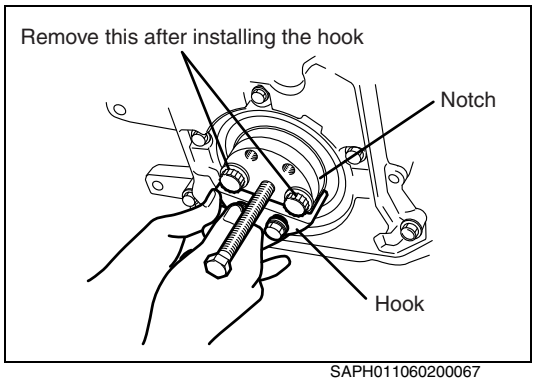

SAPH011060200067

(2) Engage the hook with the oil seal notch and install the hook using the bolt supplied.
(3) Remove the installed bolt in step (1).

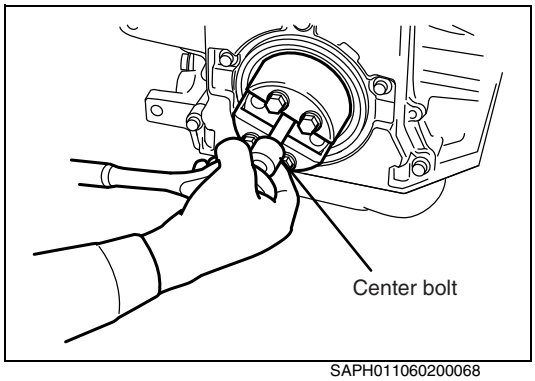

SAPH011060200068

(4) Install the center bolt and tighten it to remove the oil seal.

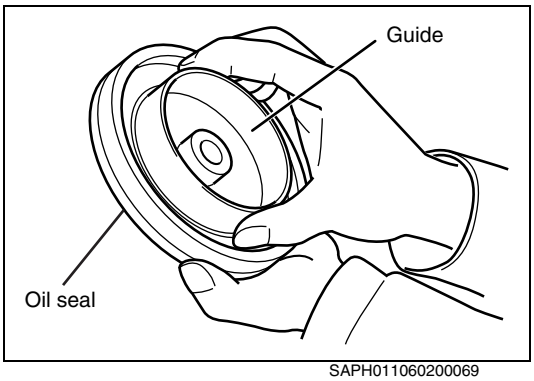

SAPH011060200069

**2. INSTALL THE CRANKSHAFT FRONT OIL SEAL.**
**SST: Oil seal press (S0940-71030)**

(1) Clean the edges and surface of the crankshaft and the special tools.
(2) Insert a new crankshaft oil seal into the guide of the oil seal press.

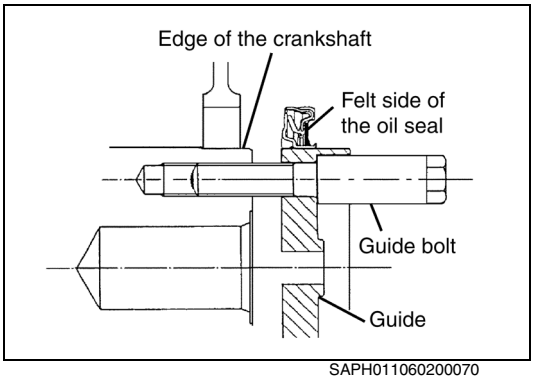

SAPH011060200070

**NOTICE**
**Pay attention to the orientation of the crankshaft oil seal (The felt side should face the outside of the cylinder block).**

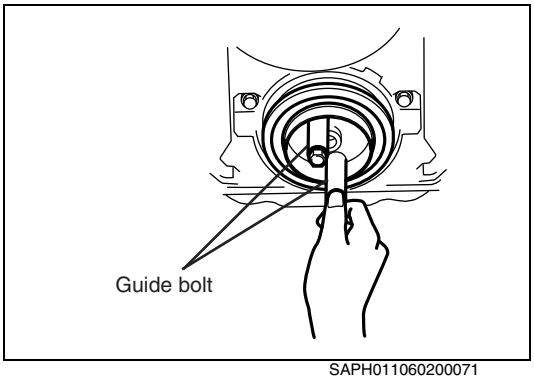

SAPH011060200071

(3) Apply a little engine oil to the seal portion of the crankshaft oil seal.
(4) Attach the oil seal press guide with the new crankshaft oil seal onto the crankshaft using the attached guide bolt.

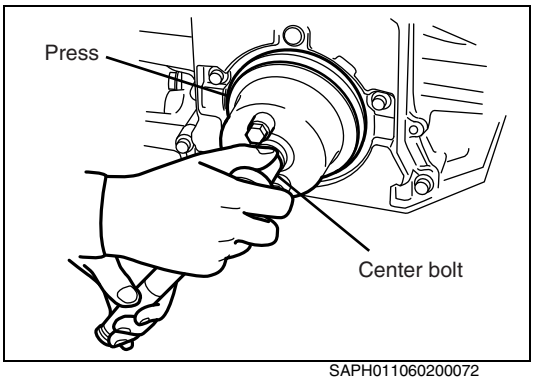

SAPH011060200072

(5) Insert the oil seal press by adjusting the oil seal press hole to the guide bolt.
(6) Press the crankshaft oil seal inside by attaching the accompanying center bolt onto the oil seal press and tightening it until it stops.

# FLYWHEEL AND FLYWHEEL HOUSING

## COMPONENT LOCATOR

EN0110602D100003

Example

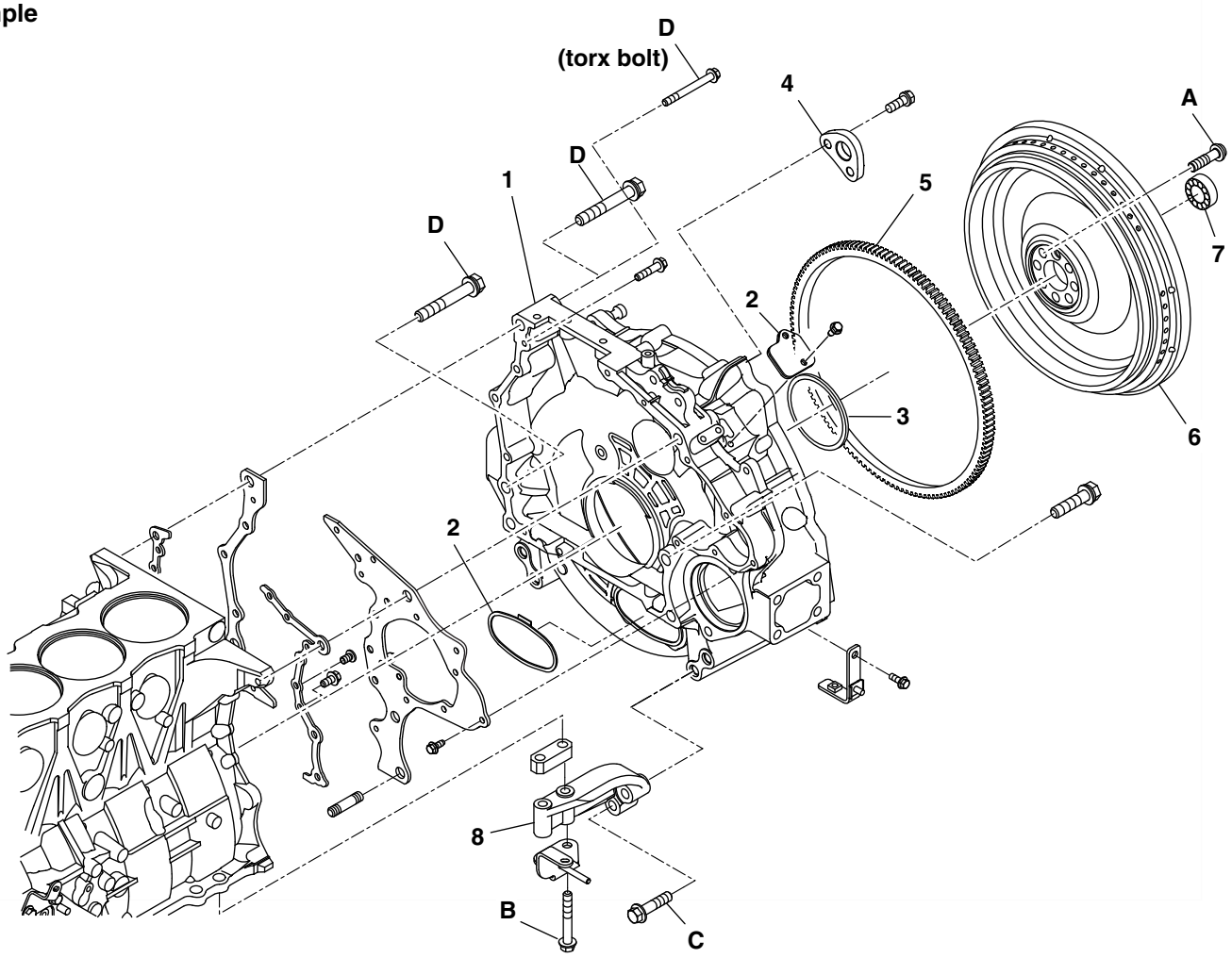


SAPH011060200073

| | | | |
|---|---|---|---|
| 1 | Flywheel housing | 5 | Ring gear |
| 2 | Dust cover | 6 | Flywheel |
| 3 | Crankshaft oil seal | 7 | Pilot bearing |
| 4 | Hanger bracket | 8 | Stay |

Tightening torque — Unit: N·m {kgf·cm, lbf·ft}

| | | | |
|---|---|---|---|
| A | 186 {1,900, 137.4}#○ | D | M8: 28.5 {290, 21} |
| B | 97 {990, 71.6} | D | M8 Torx bolt: 36 {370, 26.8} |
| C | 171.5 {1,750, 126.6} | D | M10: 55 {560, 40.5} |
| | | D | M16: 196 {2,000, 145} |

#=Apply oil to the threads and seat surface before tightening.
○=Tighten the bolt to the specified torque, then loosen it. Tighten to the specified torque again.

# SPECIAL TOOL

EN0110602K100003

Prior to starting an engine overhaul, it is necessary to have these special tools.

| Illustration | Part number | Tool name | Remarks |
|---|---|---|---|
| 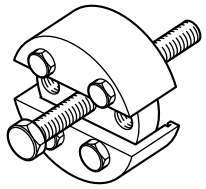 | S0942-01742 | REAR OIL SEAL PULLER | |
| 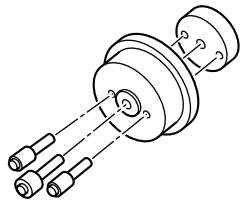 | S0940-71040 | OIL SEAL PRESS | |
| 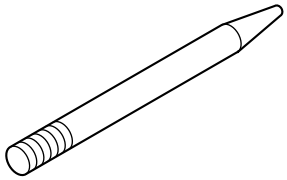 | S0948-11340 | GUIDE BAR | |

# OVERHAUL

EN0110602H200003

## IMPORTANT POINT - DISASSEMBLY

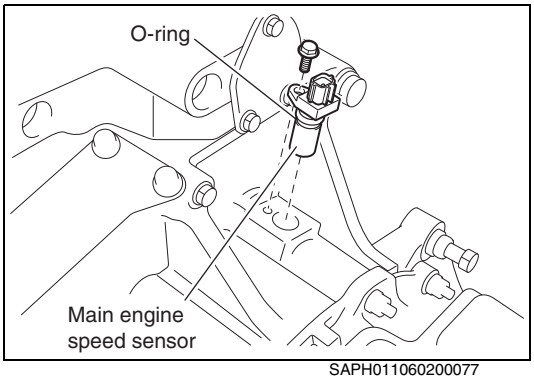

SAPH011060200077

**1. REMOVE THE FLYWHEEL ASSY.**

(1) Remove the main engine speed sensor from the flywheel housing.

**NOTICE**

**When dismounting and remounting the flywheel. Remove the main engine speed sensor. If not removed, it will result in damage of the sensor.**

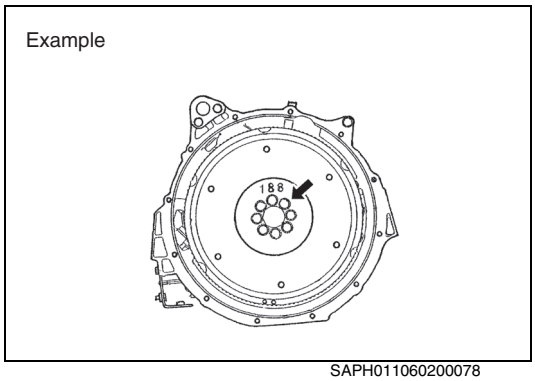

SAPH011060200078

(2) Remove the 8 bolts of the flywheel assy.

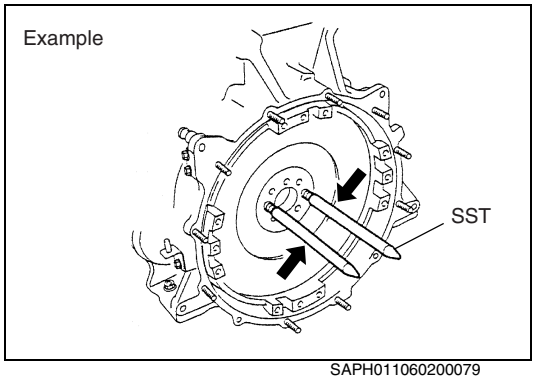

SAPH011060200079

(3) Install the special tool, remove the flywheel assy.
**SST: Guide bar (S0948-11340)**

**⚠ WARNING**
**Be careful not to drop the flywheel on your foot when removing it, because it is very heavy.**

## IMPORTANT POINTS - REPLACEMENT

**1. REMOVE THE CRANKSHAFT REAR OIL SEAL.**
**SST: Oil seal puller (S0942-01742)**

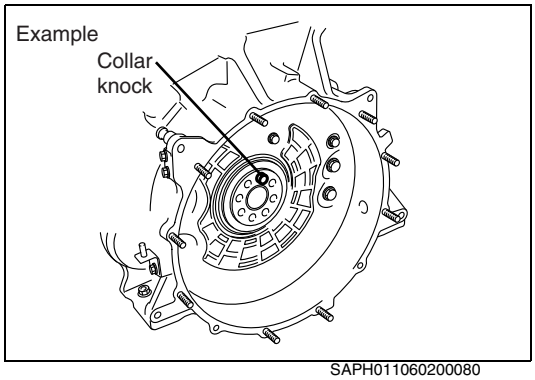

SAPH011060200080

(1) Place the plate at the crankshaft end using the flywheel bolts.
**NOTICE**
**Match the plate hole to the crankshaft collar knock part.**

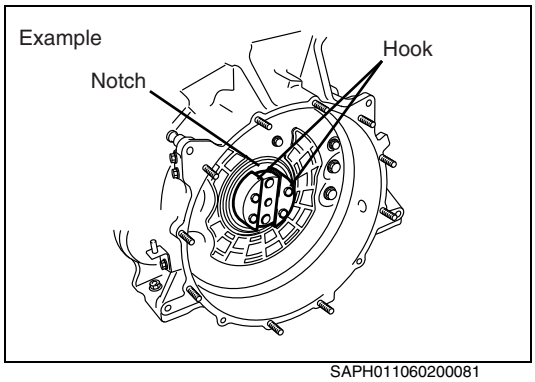

SAPH011060200081

(2) Engage the hook with the oil seal notch and install the hook using the bolt supplied.
(3) Remove the installed flywheel bolts in step (1).

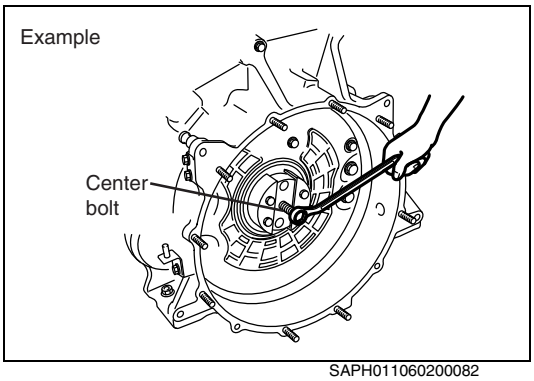

SAPH011060200082

(4) Install the center bolt and tighten it to remove the oil seal.

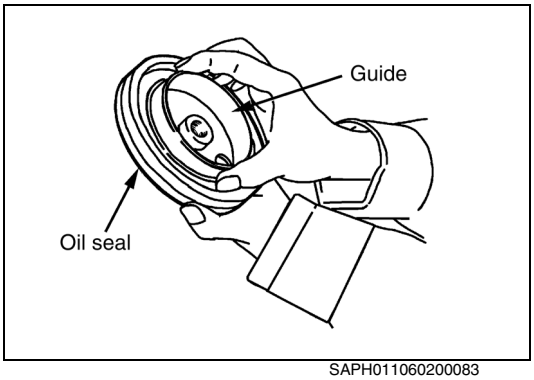

SAPH011060200083

**2. INSTALL THE CRANKSHAFT REAR OIL SEAL.**
**SST: Oil seal press (S0940-71040)**

(1) Clean the edges and surface of the crankshaft and the special tools.
(2) Insert a new crankshaft oil seal into the guide of the oil seal press.

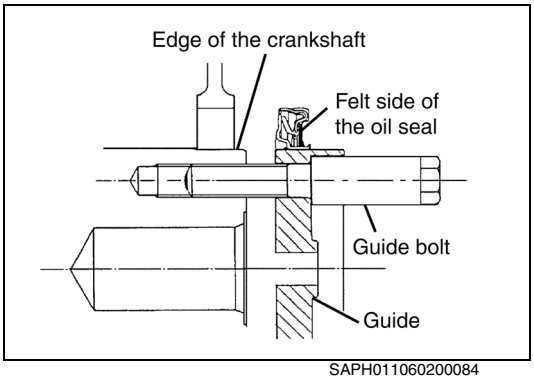

SAPH011060200084

**NOTICE**
**Pay attention to the orientation of the crankshaft oil seal (The felt side should face the outside of the cylinder block).**

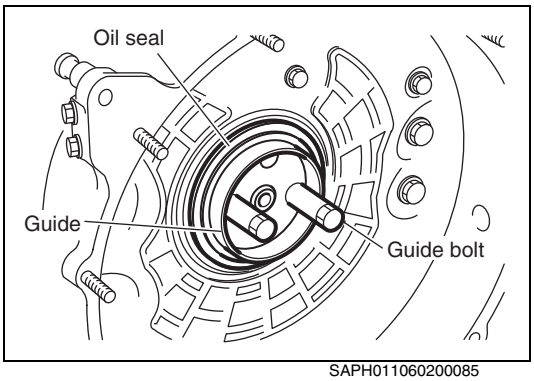

SAPH011060200085

(3) Apply a little engine oil to the seal portion of the crankshaft oil seal.
(4) Attach the oil seal press guide with the new crankshaft oil seal onto the crankshaft using the attached guide bolt.

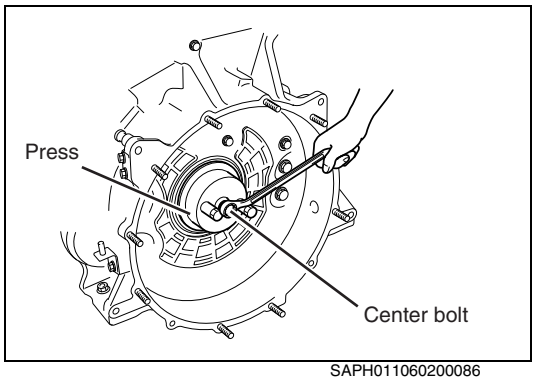

SAPH011060200086

(5) Insert the oil seal press by adjusting the oil seal press hole to the guide bolt.
(6) Press the crankshaft oil seal inside by attaching the accompanying center bolt onto the oil seal press and tightening it until it stops.

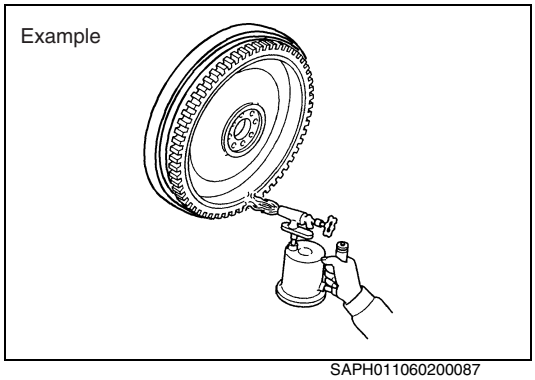

SAPH011060200087

**3. REPLACE THE FLYWHEEL RING GEAR.**
(1) Heat the ring gear evenly to about 200°C {392°F} with a torch. Tap the ring gear periphery lightly using a cushion bar to remove the gear.

**⚠ WARNING**
**Never touch the heated ring gear or flywheel with your bare hand. This can result in personal injury.**

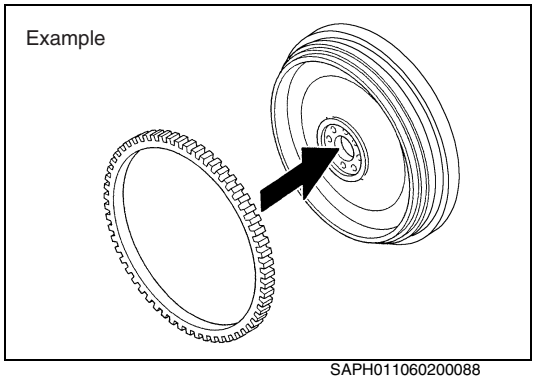

SAPH011060200088

(2) Heat the ring gear evenly to about 200°C {392°F} with a torch. Insert the ring gear into the flywheel so that the chamfered side is upward.

**⚠ WARNING**
**Never touch the heated ring gear or flywheel with your bare hand. This can result in personal injury.**

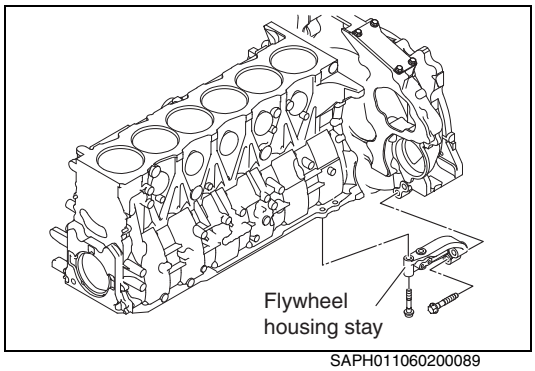

SAPH011060200089

**4. REPLACE THE FLYWHEEL HOUSING.**
(1) Removing the flywheel housing.
a. Remove the flywheel housing stay.

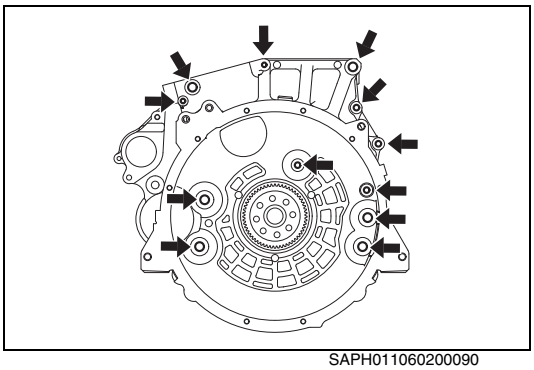
SAPH011060200090

b. Unfasten the bolts to remove the flywheel housing.

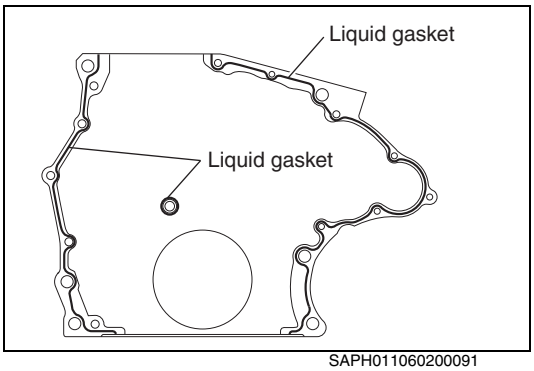

SAPH011060200091

(2) Mounting the flywheel housing.
   a. Using the scraper, remove dirt on the joint surfaces of the axle housing and differential carrier assembly.
   b. Apply a liquid gasket to the flywheel housing as shown in the figure.

**NOTICE**

- **Apply it seamlessly.**
- **Apply the liquid gasket with 1.5 to 2.5 mm width.**
- **Mount the case within 20 minutes after applying the liquid gasket.**

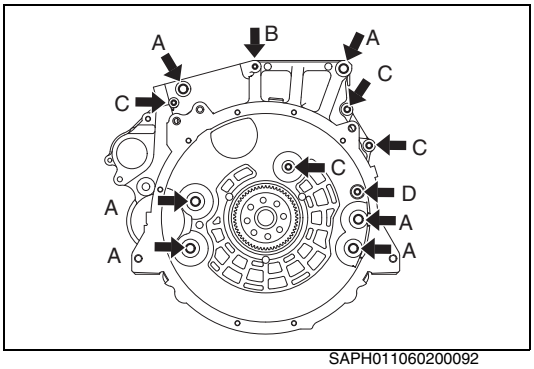

SAPH011060200092

c. Mount the rear engine mounting to the flywheel housing with bolts.
   **Tightening torque:**
   **196 N·m {2,000 kgf·cm, 145 lbf·ft} (A)**
   **36 N·m {370 kgf·cm, 26.8 lbf·ft} (B)**
   **55 N·m {560 kgf·cm, 40.5 lbf·ft} (C)**
   **55 N·m {560 kgf·cm, 40.5 lbf·ft} (D)**

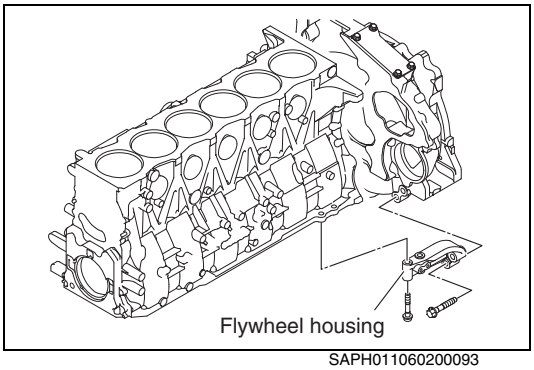

SAPH011060200093

d. Mount the flywheel housing stay.
   **Tightening torque:**
   **97 N·m {990 kgf·cm, 71.6 lbf·ft} (M12)**
   **171.5 N·m {1,750 kgf·cm, 126.6 lbf·ft} (M14)**

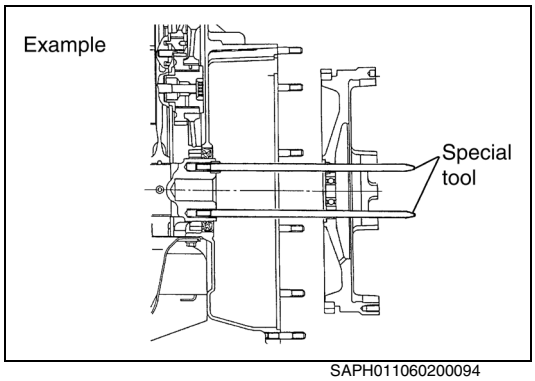

SAPH011060200094

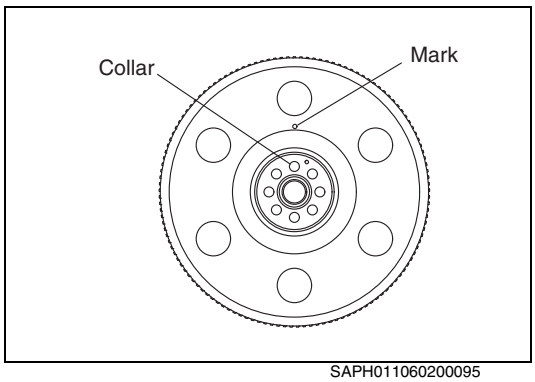

SAPH011060200095

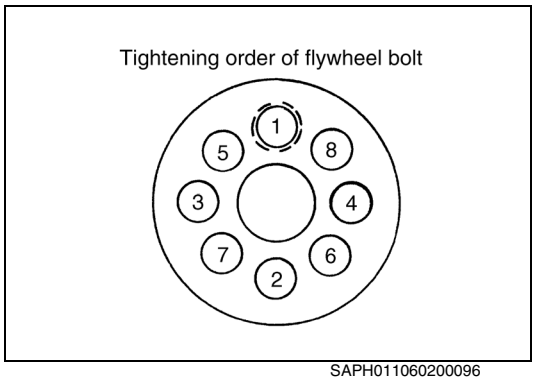

SAPH011060200096

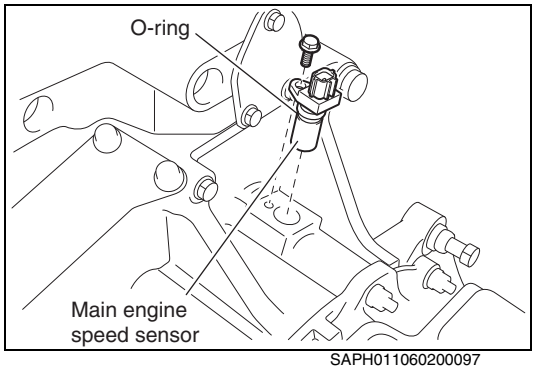

SAPH011060200097

## IMPORTANT POINT - ASSEMBLY

**1. INSTALL THE FLYWHEEL.**

(1) Make sure that there are no burns or dirt on the contact surface or in the threaded holes of the crankshaft or flywheel. Install the special tool onto the crankshaft.
**SST: Guide bar (S0948-11340)**

**NOTICE**
**Place one guide bar at the collar knock and another at the opposite side of the collar knock.**

(2) Insert the flywheel slowly until it contacts the collar knock to prevent impact on the guide bar. Adjust the position, then insert the flywheel completely.

**⚠ WARNING**
**Be careful not to drop the flywheel on your foot when removing it, because it is very heavy.**

**NOTICE**
**Align the "O" mark on the flywheel and crankshaft collar knock-pin.**

(3) Apply clean engine oil to the threads of the flywheel bolt and the flywheel bolt seat. Be sure to tighten the flywheel bolts (6 pieces) with a low-torque impact wrench.
(4) Pull out the guide bar and tighten the remaining two flywheel bolts provisionally as in step (3).
(5) Tighten the flywheel in the order shown in the figure to the specified torque below.
**Tightening Torque:**
**186 N·m {1,900 kgf·cm, 137.4 lbf·ft}**

(6) Loosen all bolts and tighten them again to the specified torque.

(7) Install the main engine speed sensor.
**Tightening Torque:**
**10 N·m {102 kgf·cm, 7.3 lbf·ft}**

# INSPECTION AND REPAIR

EN0110602H300002

**Unit: mm {in.}**

| Inspection item | | Standard | Limit | Remedy | Inspection procedure |
|---|---|---|---|---|---|
| **Flywheel surface deflection** | | **—** | **0.15 {0.0059}** | **Repair.** | **Measure** 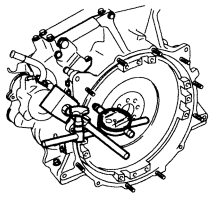 |
| **Flywheel thickness (Dimension A)** | **EATON SAS1401 SAS1402 MD DM series (Diameter 350 mm {14 in.})** | **43.5 {1.7126}** | **42.5 {1.6732}** | **Repair.** | **Measure** 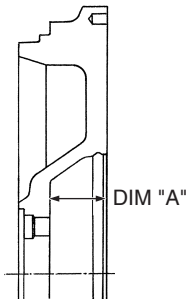  |
| **Flywheel surface crank on heat spot** | | **—** | **—** | **Repair.** | **Visual check** |

# TIMING GEAR

## COMPONENT LOCATOR

EN0110602D100004

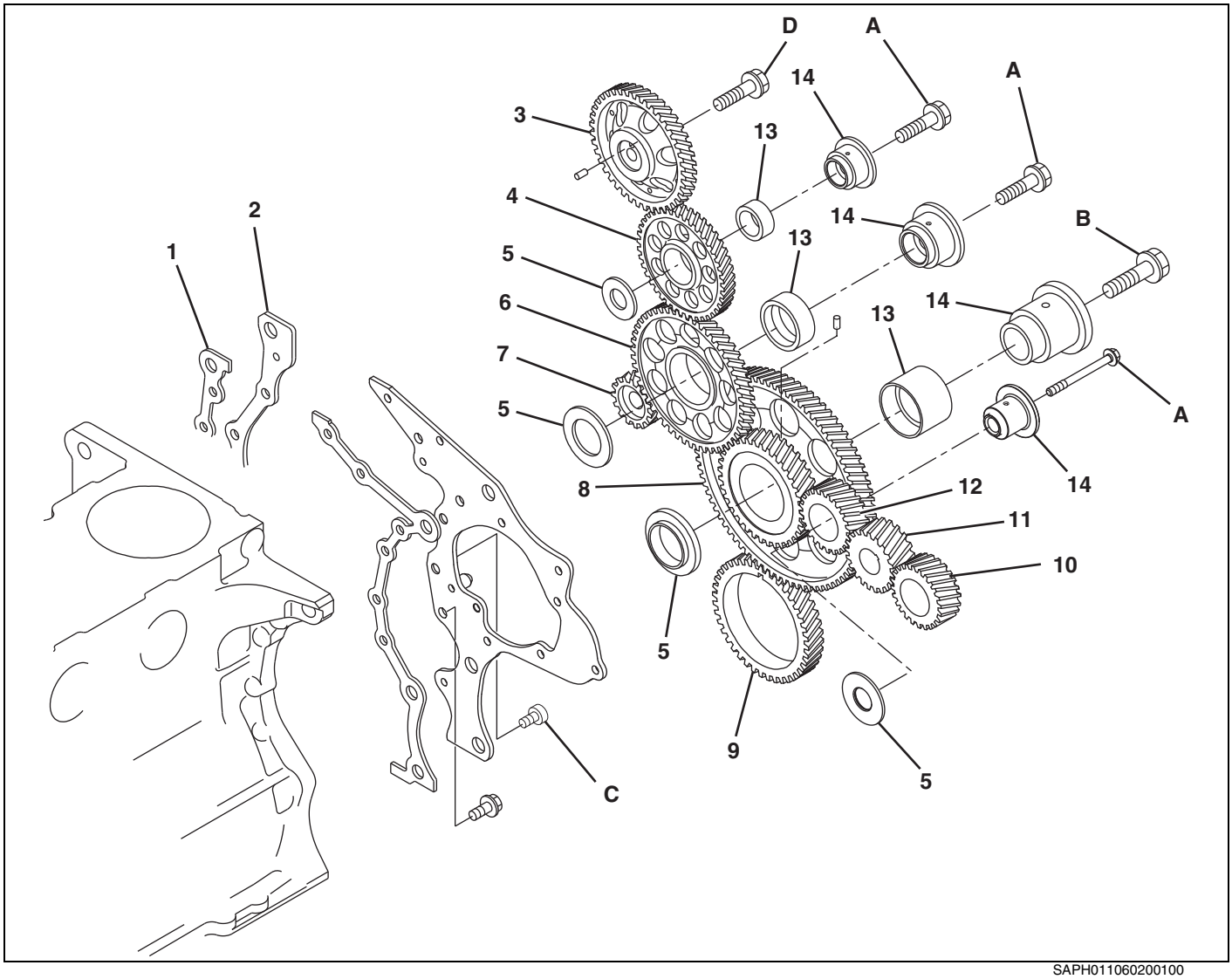


SAPH011060200100

| | | | |
|---|---|---|---|
| 1 | Gasket | 8 | Main idle gear |
| 2 | Rear end plate | 9 | Crankshaft gear |
| 3 | Camshaft gear | 10 | Power steering pump drive gear |
| 4 | Cam idle gear | 11 | Air compressor drive gear |
| 5 | Idle gear thrust plate | 12 | Air compressor idle gear |
| 6 | Sub-idle gear | 13 | Idle gear bushing |
| 7 | Oil pump gear | 14 | Idle gear shaft |

**Tightening torque** **Unit: N·m {kgf·cm, lbf·ft}**

| | | | |
|---|---|---|---|
| A | 108 {1,100, 79.6}# | C | 55 {560, 41} Application of lock sealant |
| B | 172 {1,750, 127}# | D | 59 {600, 43}+90°# |

**#=Apply oil to the threads and seat surfaces before tightening.**

# SPECIAL TOOL

EN0110602K100004

Prior to starting an engine overhaul, it is necessary to have these special tools.

| Illustration | Part number | Tool name | Remarks |
|---|---|---|---|
| 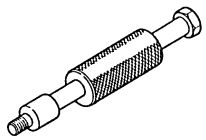 | S0942-01100 | SLIDING HAMMER | For MAIN IDLE GEAR |
| 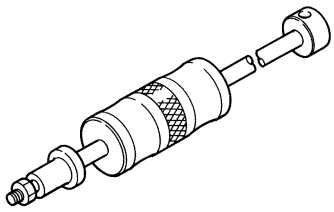 | S0942-01442 | SLIDING HAMMER | For SUB AND CAM IDLE GEAR |
| 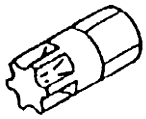 | S0941-11300 | SOCKET WRENCH | For TORX BOLT |

# OVERHAUL

EN0110602H200004

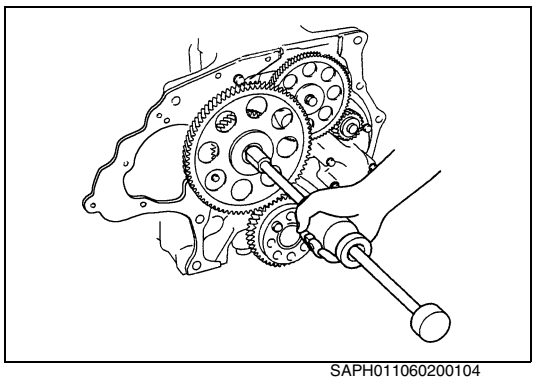

SAPH011060200104

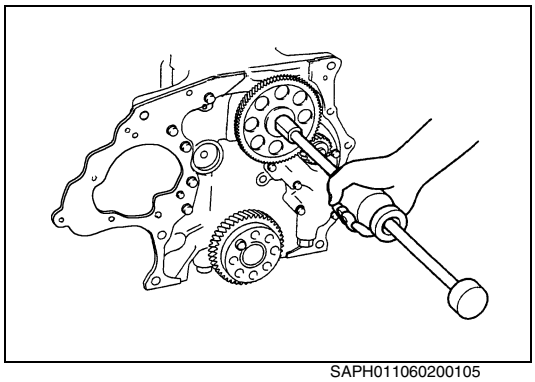

SAPH011060200105

## IMPORTANT POINT - DISASSEMBLY

**1. REMOVE THE IDLE GEAR SHAFT.**

(1) Remove the idle gear shaft using the special tool.
**SST:**
**Sliding hammer (for main idle gear) (S0942-01100)**
**Sliding hammer (for sub and cam idle gear) (S0942-01442)**

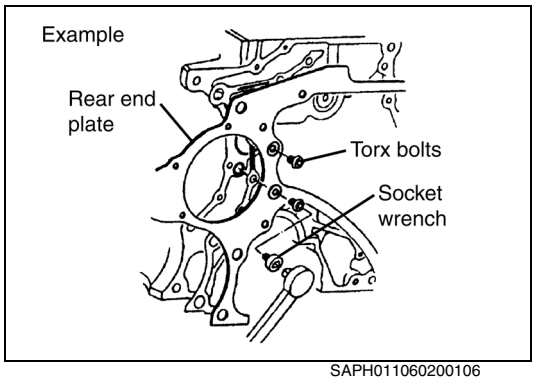


SAPH011060200106

## IMPORTANT POINTS - ASSEMBLY

**1. INSTALL THE REAR END PLATE.**

(1) Apply lock sealant (Nut Lock Super 5M or equivalent) to the threads of the torx bolts in the side of bearing holder case fitting (2 places) and tighten to the specified torque using the special tool.
**SST: Socket wrench (S0941-11300)**

**Tightening Torque:**
**55 N·m {560 kgf·cm, 41 lbf·ft}**

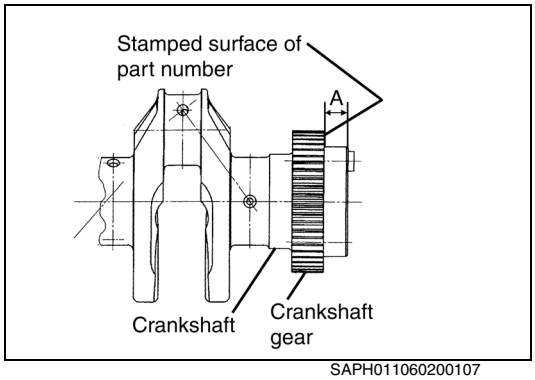


SAPH011060200107

**2. INSTALL THE CRANKSHAFT GEAR.**

(1) Heat the crankshaft gear in oil heated to 100°C -150°C {212°F-302°F}.

**⚠ WARNING**
**Never touch the heated gear with your bare hand. This can result in personal injury.**

(2) Align the crankshaft gear groove with crankshaft pin.
(3) Install the crankshaft gear onto the crankshaft as shown in the figure.
**Dimension A: 22 mm {0.866 in.}**

### 3. INSTALL THE IDLER GEAR SHAFT AND GEAR.

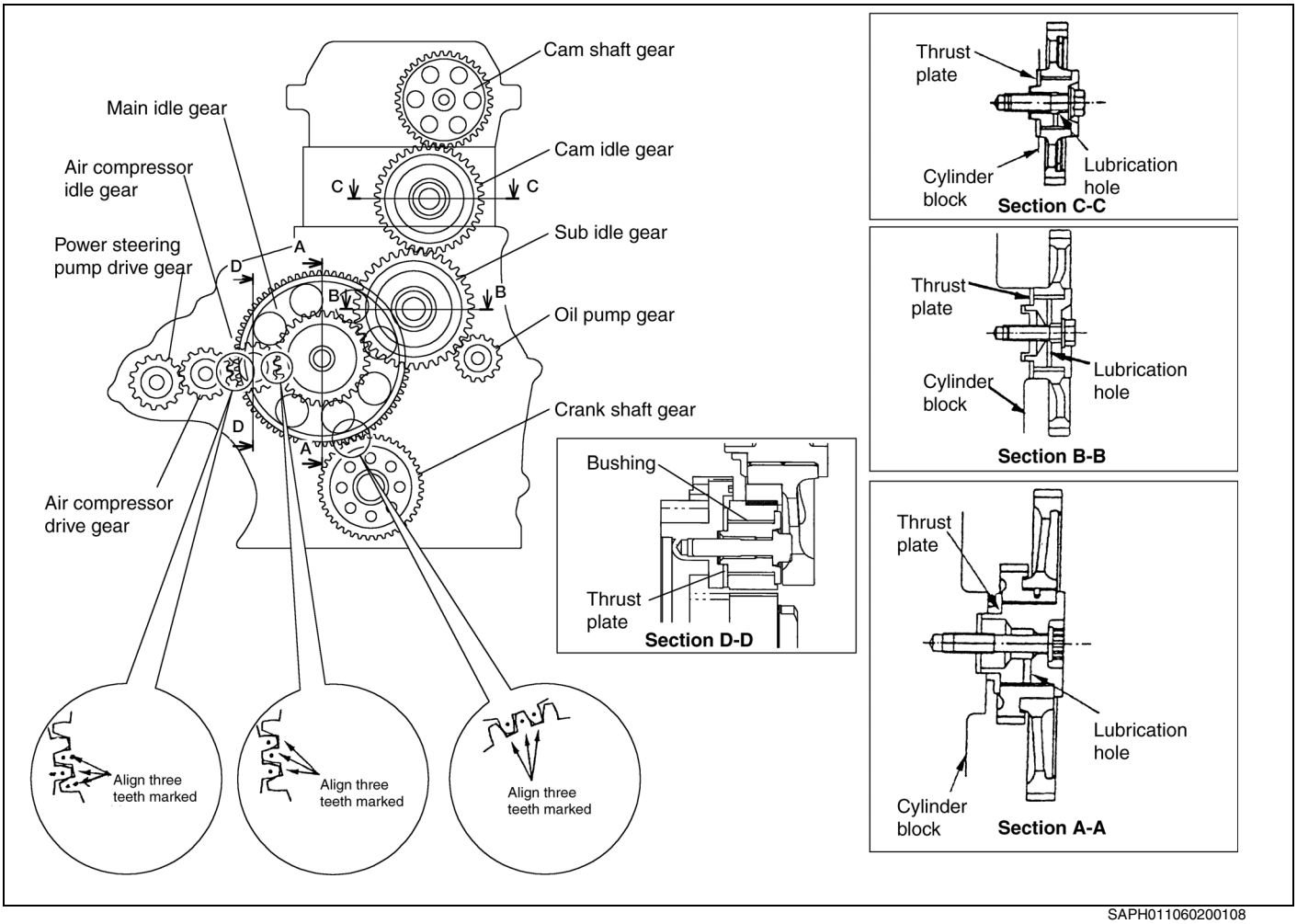


SAPH011060200108

**NOTICE**

- **Install each idle gear shaft through the thrust plate as shown in the figure so that the lubrication hole is downward.**
- **Adjust the timing of the main idle gear to align with the air compressor gear as shown in the figure.**

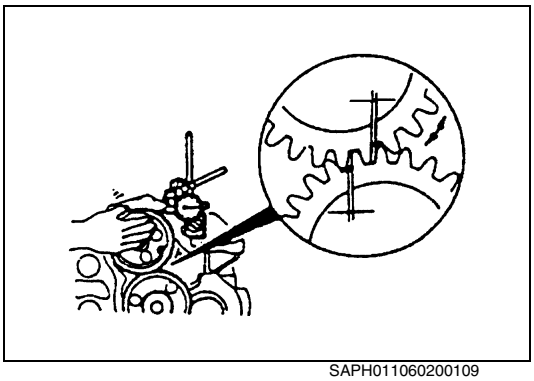

SAPH011060200109

### 4. MEASUREMENT OF GEAR BACKLASH.

(1) Measure the backlash between the gears with a dial gauge. (Refer to the table of "**INSPECTION AND REPAIR**")

**NOTICE**

- **Measure the backlash with the drive-side gear fixed.**
- **After measurement of the backlash, apply engine oil to each gear surface.**

# INSPECTION AND REPAIR

EN0110602H300003

Unit: mm {in.}

| Inspection item | | Standard | Limit | Remedy | Inspection procedure |
|---|---|---|---|---|---|
| Timing gear backlash | Crankshaft-Main idle | 0.030-0.167 {0.0012-0.0065} | 0.30 {0.0118} | Replace gear. | Measure 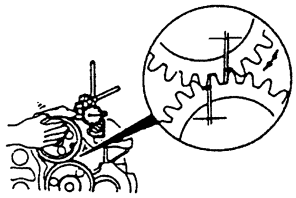 |
| | Main idle-Air compressor idle | 0.020-0.096 {0.0008-0.0038} | 0.10 {0.0039} | | |
| | Air compressor idle-Air compressor gear | 0.020-0.083 {0.0008-0.0033} | 0.10 {0.0039} | | |
| | Air compressor-Power steering pump | 0.030-0.134 {0.0012-0.0052} | 0.30 {0.0118} | | |
| | Main idle-Sub idle | 0.030-0.113 {0.0012-0.0044} | 0.30 {0.0118} | | |
| | Sub idle-Oil pump | 0.030-0.131 {0.0012-0.0052} | 0.30 {0.0118} | | |
| | Sub idle-Cam idle | 0.050-0.218 {0.0020-0.0085} | 0.30 {0.0118} | | |
| | Cam idle-Camshaft | 0.030-0.253 {0.0012-0.0099} | 0.30 {0.0118} | | |

| Inspection item | | Standard | Limit | Remedy | Inspection procedure |
|---|---|---|---|---|---|
| Main idle shaft | Shaft outside diameter | 57 {2.244} | — | — | Measure |
| | Bushing inside diameter | 57 {2.244} | — | — | |
| | Clearance | 0.030-0.090 {0.0012-0.0035} | 0.20 {0.0079} | Replace gear and/or shaft. | |
| | Gear width | 44 {1.732} | — | — | |
| | Shaft length | 44 {1.732} | — | — | |
| | End play | 0.114-0.160 {0.0045-0.0062} | 0.30 {0.0118} | Replace gear and/or shaft. | |
| Sub idle shaft | Shaft outside diameter | 50 {1.969} | — | — | |
| | Bushing inside diameter | 50 {1.969} | — | — | |
| | Clearance | 0.025-0.075 {0.0010-0.0029} | 0.20 {0.0079} | Replace gear and/or shaft. | |
| | Gear width | 22 {0.866} | — | — | |
| | Shaft length | 22 {0.866} | — | — | |
| | End play | 0.040-0.120 {0.0016-0.0047} | 0.30 {0.0118} | Replace gear and/or shaft. | |
| Cam idle shaft | Shaft outside diameter | 34 {1.339} | — | — | |
| | Bushing inside diameter | 34 {1.339} | — | — | |
| | Clearance | 0.025-0.075 {0.0010-0.0029} | 0.20 {0.0079} | Replace gear and/or shaft. | |
| | Gear width | 22 {0.866} | — | — | |
| | Shaft length | 22 {0.866} | — | — | |
| | End play | 0.040-0.120 {0.0016-0.0047} | 0.30 {0.0118} | Replace gear and/or shaft. | |
| Air compressor idle | Shaft outside diameter | 34 {1.339} | — | — | |
| | Bushing inside diameter | 34 {1.339} | — | — | |
| | Clearance | 0.025-0.057 {0.0010-0.0022} | 0.10 {0.0039} | Replace gear and/or shaft. | |
| | Gear width | 28.5 {1.1220} | — | — | |
| | Shaft length | 28.5 {1.1220} | — | — | |
| | End play | 0.160-0.220 {0.0063-0.0086} | 0.30 {0.0118} | Replace gear and/or shaft. | |

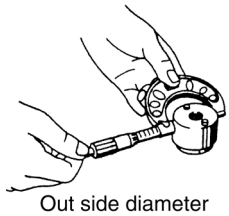
Out side diameter

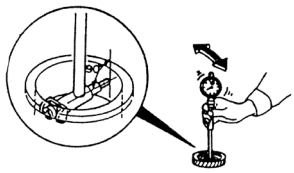
Inside diameter

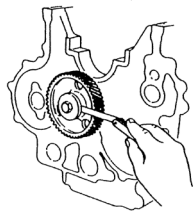
End play

# MAIN MOVING PARTS AND CYLINDER BLOCK

## COMPONENT LOCATOR

EN0110602D100005

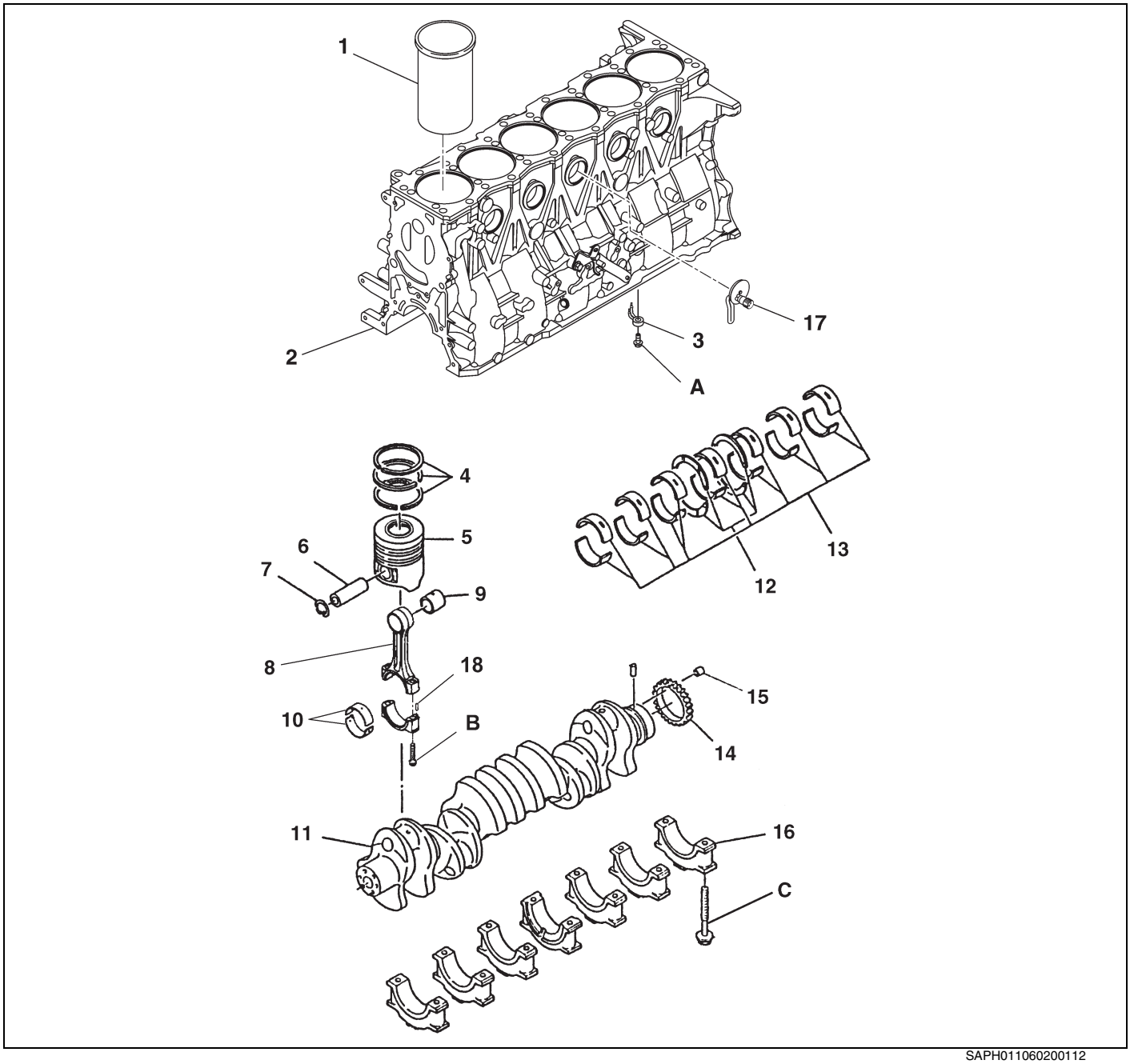


SAPH011060200112

| | | | |
|---|---|---|---|
| 1 | Cylinder liner | 10 | Connecting rod bearing |
| 2 | Cylinder block | 11 | Crankshaft |
| 3 | Piston cooling jet | 12 | Crankshaft thrust bearing |
| 4 | Piston ring | 13 | Crankshaft main bearing |
| 5 | Piston | 14 | Crankshaft gear |
| 6 | Piston pin | 15 | Collar knock |
| 7 | Retainer ring | 16 | Main bearing cap |
| 8 | Connecting rod | 17 | Block heater assy |
| 9 | Connecting rod bushing | 18 | Dowel pin |

**Tightening torque** **Unit: N·m {kgf·cm, lbf·ft}**

| | | | |
|---|---|---|---|
| **A** | **22 {220, 15.9}** | **C** | **69 {700, 51}+90°+45°#○** |
| **B** | **69 {700, 51}+90°+45°#** | | |

**#=Apply oil to the threads and seat surfaces before tightening.**
**○=Tighten the bolt to the specified torque, then loosen it. Tighten to the specified torque again.**

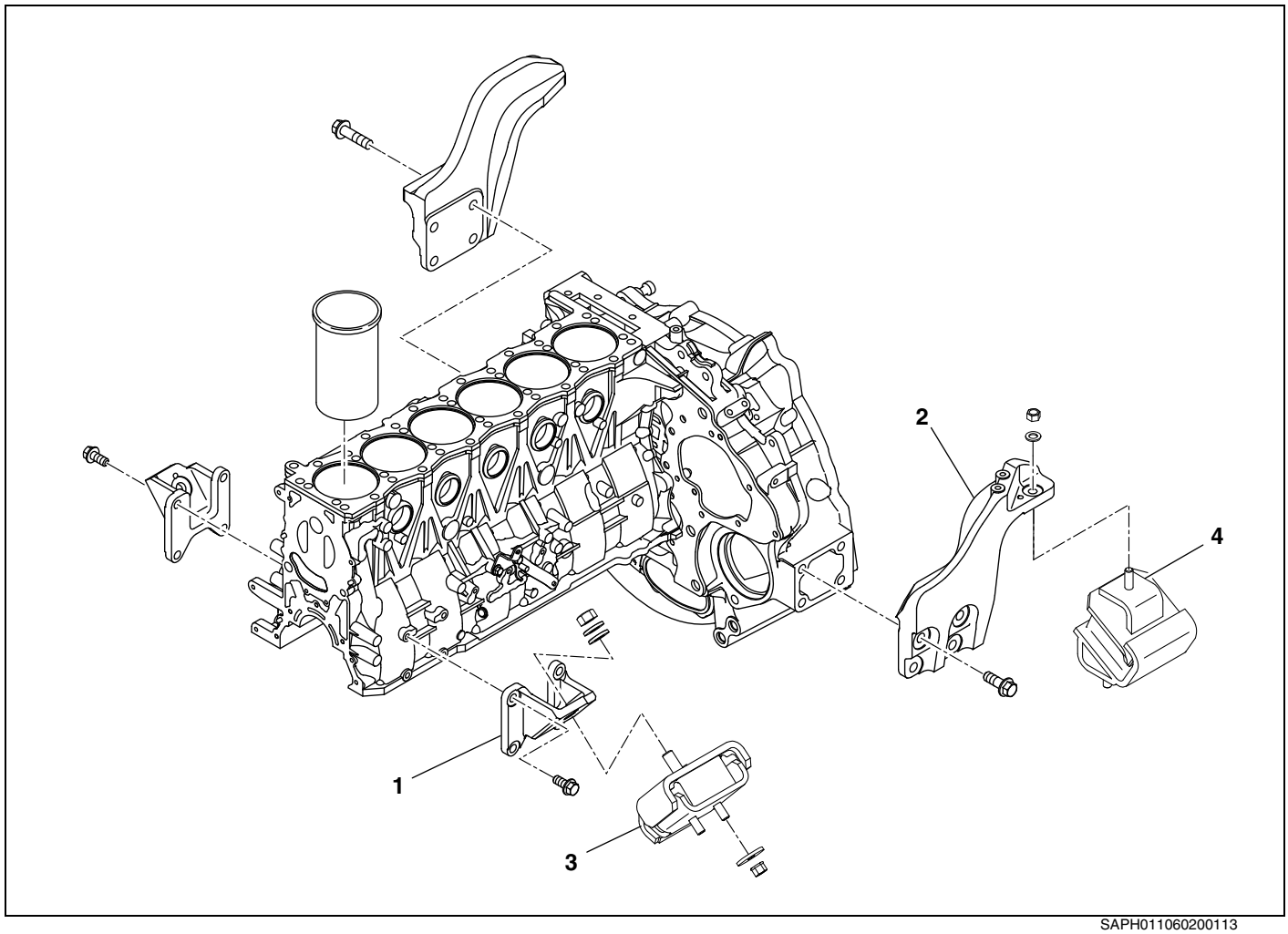


SAPH011060200113

| | | | |
|---|---|---|---|
| **1** | **Engine mounting bracket, front** | **3** | **Engine mounting, front** |
| **2** | **Engine mounting bracket, rear** | **4** | **Engine mounting, rear** |

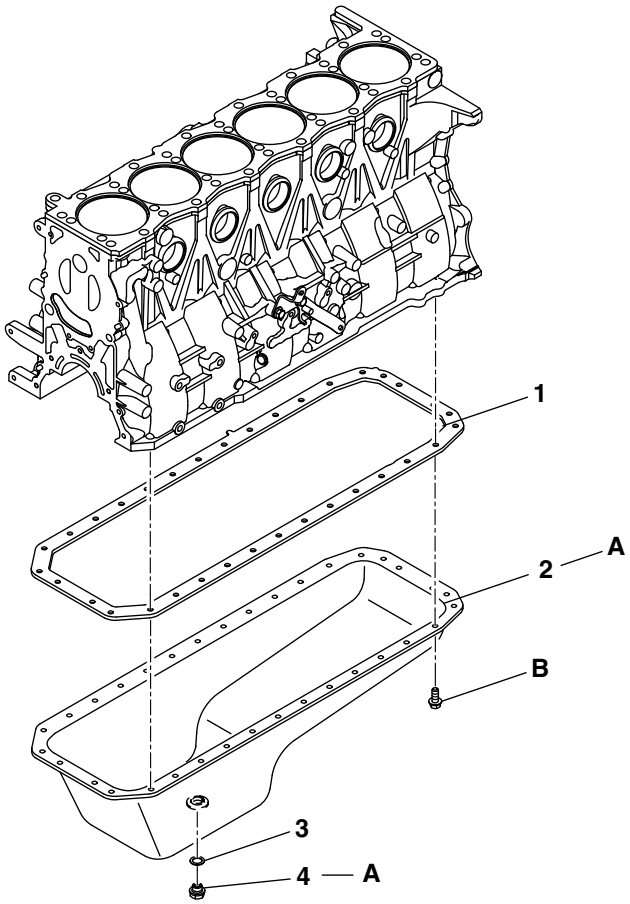


SAPH011060200114

| | | | |
|---|---|---|---|
| 1 | Gasket | 3 | Soft washer |
| 2 | Oil pan | 4 | Drain plug |

**Tightening torque** **Unit: N·m {kgf·cm, lbf·ft}**

| | | | |
|---|---|---|---|
| A | 41 {420, 30} | B | 30 {310, 22.4} |

# SPECIAL TOOL

EN0110602K100005

Prior to starting an engine overhaul, it is necessary to have these special tools.

| Illustration | Part number | Tool name | Remarks |
|---|---|---|---|
| 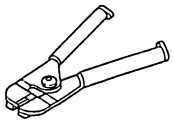 | S0944-21011 | PISTON RING EXPANDER | For Piston ring |
| 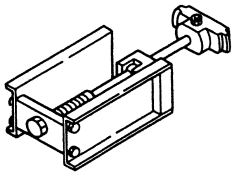 | S0942-02100 | PULLER | For Cylinder liner |
| 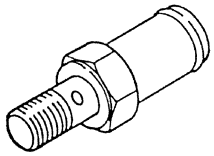 | SZ910-24098 | CONNECTOR BOLT | For Piston cooling jet |
| 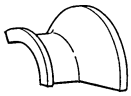 | S0947-11490 | GUIDE | |
| 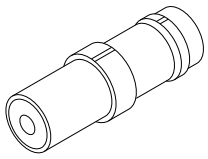 | S0940-21540 | SPINDLE | |
| 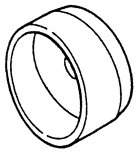 | S0948-11540 | GUIDE | |
| 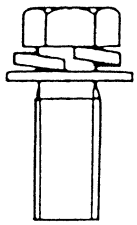 | SH691-20825 | BOLT | |
| 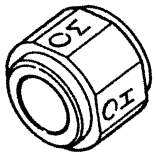 | S0948-11130 | GUIDE | For Connecting rod bushing |

| Illustration | Part number | Tool name | Remarks |
|---|---|---|---|
| 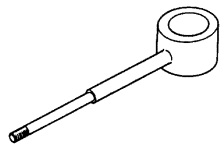 | S0940-21530 | PRESS SUB-ASSEMBLY | |
| 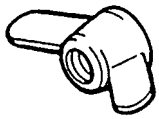 | SL271-01036 | WING NUT | |
| 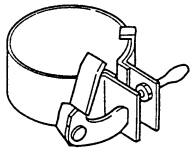 | S0944-11370 | PISTON RING HOLDER | |
| 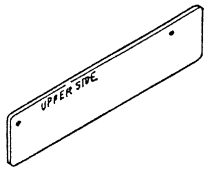 | 09219-E4010 | GAGE | |

# OVERHAUL

EN0110602H200005

## IMPORTANT POINTS - DISASSEMBLY

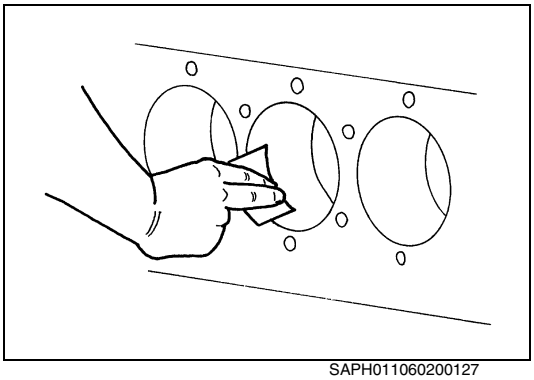

SAPH011060200127

**1. REMOVE THE PISTONS WITH CONNECTING RODS.**

(1) Remove the pistons and connecting rods from the cylinder block upper side.

**NOTICE**

- **Remove carbon deposits from the end inside the cylinder liner with a scraper or emery paper (recommended: No. 150) in a circular direction.**

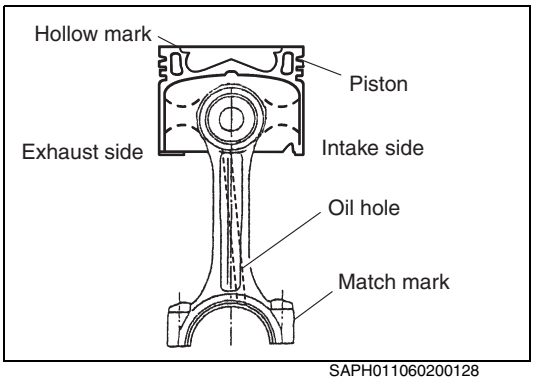


SAPH011060200128

- **Arrange the removed pistons and connecting rod caps in the order of cylinder numbers. Be careful not to change the combination of the connecting rod and cap.**

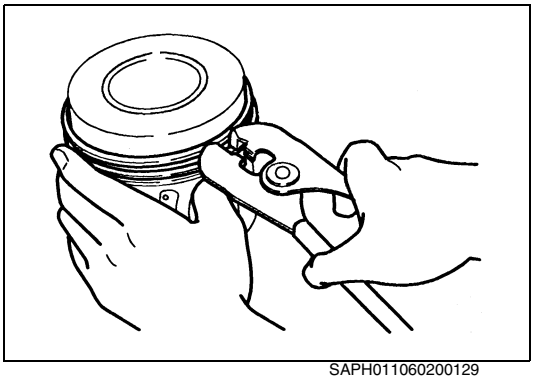

SAPH011060200129

**2. REMOVE THE PISTON RINGS.**

(1) Remove the piston ring using the special tool.
**SST: Piston ring expander (S0944-21011)**

**NOTICE**

- **Handle the piston rings carefully because they are made of a special casting which is easily broken.**
- **Keep the piston rings for each cylinder separately.**

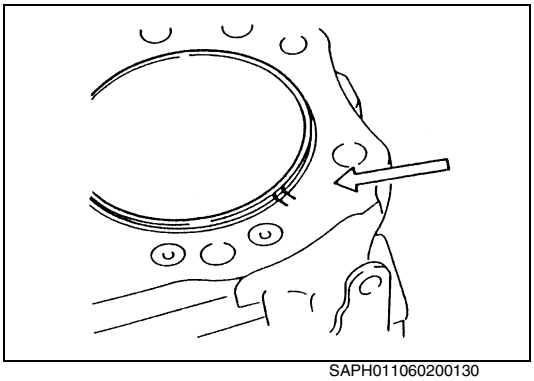

SAPH011060200130

**3. REMOVE THE CYLINDER LINER.**

(1) Before removing the cylinder liner, put alignment marks on the cylinder block and liner flange.

**NOTICE**

**Do not make alignment marks with a punch.**

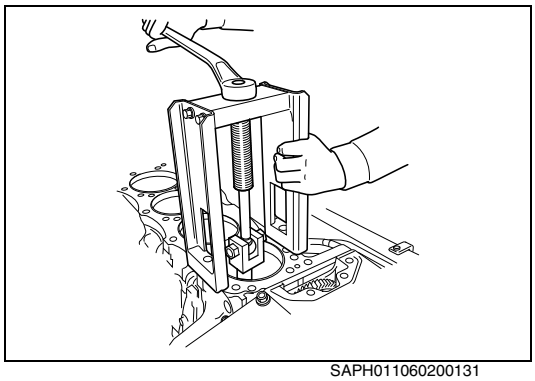
SAPH011060200131

(2) Pull the cylinder liner from the cylinder block using the special tool.
**SST: Puller (S0942-02100)**

**NOTICE**

- **Carefully set the special tool to prevent touching the piston cooling jet.**
- **After removing the cylinder liners, arrange them in sequence.**

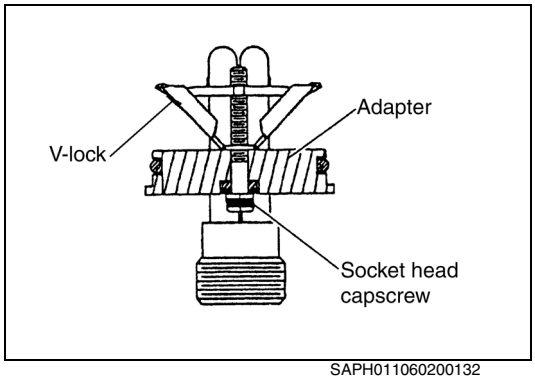

SAPH011060200132

**4. REMOVE THE BLOCK HEATER.**

(1) Remove the harness by loosening the cord nut.
(2) Loosen the socket head capscrew.
(3) Lever the heater out by using a bar.

**NOTICE**

- **Do not damage the adapter installation hole, otherwise water will leak.**
- **Do not reuse the V-lock.**

## IMPORTANT POINT - ON - VEHICLE INSPECTION

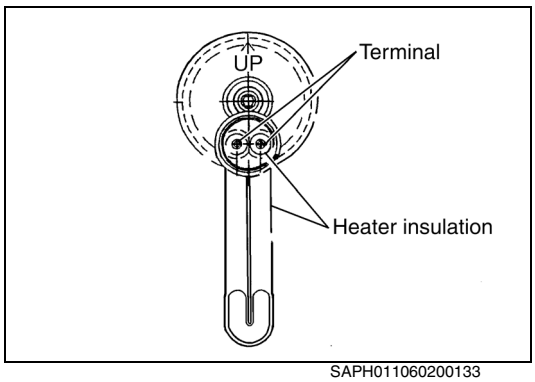

SAPH011060200133

**1. INSPECT THE BLOCK HEATER.**

(1) Measure the resistance between terminals.
If not standard value, replace block heater assembly.

| Standard | 13.1-15.2 Ω |
|---|---|

(2) Measure the resistance of insulation between terminals and heater insulation. If not standard value, replace block heater assembly.

| Standard | More than 5 MΩ |
|---|---|

## IMPORTANT POINTS - ASSEMBLY

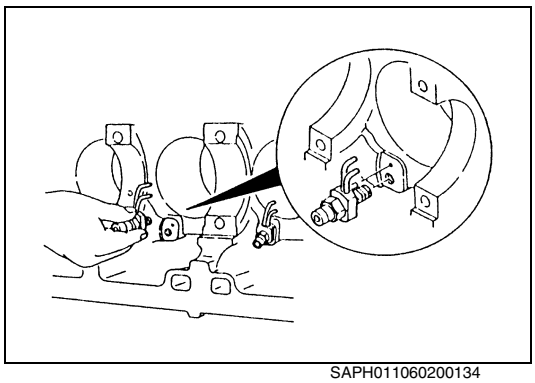
SAPH011060200134

**1. INSPECT AND ADJUST THE PISTON COOLING JET.**

(1) Install the piston cooling jet on the cylinder block using the special tool.
**SST: Connector bolt (SZ910-24098)**

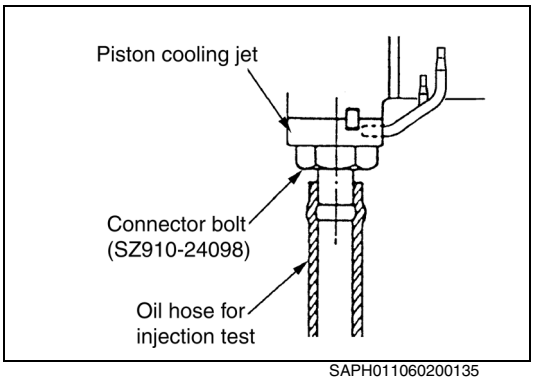

SAPH011060200135

(2) For the jet test, connect the oil hose to the connector bolt from the cylinder block lower side.

**NOTICE**
**Use clean engine oil for jet flow.**

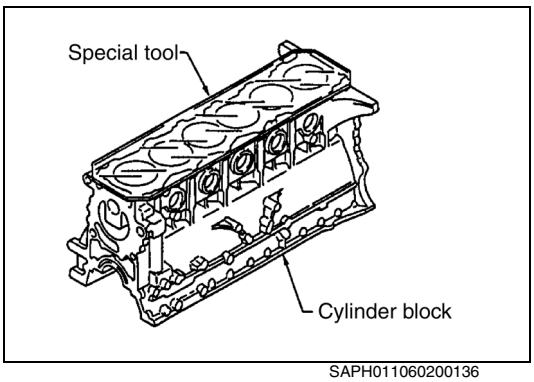

SAPH011060200136

(3) Set the special tool on the cylinder block upper surface against the dowel pin.
**SST: Gage (09219-E4010)**

(4) Test jet oil flow from the piston cooling jet nozzle at a hydraulic pressure of 245 kPa {2.5 kgf/cm$^2$, 35 lbf/in$^2$}.

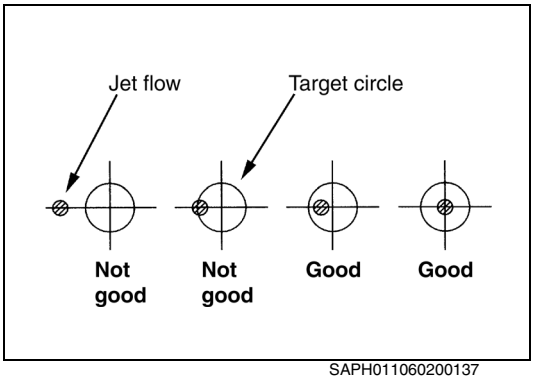

SAPH011060200137

(5) If the center of the jet flow is within the two target circles (8 mm {0.3150 in} and 15 mm {0.5906 in} diameter: Red), the test is acceptable.

**⚠ WARNING**
- **Engine oil is flammable.**
- **Never use an open flame or a naked bulb.**
- **Carry out the following inspection only in a well-ventilated area.**

(6) If the center of the jet flow is out of the two target circles, adjust or replace the jet.

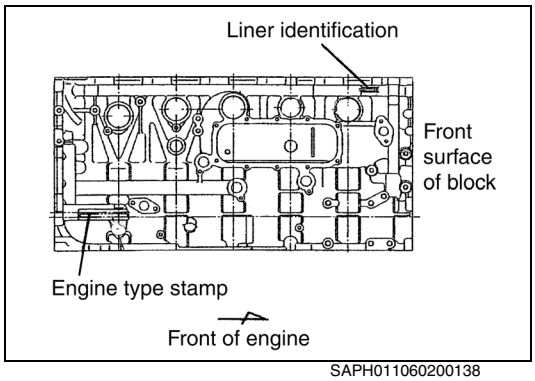

SAPH011060200138

**2. INSTALL THE CYLINDER LINER.**

**NOTICE**

- **When assembling the cylinder liner with the cylinder block, clearance can be set to three levels.**
- **The upper surface and side surface of the cylinder block are stamped A, B or C depending on the inside diameter. Insert a matching cylinder liner having the same symbol.**

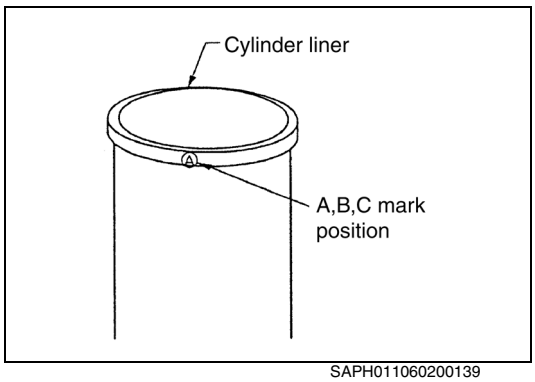

SAPH011060200139

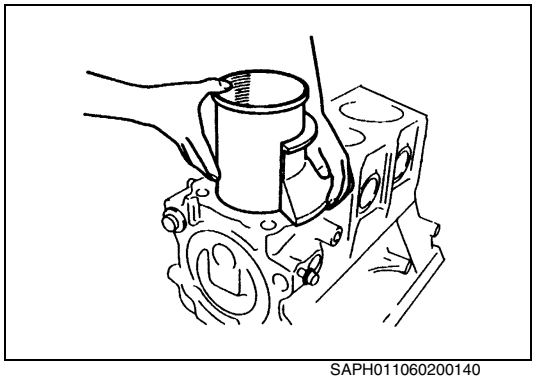
SAPH011060200140

(1) Apply engine oil to the inner surface of the block bore and insert the cylinder liner using the special tool.
**SST: Guide (S0947-11490)**

**NOTICE**
**Handle the cylinder liner carefully because it is thin.**
**(If it falls on the floor, it cannot be used.)**

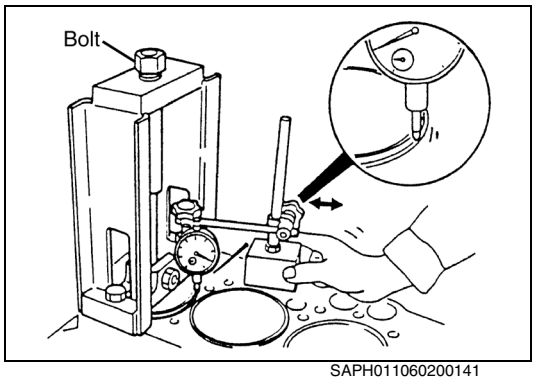

SAPH011060200141

**3. MEASURE THE PROTRUSION AT THE CYLINDER LINER FLANGE.**
**SST: Puller (S0942-02100)**

**Tightening Torque:**
**9.8 N·m {100 kgf·cm, 7 lbf·ft}**

| | |
|---|---|
| **Standard** | **0.01-0.08 mm {0.0004-0.0031 in.}** |

**4. MEASURE THE CRANKSHAFT.**

(1) If necessary, grind the crankshaft and use an undersize bearing.

| Bearing size | Outside diameter | |
|---|---|---|
| | Crank pin | Journal |
| Standard | 64.94-64.96 mm {2.5567-2.5574 in.} | 79.94-79.96 mm {3.1473-3.1480 in.} |
| 0.25US | 64.69-64.71 mm {2.5469-2.5476 in.} | 79.69-79.71 mm {3.1375-3.1381 in.} |
| 0.50US | 64.44-64.46 mm {2.5371-2.5377 in.} | 79.44-79.46 mm {3.1276-3.1283 in.} |

(2) Dimension of fillet "R".

| | |
|---|---|
| Crank pin | 2.5-3.0 mm {0.0985-0.1181 in.} |
| Journal | |

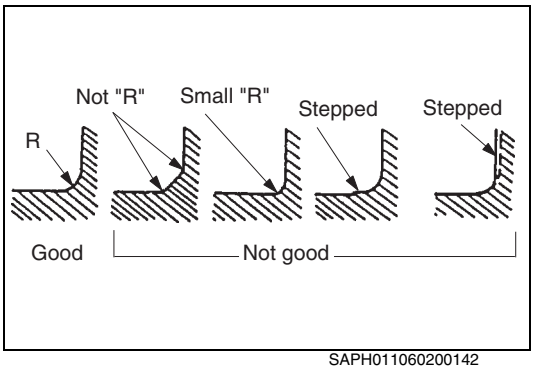

SAPH011060200142

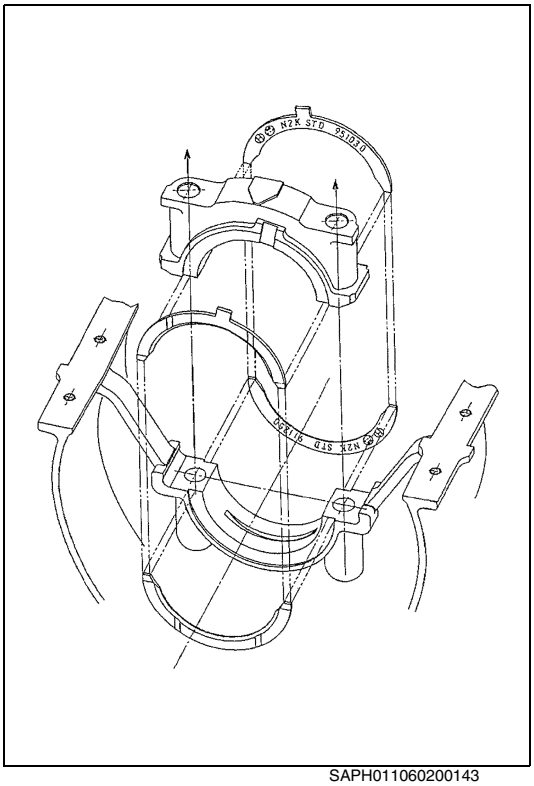
SAPH011060200143

**5. INSTALL THE CRANKSHAFT.**

(1) Install the main bearing onto the bearing caps and the cylinder block.

**NOTICE**

- **Install the bearing with the oil hole on the block side and the bearing without the oil hole on the cap side.**
- **Apply clean engine oil to inner surfaces of the bearings.**

(2) Install the thrust bearing with the groove side (front) toward the crank arm and with the part No. stamp (back) toward the main bearing cap or cylinder block.

**HINT**

**Apply engine oil or grease to the back of the bearing to prevent loosening during installation.**

(3) Install the crankshaft onto the cylinder block.

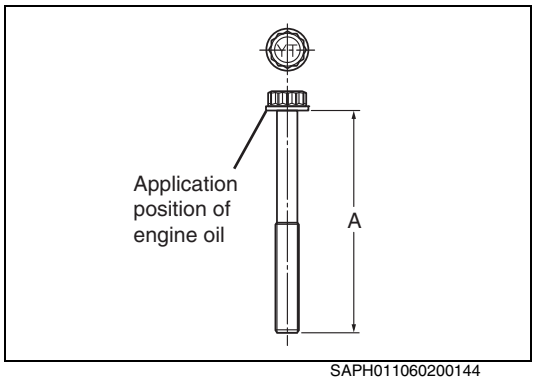

SAPH011060200144

**6. INSTALL THE MAIN BEARING CAP.**

(1) Install the main bearing cap onto the cylinder block.

**NOTICE**

**Check the number stamped on the cap.**

(2) Measure the length below the head of the bearing cap bolt and replace any bolts not meeting the limit with new ones.

| Dimension A | 106.5 mm {4.193 in.} |
|---|---|

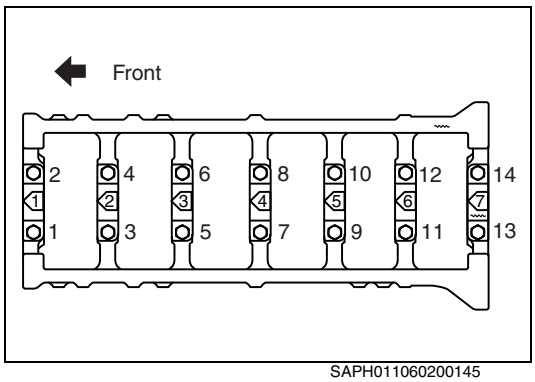

SAPH011060200145

(3) Apply clean engine oil to the bolt seat and bolt threads.

(4) Tighten the bolts in the order as shown in the figure to the specified torque.

**Tightening Torque:**

**69 N·m {700 kgf·cm, 51 lbf·ft}**

(5) Loosen all bolts, tap the front and back ends of the crankshaft using a plastic hammer.

(6) Tighten the bolts as in step (4).

(7) Mark the bolt heads with paint.

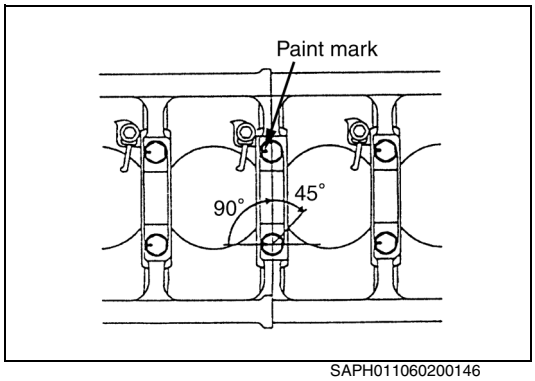

SAPH011060200146

(8) Tighten the bolts 90° (1/4 turn) in the same order as in step (4).

(9) Retighten the bolts 45° (1/8 turn) as in step (8).

(10) Make sure that all paint marks face the same direction.

**NOTICE**

**When adding torque, never untighten the bolts, even if they have been overtightened.**

(11) After tightening, tap the front and back ends of the crankshaft using a plastic hammer to allow complete fit.

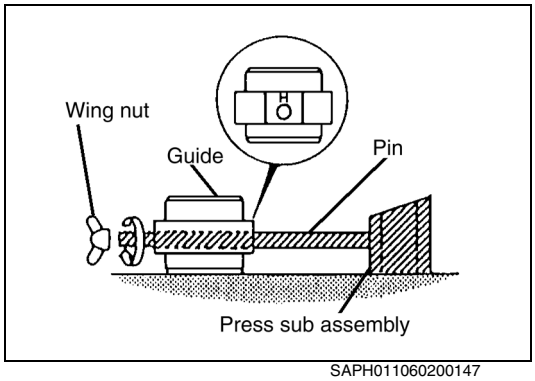

SAPH011060200147

**7. REPLACE THE CONNECTING ROD BUSHING.**

(1) Prepare the special tools.

a. Assembly the guide and press sub-assembly inserting its pin into the guide then secure them with the wing nut.

**SST:**

**Guide (S0948-11130)**

**Press sub-assembly (S0940-21530)**

**Wing nut (SL271-01036)**

**NOTICE**

- **Bring lever "H" punched on the guide above the pin.**
- **Making sure to align both supporting surfaces of the guide and press sub-assembly flush on a flat plane.**

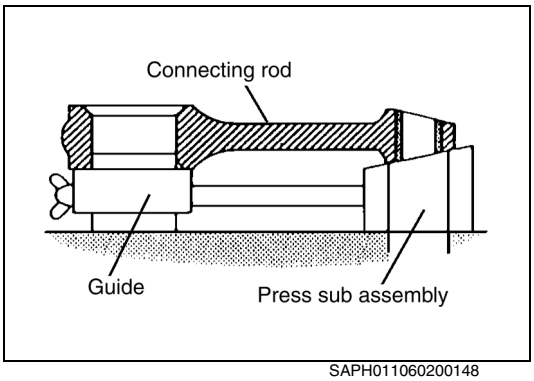

SAPH011060200148

(2) Using a special tool, remove the connecting rod bushing.
a. Set the connecting rod assembled without connecting rod bearing on the guide and press sub-assembly.

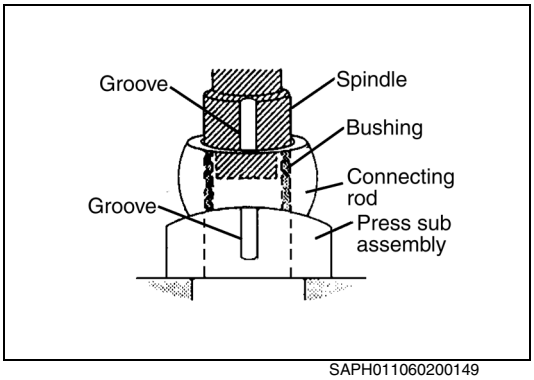

SAPH011060200149

b. Install the spindle into the bushing.
**SST: Spindle (S0940-21540)**

**NOTICE**
**Align the groove of the spindle with the groove of the press sub assembly.**

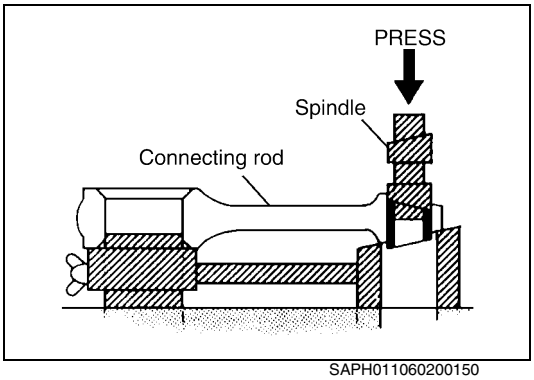

SAPH011060200150

c. Using a hydraulic press, remove the bushing.

**NOTICE**
**Always operate the press slowly and smoothly.**

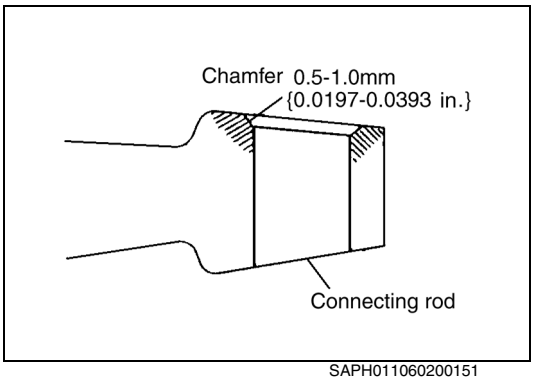

SAPH011060200151

(3) Chamfer one edge of the bushing hole at the small end of the connecting rod uniformly by 0.5-1.0 mm {0.0197-0.0393 in.}.

**NOTICE**
- **Irregular chamfering can cause out-of-roundness of the pressed bushing, which may result in jamming during insertion.**
- **Remove dust from the inner surface of the small-end hole.**

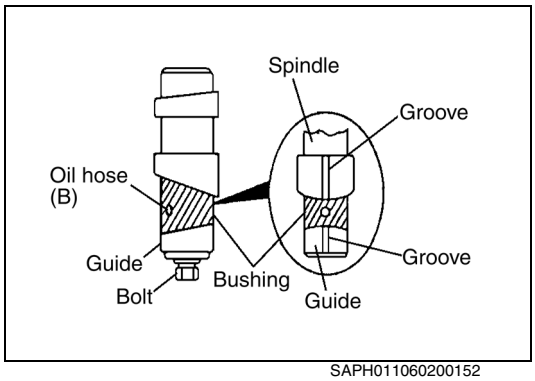

SAPH011060200152

(4) Mount the bushing on the spindle.
a. Set the bushing and guide on the spindle as shown in the figure, then secure them with the bolt.

**SST:**
**Spindle (S0940-21540)**
**Guide (S0948-11540)**
**Bolt (SH691-20825)**

**Tightening Torque:**
**5.0-6.8 N·m {50-70 kgf·cm, 3.62-5.06 lbf·ft} (Bolt)**

**NOTICE**

- **Align the groove of the spindle with the groove of the press sub assembly.**
- **Make sure that the contact surfaces of the bushing seats firmly against the contact surfaces of the spindle and guide.**

b. Apply the fresh engine oil around the bushing and guide.

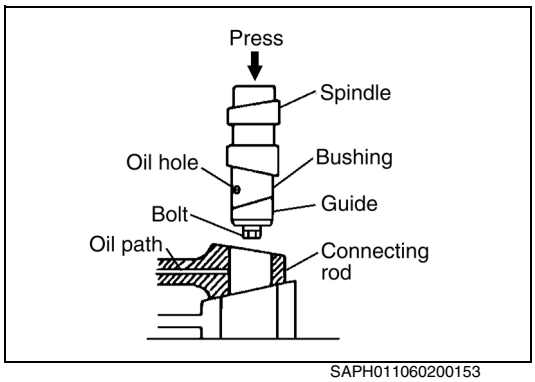

SAPH011060200153

(5) Align the oil hole of the bushing with the oil hole of the connecting rod.

**NOTICE**

- **Put the connecting rod to the press sub assembly and the chamfer side of the small end to the bushing side.**
- **Apply the fresh engine oil to the bore of the connecting rod.**

(6) Using a press, install the bushing in the connecting rod.

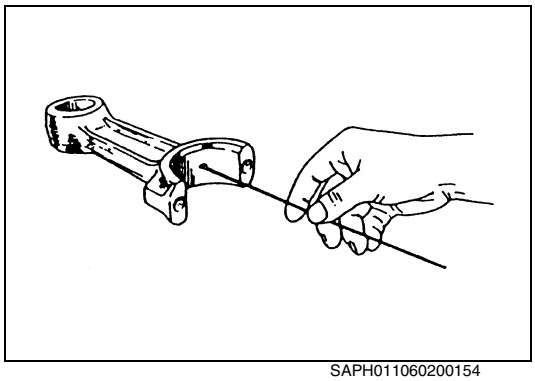
SAPH011060200154

(7) Inspect the bushing positioning after installation.
a. Make sure that the oil hole of the bushing and the oil path of the connecting rod are suitably aligned allowing a 6 mm {0.2362 in.} diameter rod to penetrate.

**NOTICE**
**Misalignment can lead to insufficient lubrication, which may result in seizure.**

b. Insert a new piston pin. When it is turned gently, make sure that there is no catch or rough movement.

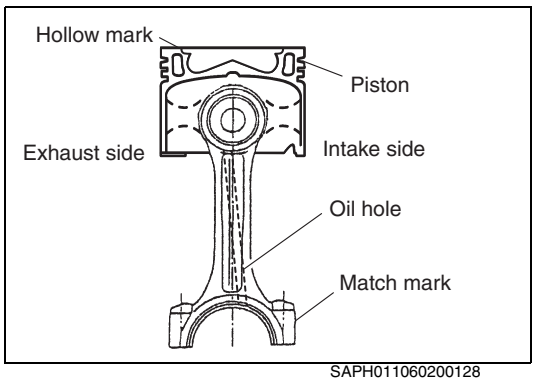

SAPH011060200128

**8. ASSEMBLE THE PISTON AND CONNECTING ROD.**

(1) Heat the piston to 50°C {122°F}.

(2) Assemble the piston O-mark to be opposite to the connecting rod match mark.

**NOTICE**
**Replace the retainer ring with a new one.**

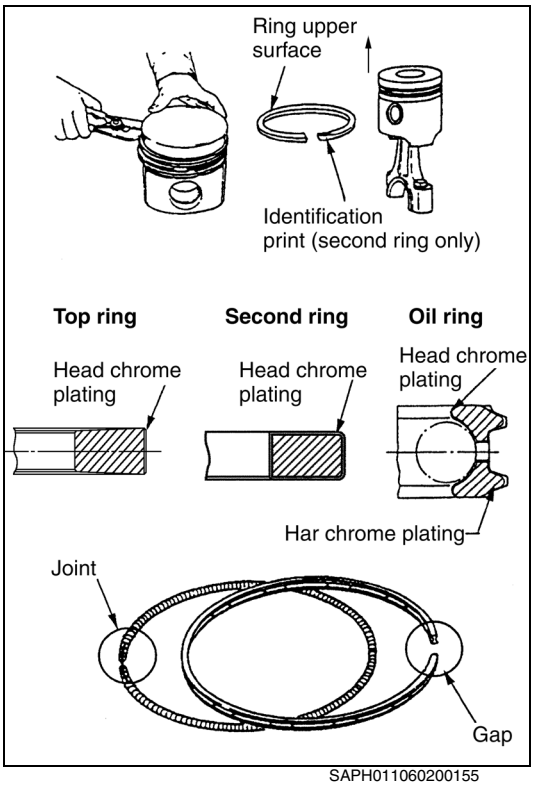

SAPH011060200155

**9. ASSEMBLE THE PISTON RING.**

(1) Install in the order of oil ring, second ring and top ring using the special tool.
**SST: Piston ring expander (S0944-21011)**

**NOTICE**
**Install the second ring with the identification print on the piston ring facing towards the upper surface.**

(2) Connect the joint of the coil expander for the oil ring and install it inside the piston ring. Assemble the ring with the joint 180° opposite to the matching point.

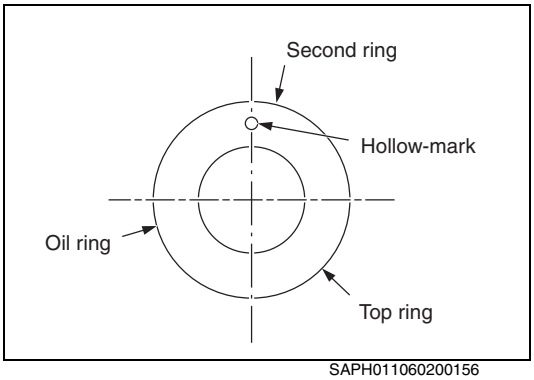

SAPH011060200156

(3) Position the matching points of the piston ring at an even distance as shown in the figure.

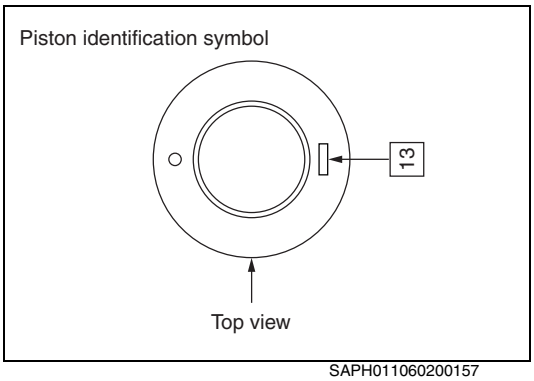

SAPH011060200157

**10. CHECK THE PISTON.**

Before assembling the piston with the connecting rod, check whether the piston us specified for this engine.

**NOTICE**
**Check using the engine compatible identification code on the top of the piston.**

Engine compatible identification code.

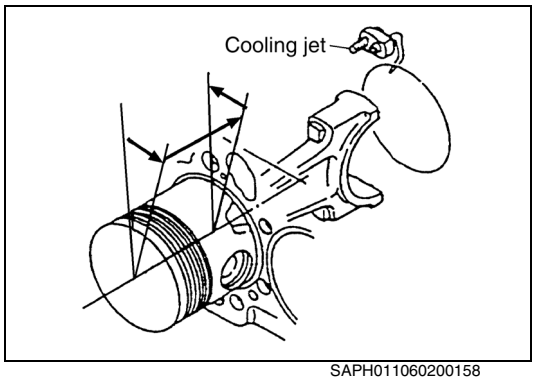

SAPH011060200158

**11. INSTALL THE PISTON.**

(1) Apply engine oil to the piston, cylinder liner and connecting rod bearing, then compress the piston ring using the special tool.
**SST: Piston ring holder (S0944-11370)**

**NOTICE**

- **When installing the piston, be careful that the cooling jet is not struck by the connecting rod.**
- **Make sure that the hollow-mark on the piston is at the exhaust side.**

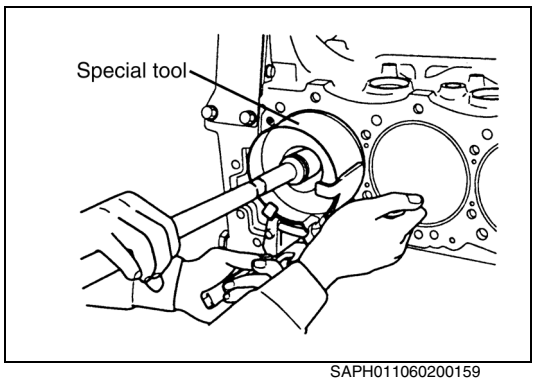

SAPH011060200159

(2) Insert the piston into the cylinder liner.

**12. TIGHTEN THE CONNECTING ROD BOLT.**

(1) Measure the length of the bolts, if the length is A or more, replace with new bolts.

| Dimension A | 67 mm {2.638 in.} |
|---|---|

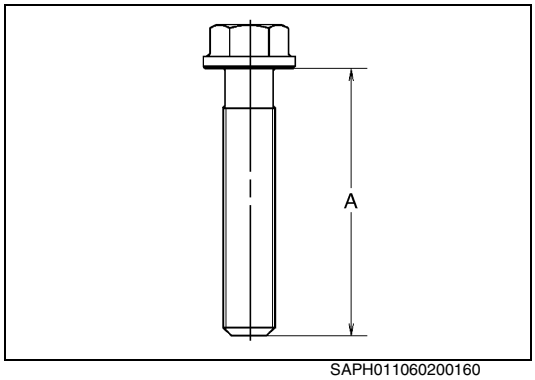

SAPH011060200160

(2) Apply clean engine oil to the bolt thread and the bolt seat surface of the connecting rod cap.

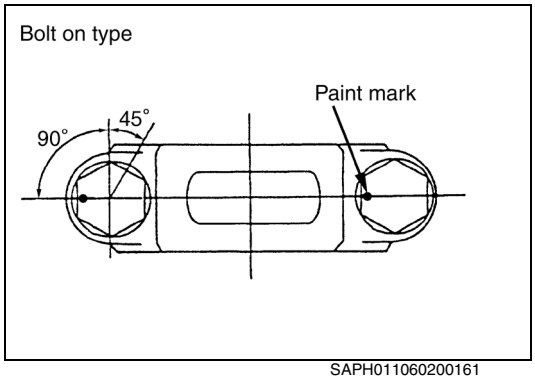

SAPH011060200161

(3) Tighten the connecting rod bolt to the specified torque.
**Tightening Torque:**
**69 N·m {700 kgf·cm, 51 lbf·ft}**

(4) Mark the bolt heads in the same direction with paint.
(5) Tighten the connecting rod bolt 90° (1/4 turn).
(6) Tighten the connecting rod bolt 45° (1/8 turn).
(7) Make sure that the paint marks face the same direction.

**NOTICE**

**When retightening the bolts, never adjust them by turning counterclockwise, even if they have been retightened more than the specified angle above.**
**If the angle of bolts is adjusted to the specified angle by turning counterclockwise, the axial force of the bolts might fall short and it is feared that this could reduce the engine reliability. Also there is a possibility that this could reduce the number of times a bolt can be reused.**

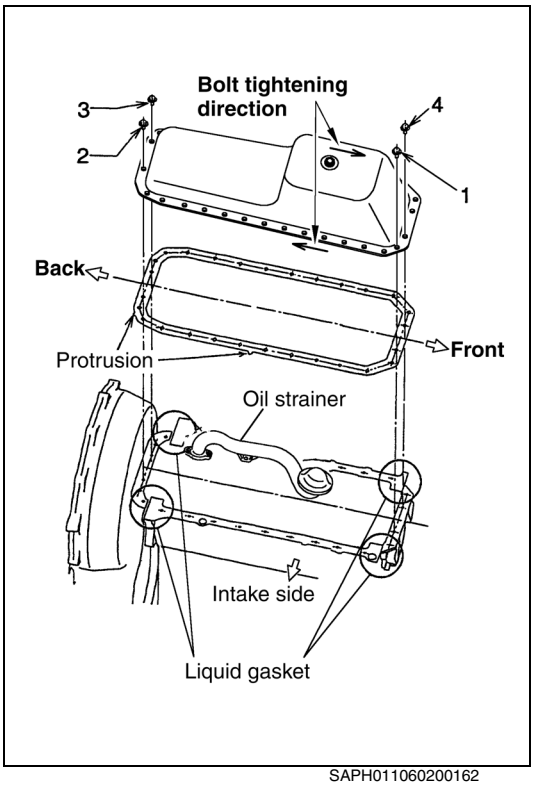


SAPH011060200162

**13. INSTALL THE OIL PAN.**

(1) Make sure that there is no deformation, impact marks or foreign particles on the cylinder block, oil pan or flange surface. Apply liquid gasket to the front and back ends of the cylinder block lower surface.

**NOTICE**

**Refer to "PARTS AND POSITIONS FOR LIQUID GASKET".**

(2) Install the gasket so that the protrusion is at the flywheel housing side and the intake side. (the print seal surface is at the cylinder block side)

(3) Place a guide pin of 70 mm or more in the cylinder block and assemble the oil pan against the guide.

(4) Tighten oil pan fitting bolts in the order 1 - 2 - 3 - 4 with an impact wrench.

**Tightening Torque:**

**19.7-24.5 N·m {200-250 kgf·cm, 15-18 lbf·ft}**

(5) Finish tightening the bolts with a torque wrench to the specified torque. Tighten the bolts according to the arrow in the figure.

**NOTICE**

**Make sure that the washer is not on the flange.**

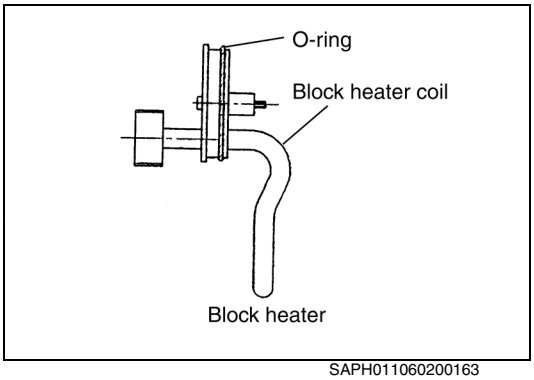


SAPH011060200163

**14. INSTALL THE BLOCK HEATER.**

(1) Apply silicone spray to O-ring. (LPS Laboratories: Parts No.01516 or equivalent.)

**NOTICE**

**If O-ring is not applied, it could damage and allow water to leak.**

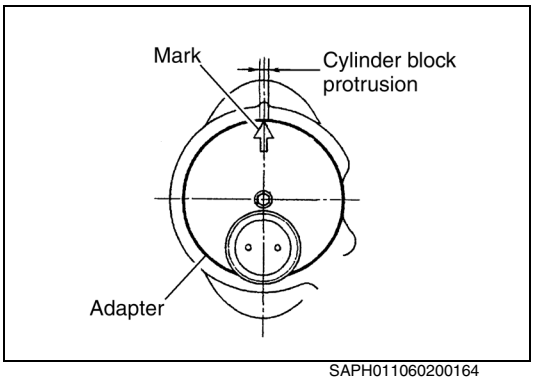


SAPH011060200164

(2) When installing the block heater, match the arrow mark on the heater to the mark on the cylinder block protrusion.

**NOTICE**

- **Do not damage the adapter installation hole, otherwise water will leak.**
- **If the marks do not match, the heater coil will touch the cylinder block.**

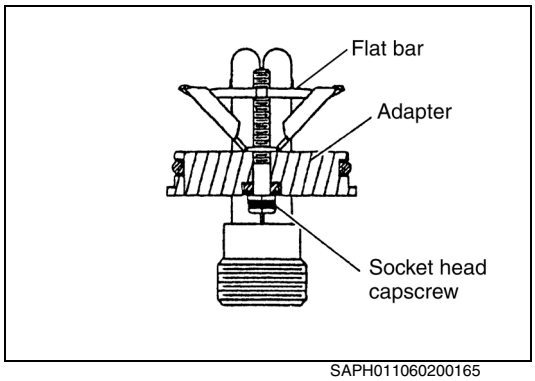


SAPH011060200165

(3) Tighten the socket head capscrew.

**Tightening Torque:**
**2.3-3.3 N·m {23-33 kgf·cm, 1.7-2.3 lbf·ft}**

**NOTICE**
**Do not overtighten. If overtightened, the flat bar could come off the socket head capscrew and drop into the water jacket. This could cause the engine to overheat due to cooling system damage.**

(4) Install the harness by tightening the cord nut fully by hand only.

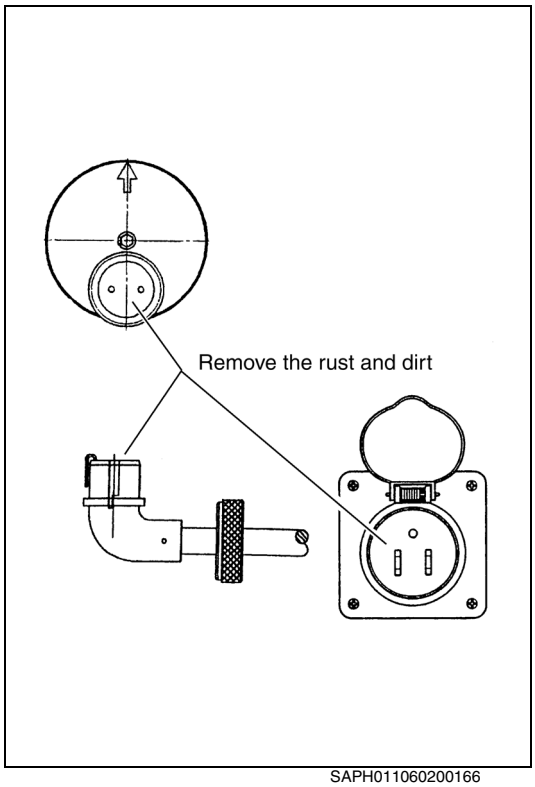


SAPH011060200166

(5) Handling precaution

**NOTICE**

- **Before using it, remove all the rust and dirt. Any rust and water attached to the terminal can trip the breaker.**
- **First, put the harness in the socket of the chassis side and turn on power (120 V).**

**⚠ CAUTION**
**Make sure to disconnect the power source plug outlet before starting the engine.**
**Starting the engine without disconnecting it can cause the breakdown of the block heater.**

**15. REFILL THE HINO LONG LIFE COOLANT.**

(1) Concentration of Hino long life coolant.

- The freezing point of the coolant varies with the concentration of antifreeze. Select the appropriate concentration to protect against freezing according to the following table.

**NOTICE**

**If water to coolant ratio is not mixed according to the following table the engine will overheat and block heater coil will melt.**

**LLC-Water Mixing Table**

| | Freezing protection | | Freezing temperature | | LLC | | | | Water | | |
|---|---|---|---|---|---|---|---|---|---|---|---|
| | °F | °C | °F | °C | | US Qt | Liter | % | % | US Qt | Liter |
| J08E engine | -22 | -30 | -31.9 | -35.5 | MT | 12.4 | 11.75 | 50 | 50 | 12.4 | 11.75 |
| | | | | | AT | 12.2 | 11.5 | | | 12.2 | 11.5 |

*AT=Available with automatic transmission
MT=Available with manual transmission

**NOTICE**

**Do not mix more than 60% or less than 50% LLC.**
**Concentrations more than 63% result in a loss of freezing protection.**
**Concentrations below 50% result in a loss of corrosion protection.**

# INSPECTION AND REPAIR

EN0110602H300004

Unit: mm {in.}

| Inspection item | | Standard | Limit | Remedy | Inspection procedure |
|---|---|---|---|---|---|
| Cylinder block flange depth | | 3 {0.1181} | — | — | Measure 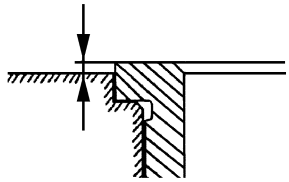 |
| Cylinder liner thickness | | 3 {0.1181} | — | — | |
| Cylinder liner protrusion | | 0.01-0.08 {0.0004-0.0031} | — | — | |
| Block inside diameter | A | 117-117.008 {4.6063-4.6066} | — | — | Reference only |
| | B | 117.008-117.014 {4.6067-4.6068} | | | |
| | C | 117.014-117.022 {4.6069-4.6071} | | | |
| Liner outside diameter | A | 116.982-116.990 {4.6056-4.6058} | — | — | Reference only |
| | B | 116.990-116.996 {4.6059-4.6061} | | | |
| | C | 116.996-117.004 {4.6062-4.6064} | | | |
| Clearance between block and liner | A | 0.010-0.026 {0.0004-0.0010} | — | — | Reference only |
| | B | 0.012-0.024 {0.0005-0.0009} | | | |
| | C | 0.010-0.026 {0.0004-0.0010} | | | |
| Piston outside diameter at A: 17 {0.6693} | | 111.927-111.943 {4.40657-4.40720} | — | Replace piston and/or liner. | Measure 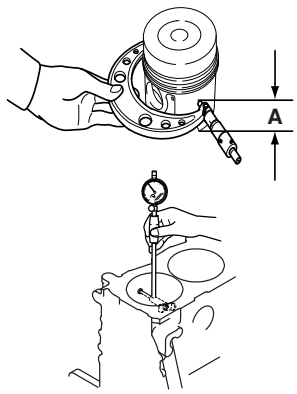  |
| Liner inside diameter (Apply the value obtained at the most worn point to the cylinder liner inside diameter.) | | 112 {4.409} | 112.15 {4.415} | | |
| Clearance between piston and cylinder liner | | 0.057-0.073 {0.0023-0.0028} | — | | |

| Inspection item | | Standard | Limit | Remedy | Inspection procedure |
|---|---|---|---|---|---|
| Piston ring width | Top | — | — | Replace ring. | Measure 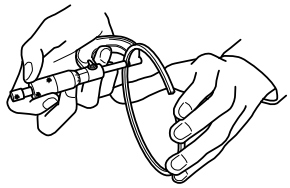 |
| | Second | 1.970-1.990 {0.0776-0.0783} | 1.9 {0.0748} | | |
| | Oil | 3.970-3.990 {0.1563-0.1570} | 3.9 {0.1535} | | |
| Piston groove width | Top | — | — | Replace piston. | Measure 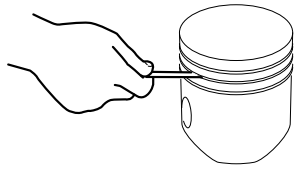 |
| | Second | 2.055-2.075 {0.0809-0.0817} | 2.2 {0.0866} | | |
| | Oil | 4.015-4.035 {0.1581-0.1588} | 4.1 {0.1614} | | |
| Clearance between piston ring and piston ring groove | Top | — | — | — | — |
| | Second | 0.065-0.105 {0.0026-0.0041} | | | |
| | Oil | 0.025-0.065 {0.0010-0.0025} | | | |
| Gap between ends of piston ring | Top | 0.30-0.40 {0.0119-0.0157} | 1.5 {0.0591} | Replace piston ring. | Measure 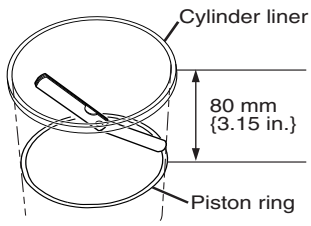  |
| | Second | 0.75-0.90 {0.0296-0.0354} | 1.2 {0.0472} | | |
| | Oil | 0.15-0.30 {0.0059-0.0118} | 1.2 {0.0472} | | |
| Piston pin outside diameter | | 37 {1.4567} | 36.96 {1.4551} | Replace piston pin. | Measure 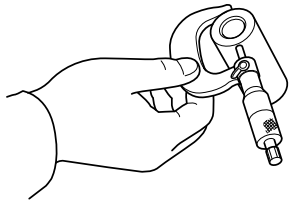 |
| Piston pin bore inside diameter | | 37 {1.4567} | 37.05 {1.4586} | Replace piston. | |
| Clearance between piston pin and piston pin bore | | 0.011-0.032 {0.00043-0.00126} | 0.05 {0.0020} | Replace piston and/or piston pin. | 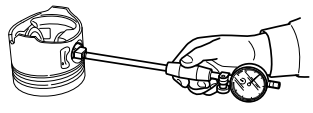 |
| Connecting rod bushing inside diameter | | 37 {1.4567} | 37.1 {1.4606} | Replace connecting rod bushing. | Measure 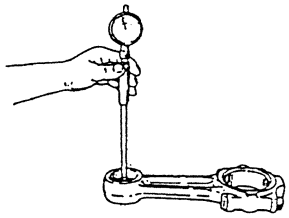 |

| Inspection item | Standard | Limit | Remedy | Inspection procedure |
|---|---|---|---|---|
| Clearance between piston pin and connecting rod bushing | 0.035-0.056 {0.0014-0.0022} | 0.08 {0.0031} | Replace piston pin and/or connecting rod bushing. | — |
| Wear or damage of connecting rod<br>*Dye penetrant check (Color check) | — | — | Replace. | Visual check<br> 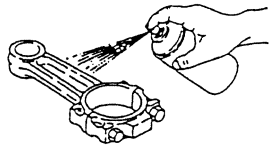 |
| Clogging of connecting rod oil hole | — | — | Replace. | Visual check<br> 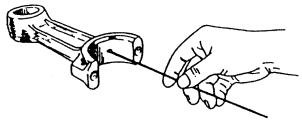 |
| Crank pin outside diameter | 65 {2.559} | More than 0.2 {0.0079} (Repair) | Regrind under size. | Measure<br> 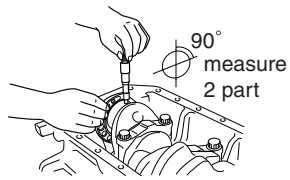 |
| | | 64.3 {2.5314} (Service) | Replace crankshaft. | |
| Clearance between connecting rod bearing and crankpin | 0.031-0.082 {0.0013-0.0032} | 0.2 {0.0079} | Replace connecting rod bearing. | 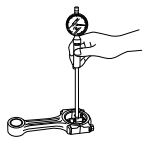 |
| Connecting rod large end width | 34 {1.339} | 33.2 {1.3071} | Replace connecting rod. | Measure<br> 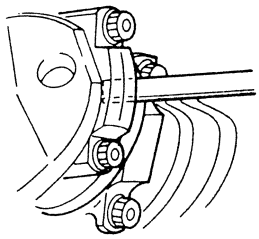 |
| Crankpin width | 34 {1.339} | 34.8 {1.371} | Replace crankshaft. | |
| Connecting rod end play | 0.20-0.52 {0.0079-0.0204} | 1.0 {0.0394} | Replace connecting rod and/or crankshaft. | |
| Crank journal outside diameter | 80 {3.150} | More than 0.2 {0.0079} (Repair) | Regrind under size. | Measure<br> 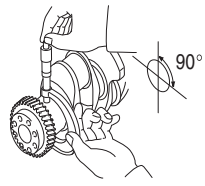 |
| | | 79.3 {3.1220} (Service) | Replace crankshaft. | |
| Clearance between crank journal and main bearing | 0.051-0.102 {0.0021-0.0040} | 0.2 {0.0079} | Replace main bearing. | 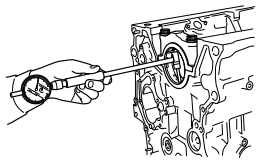 |

| Inspection item | Standard | Limit | Remedy | Inspection procedure |
|---|---|---|---|---|
| Center journal width | 36 {1.417} | 37 {1.456} | Replace crankshaft. | Measure 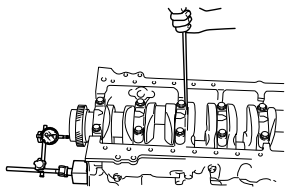 |
| Thrust bearing thickness | 2.5 {0.0984} | — | — | |
| Crankshaft end play | 0.050-0.270 {0.0020-0.0106} | More than 0.5 {0.0197} (Repair) | Replace over size thrust bearing. | |
| | | 1.270 {0.0499} (Service) | Replace crankshaft. | |
| Crankshaft deflection | — | 0.15 {0.0059} | Regrind under size. | Measure 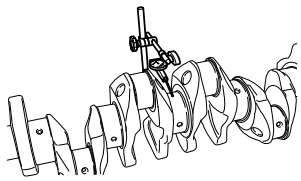 |
| Clogging of crankshaft oil hole | — | — | Clean. | Visual check 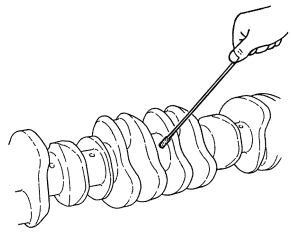 |
| Crack and wear of crankshaft<br>*Dye penetrant check (Color check) | — | — | Replace. | Visual check 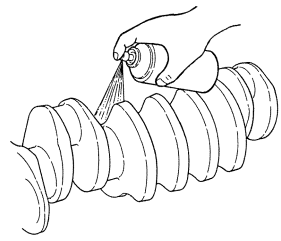 |
| Cylinder block upper surface flatness | Longitudinal direction: 0.06 {0.0024}<br>Right angle direction: 0.03 {0.0012} or less | 0.20 {0.0078} | Replace.<br>NOTICE: Do not grind for repair. | Measure 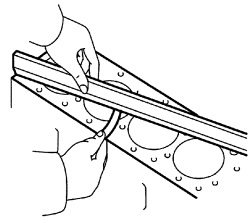 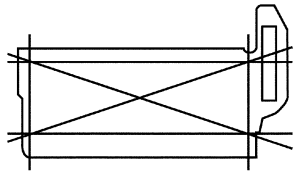 |

# AIR INTAKE SYSTEM (J08E)

EN03-001

**AIR INTAKE MANIFOLD AND PIPE ..... EN03-2**
COMPONENT LOCATOR..... EN03-2
DISMOUNTING AND MOUNTING ..... EN03-3

**AIR INTAKE ..... EN03-4**
COMPONENT LOCATOR..... EN03-4

**AIR CLEANER ..... EN03-5**
DESCRIPTION ..... EN03-5
OVERHAUL ..... EN03-6

**AIR HOSE ..... EN03-7**
COMPONENT LOCATOR..... EN03-7
OVERHAUL ..... EN03-8

**AIR FLOW SENSOR ..... EN03-9**
COMPONENT LOCATOR..... EN03-9
REPLACEMENT ..... EN03-10

**BOOST PRESSURE SENSOR ..... EN03-11**
COMPONENT LOCATOR..... EN03-11
REPLACEMENT ..... EN03-12

# AIR INTAKE MANIFOLD AND PIPE

## COMPONENT LOCATOR

EN0110603D100001

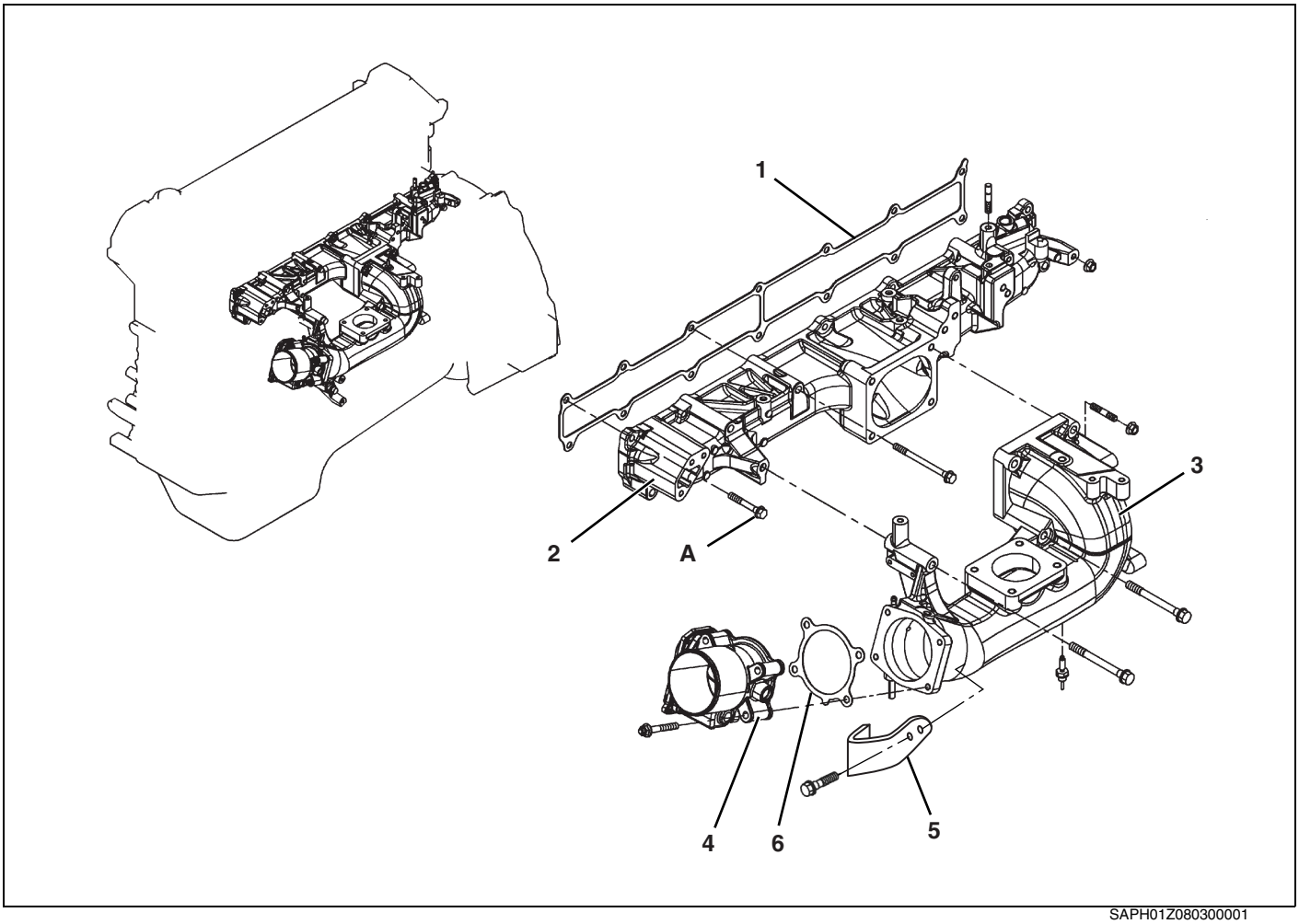


SAPH01Z080300001

| | | | |
|---|---|---|---|
| 1 | Intake manifold gasket | 4 | Intake throttle valve |
| 2 | Intake manifold | 5 | Bracket |
| 3 | Intake pipe | 6 | Gasket * |

*: Nonreusable. Be sure to use new parts.

Tightening torque — Unit: N·m {kgf·cm, lbf·ft}

| | | | |
|---|---|---|---|
| A | 28.5 {290, 21} | | |

# DISMOUNTING AND MOUNTING

EN0110603H100001

## IMPORTANT POINT - MOUNTING

**1. INSTALL THE INTAKE MANIFOLD GASKET.**

(1) Install the intake manifold gasket so that the protrusion is positioned at the stud bolt side of the cylinder head rear end.

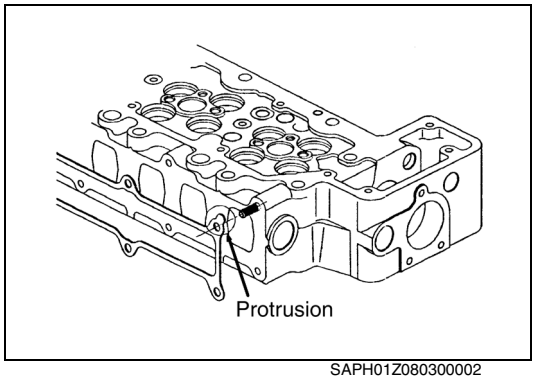


SAPH01Z080300002

# AIR INTAKE

## COMPONENT LOCATOR

EN0110603D100002

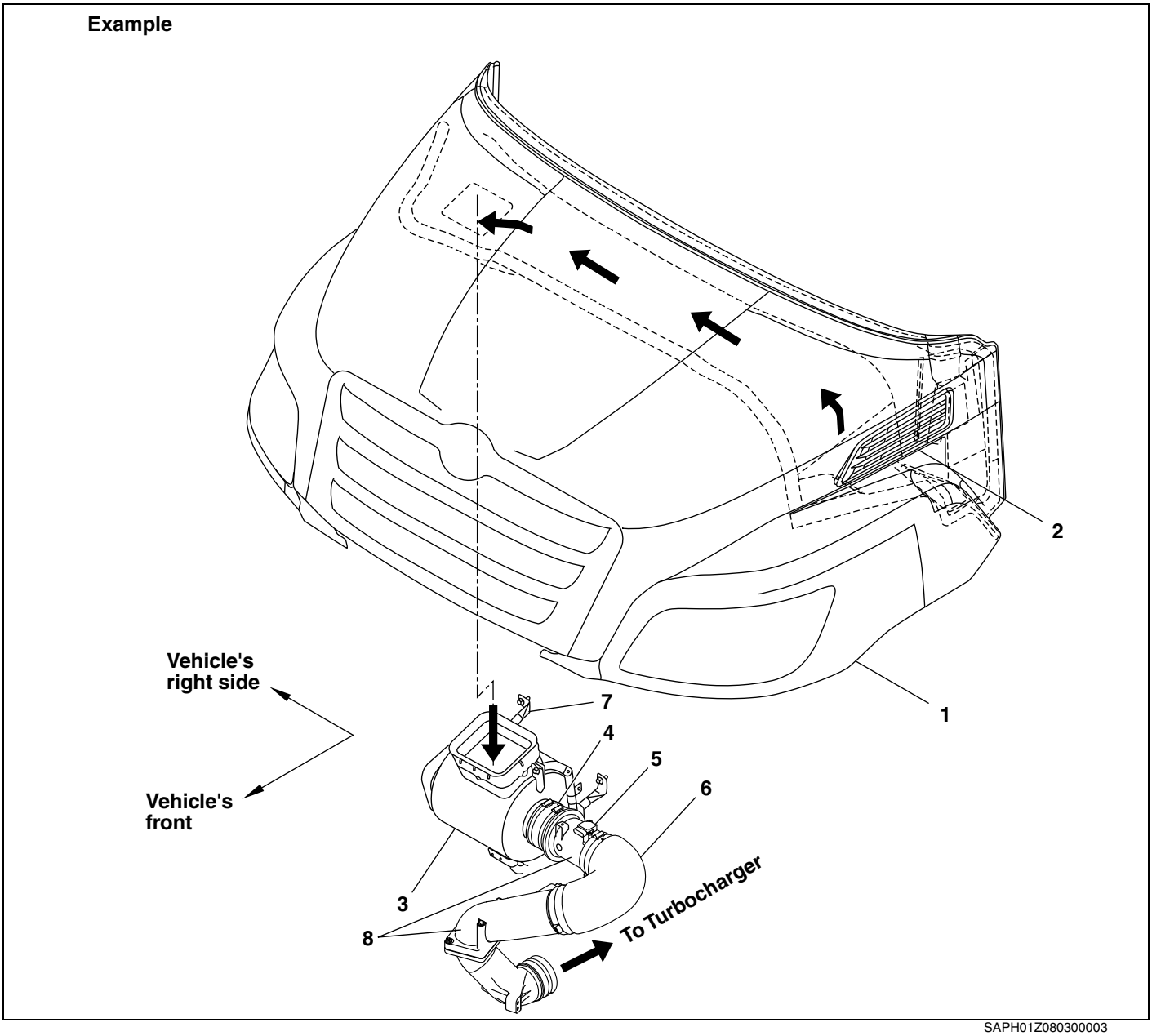


SAPH01Z080300003

| | | | |
|---|---|---|---|
| 1 | Hood | 5 | Air flow sensor |
| 2 | Air intake grille | 6 | Air hose |
| 3 | Air cleaner | 7 | Air cleaner bracket |
| 4 | Air hose | 8 | Intake pipe |

# AIR CLEANER

## DESCRIPTION

EN0110603D100003

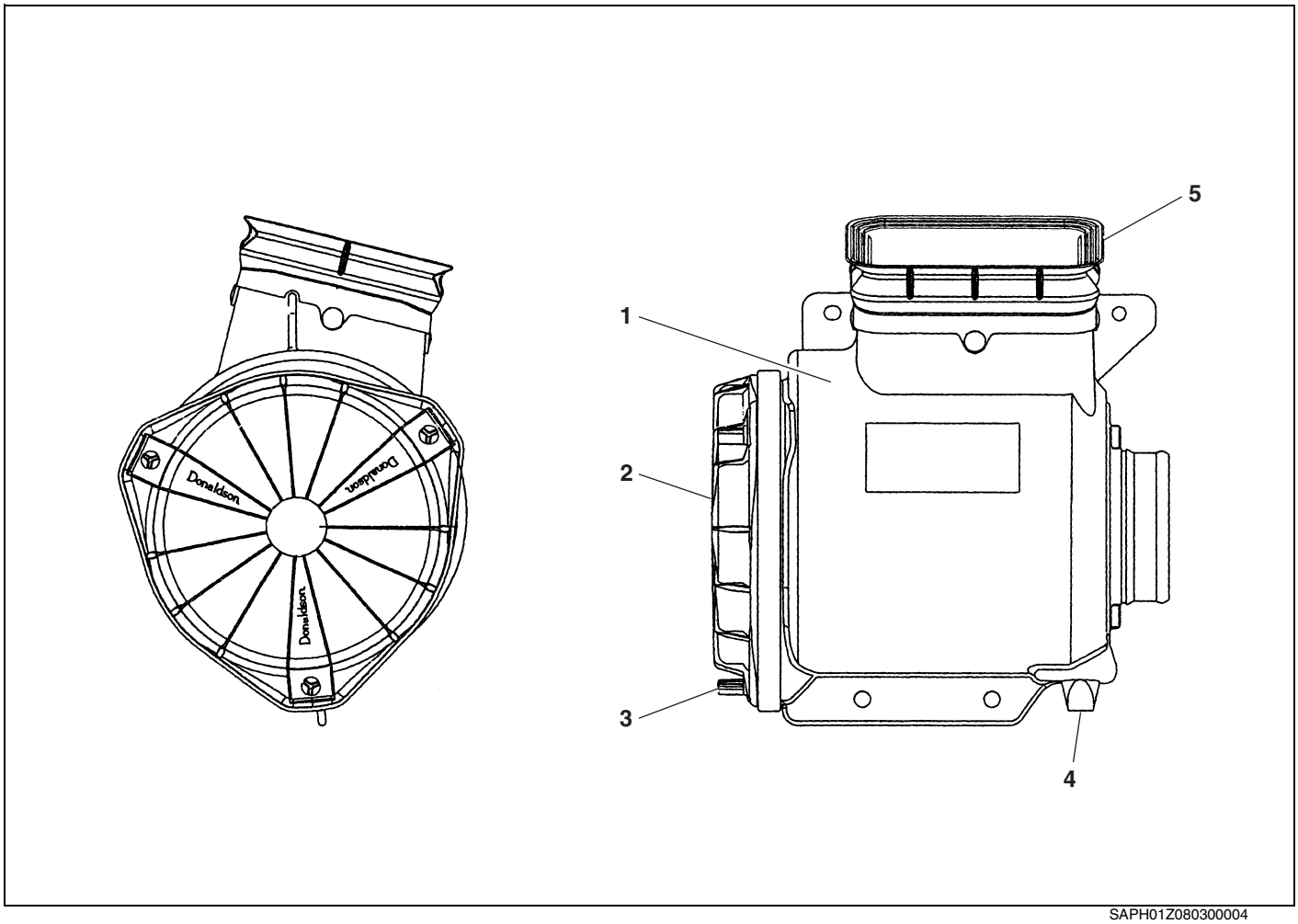


SAPH01Z080300004

| | | | |
|---|---|---|---|
| 1 | Body assembly | 4 | Unloader valve |
| 2 | Cover | 5 | Adapter |
| 3 | Thumb screw | | |

# OVERHAUL

EN0110603H100002

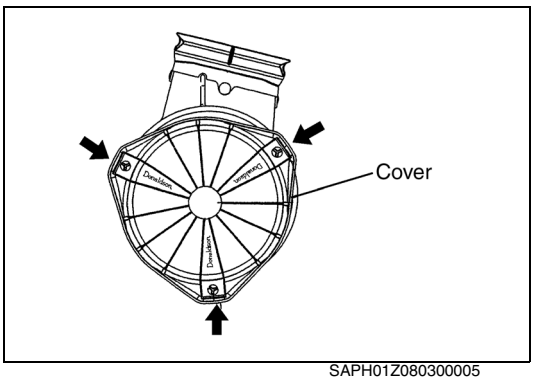


SAPH01Z080300005

## IMPORTANT POINTS - DISMOUNTING

**1. REMOVE THE AIR CLEANER ELEMENT.**

(1) Remove the thumb screw as shown in the figure and remove the cover.

(2) Hold the outer projection end of the element and turn slightly, then detach the element.

**⚠ CAUTION**

- **Never clean the element filter.**
- **When the element filter is subjected to blowing with compressed air, is washed, hit, or dropped, the filter function will be impaired and engine damage can be caused.**

## IMPORTANT POINTS - MOUNTING

**1. INSTALL THE AIR CLEANER ELEMENT.**

(1) Install in the reverse order of removing.

**NOTICE**

**Ensure the cover over the thumb screw is properly affixed.**

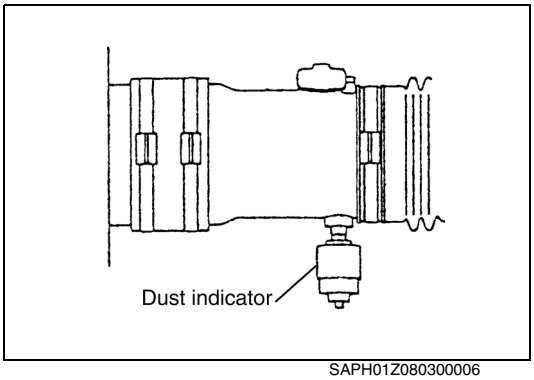


SAPH01Z080300006

## IMPORTANT POINTS - INSPECTION

**1. INSPECTING**

(1) If on inspection the dust indicator is red replace it.

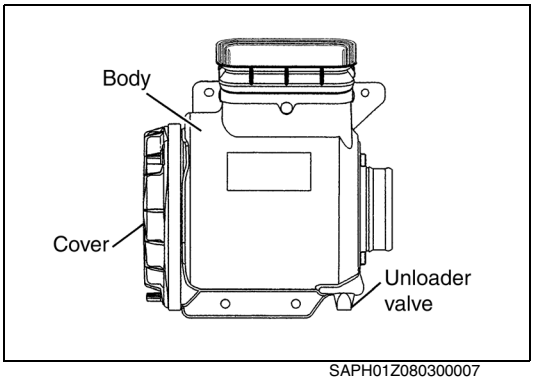


SAPH01Z080300007

(2) If the cover, case or unloader valve is damaged, replace the part.

(3) Check the element to see if it is flattened or deformed, or whether the filter paper of the element is torn.

(4) Check to see if the sealing of the gasket is complete.

**⚠ CAUTION**

**If an abnormality is found during the above inspection, replace the element with a new one. If dust is taken into the engine, the engine will wear and its performance will deteriorate.**

# AIR HOSE

## COMPONENT LOCATOR

EN0110603D100004

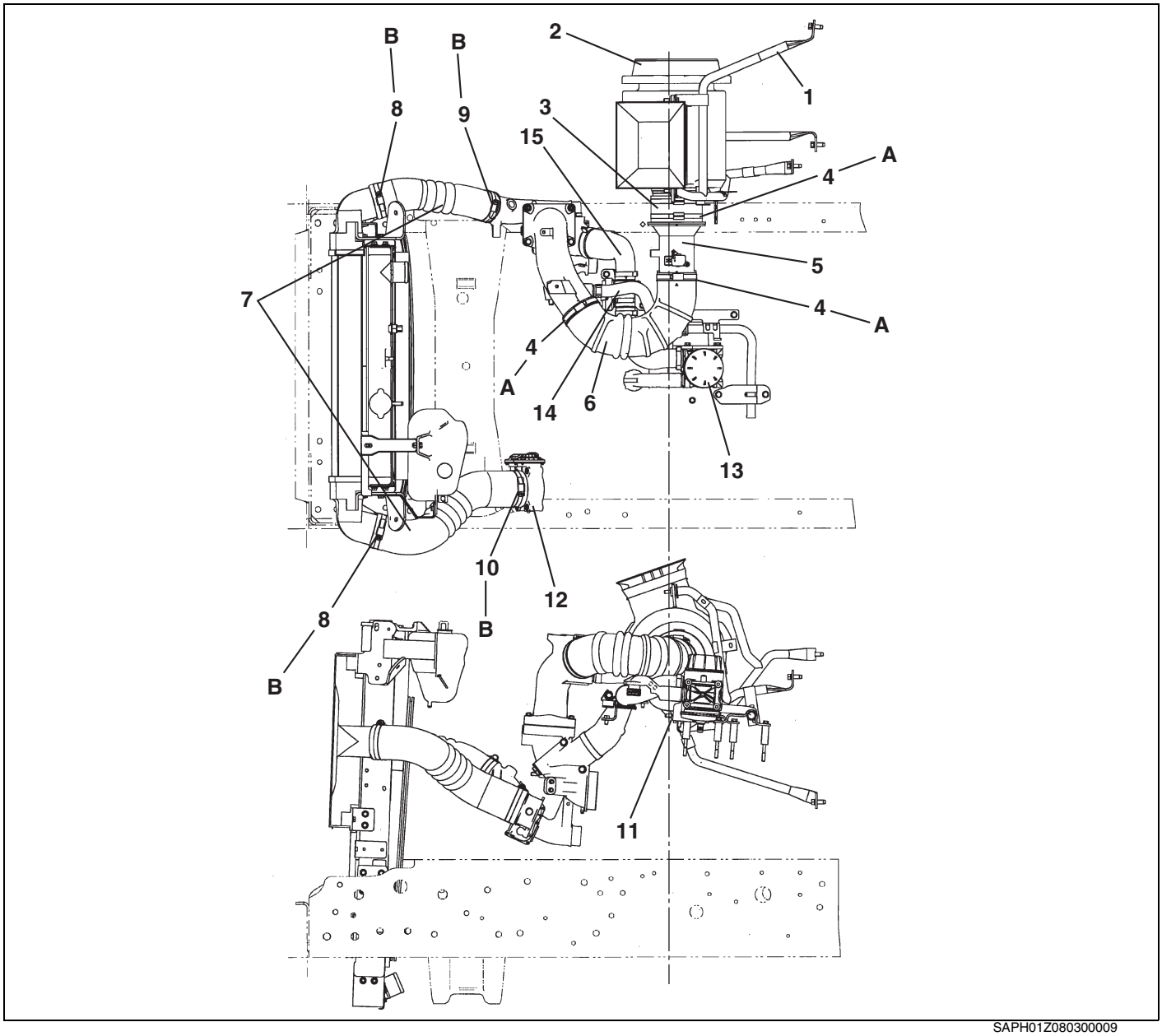


SAPH01Z080300009

| | | | |
|---|---|---|---|
| 1 | Air cleaner bracket | 9 | Clamp (B) |
| 2 | Air cleaner | 10 | Clamp (B) |
| 3 | Air hose | 11 | Dust indicator |
| 4 | Clamp (A) | 12 | Intake throttle valve |
| 5 | Intake pipe | 13 | Separator |
| 6 | Air hose | 14 | Air hose |
| 7 | Air hose (Intercooler) | 15 | Air hose (Separator) |
| 8 | Clamp (B) | | |

**Tightening torque** **Unit: N·m {kgf·cm, lbf·ft}**

| | | | |
|---|---|---|---|
| A | 4.5-5.5 {46-56, 3.3-4.1} | B | 6.8-8.4 {70-85, 5.0-6.2} |

# OVERHAUL

EN0110603H100003

## IMPORTANT POINTS - MOUNTING

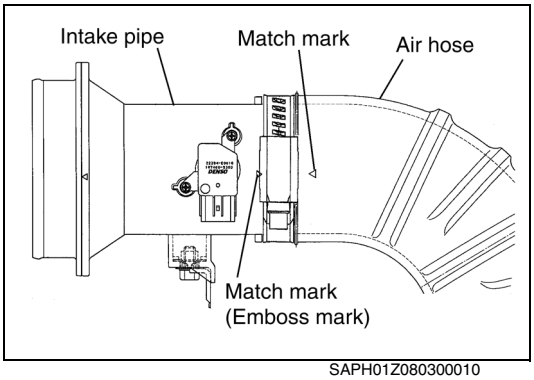


SAPH01Z080300010

**1. INSTALL THE AIR HOSE.**

(1) Location of the rotation direction of the intake pipe and the air hose should match emboss mark as shown in the figure.

(2) Tighten the clamp.
**Tightening Torque:**
**4.5-5.5 N·m {46-56 kgf·cm, 3.3-4.1 lbf·ft}**

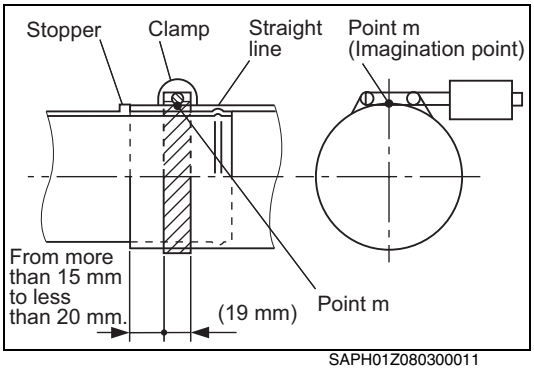


SAPH01Z080300011

**2. INSTALL THE AIR HOSE (INTER COOLER).**

(1) Install the air hose against the stopper as shown in the figure.

(2) Match the straight line mark of the air hose and match mark (stopper) center of the intercooler.

(3) Set the point m of the clamp to blue circle mark on hose and tighten with the following tightening torque.
**Tightening Torque:**
**6.8-8.4 N·m {70-85 kgf·cm, 5.0-6.2 lbf·ft}**

# AIR FLOW SENSOR

## COMPONENT LOCATOR

EN0110603D100005

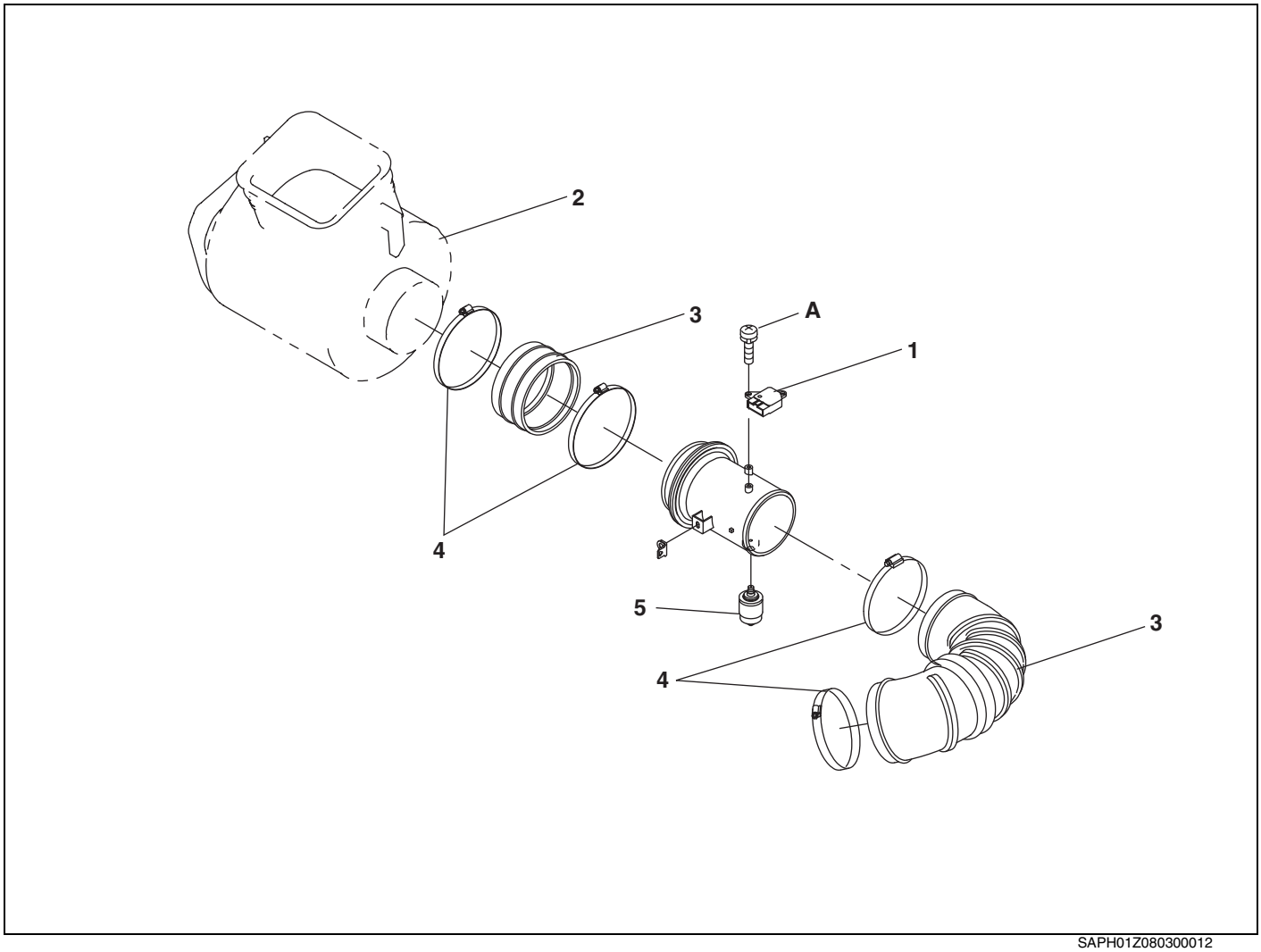


SAPH01Z080300012

| | | | |
|---|---|---|---|
| 1 | Air flow sensor | 4 | Clamp |
| 2 | Air cleaner | 5 | Dust indicator |
| 3 | Air hose | | |

**Tightening torque** **Unit: N·m {kgf·cm, lbf·ft}**

| | | | |
|---|---|---|---|
| A | 1.17-1.77 {12-17, 0.9-1.3} | | |

# REPLACEMENT

EN0110603H300001

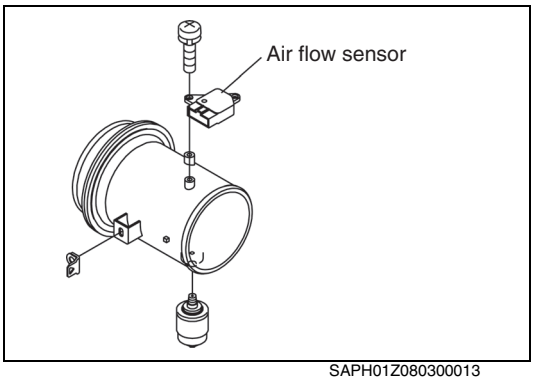

SAPH01Z080300013

**1. REMOVE THE AIR FLOW SENSOR.**

(1) Disconnect the connector of the air flow sensor.
(2) Remove a bolt to remove the air flow sensor.

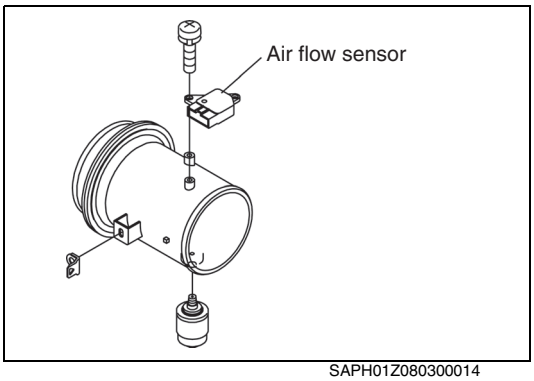

SAPH01Z080300014

**2. INSTALL THE AIR FLOW SENSOR.**

(1) Install the air flow sensor, and tighten a bolt.
**Tightening Torque:**
**1.17-1.77 N·m {12-18 kgf·cm, 0.9-1.3 lbf·ft}**

**NOTICE**

- **Do not apply an excessive torque in tightening the mounting bolt (M4) for air flow sensor.**
- **The connector of the air flow sensor must be positioned in the frontward direction of the vehicle.**

(2) Connect the connector of the air flow sensor.

# BOOST PRESSURE SENSOR

## COMPONENT LOCATOR

EN0110603D100006

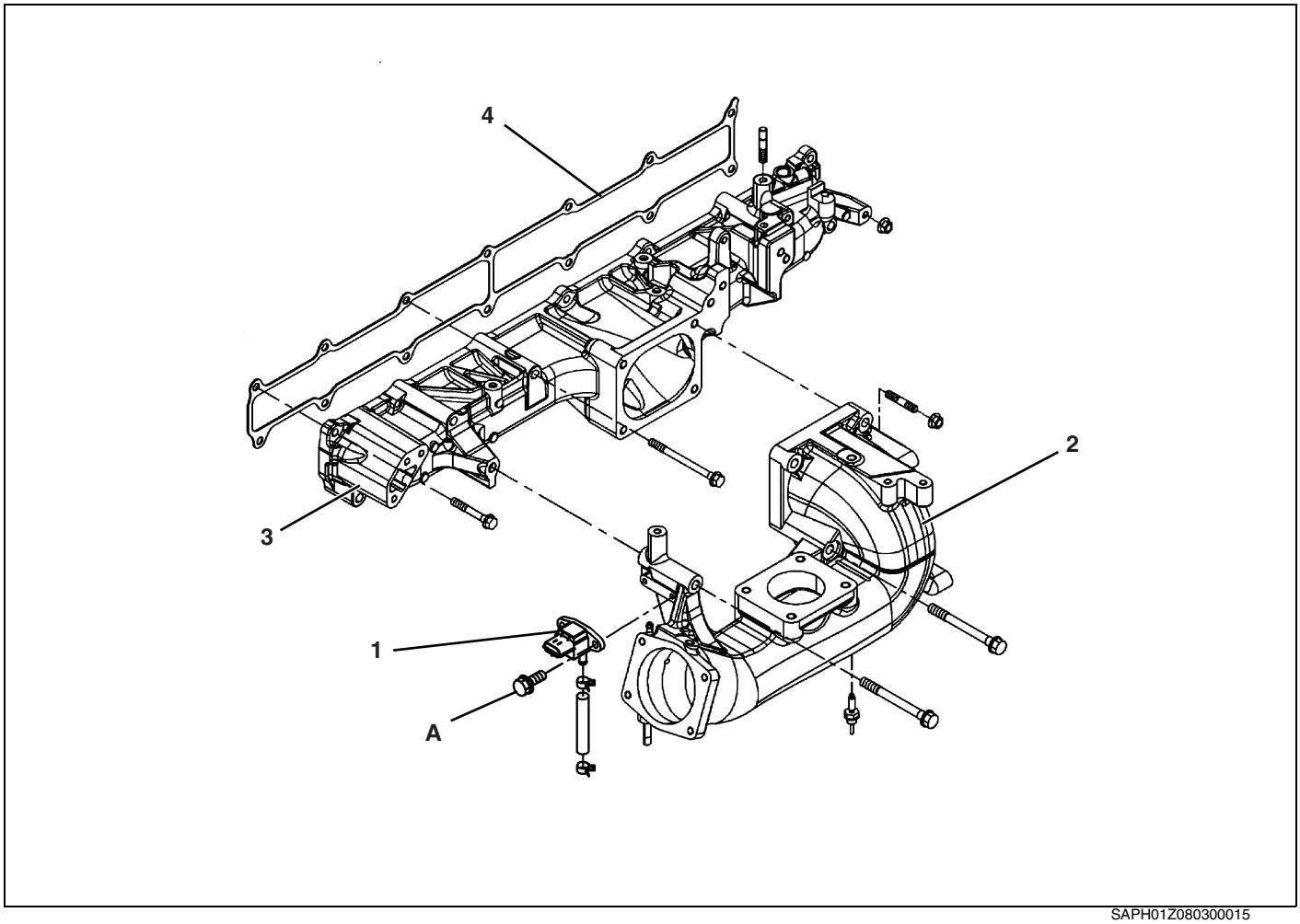


SAPH01Z080300015

| | | | |
|---|---|---|---|
| 1 | Boost pressure sensor | 3 | Intake manifold |
| 2 | Intake pipe | 4 | Intake manifold gasket |

**Tightening torque** **Unit: N·m {kgf·cm, lbf·ft}**

| | | | |
|---|---|---|---|
| A | 10 {102, 7.3} | | |

# REPLACEMENT

EN0110603H300002

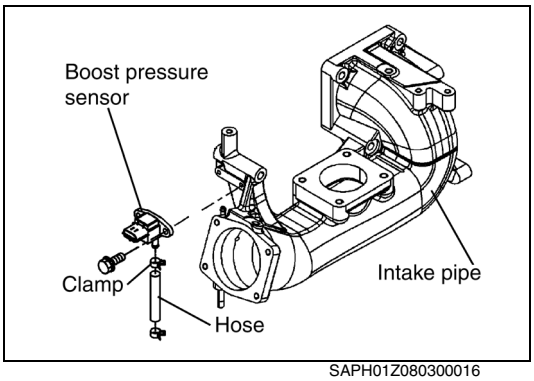


SAPH01Z080300016

**1. REMOVE THE BOOST PRESSURE SENSOR.**

(1) Disconnect the connector of the boost pressure sensor.

(2) Remove two clamps to remove the hose from the boost pressure sensor.

(3) Remove two bolts to remove the boost pressure sensor from the intake pipe.

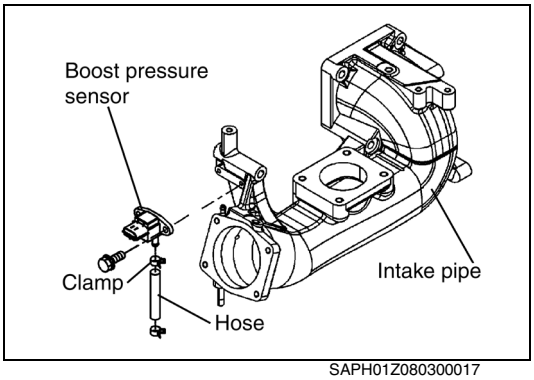


SAPH01Z080300017

**2. INSTALL THE BOOST PRESSURE SENSOR**

(1) Install the boost pressure sensor to the intake pipe, and tighten two bolts.
**Tightening Torque:**
**10 N·m {102 kgf·cm, 7.3 lbf·ft}**

(2) Insert a hose into the boost pressure sensor, and fasten two clamps.

(3) Connect the connector of the boost pressure sensor.

# EXHAUST SYSTEM (J08E)

EN04-001

**EXHAUST MANIFOLD AND PIPE..... EN04-2**
COMPONENT LOCATOR..... EN04-2
DISMOUNTING AND MOUNTING ..... EN04-3

**EXHAUST PIPE AND MUFFLER UNIT .... EN04-4**
DESCRIPTION ..... EN04-4
COMPONENT LOCATOR..... EN04-5
REPLACEMENT OF ATC ..... EN04-11
OVERHAUL ..... EN04-13

**DPR (DIESEL PARTICULATE ACTIVE REDUCTION SYSTEM) ..... EN04-29**
SYSTEM CONFIGURATION ..... EN04-29
STRUCTURE OF DPR-CLEANER ..... EN04-30
DPR INSPECTION ..... EN04-31
INSPECTION PROCEDURE FOLLOWED WHEN "DPR MAINTENANCE" IS DISPLAYED ON THE INFORMATION DISPLAY ..... EN04-32
INSPECTION BY WAY OF HINO DX II ..... EN04-33
INSPECTION PROCEDURE FOLLOWED WHEN CHECK ENGINE LIGHT ILLUMINATES (ABNORMAL) ..... EN04-37
DETERMINATION BY WAY OF DPR STATE DETERMINATION MONITOR OF HINO DX II ..... EN04-40
CHECKING THE DPR STATE ..... EN04-40
REPLACEMENT OF DPR FILTER ..... EN04-41
OVERALL OPERATION FLOW ..... EN04-45

**DIFFERENTIAL PRESSURE SENSOR.. EN04-53**
COMPONENT LOCATOR..... EN04-53
DISMOUNTING AND MOUNTING ..... EN04-54
INSPECTION AND REPAIR ..... EN04-54

**AFTERTREATMENT FUEL INJECTOR.. EN04-57**
COMPONENT LOCATOR..... EN04-57
OVERHAUL ..... EN04-58

**EXHAUST CONTROL CYLINDER..... EN04-68**
SYSTEM CONFIGURATION ..... EN04-68
DPR INSPECTION CHECK SHEET..... EN04-69

**EXHAUST GAS TEMPERATURE SENSOR 1 (ATC UPSTREAM) AND EXHAUST GAS TEMPERATURE SENSOR 2 (ATC DOWNSTREAM)..... EN04-72**
COMPONENT LOCATOR ..... EN04-72
OVERHAUL ..... EN04-73

# EXHAUST MANIFOLD AND PIPE

## COMPONENT LOCATOR

EN01Z0804D100001

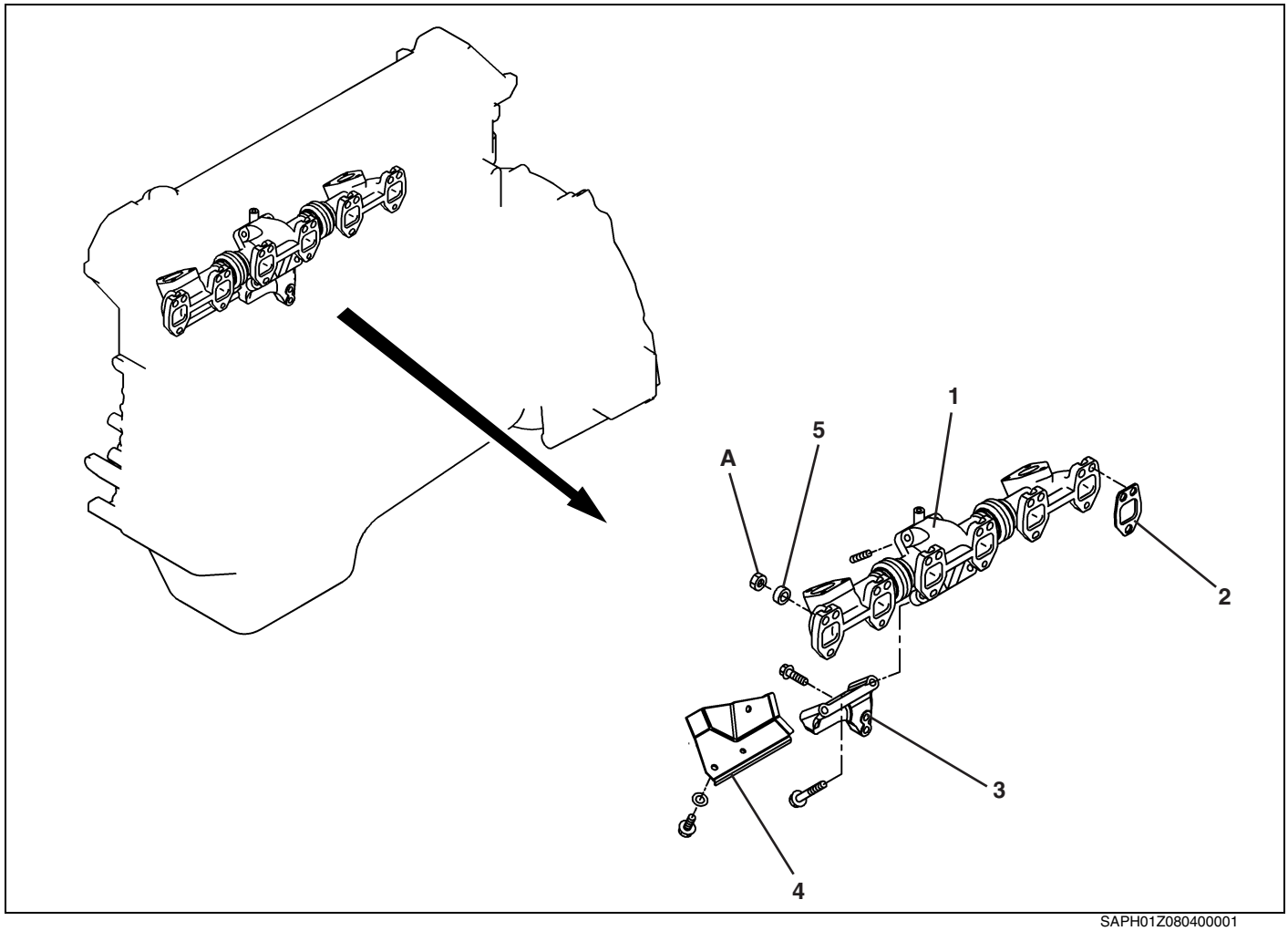


SAPH01Z080400001

| | | | |
|---|---|---|---|
| 1 | Exhaust manifold sub assembly | 4 | Heat insulator |
| 2 | Gasket * | 5 | Spacer |
| 3 | Bracket | | |

*: Nonreusable. Be sure to use new parts.

Tightening torque — Unit: N·m {kgf·cm, lbf·ft}

| | | | |
|---|---|---|---|
| A | 65 {660, 48} | | |

# DISMOUNTING AND MOUNTING

EN01Z0804H100001

## IMPORTANT POINT - MOUNTING

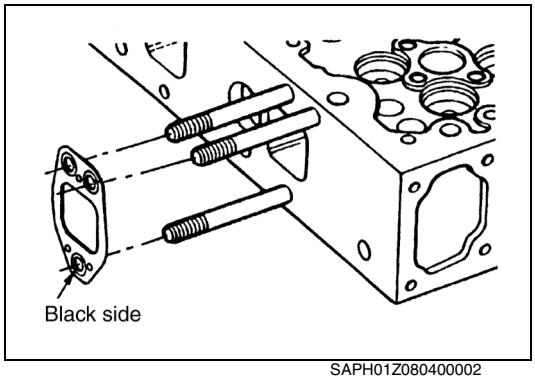


SAPH01Z080400002

**1. INSTALL THE EXHAUST MANIFOLD GASKET.**

**NOTICE**

**Since the exhaust manifold gasket must be installed in one way, install the gasket with the black side facing toward the exhaust manifold.**

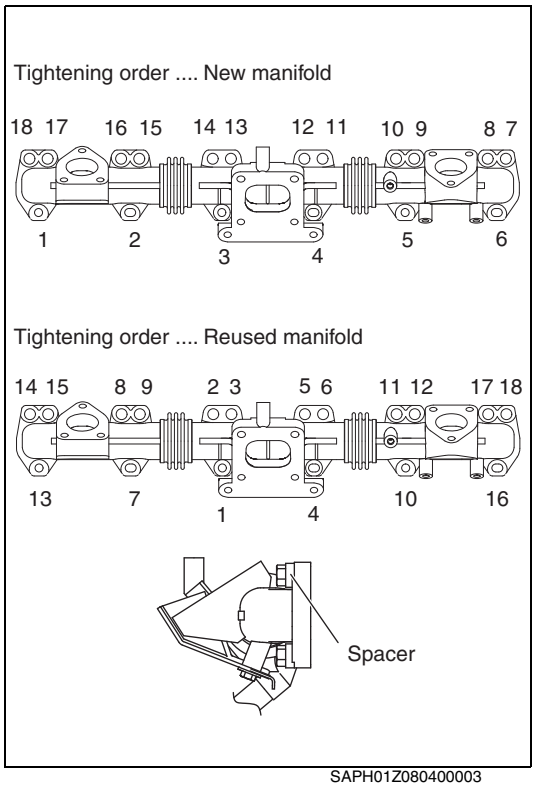


SAPH01Z080400003

**2. INSTALL THE EXHAUST MANIFOLD.**

(1) Install the exhaust manifold onto the cylinder head and tighten the mounting nut in the order shown in the figure to the specified torque.
**Tightening Torque:**
**65 N·m {660 kgf·cm, 48 lbf·ft}**

(2) Retighten the same nuts according to the same procedure again.

**NOTICE**

**Be sure to carry out the procedure.**

# EXHAUST PIPE AND MUFFLER UNIT

## DESCRIPTION

EN01Z0804H200001

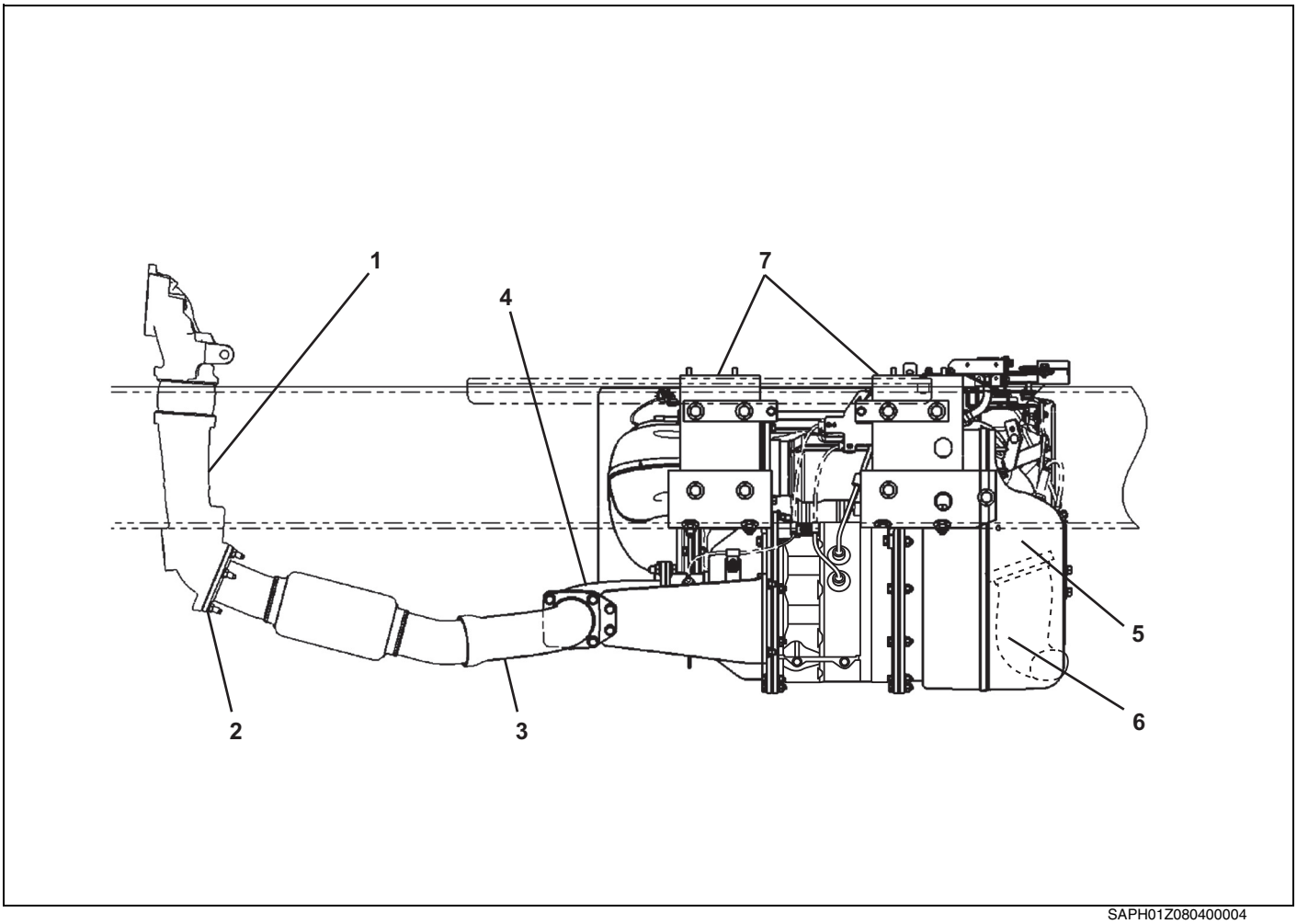


SAPH01Z080400004

| | | | |
|---|---|---|---|
| 1 | Exhaust pipe No.1 (ATC) | 5 | Muffler unit |
| 2 | Gasket * | 6 | Tail pipe |
| 3 | Exhaust pipe No.2 | 7 | Bracket sub assembly |
| 4 | Exhaust pipe No.3 | | |

***: Nonreusable. Be sure to use new parts.**

# COMPONENT LOCATOR

EN01Z0804D100002

## EXHAUST PIPE

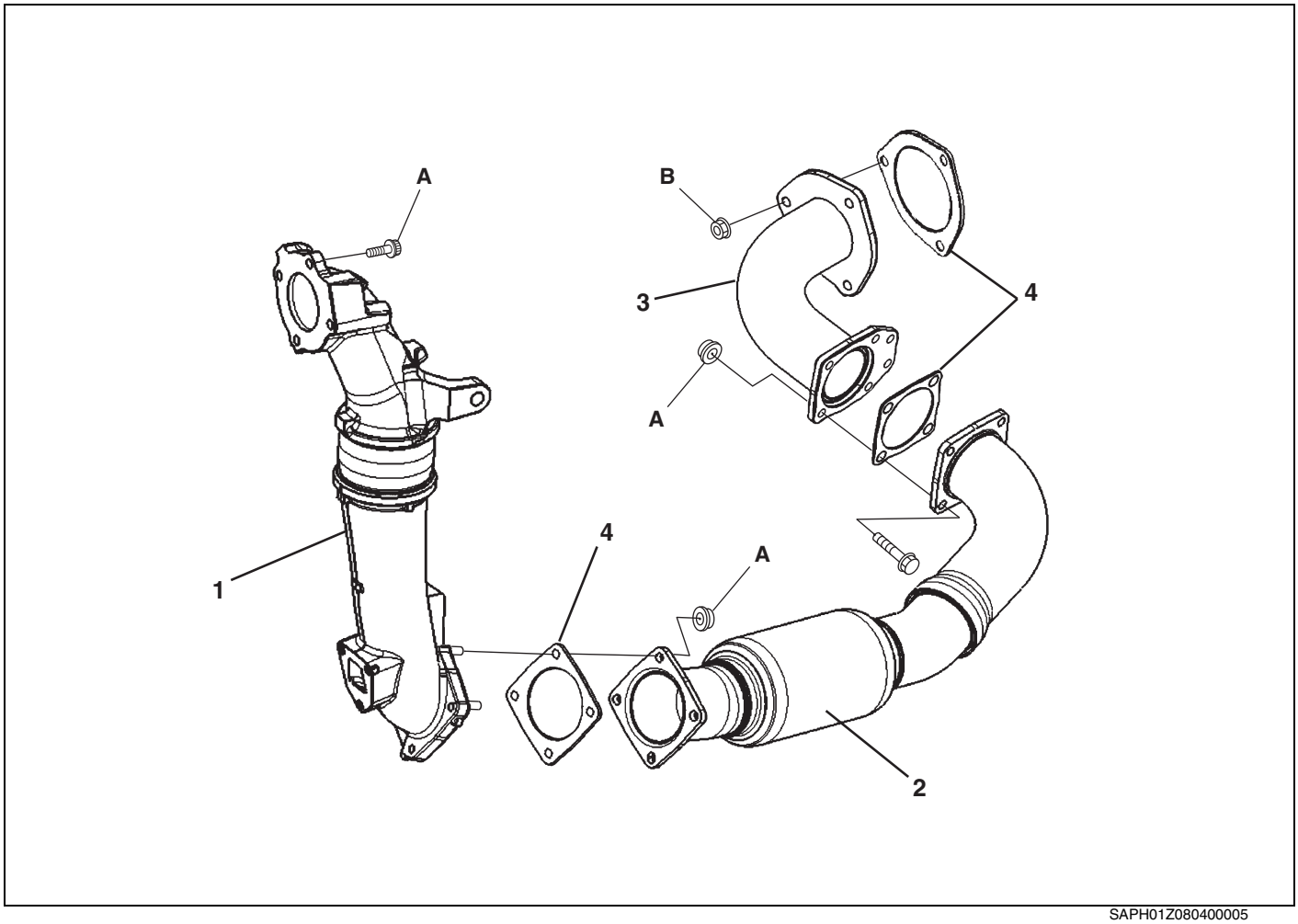


SAPH01Z080400005

| | | | |
|---|---|---|---|
| 1 | Exhaust pipe No.1 (ATC) | 3 | Exhaust pipe No.3 |
| 2 | Exhaust pipe No.2 | 4 | Gasket * |

*: Nonreusable. Be sure to use new parts.

Tightening torque — Unit: N·m {kgf·cm, lbf·ft}

| | | | |
|---|---|---|---|
| A | 56-84 {571-856, 42-62} | B | 120 {1220, 88} |

## MUFFLER UNIT

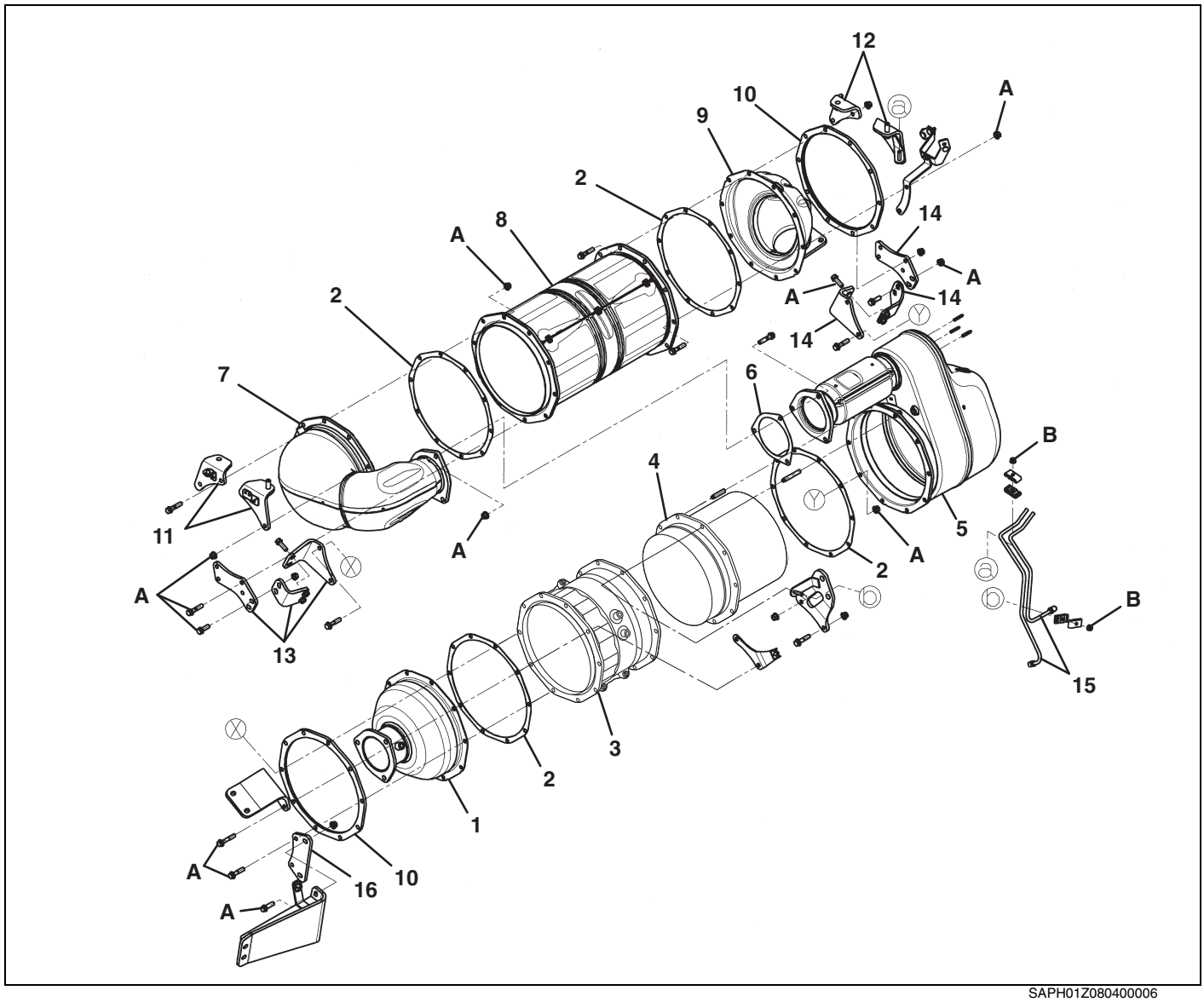


SAPH01Z080400006

| | | | |
|---|---|---|---|
| 1 | Inlet chamber sub assembly | 9 | Outlet chamber sub assembly |
| 2 | Gasket * | 10 | Flange |
| 3 | Particulate filter assembly (DOC) | 11 | Support (Front) |
| 4 | Particulate filter sub assembly (DPR filter) | 12 | Support (Rear) |
| 5 | Chamber sub assembly (Rear) | 13 | Bracket (Front) |
| 6 | Gasket * | 14 | Bracket (Rear) |
| 7 | Chamber sub assembly (Front) | 15 | Differential pressure pipe |
| 8 | Monolithic converter assembly | 16 | Exhaust pipe bracket support |

***: Nonreusable. Be sure to use new parts.**

**Tightening torque** **Unit: N·m {kgf·cm, lbf·ft}**

| | | | |
|---|---|---|---|
| A | 64 {653, 47} | M8: | 23-32 {234-327, 17-24} |
| B | 6.4-9.6 {65-98, 4.1-7.1} | | |

## MUFFLER SUPPORT

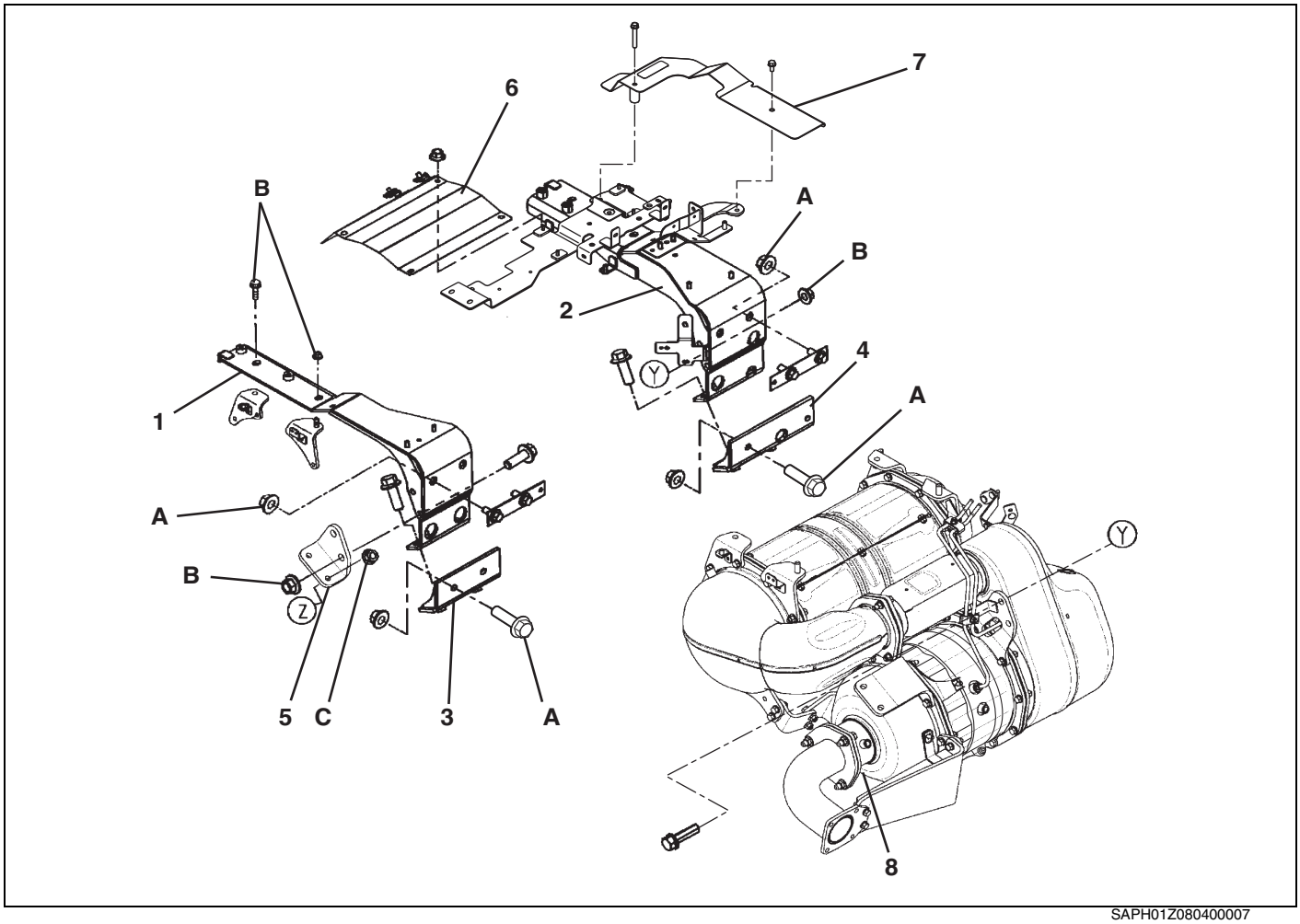


SAPH01Z080400007

| | | | |
|---|---|---|---|
| 1 | Support sub assembly (Front) | 5 | Bracket |
| 2 | Support sub assembly (Rear) | 6 | Insulator |
| 3 | Support sub assembly (Front, lower) | 7 | Protector |
| 4 | Support sub assembly (Rear, lower) | 8 | Muffler unit |

**Tightening torque** **Unit: N·m {kgf·cm, lbf·ft}**

| | | | |
|---|---|---|---|
| A | 80-120 {816-1,223, 59-88} | C | 33-59 {337-602, 24-44} |
| B | 69-103 {704-1,050, 51-76} | M8: | 18-26 {184-265, 14-19} |

## TAIL PIPE (SHORT TAIL TYPE)

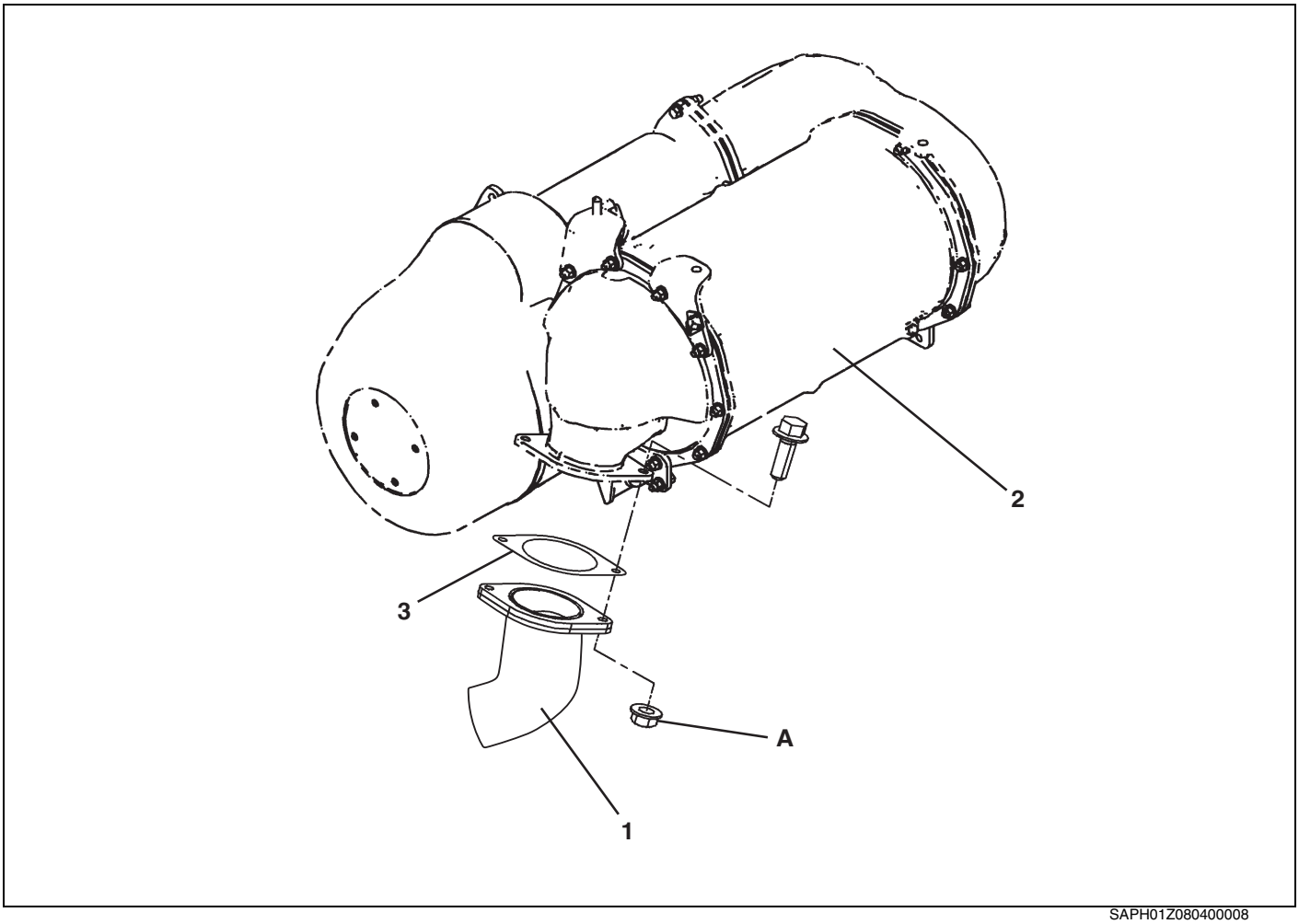


SAPH01Z080400008

| | | | |
|---|---|---|---|
| 1 | Tail pipe | 3 | Gasket * |
| 2 | Muffler unit | | |

*: Nonreusable. Be sure to use new parts.

Tightening torque — Unit: N·m {kgf·cm, lbf·ft}

| | | | |
|---|---|---|---|
| A | 108-132 {1,101-1,346, 80-97} | | |

## TAIL PIPE (STACK TYPE)

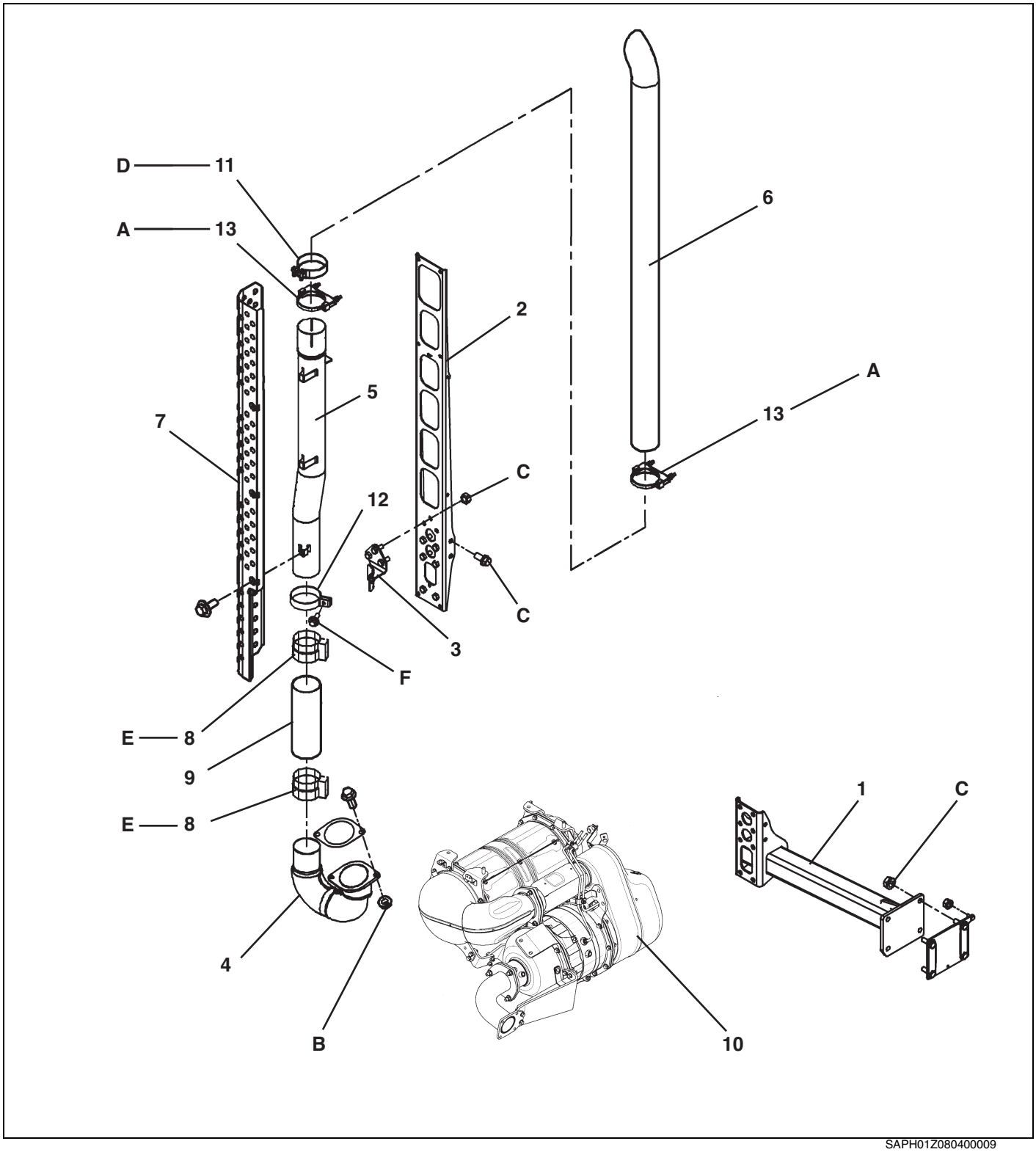


SAPH01Z080400009

| | | | |
|---|---|---|---|
| 1 | Bracket sub assembly | 8 | Clamp * |
| 2 | Exhaust pipe bracket | 9 | Exhaust flexible pipe |
| 3 | Bracket | 10 | Muffler unit |
| 4 | Tail pipe sub assembly | 11 | Clamp * |
| 5 | Tail pipe sub assembly | 12 | Clamp |
| 6 | Tail pipe | 13 | U-bolt |
| 7 | Insulator | | |

***: Nonreusable. Be sure to use new parts.**

**Tightening torque** **Unit: N·m {kgf·cm, lbf·ft}**

| | | | |
|---|---|---|---|
| A | 36-44 {367-448, 27-32} | E | 60-80 {612-815, 45-59} |
| B | 108-132 {1,102-1,346, 80-97} | F | 20.4-30.4 {208-310, 15-22} |
| C | 130-158 {1,326-1,611, 96-116} | M8: | 18-26 {184-265, 14-19} |
| D | 37-50 {378-509, 28-36} | | |

# REPLACEMENT OF ATC

EN01Z0804H100002

## REMOVE THE EXHAUST PIPE No.1 (ATC)

**NOTICE**
**The ATC will have to be replaced together with the exhaust pipe No.1 (ATC).**

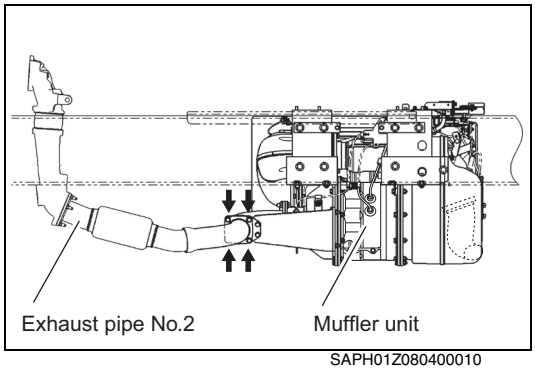

SAPH01Z080400010

**1. REMOVE THE EXHAUST PIPE No.2**

(1) Remove the bolts and nuts on the flange on the muffler unit side.

**2. REMOVE THE AFTERTREATMENT FUEL INJECTOR**
**Reference: EXHAUST SYSTEM (J08E), AFTERTREATMENT FUEL INJECTOR, OVERHAUL, REMOVING THE AFTERTREATMENT FUEL INJECTOR (Page EN04-58)**

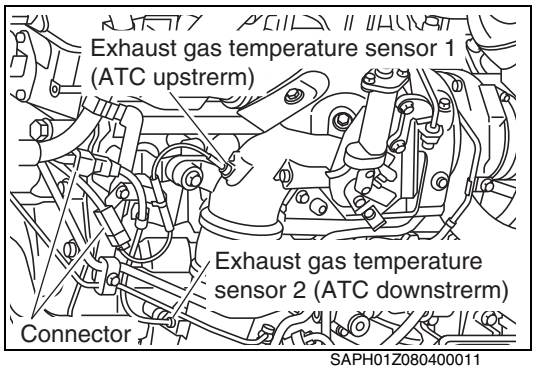

SAPH01Z080400011

**3. DISCONNECT THE EXHAUST GAS TEMPERATURE SENSOR 1 (ATC UPSTREAM) OF CONNECTOR AND EXHAUST GAS TEMPERATURE SENSOR 2 (ATC DOWNSTREAM) OF CONNECTOR**

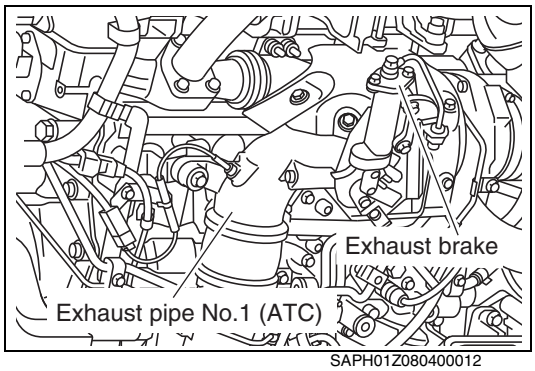

SAPH01Z080400012

**4. REMOVE THE EXHAUST PIPE No.1 (ATC)**

(1) Unfasten the bolts (4 pcs.) to remove the bracket from the exhaust pipe No.1 (ATC).
(2) Unfasten the nuts (3 pcs.) to remove the exhaust pipe No.1 (ATC) and gasket from the exhaust brake.

## MOUNTING THE EXHAUST PIPE No.1 (ATC)

**NOTICE**

**The ATC will have to be replaced together with the exhaust pipe No.1 (ATC).**

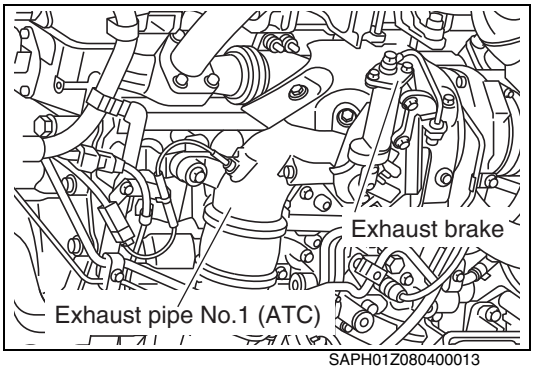

SAPH01Z080400013

**1. MOUNTING THE EXHAUST PIPE No.1 (ATC)**

(1) Replace with a new gasket and temporarily tighten the exhaust pipe No.1 (ATC) to the exhaust brake with nuts (4 pcs.).
(2) Temporarily tighten the bracket with the bolts.
(3) Tighten the bracket fully.
**Tightening Torque:**
**55 N·m {560 kgf·cm, 40.6 lbf·ft}**

(4) Tighten the exhaust pipe No.1 (ATC) fully.
**Tightening Torque:**
**70 N·m {714 kgf·cm, 51.6 lbf·ft}**

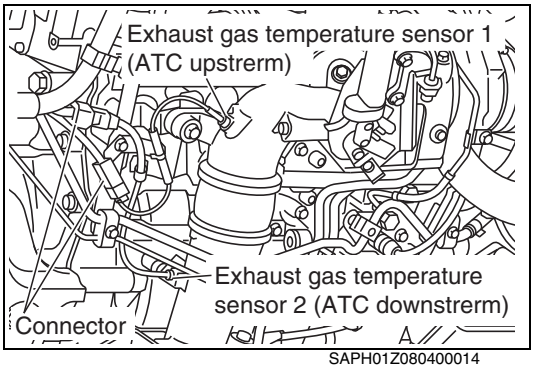

SAPH01Z080400014

**2. CONNECT THE EXHAUST GAS TEMPERATURE SENSOR 1 (ATC UPSTREAM) OF CONNECTOR AND EXHAUST GAS TEMPERATURE SENSOR 2 (ATC DOWNSTREAM) OF CONNECTOR**

**3. MOUNTING THE AFTERTREATMENT FUEL INJECTOR**
**Reference: EXHAUST SYSTEM (J08E), AFTERTREATMENT FUEL INJECTOR, OVERHAUL, MOUNTING AFTERTREATMENT FUEL INJECTOR (Page EN04-58)**

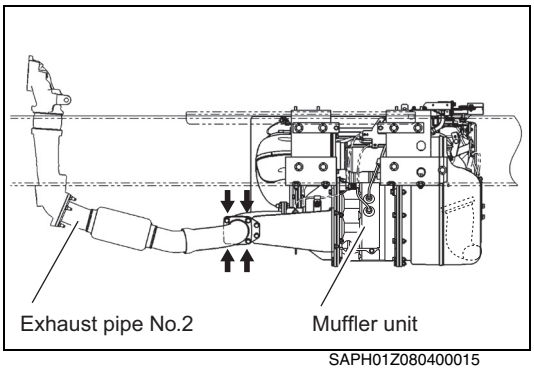

SAPH01Z080400015

**4. CONNECTING THE EXHAUST PIPE No.2**

(1) Tighten the exhaust pipe No.2 fully.
**Tightening Torque:**
**56-84 N·m {571-856 kgf·cm, 41.3-61.9 lbf·ft}**

# OVERHAUL

EN01Z0804H200002

## IMPORTANT POINT - DISMOUNTING

**⚠ WARNING**
**Do not touch the exhaust manifold when it could be hot. You can be severely burned.**

**1. DISMOUNTING**
(1) Disconnect the battery ground terminal.

**⚠ CAUTION**
**Be sure to disconnect the battery terminals from the battery in accordance with the procedures in this manual and never use the battery disconnect switch when it is necessary to break the supply of electricity completely. Otherwise, electricity may remain supplied from the battery by the circuit that bypasses the battery disconnect switch and you may get burns or injury from the electricity.**

(2) Remove the step (top) and the insulator on the right side of the vehicle.

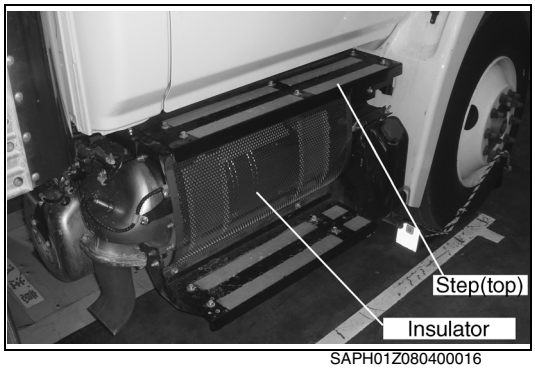

SAPH01Z080400016

(3) Remove the harness clamp.

(4) Disconnect the connector connected to the injector.

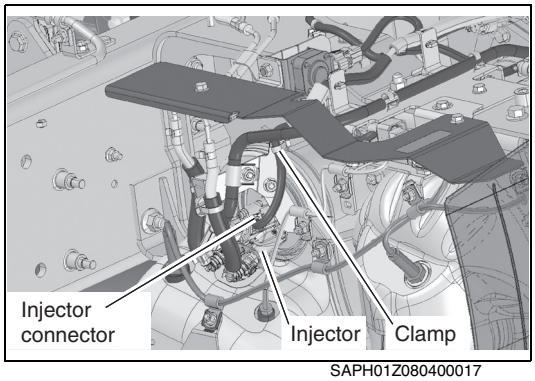

SAPH01Z080400017

(5) Disconnect the clamps (2 pcs.) and the coolant hose connected to the injector.

**NOTICE**
**When the coolant hose is disconnected, coolant will flow out. Drain coolant beforehand or plug the end of the pipe.**

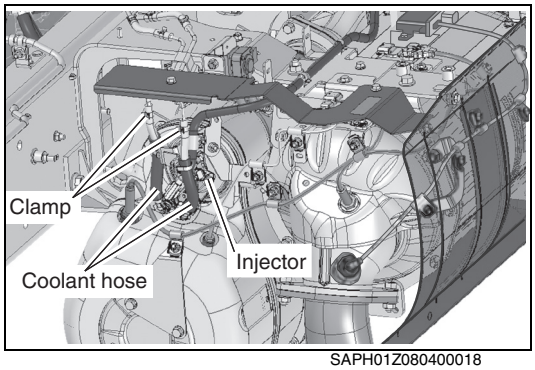

SAPH01Z080400018

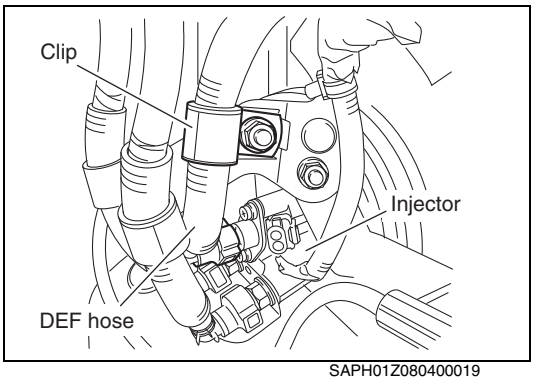

SAPH01Z080400019

(6) Remove the clip and the DEF hose from the injector.

**NOTICE**

**After removing the clip and the DEF hose, do not allow foreign matter to infiltrate the pipe.**

**HINT**

**Remove the DEF hose by pushing inward the white knobs (2 pcs.) of the connector.**

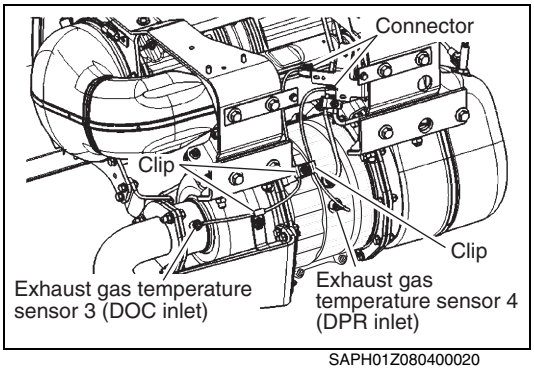

SAPH01Z080400020

(7) Disconnect the connector connected to the exhaust gas temperature sensor 3 (DOC inlet) and the exhaust gas temperature sensor 4 (DPR inlet).

(8) Remove the clips (3 pcs.), and the exhaust temperature sensor 3 (DOC inlet) and the exhaust gas temperature sensor 4 (DPR inlet).

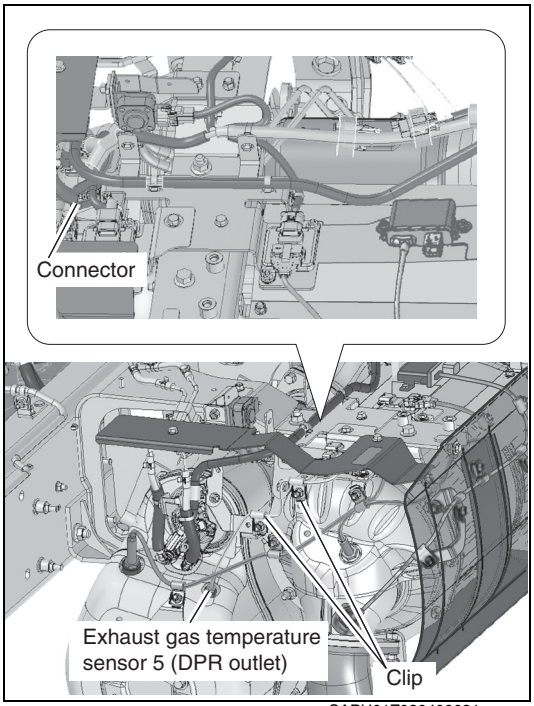

SAPH01Z080400021

(9) Disconnect the connector connected to the exhaust gas temperature sensor 5 (DPR outlet) and remove the clips (2 pcs.).

(10) Remove the exhaust gas temperature sensor 5 (DPR outlet).

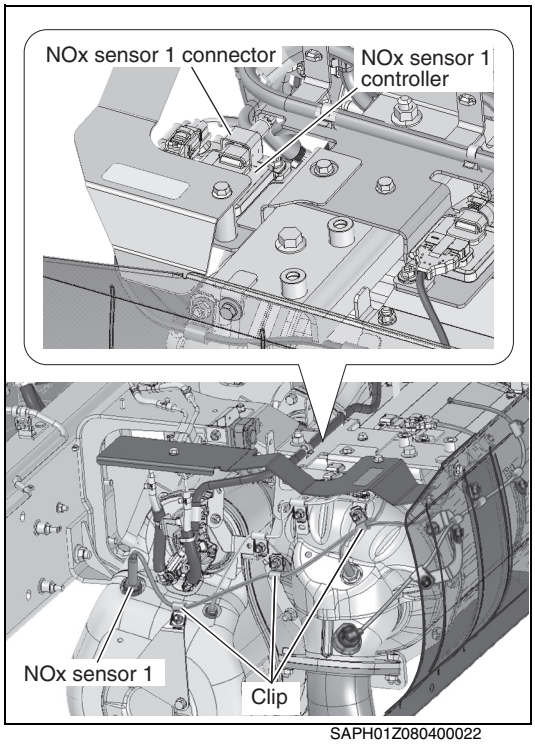

SAPH01Z080400022

(11) Disconnect the NOx sensor 1 controller with the nuts (2 pcs.), and disconnect the connector.
(12) Remove the clips (3 pcs.) and the NOx sensor 1.

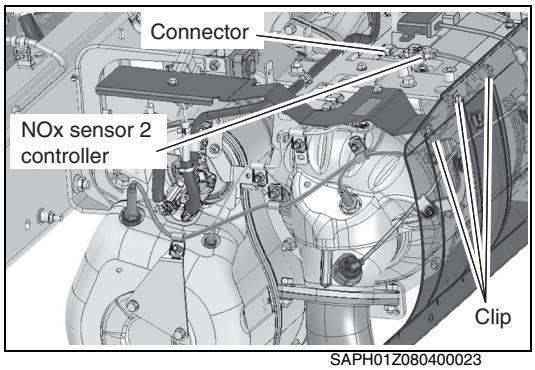

SAPH01Z080400023

(13) Disconnect the connector connected to the NOx sensor 2 controller.
(14) Remove the clips (3 pcs.) and the NOx sensor 2 .

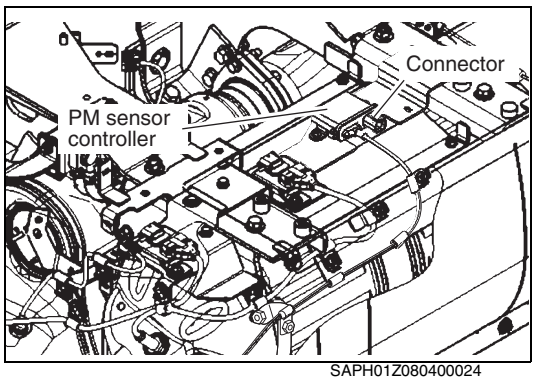

SAPH01Z080400024

(15) Disconnect the connector connected to the PM sensor controller.

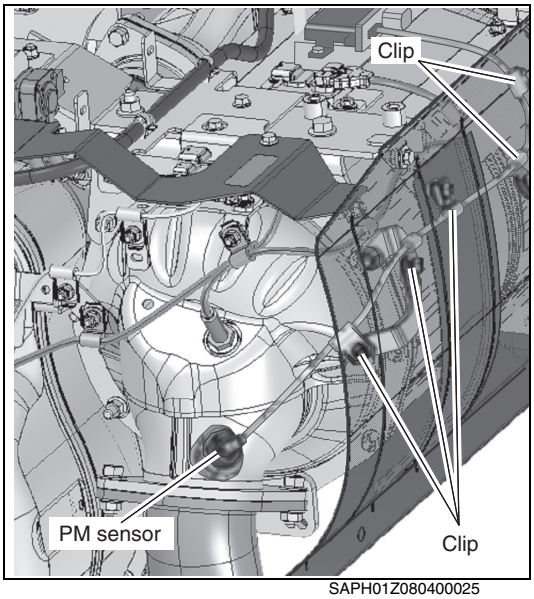

SAPH01Z080400025

(16) Remove the clips (5 pcs.) and the PM sensor.

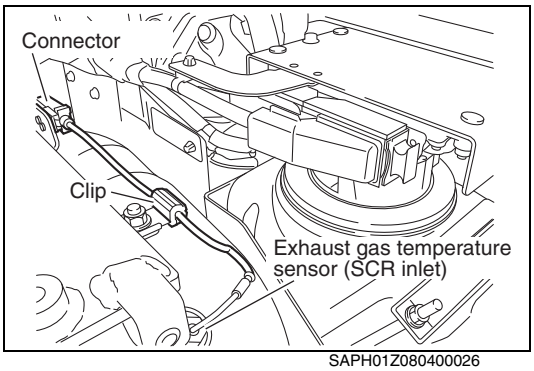

SAPH01Z080400026

(17) Remove the clip and disconnect the connector of exhaust gas temperature sensor (SCR inlet).
(18) Remove the exhaust gas temperature sensor (SCR inlet) .

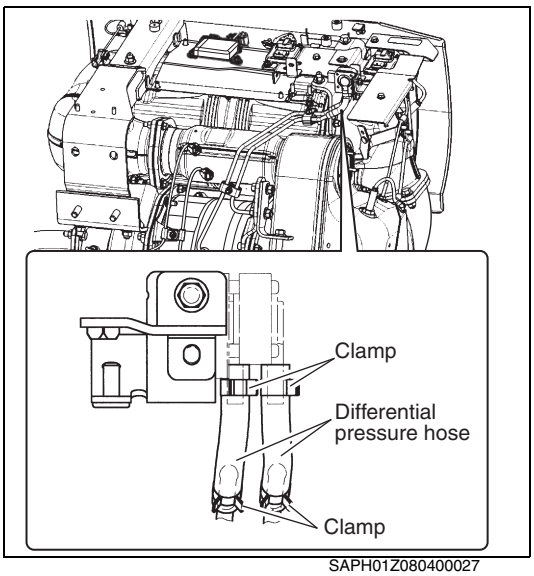

SAPH01Z080400027

(19) Remove the clamps (4 pcs.) and the differential pressure hoses (2 pcs.).

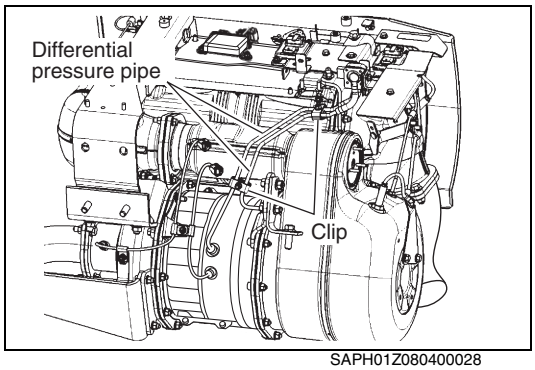


SAPH01Z080400028

(20) Remove the clips (2 pcs.) and the differential pressure pipe.

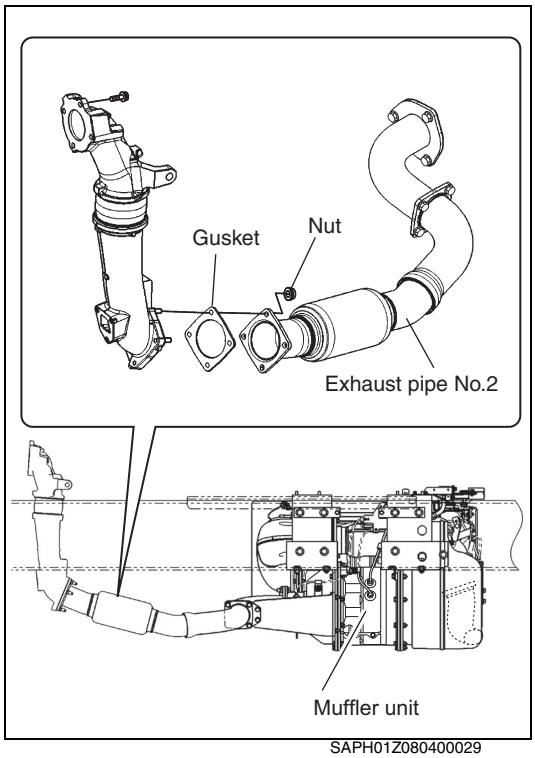


SAPH01Z080400029

(21) Remove the nuts (4 pcs.) of the exhaust pipe No. 2 and gasket.

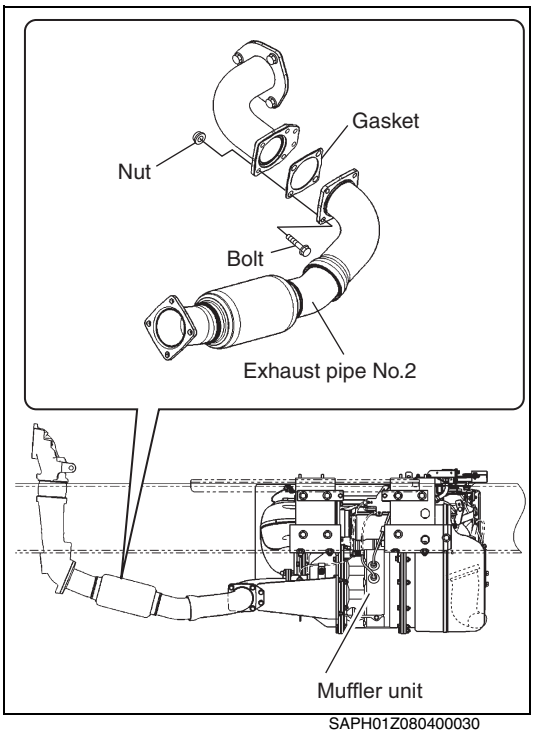

SAPH01Z080400030

(22) Remove the bolts (4 pcs.) and nuts (4 pcs.) of exhaust pipe No. 2 and gasket.

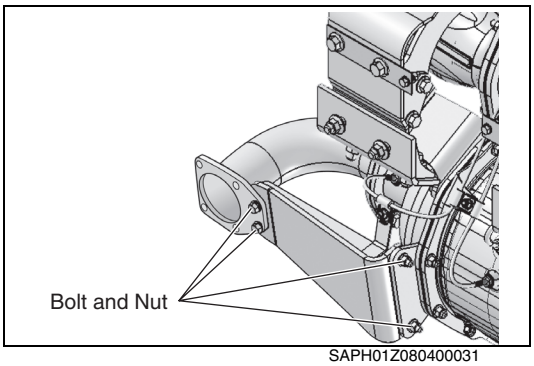

SAPH01Z080400031

(23) Remove the bolts (4 pcs.) and nuts (4 pcs.) of the exhaust pipe bracket from the muffler unit.

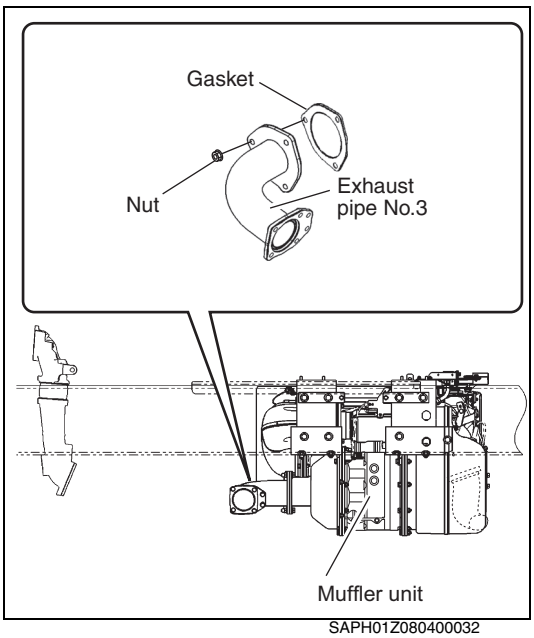

SAPH01Z080400032

(24) Remove the bolts (3 pcs.) and nuts (3 pcs.) of exhaust pipe No. 3 and gasket from the muffler unit.

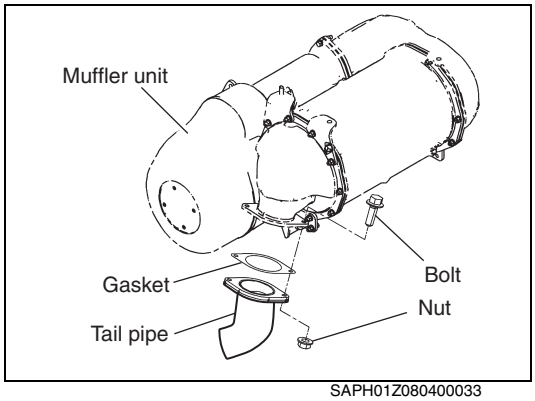

SAPH01Z080400033

(25) Remove the bolts (2 pcs.) and nuts (2 pcs.) of the tail pipe and the gasket from the muffler unit.

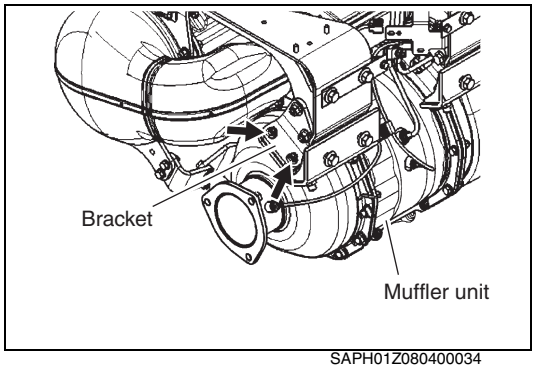

SAPH01Z080400034

(26) Remove the front side bracket and bolts (2 pcs.) and nuts (2 pcs.) of the muffler unit.

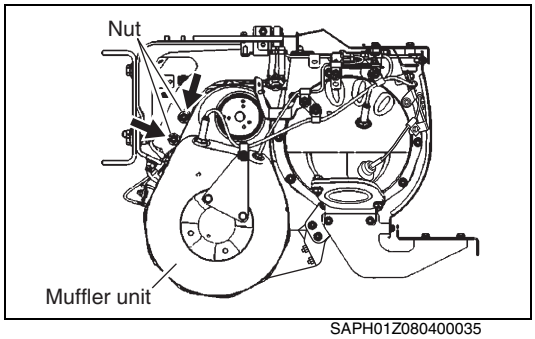

SAPH01Z080400035

(27) Remove the rear side bracket bolts (2 pcs.) and nuts (2 pcs.) of the muffler unit.

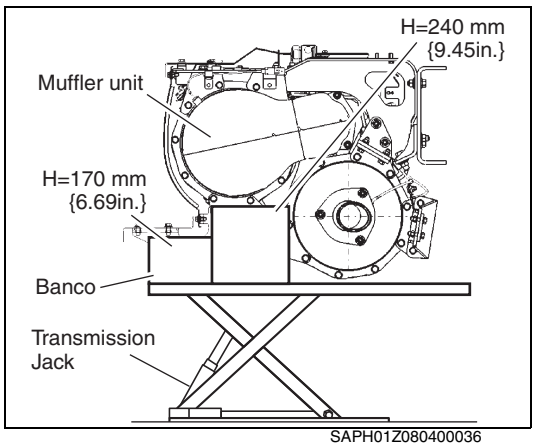

SAPH01Z080400036

(28) Support the muffler unit using the jack and Banco.

**NOTICE**
**Be extremely careful when handling the muffler unit because it is heavy.**

**HINT**
**The jack can be operated easily by placing a banco as shown in the figure.**

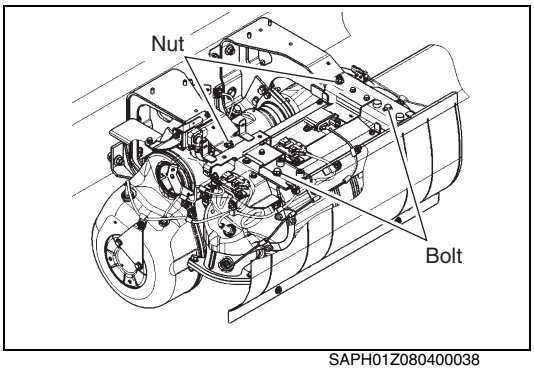

SAPH01Z080400038

(29) Remove the muffler unit by removing the bolts (2 pcs.) and nuts (2 pcs.).

**NOTICE**

**Do not apply heavy load or impact to the muffler unit when mounting and dismounting.**

## IMPORTANT POINT -MOUNTING

**1. MOUNTING**

(1) Support the muffler unit using the jack and Banco.

**NOTICE**

**Be extremely careful when handling the muffler unit because it is heavy.**

**HINT**

**The jack can be operated easily by placing a banco as shown in the figure.**

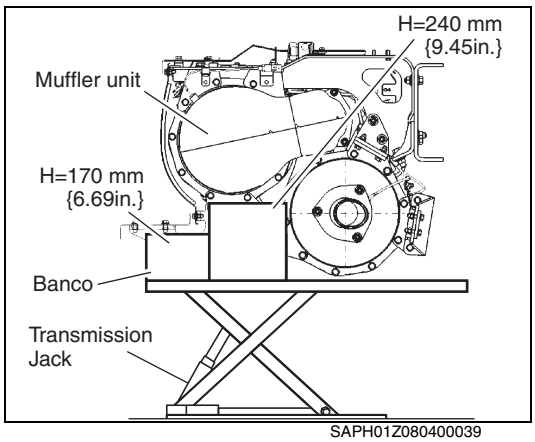


SAPH01Z080400039

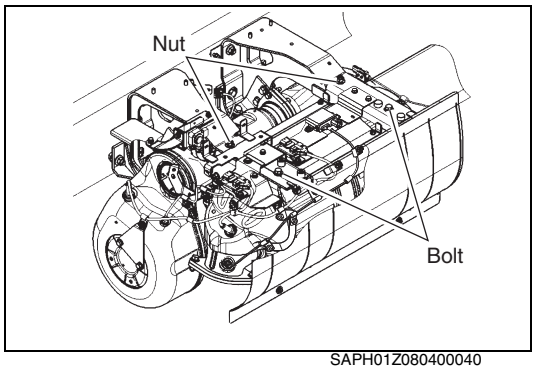


SAPH01Z080400040

(2) Mount the muffler unit with the bolts (2 pcs.) and nuts (2 pcs.).

**Tightening Torque:**
**69-103 N·m {704-1,050 kgf·cm, 51-76 lbf·ft}**

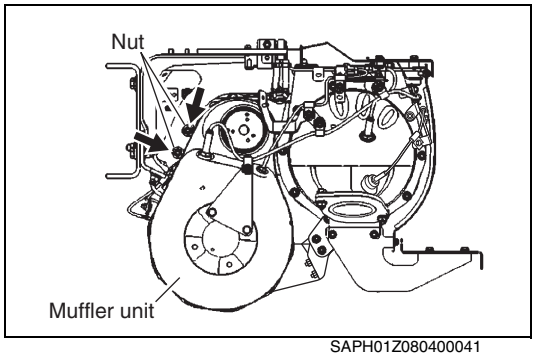


SAPH01Z080400041

(3) Install the rear side bracket bolts (2 pcs.) and nuts (2 pcs.) of the muffler unit.

**Tightening Torque:**
**69-103 N·m {704-1,050 kgf·cm, 51-76 lbf·ft}**

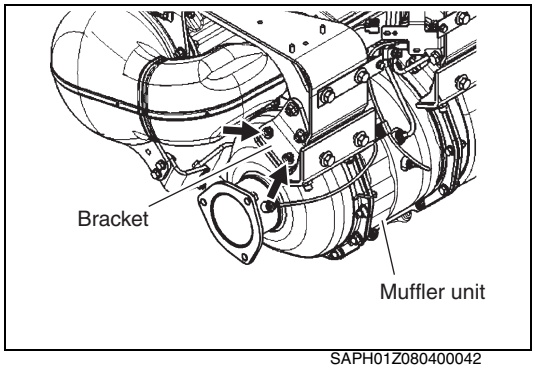


SAPH01Z080400042

(4) Install the front side bracket bolts (2 pcs.) and nuts (2 pcs.) of the muffler unit.

**Tightening Torque:**
**33-59 N·m {337-602 kgf·cm, 24-44 lbf·ft}**

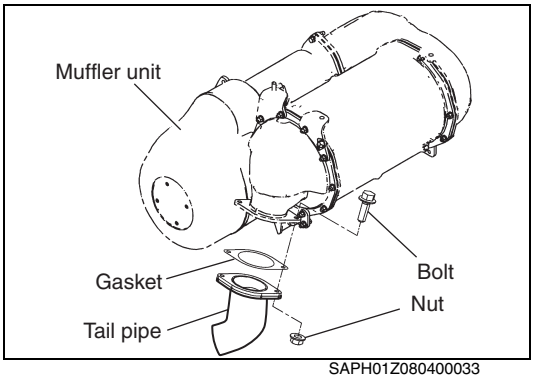

SAPH01Z080400033

(5) Replace with new gasket and attach the tail pipe to the muffler unit with the bolts (2 pcs.) and nuts (2 pcs.).

**Tightening Torque:**
**108-132 N·m {1,101-1,346 kgf·cm, 80-97 lbf·ft}**

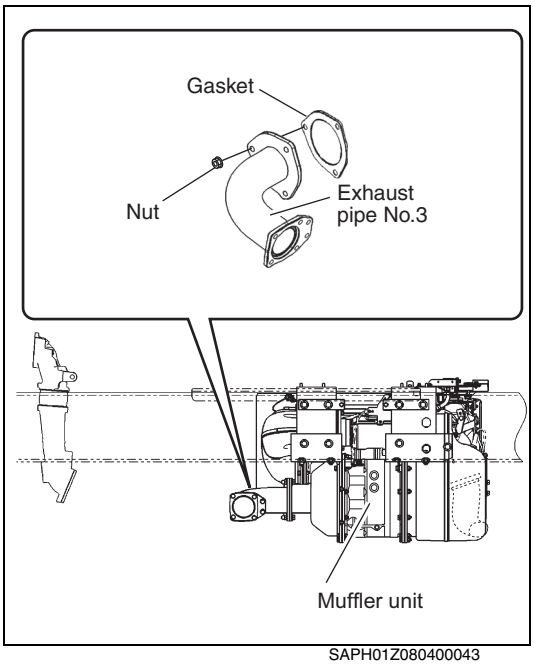

SAPH01Z080400043

(6) Replace with new gasket and attach exhaust pipe No. 3 to the muffler unit with the bolts (3 pcs.) and nuts (3 pcs.).

**Tightening Torque:**
**120 N·m {1,200 kgf·cm, 88 lbf·ft}**

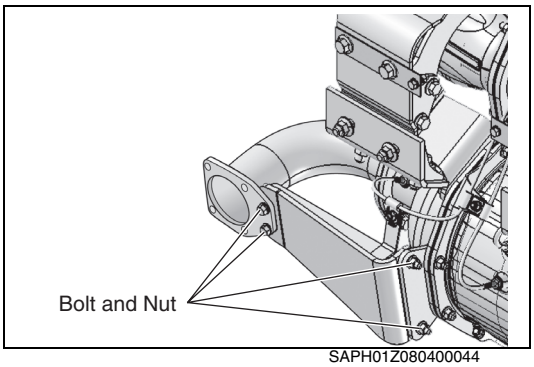

SAPH01Z080400044

(7) Attach the exhaust bracket to the muffler unit with the bolts (4 pcs.) and nuts (4 pcs.).

**Tightening Torque:**
**56-84 N·m {571-856 kgf·cm, 42-62 lbf·ft}**

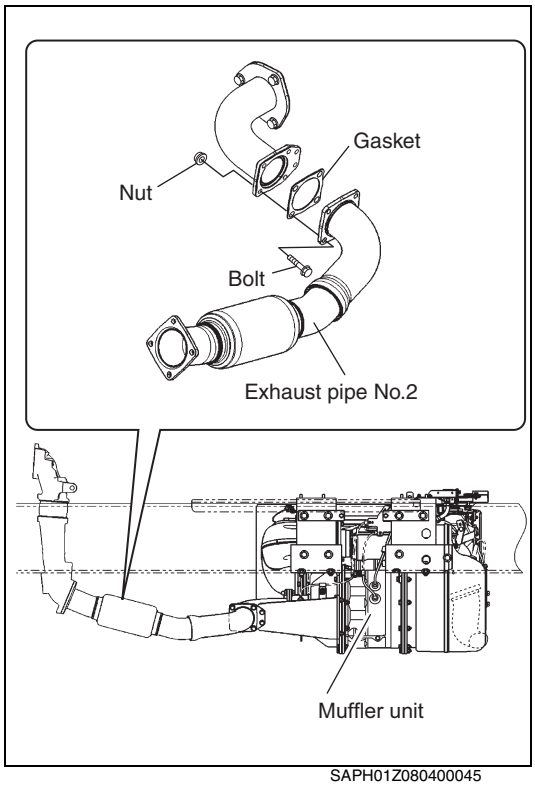


SAPH01Z080400045

(8) Replace with new gasket and install exhaust pipe No. 2 with the bolts (4 pcs.) and nuts (4 pcs.).

**Tightening Torque:**
**56-84 N·m {571-856 kgf·cm, 42-62 lbf·ft}**

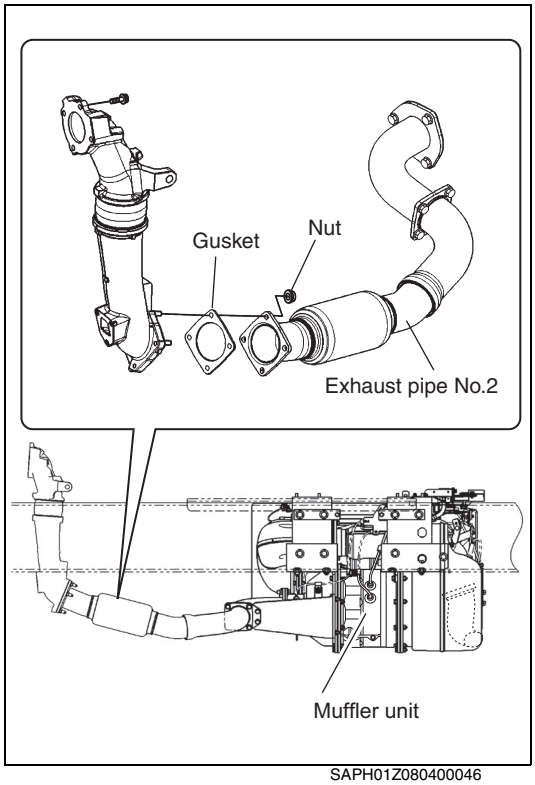


SAPH01Z080400046

(9) Replace with new gasket and install exhaust pipe No. 2 with the nuts (4 pcs.).

**Tightening Torque:**
**56-84 N·m {571-856 kgf·cm, 42-62 lbf·ft}**

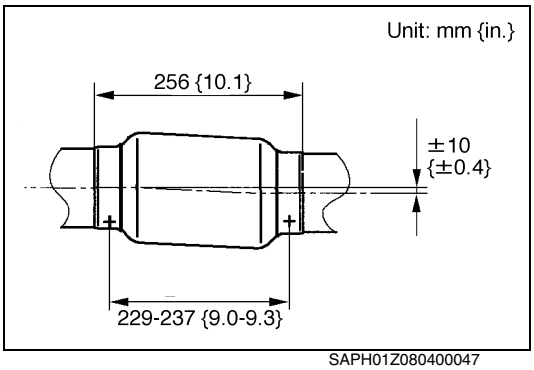

SAPH01Z080400047

**NOTICE**
**If the exhaust pipe is removed, make sure to mount the bellows tube of the exhaust pipe as in the figure to secure durability.**

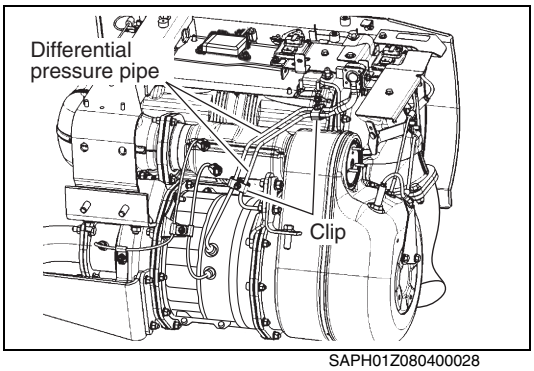

SAPH01Z080400028

(10) Install the differential pressure pipe with the clips (2 pcs.).

**NOTICE**
**When installing the differential pressure sensor pipe, wipe off the old anti-seizure lubricant on the flare nut and apply new anti-seizure lubricant.**

**Recommended anti-seizure lubricant: NEVER-SEEZ Pure Nickel Special (Bostic inc.)**

**Tightening Torque:**
**25-35 N·m {255-356 kgf·cm, 19-25 lbf·ft} (Flare nut)**

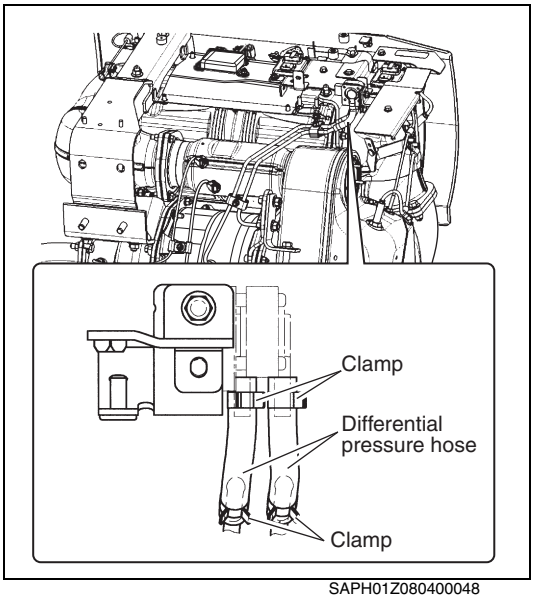

SAPH01Z080400048

(11) Install the differential pressure hoses (2 pcs.) with the clamps (4 pcs.).

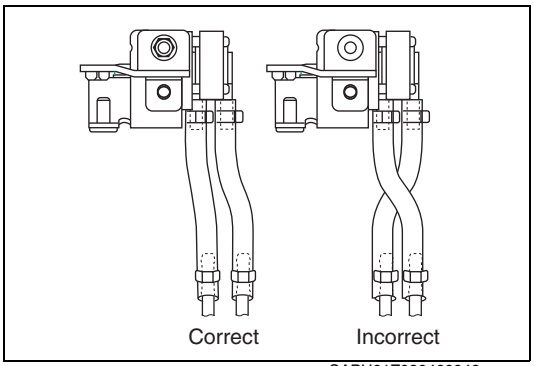

SAPH01Z080400049

**NOTICE**
**Assemble without crossing hoses.**

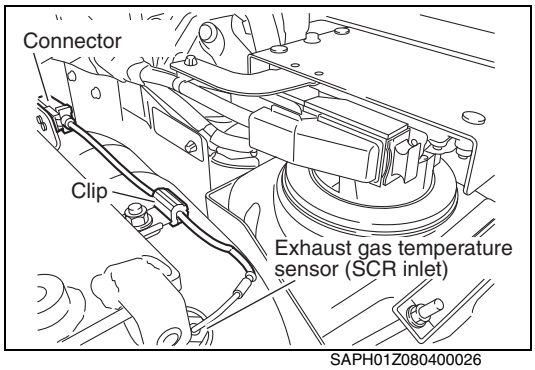

SAPH01Z080400026

(12) Install the exhaust gas temperature sensor (SCR inlet) .
**Tightening Torque:**
**25-40 N·m {255-407 kgf·cm, 19-29 lbf·ft}**

(13) Install the clip and connect the connector of exhaust gas temperature sensor (SCR inlet).

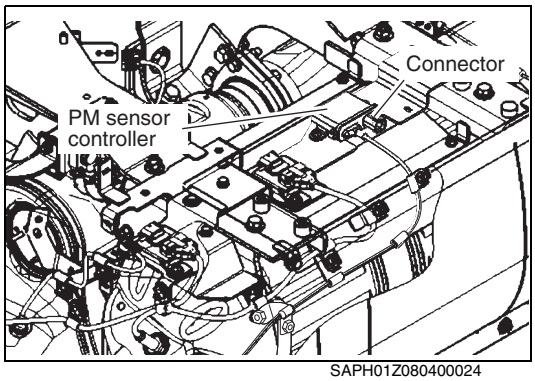

SAPH01Z080400024

(14) Install the PM sensor controller with the nuts (2 pcs.), and connect the connector.
**Tightening Torque:**
**3.9-7.1 N·m {40-72 kgf·cm, 2.9-5.2 lbf·ft}**

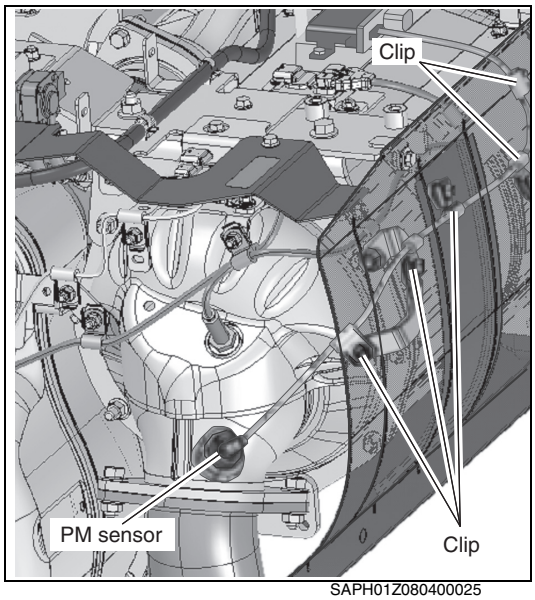

SAPH01Z080400025

(15) Install the clips (5 pcs.) and the PM sensor.

**Tightening Torque:**
**28-42 N·m {286-428 kgf·cm, 21-30 lbf·ft}**

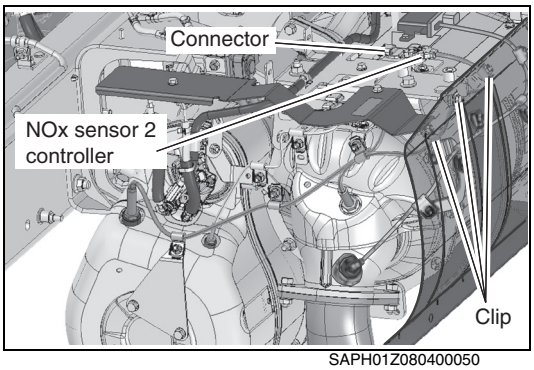

SAPH01Z080400050

(16) Install the nuts (2 pcs.) and the NOx sensor 2 controller and connect the connector.

**Tightening Torque:**
**3.9-7.1 N·m {40-72 kgf·cm, 2.9-5.2 lbf·ft}**

(17) Install NOx sensor 2 with the clips (3 pcs.).
**Tightening Torque:**
**40-60 N·m {408-612 kgf·cm, 29.5-44.2 lbf·ft}**

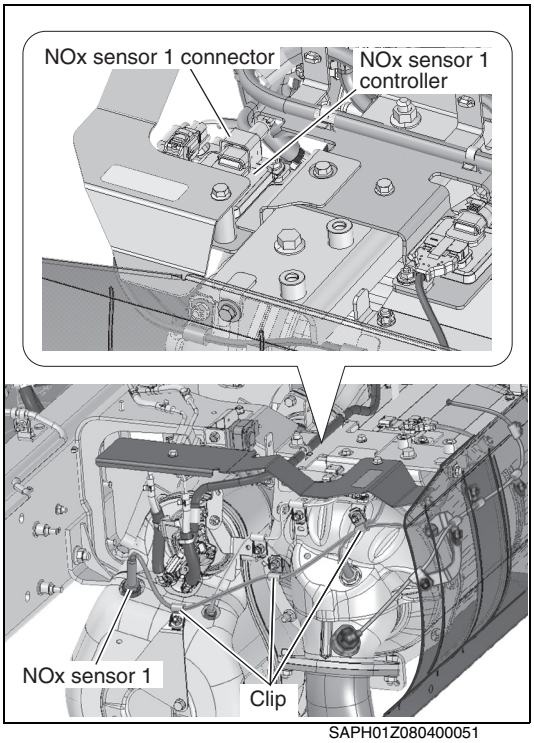

SAPH01Z080400051

(18) Install the NOx sensor 1 controller with the nuts (2 pcs.), and connect the connector.

**Tightening Torque:**
**3.9-7.1 N·m {40-72 kgf·cm, 2.9-5.2 lbf·ft}**

(19) Install NOx sensor 1 with the clips (3 pcs.).
**Tightening Torque:**
**40-60 N·m {408-612 kgf·cm, 29.5-44.2 lbf·ft}**

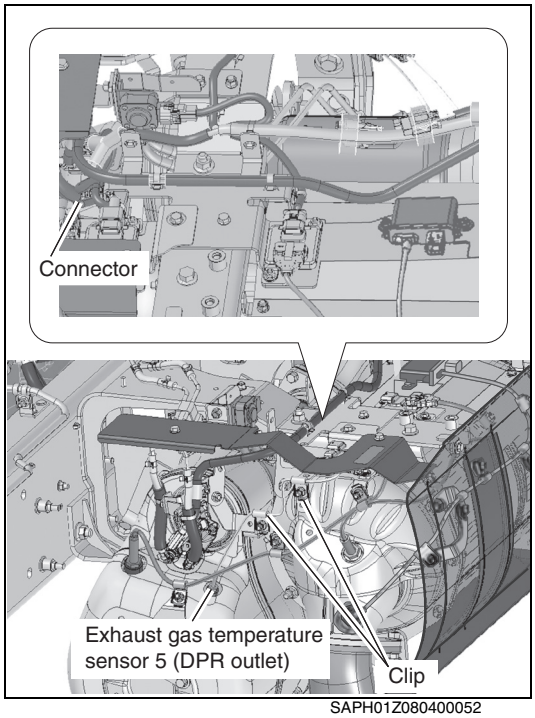

SAPH01Z080400052

(20) Install the exhaust gas temperature sensor 5 (DPR outlet).

**Tightening Torque:**
**25-35 N·m {255-357 kgf·cm, 18.4-25.8 lbf·ft}**

(21) Connect the connector of exhaust gas temperature sensor 5 (DPR outlet) and install the clip (2 pcs.).

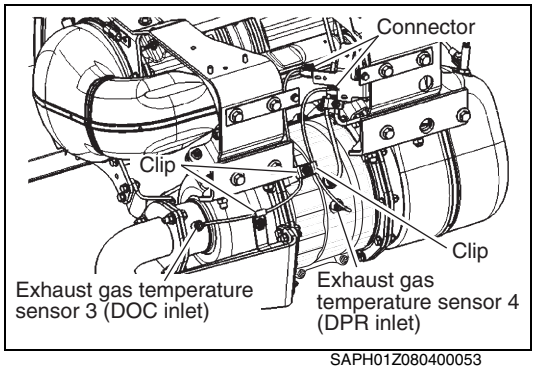

SAPH01Z080400053

(22) Connect the the connector of exhaust gas temperature sensor 3 (DOC inlet) and exhaust gas temperature sensor 4 (DPR inlet).

(23) Install the clips (3 pcs.) exhaust gas temperature sensor 3 (DOC inlet) and exhaust gas temperature sensor 4 (DPR inlet).
**Tightening Torque:**
**25-35 N·m {255-357 kgf·cm, 18.4-25.8 lbf·ft}**

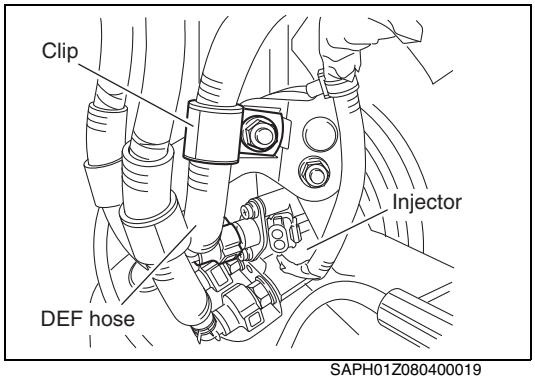

SAPH01Z080400019

(24) Connect the DEF hose to the injector with the clip.

**NOTICE**
**Before reassembling, wash away crystallized DEF on the connector with water.**

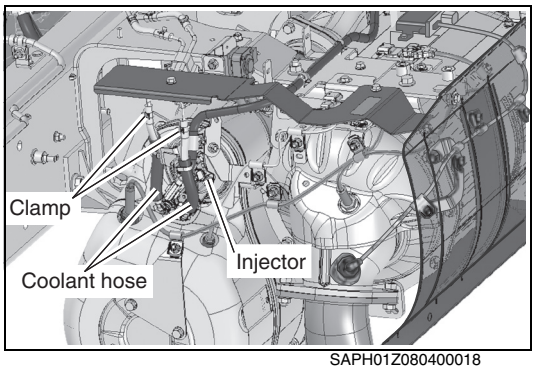

SAPH01Z080400018

(25) Connect the coolant hose to the injector with the clamps (2 pcs.).

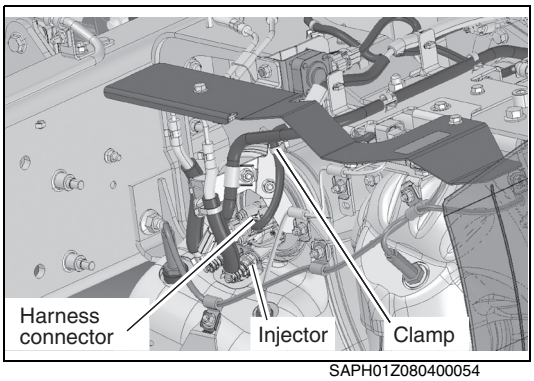

SAPH01Z080400054

(26) Connect the harness connector to the injector.

(27) Install the harness with the clamp.

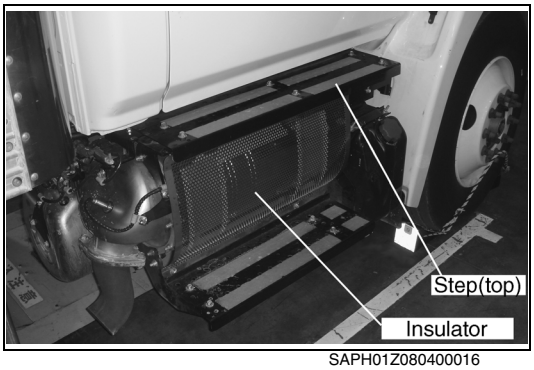

SAPH01Z080400016

(28) Mount the step (top) and the insulator on the right side of the vehicle.

**Tightening Torque:**
**18-26 N·m {184-265 kgf·cm, 14-19 lbf·ft}**

(29) Connect the battery ground terminal.

# DPR (DIESEL PARTICULATE ACTIVE REDUCTION SYSTEM)

## SYSTEM CONFIGURATION

EN01Z0804D100003

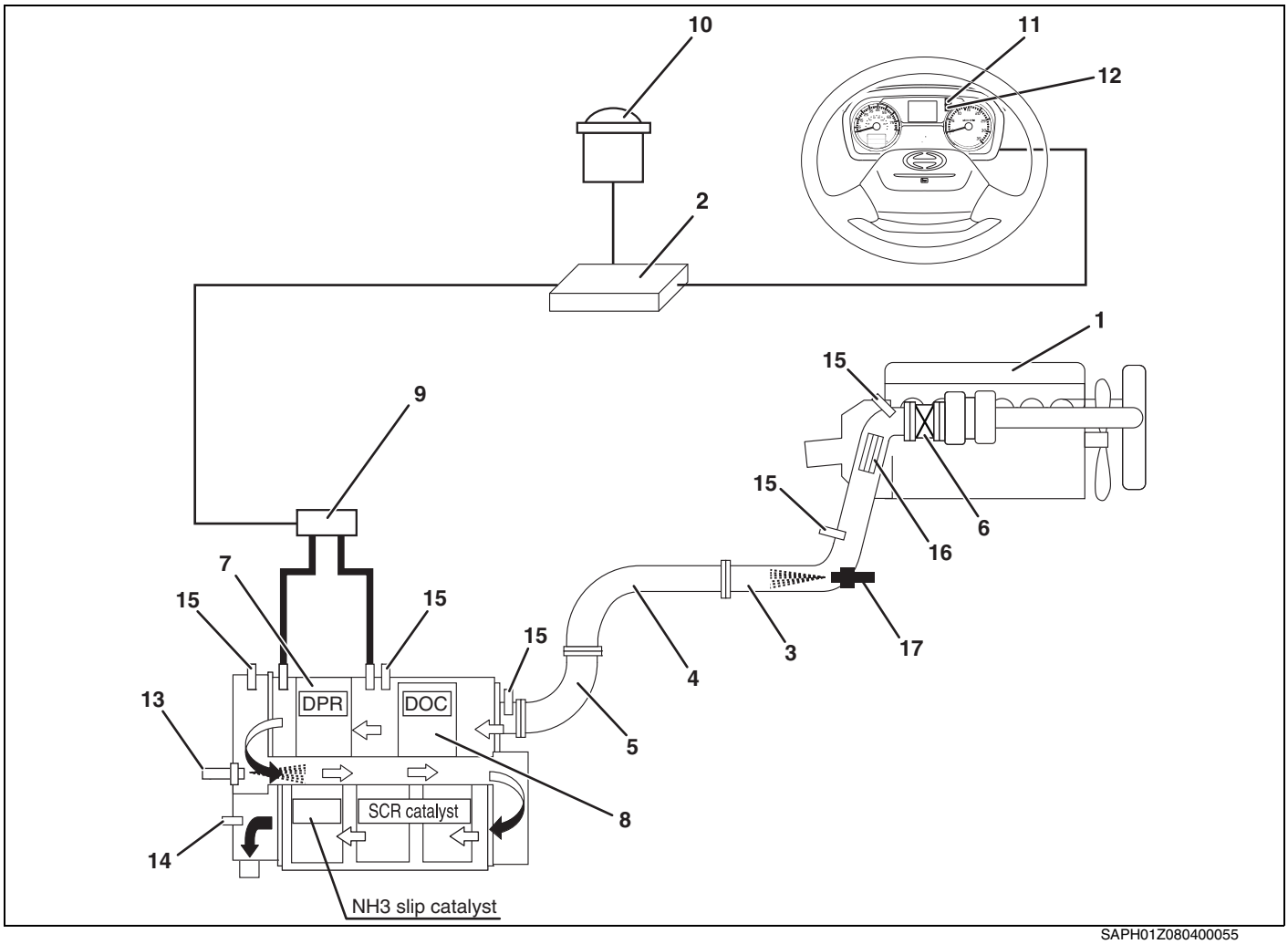


SAPH01Z080400055

| | | | |
|---|---|---|---|
| 1 | Engine | 10 | DPR-manual regeneration switch |
| 2 | Engine ECU | 11 | DPR indicator light |
| 3 | Exhaust pipe No.1 (ATC) | 12 | Check engine light |
| 4 | Exhaust pipe No.2 | 13 | DEF injector |
| 5 | Exhaust pipe No.3 | 14 | PM sensor |
| 6 | Exhaust control valve | 15 | Exhaust temperature sensor |
| 7 | Catalyst coated filter | 16 | ATC |
| 8 | Oxidation catalyst | 17 | Aftertreatment fuel injector |
| 9 | Differential pressure sensor | | |

# STRUCTURE OF DPR-CLEANER

EN01Z0804D100004

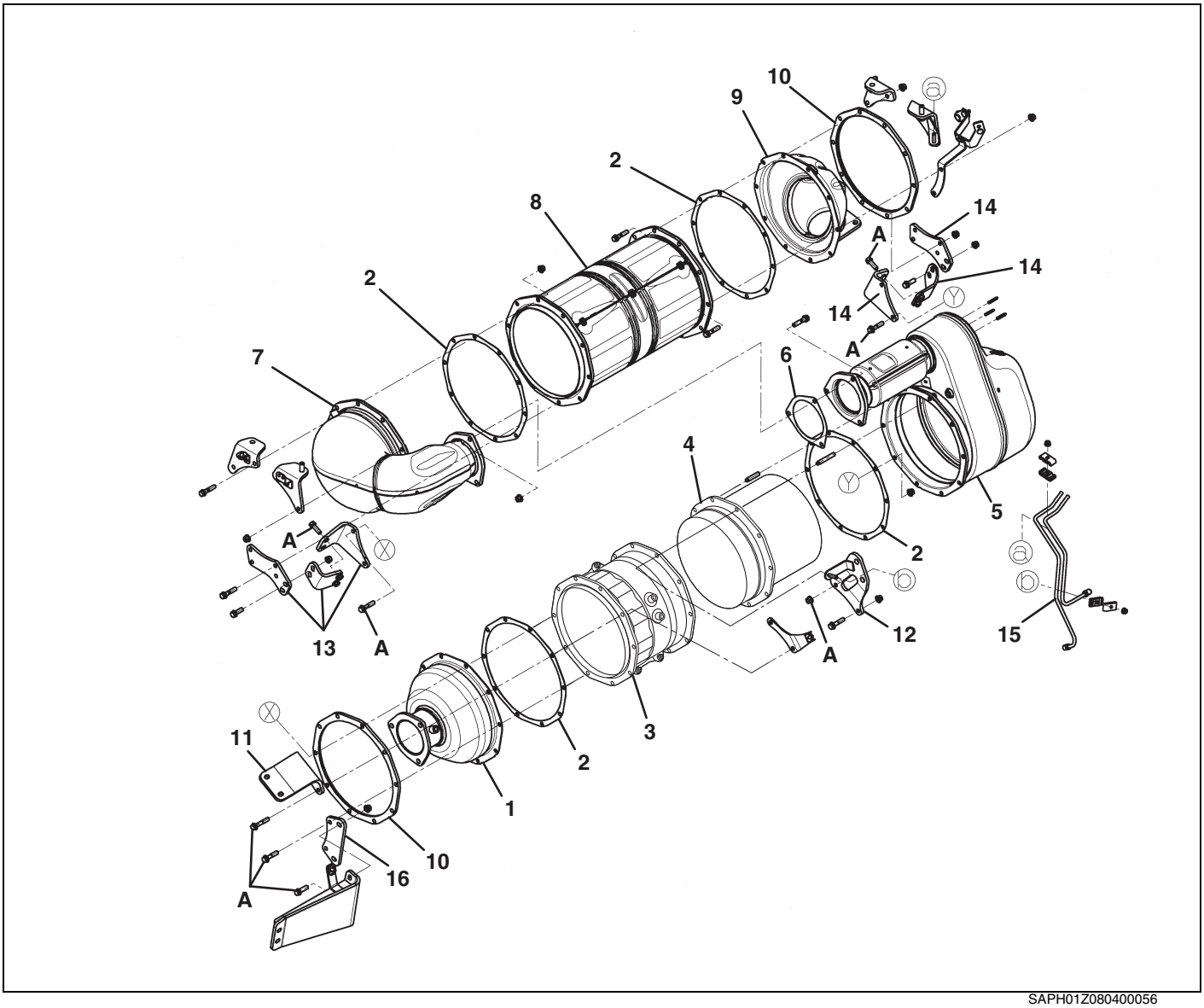


SAPH01Z080400056

| | | | |
|---|---|---|---|
| 1 | Inlet chamber sub assembly | 9 | Outlet chamber sub assembly |
| 2 | Gasket * | 10 | Flange |
| 3 | Particulate filter assembly (DOC) | 11 | Bracket |
| 4 | Particulate filter sub assembly (DPR filter) | 12 | Bracket |
| 5 | Chamber sub assembly (Rear) | 13 | Bracket (Front) |
| 6 | Gasket * | 14 | Bracket (Rear) |
| 7 | Chamber sub assembly (Front) | 15 | Differential pressure pipe |
| 8 | Monolithic converter assembly | 16 | Exhaust pipe bracket support |

*: Nonreusable. Be sure to use new parts.

Tightening torque — Unit: N·m {kgf·cm, lbf·ft}

| | | | |
|---|---|---|---|
| A | 64 {653, 47} | | |

# DPR INSPECTION

EN01Z0804H200003

**1. ROUTINE INSPECTION ITEMS**

(1) Check the exhaust system tightening portions (exhaust pipe, main unit flange) for looseness or exhaust leakage.

(2) Check external appearance of the harness of the exhaust temperature sensor for trouble (cracks in coating or missing clip).

(3) Inspect the hose of the differential pressure sensor and check the hose for deterioration or cracks. Replace a hose which has been used for three years or more with a new one.

(4) Check for a blown indicator light or wire break in the DPR-cleaner switch and meter. (Stop the engine, turn ON the starter switch, and press the DPR-cleaner switch. If both the light in the switch and indicator light in the meter illuminate, the lights are normal.)

# INSPECTION PROCEDURE FOLLOWED WHEN "DPR MAINTENANCE" IS DISPLAYED ON THE INFORMATION DISPLAY

EN01Z0804H300001

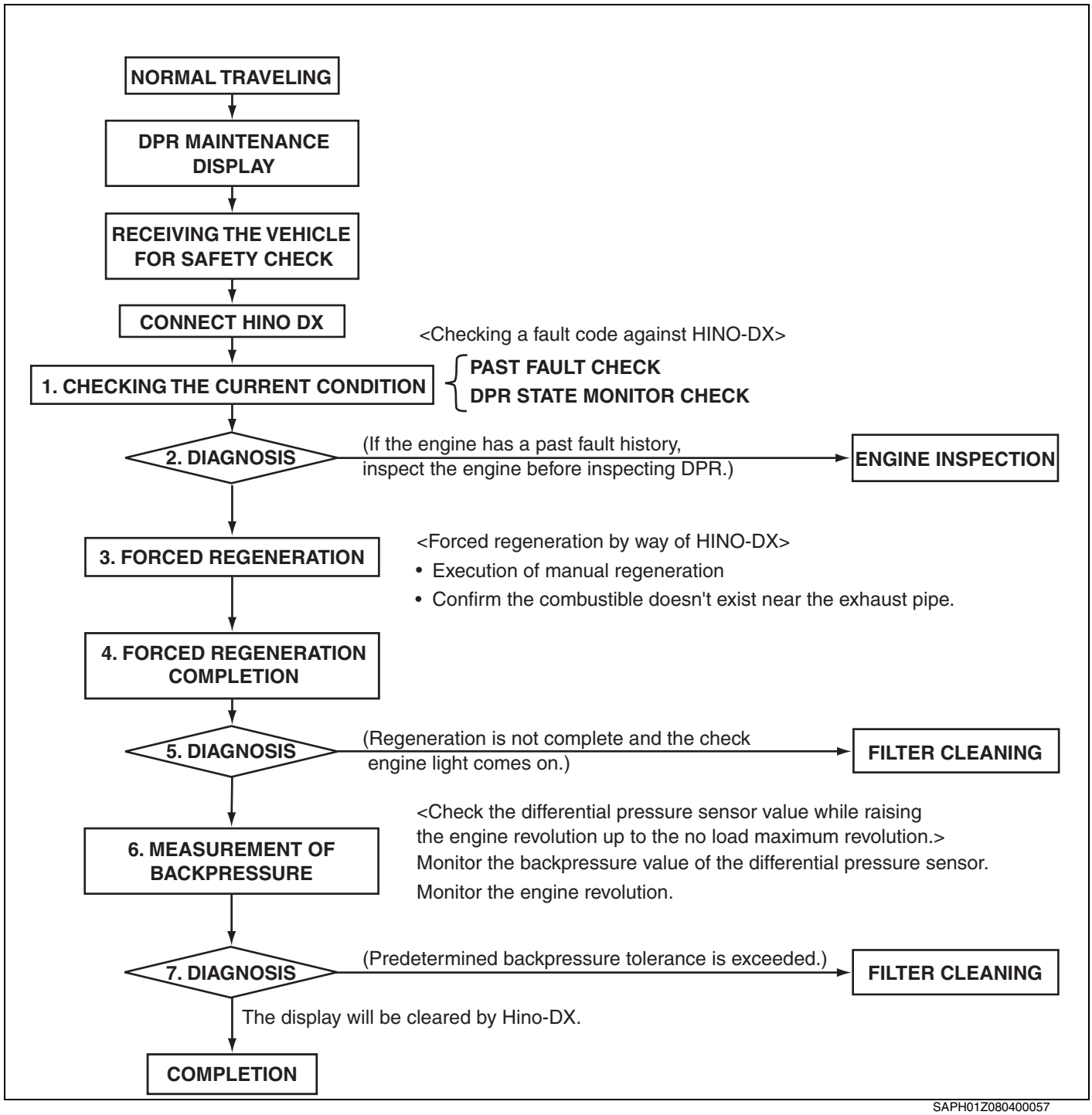


SAPH01Z080400057

# INSPECTION BY WAY OF HINO DX II

EN01Z0804H200004

**1. DPR status check**

(1) Select the "DPR check" in the "Inspection Menu" of HINO DX II .

(2) Confirm Data View of the "DPR check" display (monitor), if the value for all the items are "OFF", DPR functions normally.
Then "Manual forced regeneration" and "DPR differential pressure check" can be done.

(3) In case "ON" is displayed in Data view of the "DPR check" display (monitor), check according to the procedure on page EN04-40, "DETERMINATION BY WAY OF DPR STATE DETERMINATION MONITOR OF HINO DX II ".

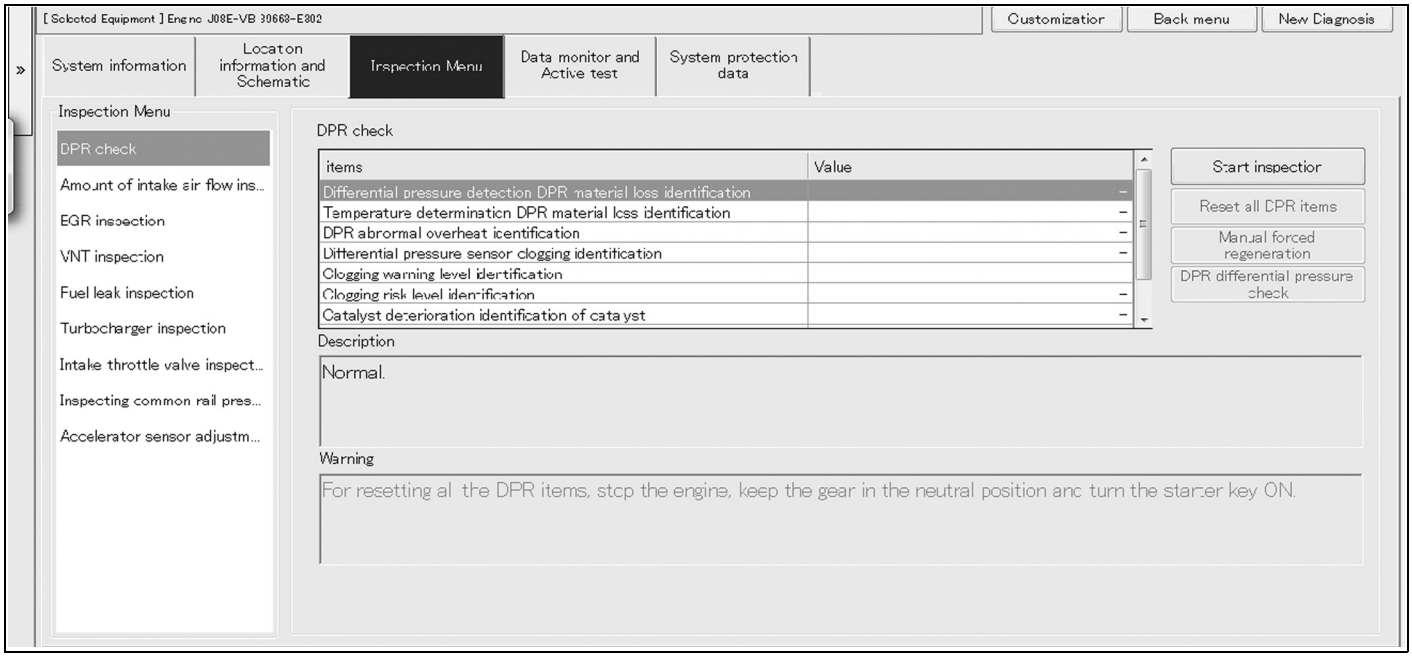


SAPH01Z080400058

**2. Forced regeneration**

(1) Forced regeneration is done by the "Manual forced regeneration" screen.

**⚠ CAUTION**

- **Confirm safety of the surrounding area, then press DPR regeneration switch inside the cabin to execute the regeneration.**
- **Confirm the PTO switch is OFF.**

(2) When the "Regeneration switch ON identification" value is ON, inspection of wash or replace the filter.
When the value is OFF, DPR functions normally.

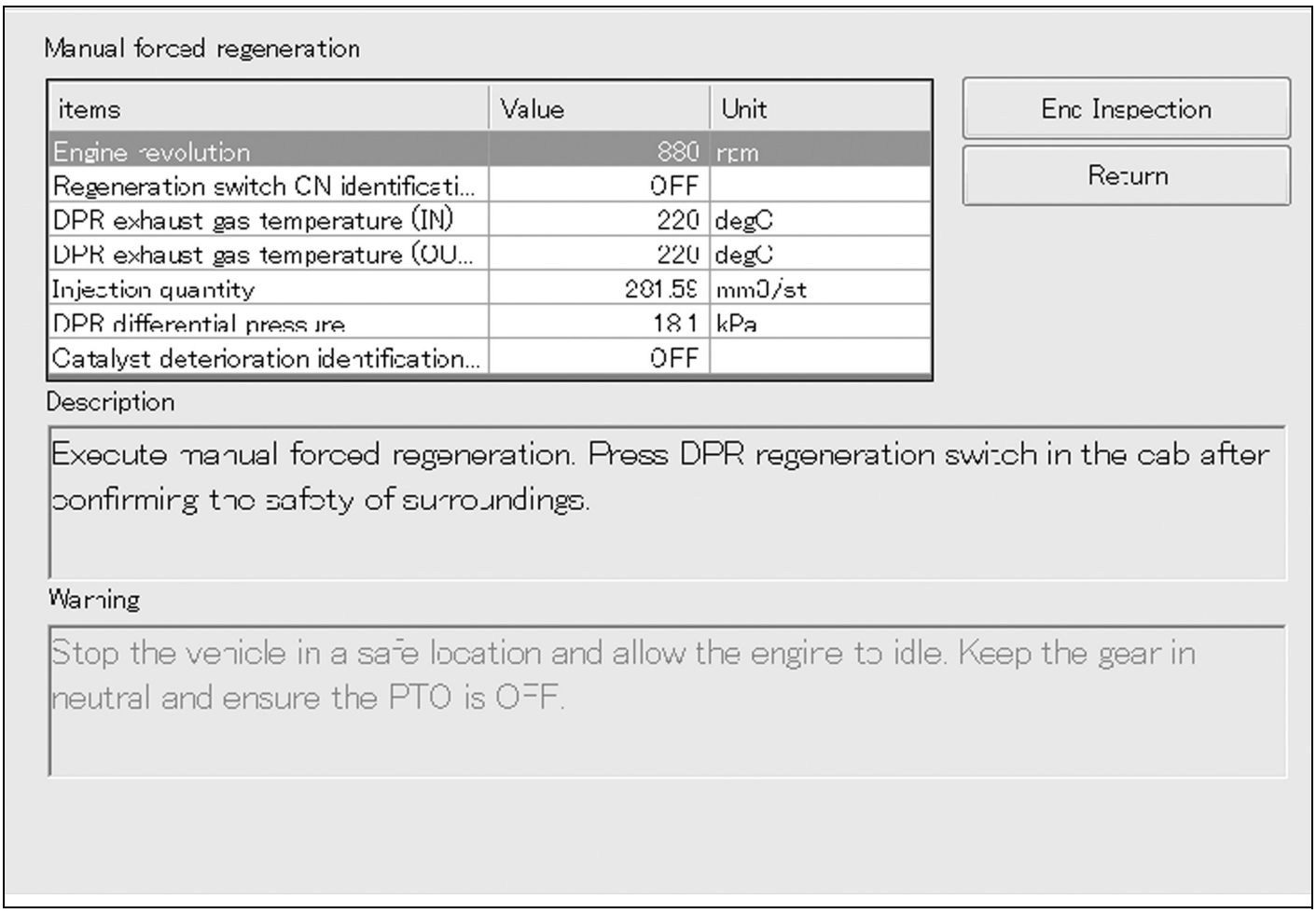


SAPH01Z080400059

**3. DPR differential pressure check**

(1) Check the DPR differential pressure through the "DPR check" display.
(2) Confirm the exhaust gas temperature (in and out) is less than 200°C {392°F}.
(3) Engine speed will rise automatically, then record the indicated maximum DPR differential pressure.
(4) In case the central value of the recorded DPR differential pressure value exceeds the specific value, clean or replace the filter.
Then "Stop" the DPR differential pressure check.

**Specific value**

| Engine speed (no load maximum revolution) | Differential pressure inspection standard value (kPa {kgf/cm$^2$, lbf/in.$^2$}) |
|---|---|
| 2,800 r/min. | 5.0 {0.05, 0.7} |

(5) When the differential pressure is unchanged check the following.
If the following are normal, the differential pressure sensor should be replaced.
a. Check differential pressure hose for cracks or hole openings.
b. Check that the hose clamp is neither loose nor disconnected.
c. Check whether there is clogging in the differential pressure pipe (DPR cleaner side).
Use the compressed air from one end of the pipe to check for clogging. If the air passes to the other side easily, it is clear.

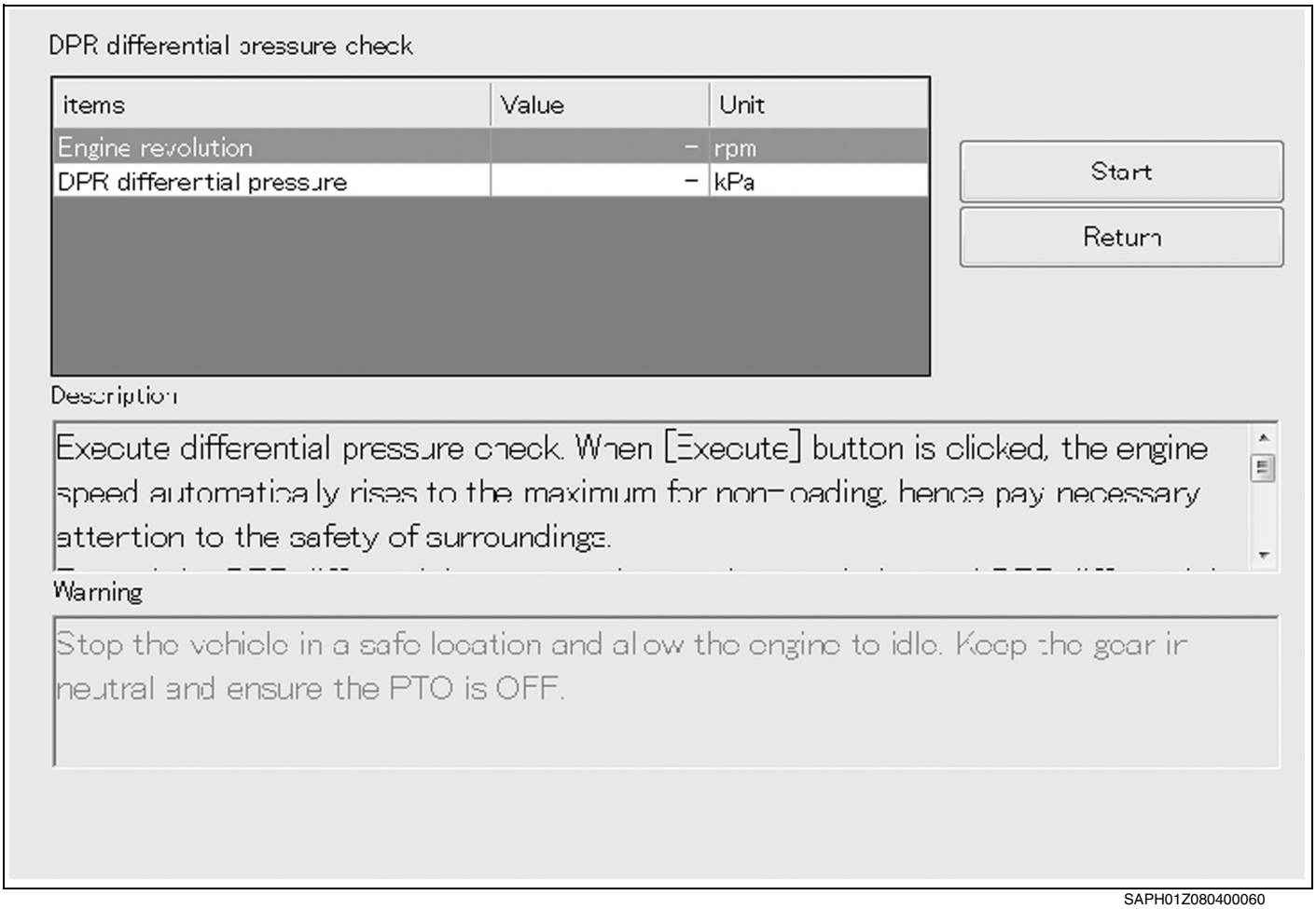


SAPH01Z080400060

# INSPECTION PROCEDURE FOLLOWED WHEN CHECK ENGINE LIGHT ILLUMINATES (ABNORMAL)

EN01Z0804H300002

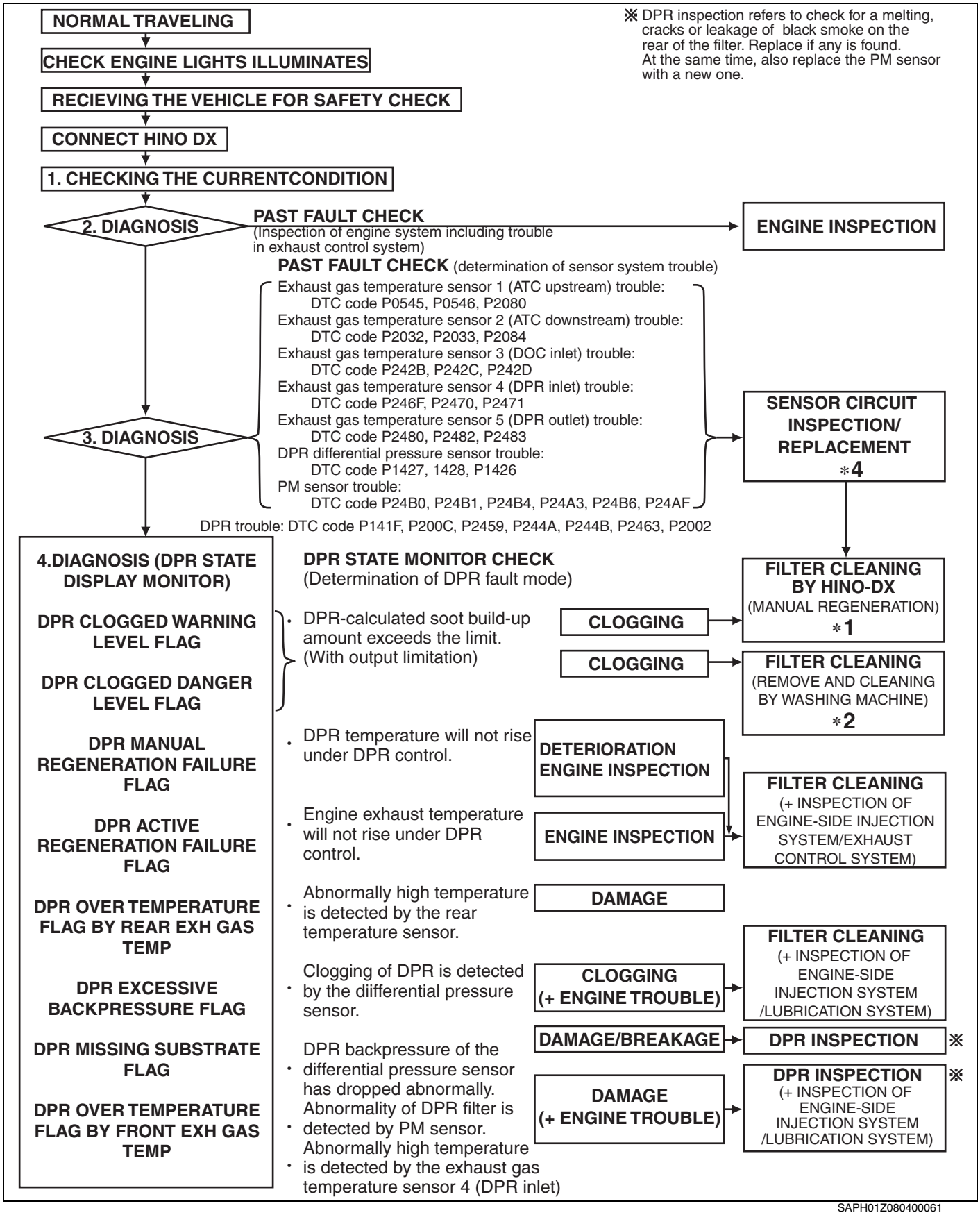


SAPH01Z080400061

## *1 Additional information for inspections with HINO DX II

Light cases of DPR clogging can be treated without removing the housing.
The procedure is shown below.

The "DPR STATUS" can be checked with the HINO DX II , and when only the "Clogging warning level indication" is "ON", regeneration processing can be performed with the DPR SW or the tool.

**Confirmation method:**
Use the HINO DX II , select [Engine], then open screens in the order of Inspection Menu→ DPR check → Start inspection, and confirm that "value" is "ON" for the item "Clogging warning level indication" of the DPR check. Only when this is "ON" can manual regeneration by pressing the DPR manual regeneration switch or manual regeneration by HINO DX II setting be performed.

1. Press the DPR Manual regeneration switch. When manual regeneration has started, wait until regeneration has been completed and confirm that the engine check light has gone out.
2. If the operation by means of the DPR SW is not accepted, connect the HINO DX II to the vehicle, erase the trouble code, and then perform manual regeneration according to the following procedure. When manual regeneration has started, wait until regeneration has been completed and confirm that the engine check light has gone out.

   **Confirmation method:**
   Use the HINO DX II , select [Engine], and then continue in the order of Inspection Menu → DPR check → Start inspection → Manual forced regeneration.
3. After completion of manual regeneration by (1) or (2), keep the engine running and wait for the exhaust temperature (IN side) to drop. Confirm a drop to 200 degrees or lower and then inspect the exhaust gas backpressure according to the following procedure.

   **Confirmation method:**
   Execute in the order of Start inspection→ DPR differential pressure check→ Start.
4. Confirm that the values of the exhaust gas backpressure are at or below the standard.

**Standard:**

| Engine model | DPR Backpressure (Units: kPa {kgf/cm$^2$, lbf/in.$^2$}) |
|---|---|
| J08E | 5.0 {0.05, 0.7} |

5. When the confirmation result in (4) is at or below the standard, DPR manual regeneration and the confirmation work have been completed. Click "Stop" on the DPR differential pressure Check screen to end the work with the HINO DX II .
6. If the exhaust gas backpressure with the inspection in (5) exceeds the standard, repeat the steps (2), (3), (4), and (5).
7. If the exhaust gas backpressure with the work in (6) is within the standard, DPR manual regeneration and the confirmation work have been completed. Click "Stop" on the DPR differential pressure check screen to end the work with the HINO DX II .
8. If the exhaust gas backpressure still exceeds the standard with the second manual regeneration, the DPR filter is defective and must be replaced. At the same time, also replace the PM sensor with a new one.

## *2 Additional information for filter cleaning with a washing machine

Confirm the following for filter cleaning with a washing machine.
Use a washing machine from a manufacturer recommended by Hino Motors.
Perform cleaning with correct installation of the attachment for DPR filters made by Hino Motors.
In the following instances the filter cannot be cleaned. In these cases, the filter must be replaced.

1. Cleaning is not possible for filters where soot has escaped and the surroundings have turned black when the filter body is seen from the gas flow outlet side.
2. Cleaning is not possible when a large quantity of oil adheres to the filter body as seen from the gas flow inlet side.
3. Cleaning is not possible when the filter or the catalyst shows cracks or damage seen from any side.
   When cleaning has been completed and the filter has been installed again, perform the following inspections.
4. Use the HINO DX II to perform DPR forced regeneration, then confirm normal completion.
5. In this condition, wait for the exhaust gas temperature to drop to 200°C or lower, perform the backpressure inspection, and confirm that the inspection value is at or below the standard.
6. If the backpressure value is high, the filter is defective and must be replaced.

## *3 Check for sensor coupler disconnection even when DPR and DTC code is displayed.

## *4 Pay attention to the following when the temperature sensor is inspected because of DPR and DTC code or a temperature sensor DTC code.

1. Replace if the tip is bent.
2. Do not bend the tip when it is normal.
3. When the sensor tip is bent, normal control may not be possible and this can lead to DPR trouble.
4. When disconnecting the sensor, remove the sensor body from the muffler after completely removing the harness fixing clips. If this is not done, the sensor tip could get damaged.

# DETERMINATION BY WAY OF DPR STATE DETERMINATION MONITOR OF HINO DX II

EN01Z0804H200005

**1. CHECK THAT THE CHECK ENGINE LIGHT COMES ON.**

**2. CONNECT HINO DX II .**

**3. CHECK PAST FAULTS.**

(1) Check past faults by way of HINO DX II . In case a general engine fault such as a trouble of an exhaust control system is displayed, inspect and repair the pertinent section.

(2) Inspect and repair general engine faults and check past faults again. In case a code indicating a sensor system trouble is displayed, inspect and replace the sensor circuit.

| | DTC code |
|---|---|
| Exhaust gas temperature sensor 1 (ATC upstream) trouble | P0545, P0546, P2080 |
| Exhaust gas temperature sensor 2 (ATC downstream) trouble | P2032, P2033, P2084 |
| Exhaust gas temperature sensor 3 (DOC inlet) trouble | P242B, P242C, P242D |
| Exhaust gas temperature sensor 4 (DPR inlet) trouble | P246F, P2470, P2471 |
| Exhaust gas temperature sensor 5 (DPR outlet) trouble | P2480. P2482, P2483 |
| DPR differential pressuer sensor trouble | P1426, P1427, P1428 |
| PM sensor trouble | P24B0, P24B1, P24B4, P24A3, P24B6, P24AF |

(3) Check past faults. In case DPR trouble (DTC code: P141F, P200C, P2459, P244A, P2002, P244B, P2463) is displayed, check the DPR state monitor.

# CHECKING THE DPR STATE

EN01Z0804H200006

**1. CHECK THE DPR STATE MONITOR.**

(1) Refer to "INSPECTION BY WAY OF HINO DX II " and check the DPR state monitor. Perform inspection as per the procedure under "INSPECTION BY WAY OF HINO DX II ".

# REPLACEMENT OF DPR FILTER

EN01Z0804H200007

**⚠ WARNING**

**Do not touch the muffler unit when it could be hot. You can be severely burned.**

**NOTICE**

**Replace the DPR filter with a new one and install it on the vehicle. At the same time, also replace the PM sensor with a new one.**

**1. REMOVE THE DPR FILTER.**

(1) Dismount the muffler unit of the vehicle.
**Reference: EXHAUST SYSTEM (J08E), EXHAUST PIPE AND MUFFLER UNIT, OVERHAUL, IMPORTANT POINT -DISMOUNTING (Page EN04-13)**

(2) Remove the bolts (4 pcs.) and nuts (2 pcs.) of the bracket (front) (A) in-between the chamber sub assembly (front) (B) and inlet chamber sub assembly (C).

(3) Remove the bolts (2 pcs.) and nuts (2 pcs.) of the bracket in-between the support sub assembly (front) (D) and inlet chamber sub assembly (C).

(4) Remove the bolts (8 pcs.) and nuts (8 pcs.) of the flange (E) and exhaust pipe bracket support (F) and gasket (G) and inlet chamber sub assembly (C).

(5) Remove the bolts (4 pcs.) and nuts (4 pcs.) of the rear flange bracket (H) of the monolithic converter assembly (I) and particulate filter assembly (DOC) (J).

(6) Remove the bolts (2 pcs.) and nuts (2 pcs.) of the rear flange bracket (K) of the particulate filter assembly (DOC) (J) .

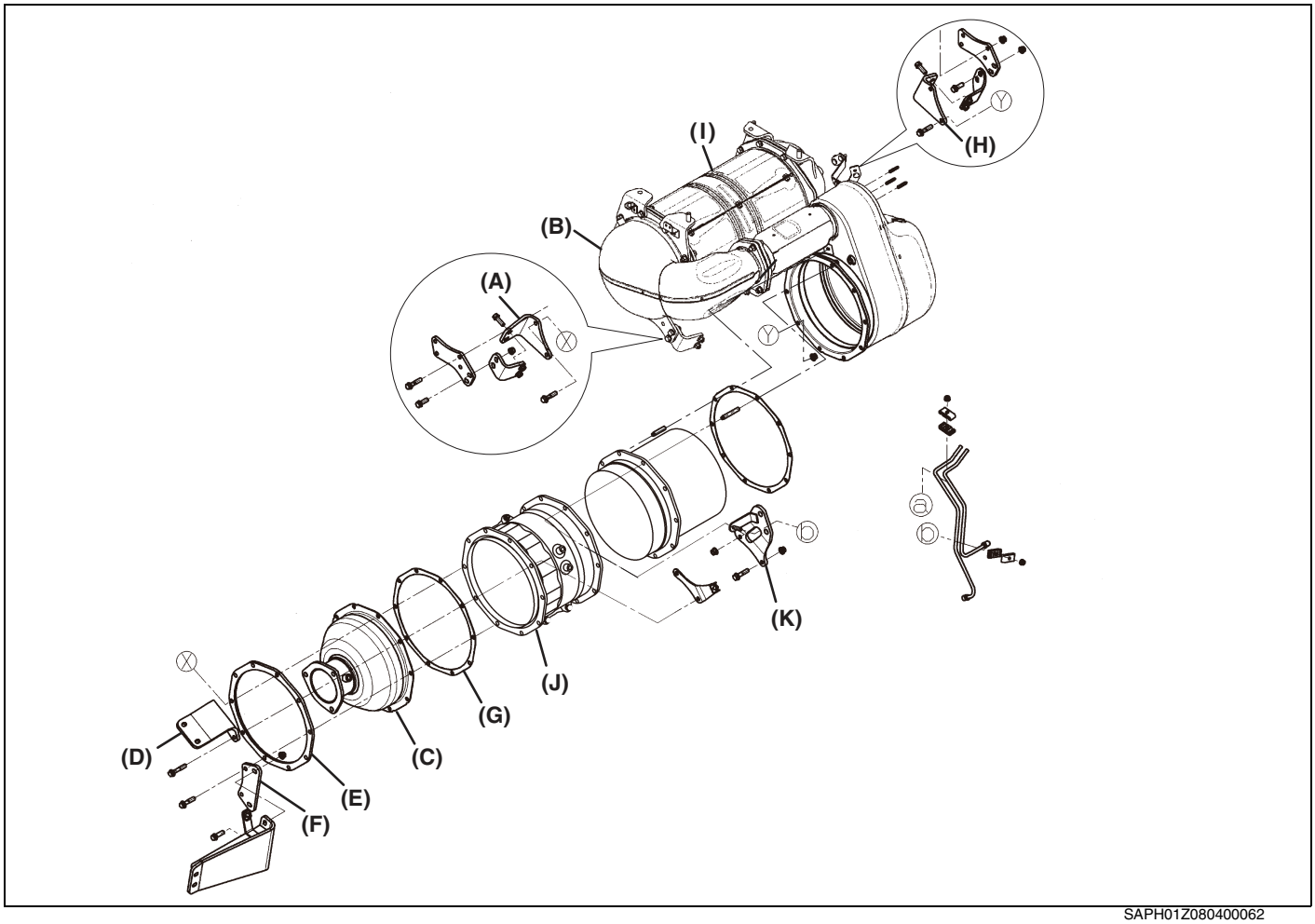


SAPH01Z080400062

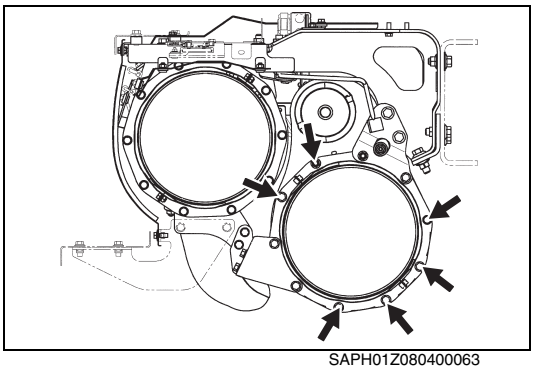
SAPH01Z080400063

(7) Remove the front flange fasteners (6 pcs.) of the particulate filter sub assembly (DPR filter).

**NOTICE**
**The frame side bracket cannot be removed, because the differential pressure pipe extends through the bracket.**

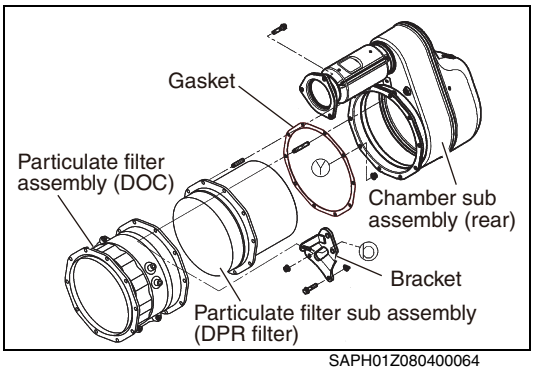

SAPH01Z080400064

(8) Pull the particulate filter assembly (DOC) from the stud bolts of the chamber sub assembly (rear).

**NOTICE**

- **During work, use the jack for safety's sake.**
- **When working, be careful that the particulate filter sub assembly (DPR filter) does not come off.**

(9) Pull the particulate filter sub assembly (DPR filter) and gasket from the stud bolts of the chamber sub assembly (rear).

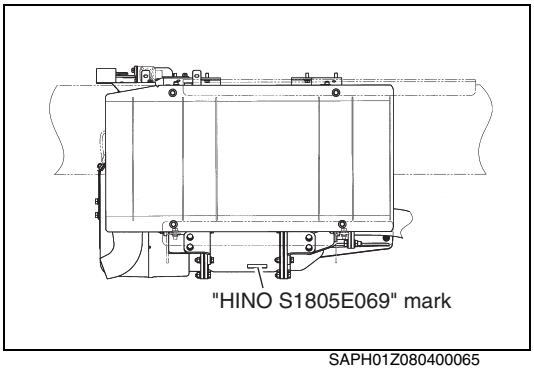

SAPH01Z080400065

**2. INSTALL THE DPR FILTER.**

**NOTICE**

- **Before installing check if the particulate filter sub assembly (DPR filter) has the "HINO S1805E069" mark on it.**
- **Replace the gasket with a new gasket.**
- **Tighten the fastening bolts in diagonal order.**

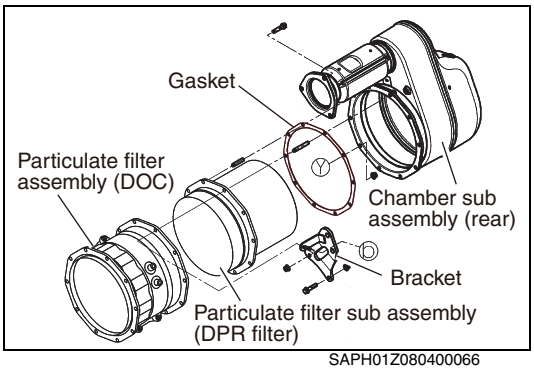

SAPH01Z080400066

(1) Insert the particulate filter sub assembly (DPR filter) and new gasket over the stud bolts of the chamber sub assembly (rear).

**NOTICE**
**During work, use the jack for safety's sake.**

(2) Insert the particulate filter sub assembly (DOC) over the stud bolts of the chamber sub assembly (rear).

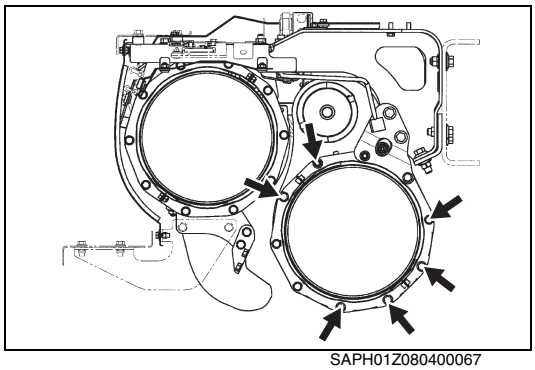

SAPH01Z080400067

(3) Install the front flange fasteners (6 pcs.) of the particulate filter sub assembly (DPR filter).

**Tightening Torque:**
**64 N·m {653 kgf·cm, 47 lbf·ft}**

(4) Install the rear flange bracket (K) of the particulate filter assembly (DOC) (J) with the bolts (2 pcs.) and nuts (2 pcs.).
**Tightening Torque:**
**64 N·m {653 kgf·cm, 47 lbf·ft}**

(5) Install the rear flange bracket (H) of the monolithic converter assembly (I) and particulate filter assembly (DOC) (J) with the bolts (4 pcs.) and nuts (4 pcs.).
**Tightening Torque:**
**64 N·m {653 kgf·cm, 47 lbf·ft}**

(6) Install the flange (E) and inlet chamber sub assembly (C) and exhaust pipe bracket support (F) and gasket (M) with the bolts (8 pcs.) and nuts (8 pcs.).
**Tightening Torque:**
**64 N·m {653 kgf·cm, 47 lbf·ft}**

(7) Install the bracket in-between the support sub assembly (front) (D) and inlet chamber sub assembly (C) with the bolts (2 pcs.) and nuts (2 pcs.).
**Tightening Torque:**
**64 N·m {653 kgf·cm, 47 lbf·ft}**

(8) Install the bracket (front) (A) in-between the chamber sub assembly (front) (B) and inlet chamber sub assembly (C) with the bolts (4 pcs.) and nuts (2 pcs.).
**Tightening Torque:**
**64 N·m {653 kgf·cm, 47 lbf·ft}**

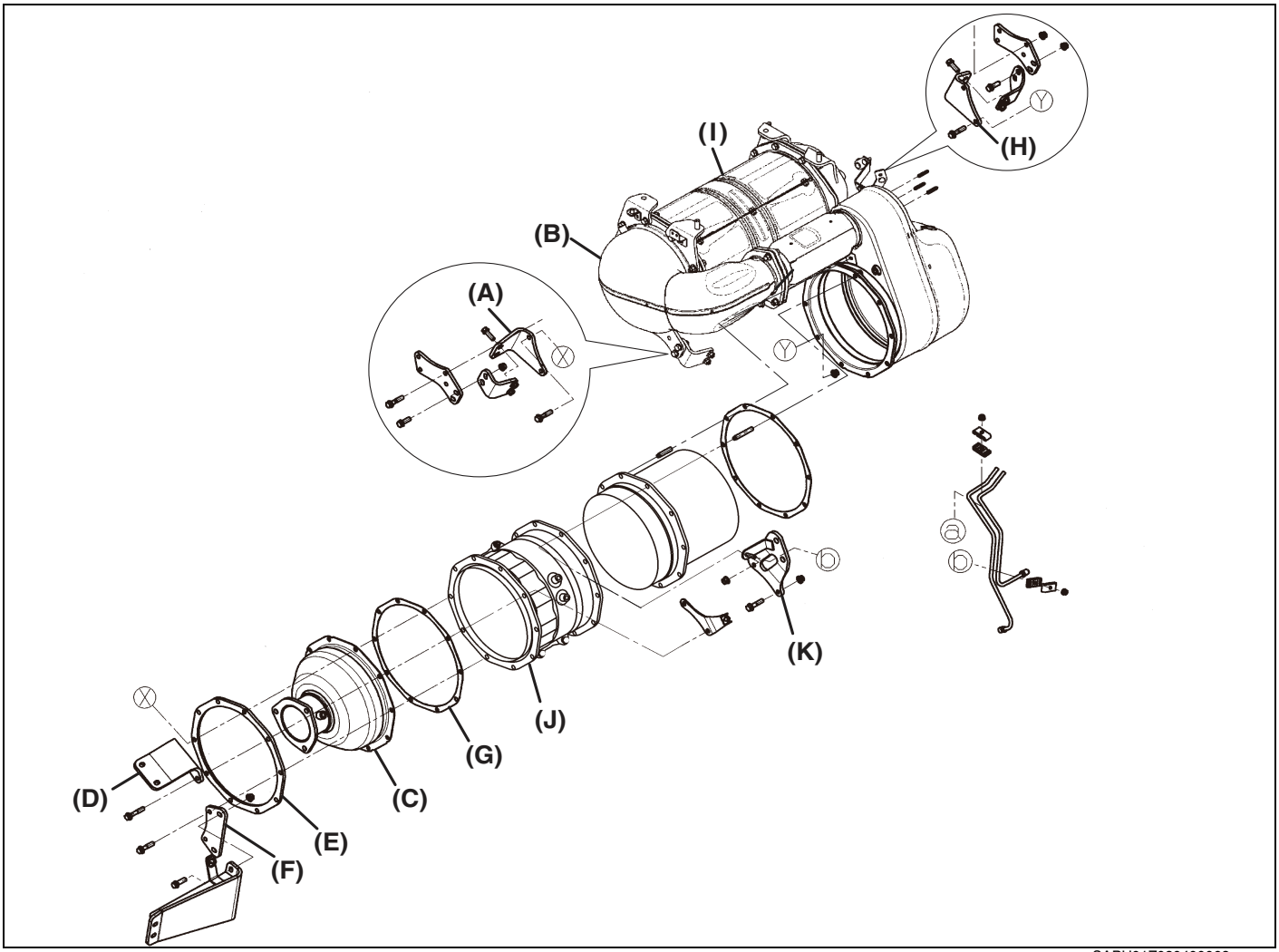


SAPH01Z080400068

(9) Mount the muffler unit to the vehicle.
**Reference: EXHAUST SYSTEM (J08E), EXHAUST PIPE AND MUFFLER UNIT, OVERHAUL, IMPORTANT POINT -MOUNTING (Page EN04-19)**

# OVERALL OPERATION FLOW

EN01Z0804H100003

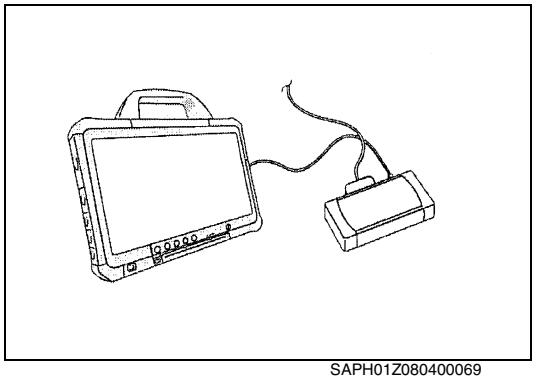

SAPH01Z080400069

**1. VEHICLE RECEIPT FOR INSPECTION**

(1) Check the malfunction code with the HINO DX II .
**Standard value: No malfunction code**

NO

YES

- 4. For P141F, P200C, P244B, P2002, P244A, P2459, P2463
- 5. For others than above

2. MANUAL REGENERATION

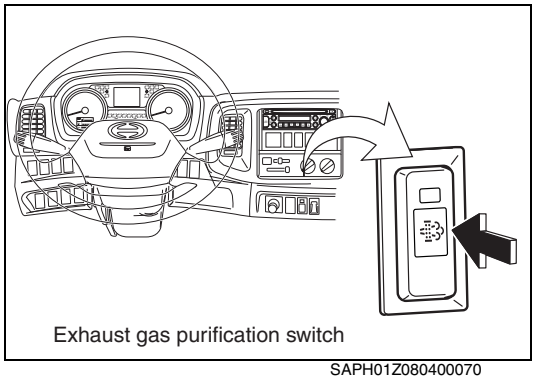

Exhaust gas purification switch

SAPH01Z080400070

**2. MANUAL REGENERATION**

(1) After a manual regeneration, check the differential pressure with the HINO DX II .
**Standard value:**
**Refer to "LIST OF STANDARD VALUES FOR DIFFERENTIAL PRESSURE INSPECTION" on page EN04-12.**

NO

YES

3. INSPECT THE DPR FILTER.

No clean up necessary
Vehicle delivery

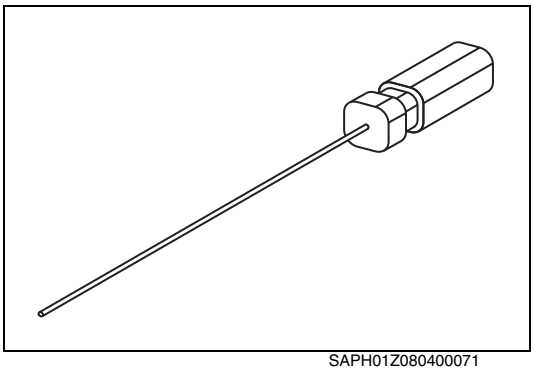

SAPH01Z080400071

**3. INSPECT THE DPR FILTER.**

(1) Dismount the DPR filter from the vehicle.
**Refer to "1. REMOVE THE DPR FILTER" on page EN04-41.**

(2) Inspect the status of the DPR filter rear surface.
**Refer to "INSPECT INSIDE THE DPR FILTER" on page EN04-49.**
**Standard value: No soot escape**

NO

Replace the DPR filter with a new one and install it on the vehicle. At the same time, also replace the PM sensor with a new one.
**Refer to "2. INSTALL THE DPR FILTER" on page EN04-42.**
**NOTICE**
**Recheck the differential pressure after the installation. Make sure it is within the standard value and deliver the vehicle.**

YES

Perform ash cleaning to the DPR filter and then install it on the vehicle.
**Refer to "2. INSTALL THE DPR FILTER" on page EN04-42**.
**NOTICE**
**Recheck the differential pressure after the installation. Make sure it is within the standard value and deliver the vehicle.**

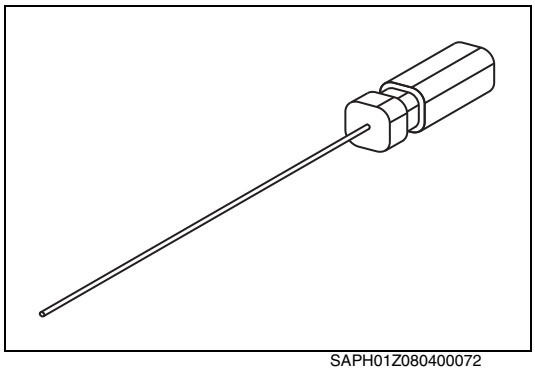
SAPH01Z080400072

**4. IN CASE THAT DPR DTC CODE IS DISPLAYED**

(1) Dismount the DPR filter from the vehicle.
**Refer to "1. REMOVE THE DPR FILTER" on page EN04-41.**

(2) Inspect the status of the DPR filter rear surface.
**Refer to "INSPECT INSIDE THE DPR FILTER" on page EN04-49.**
**Standard value: No soot escape**

NO

Replace the DPR filter with a new one and install it on the vehicle. At the same time, also replace the PM sensor with a new one.
**Refer to "2. INSTALL THE DPR FILTER" on page EN04-42**.

**NOTICE**
**After the installation, regenerate the DPR filter manually and recheck the differential pressure. Make sure it is within the standard value and deliver the vehicle.**

YES

Perform soot cleaning to the DPR filter and then install it on the vehicle.
**Refer to "2. INSTALL THE DPR FILTER" on page EN04-42.**

**NOTICE**
**After the installation, regenerate the DPR cleaner manually and recheck the differential pressure. Make sure it is within the standard value and deliver the vehicle.**

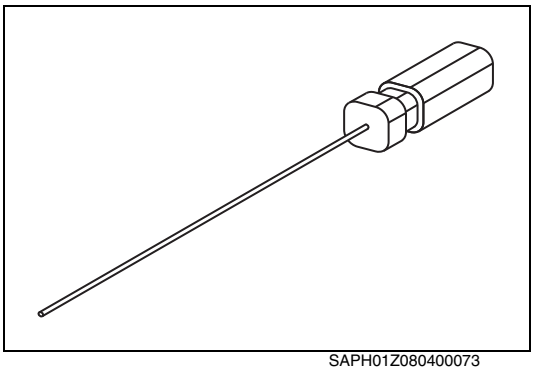

SAPH01Z080400073

**5. FOR OTHERS THAN DPR DTC CODE IS DISPLAYED**

(1) Check the engine body and repair or replace defective parts if any.

(2) Dismount the DPR filter from the vehicle.
**Refer to "1. REMOVE THE DPR FILTER" on page EN04-41.**

(3) Inspect the status of the DPR filter rear surface.
**Refer to "INSPECT INSIDE THE DPR FILTER" on page EN04-49.**

**Standard value: No soot escape**

NO

YES

Replace the DPR filter with a new one and install it on the vehicle. At the same time, also replace the PM sensor with a new one.
**Refer to "2. INSTALL THE DPR FILTER" on page EN04-42.**
**NOTICE**
**After the installation, regenerate the DPR cleaner manually and recheck the differential pressure. Make sure it is within the standard value and deliver the vehicle.**

Perform soot cleaning to the DPR filter and then install it on the vehicle.
**Refer to "2. INSTALL THE DPR FILTER" on page EN04-42.**
**NOTICE**

- **After the installation, regenerate the DPR cleaner manually and recheck the differential pressure. Make sure it is within the standard value and deliver the vehicle.**
- **If the differential pressure is out of the standard value, perform ash cleaning.**

## LIST OF STANDARD VALUES FOR DIFFERENTIAL PRESSURE INSPECTION

| Engine type | Engine no-load maximum revolution speed (r/min) | Differential pressure (kPa {kgf/cm$^2$, lbf/in.$^2$}) |
|---|---|---|
| J08E | 2,800 | 5.0 {0.05, 0.7} |

## INSPECT INSIDE THE DPR FILTER.

**HINT**

**This is for detecting abnormalities inside the DPR filter.**

**1. VISUALLY INSPECT THE FILER REAR SURFACE.**

(1) Visually inspect the filter rear surface to detect soot escapes (black part).
**Standard value: No soot escape**

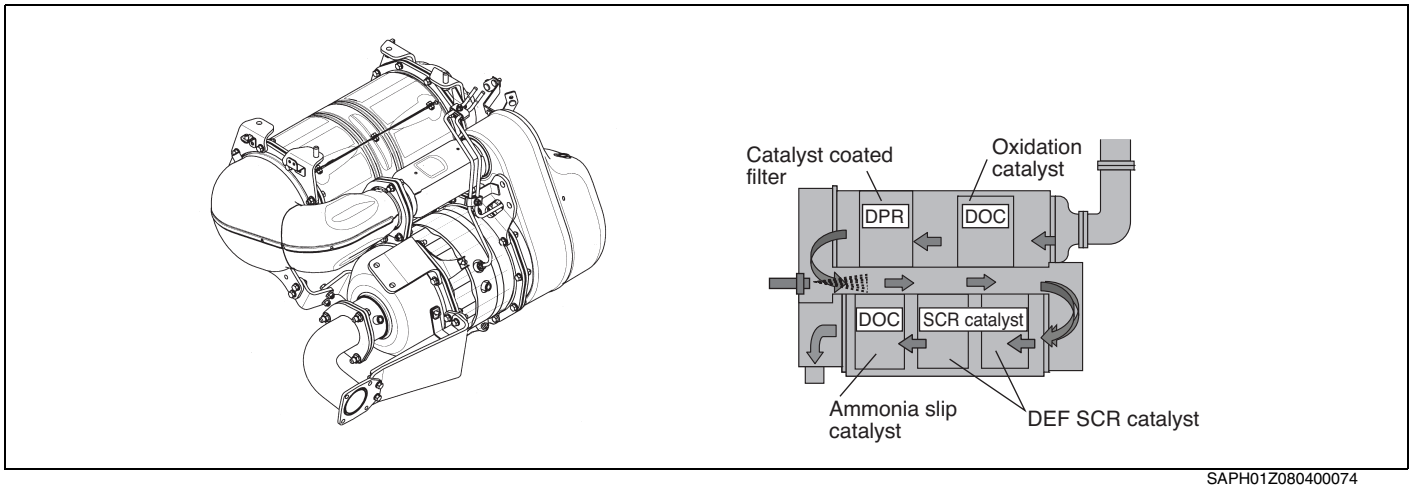


SAPH01Z080400074

NO

YES

3. **INSPECT THE DPR FILTER WITH THE DEDICATED CHECK PROBE.**

2. VISUALLY INSPECT THE CASE EDGE.

**2. VISUALLY INSPECT THE CASE EDGE.**

(1) Visually inspect the case edge to detect soot escapes (black part).

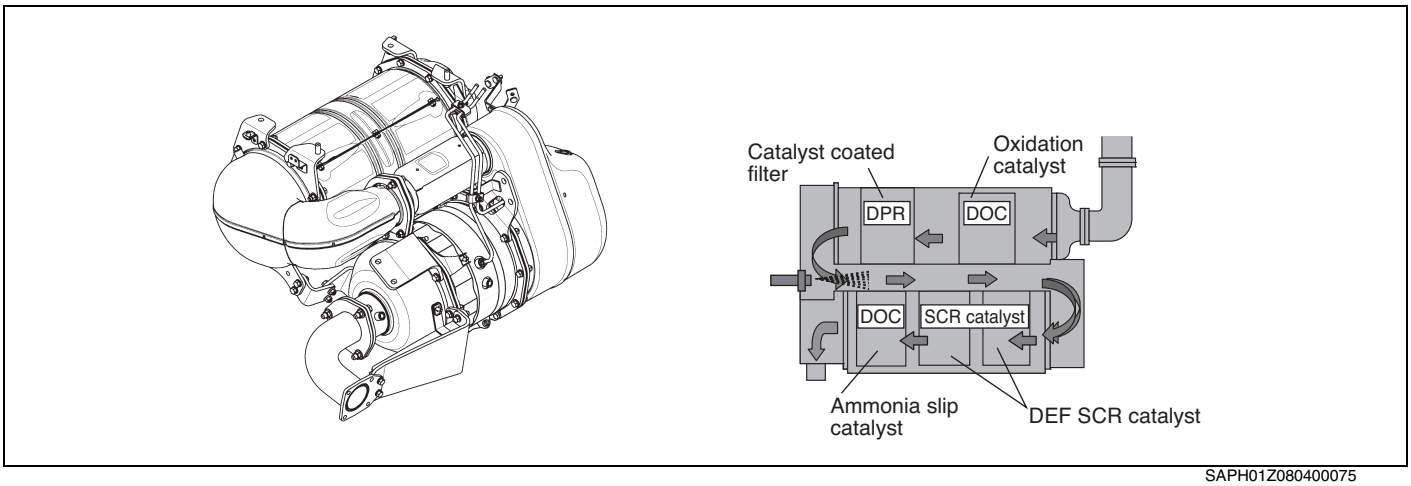


SAPH01Z080400075

**Standard value: No soot escape**

NO

YES

**3. INSPECT THE DPR FILTER WITH THE DEDICATED CHECK PROBE.**

The DPR filter is normal.

**3. INSPECT THE DPR FILTER WITH THE DEDICATED CHECK PROBE.**

(1) Insert the check probe from the rear surface to inspect the inside.
**SST: FILTER GAGE ASSEMBLY (BOSCH part No. HDT650590)**

**⚠ CAUTION**

- **DPR filter internal wall may be damaged if the check probe is significantly bent or skewed. Repair or replace the check probe.**
- **Do not force the check probe into the DPR filter or push the check probe past the DPR filter length, otherwise DPR filter may be damaged.**

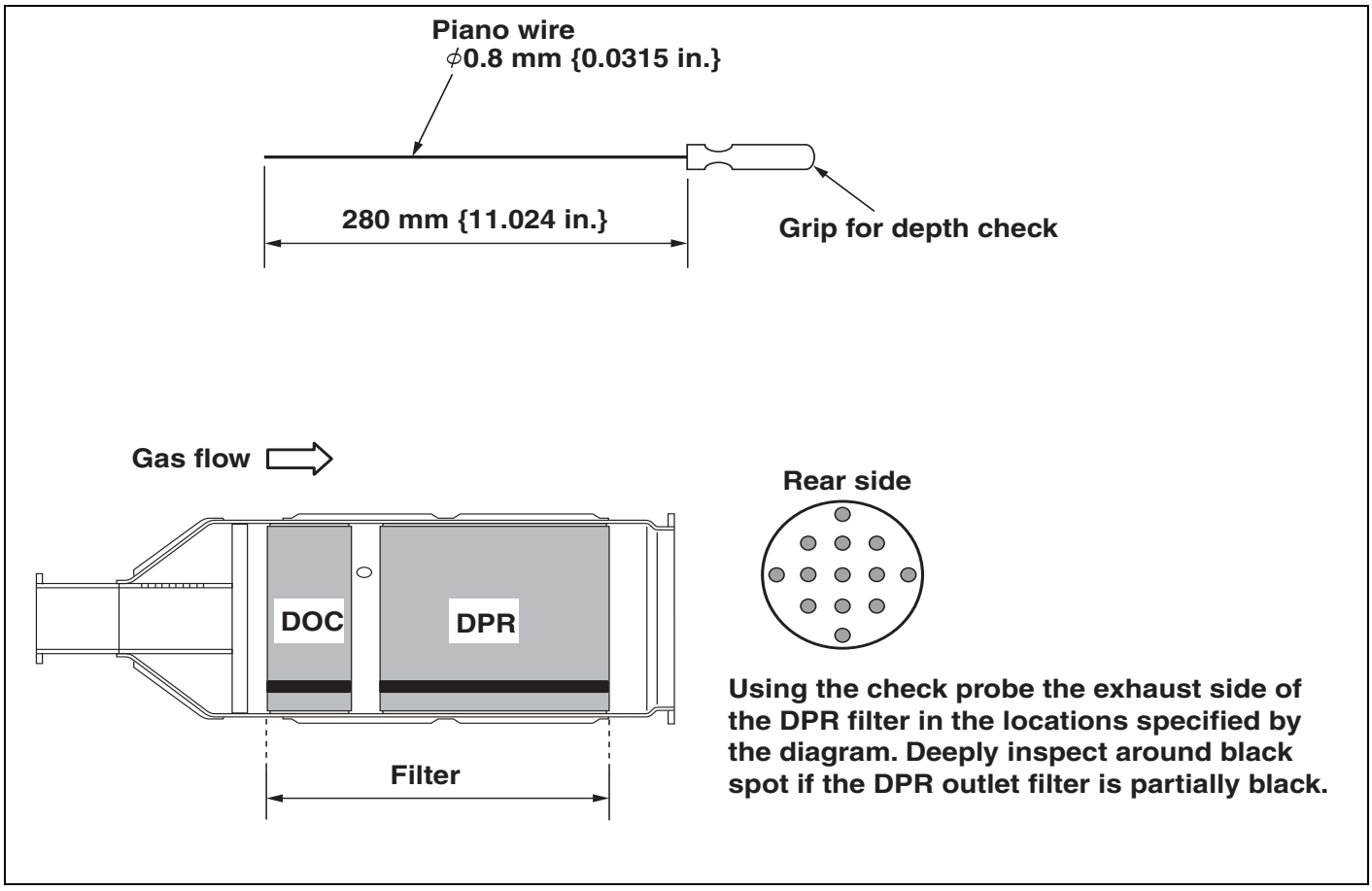


SAPH01Z080400076

(2) Does the check probe reach the desired depth?

**Unit: mm {in.}**

| Relevant models | Standard value (Desired depth) |
|---|---|
| **2008-2010MY (HINO 145, 165, 185, 238, 258, 268, 308, 338)** | **237.5-250.5 {9.351-9.862}** |
| **2008-2018MY (HINO 155, 195, 155h, 195h)** | |
| **2011-2018MY (HINO 238, 258, 268, 338, 358)** | **175.9-184.9 {6.926-7.279}** |

NO

YES

**Replace the DPR filter with a new one and install it on the vehicle. At the same time, also replace the PM sensor with a new one.**
**Refer to "2. INSTALL THE DPR FILTER" on page EN04-42.**

**DPR filter is normal, clean the tail pipe and then install it on the vehicle.**
**Refer to "2. INSTALL THE DPR FILTER" on page EN04-42.**

## AIR CLEANING FLOW

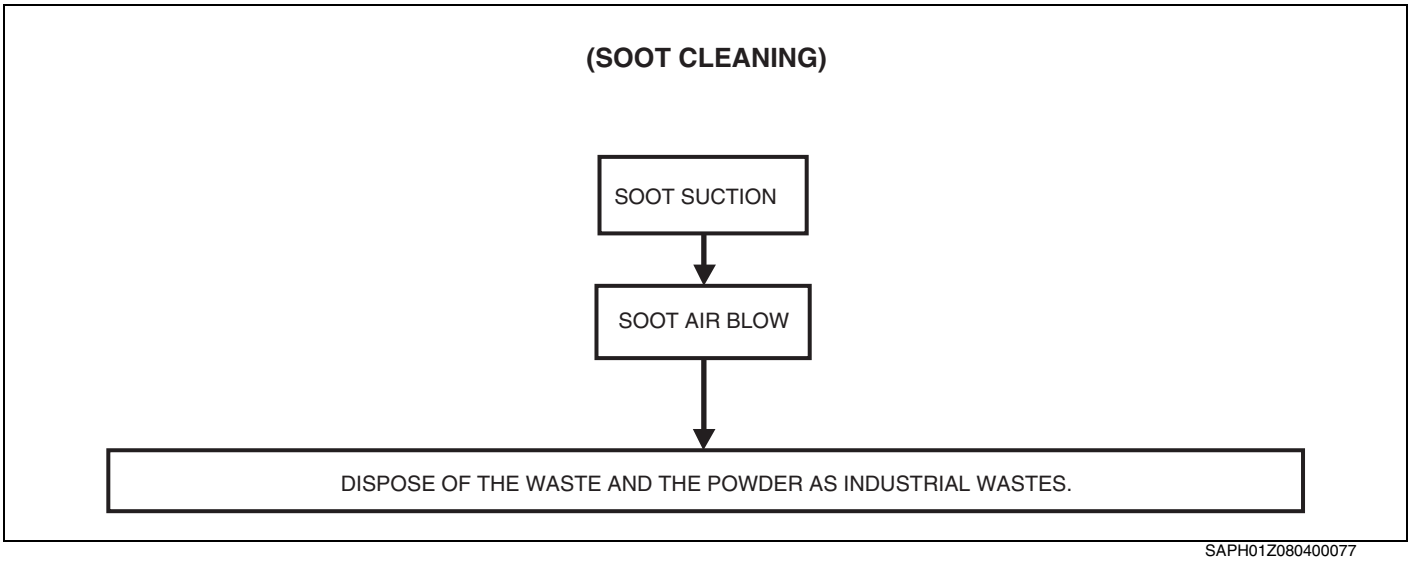


SAPH01Z080400077

# DIFFERENTIAL PRESSURE SENSOR

## COMPONENT LOCATOR

EN01Z0804D100005

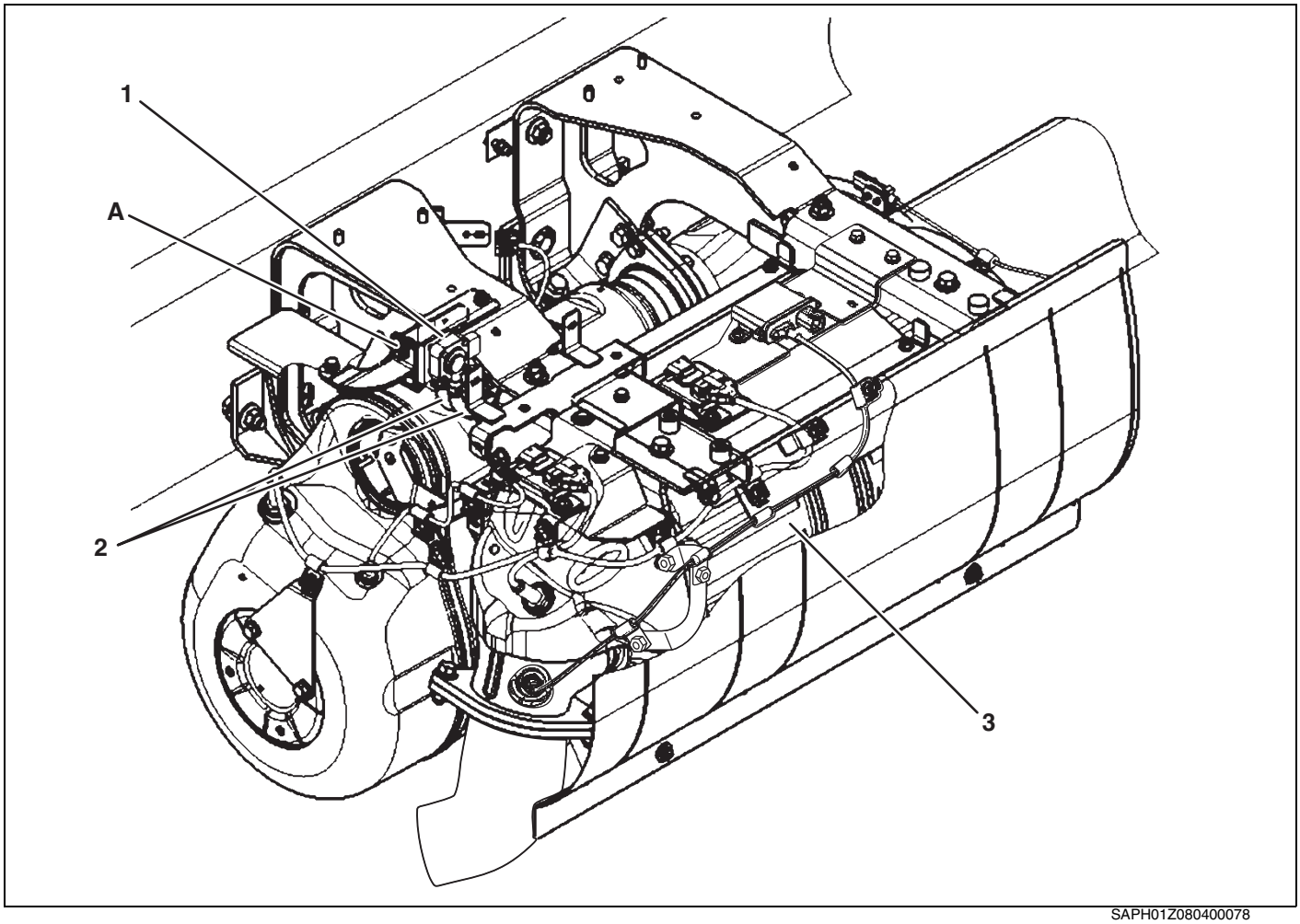


SAPH01Z080400078

| | | | |
|---|---|---|---|
| 1 | Differential pressure sensor | 3 | Muffler unit |
| 2 | Hose | | |

**Tightening torque** **Unit: N·m {kgf·cm, lbf·ft}**

| | | | |
|---|---|---|---|
| A | 18-26 {183-265, 13-19} | | |

# DISMOUNTING AND MOUNTING

EN01Z0804H100004

## REMOVAL OF THE DIFFERENTIAL PRESSURE SENSOR

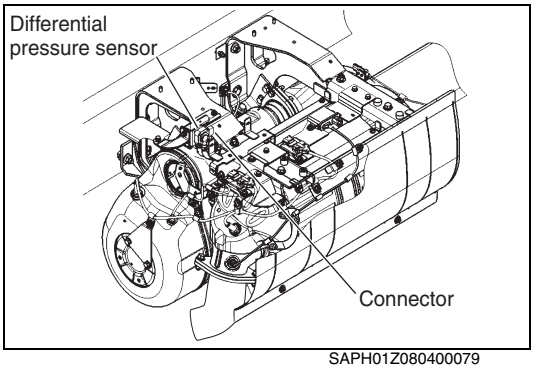

SAPH01Z080400079

**1. REMOVE THE HARNESS.**

(1) Disconnect the connector attached to the differential pressure sensor.

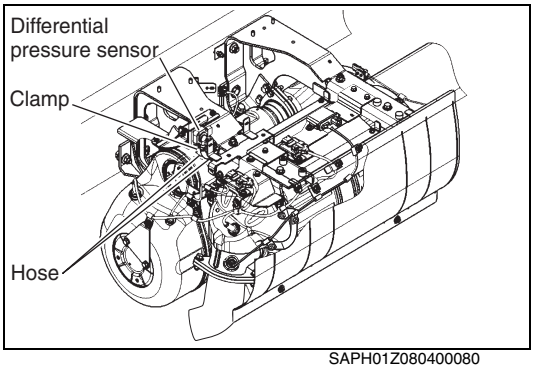

SAPH01Z080400080

**2. DISCONNECT THE HOSE.**

(1) Remove the clamps and disconnect the hose from the differential pressure sensor.

**NOTICE**

**Do not allow foreign objects to get into the differential pressure pipe and hose.**

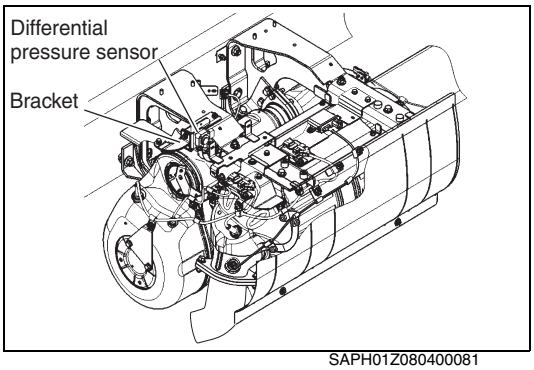

SAPH01Z080400081

**3. REMOVE THE DPR DIFFERENTIAL PRESSURE SENSOR.**

(1) Remove the nut and the differential pressure sensor from the bracket.

# INSPECTION AND REPAIR

EN01Z0804H100005

| Items | Content | Action | Travel distance |
|---|---|---|---|
| Hose for differential pressure sensor | Replacement | Replacement | 3 years |

## UNIT CHECK

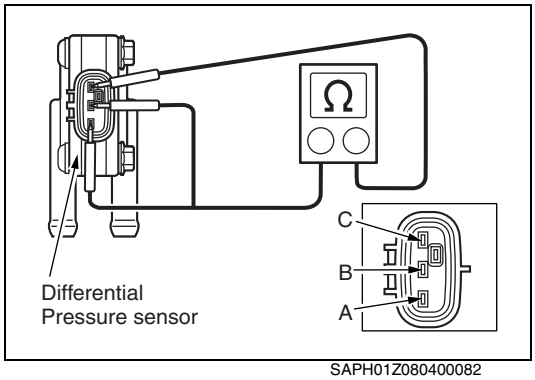

SAPH01Z080400082

**1. RESISTANCE CHECK**

(1) Measure the resistance of the differential pressure sensor with a circuit tester. If the value exceeds the standard value, replace it.

| Measurement item | Standard value (kΩ) |
|---|---|
| **A ↔ B** | **15** |
| **B ↔ C** | **15** |

## INSTALL THE DIFFERENTIAL PRESSURE SENSOR.

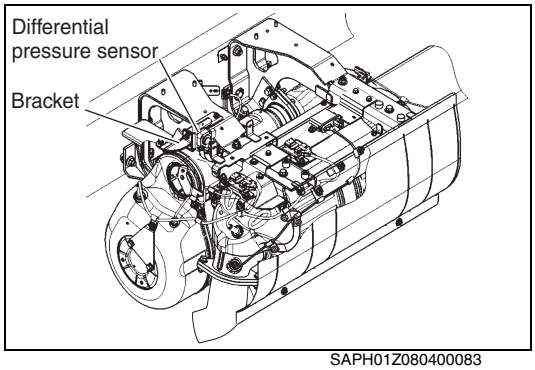

SAPH01Z080400083

**1. INSTALL THE DIFFERENTIAL PRESSURE SENSOR.**

(1) Install the differential pressure sensor to the bracket with a nut.

**Tightening Torque: 18-26 N·m {183-265 kgf·cm, 13-19 lbf·ft}**

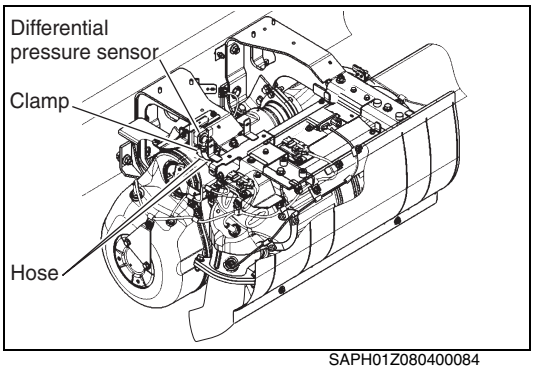

SAPH01Z080400084

**2. CONNECT THE HOSE.**

(1) Install the hose to the differential pressure sensor with clamps (4 pcs).

**NOTICE**

**If the differential pressure sensor hose is inserted incorrectly, the DPR will not operate properly.**

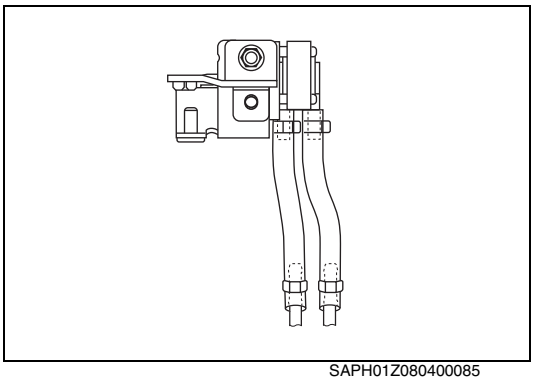
SAPH01Z080400085

**⚠ CAUTION**

- **Insert the hoses certainly against the sensor body.**
- **Insert the hoses certainly against the pipe spool.**

**3. INSTALL THE HARNESS.**

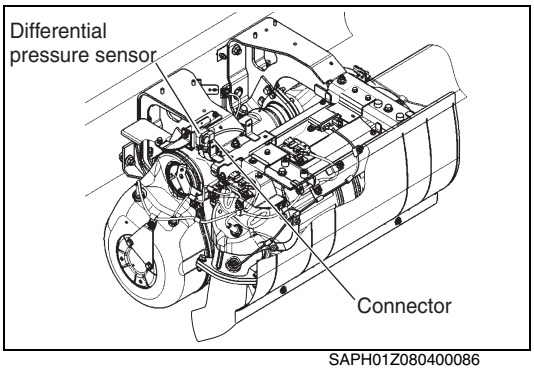

SAPH01Z080400086

(1) Connect the connector to the differential pressure sensor.

# AFTERTREATMENT FUEL INJECTOR

## COMPONENT LOCATOR

EN01Z0804D100006

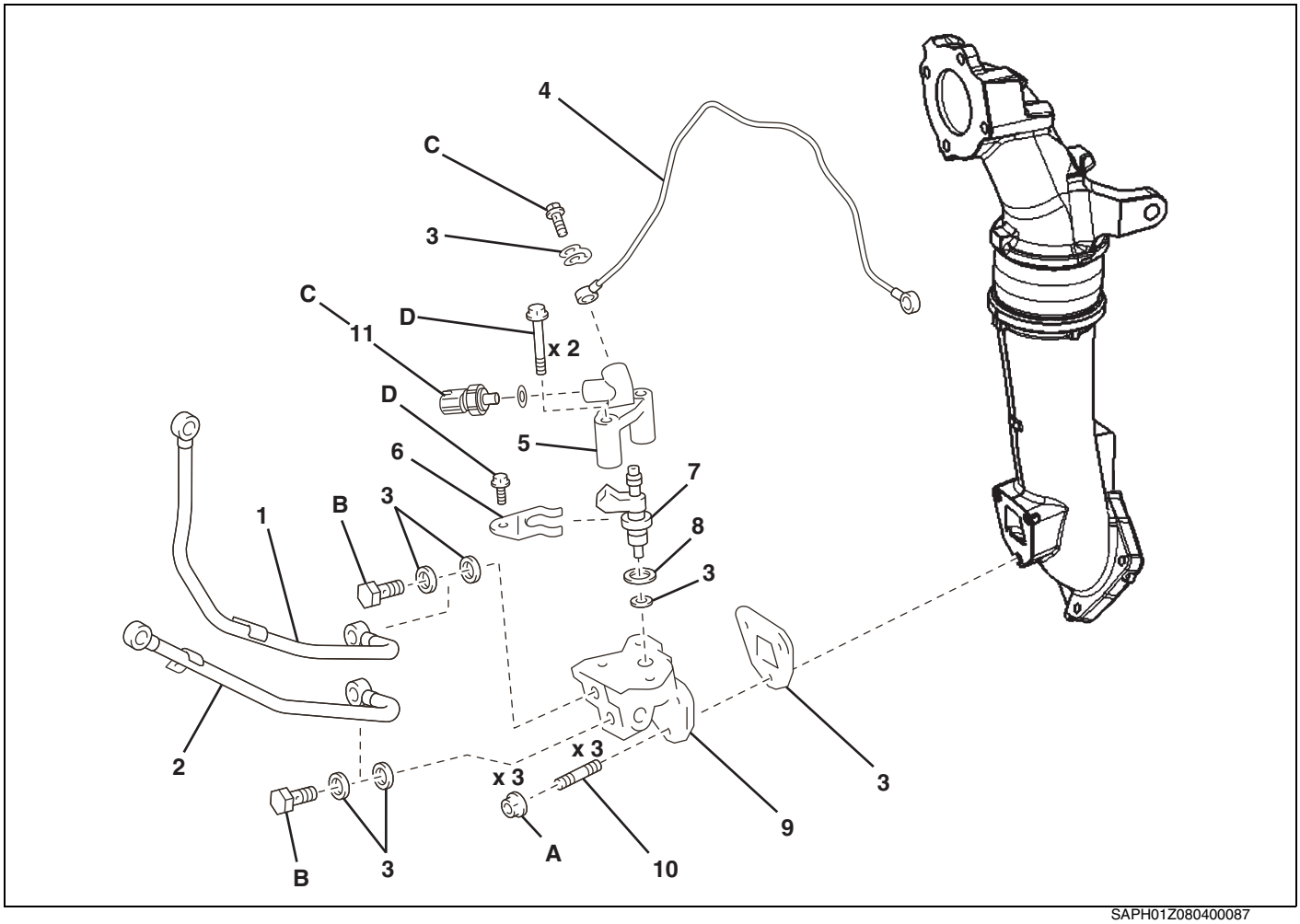


SAPH01Z080400087

| | | | |
|---|---|---|---|
| 1 | Coolant pipe D | 6 | Nozzle clamp |
| 2 | Coolant pipe E | 7 | Aftertreatment fuel injector |
| 3 | Gasket * | 8 | O-ring * |
| 4 | Fuel feed pipe No.5 | 9 | Holder |
| 5 | Fuel delivery | 10 | Stud Bolt |
| | | 11 | Aftertreatment fuel injection line pressure sensor |

***: Nonreusable. Be sure to use new parts.**

**Tightening torque** **Unit: N·m {kgf·cm, lbf·ft}**

| | | | |
|---|---|---|---|
| A | 36 {367, 26.5} | C | 19.6 {200, 14.5} |
| B | 24.5 {250, 18.1} | D | 28.5 {290, 21.0} |

# OVERHAUL

EN01Z0804H100006

## REMOVING THE AFTERTREATMENT FUEL INJECTOR

**⚠ CAUTION**

- **Perform replacement after cooling to prevent burns. (Turn the starter key to the "LOCK" position and leave it for more than 30 minutes to cool.)**

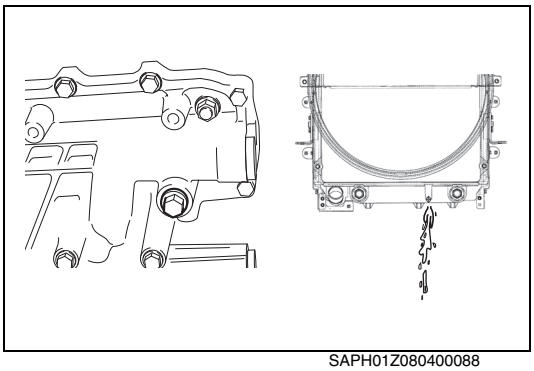

SAPH01Z080400088

### 1. DRAINING THE COOLANT

(1) Drain coolant from the drain cock of the radiator and the drain plug of the oil cooler.

**⚠ WARNING**

**To avoid burns, do not remove the radiator cap when the engine and the radiator are hot. Pressure causes the liquid and vapor to burst forth**

**⚠ CAUTION**

**Dispose the coolant in accordance with the specified procedures (industrial waste disposal) or other environment-friendly practices.**

**NOTICE**

**With the radiator cap removed, coolant can be drained faster.**

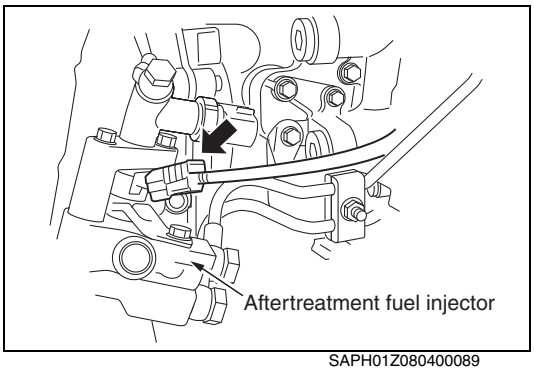


SAPH01Z080400089

### 2. DISCONNECTING THE HARNESS

(1) Disconnect the connector from the aftertreatment fuel injector.

**⚠ CAUTION**

**When disconnecting, do not apply excessive force to the connector on the fuel addition valve side. The connector may be damaged.**

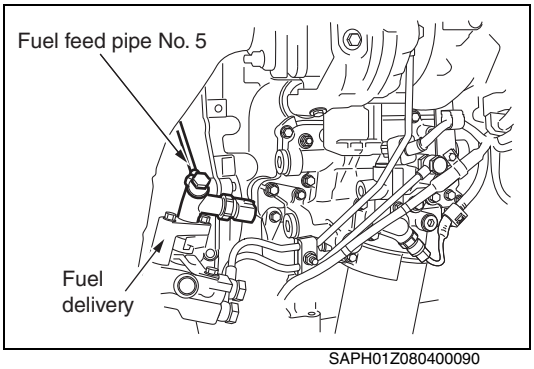


SAPH01Z080400090

### 3. DISCONNECTING PIPES

(1) Unfasten the union bolt to remove the fuel feed pipe No.5 and gaskets (2 pcs.) from the fuel delivery.

**NOTICE**

**Prepare the reservoir and waste to collect dripping fuel when disconnecting the pipe.**

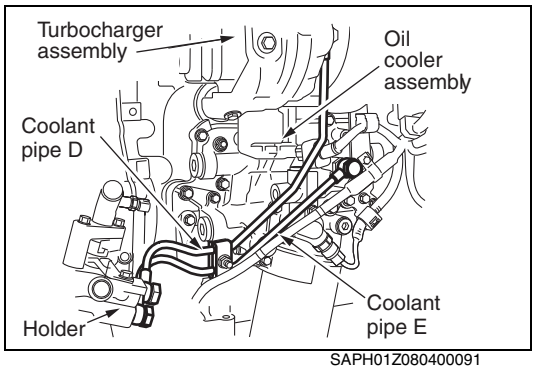

SAPH01Z080400091

(2) Remove the nut and then the clip.

(3) Unfasten the union bolts (2 pcs.) to remove the coolant pipe D and gaskets (4 pcs.) from the holder and turbocharger assembly.

**⚠ CAUTION**
**Pay attention to weight balance.**

**NOTICE**
**Prepare the reservoir and clean clothes to collect dripping coolant when disconnecting the pipe.**

(4) Unfasten the union bolts (2 pcs.) to remove the coolant pipe E and gaskets (4 pcs.) from the holder and oil cooler assembly.

**NOTICE**
**Prepare the reservoir and clean clothes to collect dripping coolant when disconnecting the pipe.**

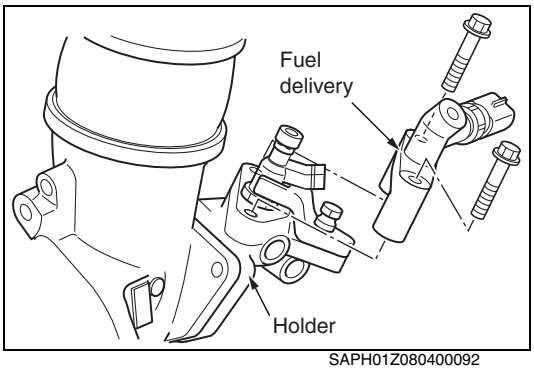

SAPH01Z080400092

**4. REMOVING THE AFTERTREATMENT FUEL INJECTOR**

(1) Unfasten the bolts (2 pcs.) to remove the fuel delivery from the holder.

**⚠ CAUTION**

- **Do not allow the O-ring on the aftertreatment fuel injector to come off. If it came off, mount the O-ring following "How to mount the aftertreatment fuel injector O-ring".**
- **If it did not come off, it can be reused.**

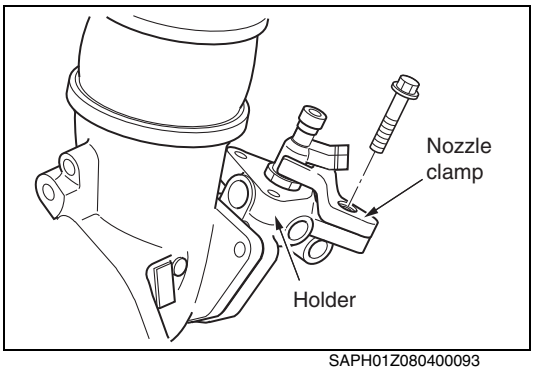

SAPH01Z080400093

(2) Unfasten the bolt to remove the nozzle clamp from the holder.

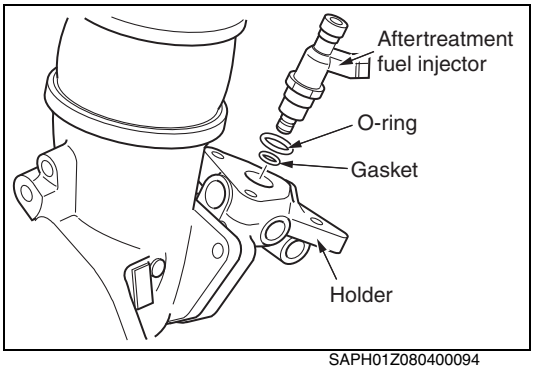

SAPH01Z080400094

(3) Remove the aftertreatment fuel injector, O-ring, and gasket from the holder.

**⚠ CAUTION**

**When overhauling a aftertreatment fuel injector, not to damage an electrical connector part, hang finger on a connector area, push, or work not to apply excessive power.**

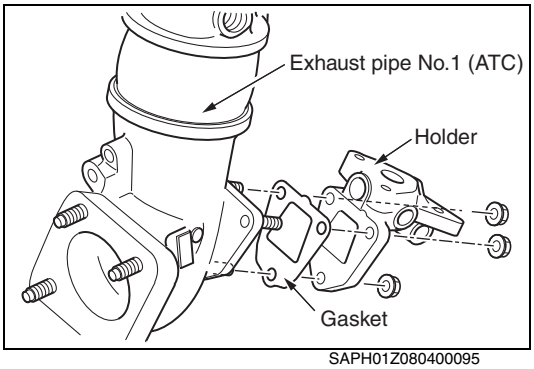

SAPH01Z080400095

(4) Unfasten the nuts (3 pcs.) to remove the holder and gasket from the exhaust pipe No.1 (ATC).

## HOW TO MOUNT THE AFTERTREATMENT FUEL INJECTOR

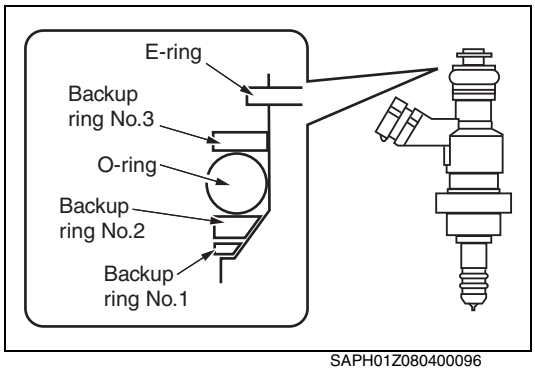

SAPH01Z080400096

### 1. CAUTIONS

(1) Replace with a new O-ring, backup ring, and E-ring and mount them as shown in the figure.

**⚠ CAUTION**

- **Mount the backup ring No.1 and No.2 paying attention to their directions.**
- **Mount the backup ring and O-ring in the right order.**

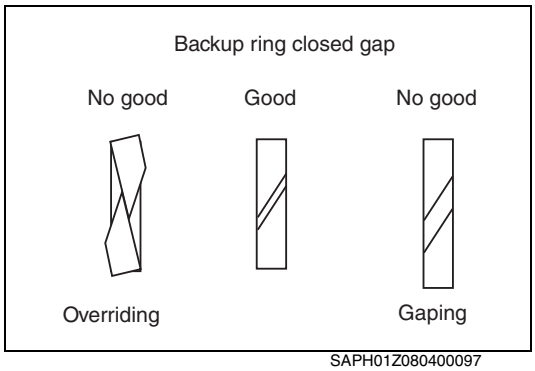

SAPH01Z080400097

- **Check the backup ring closed gap for overriding and gaping as shown in the figure.**

### 2. CHECKING AFTER MOUNTING

(1) After mounting the O-ring, backup ring, and E-ring to the aftertreatment fuel injector, check the seal for damage, collapse, and protrusion from the seal groove.

**⚠ CAUTION**

**Check the O-ring groove of the aftertreatment fuel injector for foreign matter or damage.**

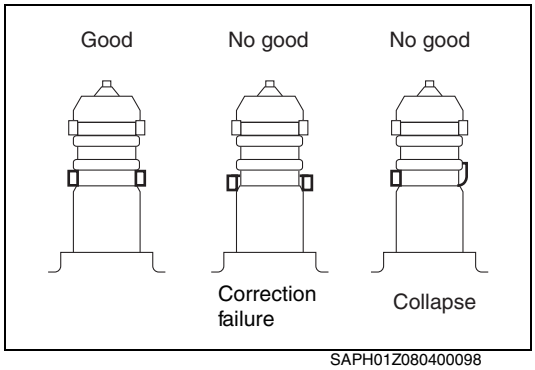

SAPH01Z080400098

## SINGLE UNIT INSPECTION

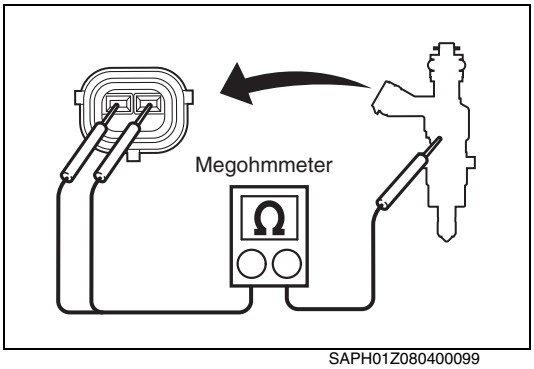

SAPH01Z080400099

**1. INSULATION RESISTANCE TEST**

(1) Using the 500 V megohmmeter, measure the insulation resistance between the aftertreatment fuel injector upper body and connector (part side). Replace if the measurement reading exceeds the standard value.

| Standard value (Room temperature) | 10MΩ or more (Using the 500 V megohmmeter) |
|---|---|

**⚠ CAUTION**

**Never measure between the terminals, or the aftertreatment fuel injector will be damaged.**

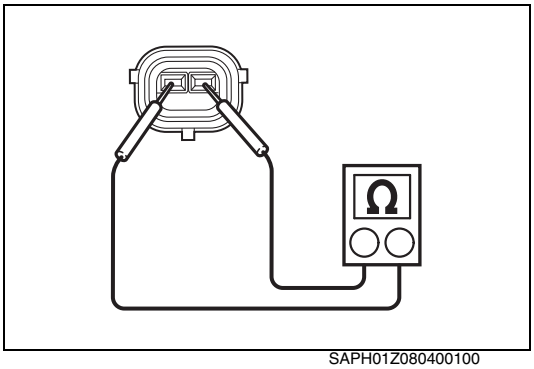
SAPH01Z080400100

**2. RESISTANCE TEST BETWEEN TERMINALS**

(1) Using the circuit tester, measure the resistance between the aftertreatment fuel injector terminals. Replace if the measurement reading exceeds the standard value.

| Standard value (20°C {68°F}) | 7.1-7.9Ω |
|---|---|

## CLEANING CARBON

### 1. CLEANING CARBON

**⚠ CAUTION**

- **The carbon cleaner is alkali. Wear protective equipment (glasses, rubber gloves, and protective garment) to prevent it from contacting eyes, skin, and clothes.**
  **If it should contact the skin, wash it off with running water immediately. If it should get into eyes, rinse thoroughly with running water and consult a physician.**
- **Do not allow the carbon cleaner to adhere to the resin parts, terminals, and O-ring of the aftertreatment fuel injector. If adhered, immediately wipe it off.**

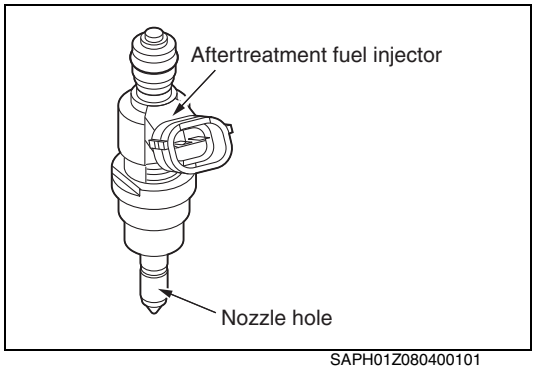

SAPH01Z080400101

(1) Spray the carbon cleaner to the aftertreatment fuel injector nozzle hole.

**SST: Carbon cleaner (S0826-E3065)**

**⚠ CAUTION**

- **Do not touch the nozzle hole with hands or wipe it with a waste.**
- **Do not apply excessive force or weight to the connector to avoid the risk of breakage.**

(2) Leave it for a while until carbon is dissolved and then blow it off by an air blower.

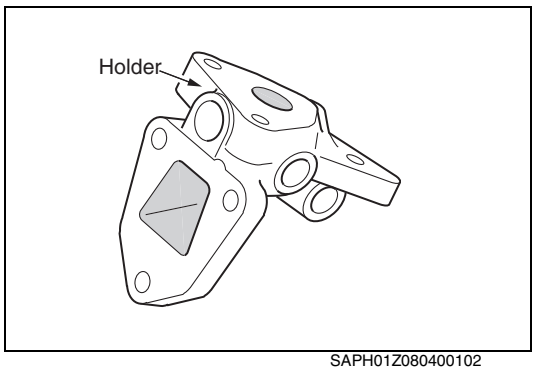

SAPH01Z080400102

(3) Similarly, remove the carbon deposited inside the holder by air blowing after spraying the carbon cleaner.

## MOUNTING THE AFTERTREATMENT FUEL INJECTOR

**⚠ CAUTION**

- **While working, do not allow dirt and water to enter the parts.**
- **Before mounting parts, make sure that there is no dirt on the connection between them.**
- **Air enters the fuel pipe in the process of mounting the pre fuel filter case. After mounting is completed, thoroughly purge air from the fuel pipe.**

### 1. MOUNTING THE AFTERTREATMENT FUEL INJECTOR

**NOTICE**

- **Never reuse the gasket or O-ring as it may cause engine damage.**

(1) Replace with a gasket and mount the holder to the exhaust pipe No.1 (ATC) with nuts (3 pcs.).
**Tightening Torque:**
**36 N·m {367 kgf·cm, 26.5 lbf·ft}**

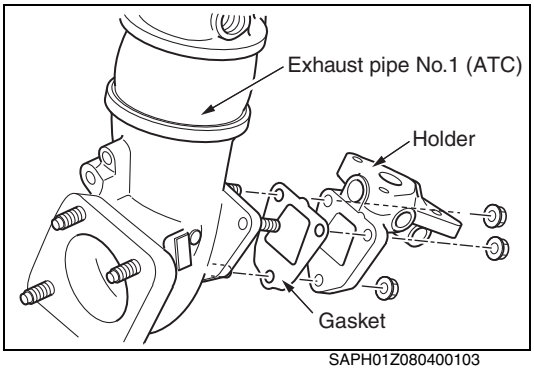

SAPH01Z080400103

(2) Replace with a O-ring and gasket and mount the aftertreatment fuel injector to the holder.

**⚠ CAUTION**

- **Apply engine oil to the O-ring. Use care not to get the O-ring jammed when inserting.**
- **Do not apply excessive force or weight to the connector to avoid the risk of breakage.**
- **Check the O-ring seal for dirt before mounting.**
- **Take care not to damage or bend the nozzle head part when installing the aftertreatment fuel injector into the holder.**

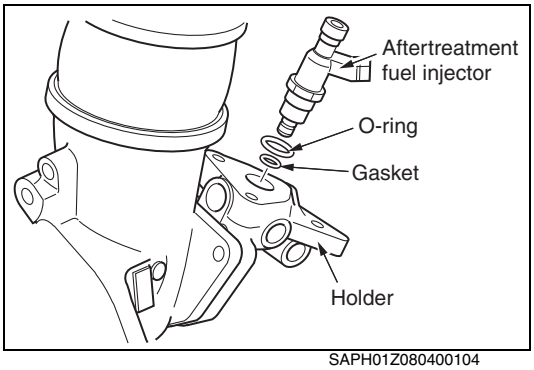

SAPH01Z080400104

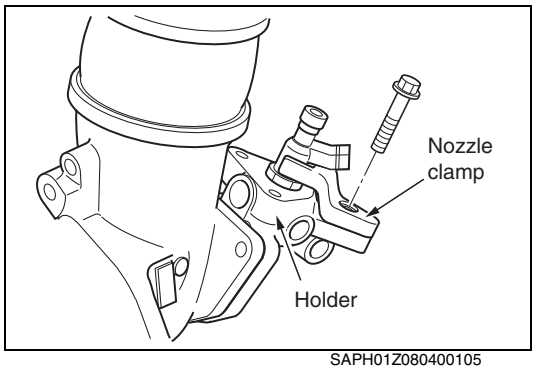

SAPH01Z080400105

(3) Mount the nozzle clamp to the holder with the bolt.

**Tightening Torque:**
**28.5 N·m {290 kgf·cm, 21.0 lbf·ft}**

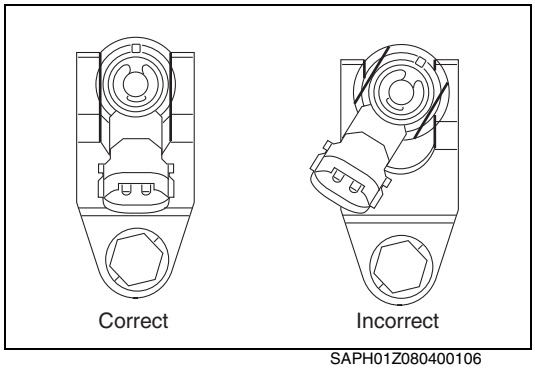

SAPH01Z080400106

**⚠ CAUTION**
- **When mounting the nozzle clamp to the holder, align the nozzle clamp with the aftertreatment fuel injector groove.**
- **If the nozzle clamp is mounted without aligning with the aftertreatment fuel injector, it cannot be reused.**

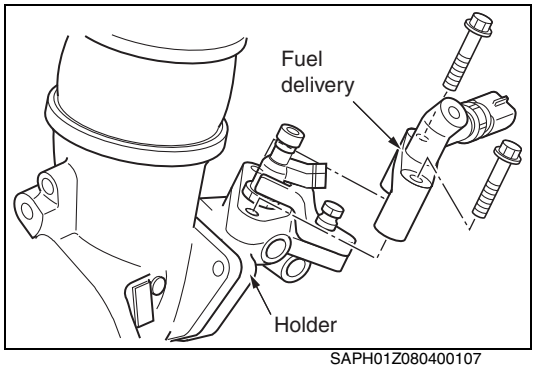

SAPH01Z080400107

(4) Mount the fuel delivery to the holder with the bolts (2 pcs.).

**Tightening Torque:**
**28.5 N·m {290 kgf·cm, 21.0 lbf·ft}**

**⚠ CAUTION**
- **Apply engine oil to the O-ring. Use care not to get the O-ring jammed when inserting the fuel delivery.**
- **Check the O-ring seal for dirt before mounting.**

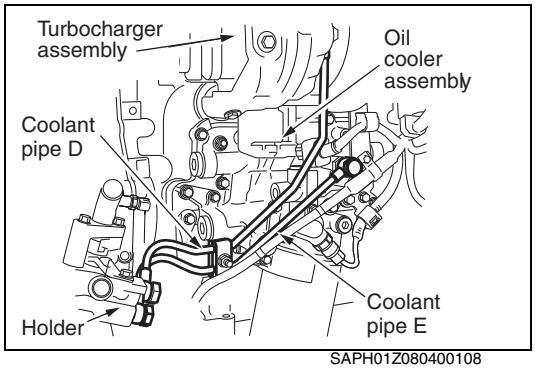

SAPH01Z080400108

**2. CONNECTING PIPES**

(1) Replace with gaskets (4 pcs.) and connect the coolant pipe E to the holder and oil cooler assembly with union bolts (2 pcs.).
**Tightening Torque:**
**24.5 N·m {250 kgf·cm, 18.1 lbf·ft}**

(2) Replace with gaskets (4 pcs.) and connect the coolant pipe D to the holder and turbocharger assembly with union bolts (2 pcs.).
**Tightening Torque:**
**24.5 N·m {250 kgf·cm, 18.1 lbf·ft}**

(3) Mount the clip with the nut and secure the coolant pipe D and coolant pipe E.

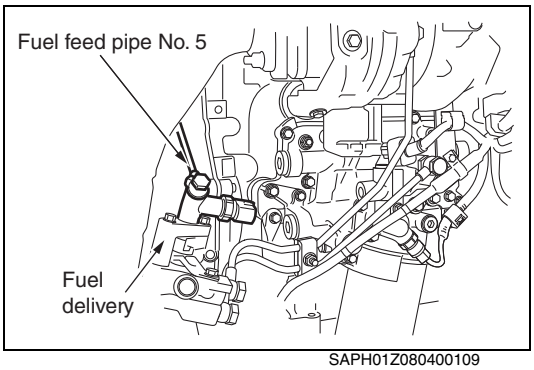

SAPH01Z080400109

(4) Replace with 2 new gaskets and connect the fuel feed pipe No.5 to the fuel delivery with the union bolt.

**Tightening Torque:**
**19.6 N·m {200 kgf·cm, 14.5 lbf·ft}**

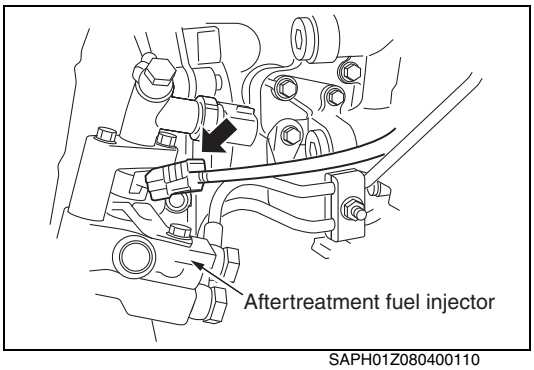

SAPH01Z080400110

**3. CONNECTING THE HARNESS**

(1) Connect the connector to the aftertreatment fuel injector.

**⚠ CAUTION**

- **Before inserting the connector, check that there are no spark traces on the terminals.**
- **When connecting, do not apply excessive force to the connector on the aftertreatment fuel injector side. The connector may be damaged.**

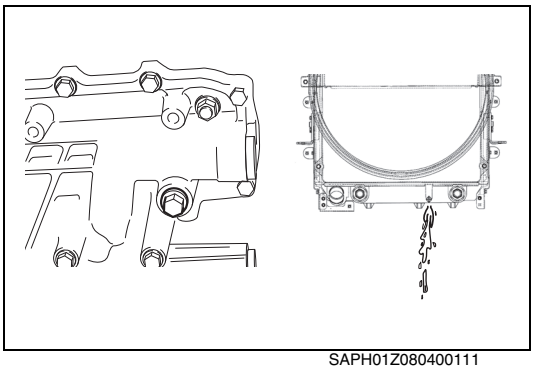
SAPH01Z080400111

**4. ADDING THE COOLANT**

(1) Tighten the drain cock of the radiator and the drain plug of the oil cooler.
(2) Remove the radiator cap.

**⚠ CAUTION**

**Improper or careless removal of the radiator cap may cause burns from spewing hot water or vapor. Remove the cap after the coolant temperature meter reads below the specified temperature.**

(3) Top up with coolant to the inlet.

**⚠ CAUTION**

- **A sudden injection prevents air in the cooling pipe system from bleeding smoothly, resulting in a prolonged injection.**
- **If air blows back, once stop adding coolant and wait for a while before resuming.**

**NOTICE**

**Bring pressure on the two radiator hoses for a few times with hands. If the coolant level of the radiator inlet decreases, add coolant.**

(4) Mount the radiator cap.
(5) Add the coolant into the reserve tank to FULL, and tighten the cap.
(6) Warm up the engine until the thermostat injection valve opens.

**NOTICE**

**Bring pressure on the 2 radiator hoses for a few times during engine warming up**

(7) After stopping the engine, check the water level. If the water level has decreased, add coolant by following steps (3) through (7). Repeat it until the water level no longer lowers and bleed air in the radiator and engine.

**⚠ CAUTION**
**Entry of air causes overheat and coolant leakage from the coolant pump.**

**NOTICE**
**Check that hot air flows out from the foot duct during engine racing.**

(8) Add the coolant into the reserve tank to FULL, and tighten the cap.

**5. AIR BLEEDING OF FUEL SYSTEM**
**Reference: FUEL SYSTEM (J08E), PRE FUEL FILTER , AIR BLEEDING**
**(Page EN07-31)**

# EXHAUST CONTROL CYLINDER

## SYSTEM CONFIGURATION

EN01Z0804D100007

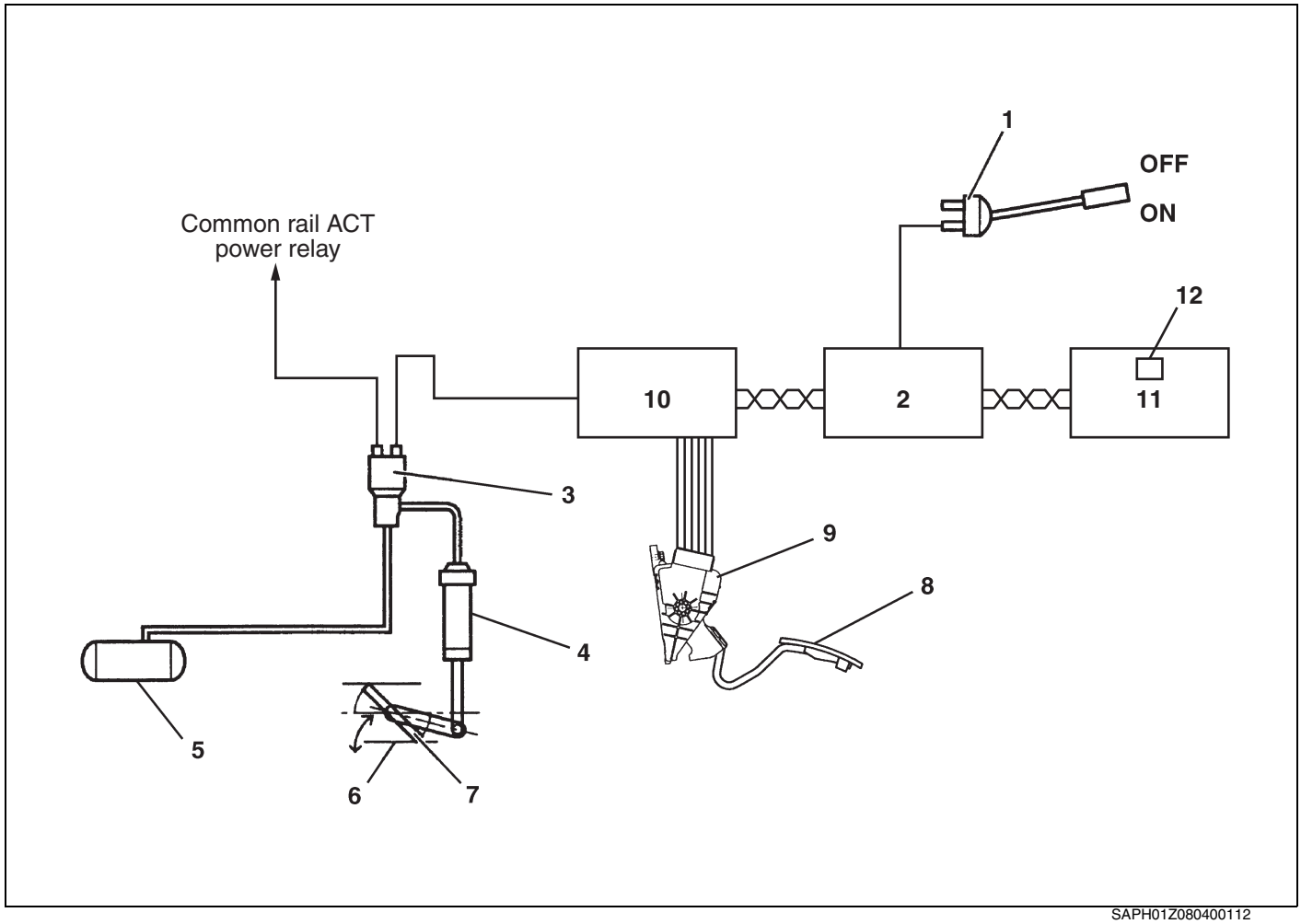


SAPH01Z080400112

| | | | |
|---|---|---|---|
| 1 | Exhaust brake switch | 7 | Butterfly valve |
| 2 | Vehicle control unit | 8 | Accelerator pedal |
| 3 | Solenoid valve | 9 | Accelerator sensor |
| 4 | Exhaust control cylinder (Exhaust brake) | 10 | Engine ECU |
| 5 | Air tank | 11 | Combination meter ECU |
| 6 | Exhaust pipe | 12 | Exhaust brake light |

# DPR INSPECTION CHECK SHEET

EN01Z0804D100008

**HINT**
**After the inspection, enter check marks into the empty check boxes.**

| Step | 1 | | 2 | | 3 | | 4 | |
|---|---|---|---|---|---|---|---|---|
| Inspection part | Fuel tank, Filter | | Air intake system parts | | Engine ECM | | VNT turbocharger | |
| Inspection items | ☐ Dirty or clogged fuel filter element<br>☐ Entry of foreign matter or water into the fuel tank<br>☐ Use of bad fuel | | ☐ Air filter element dirty, clogged, etc.<br>☐ Damage to air cleaner body or air intake stack<br>☐ Damaged or bent air hose<br>☐ Damaged inter cooler body or hose | | ☐ Most recent program No.? | | ☐ Following characteristic at the time of inspection (Error within ± 5%) | |
| | YES | NO | YES | NO | YES | NO | YES | NO |
| Handling in case of "NO" judgment | • Element replacement<br>• Fuel sampling → Investigation<br>*Sampling from the fuel tank | | • Element replacement<br>• Inspection of body and air intake stack<br>• Replacement of intercooler body or hose | | • Updating to the most recent software version (**). | | • Replacement in case of bad following | |

**(**)As long as the injection quantity is normal at the time of exhaust control valve is operating, there is no problem.**

EN01Z0804D100009

**HINT**
**After the inspection, enter check marks into the empty check boxes.**

| 5 | | 6 | | 7 | | 8 | |
|---|---|---|---|---|---|---|---|
| EGR valve | | Supply pump, Injector | | Fuel injection quantity | | Manual regeneration | |
| ☐ Following characteristic at the time of inspection (Error within ± 5%) | | ☐ Stability of the pump electrical current value<br>*Standard = Refer to the supply pump inspection.<br>☐ Injector correction value<br>*Guide value = "Correction value for the correction injection quantity between cylinders" at the time of idle speed within ± 5 $mm^3$/st | | ☐ Injection quantity<br>1. At the time of idle<br>2. At the time of exhaust control valve is in operation<br>☐ Exhaust control valve operation (No clinging or air leakage etc.?)<br>*At the time of exhaust control valve opening adjustment, refer to the standard value table shown blow left.<br>*Confirm the injection quantity at the time of exhaust control valve is operating when the exhaust temperature has stabilized. | | *To be performed with all auxiliary equipment load off.<br>☐ Gas leakage at the time of regeneration<br>☐ Discharge of white or black smoke at the time of regeneration<br>☐ Exhaust gas temperature at the time of regeneration<br>*Peak temperature: 500 °C or more (guide value)<br>☐ Regeneration time<br>*Guide value: Approximately 20 min | |
| YES | NO | YES | NO | YES | NO | YES | NO |
| • Replacement in case of bad following | | • Supply pump replacement when the inspection result is NG<br>• Injector replacement when the injector correction value is not within ± 5 $mm^3$/st | | Repair or replacement the exhaust control valve in case of problems with exhaust control valve operation. (***) | | White smoke means excessively closed exhaust control valve → Readjustment. Black smoke requires DPR filter confirmation. → Replace if the rear part is black.<br>• If the temperature rise is bad although injector, VNT, and EGR all are OK, inspect the temperature sensor and the front of the DPR. → Clean if the front is clogged. | |

**(***) Caution items before inspection of the fuel injection quantity**

1. Connect the HINO DX II and perform warm-up until the engine temperature becomes 82°C {180°F} or higher.
2. Set the gear to neutral and pull the parking brake lever sufficiently.
3. Switch off the air conditioner and the headlights.
4. Confirm that charging of the air compressor has been completed.
5. Switch off all other auxiliary equipment loads. (Refrigeration compressor, PTO, etc.)

## Injection quantity and engine speed standard value table (value with all auxiliary equipment loads off)

| | | |
|---|---|---|
| **Idling (normal)** | **Speed (r/min)** | **750** |
| | **Injection quantity (q)** | **7 - 16** |
| **At the time of manual regeneration (guide value)** | **Speed (r/min)** | **980** |
| **Backpressure standard** | **Speed (r/min)** | **2,800** |
| | **Backpressure (kPa {kgf/cm$^2$, lbf/in.$^2$}** | **5.0 {0.05, 0.7}** |

# EXHAUST GAS TEMPERATURE SENSOR 1 (ATC UPSTREAM) AND EXHAUST GAS TEMPERATURE SENSOR 2 (ATC DOWNSTREAM)

## COMPONENT LOCATOR

EN01Z0804D100010

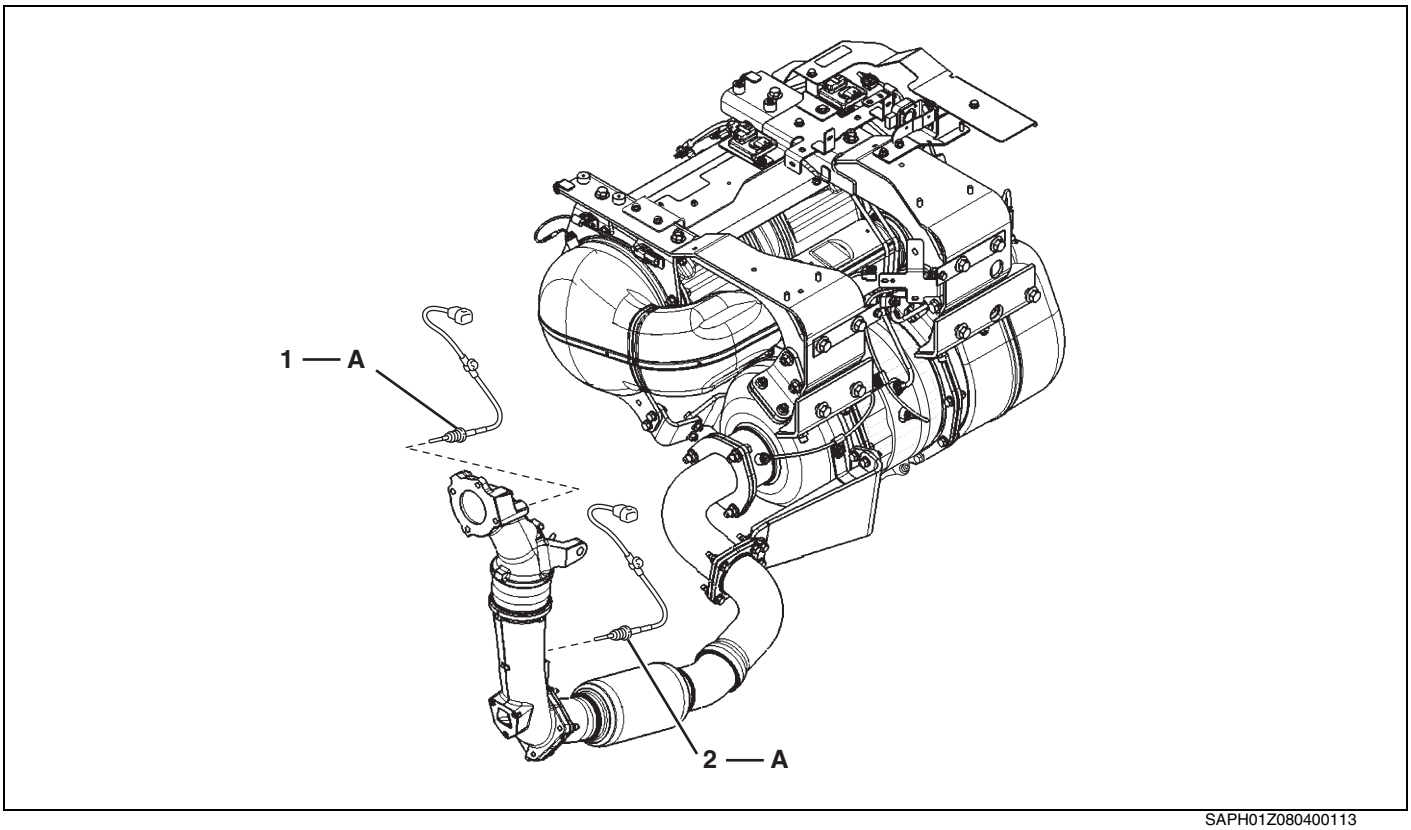


SAPH01Z080400113

| | | | |
|---|---|---|---|
| 1 | Exhaust gas temperature sensor 1 (ATC upstream) | 2 | Exhaust gas temperature sensor 2 (ATC downstream) |

**Tightening torque** **Unit: N·m {kgf·cm, lbf·ft}**

| | | | |
|---|---|---|---|
| A | 25-35 {255-357, 18.4-25.8} | | |

# OVERHAUL

EN01Z0804H100007

## IMPORTANT POINTS DISMOUNTING

**1. DISCONNECTING THE HARNESS**

(1) Disconnect a connector from the exhaust gas temperature sensor 1 (ATC upstream) and exhaust gas temperature sensor 2 (ATC downstream).

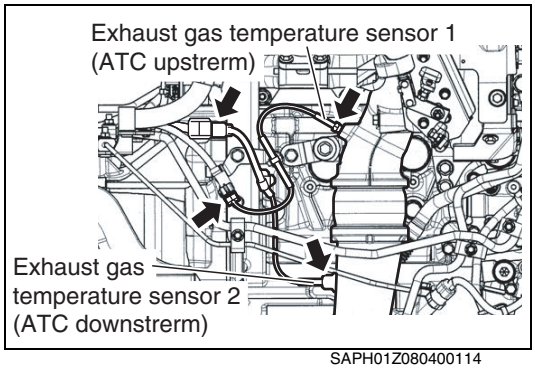


SAPH01Z080400114

**2. REMOVING THE EXHAUST GAS TEMPERATURE SENSOR 1 (ATC UPSTREAM) AND EXHAUST GAS TEMPERATURE SENSOR 2 (ATC DOWNSTREAM)**

(1) Remove the exhaust gas temperature sensor 1 (ATC upstream) and exhaust gas temperature sensor 2 (ATC downstream) together with harness clamps from the exhaust pipe No.1 (ATC).

## SINGLE UNIT INSPECTION

**1. INSPECTING THE RESISTANCE**

(1) Use water and a circuit tester to measure resistance between terminals. Replace if a measurement reading exceeds the standard value.

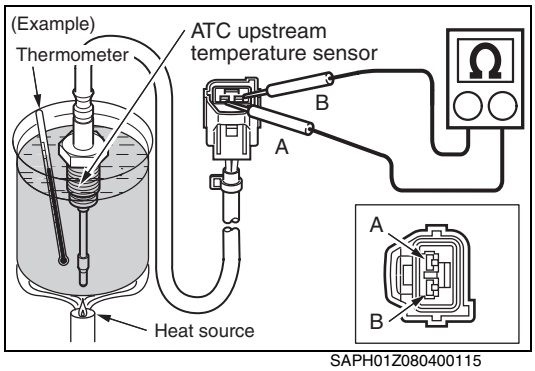


SAPH01Z080400115

| Temperature | Standard value |
|---|---|
| 20°C {68°F} | 13.7-29.8kΩ |
| 50°C {122°F} | 7.13-13.7kΩ |
| 80°C {176°F} | 4.1-7.13kΩ |

## MOUNTING THE ATC UPSTREAM TEMPERATURE SENSOR

**1. INSULATION RESISTANCE TEST**

(1) Using the 500 V megohmmeter, measure the insulation resistance between the aftertreatment fuel injector upper body and connector (part side). Replace if the measurement reading exceeds the standard value.

| Standard value (Room temperature) | 10MΩ or more (Using the 500 V megohmmeter) |
|---|---|

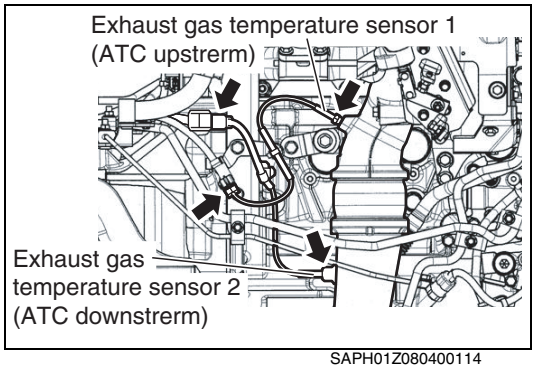


SAPH01Z080400114

**⚠ CAUTION**

**Never measure between the terminals, or the aftertreatment fuel injector will be damaged.**

# LUBRICATING SYSTEM (J08E)

EN05-001

**LUBRICATING SYSTEM ..... EN05-2**
DIAGRAM ..... EN05-2

**OIL PUMP AND OIL STRAINER ..... EN05-4**
COMPONENT LOCATOR..... EN05-4
OVERHAUL ..... EN05-5
INSPECTION AND REPAIR ..... EN05-6

**OIL FILTER AND OIL COOLER ..... EN05-8**
COMPONENT LOCATOR..... EN05-8
SPECIAL TOOL ..... EN05-9
DISMOUNTING AND MOUNTING ..... EN05-10
INSPECTION AND REPAIR ..... EN05-11

# LUBRICATING SYSTEM

## DIAGRAM

EN0110605J100001

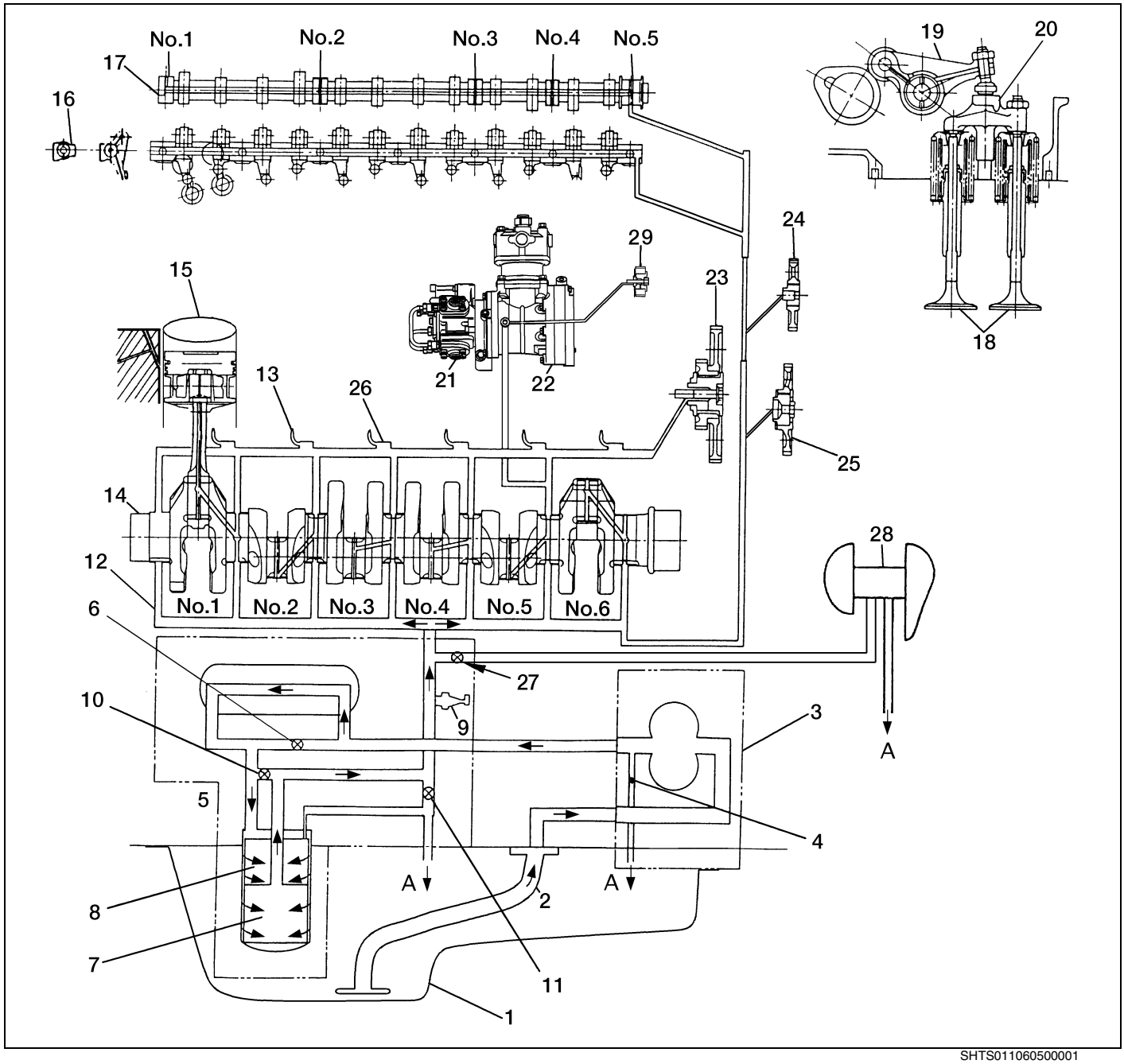


SHTS011060500001

**Unit: kPa {kgf/cm$^2$, lbf/in.$^2$}**

| | | | |
|---|---|---|---|
| 1 | Oil pan | 15 | Piston |
| 2 | Oil strainer | 16 | Rocker arm shaft |
| 3 | Oil pump | 17 | Camshaft |
| 4 | Oil pump safety valve<br>1,648-1,746 {16.8-17.8, 239-253} | 18 | Valve |
| | | 19 | Rocker arm |
| 5 | Oil cooler and oil filter | 20 | Cross head |
| 6 | Oil cooler safety valve<br>352-432 {3.6-4.4, 52-62} | 21 | Supply pump |
| | | 22 | Air compressor |
| 7 | Oil filter (full flow) | 23 | Main idle gear |
| 8 | Oil filter (by-pass) | 24 | Cam idle gear |
| 9 | Pressure switch | 25 | Sub idle gear |
| 10 | Oil filter safety valve<br>137-157 {1.3-1.6, 20-23} | 26 | Check valve<br>147-205 {1.5-2.0, 21-29} |
| | | | |
| 11 | Regulator valve<br>490-570 {5.0-5.8, 72-82} | 27 | Check valve for turbocharger |
| | | 28 | Turbocharger |
| 12 | Main oil hole | 29 | Idle gear |
| 13 | Piston cooling jet | A | To oil pan |
| 14 | Crankshaft | | |

# OIL PUMP AND OIL STRAINER

## COMPONENT LOCATOR

EN0110605D100001

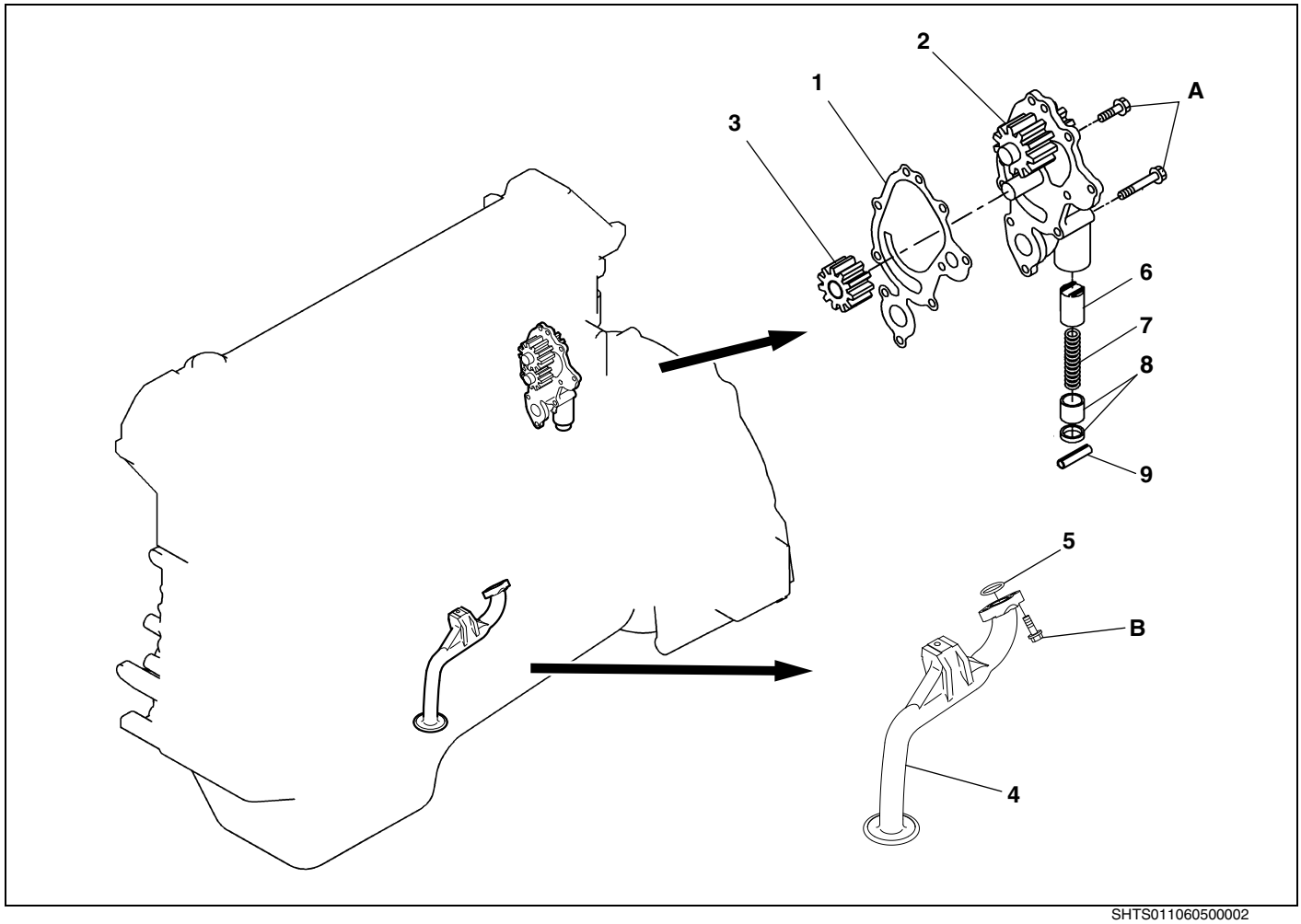


SHTS011060500002

| | | | |
|---|---|---|---|
| 1 | Gasket | 6 | Safety valve |
| 2 | Oil pump | 7 | Relief spring |
| 3 | Driven gear | 8 | Spring seat |
| 4 | Oil strainer | 9 | Cotter pin |
| 5 | O-ring | | |

**Tightening torque** **Unit: N·m {kgf·cm, lbf·ft}**

| | | | |
|---|---|---|---|
| A | 28.5 {291, 21} | B | 30 {306, 22} |

# OVERHAUL

EN0110605H200001

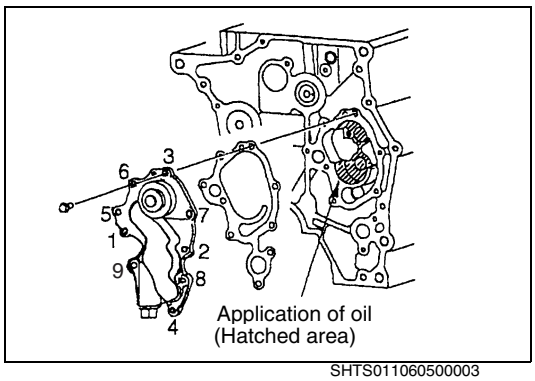


SHTS011060500003

## IMPORTANT POINTS - ASSEMBLY

**1. INSTALLING THE OIL PUMP.**

(1) Apply oil to the pump case and bearings of the block (hatched area) before installing the oil pump.

**NOTICE**

**Not applying oil may cause oil suction failure at start-up, resulting in seizure and abnormality.**

(2) To prevent misalignment of the gasket, apply grease to the gasket matching face of the block. Then, place and fix the gasket.

**NOTICE**

**If you change with the gasket misaligned, the seal will be defective and cause all the oil in the oil pump to flow out when the engine is stopped. The defective seal may also result in an insufficient oil suction quantity in the initial rotation when restarting the engine and cause seizure or abnormal wear.**

(3) Tighten the oil pump mounting bolts provisionally in the order as shown in the figure. Tighten them to the specified torque.

**NOTICE**

- **Note that failure to observe the tightening order may result in damage to the oil pump.**
- **After tightening, check that the gear can be turned easily by hand.**

# INSPECTION AND REPAIR

EN0110605H300001

Unit: mm {in.}

| Inspection item | | Standard | Limit | Remedy | Inspection procedure |
|---|---|---|---|---|---|
| Gear outside diameter | | 54 {2.126} | — | — | Measure 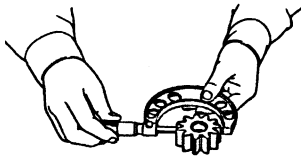 |
| Block side pump body inside diameter | | 54 {2.126} | — | — | |
| Tip clearance | | 0.093-0.252 {0.0037-0.0099} | 0.30 {0.0118} | Replace oil pump. | |
| Gear width | | 43 {1.693} | — | — | Measure 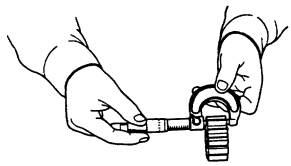 |
| Block side pump body inside depth | | 43 {1.693} | — | — | |
| End play | With gasket | 0.047-0.150 {0.0019-0.0059} | 0.15 {0.0059} | Replace oil pump. | |
| | Without gasket | -0.013-0.050 {-0.0005-0.0020} | — | — | |
| Drive gear | Shaft outside diameter | 18 {0.709} | — | — | Measure 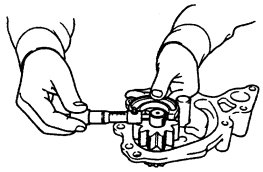 |
| | Block side bushing inside diameter | 18 {0.709} | — | — | |
| | Clearance | 0.040-0.099 {0.0016-0.0039} | — | Replace oil pump. | 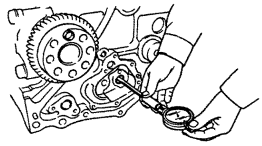 |
| Driven gear | Shaft outside diameter | 18 {0.709} | — | — | Measure 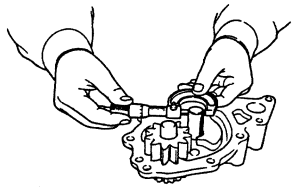 |
| | Block hole diameter | 18 {0.709} | — | — | |
| | Clearance | 0.030-0.075 {0.0012-0.0030} | — | Replace oil pump. | |
| | Gear bushing inside diameter | 18 {0.709} | — | — | 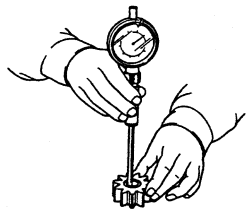 |
| | Clearance | 0.040-0.083 {0.0016-0.0033} | 0.15 {0.0059} | Replace driven gear or oil pump. | |

| Inspection item | Standard | Limit | Remedy | Inspection procedure |
|---|---|---|---|---|
| **Gear backlash** | **0.073-0.207 {0.0029-0.0082}** | **0.30 {0.0118}** | **Replace pump.** | **Measure** 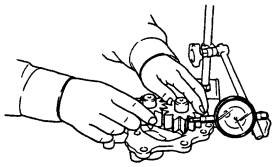 |

# OIL FILTER AND OIL COOLER

## COMPONENT LOCATOR

EN0110605D100002

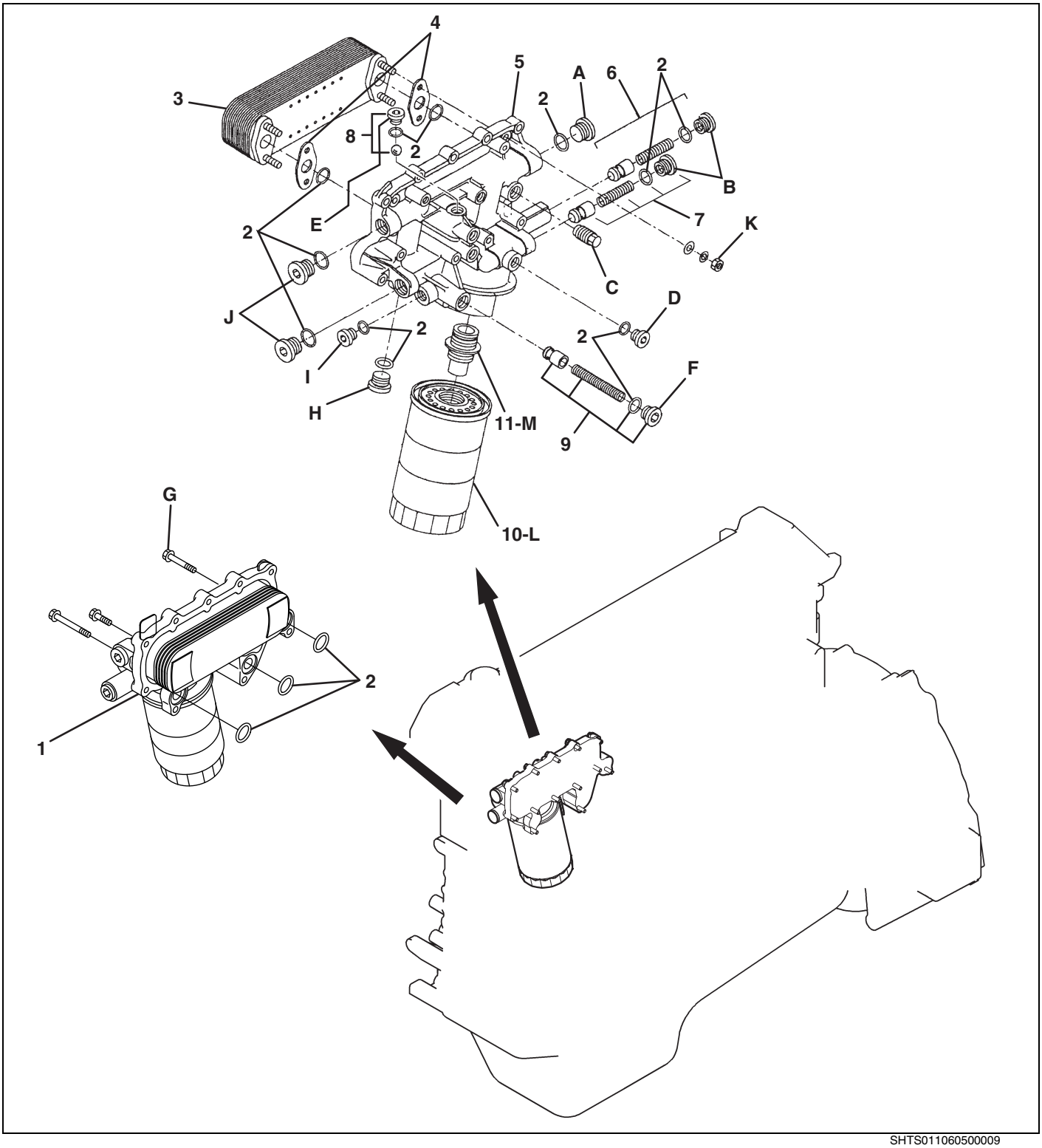


SHTS011060500009

| | | | |
|---|---|---|---|
| 1 | Oil cooler with filter assembly | 7 | Oil filter safety valve |
| 2 | O-ring | 8 | Check valve |
| 3 | Oil cooler element | 9 | Oil cooler safety valve |
| 4 | Gasket | 10 | Oil filter element |
| 5 | Oil cooler case | 11 | Insert |
| 6 | Regulator valve | | |

**Tightening torque** **Unit: N·m {kgf·cm, lbf·ft}**

| | | | |
|---|---|---|---|
| A | 29.4-39.2 {300-400, 22-28} | H | 29.4-39.2 {300-400, 22-28} |
| B | 24.5-34.3 {250-350, 19-25} | I | 19.6-29.4 {200-300, 15-21} |
| C | 39.2-49 {400-500, 29-36} | J | 29.4-39.2 {300-400, 22-28} |
| D | 19.6-29.4 {200-300, 15-21} | K | 19.6-29.4 {200-300, 15-21} |
| E | 19.6-29.4 {200-300, 15-21} | L | 39.2-49 {400-500, 29-36} |
| F | 24.5-34.3 {250-350, 19-25} | M | 98.1-117.7 {1,000-1,200, 72-87} |
| G | 28.5 {291, 21} | | |

# SPECIAL TOOL

EN0110605K100001

Prior to starting an engine overhaul, it is necessary to have this special tool.

| Illustration | Part number | Tool name | Remarks |
|---|---|---|---|
| 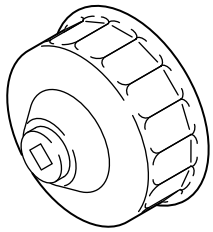 | S0950-31110 | OIL FILTER WRENCH | |

# DISMOUNTING AND MOUNTING

EN0110605H200002

## REPLACE ENGINE OIL FILTER

**⚠ WARNING**
**To avoid burns or serious injury, wait until the engine oil is completely cooled down before starting to replace the filter. Engine oil could be still very hot immediately after driving. To reduce risk of fire, be sure to follow the instructions below.**

- **To avoid damaging the oil filter during installation, never twist the filter gasket.**
- **Always use a new oil filter element during filter replacement.**
- **Wipe off any oil spilled on vehicle components.**
- **Never drive the vehicle with the filler cap and/or level gauge removed.**

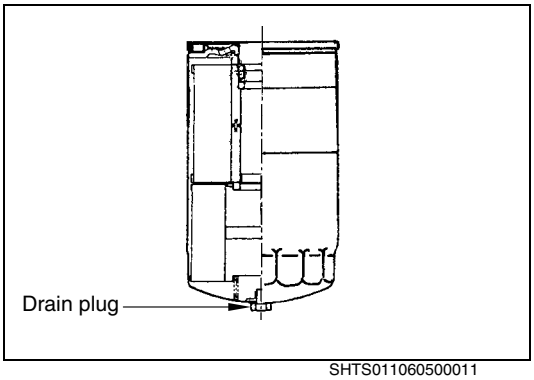

SHTS011060500011

## IMPORTANT POINTS - DISMOUNTING

**1. REMOVE THE OIL FILTER.**
(1) Remove the drain plug from bottom of the oil filter and drain the engine oil.

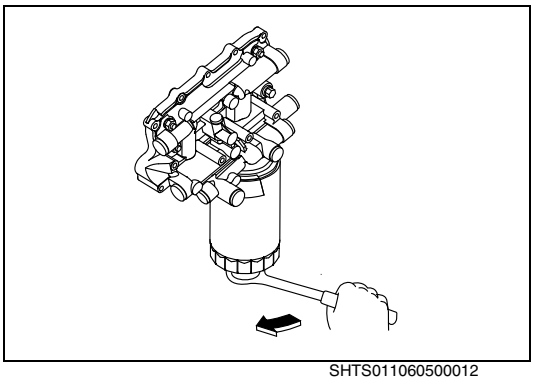
SHTS011060500012

(2) Using the special tool, remove the oil filter.
**SST: Oil filter wrench (S0950-31110)**

**NOTICE**
**Make sure that O-rings are not on the oil cooler case side.**

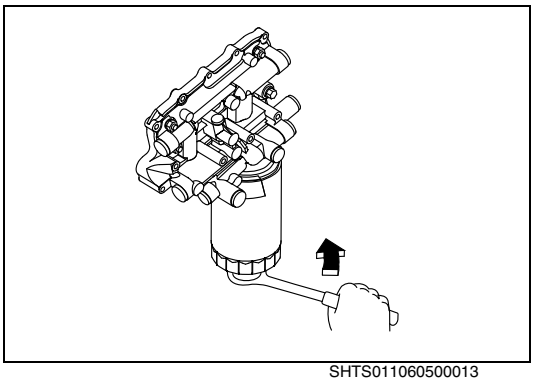
SHTS011060500013

## IMPORTANT POINT - MOUNTING

**1. INSTALL THE OIL FILTER.**
(1) Remove the dust on installation surface of oil cooler case side.
(2) Apply the engine oil to the O-ring on new oil filter.
(3) Install the oil filter by turning it lightly to the right by hand until it comes in contact with the surface of the oil cooler. Then using the special tool, tighten the oil filter about 270°-360° (3/4-1 turn).
**SST: Oil filter wrench (S0950-31110)**

**NOTICE**

- **Do not reuse the O-ring.**
- **Attention to damage of O-ring to damage.**

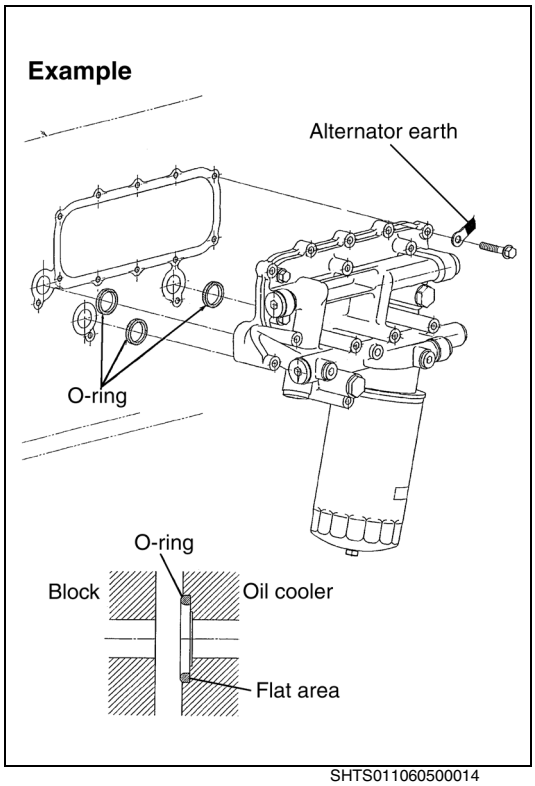

SHTS011060500014

**2. INSTALL THE OIL COOLER AND OIL FILTER ASSEMBLY.**

(1) Insert the O-ring into the O-ring groove of the oil cooler.

**NOTICE**

**Face the flat area of the O-ring toward the oil cooler for installation.**

(2) Apply liquid gasket to the oil cooler case and install it onto the cylinder block, then tighten the bolt to the specified torque.

**Tightening Torque:**
**28.5 N·m {291 kgf·cm, 21 lbf·ft}**

# INSPECTION AND REPAIR

EN0110605H300002

| Inspection item | Standard | Limit | Remedy | Inspection procedure |
|---|---|---|---|---|
| **Oil cooler air leakage Air pressure: 588 kPa {6 kgf/cm$^2$, 85 lbf/in.$^2$}** | **0 mL** | **—** | **Replace, if necessary.** | **Visual check** |
| **Wear or damage to valve spring of oil cooler and oil filter** | **—** | **—** | **Replace, if necessary.** | **1. Damage to sliding face of valve<br>2. Valve movement (smoothness)** |

# COOLING SYSTEM (J08E)

EN06-001

**COOLING SYSTEM ..... EN06-2**
DIAGRAM ..... EN06-2

**COOLANT PUMP..... EN06-3**
COMPONENT LOCATOR..... EN06-3

**THERMOSTAT ..... EN06-4**
COMPONENT LOCATOR..... EN06-4
OVERHAUL ..... EN06-5

**RADIATOR AND INTERCOOLER ..... EN06-7**
COMPONENT LOCATOR..... EN06-7
OVERHAUL ..... EN06-7

**RADIATOR ..... EN06-9**
COMPONENT LOCATOR..... EN06-9
SPECIAL TOOL ..... EN06-10
OVERHAUL ..... EN06-10
INSPECTION AND REPAIR ..... EN06-14

**COOLING FAN..... EN06-15**
COMPONENT LOCATOR..... EN06-15
INSPECTION AND REPAIR ..... EN06-16

# COOLING SYSTEM

## DIAGRAM

EN01Z0806J100001

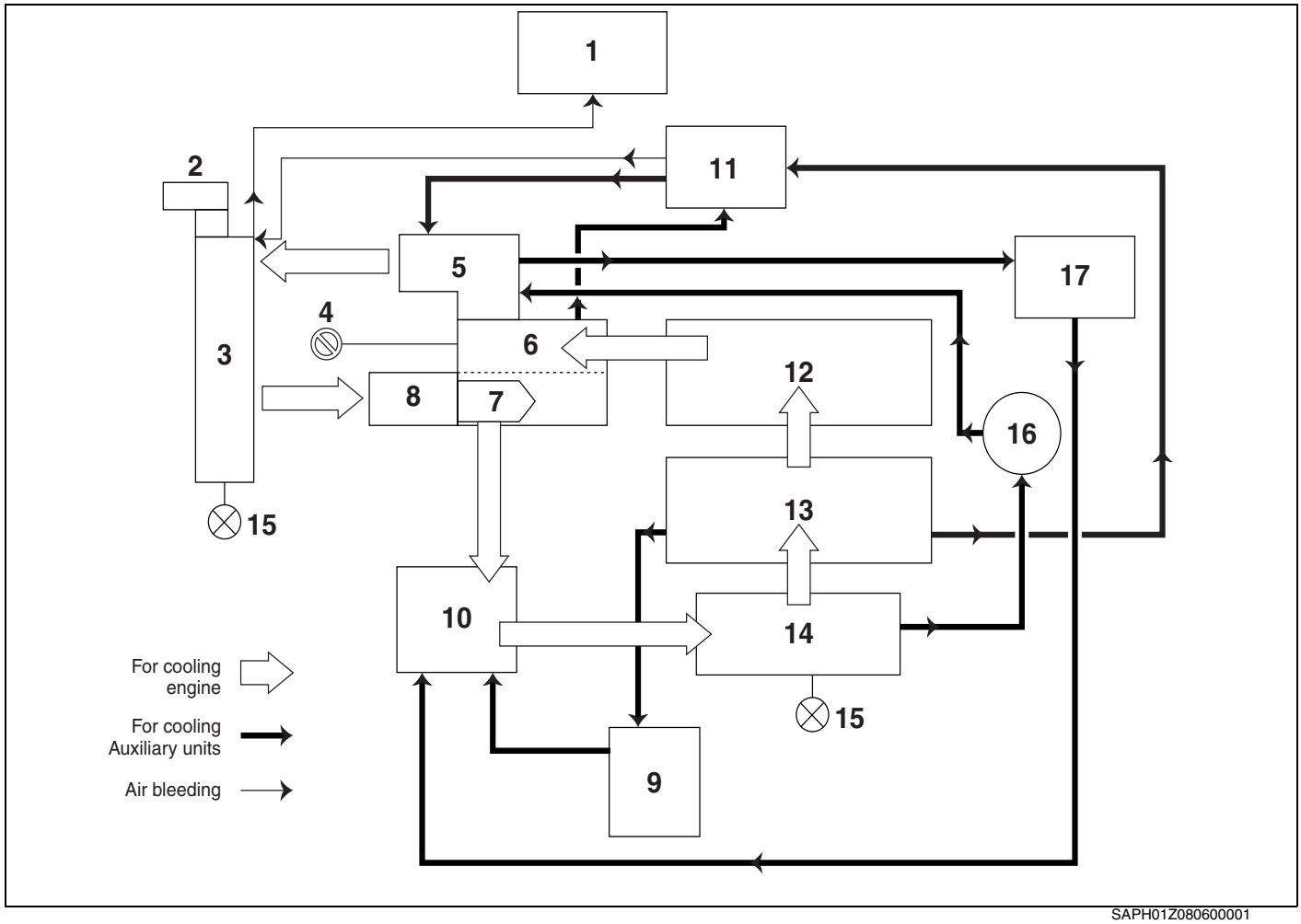


SAPH01Z080600001

| | | | |
|---|---|---|---|
| 1 | Reservoir tank | 10 | Coolant pump |
| 2 | Radiator cap | 11 | EGR cooler |
| 3 | Radiator | 12 | Cylinder head |
| 4 | Coolant temperature gauge | 13 | Cylinder block |
| 5 | Thermostat case cover (Outlet) | 14 | Oil cooler |
| 6 | Thermostat case | 15 | Drain plug |
| 7 | Thermostat | 16 | Turbocharger |
| 8 | Thermostat case cover (Inlet) | 17 | Car heater |
| 9 | Air compressor | | |

# COOLANT PUMP

## COMPONENT LOCATOR

EN01Z0806D100001

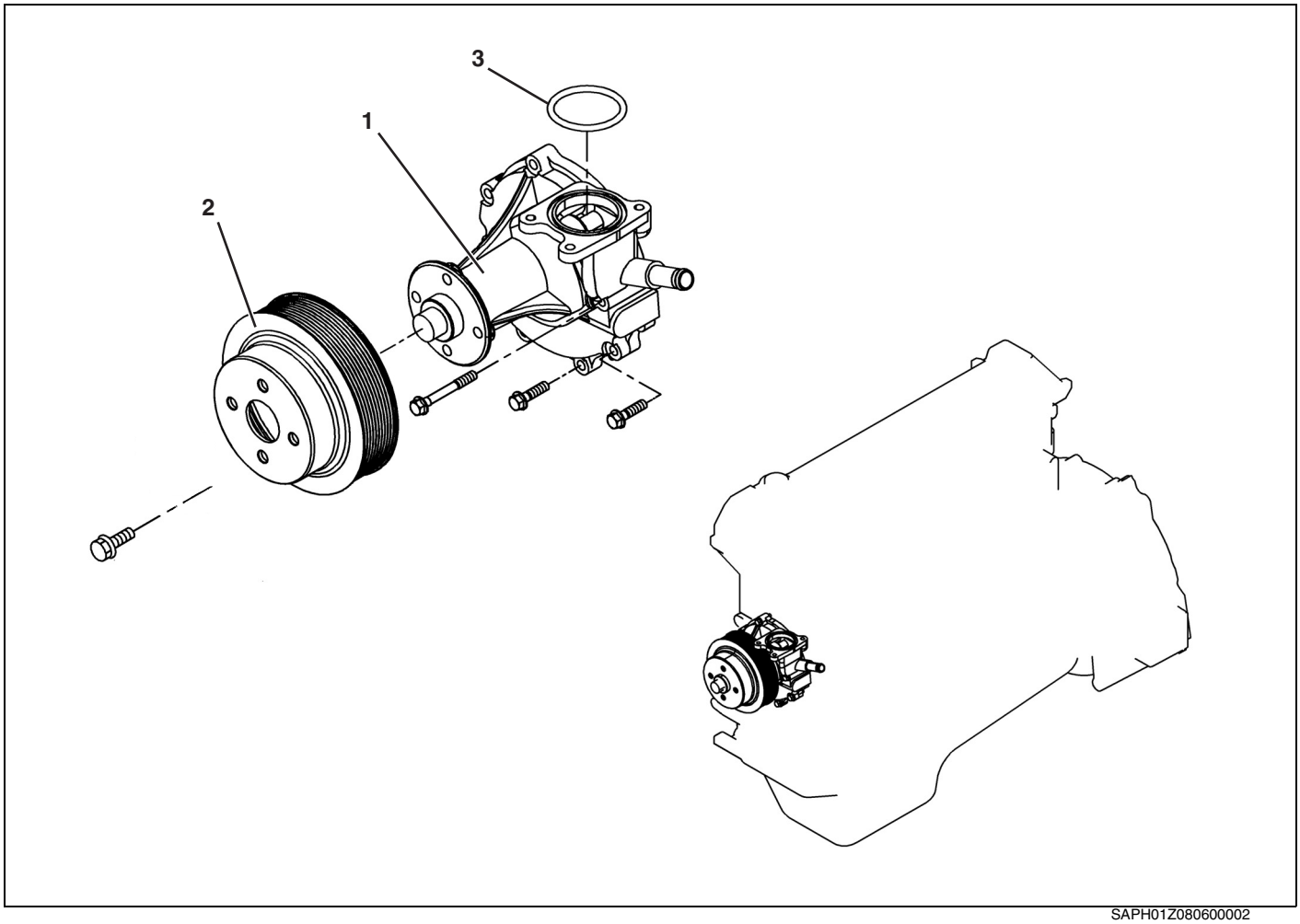


SAPH01Z080600002

| | | | |
|---|---|---|---|
| 1 | Coolant pump assembly | 3 | O-ring |
| 2 | Pulley | | |

# THERMOSTAT

## COMPONENT LOCATOR

EN01Z0806D100002

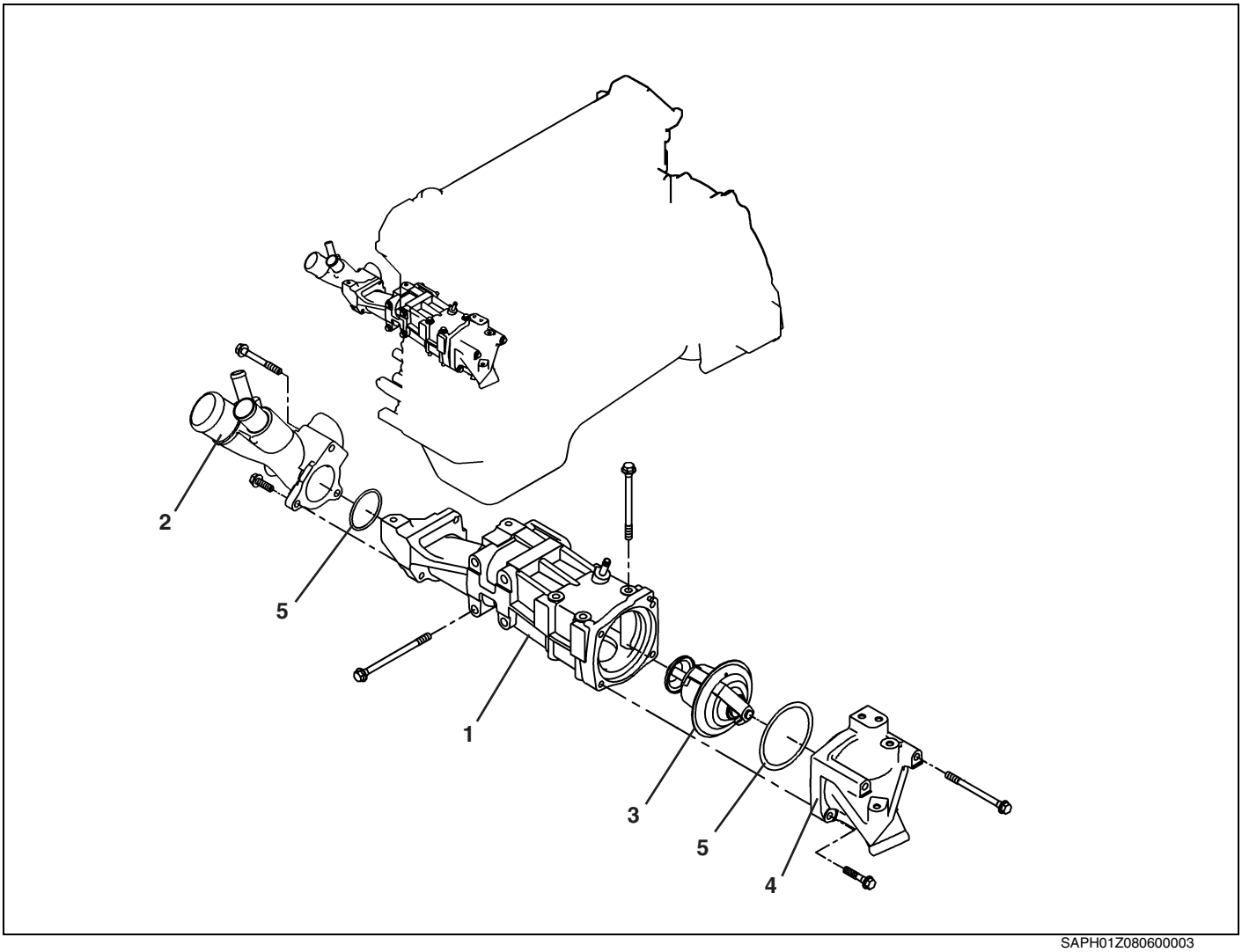


SAPH01Z080600003

| | | | |
|---|---|---|---|
| 1 | Thermostat case | 4 | Water inlet |
| 2 | Water outlet | 5 | O-ring |
| 3 | Thermostat | | |

# OVERHAUL

EN01Z0806H200001

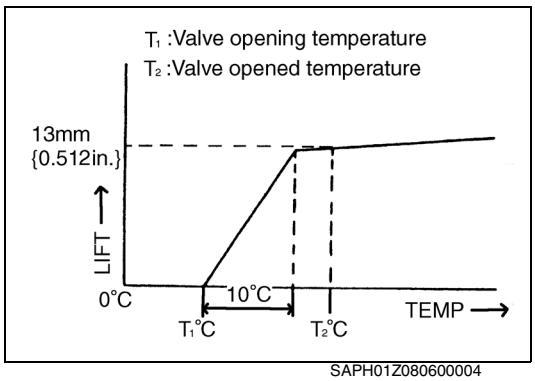


SAPH01Z080600004

## IMPORTANT POINTS - INSPECTION AND REPAIR

**1. INSPECT THE THERMOSTAT FUNCTION.**

(1) Place the thermostat in hot water and check the valve opening temperature and the valve lift.

**Thermostat valve opening temperature:**

| Thermostat valve opening temperature. ($T_1$) | Service standard |
|---|---|
| 82°C {180°F} | 80-84°C {176-183°F} |

**NOTICE**

**Check that the thermostat valve opening temperature ($T_1$) is engraved on the thermostat seat.**

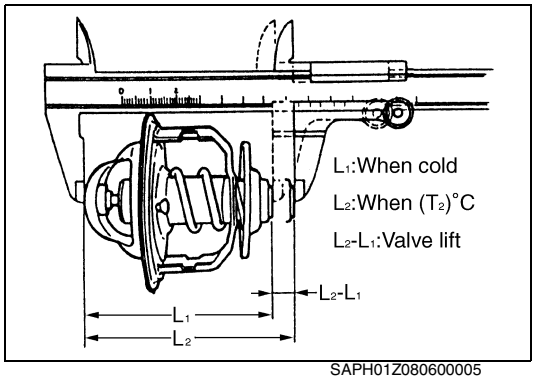


SAPH01Z080600005

**Thermostat valve lift:**

| Thermostat valve opening temp. ($T_1$) | Measuring temp. ($T_2$) | Valve lift ($L_2$-$L_1$) |
|---|---|---|
| 82°C {180°F} | 95°C {203°F} | 13 mm {0.512 in.} or more |

(2) Immerse the opened thermostat in water at normal temperature. If it completely closes within 5 minutes, it is satisfactory. If it remains slightly open, it is defective and must be replaced.

## IMPORTANT POINTS - ASSEMBLY

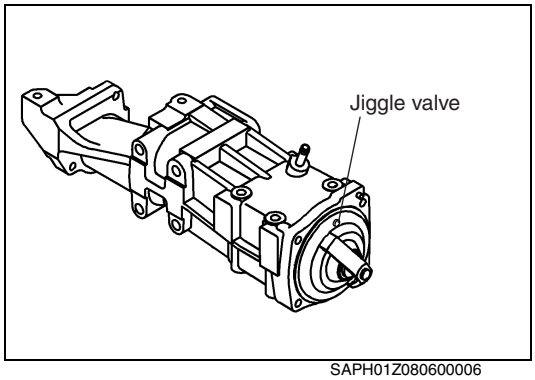


SAPH01Z080600006

**1. ASSEMBLE THE THERMOSTAT CASE.**

**NOTICE**

- **Remove water or dirt adhering to the thermostat case.**
- **Be sure to replace the gasket if it is corroded, damaged or flattened.**
- **Before installing the hose, apply liquid gasket to the hose installation part of the thermostat case cover.**
- **To prevent clogging of the radiator, do not use a large amount of liquid gasket.**
- **Be sure that the jiggle valve faces upward when installing it.**

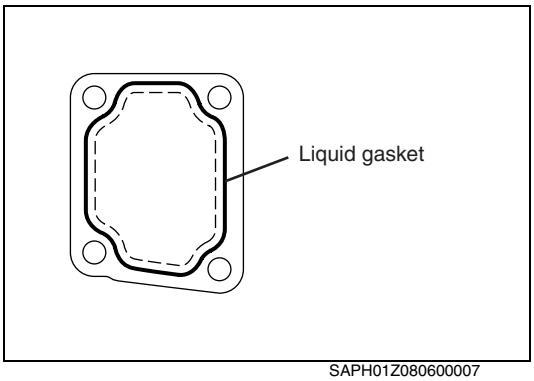

SAPH01Z080600007

## IMPORTANT POINTS - MOUNTING

**1. INSTALL THE THERMOSTAT CASE ASSEMBLY.**

(1) Apply liquid gasket to the thermostat case.

(2) Install the o-ring into the groove of the coolant pump.

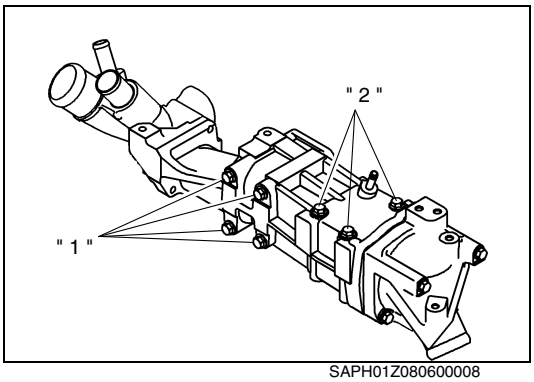

SAPH01Z080600008

(3) Temporarily tighten the bolts "1" and bolts "2" in that order, and securely contact the fitting surface.

(4) Tighten the bolts in numeral order.

# RADIATOR AND INTERCOOLER

## COMPONENT LOCATOR

EN01Z0806D100003

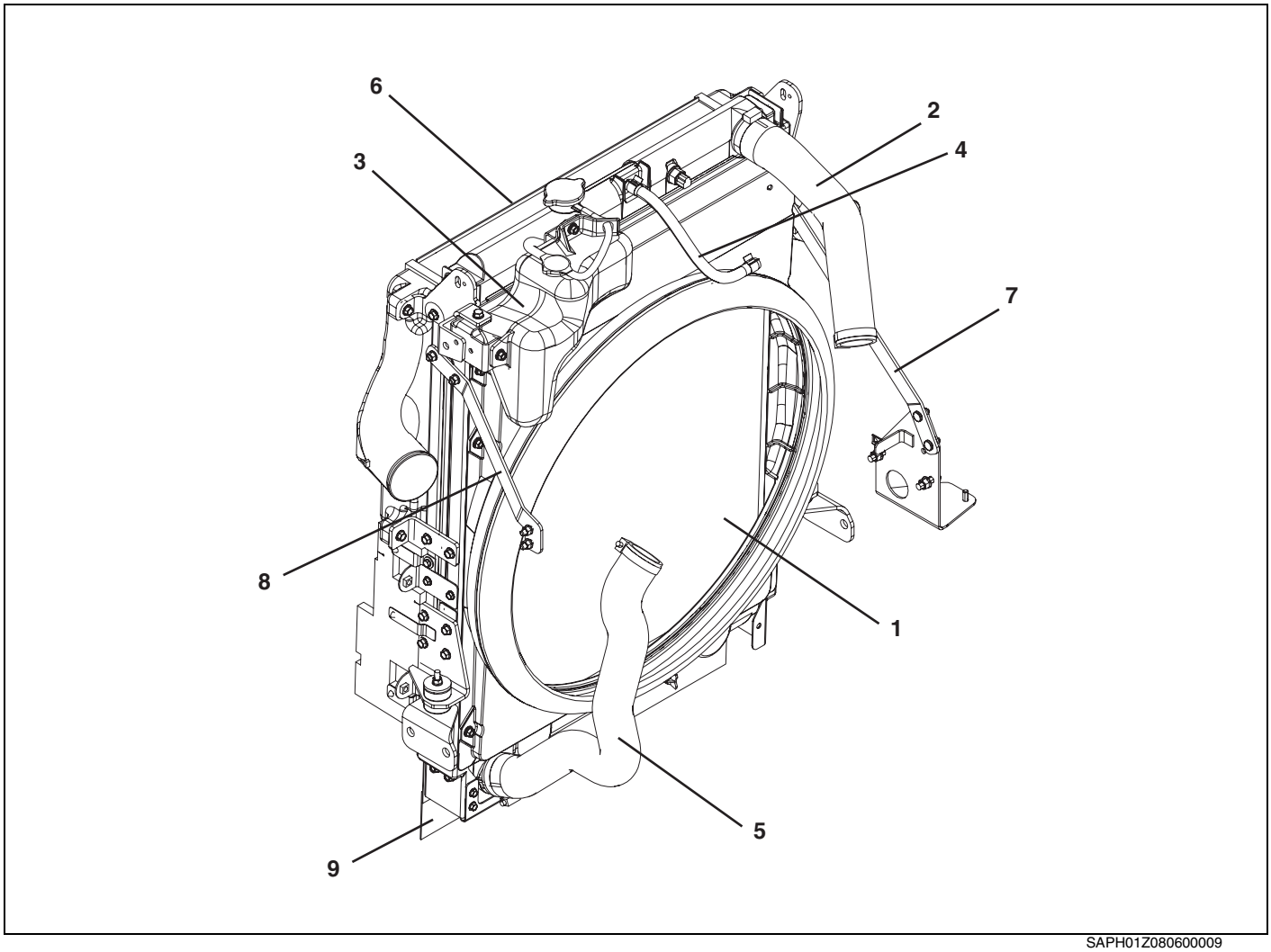


SAPH01Z080600009

| | | | |
|---|---|---|---|
| 1 | Radiator | 6 | Inter cooler |
| 2 | Inlet hose | 7 | Radiator stay, RH |
| 3 | Reservoir tank | 8 | Radiator stay, LH |
| 4 | Hose | 9 | Baffle plate |
| 5 | Outlet hose | | |

## OVERHAUL

EN01Z0806H200002

### IMPORTANT POINTS - DISMOUNTING

**1. DISMOUNT THE RADIATOR.**

**⚠ WARNING**
**Do not drain the coolant while the engine and radiator are still hot to avoid burns and scalds.**

**NOTICE**
**When dismounting and mounting the radiator, do not damage the radiator core.**

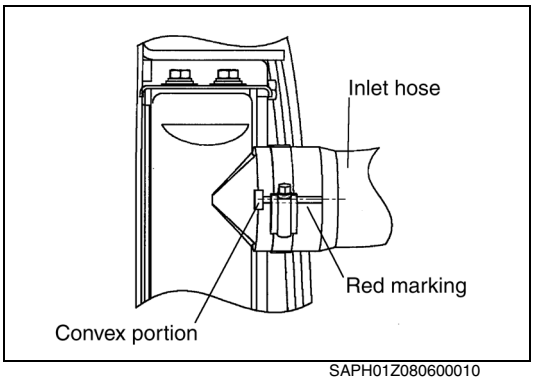

SAPH01Z080600010

## IMPORTANT POINTS - MOUNTING

**1. INSTALL THE RADIATOR INLET HOSE.**

**NOTICE**

- **Install the radiator hose against the convex portion of the radiator.**
- **Match the red mark of the radiator hose and match mark (convex portion) of the radiator.**

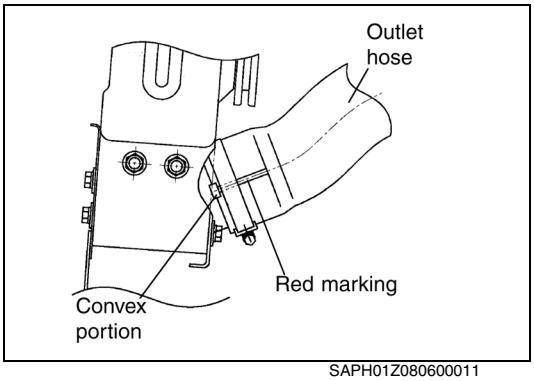

SAPH01Z080600011

**2. INSTALL THE RADIATOR OUTLET HOSE.**

**NOTICE**

- **Install the radiator hose against the convex portion of the radiator.**
- **Match the red mark of the radiator hose and match mark (convex portion) of the radiator.**

# RADIATOR

## COMPONENT LOCATOR

EN01Z0806D100004

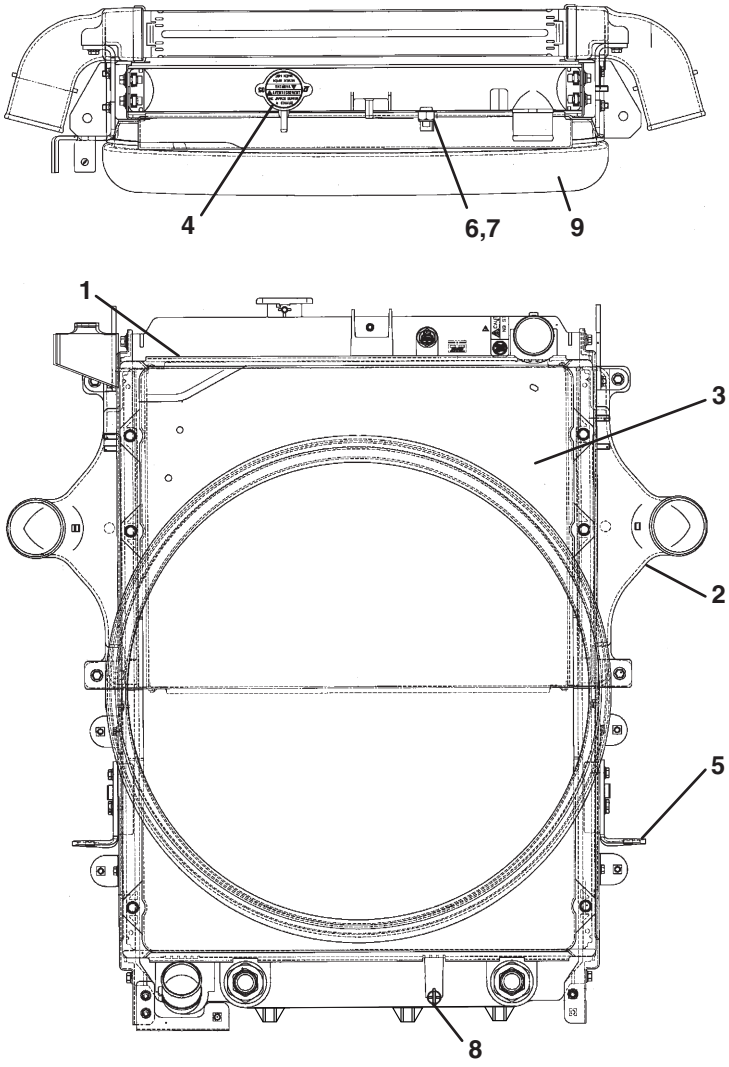


SAPH01Z080600012

| | | | |
|---|---|---|---|
| 1 | Radiator assy | 6 | Sensor |
| 2 | Intercooler assy | 7 | Packing |
| 3 | Fan shroud | 8 | Drain plug |
| 4 | Radiator cap | 9 | Seal |
| 5 | Bracket | | |

# SPECIAL TOOL

EN01Z0806K100001

Prior to starting an engine overhaul, it is necessary to have these special tools.

| Illustration | Part number | Tool name | Remarks |
|---|---|---|---|
| 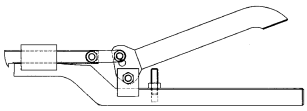 | S0976-01030 | RADIATOR TOOL | TOOL FOR UNCAULKING |
| 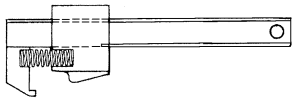 | S0976-01040 | RADIATOR TOOL | TOOL FOR CAULKING (USED WITH S0976-01030) |

# OVERHAUL

EN01Z0806H200003

## IMPORTANT POINTS - DISMOUNTING

**1. DISMOUNT THE RADIATOR.**

**⚠ WARNING**
**Do not drain the coolant while the engine and radiator are still hot to avoid burns and scalds.**

**NOTICE**
**When dismounting and mounting the radiator, do not damage the radiator core.**

## IMPORTANT POINTS - DISASSEMBLY

**NOTICE**
**Re caulking should be limited to twice.**

**1. DISASSEMBLE THE UPPER TANK, LOWER TANK AND RADIATOR CORE.**

(1) Remove the left support and right support.

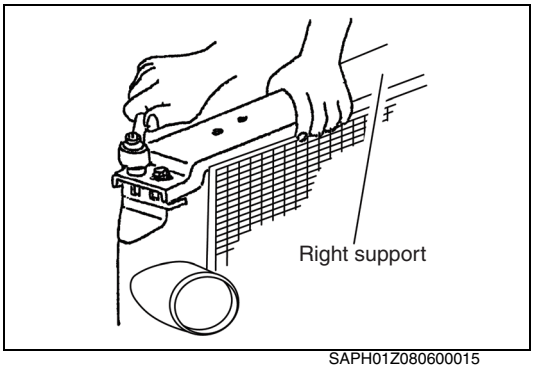


SAPH01Z080600015

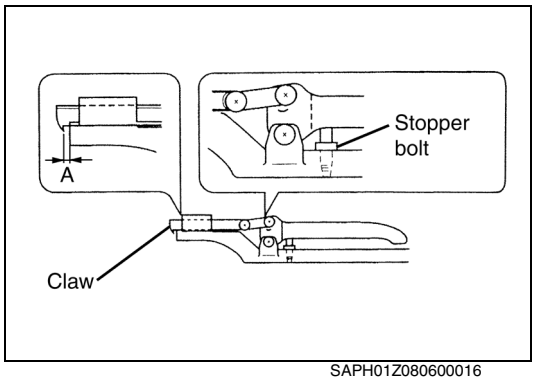

SAPH01Z080600016

(2) Grip the handle until it hits to the stopper bolt, then adjust the dimensions A with stopper bolt.
**Dimension A: 0.2-0.3 mm {0.0079-0.0118 in.}**
**SST: Radiator tool (S0976-01030)**

**NOTICE**
**Be sure to adjust the dimension to prevent damage of the claw.**

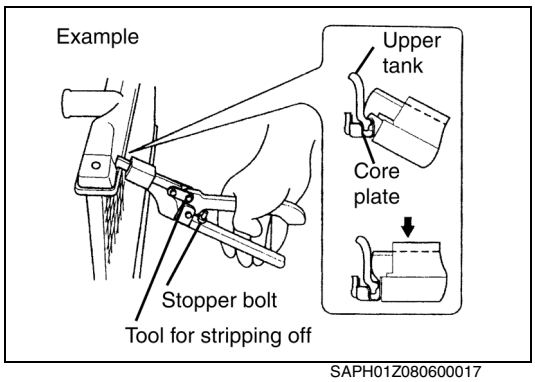

SAPH01Z080600017

(3) Using a special tool, lift the staked part.

**NOTICE**
**Do not lift up tangs more than 90°.**

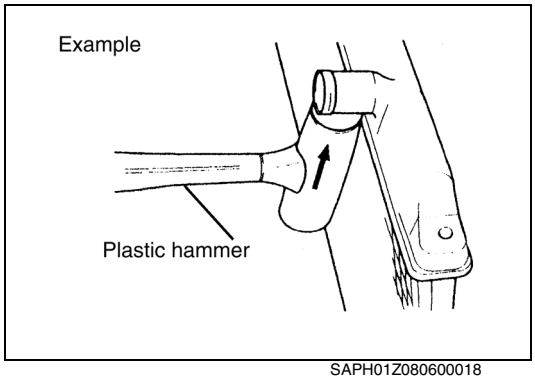

SAPH01Z080600018

(4) Remove the upper tank and lower tank from the radiator core by tapping lightly with plastic hammer.

**NOTICE**
**Do not remove the tank by forcing or prying.**

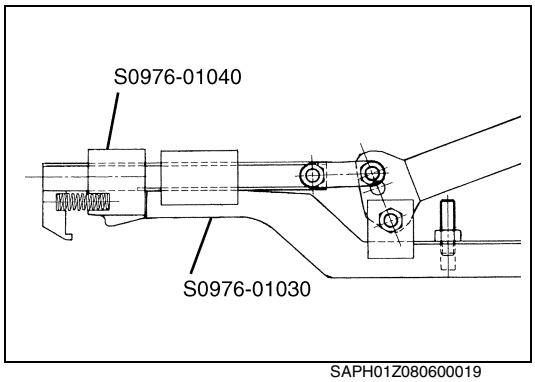

SAPH01Z080600019

## IMPORTANT POINTS - ASSEMBLY

**1. ASSEMBLE THE UPPER TANK, LOWER TANK AND RADIATOR CORE.**

(1) Exchange the crow of the radiator tool (S0976-01030) for the radiator tool (S0976-01040) as shown in the figure.
**SST:**
**Radiator tool (S0976-01030)**
**Radiator tool (S0976-01040)**

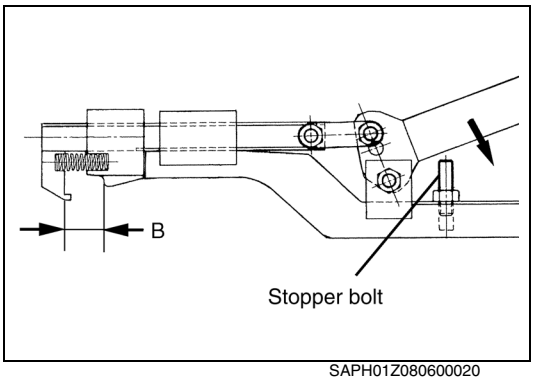

SAPH01Z080600020

(2) Grip the handle of the radiator tool until it hits the stopper bolt, then adjust the dimension B with stopper bolt.
**Dimension B: 9.5mm {0.374 in.}**

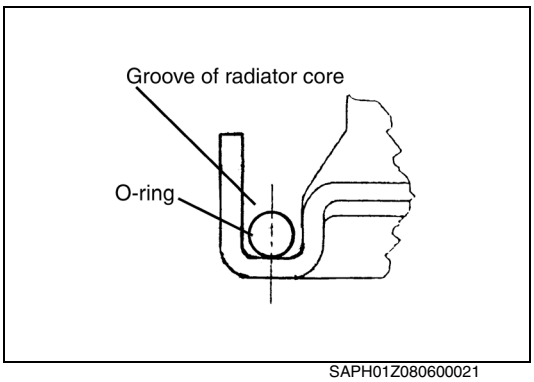

SAPH01Z080600021

(3) Install the new O-ring into the groove of the radiator core (upper and lower) in such away that it will not be twisted.

**NOTICE**
**Be sure to clean the fitting portion before installing. When cleaning, lightly rub the inside portion of the groove with the emery paper.**

(4) Install the upper tank and lower tank into the groove of the radiator core.

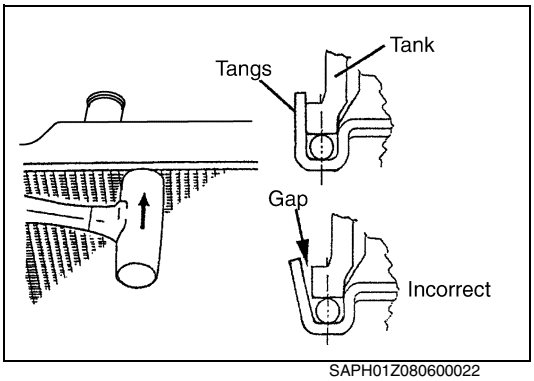

SAPH01Z080600022

(5) Tap the tangs to obtain a tight contact with the upper tank and lower tank.

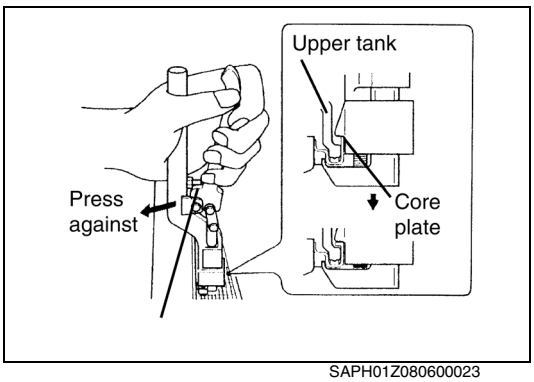

SAPH01Z080600023

(6) Press the radiator tool (caulking tool) against the side portion. Temporarily caulk the tangs several times, then proceed to the final caulking by gripping the handle until it hits the stopper bolt.

**NOTICE**
**For the positions where the radiator tool is not usable, perform the caulking with pliers.**

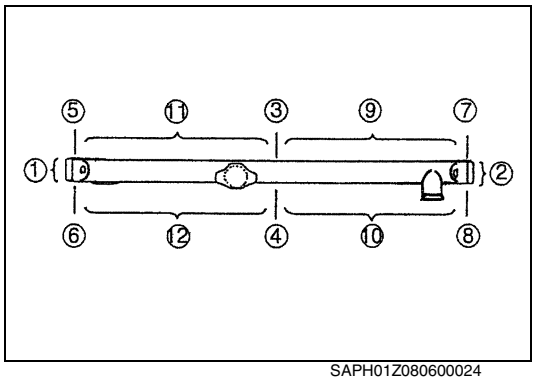


SAPH01Z080600024

**NOTICE**
**Perform the caulking according to the sequence as shown in the figure.**

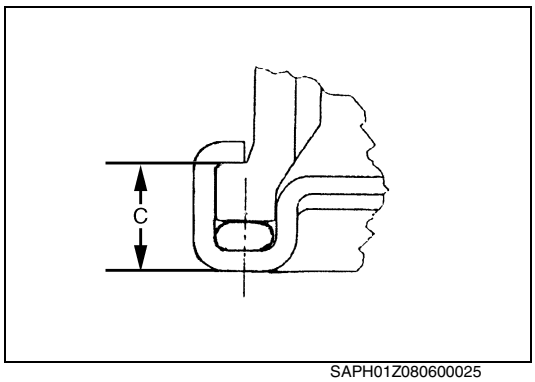


SAPH01Z080600025

(7) Check the dimension C.
**Assembly standard: 8.2-8.8 mm {0.323-0.346 in.}**
If the dimension is out of the standard value, adjust the stopper bolt of the handle once again and perform the caulking again.

# INSPECTION AND REPAIR

EN01Z0806H300001

Unit: kPa {kgf/cm$^2$, lbf/in.$^2$}

| Inspection item | | Standard | Limit | Remedy | Inspection procedure |
|---|---|---|---|---|---|
| Air leakage (When the air pressure of 100 {1,14} is applied.) | | — | — | Replace radiator. | Visual check 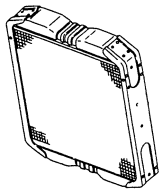 |
| Clogging of the fins | | — | — | Clean. | |
| Radiator cap valve opening pressure | Mark 0.5 | 40-58 {0.4-0.6, 5.7-8.5} | — | Replace. | Measure 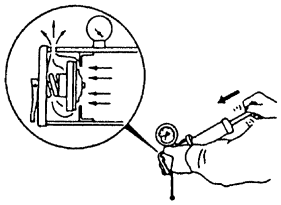 |
| Intercooler<br>• Air leakage test (when the air pressure of 196 {2.0, 28} is applied.) | | 0 mL | — | Replace the intercooler. | 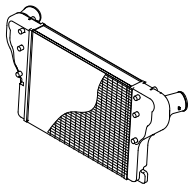 |
| • Clogging of the fins | | — | — | | |

**NOTICE**

- The coolant filler cap valve opening pressure is indicated on the cap and it should be confirmed. If the cap pressure is incorrect, there is a risk of abnormally high pressure being generated in the cooling system, which may cause the hose to drop off or burst and may result in the damage of the engine.
- When carrying out high pressure washing to remove fin clogging, do not apply excessive pressure to the fins which may cause deformation and consequent performance deterioration.

# COOLING FAN

## COMPONENT LOCATOR

EN01Z0806D100005

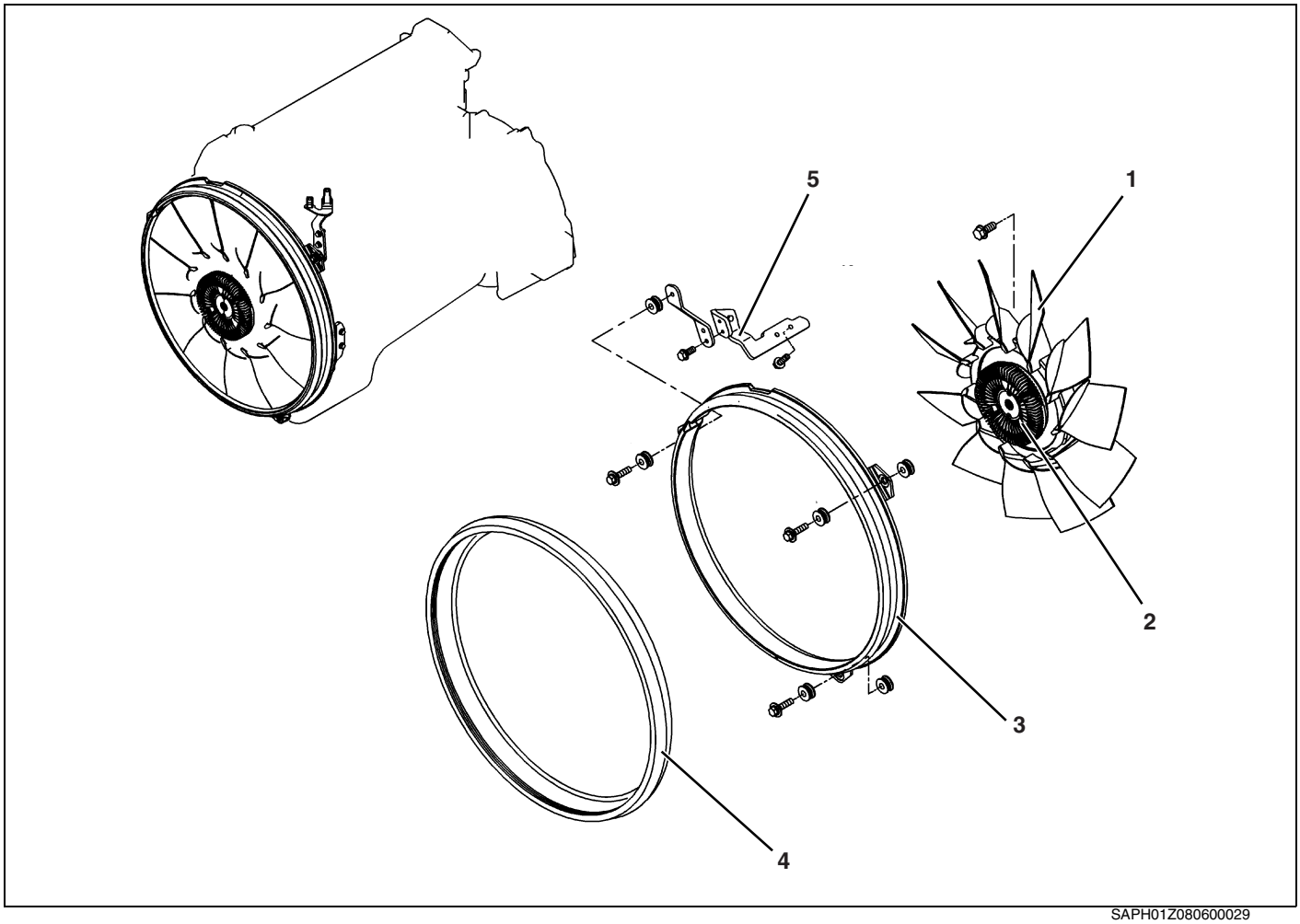


SAPH01Z080600029

| | | | |
|---|---|---|---|
| 1 | Cooling fan | 4 | Seal |
| 2 | Fan clutch | 5 | Bracket |
| 3 | Fan shroud | | |

**NOTICE**

- **Shock to the fan clutch and fan.**
  **During maintenance and inspection, be careful not to drop or strike the fan clutch or fan itself. The resulting damage may lower the performance of the fan. Also, note that the fan is made of plastic and may become damaged or deformed if force is applied to it.**
- **Replace the fan.**
  **Do not replace the fan unless it is faulty. When replacing the fan, replace with the same type. If the fan is replaced with one of a larger capacity because of overheating or, conversely is replaced with one of a smaller capacity due to overcooling, the performance may in fact be reduced and durability may be jeopardized.**
- **Other items**
  **Check the bimetal to see if there is any mud or dust on it. If the bimetal is covered with mud or dust, the fan performance will be erratic, and may result in overheating or overcooling. In such case, carefully remove mud and dust adhering to the surface of the bimetal, using a wire brush, or the like.**
  **Take particular care not to apply excessive force.**
  **Do not paint the fan or fan clutch. Do not place any paint or other reagents which are likely to dissolve plastic in contact with the fan.**

# INSPECTION AND REPAIR

EN01Z0806H300002

| Inspection item | Standard | Limit | Remedy | Inspection procedure |
|---|---|---|---|---|
| **Cooling fan and fan clutch deformation and damage** | — | — | **Replace if necessary.** | **Visual check** 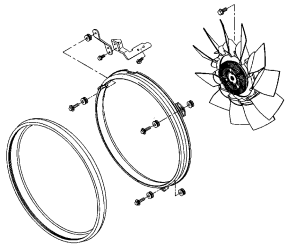 |

# FUEL SYSTEM (J08E)

EN07-001

**FUEL SYSTEM..... EN07-2**
DIAGRAM ..... EN07-2
COMPONENT LOCATOR..... EN07-3

**SUPPLY PUMP ..... EN07-4**
DESCRIPTION ..... EN07-4
COMPONENT LOCATOR..... EN07-5
SPECIAL TOOL ..... EN07-5
OVERHAUL ..... EN07-6

**COMMON RAIL..... EN07-15**
DESCRIPTION ..... EN07-15
INSPECTION..... EN07-16
REPLACEMENT ..... EN07-17

**INJECTOR..... EN07-21**
DESCRIPTION ..... EN07-21
REPLACEMENT ..... EN07-22

**PRE FUEL FILTER..... EN07-30**
DESCRIPTION ..... EN07-30
AIR BLEEDING..... EN07-31

**FUEL FILTER ..... EN07-33**
DESCRIPTION ..... EN07-33
OVERHAUL ..... EN07-34

**FUEL TANK..... EN07-37**
COMPONENT LOCATOR..... EN07-37

**FUEL CUTOFF VALVE ..... EN07-39**
COMPONENT LOCATOR..... EN07-39
OVERHAUL ..... EN07-40

# FUEL SYSTEM

## DIAGRAM

EN01Z0807J100001

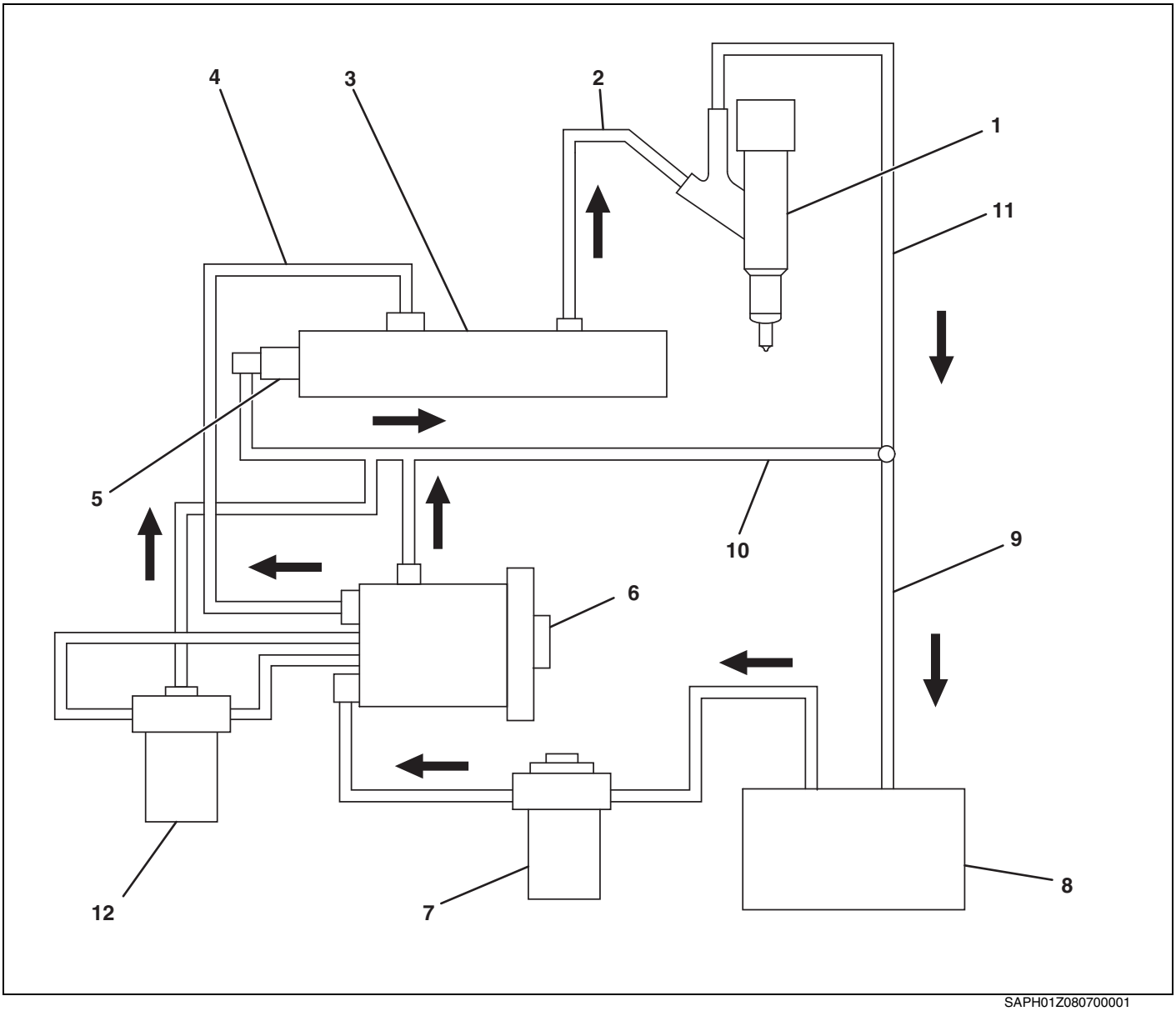


SAPH01Z080700001

| | | | |
|---|---|---|---|
| 1 | Injector | 7 | Pre fuel filter |
| 2 | Injection pipe | 8 | Fuel tank |
| 3 | Common rail | 9 | Through feed pipe |
| 4 | Pressure feeding pipe | 10 | Overflow pipe |
| 5 | Pressure limiter | 11 | Leakage pipe |
| 6 | Supply pump | 12 | Fuel filter |

# COMPONENT LOCATOR

EN01Z0807C100001

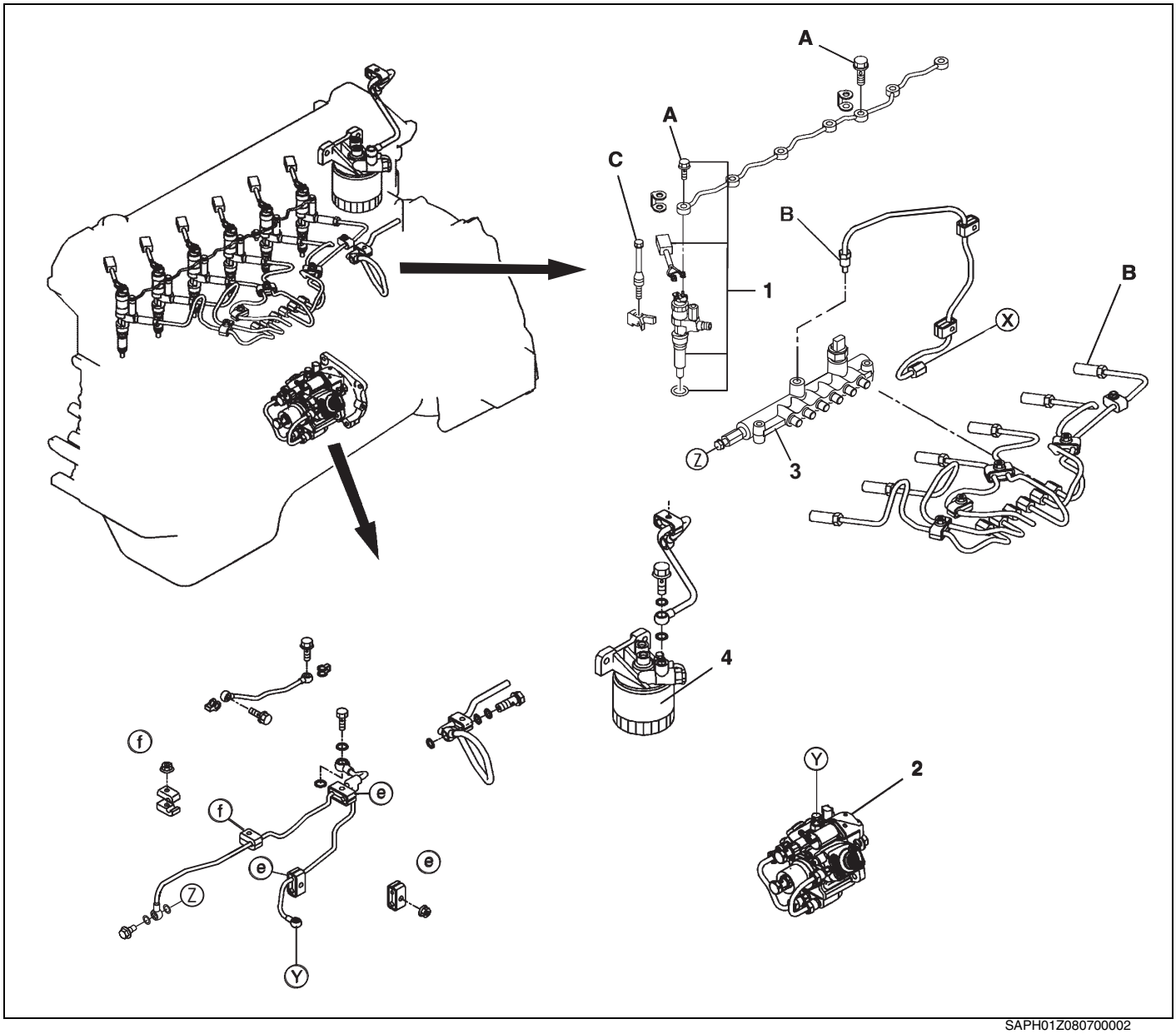


SAPH01Z080700002

| | | | |
|---|---|---|---|
| 1 | Injector | 3 | Common rail |
| 2 | Supply pump | 4 | Fuel filter |

**Tightening torque** **Unit: N·m {kgf·cm, lbf·ft}**

| | | | |
|---|---|---|---|
| A | 13.5 {138, 10} | C | 25 {250, 18} |
| B | 44 {450, 32.5} | | |

# SUPPLY PUMP

## DESCRIPTION

EN01Z0807J100002

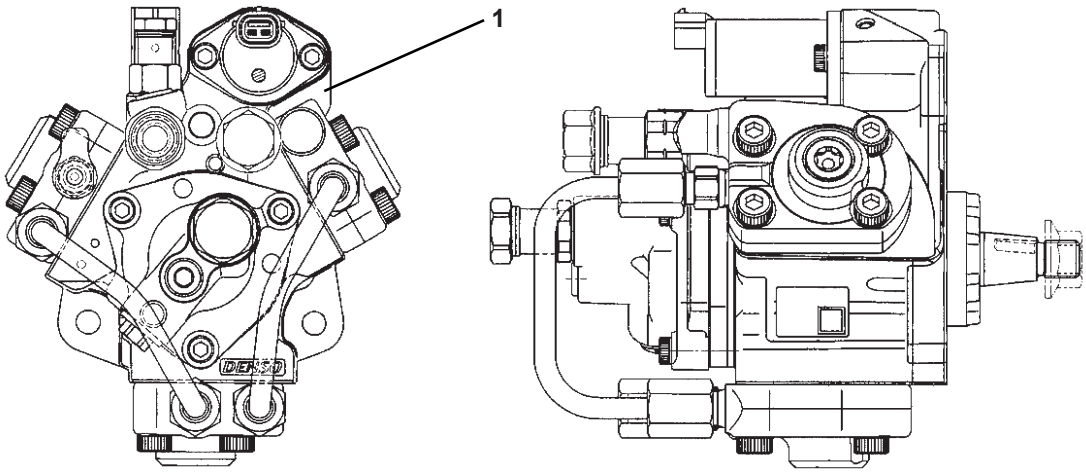


SAPH01Z080700003

| | |
|---|---|
| 1 Supply pump assembly | |

# COMPONENT LOCATOR

EN01Z0807C100002

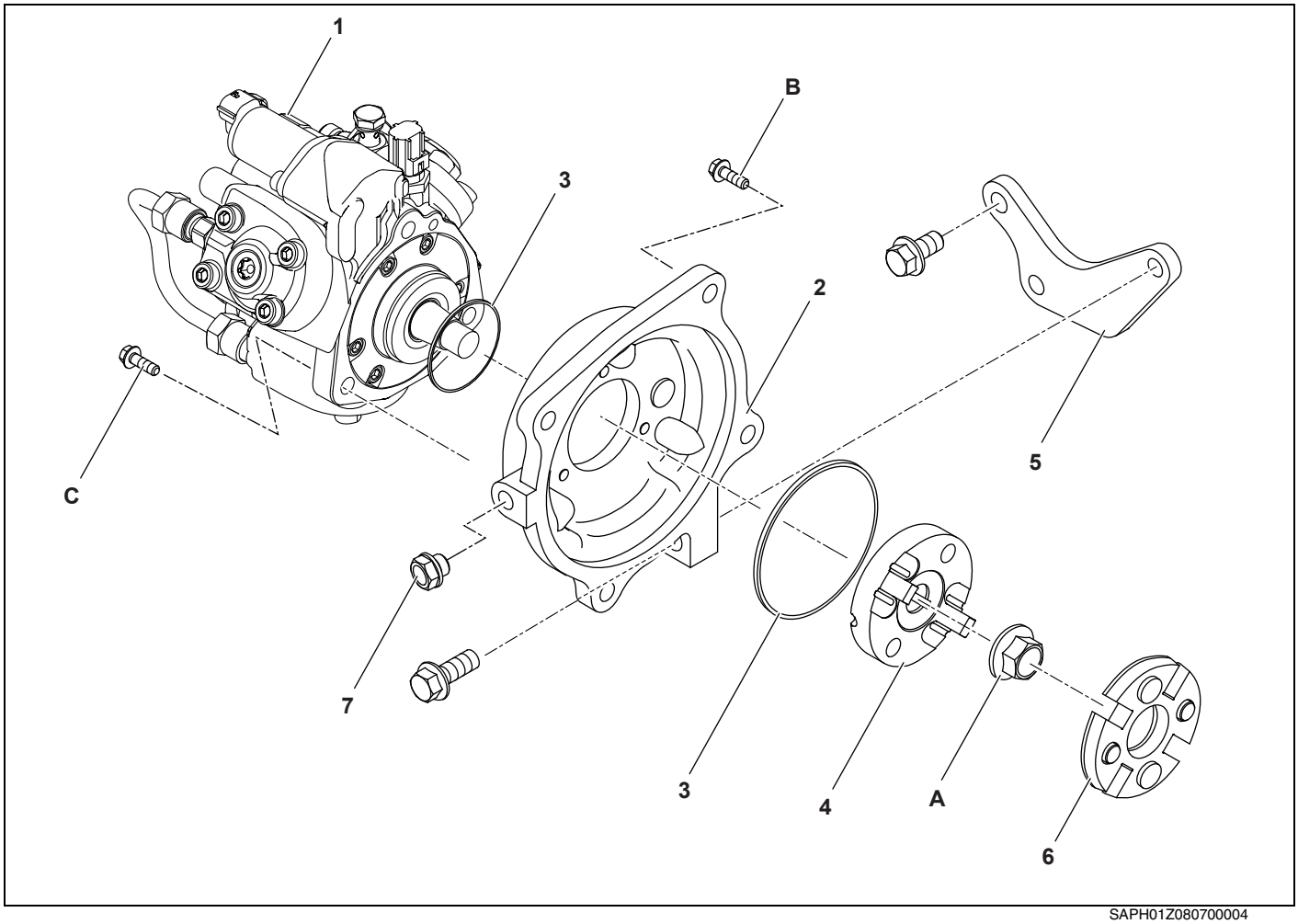


SAPH01Z080700004

| | | | |
|---|---|---|---|
| 1 | Supply pump assembly | 5 | Bracket |
| 2 | Bearing holder case | 6 | Coupling assembly |
| 3 | O-ring * | 7 | Plug |
| 4 | Coupling flange | | |

***: Nonreusable. Be sure to use new parts.**

**Tightening torque** **Unit: N·m {kgf·cm, lbf·ft}**

| | | | |
|---|---|---|---|
| A | 63.7 {650, 47} | C | 28.5 {290, 21} |
| B | 28.5 {290, 21} | | |

# SPECIAL TOOL

EN01Z0807K100001

Prior to starting an engine overhaul, it is necessary to have this special tool.

| Illustration | Part number | Tool name | Remarks |
|---|---|---|---|
| 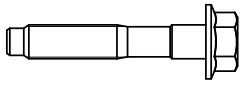 | SZ105-08067 | GUIDE BOLT | |

# OVERHAUL

EN01Z0807H200001

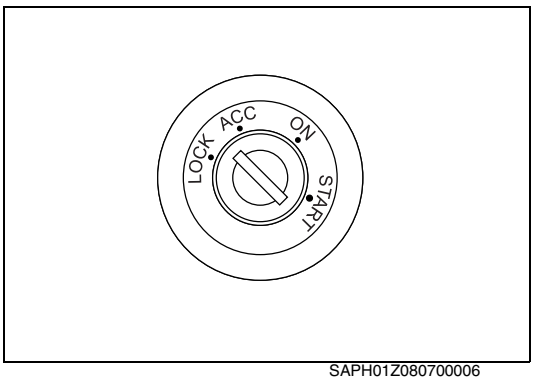

SAPH01Z080700006

## IMPORTANT POINTS - DISMOUNTING

**⚠ CAUTION**
**While working, be careful not to make dirt and water enter parts.**

**1. TURN THE STARTER SWITCH TO THE LOCK POSITION.**

**⚠ WARNING**
**Perform the following work after the engine cools off to avoid fire or burning. The fuel in the common rail could have a high temperature (approx. 100°C {212°F}) immediately after driving.**

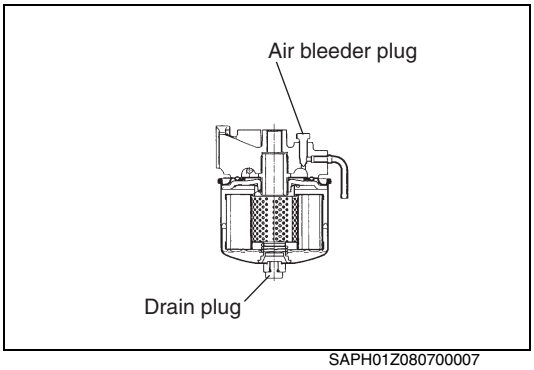

SAPH01Z080700007

**2. FUEL DISCHARGE**
(1) Prepare reservoir under the drain pipe to receive the drained fuel.

(2) Remove the drain plug of the fuel filter.
(3) Loosen the air bleeder plug of the fuel filter.
(4) Drain until no more fuel comes out.
(5) Tighten the drain plug and the air bleeder plug of the fuel filter.
**Tightening Torque:**
**Drain plug: 5.9-7.9 N·m {60.2-80.5 kgf·cm, 4.4-5.8 lbf·ft}**
**Air bleeder plug : 5-8.8 N·m {51-89.7 kgf·cm, 3.7-6.5 lbf·ft}**

**⚠ CAUTION**
**Drain the fuel in accordance with the regulation of disposal specified in each region.**

**3. REMOVING THE FUEL FILTER**
**Reference:**
**FUEL SYSTEM, FUEL FILTER,**
**OVER HAUL, REMOVING THE FUEL FILTER**
**(Page EN07-36)**

**4. REMOVING THE INTAKE PIPE**
(1) Remove the intake pipe.
Refer to the chapter **"AIR INTAKE SYSTEM"**

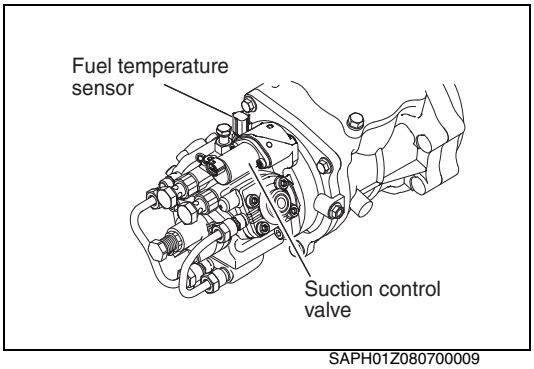

SAPH01Z080700009

**5. DISCONNECTING THE HARNESS**
(1) Disconnect the connector connected to each of the suction control valve of the supply pump and the fuel temperature sensor.

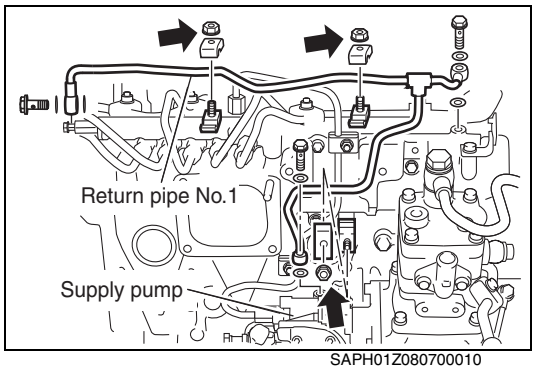

SAPH01Z080700010

**6. REMOVING THE FUEL PIPE**

(1) Unfasten the nuts (3 pcs.) to remove the clips (3 pcs.).

(2) Unfasten the union bolts (3 pcs.) securing return pipe No.1 to the pressure limiter, the inlet manifold, and the supply pump, and disconnect the return pipe No.1.

**NOTICE**

**Prepare a reservoir and a waste cloth because fuel spills when disconnecting the fuel pipe.**

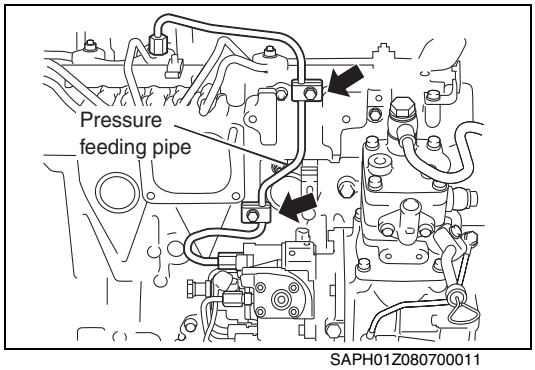

SAPH01Z080700011

**7. REMOVING THE PRESSURE FEEDING PIPE**

(1) Unfasten the nuts (2 pcs.) securing the clips, and remove the clips (2 pcs.).

(2) Loosen the nut, and remove the pressure feeding pipe.

**NOTICE**

**Prepare a reservoir and a waste cloth because fuel spills when removing the pressure feeding pipe.**

**⚠ CAUTION**

- **The pressure feeding pipes are nonreusable.**
- **Be careful when numbering the pipe because the fuel pipe may be deformed.**

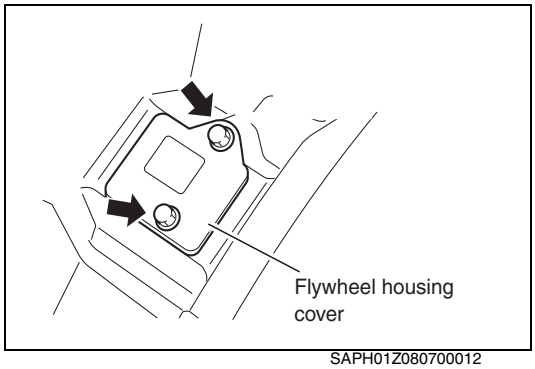

SAPH01Z080700012

**8. SETTING THE COMPRESSION STROKE TOP DEAD CENTER OF No.1 CYLINDER**

(1) Unfasten the bolts (2 pcs.) securing the flywheel housing cover, and remove the flywheel housing cover from the flywheel housing.

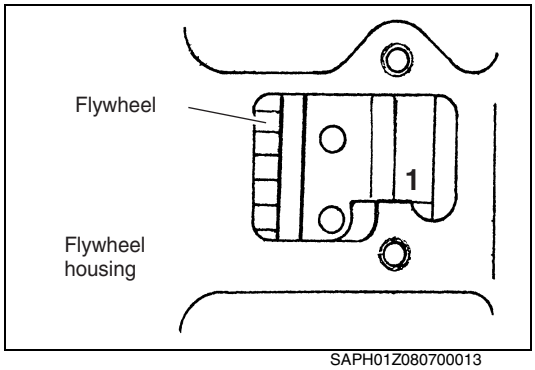

SAPH01Z080700013

(2) Turn the flywheel clockwise in the engine direction and align the No.1 cylinder mark to the pointer in the flywheel housing inspection opening.

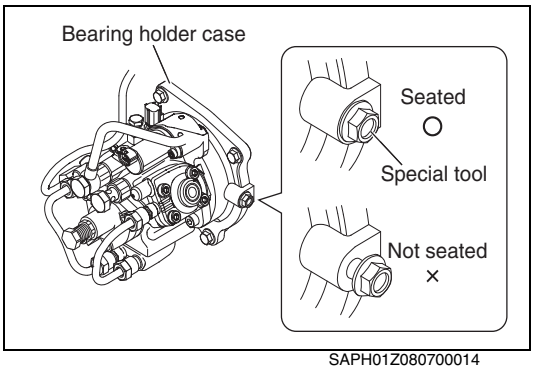

SAPH01Z080700014

(3) Remove the timing check window plug from the bearing holder case of the supply pump.

(4) Mount the special tool specified below to the timing check window of the bearing holder case to see that the bearing surface of the special tool is seated on the supply pump.
**SST: Guide bolt (SZ105-08067)**

**⚠ CAUTION**

- **If the special tool is not seated, it is in contact with a part other than the detent of the coupling flange. Do not forcibly tighten the special tool.**
- **If the special tool is not seated, the No.1 cylinder is not set at the compression stroke top dead center. In this case, remove the special tool, turn the crankshaft, and install the special tool again to see if it is seated.**
- **Before turning the crankshaft, do not fail to pull out the special tool.**
- **Do not perform cranking with the special tool inserted.**

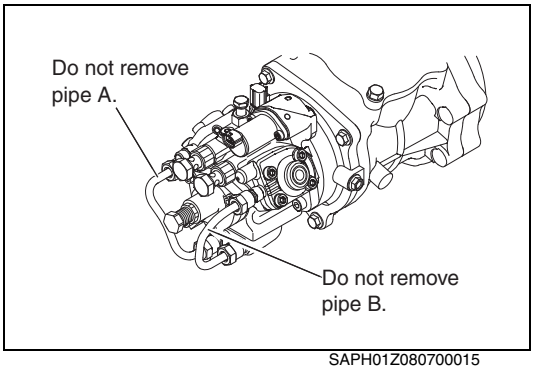

SAPH01Z080700015

**9. REMOVING THE SUPPLY PUMP**

**⚠ CAUTION**

- **While working, be careful not to make dirt and water enter parts.**
- **Do not remove pipe A and pipe B.**
- **Be careful not to apply excessive load on pipe A and pipe B. (Pipe twist will cause fuel leakage.)**
- **Do not hold pipe A or pipe B when carrying the pump.**

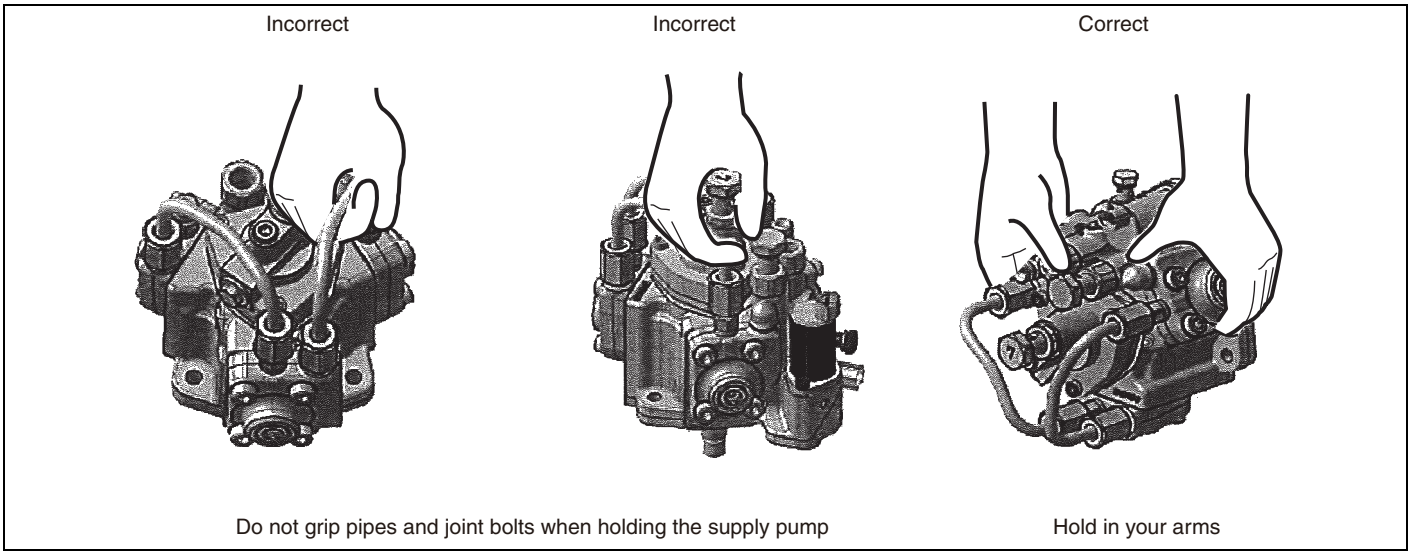

SAPH01Z080700016

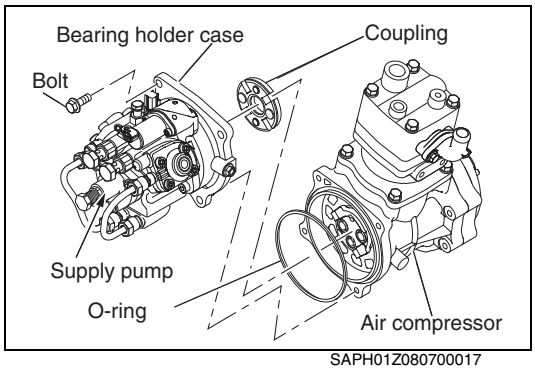

SAPH01Z080700017

(1) Unfasten the bolts (4 pcs.) securing the supply pump, and remove the supply pump, the coupling, and the O-ring from the air compressor.

**⚠ CAUTION**
**Remove the supply pump and the bearing holder case together.**

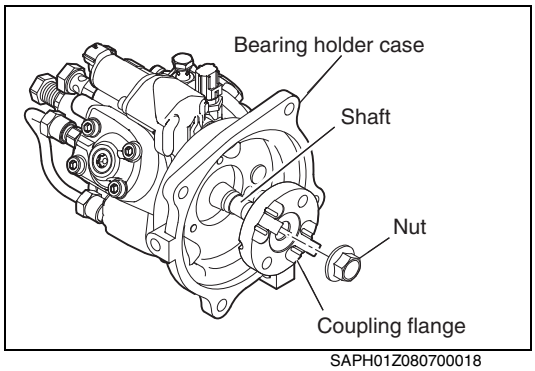

SAPH01Z080700018

(2) Unfasten the nut with the coupling flange locked with a vise, and remove the coupling flange.

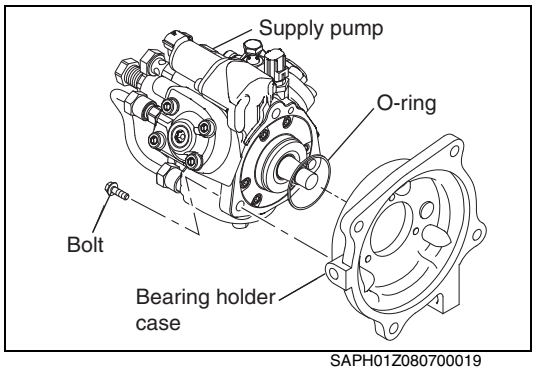

SAPH01Z080700019

(3) Unfasten the bolts (3 pcs.) to remove the bearing holder case and the O-ring from the supply pump.

## INSPECTING THE COMPONENT PARTS

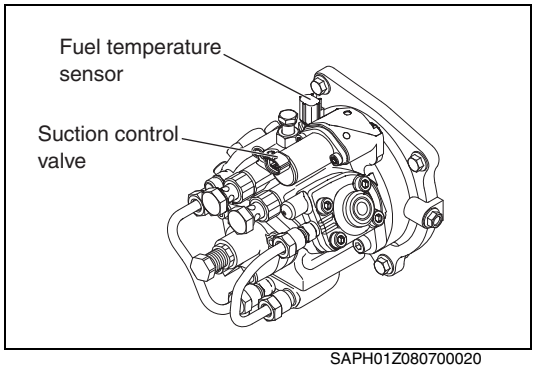

SAPH01Z080700020

**1. INSPECTING THE SUCTION CONTROL VALVE AND THE FUEL TEMPERATURE SENSOR**

(1) Using HINO DX II , inspect the suction control valve and the fuel temperature sensor. If some abnormalities are found, replace the supply pump.

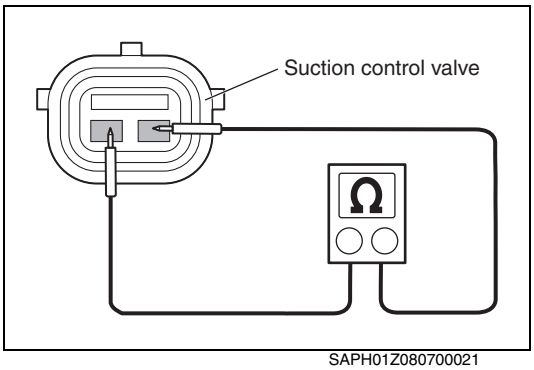

SAPH01Z080700021

**2. INSPECTING THE RESISTANCE OF THE SUCTION CONTROL VALVE**

(1) Using a circuit tester, measure the resistance between the terminals. If the measured value is in excess of the standard value, replace the supply pump.

| Standard value (at a temperature of 20°C {68°F}) | 1.6-2.6 Ω |
|---|---|

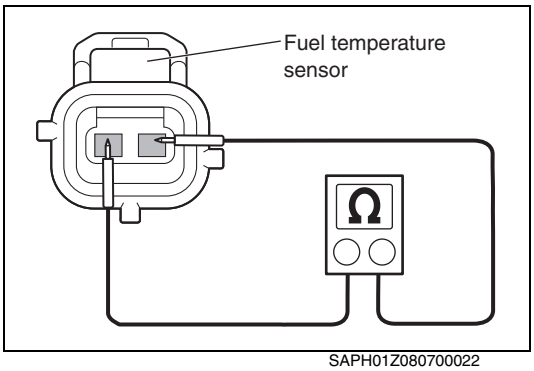

SAPH01Z080700022

**3. INSPECTING THE RESISTANCE OF THE FUEL TEMPERATURE SENSOR**

(1) Using a circuit tester, measure the resistance between the terminals. If the measured value is in excess of the standard value, replace the supply pump.

| Temperature 20°C {68°F} | Resistance (kΩ) |
|---|---|
| -20 {-4} | 13.84 - 16.33 |
| 20 {68} | 2.32 - 2.59 |
| 80 {176} | 0.310 - 0.326 |
| 110 {230} | 0.1399 - 0.1435 |

**NOTICE**

**If SCV and fuel temperature sensor need replacements, they should be serviced by Denso Service Dealer.**

## MOUNTING THE SUPPLY PUMP

**⚠ CAUTION**

- **While working, be careful not to make dirt and water enter parts.**
- **Before mounting parts, make sure that there is no dirt on the connection between them.**
- **Air enters the fuel pipe in the process of mounting the pre fuel filter case. After mounting is completed, thoroughly purge air from the fuel pipe.**

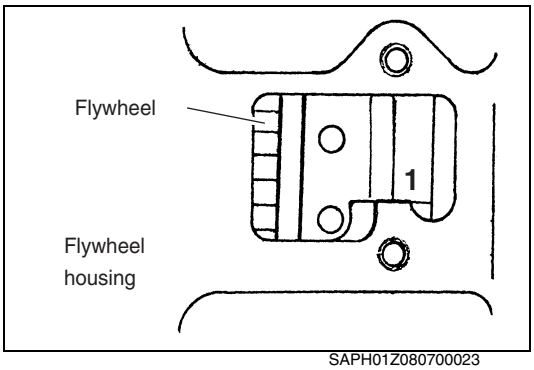

SAPH01Z080700023

**1. COMPRESSION UPPER DEAD CENTER SETTING OF NO.1 CYLINDER**

(1) Turn the flywheel clockwise in the engine direction and align the No.1 cylinder mark to the pointer in the flywheel housing inspection opening.

**NOTICE**

- **Refer to the section "ENGINE TUNEUP" in the chapter "ENGINE INTRODUCTION".**
- **Make sure that the No.1 cylinder is positioned at the top dead center point of the compression stroke.**

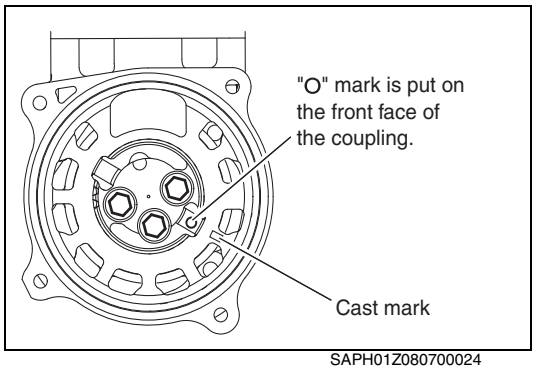

SAPH01Z080700024

**2. ADJUSTING THE TOP OF THE AIR COMPRESSOR**

(1) Align the cast mark on the air compressor with the "O" mark put on the front face of the coupling.

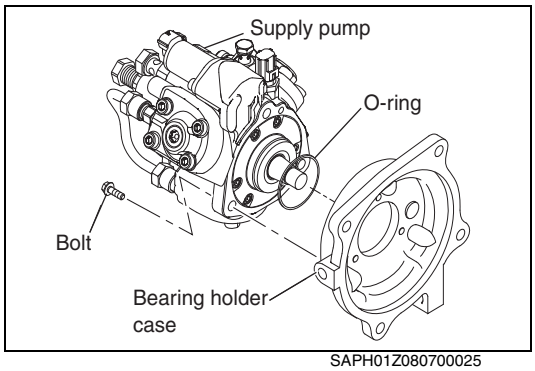

SAPH01Z080700025

**3. MOUNTING THE SUPPLY PUMP**

(1) Replace the O-ring with a new one, and mount the bearing holder case to the supply pump using the bolts (3 pcs.).

**Tightening Torque:**
**28.5 N·m {290 kgf·cm, 21 lbf·ft}**

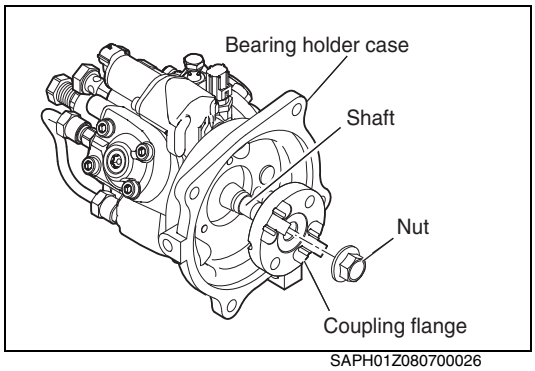

SAPH01Z080700026

(2) Install the coupling flange to the shaft.

(3) Fix the supply pump and tighten the nuts while preventing the coupling flange from rotating using a vise.

**Tightening Torque:**
**63.7 N·m {650 kgf·cm, 47 lbf·ft}**

**⚠ CAUTION**
**Do not use an special tool to lock the shaft.**

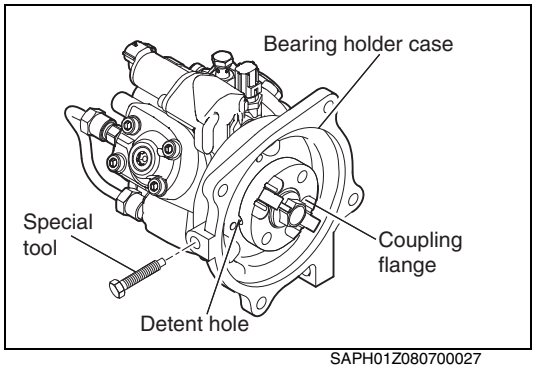

SAPH01Z080700027

(4) Insert the special tool specified below into the bearing holder case and bring it into close contact with the detent of the coupling flange.

**SST: Guide bolt (SZ105-08067)**

**⚠ CAUTION**

- **Do not tighten the special tool by applying it to a part other than the detent of the coupling, or do not use a tool other than the special tool for locking.**
- **The special tool is not designed to allow its tip to come into contact with the end of the detent hole. (The clearance at the tip is 2 mm {0.079 in.}.)**

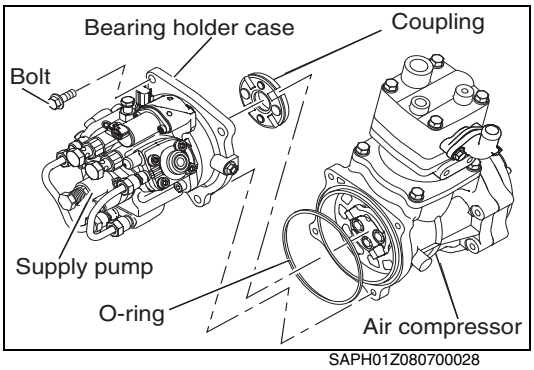

SAPH01Z080700028

(5) Replace with a new O-ring, and mount the coupling and the supply pump to the air compressor using the bolts (4 pcs.).

**Tightening Torque:**
**28.5 N·m {290 kgf·cm, 21 lbf·ft}**

**⚠ CAUTION**
**Mount the coupling and the supply pump to the air compressor with the No.1 cylinder set at the compression stroke top dead center and the cast mark on the air compressor and the "O" mark on the front face of the coupling aligned with each other.**

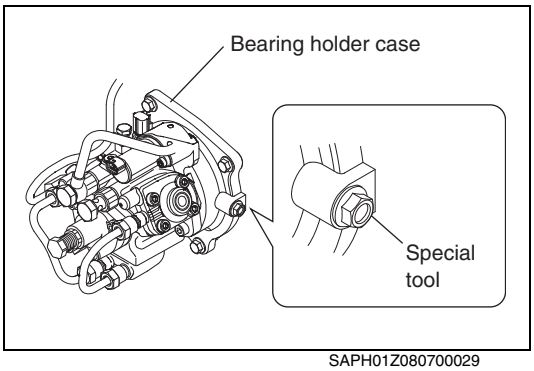

SAPH01Z080700029

(6) Make sure that the No.1 cylinder is set at the compression stroke top dead center, and then remove the special tool and mount the timing checking window plug.

**⚠ CAUTION**
- **After all parts are assembled, do not fail to remove the special tool and mount the timing checking window plug.**
- **Before turning the crankshaft, do not fail to pull out the special tool.**
- **Do not perform cranking with the special tool inserted.**

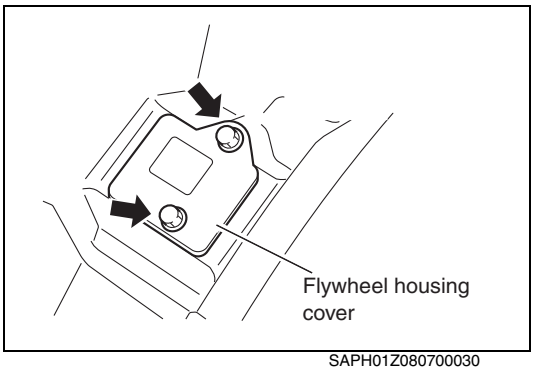

SAPH01Z080700030

(7) Mount the flywheel housing cover to the flywheel housing with the bolts (2 pcs.).

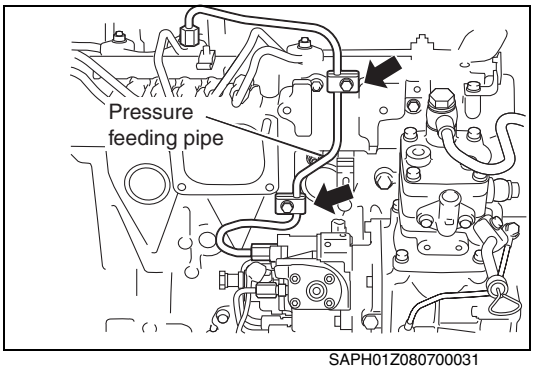

SAPH01Z080700031

**4. MOUNTING THE PRESSURE FEEDING PIPE**

(1) Mount the pressure feeding pipe.
**Tightening torque:**
**(Supply pump side)**
**44 N·m {450 kgf·cm, 32.5 lbf·ft}**
**(Common rail side)**
**44 N·m {450 kgf·cm, 32.5 lbf·ft}**

**⚠ CAUTION**
**Always replace the pressure feeding pipe by a new one because the pipe is subjected to high pressure; reusing the same pipe may result in a fuel leak.**

(2) Mount the clips (2 pcs.) with the nuts (2 pcs.) and fix the pressure feeding pipe.

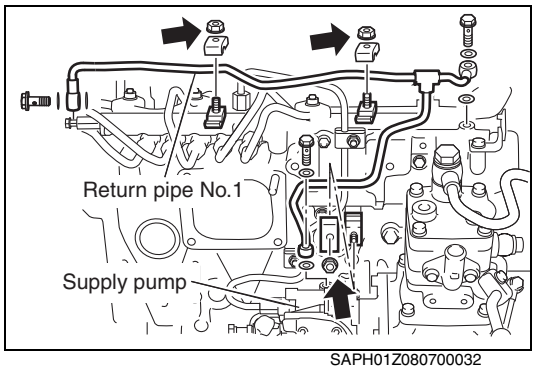

SAPH01Z080700032

**5. MOUNTING THE FUEL PIPE**

(1) Replace the gasket with a new one, and mount return pipe No.1 on the supply pump, the inlet manifold, and the pressure limiter with the union bolts (3 pcs.) that secured the return pipe.
**Tightening torque:**
**(Supply pump side)**
**7.9-12.7 N·m {80-129 kgf·cm, 5.8-9.3 lbf·ft}**
**(Inlet manifold side)**
**30 N·m {305 kgf·cm, 22 lbf·ft}**
**(Pressure limiter side)**
**20 N·m {205 kgf·cm, 15 lbf·ft}**

**NOTICE**

- **Do not use a power tool.**
- **For supply pump, use M10 x 1.0 union bolt (Banjo bolt) without any engraved marking.**
- **For inlet manifold, use M14 x 1.5 union bolt (Banjo bolt) without any engraved marking.**
- **For pressure limiter, use colored M10 x 1.0 union bolt (Banjo bolt).**

(2) Mount the clips (3 pcs.) with the nuts (3 pcs.) and fix the return pipe.

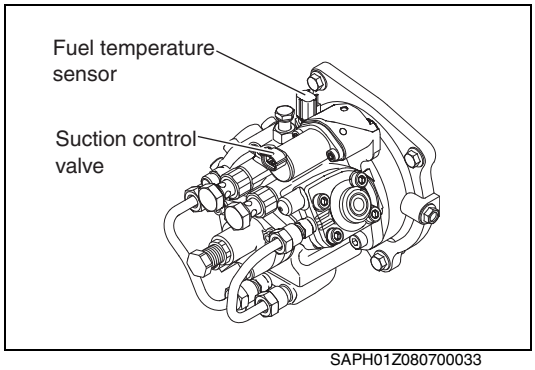

SAPH01Z080700033

**6. CONNECTING THE HARNESS**

(1) Connect the connector to the fuel temperature sensor and suction control valve of the supply pump.

**⚠ CAUTION**
**Before connecting the connectors, make sure that the terminals are free of a spark mark.**

**7. MOUNTING THE INTAKE PIPE**

(1) Mount the intake pipe.
Refer to the chapter "**AIR INTAKE SYSTEM**"

**8. MOUNTING THE FUEL FILTER**

**Reference:**
**FUEL SYSTEM, FUEL FILTER,**
**OVER HAUL, MOUNTING THE FUEL FILTER**
**(Page EN07-36)**

**9. AIR BLEEDING OF FUEL SYSTEM**

(1) Air bleeding.
Refer to the chapter "**AIR BLEEDING**"

**10. RESET THE ECU DEFAULT VALUE.**

**NOTICE**

- **It is necessary to reset the ECU default value using the diagnosis tool at the time of supply pump service replacement. In addition, the ECU has a function enabling it to learn the performance of the supply pump at the time of ECU service replacement, so ensure sufficient time (several minutes) is available.**
- **Diagnosis tool refer to chapter "TROUBLE SHOOTING" (S7-UNAE13* or S7-CANE13*). ECU default value can be reset by "Difference learning after pump replacement" in the "Initial setting/Initial learning" menu on HINO DX II "Customization" function.**

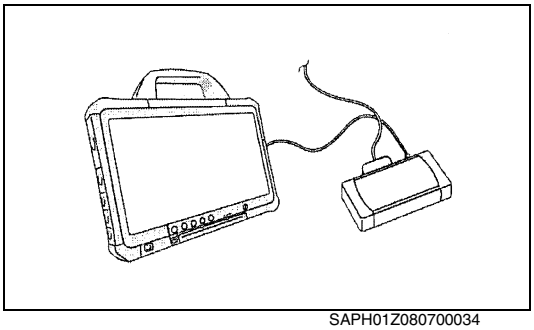

SAPH01Z080700034

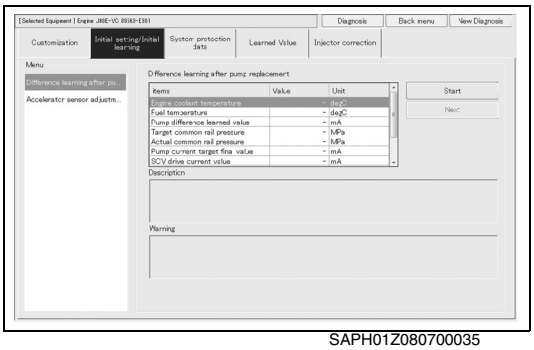


SAPH01Z080700035

# COMMON RAIL

## DESCRIPTION

EN01Z0807J100003

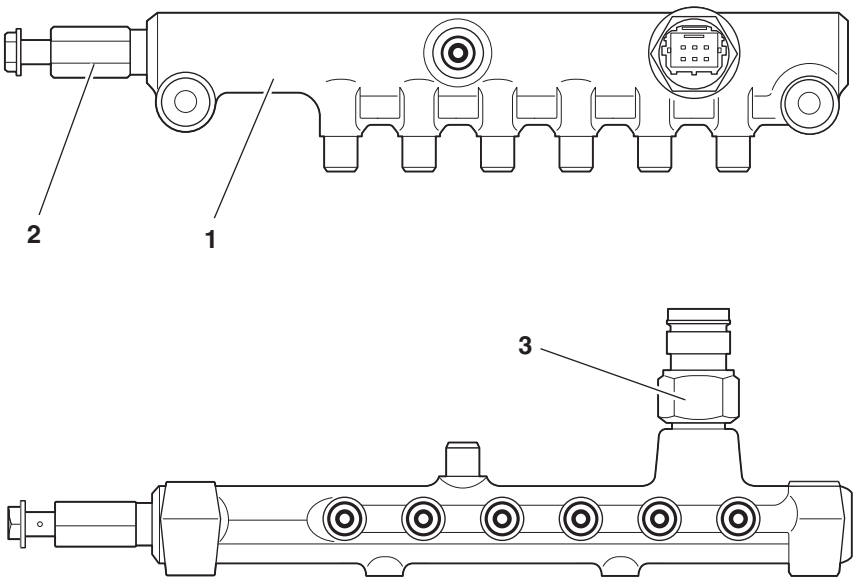


SAPH01Z080700036

| | | | |
|---|---|---|---|
| 1 | Common rail | 3 | Pressure sensor * |
| 2 | Pressure limiter | | |

*: Nonreusable. Be sure to use new parts.

# INSPECTION

EN01Z0807J100004

## INSPECTING THE COMMON RAIL

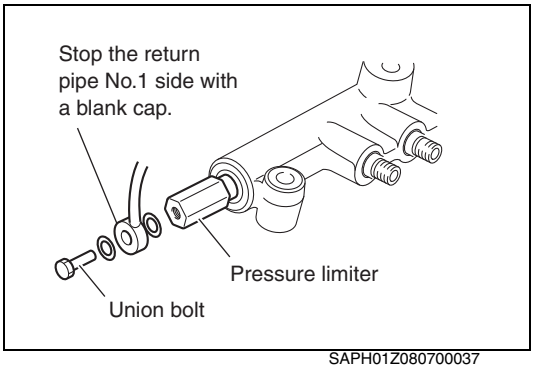


SAPH01Z080700037

### 1. INSPECTING THE PRESSURE LIMITER

(1) Unfasten the union bolt securing the pressure limiter.
(2) Stop the return pipe No.1 side with a blank cap to prevent the outflow of fuel.

**⚠ CAUTION**
**While working, be careful not to make dirt and water enter parts.**

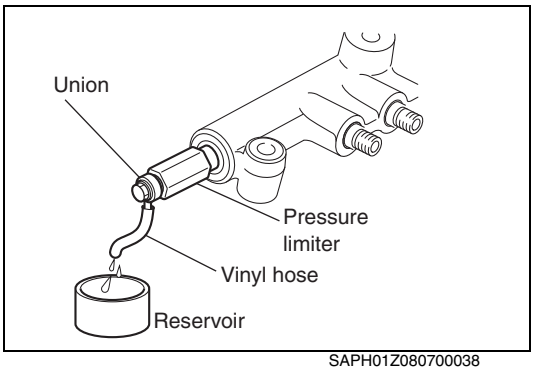


SAPH01Z080700038

(3) Mount the union to the pressure limiter, and connect a vinyl hose to the end of the union.
(4) Place a fuel reservoir under the free end of the vinyl hose.
(5) Start the engine. If the fuel continuously flows out, replace the pressure limiter with a common rail assembly.

**⚠ WARNING**
**When the pressure limiter is working, fuel flows out at a high temperature and pressure. Serious injury like scalding could result from this hot fuel being blown out under pressure.**

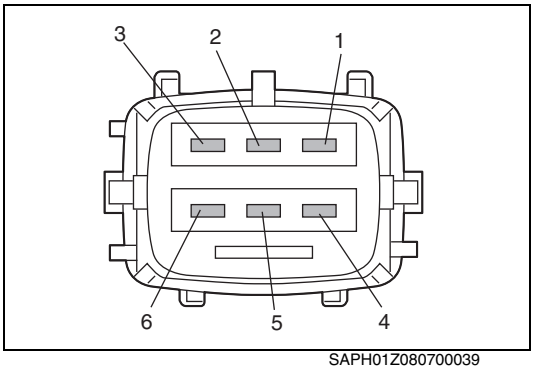


SAPH01Z080700039

### 2. INSPECTING THE COMMON RAIL PRESSURE SENSOR

(1) Using a circuit tester, measure the resistance between the terminals. If the measured value is in excess of the standard value, replace the common rail assembly.

| Terminal to be measured | Standard value (kΩ) At 20°C {68°F} with the engine turned off |
|---|---|
| 1 ↔ 2 | 1.05-3.55 |
| 5 ↔ 6 | |
| 2 ↔ 3 | 6.7-18.7 |
| 4 ↔ 5 | |

# REPLACEMENT

EN01Z0807H200002

## REMOVING THE COMMON RAIL

**⚠ CAUTION**

- **While working, be careful not to make dirt and water enter parts.**
- **Clean off surrounding area of the nozzle and the fuel line connectors.**

### 1. DISCONNECTING THE HARNESS

(1) Disconnect the connector connected to the common rail pressure sensor.

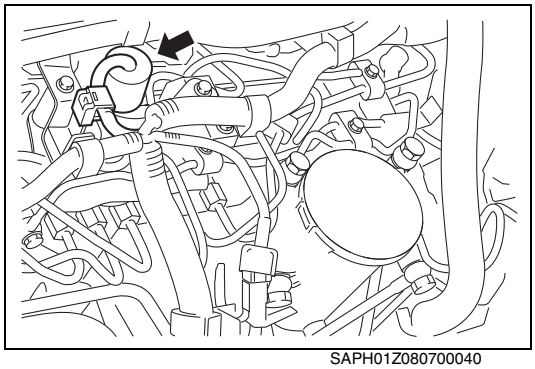

SAPH01Z080700040

**⚠ CAUTION**

**Pressing the spring lock of the female connector, disengage the female connector from the male connector.**

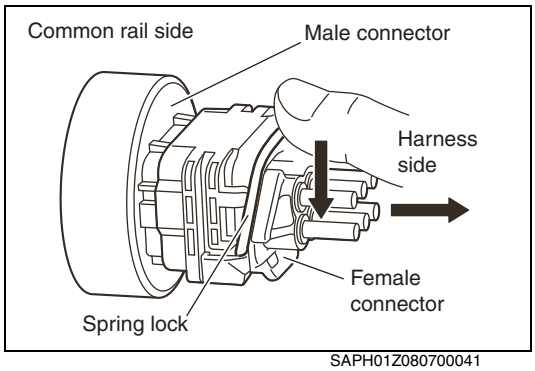


SAPH01Z080700041

### 2. DISCONNECTING THE FUEL PIPE

(1) Unfasten the union bolt securing return pipe No.1, and disconnect the return pipe No.1 from the pressure limiter.

**NOTICE**

**Prepare a reservoir and a waste cloth because fuel spills when disconnecting the fuel pipe.**

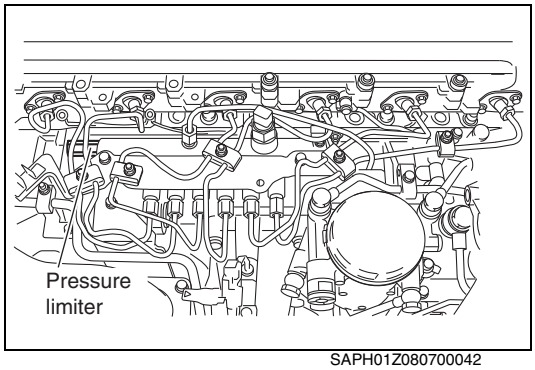


SAPH01Z080700042

### 3. REMOVING THE INJECTION PIPE

(1) Remove the injection pipe from the common rail.

### 4. REMOVING THE PRESSURE FEEDING PIPE

(1) Remove the pressure feeding pipe from the common rail and the supply pump.

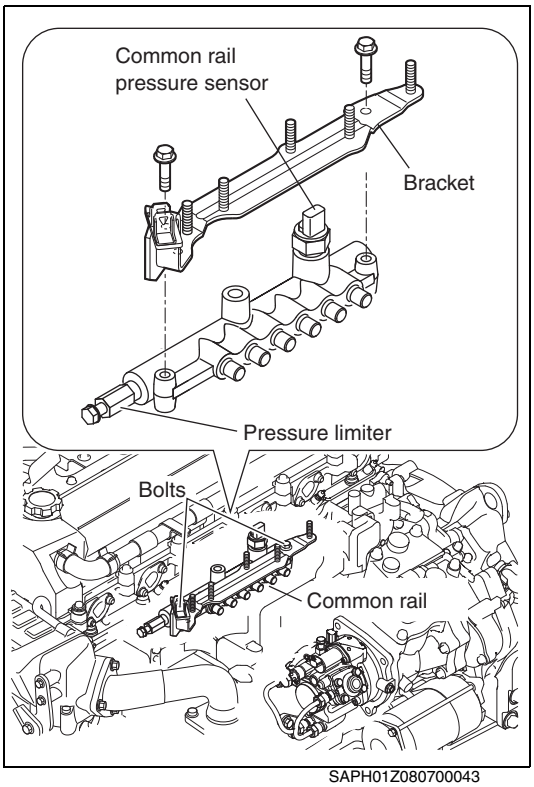

SAPH01Z080700043

**5. REMOVING THE COMMON RAIL**

(1) Unfasten the bolts (2 pcs.) securing the common rail, and remove the common rail and the bracket from the intake manifold.

**⚠ CAUTION**

- **Protect with clean vinyl to avoid entry of dirt into the common rail.**
- **Remove dirt from around each part, and detach the common rail.**
- **Remove the common rail together with, the common rail pressure sensor, and the pressure limiter.**

**NOTICE**

**Prepare a reservoir and a waste cloth because fuel spills when removing the common rail.**

## MOUNTING OF THE COMMON RAIL

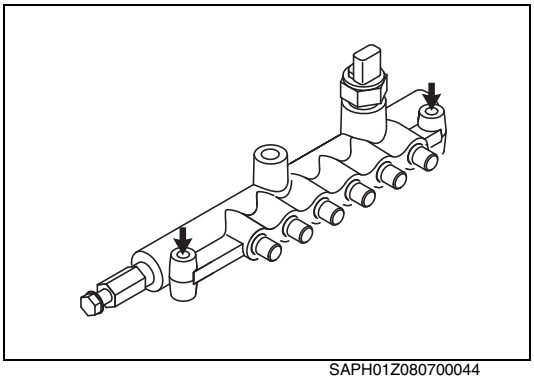
SAPH01Z080700044

**1. INSTALL THE COMMON RAIL ASSY.**

(1) Install the common rail with 2 bolts.
**Tightening Torque:**
**28.5 N·m {290 kgf·cm, 21 lbf·ft}**

**⚠ CAUTION**

- **While working, be careful not to make dirt and water enter parts.**
- **Before mounting a part, check that there is no dirt on the connection between the parts.**

(2) Connect the connector.

**⚠ CAUTION**

**Before inserting the connector, check that there are no spark traces on the terminals.**

**NOTICE**

- **Be careful to prevent dust from entering inside the common rail and parts when the mounting is performed. Dust and foreign matter must not adhere to the seats of the parts and common rail main unit.**
- **After mounting is completed, check fuel leak using "Activation Test" menu of HINO DX II .**

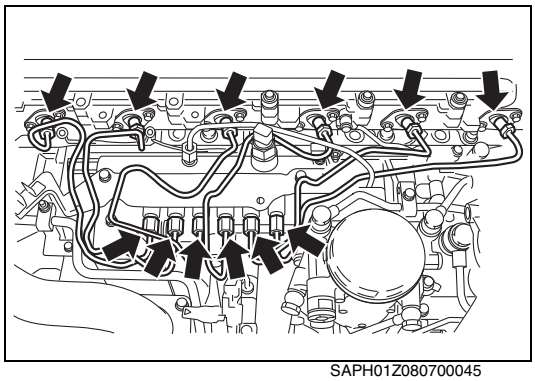
SAPH01Z080700045

(3) Tighten the injection pipe nuts to the specified torque.

**Tightening Torque:**
**44 N·m {450 kgf·cm, 32.5 lbf·ft}**

**⚠ CAUTION**

- **While working, be careful not to make dirt and water enter parts.**
- **Before mounting a part, check that there is no dirt on the connection between the parts.**
- **Air enters the fuel pipe while working. After working, be sure to purge air.**

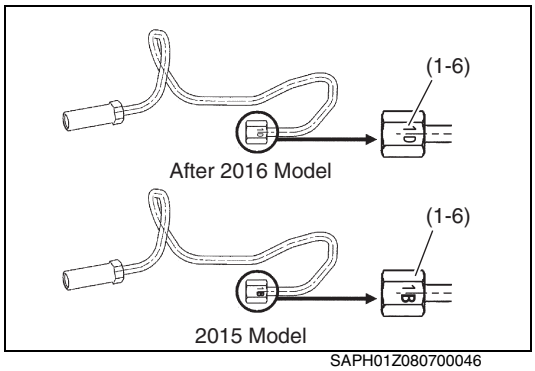

SAPH01Z080700046

**NOTICE**
**When installing the fuel injection pipe, do not make a mistake to assemble 2015 model fuel injection pipe.**

| Fuel injection pipe | After 2016 Model (J08E-VB, VC) | 2015 Model (J08E-VB, VC) |
|---|---|---|
| No.1 injector | 1D | 1B |
| No.2 injector | 2D | 2B |
| No.3 injector | 3D | 3B |
| No.4 injector | 4D | 4B |
| No.5 injector | 5D | 5B |
| No.6 injector | 6D | 6B |

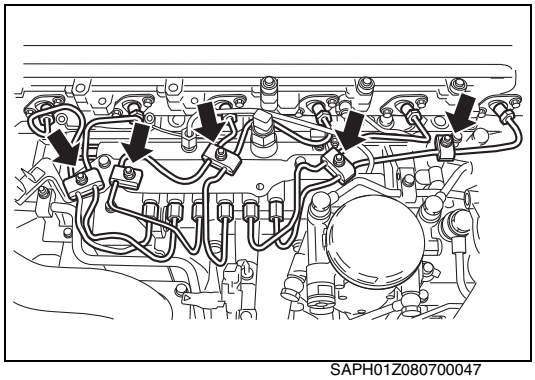
SAPH01Z080700047

(4) Fit the clips (5 pcs) and fix the injection pipe.

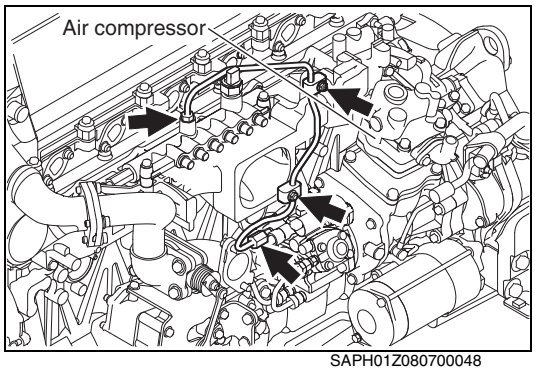

SAPH01Z080700048

(5) Tighten the pressure feeding pipe nuts to the specified torque.
(6) Fit the clips (2 pcs) and fix the pressure feeding pipe.

**Tightening Torque:**
**44 N·m {450 kgf·cm, 32.5 lbf·ft}**

**⚠ CAUTION**

- **While working, be careful not to make dirt and water enter parts.**
- **Before mounting a part, check that there is no dirt on the connection between the parts.**
- **Air enters the fuel pipe while working. After working, be sure to purge air.**

**NOTICE**

- **If the tightening torque of the nuts is less than the specified value, it may cause a fuel leak. If the tightening torque of the nuts is greater than the specified value it may have a negative influence on the engine function. As a result, always perform torque management.**
- **After mounting is completed, check fuel leak by using "Fuel leak inspection" function of HINO DX II .**

# INJECTOR

## DESCRIPTION

EN01Z0807C100003

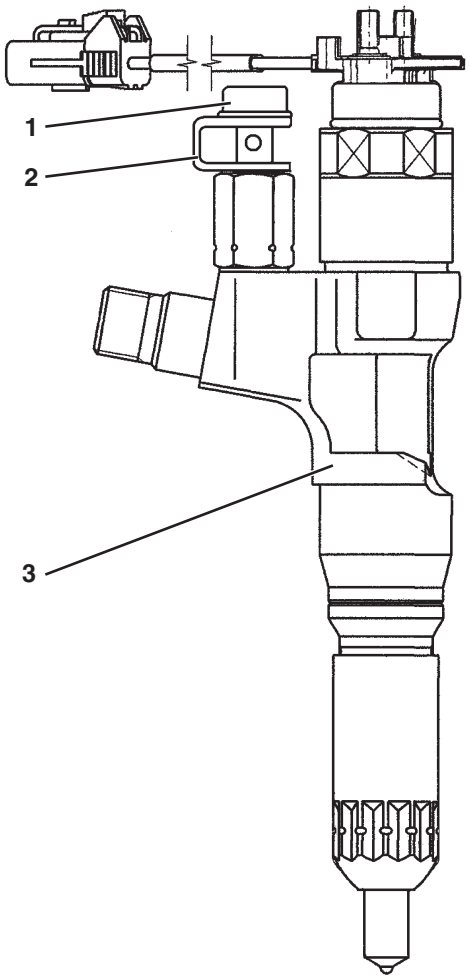


SAPH01Z080700049

| | | | |
|---|---|---|---|
| 1 | Return joint bolt | 3 | Injector assembly |
| 2 | Gasket | | |

# REPLACEMENT

EN01Z0807H200003

## REMOVING THE INJECTOR

**⚠ CAUTION**

- **While working, be careful not to make dirt and water enter parts.**
- **Clean off surrounding area of the nozzle and the fuel line connectors.**

**1. REMOVING THE HEAD COVER**

(1) Remove the head cover.
Refer to the chapter **"ENGINE MECHANICAL"**

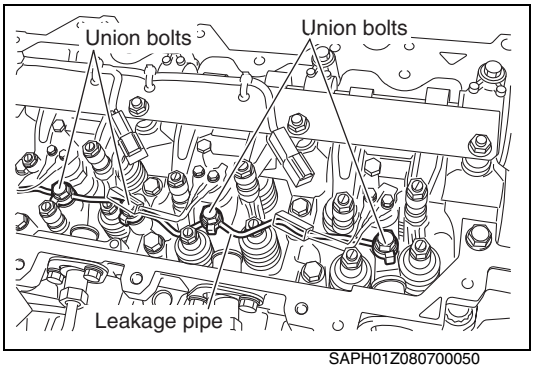

SAPH01Z080700050

**2. REMOVING THE LEAKAGE PIPE**

(1) Unfasten the union bolts (7 pcs.) to remove the leakage pipe and the gaskets (7 pcs.).

**⚠ CAUTION**
**The leakage pipe can be twisted easily. Use care in handling.**

**3. REMOVING THE INJECTOR HARNESS**

(1) Disconnect each connector connected to the injector.
(2) Unfasten the nuts (7 pcs.) securing the injector harness, and remove the injector harness together with the injector harness bracket.

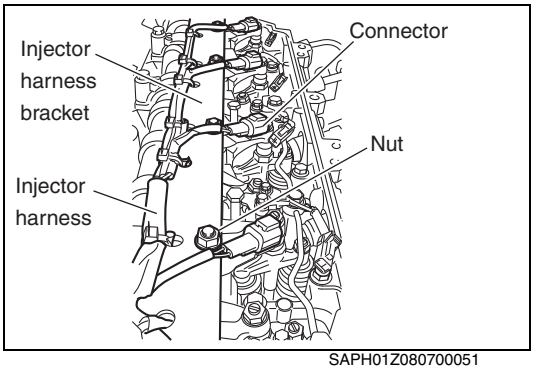

SAPH01Z080700051

**⚠ CAUTION**
**The injector harness bracket can be twisted easily. Use care in handling.**

**NOTICE**
**It is easy to disconnect the connectors by last disconnecting the one connected to the camshaft housing.**

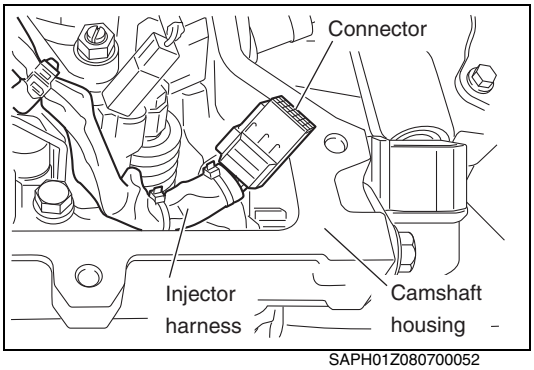

SAPH01Z080700052

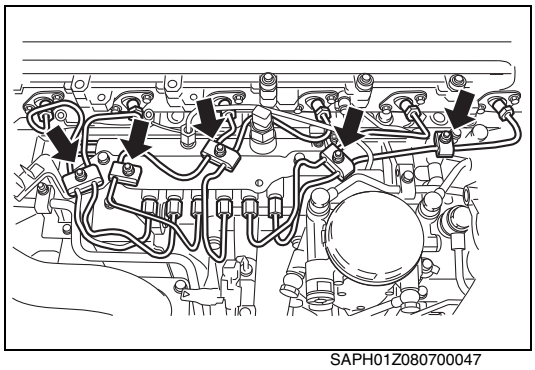

SAPH01Z080700047

**4. REMOVING THE INJECTION PIPE**

(1) Unfasten the nuts (5 pcs.) securing the clips, and remove the clips.

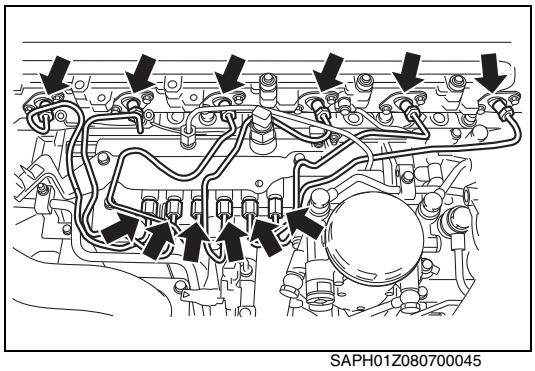

SAPH01Z080700045

(2) Loosen the nuts securing the injection pipes (6 pcs.) to remove them from the injector and the common rail.

**⚠ CAUTION**
**Do not reuse the injection pipes.**

**NOTICE**
**Prepare a reservoir and a waste cloth because fuel spills when removing the injection pipes.**

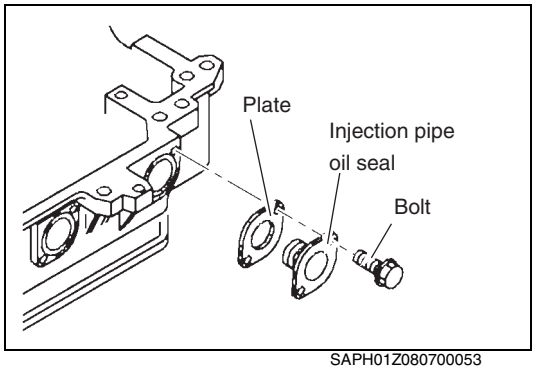


SAPH01Z080700053

**5. REMOVING THE INJECTOR**

(1) Unfasten the bolts (2 pcs.) to remove the injection pipe oil seals (6 pcs.) and plates (6 pcs.) from the cylinder head.

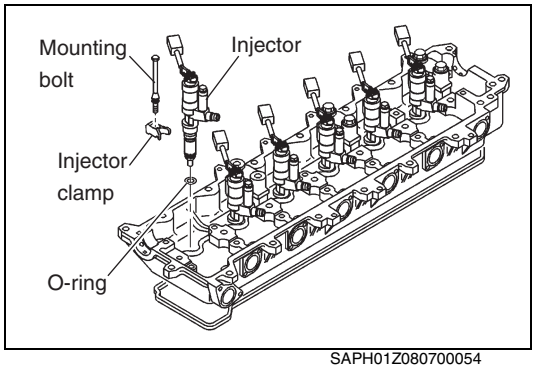


SAPH01Z080700054

(2) Unfasten the injector clamp mounting bolts to remove the injector and injector clamp.

(3) Remove the O-ring.

**NOTICE**
**Replace the O-ring with new one.**

## INSPECTION

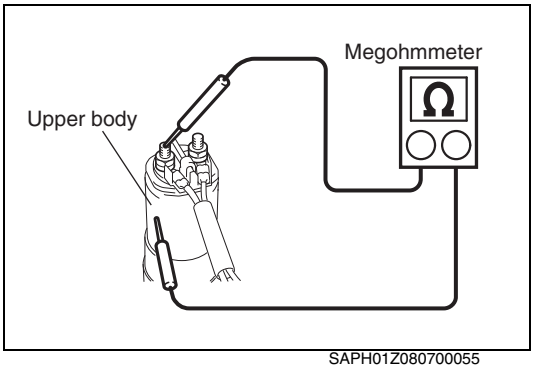

SAPH01Z080700055

### 1. INSPECTING THE RESISTANCE

(1) Using a 1,000V megohmmeter, measure the insulation resistance between either of the 2 terminals (no polarity) to which the injector harness is connected and the upper body of the injector.

**⚠ CAUTION**
**Never measure between the terminals, or the injector will be damaged.**

| Standard value (Normal temperature) | 10 MΩ or more (Use a 1,000V megohmmeter.) |
|---|---|

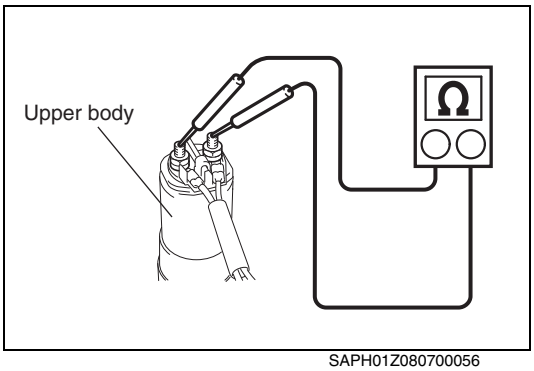

SAPH01Z080700056

(2) Using a circuit tester, measure the resistance between terminals.

| Standard value (at a temperature of 20°C {68°F}) | 0.37-0.57 Ω |
|---|---|

(3) The resistance values of (1) and (2) exceed the standard value, replace the injector.

### 2. CLEANING THE INJECTOR 2

(1) Use clean clothes to remove sludge adhered to the terminal part and its perimeter.

**⚠ CAUTION**
- **Use clean clothes to wipe off sludge without using any detergent.**
- **Use of detergent causes it to penetrate, which may lead to electric failure.**

### 3. CLEANING THE INSIDE OF THE NOZZLE SEAT

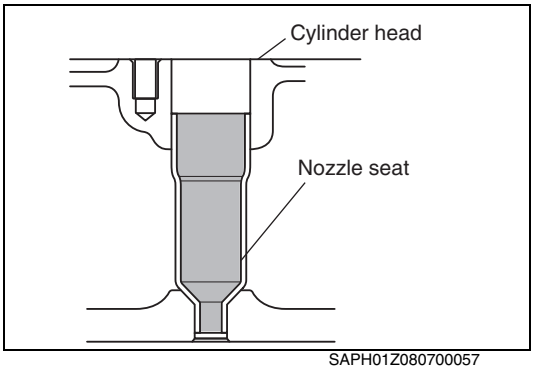

SAPH01Z080700057

(1) If sludge sticks to the inside of the nozzle seat, spray a detergent over it, wipe it off with a waste cloth, and wash it out with the detergent.

**NOTICE**
- **If sludge sticks hard to the inside of the nozzle seat, remove it with brush and a detergent.**
- **It is advisable to perform a contact check using red lead primer.**

(2) Make sure that the inside of the nozzle seat is free of sludge or foreign matters.

## MOUNTING THE INJECTOR

**⚠ CAUTION**

- **While working, be careful not to make dirt and water enter parts.**
- **Before mounting parts, make sure that there is no dirt on the connection between them.**
- **Air enters the fuel pipe in the process of mounting the pre fuel filter case. After mounting is completed, thoroughly purge air from the fuel pipe.**

### 1. MOUNTING THE INJECTOR AND THE INJECTION PIPE

(1) Apply engine oil to a new O-ring and mount it to the injector. Then temporarily fit the injector clamp and injector at the same time.

**⚠ CAUTION**

- **Apply engine oil to the O-ring. Use care not to get the O-ring jammed when inserting it.**
- **Note that if the O-ring is damaged, fuel will leak out and the engine will fail to start to run.**
- **Do not fix the injector clamp until the injection pipe is fit temporarily.**

(2) Slip a new injection pipe oil seal on the injector, and mount the plate with the bolts (2 pcs.) that secured it.

**⚠ CAUTION**

**Mount the injection pipe oil seal so that excessive force will not be applied to the injection nozzle. (If the injection pipe oil seal and the injection nozzle are out of position, oil leakage or improper assembly of the injection pipe will result.)**

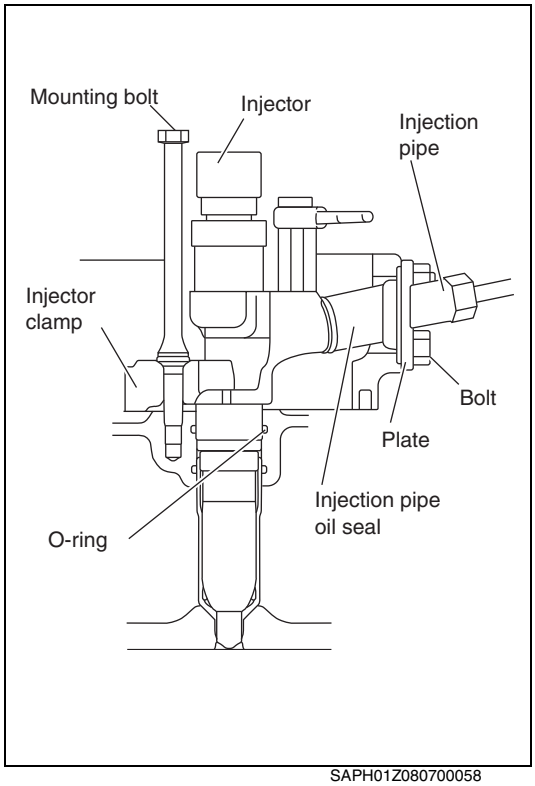


SAPH01Z080700058

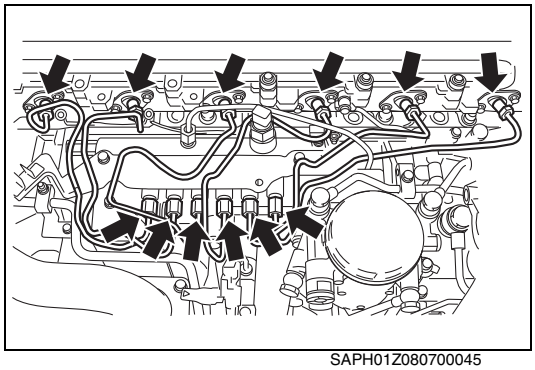

SAPH01Z080700045

(3) Temporarily mount new injection pipes (6 pcs.) on the injector and the common rail.

**⚠ CAUTION**

- **Do not fail to replace the injection pipes with new ones because they are subjected to high pressure and may cause fuel leakage.**
- **Fuel will leak out if the injection pipes are not properly connected. Follow the procedure.**
- **Fuel leakage will cause damage to the engine.**

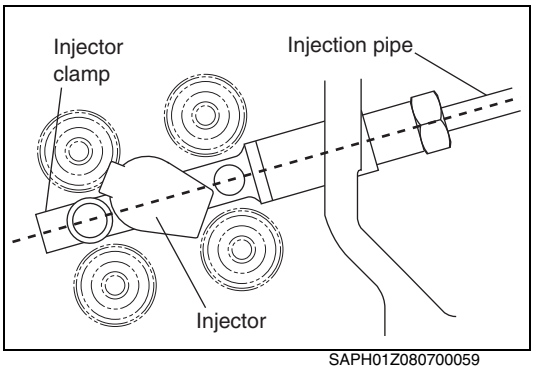

SAPH01Z080700059

- **Arrange the injector and the injection pipes in a straight line.**

**NOTICE**
**Mount the injection pipes so that the flare tightening nuts of the injection pipes will be arranged in the order of the numbers engraved on the nuts shown in the figure below.**

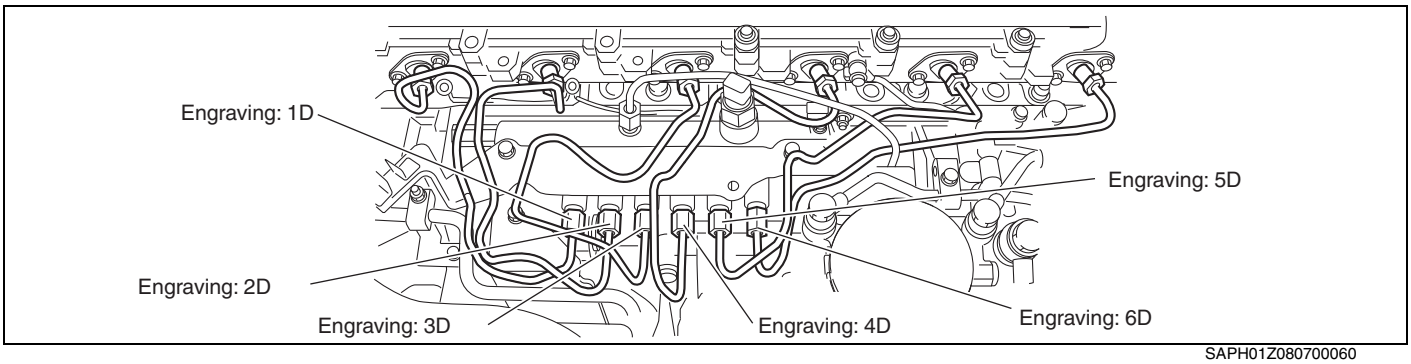

SAPH01Z080700060

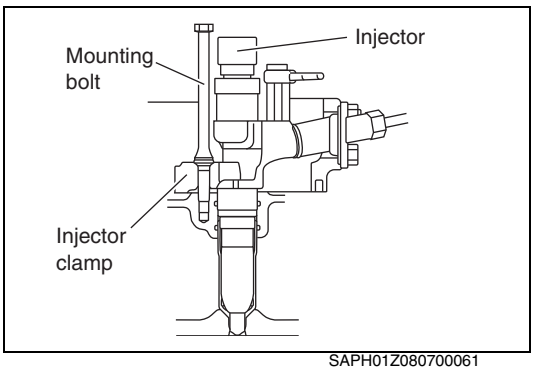

SAPH01Z080700061

(4) Tighten the injector clamp mounting bolt.
**Tightening Torque:**
**25 N·m {250 kgf·cm, 18 lbf·ft}**

**⚠ CAUTION**

- **Insufficient tightening will cause gas leakage, which will result in the seizure of the nozzle.**
- **Before reusing the injector clamp bolt, be sure to apply oil to its washer and thread.**
- **Use the torque wrench to tighten the bolt with the specified torque.**

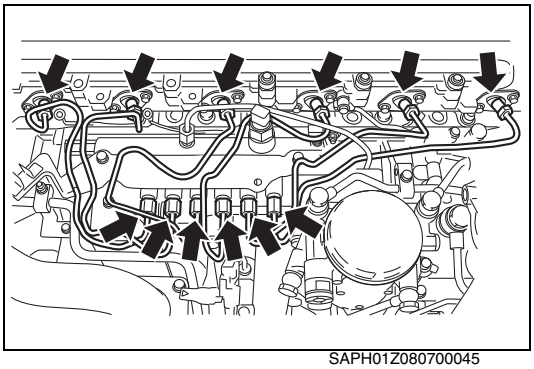
SAPH01Z080700045

(5) Tighten the injection pipe to the specified torque.

**Tightening Torque:**
**44 N·m {450 kgf·cm, 32.5 lbf·ft}**

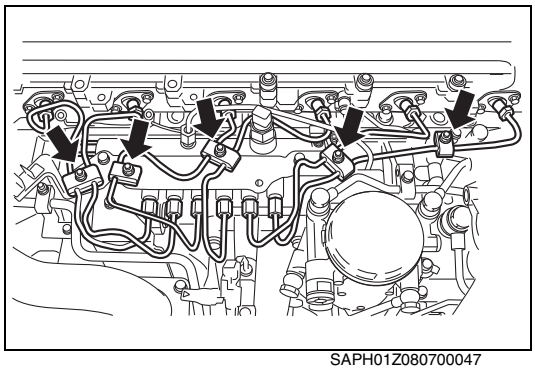
SAPH01Z080700047

(6) Mount the clips with the nuts (5 pcs.), and fix the injection pipes.

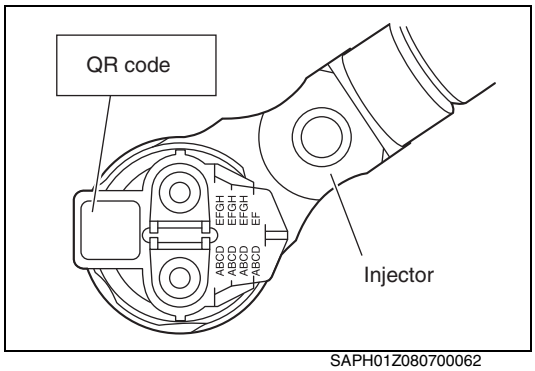

SAPH01Z080700062

## 2. WRITING A INJECTOR COMPENSATION VALUE TO THE ENGINE ECU (WRITING BY MEANS OF RE-PROGRAMMING)

**⚠ CAUTION**

- **If an injector is replaced, write an injector compensation value (QR code) indicated on a new injector in the engine ECU.**
- **Writing an incorrect compensation value may cause engine troubles.**

**NOTICE**

**Injector compensation value can be written by means of a combined use of the PC tool and QR code reader.**

(1) Read the QR code of the injector by using the scanner of the QR code reader to create a compensation data file.
(2) Write the injector compensation value in the engine ECU from a computer.

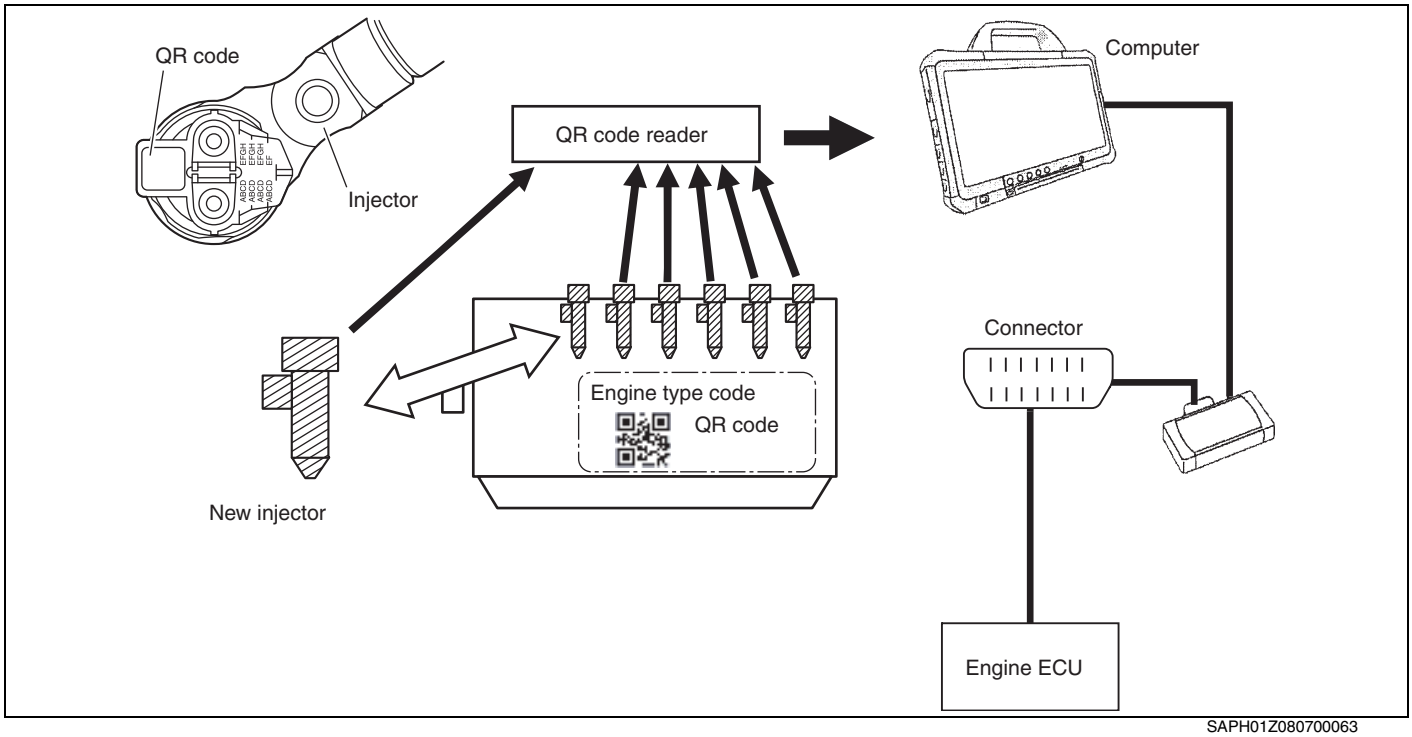

SAPH01Z080700063

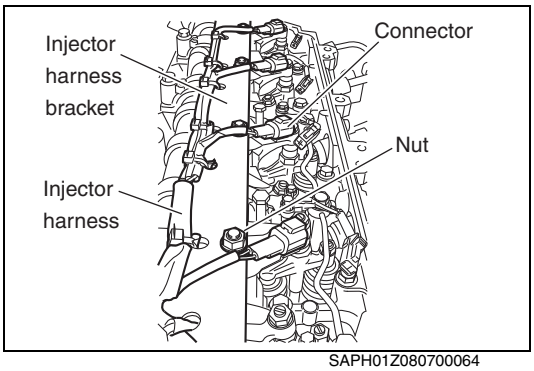

SAPH01Z080700064

### 3. MOUNTING THE INJECTOR HARNESS

(1) Mount the injector harness together with the injector bracket with the bolts (7 pcs.) that secured them.

(2) Connect each connector of the injector harness.

**⚠ CAUTION**

**Before connecting the connectors, make sure that the terminals are free of a spark mark.**

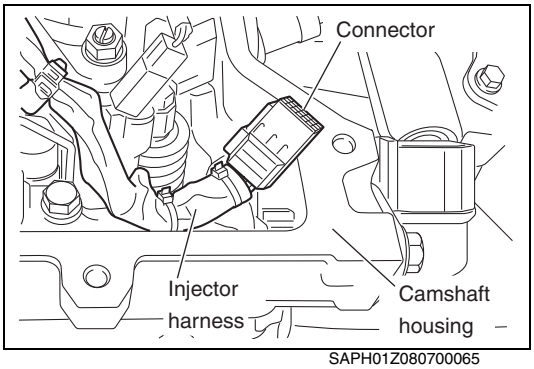

SAPH01Z080700065

**NOTICE**

**It is easy to connect the connectors by first connecting the one to the camshaft housing.**

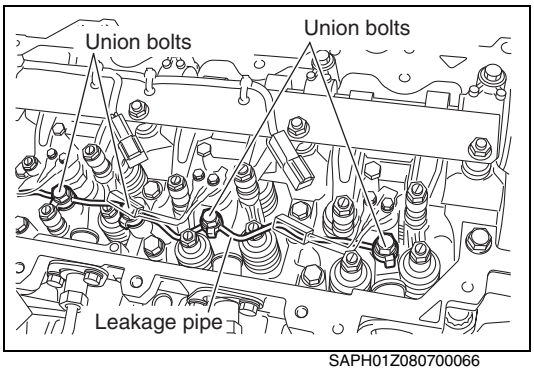

SAPH01Z080700066

### 4. MOUNTING THE LEAKAGE PIPE

(1) Remove dirt or foreign matters from the gasket mounting surface.

(2) Replace the gasket with a new one, and mount the leakage pipe on the injector and the camshaft housing with the union bolts (7 pcs.) that fastened them.
**Tightening Torque:**
**13.5 N·m {138 kgf·cm, 10 lbf·ft}**

**⚠ CAUTION**

- **Do not reuse the old gasket.**
- **The leakage pipe can be twisted easily. Use care in handling.**
- **Note that the thread pitch is different between the union bolts (6 pcs.) for the injector and the union bolt for the camshaft housing.**

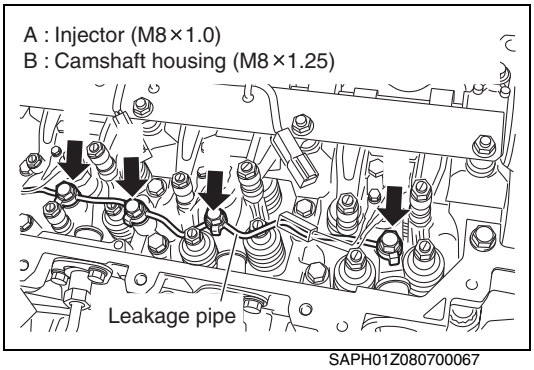

SAPH01Z080700067

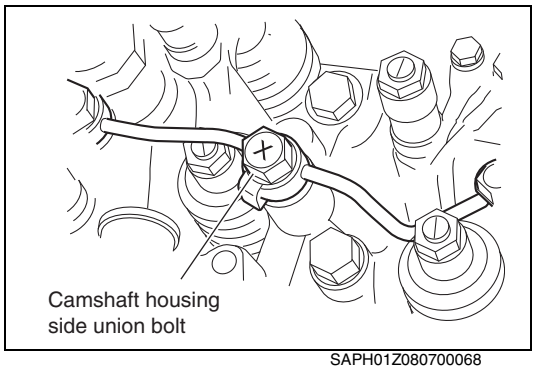


SAPH01Z080700068

- **An "X" mark is put on the union bolt for the camshaft housing.**

**5. MOUNTING THE HEAD COVER**

(1) Mount the head cover.
Refer to the chapter **"ENGINE MECHANICAL"**

**6. AIR BLEEDING OF FUEL SYSTEM**

(1) Perform air bleeding.
Refer to the chapter **"AIR BLEEDING"**

# PRE FUEL FILTER

## DESCRIPTION

EN01Z0807J100005

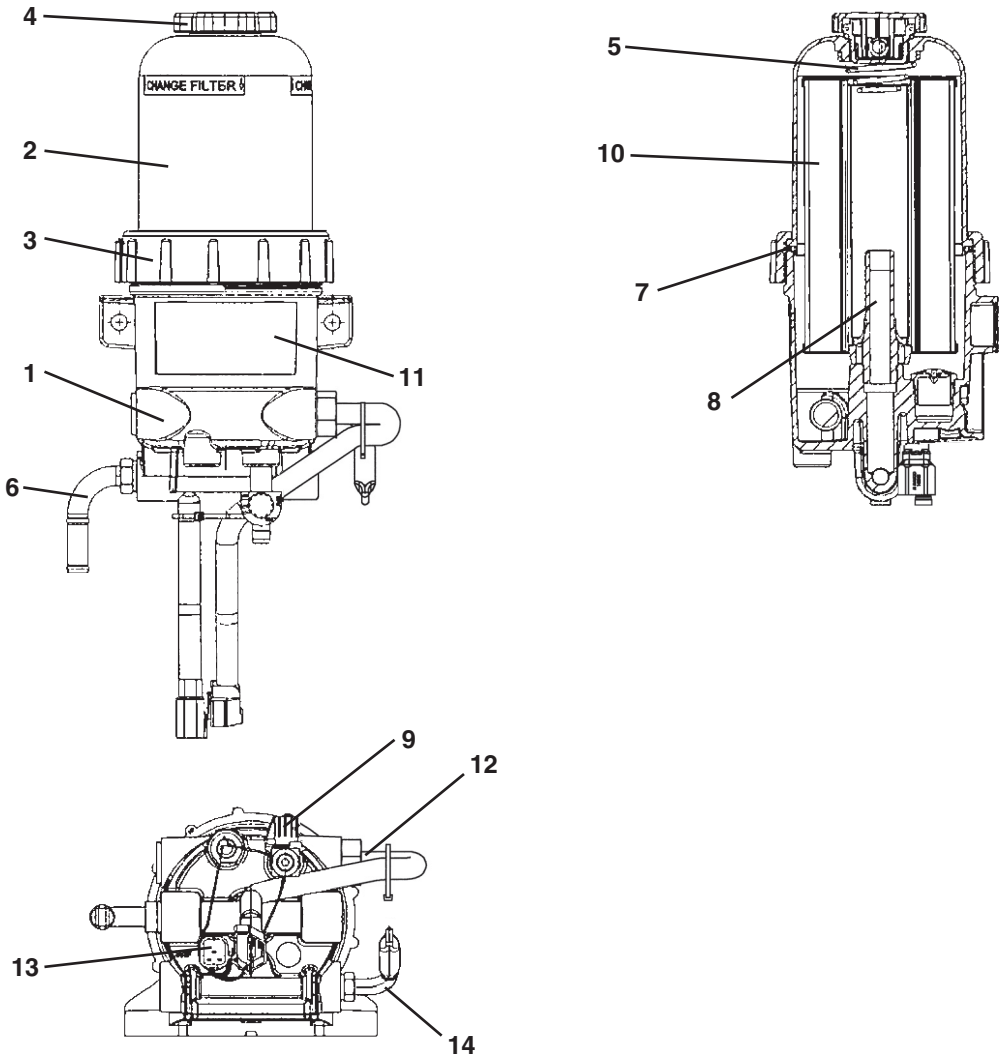


SAPH01Z080700069

| | | | |
|---|---|---|---|
| 1 | Body | 8 | Stud |
| 2 | Cover | 9 | Drain valve |
| 3 | Collar | 10 | Filter |
| 4 | Vent cap | 11 | Label |
| 5 | Spring | 12 | Heater |
| 6 | Fuel pipe (Out) | 13 | Water level sensor |
| 7 | Seal | 14 | Fuel pipe (in) |

# AIR BLEEDING

EN01Z0807H200004

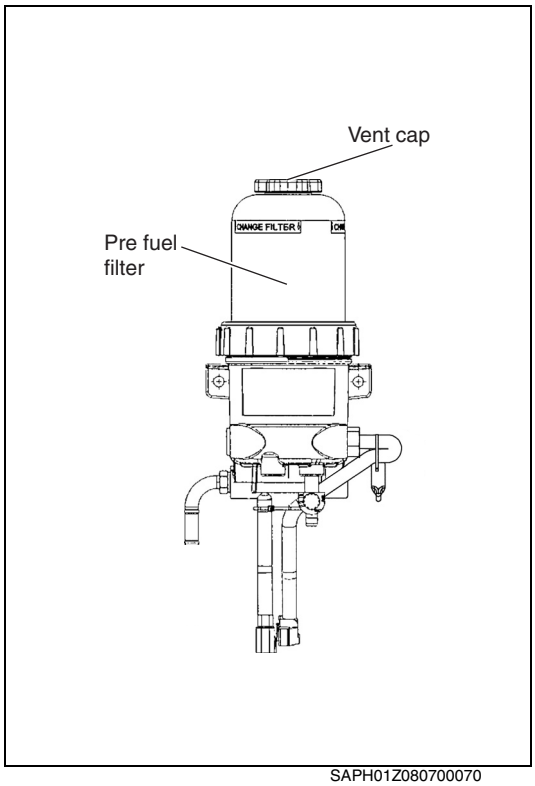


SAPH01Z080700070

**1. AIR BLEEDING**

(1) Remove the vent cap from the top of the cover by turning the vent cap counterclockwise. Fill the cover full of clean fuel. Reinstall the cap and tighten.

(2) Start the engine. When the lubrication system reaches its normal operating pressure, increase engine speed to high for 2 to 3 minutes.

(3) After the air is purged, and the engine is running, loosen the vent cap. When the fuel level fills to following position, quickly tighten the vent cap. Tighten the vent cap until the vent cap run idle with click sounds.
**Fuel level:**
**12.7-38 mm {0.5-1.5 in.}** Above top of collar.

**NOTICE**

- **Thoroughly wipe off any spilled fuel.**
- **Start the engine and check the fuel system for leaks.**

**⚠ WARNING**

- **Always drain the fuel into a container and dispose of it properly. Be careful not to spill any of the fuel.**
- **If fuel is spilled on engine parts, wipe it off entirely. It is dangerous since it can cause a fire which can result in serious personal injury or death.**
- **Do not smoke when performing maintenance on the fuel system.**
- **Keep flame and heat away from the fuel system since the fuel is flammable and can cause a fire resulting in serious personal injury or death.**
- **Any of these can result in personal injury and/or property damage due to fire.**
- **Use the designated special tool and pre fuel filter wrench to tighten the pre fuel filter. Use of an ordinary tool (for example, chain-type tool) can scratch or dent the peripheral surface of the pre fuel filter. If the pre fuel filter is damaged, it can cause fuel to leak, thus resulting in a fire or other serious accidents and can result in serious personal injury or death.**
- **After replacing the filter, inspect the external surface of the pre fuel filter for checking scratches and dents. It is dangerous to use a scratched or dented pre fuel filter, since it can cause fuel to leak and lead to a fire or other serious accidents and can result in serious personal injury or death.**
- **After replacement of the element, operate the engine for trial to check to see if there is any fuel leakage around the pre fuel filter. Fuel leakage can cause a fire and can result in serious personal injury or death.**

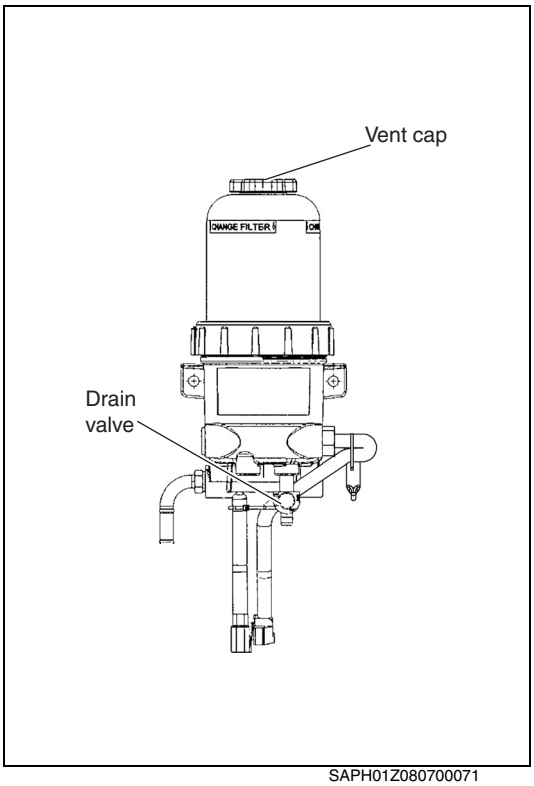

SAPH01Z080700071

**2. DRAIN WATER**

(1) Connect specific tube to drain outlet.
To protect steering joint by draining liquids. Specific tube is available at HINO dealer. (Part No. SZ950-61502)

(2) Loose the vent cap and after open drain valve.
(3) Collect water in to cup.
(4) Allow any water to drain out, then close the drain valve and vent cap. (Drain minimum amount of fuel possible)

# FUEL FILTER

## DESCRIPTION

EN01Z0807J100006

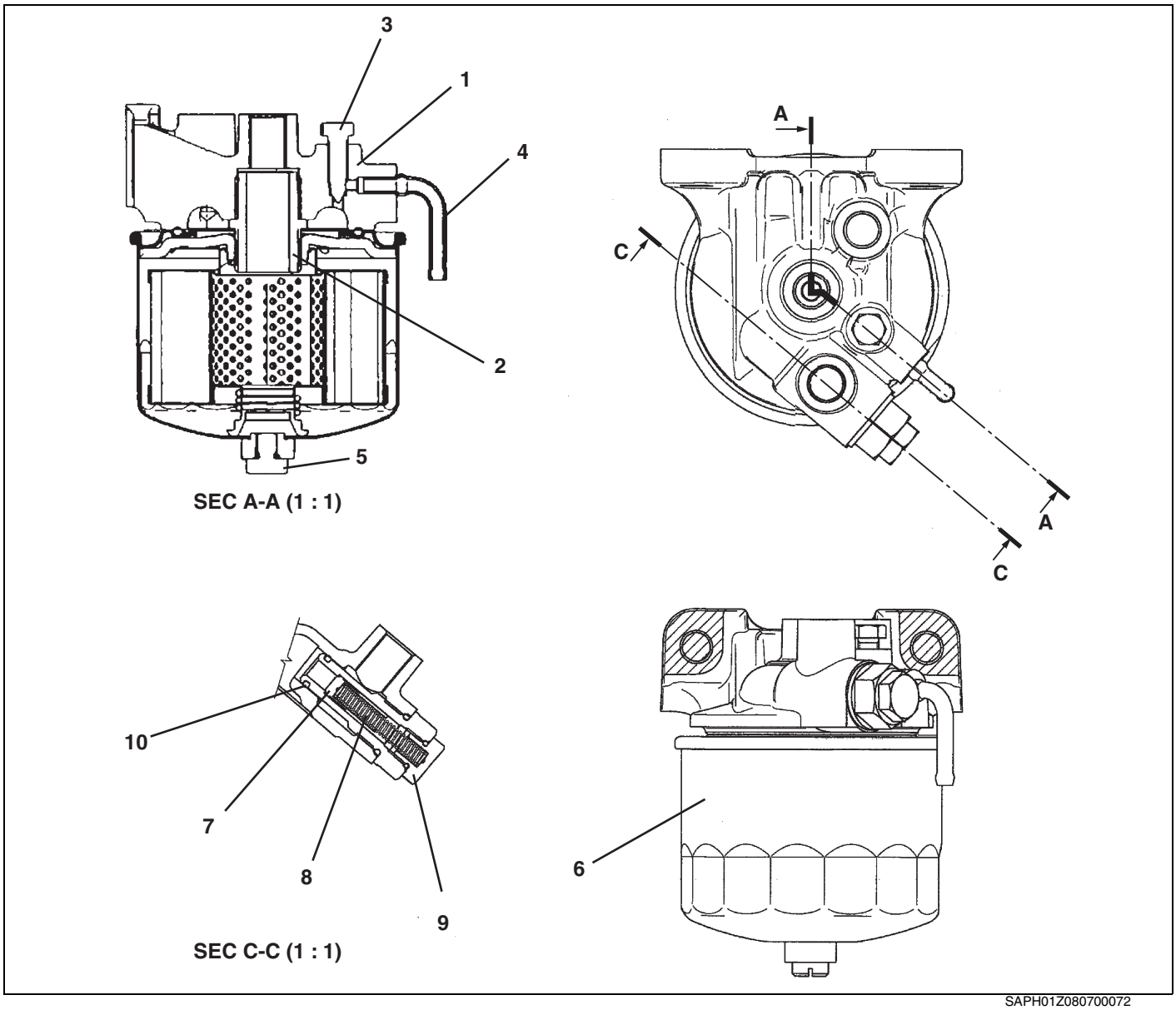


SAPH01Z080700072

| | | | |
|---|---|---|---|
| 1 | Body | 6 | Cartridge |
| 2 | Insert | 7 | Valve |
| 3 | Air bleeder plug | 8 | Spring |
| 4 | Pipe | 9 | Plug |
| 5 | Drain plug | 10 | O-ring |

# OVERHAUL

EN01Z0807H200005

## REPLACING THE ELEMENT

**NOTICE**

- **Take care that no dirt or water gets onto the components during the work.**
- **When re-installing the parts, make sure that the contact surfaces between the parts are free of dirt.**
- **As air enters the fuel piping during the work, air venting must be performed after completion of the work.**
- **Use a genuine Hino fuel filter element.**

**1. FUEL DISCHARGE**

(1) Place a container for receiving the discharged fuel under the drain plug.

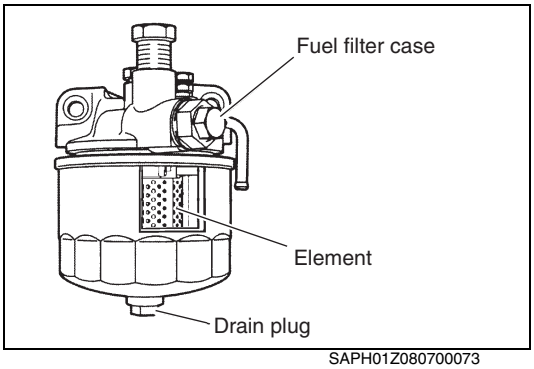

SAPH01Z080700073

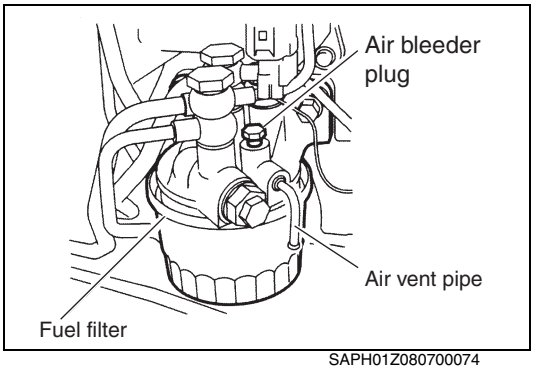

SAPH01Z080700074

(2) Remove the drain plug, loosen the air bleeder plug, and discharge the fuel and water collected in the fuel filter.

**NOTICE**

**If the fuel is to be disposed of, observe the local disposal regulations.**

**2. REMOVING THE ELEMENT**

(1) Use the special tool to remove the element from the fuel filter case.

**SST: Filter wrench (S0955-31010)**

**NOTICE**

- **Confirm that the O-ring on the fuel filter case side has been removed.**
- **Remove dirt from the mounting surface for the O-ring.**
- **Do not reuse an O-ring.**
  **Reference: Prepare a container and a shop towel as fuel will spill when the element is replaced.**

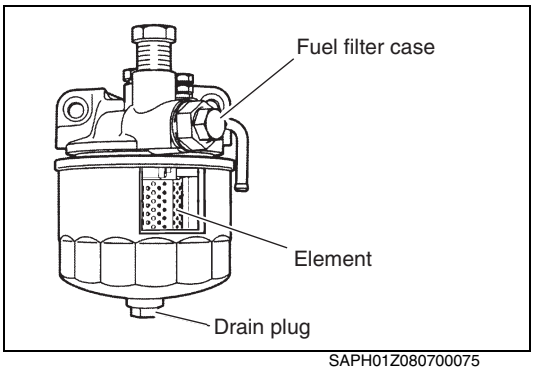

SAPH01Z080700075

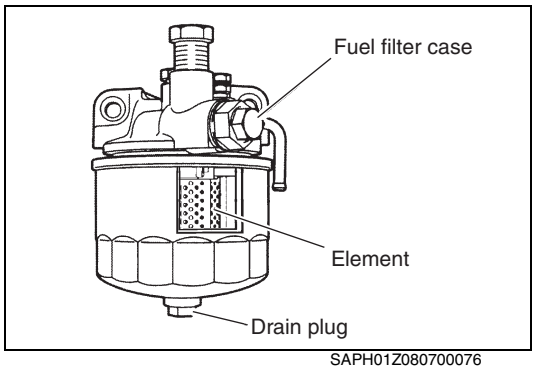

SAPH01Z080700076

**3. ELEMENT INSTALLATION**

(1) Remove dirt from the mounting surface for the element on the inside of the fuel filter case.

(2) Install the new element after applying fuel to the surface of the O-ring, and then tighten by hand until there is contact with the seal surface of the fuel filter case.

**NOTICE**

- **Do not reuse the element.**
- **Take care that the O-ring does not become twisted and damaged.**

(3) Use the special tool and tighten the element for another 2/3 of a turn.
**SST: Filter wrench (S0955-31010)**

**NOTICE**

- **Take care that the O-ring does not become twisted and damaged.**
- **After completion of the work, wipe up any spilled water or fuel; after starting the engine, confirm that there is no fuel leakage.**

**4. BLEEDING AIR FROM THE FUEL SYSTEM**
**Refer to chapter "AIR BLEEDING"**

## REMOVING THE FUEL FILTER

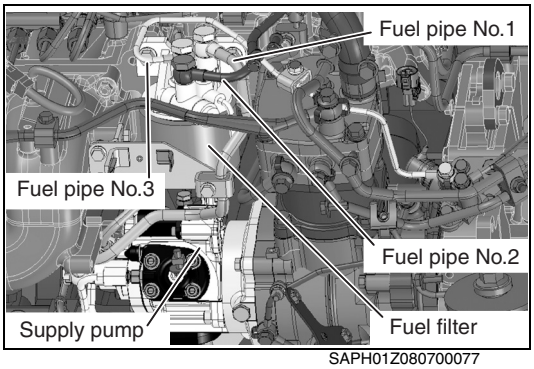

SAPH01Z080700077

**1. DISCONNECT THE FUEL PIPE**

(1) Disconnect the 3 union bolts then disconnect the 5 gaskets and remove the No.4 fuel pipe and No.1 return pipe.

**NOTICE**

**When the fuel hose is disconnected, as fuel falls, prepare the container and rag.**

(2) Remove the fuel pipe No.2.

(3) Remove the fuel pipe No.3.

**2. REMOVE THE FUEL FILTER**

(1) Remove 2 bolt and fuel filter assembly from the fuel filter bracket.

## MOUNTING THE FUEL FILTER

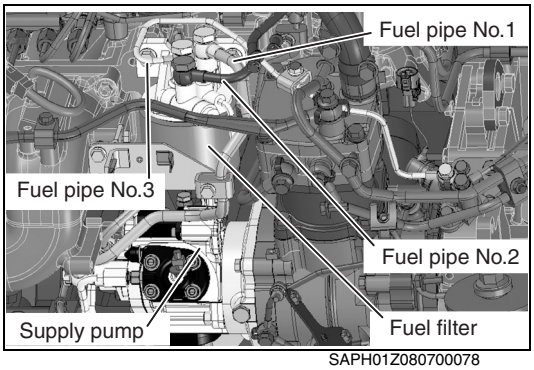

SAPH01Z080700078

**1. MOUNTING THE FUEL FILTER**

(1) Mount 2 bolt and fuel filter assembly from the fuel filter bracket.
**Tightening Torque:**
**55 N·m {560 kgf·cm, 41 lbf·ft}**

**2. CONNECTING THE FUEL PIPE**

(1) Mount the fuel pipe No.3.
**Tightening Torque:**
**24.5 N·m {250 kgf·cm, 18.1 lbf·ft}**

(2) Mount the fuel pipe No.2.
**Tightening Torque:**
**24.5 N·m {250 kgf·cm, 18.1 lbf·ft}**

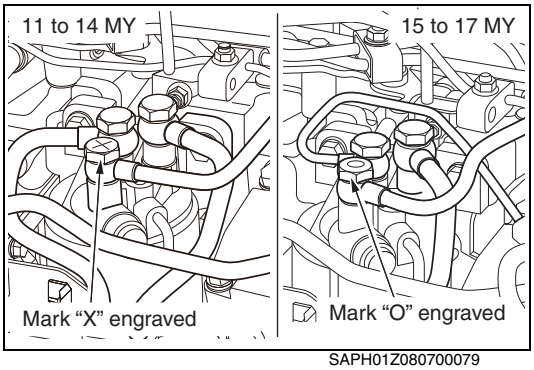

SAPH01Z080700079

**NOTICE**

- **Do not use a power tool.**
- **For fuel pipe No.1 and No.3, use M14 x 1.5 union bolt (Banjo bolt) without any engraved marking.**
- **For fuel pipe No.2, use M14 x 1.0 union bolt (Banjo bolt) with engraved “X” marking. (11 to 14 MY)**
- **For fuel pipe No.2, use M14 x 1.0 union bolt (Banjo bolt) with engraved “O” marking. (15 to 17 MY)**

(3) Mount the 3 union bolts then disconnect the 5 gaskets and remove the No.4 fuel pipe and No.1 return pipe.
**Tightening Torque:**
**24.5 N·m {250 kgf·cm, 18.1 lbf·ft}**

**NOTICE**

**When the fuel hose is disconnected, as fuel falls, prepare the container and rag.**

# FUEL TANK

## COMPONENT LOCATOR

EN01Z0807J100007

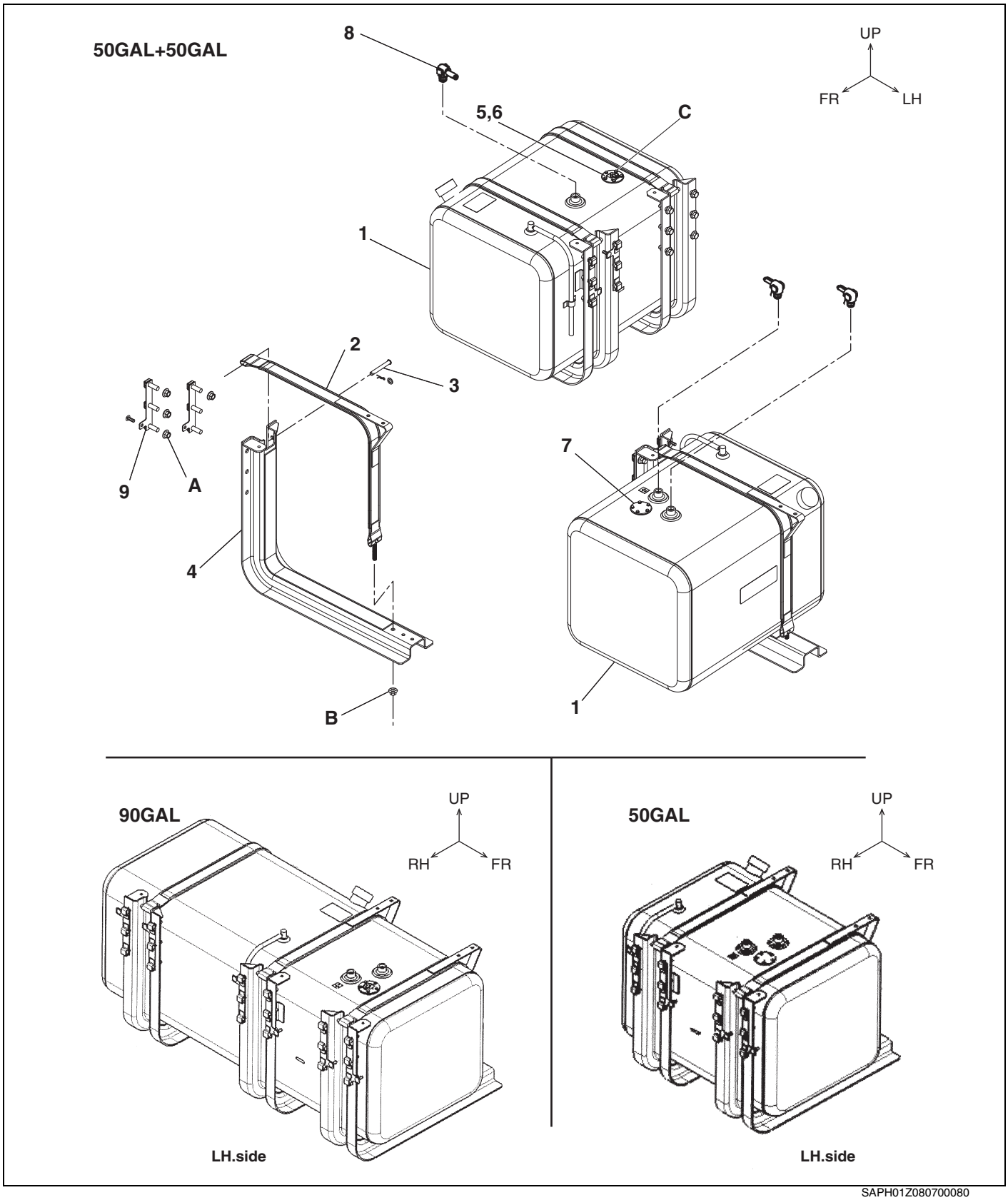


SAPH01Z080700080

| | | | |
|---|---|---|---|
| 1 | Fuel tank | 6 | Gasket |
| 2 | Fuel tank band | 7 | Plug |
| 3 | Pin | 8 | Joint |
| 4 | Fuel tank support | 9 | Plate, fuel tank set |
| 5 | Fuel sender | | |

**Tightening torque** **Unit: N·m {kgf·cm, lbf·ft}**

| | | | |
|---|---|---|---|
| A | 91.2-136.8 {930-1,396, 67-100} | C | 0.5-0.7 {5-7, 0.362-0.506} |
| B | 23-29 {234.5-296, 17-21.4}* | | |

***: Nonreusable. Be sure to use new parts.**

# FUEL CUTOFF VALVE

## COMPONENT LOCATOR

EN01Z0807J100008

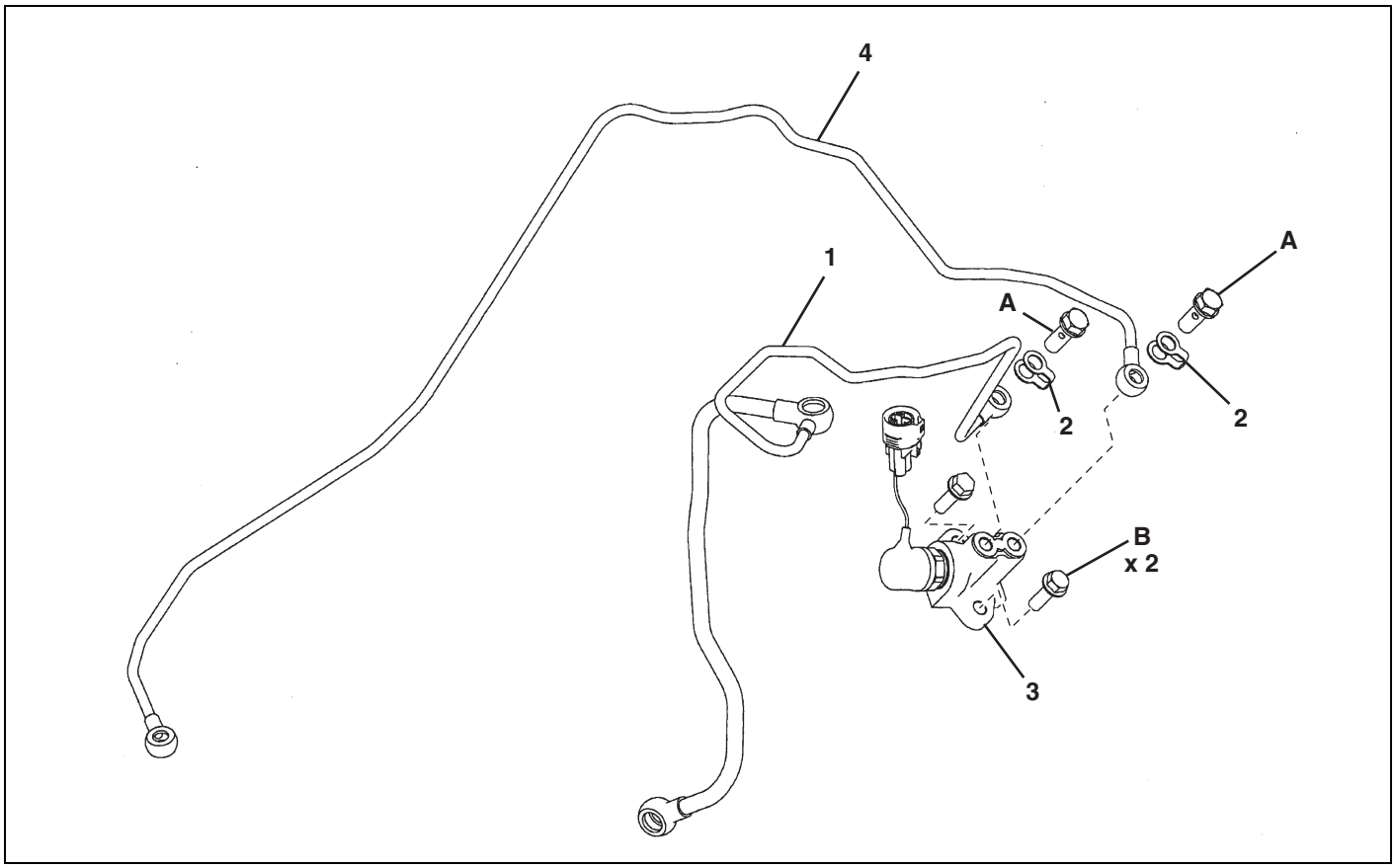


SAPH01Z080700081

| | | | |
|---|---|---|---|
| 1 | Fuel feed pipe No.3 | 3 | Fuel cutoff valve |
| 2 | Gasket * | 4 | Fuel feed pipe No.5 |

*: Nonreusable. Be sure to use new parts.

Tightening torque Unit: N·m {kgf·cm, lbf·ft}

| | | | |
|---|---|---|---|
| A | 19.6 {200, 14.5} | B | 28.5 {290, 21.0} |

# OVERHAUL

EN01Z0807H200006

## IMPORTANT POINT DISASSEMBLY

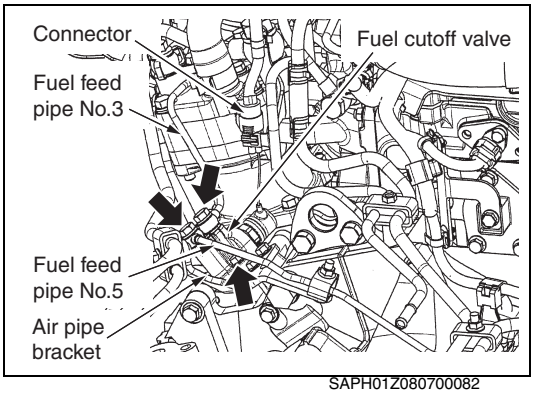

SAPH01Z080700082

**1. DISCONNECTING THE HARNESS**

(1) Disconnect the connector from the fuel cutoff valve.

**2. DISCONNECTING PIPES**

(1) Unfasten the 2 union bolts to disconnect the fuel feed pipe No.3, fuel feed pipe No.5, and 2 gaskets from the fuel cutoff valve.

**NOTICE**

**Prepare the reservoir and waste to collect dripping fuel when disconnecting the pipe.**

**3. REMOVING THE FUEL CUTOFF VALVE**

(1) Unfasten the bolts (2 pcs.) to remove the fuel cutoff valve from the air pipe bracket.

## IMPORTANT POINTS REPLACEMENT

**1. CAUTIONS**

**⚠ CAUTION**

- **While working, do not allow dirt and water to enter the parts.**
- **Before mounting parts, make sure that there is no dirt on the connection between them.**
- **Air enters the fuel pipe in the process of mounting the pre fuel filter case. After mounting is completed, thoroughly purge air from the fuel pipe.**

**2. MOUNTING THE FUEL CUTOFF VALVE**

(1) Mount the fuel cutoff valve to the air pipe bracket with the bolts (2 pcs.).
**Tightening Torque:**
**28.5 N·m {290 kgf·cm, 21.0 lbf·ft}**

**3. CONNECTING PIPES**

(1) Replace with 2 new gaskets and connect the fuel feed pipe No.3 and fuel feed pipe No.5 to the fuel cutoff valve with 2 union bolts.
**Tightening Torque:**
**19.6 N·m {200 kgf·cm, 14.5 lbf·ft}**

**⚠ CAUTION**
**Before mounting the parts, check the joints for dirt.**

**4. CONNECTING THE HARNESS**

(1) Connect the connector to the fuel cutoff valve.

**5. AIR BLEEDING OF FUEL SYSTEM**
**Reference: FUEL SYSTEM (J08E), PRE FUEL FILTER, AIR BLEEDING**
**(Page 7-31)**

# TURBOCHARGER (J08E)

EN08-001

**TURBOCHARGER..... EN08-2**
DESCRIPTION ..... EN08-2
TROUBLESHOOTING..... EN08-3
REPLACEMENT ..... EN08-12
INSPECTION AFTER MOUNTING..... EN08-18

# TURBOCHARGER

## DESCRIPTION

EN0110608C100001

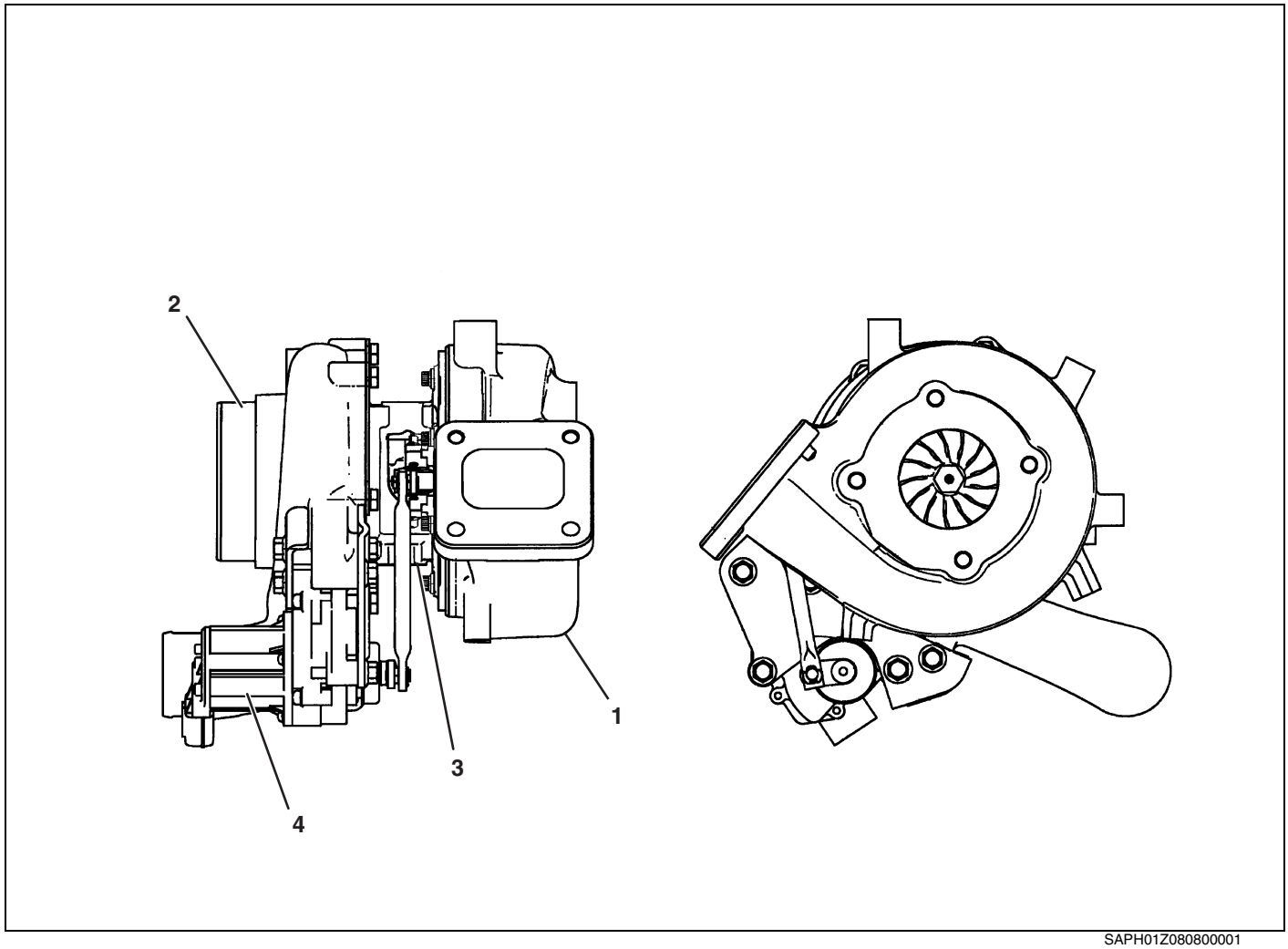


SAPH01Z080800001

| | | | |
|---|---|---|---|
| 1 | Turbine housing | 3 | Center housing and rotating assy |
| 2 | Compressor housing | 4 | Actuator assembly |

**NOTICE**

**This turbocharger should not be disassembled unless by turbocharger manufacture. The turbocharger parts cannot be replaced.**

# TROUBLESHOOTING

EN0110608F300001

**1. Table 1-1 Troubleshooting-Engine Exhaust Lacks Power or Engine Exhaust Emits Black Smoke**

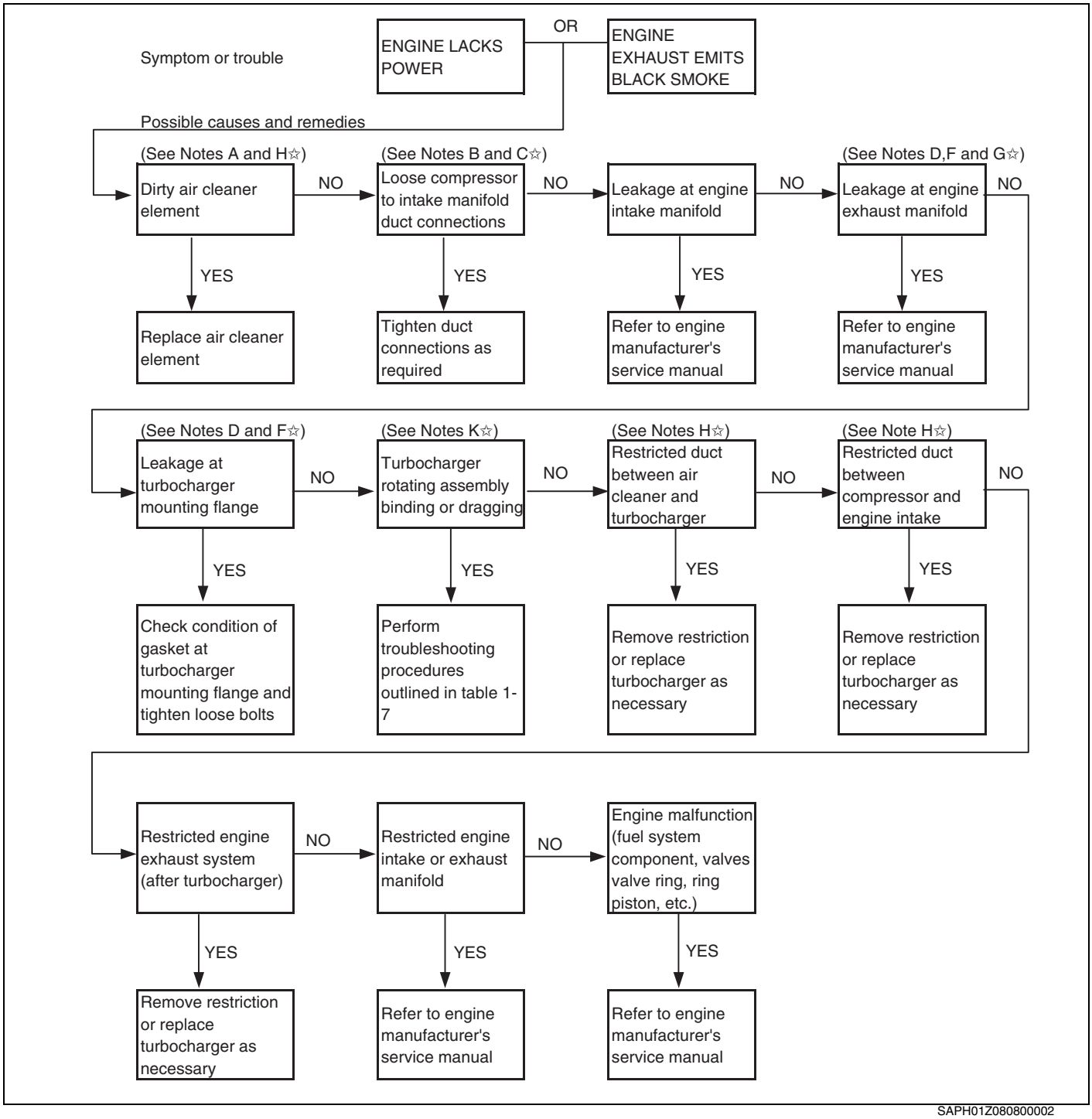


SAPH01Z080800002

☆ **Shown on Table 1-9**

**2. Table 1-2 Troubleshooting Engine Exhaust Emits WHITE or BLUE SMOKE**

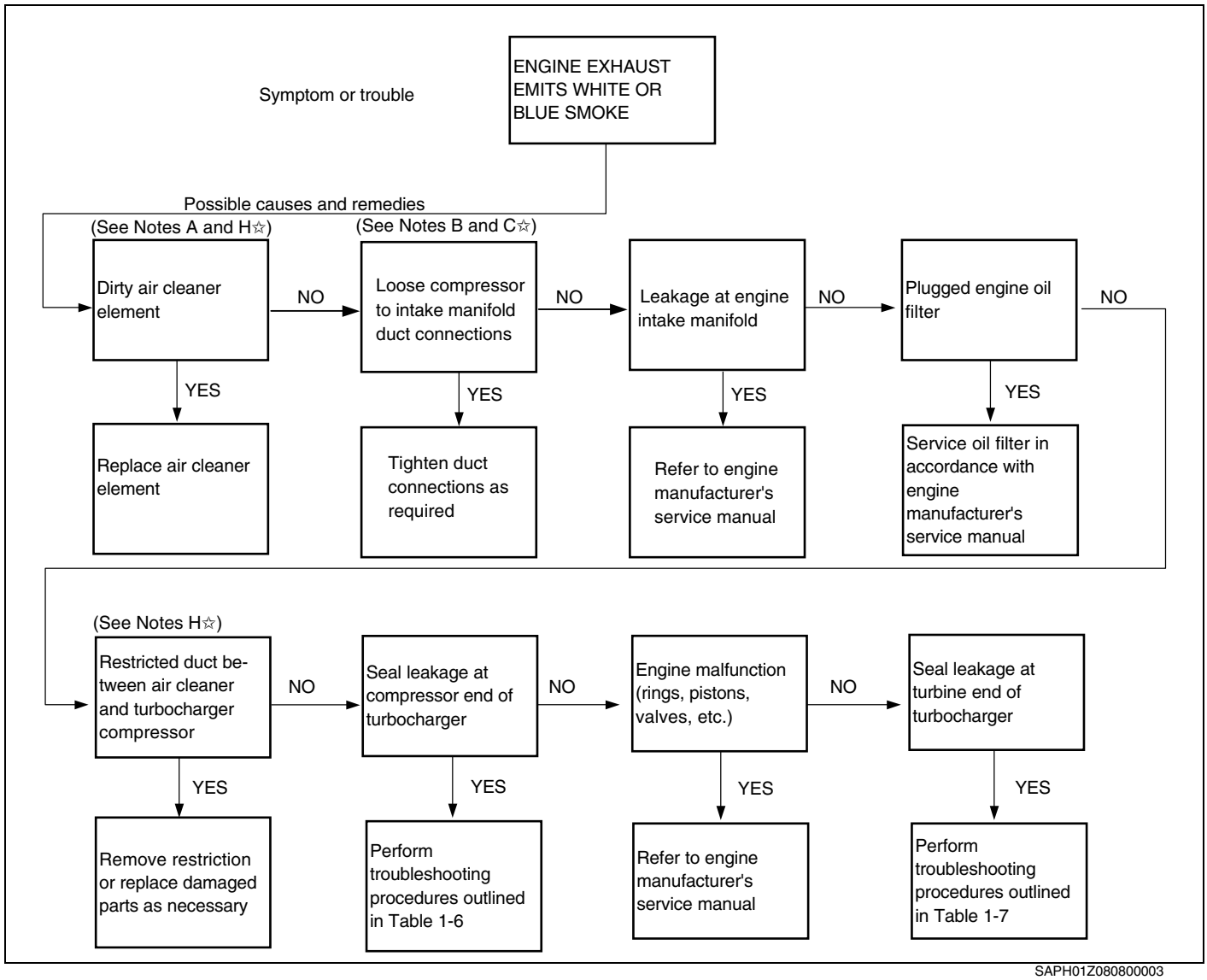


SAPH01Z080800003

☆ **Shown on Table 1-9**

### 3. Table 1-3 Troubleshooting Engine Oil Consumption Excessive

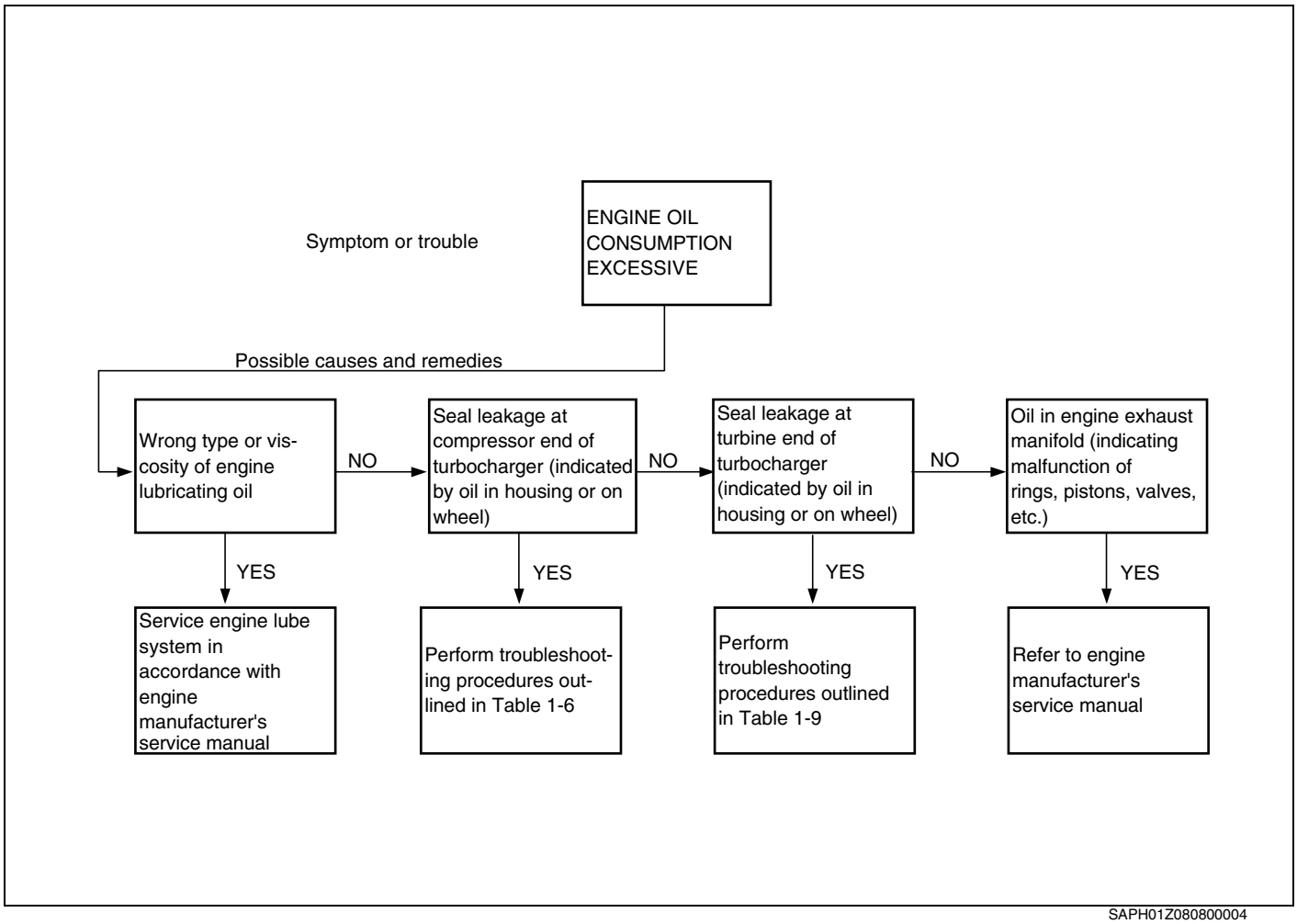


SAPH01Z080800004

**4. Table 1-4 Troubleshooting Noisy Turbocharger**

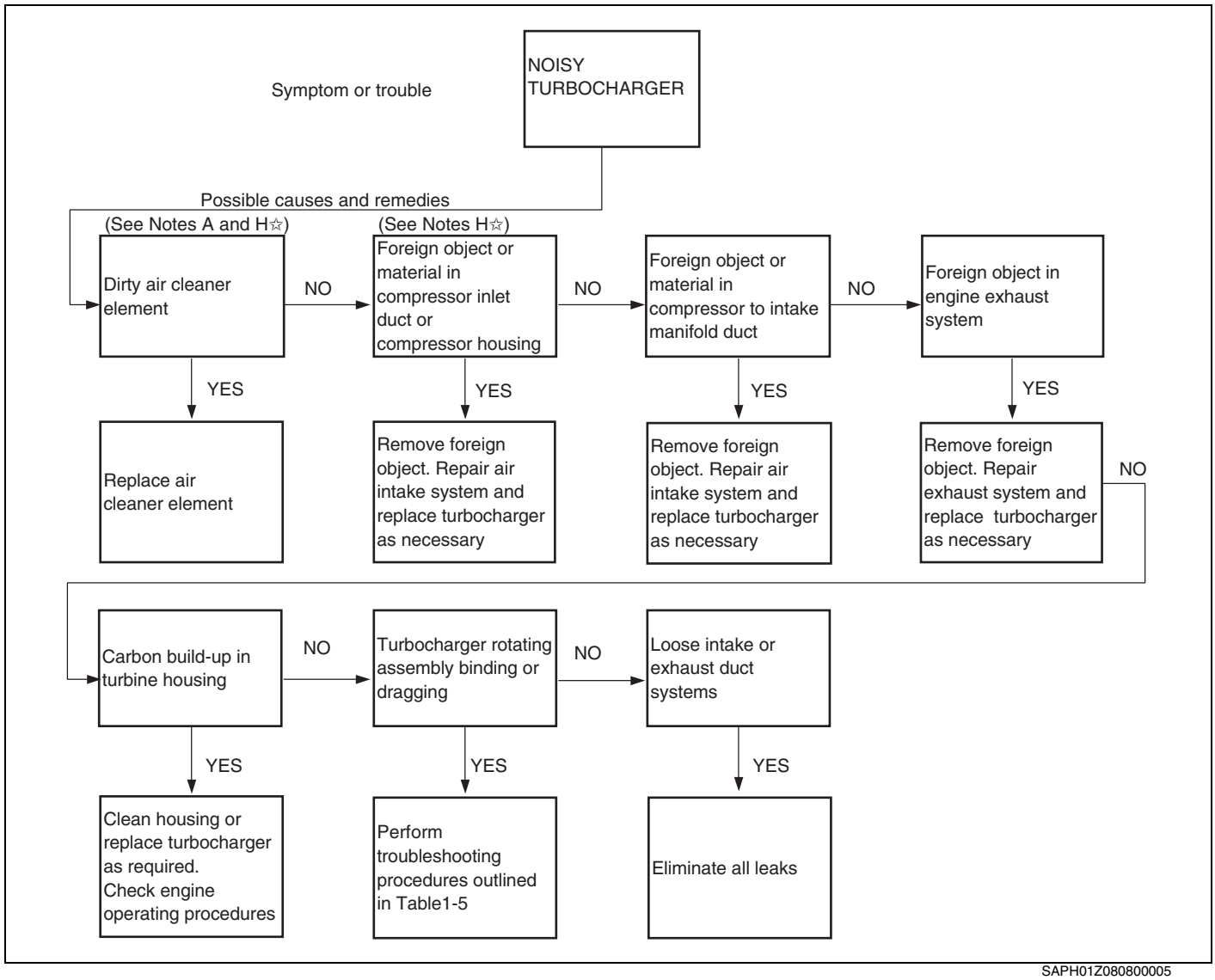


SAPH01Z080800005

☆ **Shown on Table 1-9**

**5. Table 1-5 Troubleshooting Turbocharger Rotating Assembly Binding or Dragging**

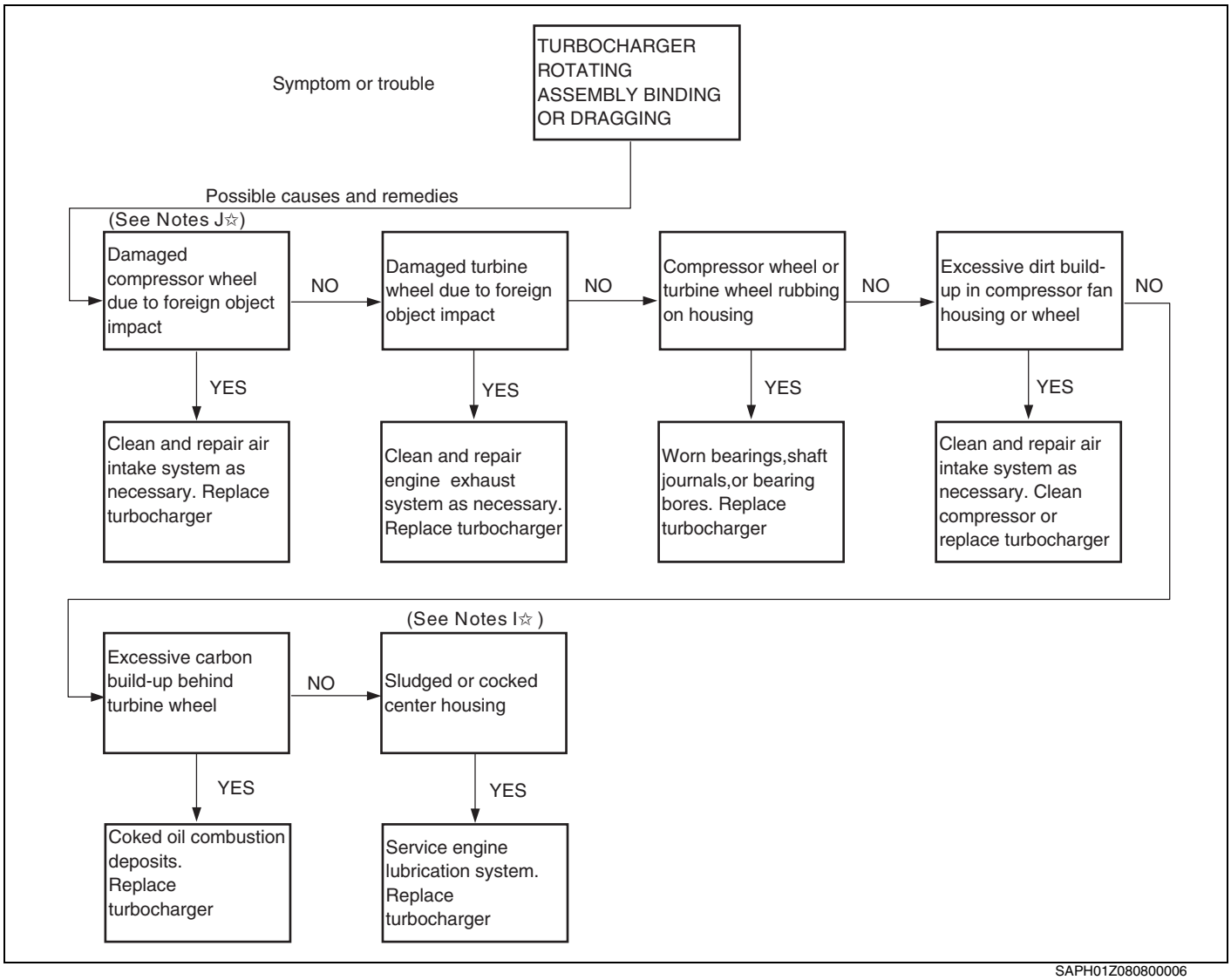


SAPH01Z080800006

☆ **Shown on Table 1-9**

**6. Table 1-6.Troubleshooting-Seal Leakage at Compressor End of Turbocharger**

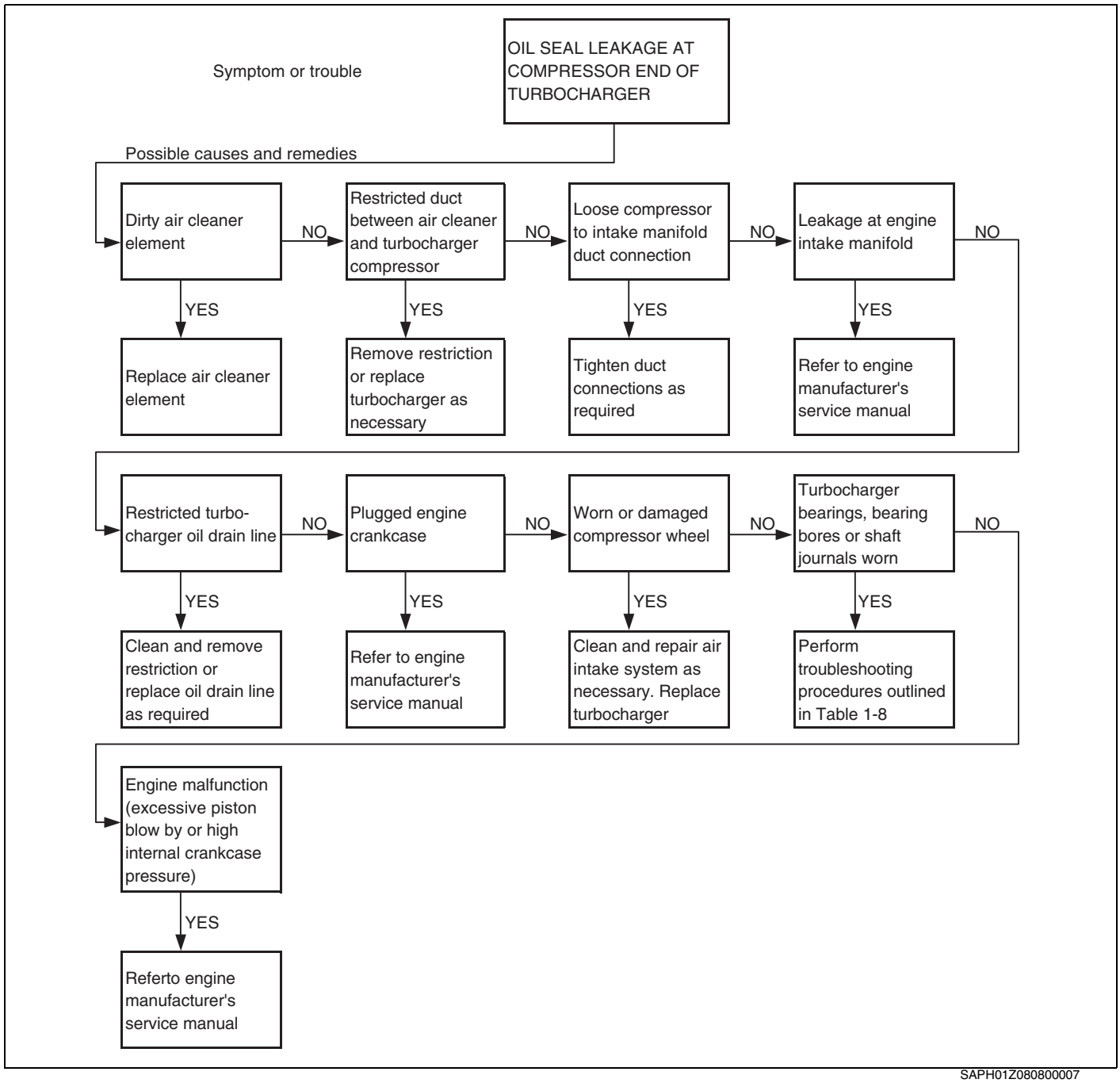


SAPH01Z080800007

**7. Table 1-7.Troubleshooting-Seal Leakage at Turbine End of Turbocharger**

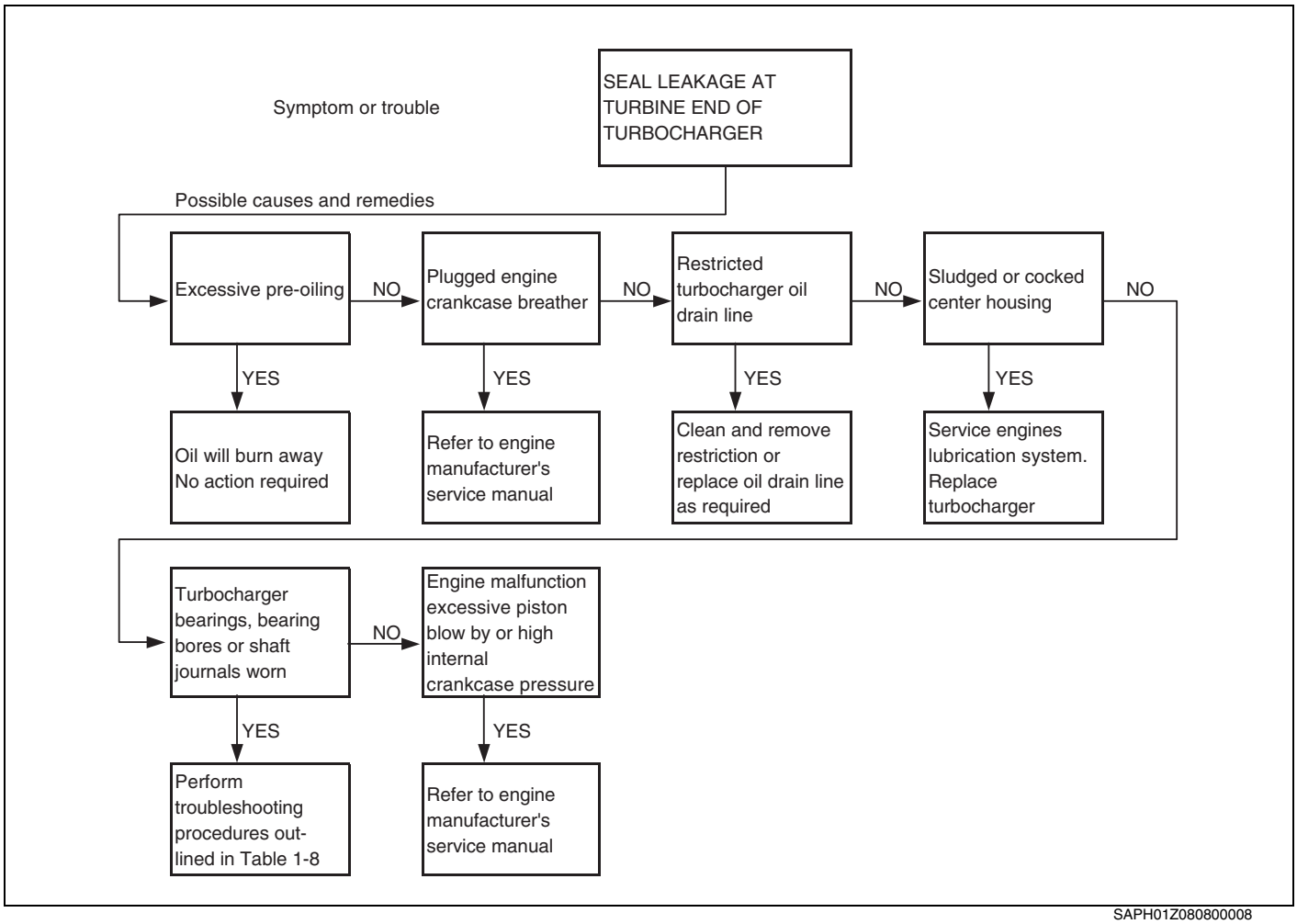


SAPH01Z080800008

**8. Table 1-8.Troubleshooting-Turbocharger Bearings, Bores, or Journals are Worn**

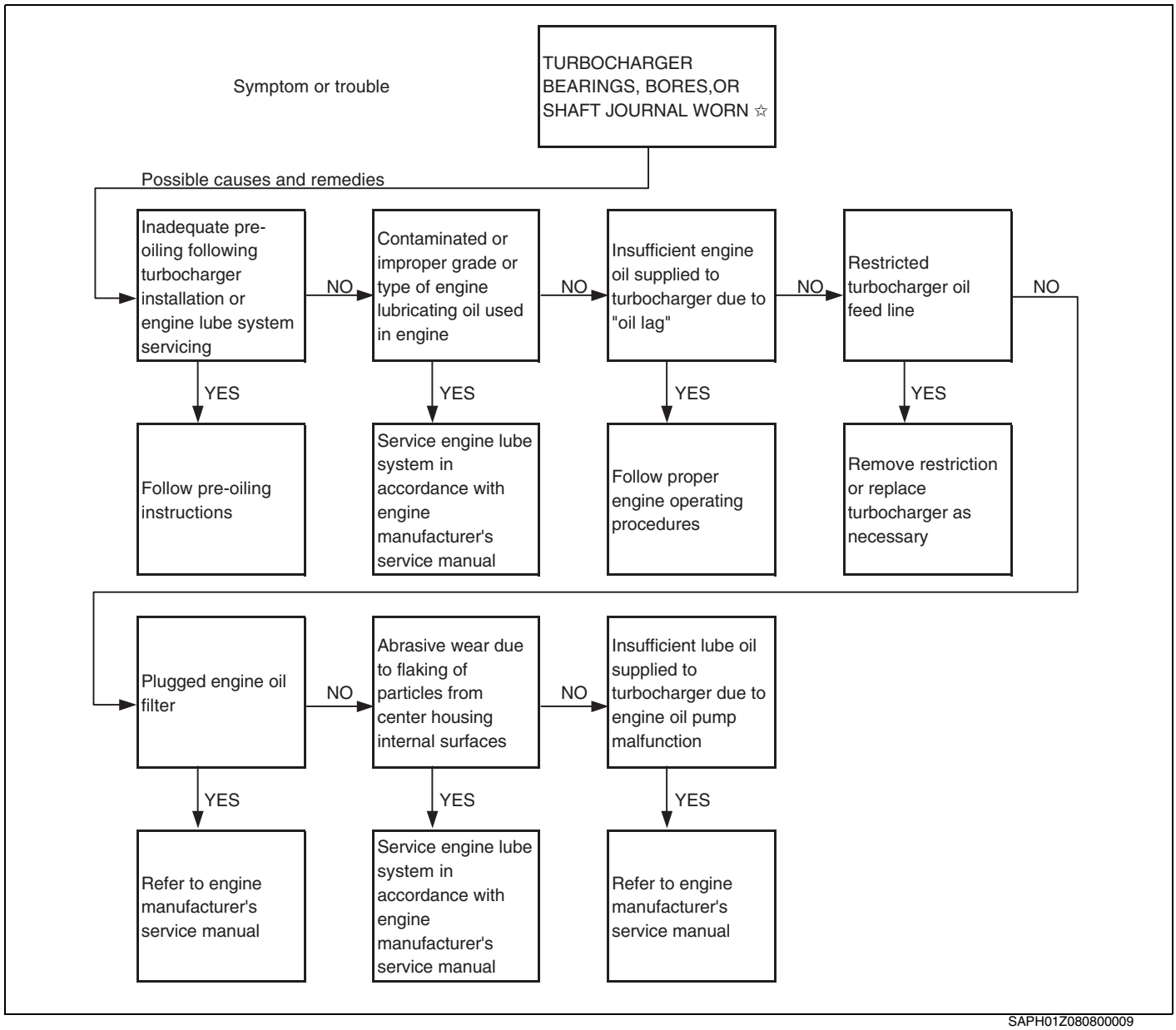


SAPH01Z080800009

☆ **Replace turbocharger, then use this table to determine cause of failure.**

**9. Table 1-9. Troubleshooting Procedures Notes**

| | |
|---|---|
| A | Refer to engine manufacturer's service manual for inspection requirements and replacement specifications. |
| B | With engine stopped, check duct clamping devices for tightness. |
| C | With engine running at idle speed, lightly spray duct connections with starting fluid. Leaks at connections will be indicated by an increase in engine speed due to the starting fluid being drawn into the compressor and pumped into the engine combustion chambers. |
| D | With engine running at idle speed, check duct connections for leaks by applying lightweight oil or liquid soap to areas of possible leakage and checking for bubbles. Exhaust gas leakage between the engine block and the turbocharger inlet will also create a noise level change. |
| E | With engine running at idle speed, check for unusual noise and vibration. If either condition is noted, shut down the engine immediately to protect the turbocharger and engine from further damage. With the engine stopped, check the turbocharger shaft wheel assembly for damage as outlined Note I, below. |
| F | With engine running, a change in the noise level to a higher pitch can indicate air leakage between the air cleaner and the engine or a gas leak between the engine block and the turbocharger inlet. |
| G | Exhaust gas leakage may be indicated by hat discoloration in the area of the leak. |
| H | With the engine running, noise level cycling from one level to another can indicate a plugged air cleaner, a restriction in the air-cleaner to compressor duct, or a heavy build-up of dirt in the compressor housing or on the compressor wheel. |
| I | Internal inspection of the center housing can be accomplished by removing the oil drain line and looking through the oil drain opening. When a slugged or cocked condition exists, a heavy sludge build-up will be seen on the shaft between the bearing journals and in the center housing from the oil drain opening back to the turbine end. |
| J | Thorough cleaning of the air intake system is essential following compressor wheel damage due to foreign object impact. In many cases, metal pieces from the wheel become embedded in the air cleaner element. If the element is not changed, these metal pieces can be drawn into the replacement turbocharger and cause it to fail in the same manner as the original unit. |
| K | With the air inlet and exhaust gas ducting removed from the turbocharger, examine both the compressor and turbine wheels for blade damage. Examine the outer blade tip edges for evidence of rubbing on housing surfaces. |

- Turn the rotating assembly by hand and feel for dragging or binding. Push the rotating assembly side-ways while rotating to feel for wheel rub. If there is any indication of rubbing, perform the bearing clearance inspection procedure. If the rotating assembly rotates freely and there is no evidence of binding or rubbing, it can be assumed that the turbocharger is serviceable.

# REPLACEMENT

## REMOVING THE TURBOCHARGER ASSEMBLY

**NOTICE**

- **Use care not to touch the link rod and adjusting screw.**
- **The link rod the electric actuator has been adjusted. Do not remove it. Removal of the link rod may cause misalignment, resulting in turbocharger functional decline.**
- **The adjusting screw for opening/closing operation of the turbocharger assembly has been adjusted. Do not loosen it.**

**1. DRAINING THE COOLANT**

(1) Drain the coolant.
**Reference: COOLING SYSTEM (J08E)**

**2. DISCONNECTING THE HARNESS**

(1) Disconnect the electric actuator connector.

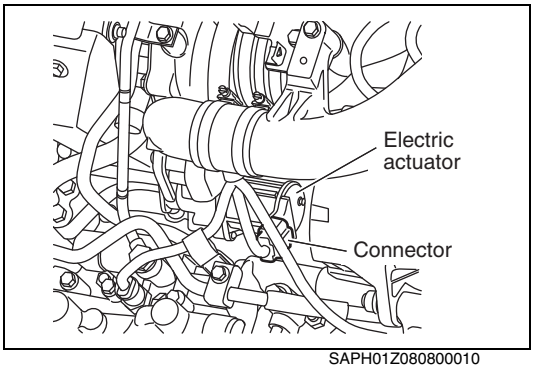

SAPH01Z080800010

**3. REMOVING THE INTAKE PIPE(EXHAUST SIDE)**

(1) Remove the intake pipe (exhaust side).
**Reference: AIR INTAKE SYSTEM (J08E)**

**4. REMOVING THE TURBOCHARGER INSULATOR**

(1) Unfasten the bolts to remove a turbocharger insulator (upper) from a turbocharger assembly.

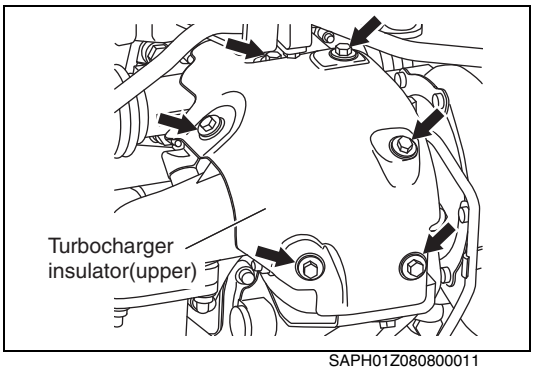

SAPH01Z080800011

(2) Unfasten the bolts to remove the turbocharger insulator (lower) from the turbocharger assembly.

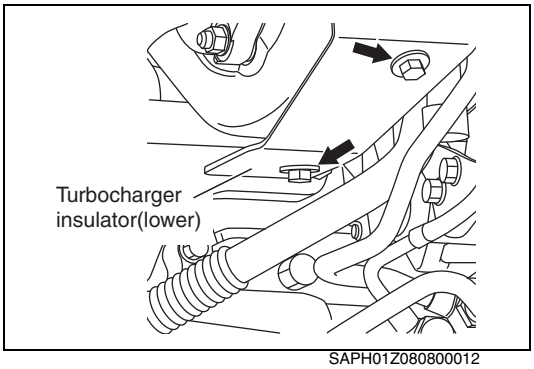

SAPH01Z080800012

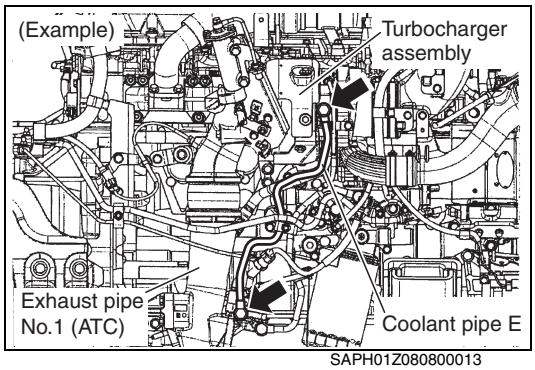

SAPH01Z080800013

**5. DISCONNECTING THE COOLANT PIPE**

(1) Unfasten the union bolts to remove the coolant pipe E and gaskets from turbocharger assembly and exhaust pipe No.1 (ATC).

**NOTICE**
**Use care not to splash the coolant in the pipes and turbocharger assembly.**

**HINT**
**Use a container and a waste cloth to avoid spillage of coolant when disconnecting the coolant pipe.**

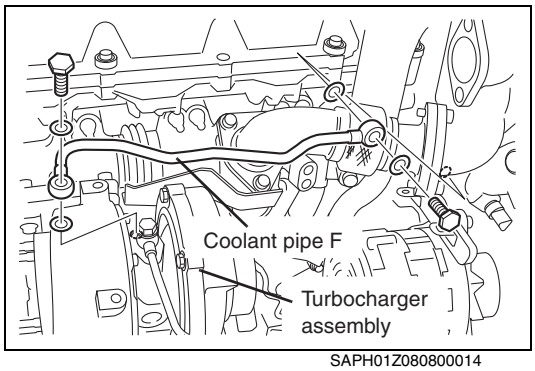

SAPH01Z080800014

(2) Unfasten the union bolts to remove the coolant pipe F and gaskets from the turbocharger assembly.

**NOTICE**
**Use care not to splash the coolant in the pipes and turbocharger assembly.**

**HINT**
**Use a container and a waste cloth to avoid spillage of coolant when disconnecting the coolant pipe.**

(3) Block water holes of the turbocharger assembly to prevent entry of foreign matters.

**⚠ CAUTION**
**Use special care to prevent the entry of foreign matter into the turbocharger assembly.**

**6. REMOVING THE EXHAUST PIPE**

(1) Inspect the turbine shaft play on the exhaust side.
**Reference: EXHAUST SYSTEM(J08E)**

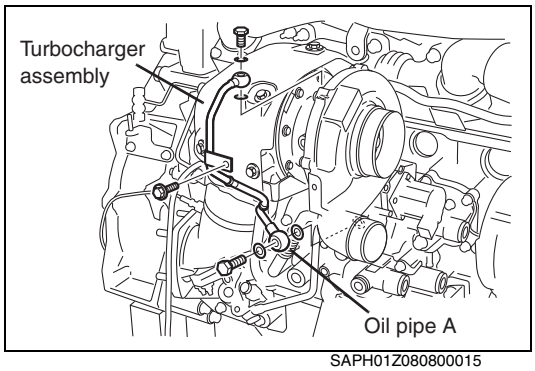

SAPH01Z080800015

**7. DISCONNECTING THE OIL PIPE**

(1) Unfasten the bolt and union bolts to remove the oil pipe A and gaskets from the turbocharger assembly.

**NOTICE**
**Use care not to splash the oil in the pipes and turbocharger assembly.**

**HINT**
**When disconnecting the oil pipe, engine oil will spill. Prepare a reservoir and clean cloths.**

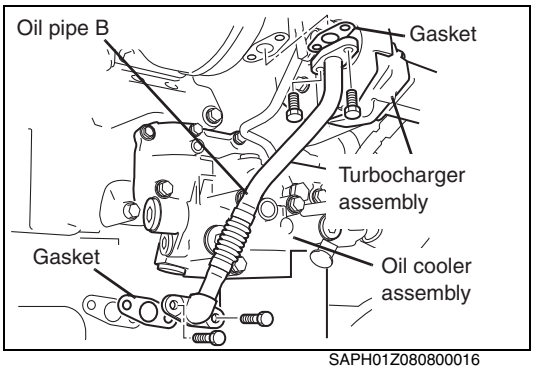

SAPH01Z080800016

(2) Unfasten the bolts to remove the oil pipe B and gaskets from the turbocharger assembly.

**NOTICE**
**Use care not to splash the oil in the pipes and turbocharger assembly.**

**HINT**
**When disconnecting the oil pipe, engine oil will spill. Prepare a reservoir and clean cloths.**

(3) Block oil holes of the turbocharger assembly to prevent entry of foreign matters.

**⚠ CAUTION**
**Use special care to prevent the entry of foreign matter into the turbocharger assembly.**

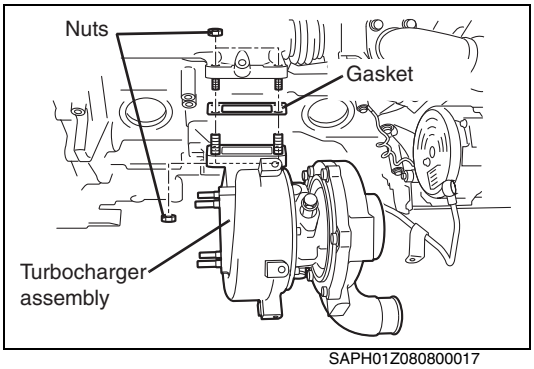

SAPH01Z080800017

**8. REMOVING THE TURBOCHARGER ASSEMBLY**

(1) Unfasten the nuts to remove the turbocharger assembly and gasket from the exhaust manifold.

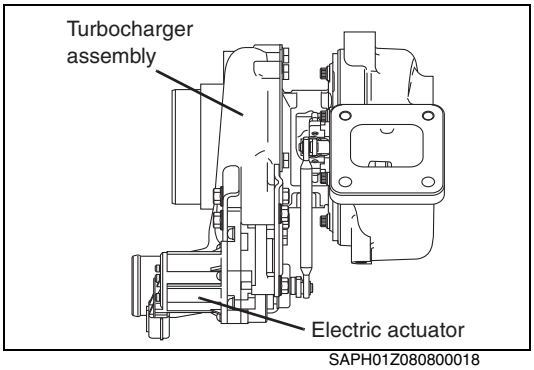

SAPH01Z080800018

**⚠ CAUTION**

- **The electric actuator is plastic and easily damaged. Use care to place it in an appropriate direction for storage after removal.**
- **Heat-resisting steel is used for bolts and nuts. Do not mix them with ordinary bolts and nuts when mounting.**

(2) After removing the turbocharger assembly, block the exhaust manifold port to prevent entry of foreign matters.

## MOUNTING THE TRURBOCHARGER ASSEMBLY

**⚠ CAUTION**
**Observe the following instructions when mounting the turbocharger assembly to the engine or handling after installation. Use special care to prevent the entry of foreign matter into the turbocharger assembly.**

**1. MOUNTING THE TURBOCHARGER ASSEMBLY**

(1) Before mounting, add engine oil from the oil inlet. Rotate the turbocharger assembly by hand to lubricate the ball bearing.

(2) Check the exhaust pipe system for dirt or foreign matter.

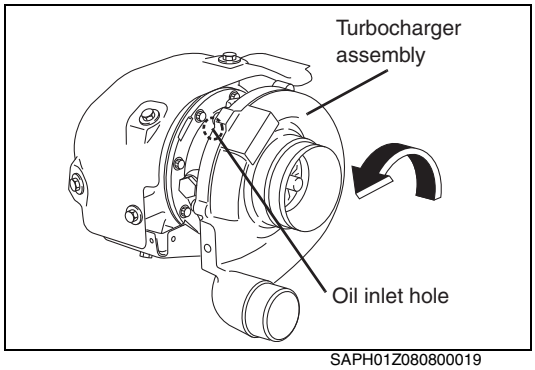

SAPH01Z080800019

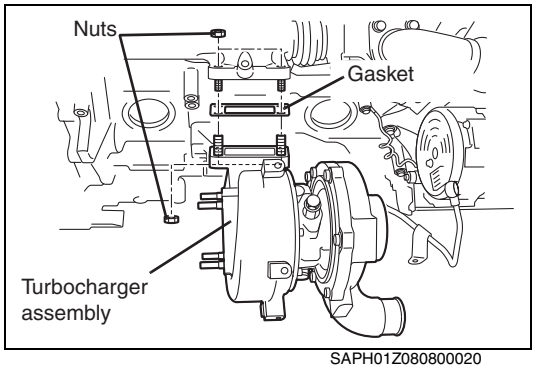

SAPH01Z080800020

(3) Replace with a new gasket and mount the turbocharger assembly to the exhaust manifold with nuts.

**Tightening Torque:**
**74.5 N·m {760 kgf·cm, 55 lbf·ft}**

**⚠ CAUTION**
- **Heat-resisting steel is used for bolts and nuts. Do not mix them with ordinary bolts and nuts when mounting.**
- **Mount the turbocharger securely so that there is no gas leakage from the connections of the exhaust pipe.**

**NOTICE**
**If the stud bolt of the exhaust flange is stuck, use a commercially available stud bolt remover to remove and replace the stuck stud bolt.**

**2. MOUNTING THE OIL PIPE**

(1) Replace with new gaskets and connect the oil pipe B to the turbocharger assembly with bolts.

**NOTICE**
- **Clean the oil pipe and check the pipe for collapse and dirt and foreign matters inside.**
- **Do not use any sealant on the oil pipe installation surface to avoid defects such as damage by clogging or loosening at the tightening portion.**

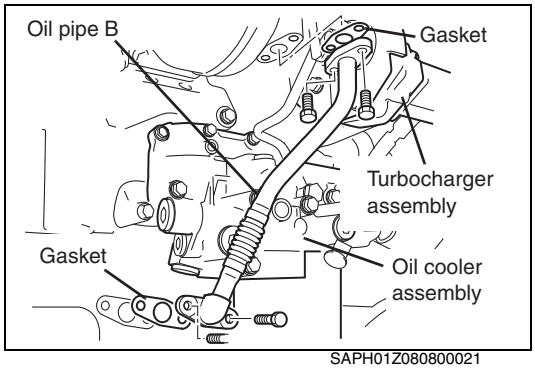

SAPH01Z080800021

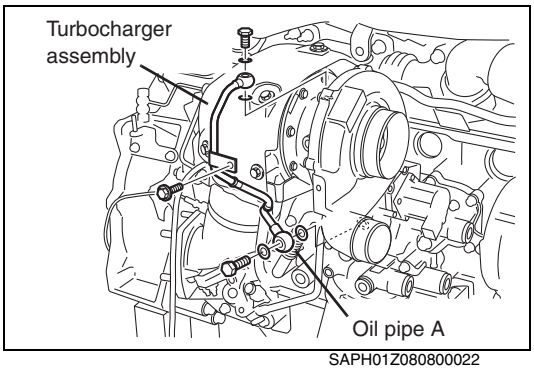

SAPH01Z080800022

(2) Replace with new gaskets and connect the oil pipe A to the turbocharger assembly with a bolt and union bolts .

**NOTICE**

- **Clean the oil pipe and check the pipe for collapse and dirt and foreign matters inside.**
- **Do not use any sealant on the oil pipe installation surface to avoid defects such as damage by clogging or loosening at the tightening portion.**

**3. MOUNTING THE EXHAUST PIPE**

(1) Mount the exhaust pipe.
**Reference: EXHAUST SYSTEM(J08E)**

**4. CONNECTING THE COOLANT PIPE**

(1) Replace with new gaskets and connect the coolant pipe F to the turbocharger assembly with union bolts .

**NOTICE**

- **Clean the oil pipe and check the pipe for collapse and dirt and foreign matters inside.**
- **Do not use any sealant on the oil pipe installation surface to avoid defects such as damage by clogging or loosening at the tightening portion.**

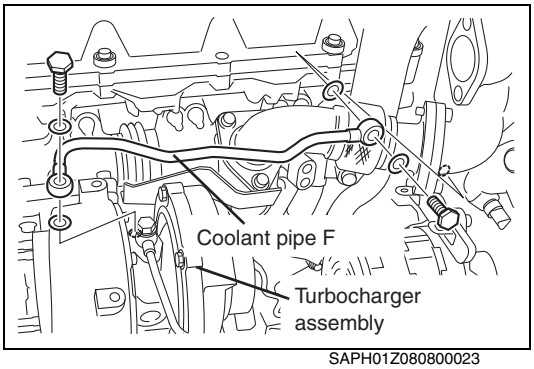

SAPH01Z080800023

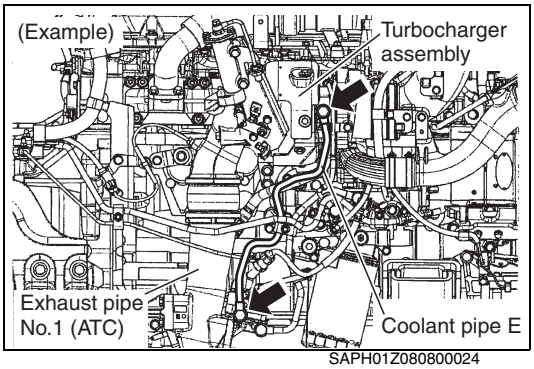

SAPH01Z080800024

(2) Replace with new gaskets and connect the coolant pipe E to the turbocharger assembly with union bolts .

**NOTICE**

- **Clean the oil pipe and check the pipe for collapse and dirt and foreign matters inside.**
- **Do not use any sealant on the oil pipe installation surface to avoid defects such as damage by clogging or loosening at the tightening portion.**

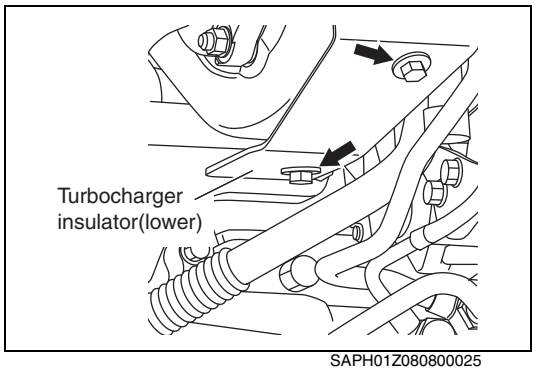

SAPH01Z080800025

**5. MOUNTING THE TURBOCHARGER INSULATOR**

(1) Replace with new bolts and mount the turbocharger insulator (lower) to the turbocharger assembly.

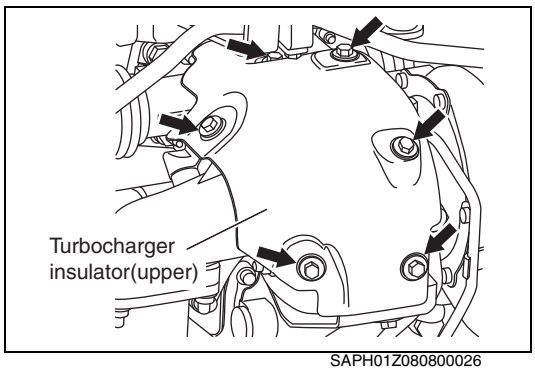

SAPH01Z080800026

(2) Replace with new bolts and install the turbocharger insulator (upper) to the turbocharger assembly.

**6. MOUNTING THE INTAKE PIPE (EXHAUST SIDE)**

(1) Mount the intake pipe (exhaust side).
**Reference: AIR INTAKE SYSTEM (J08E)**

**7. CONNECTING THE HARNESS**

(1) Connect the connector to the electric actuator.

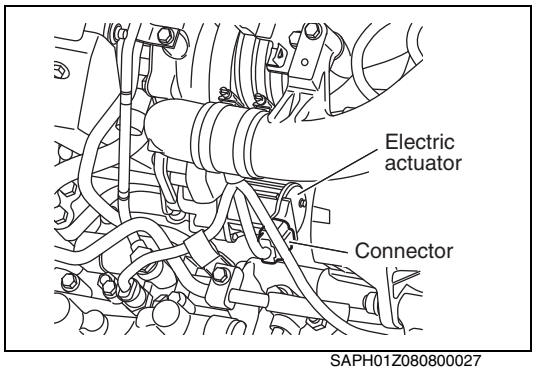

SAPH01Z080800027

**8. FEEDING ENGINE OIL**

(1) Inspect the engine oil level. if insufficient, add engine oil.
**Reference: ENGINE INTRODUCTION(J08E)**

**9. ADDING THE COOLANT**

(1) Add the coolant.
**Reference: COOLING SYSTEM and ENGINE MAECHANICAL(J08E)**

# INSPECTION AFTER MOUNTING

EN01Z08080000001

**1. PROCEDURES FOR OPERATION**

(1) After mounting the turbocharger assembly to the engine, start the engine and inspect each part for leakage of oil, coolant and exhaust gas.

**⚠ CAUTION**

- **Do not run engine at idle or at a high speed immediately after starting the engine. If the turbocharger is operated without sufficient lubrication at the beginning of engine start, it may cause bearing seizure.**
- **If the engine is stopped suddenly, the turbocharger keeps rotating with no oil pressure applied, which may result in a worn bearing due to absence of oil film.**

**NOTICE**

**Run the engine at idle for about 5 minutes before stopping the engine.**

# EMISSION CONTROL (J08E)

EN10-001

**EGR VALVE AND EGR PIPE ..... EN10-2**
COMPONENT LOCATOR ..... EN10-2

**EGR VALVE ..... EN10-3**
DESCRIPTION ..... EN10-3
DISMOUNTING AND MOUNTING ..... EN10-4

**CLOSED VENTILATOR ..... EN10-7**
DESCRIPTION ..... EN10-7
REPLACEMENT OF
CLOSED VENTILATOR ..... EN10-7

**REPLACEMENT ..... EN10-8**
REPLACING THE ELEMENT ..... EN10-8

**SELECTIVE CATALYTIC**
**REDUCTION (SCR) ..... EN10-9**
GENERAL DESCRIPTION ..... EN10-9
COMPONENT LOCATOR ..... EN10-11
INSPECTION ..... EN10-12
SPECIAL TOOL ..... EN10-13
DISMOUNTING AND MOUNTING ..... EN10-14
INSPECTION AND REPAIR ..... EN10-30

# EGR VALVE AND EGR PIPE

## COMPONENT LOCATOR

EN01Z0810J100001

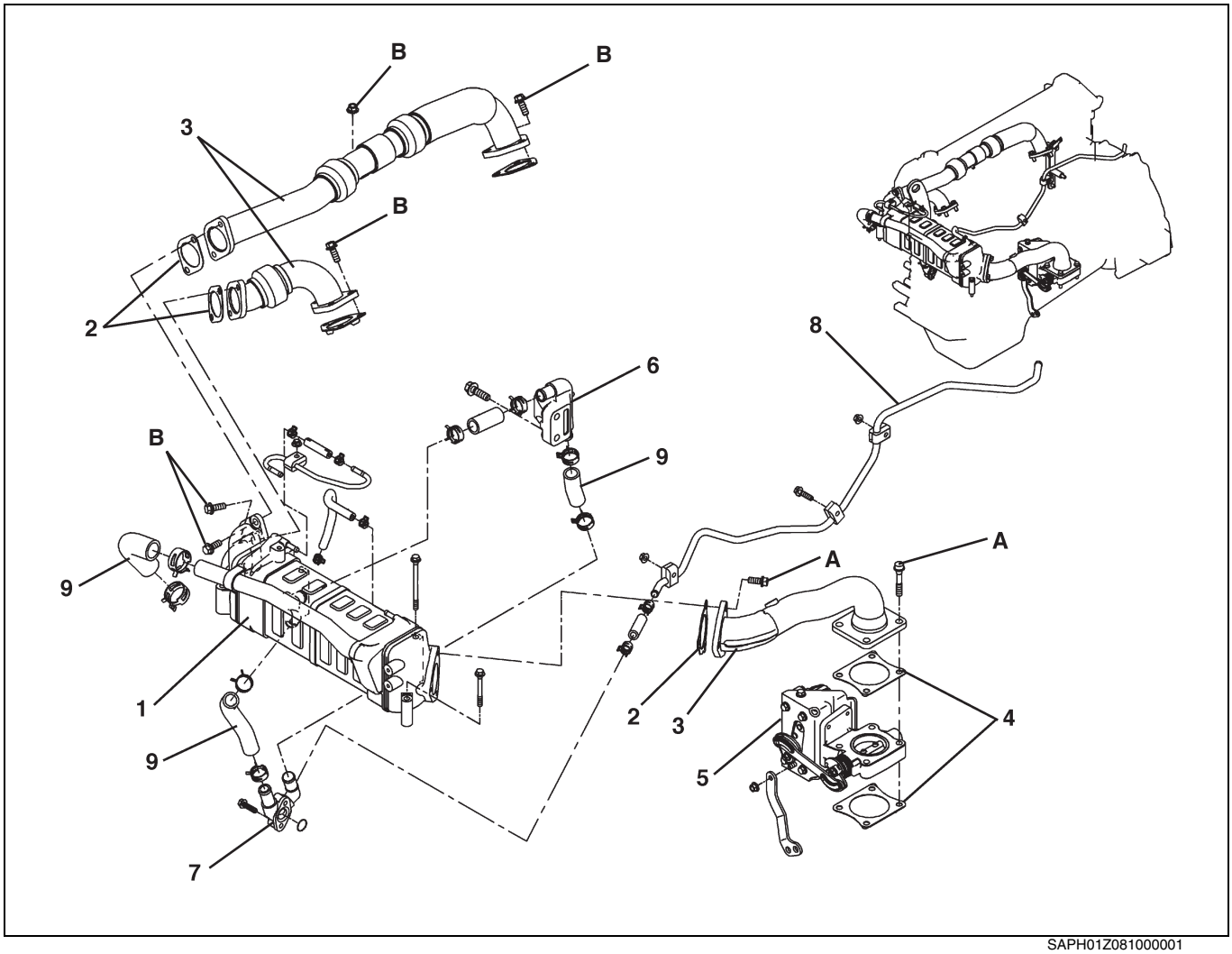


SAPH01Z081000001

| | | | |
|---|---|---|---|
| 1 | EGR cooler sub assembly | 6 | Water pipe sub assembly |
| 2 | Gasket * | 7 | Water pipe sub assembly |
| 3 | EGR pipe assembly | 8 | Water pipe |
| 4 | Gasket * | 9 | Water hose |
| 5 | EGR valve | | |

*: Nonreusable. Be sure to use new parts.

Tightening torque — Unit: N·m {kgf·cm, lbf·ft}

| | | | |
|---|---|---|---|
| A | 55 {560, 40} | B | 68.5 {700, 50.6} |

# EGR VALVE

## DESCRIPTION

EN01Z0810J100002

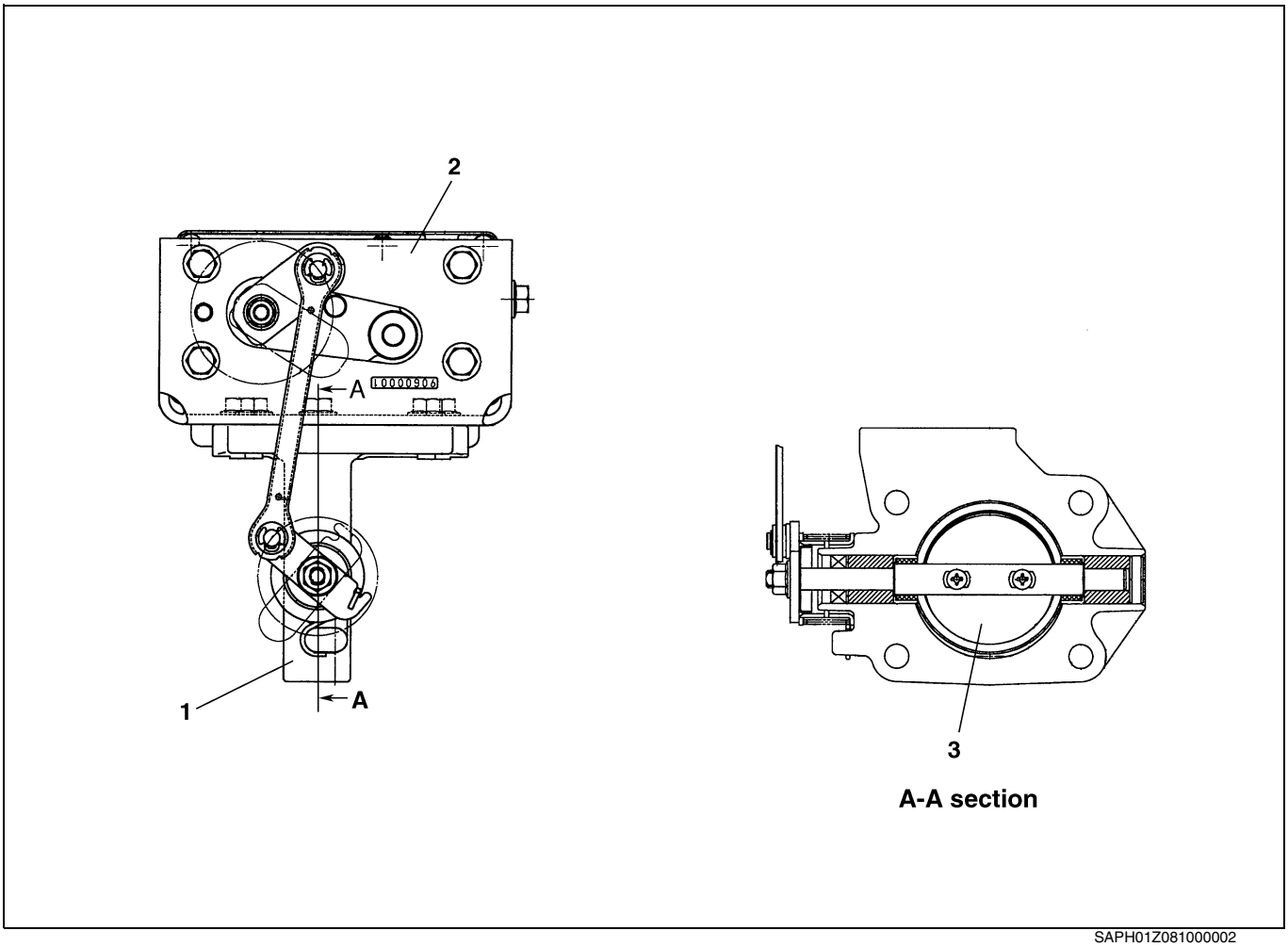


SAPH01Z081000002

| | | | |
|---|---|---|---|
| 1 | EGR valve assembly | 3 | Butterfly valve |
| 2 | DC Motor | | |

# DISMOUNTING AND MOUNTING

EN01Z0810H200001

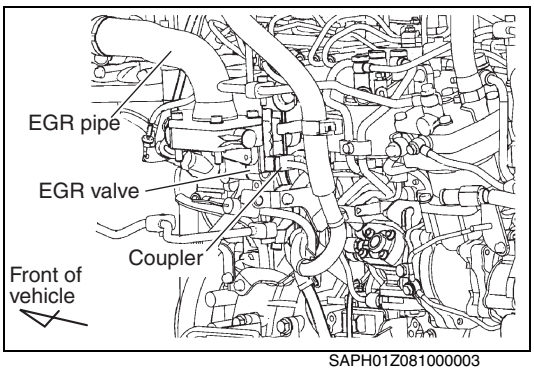

SAPH01Z081000003

## IMPORTANT POINTS - DISMOUNTING

**1. REMOVE THE EGR VALVE AND EGR COOLER.**

**NOTICE**

**To prevent burns ensure the engine is cold before changing the valve. (At least 30 minutes after switching off the engine)**

(1) Disconnect the harness coupler.

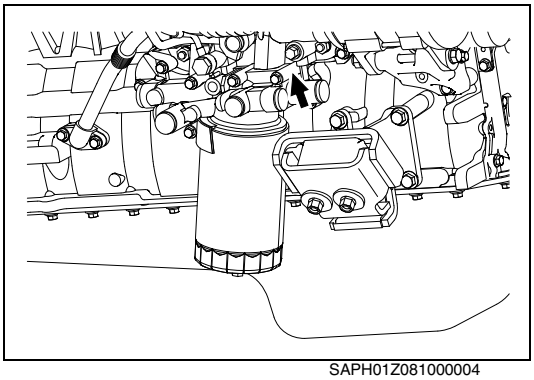
SAPH01Z081000004

(2) Drain the coolant out of the drain plug of oil cooler situated on the right side of the engine.

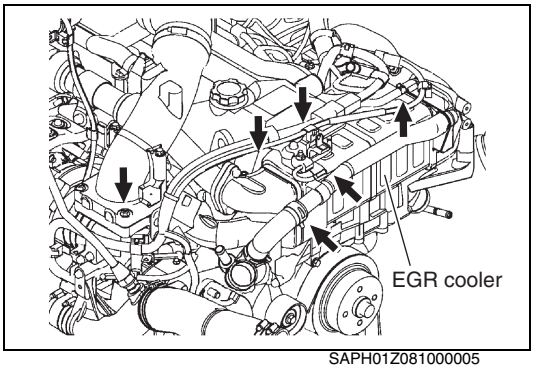

SAPH01Z081000005

(3) Disconnect and remove all pipes connected to the EGR pipe as well as coolant hose and related parts.

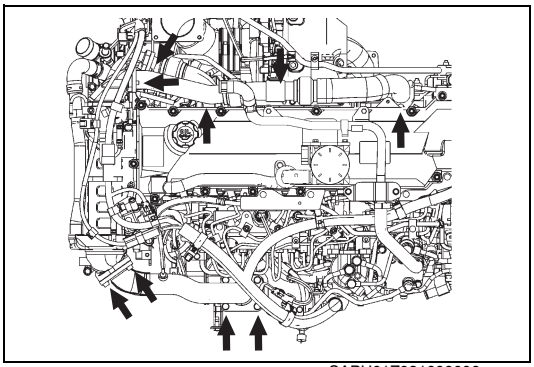
SAPH01Z081000006

(4) Remove EGR pipe.
(5) Remove EGR cooler sub assembly.
(6) Remove EGR valve from intake pipe.

**NOTICE**

- **If you have to place your feet on the engine while working on it, be careful not to fall off the engine or get your foot caught in the engine parts.**
- **Be careful not to step on the EGR valve when servicing the engine.**
- **Do not loosen or tighten the bolts and nuts and snaprings securing the EGR valve components; otherwise, the valve will not perform properly. If you remove the nuts and bolts and snaprings and dismantle a component, do not re-assemble it; instead, replace the valve with a new one.**
- **Be careful not to hit the EGR valve lever with a tool when you are removing or installing the valve.**

**2. INSPECT THE EGR COOLER.**

(1) Visually inspect cracks or clogging in the main body gas passage and sub-coolant piping. In case a trouble is found, replace the EGR cooler with a new one.

## IMPORTANT POINTS - MOUNTING

**1. INSTALL THE EGR VALVE.**

(1) Install the EGR valve to the intake pipe. (with new gaskets)
(2) Install the EGR cooler.
(3) Install the EGR pipe.
**Tightening Torque:**
**55 N·m {560 kgf·cm, 40 lbf·ft}**
**68.5 N·m {700 kgf·cm, 50.6 lbf·ft} (exhaust side EGR pipe)**

**NOTICE**
**Fit the exhaust manifold gasket with the claw of the gasket facing down.**

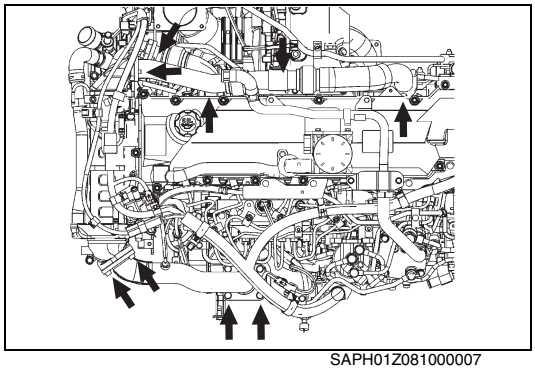
SAPH01Z081000007

(4) Connect and install all pipes connected to the EGR pipe as well as coolant hose and related parts.

**NOTICE**
**Install all pipes with new gasket.**

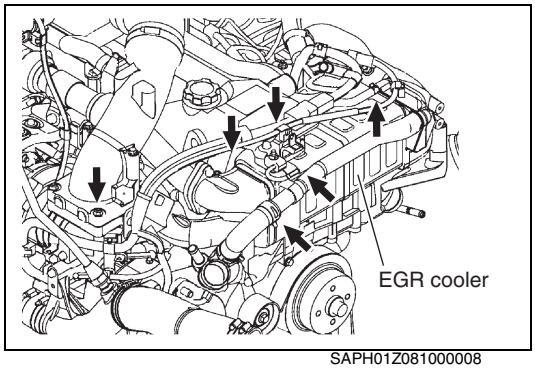

SAPH01Z081000008

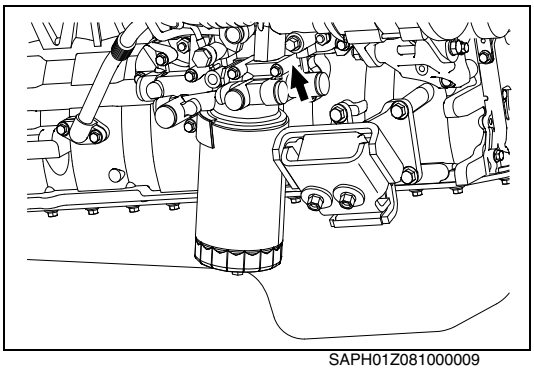

SAPH01Z081000009

(5) Close the coolant plug of the oil cooler situated on the right side of the engine.

**NOTICE**

**Fit the exhaust manifold gasket with the claw of the gasket facing down.**

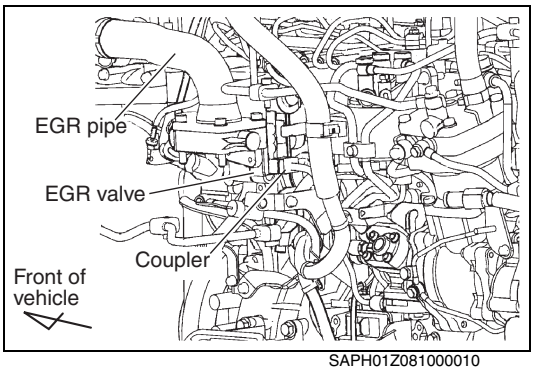


SAPH01Z081000010

(6) Connect the harness coupler.

# CLOSED VENTILATOR

## DESCRIPTION

EN01Z0810C100001

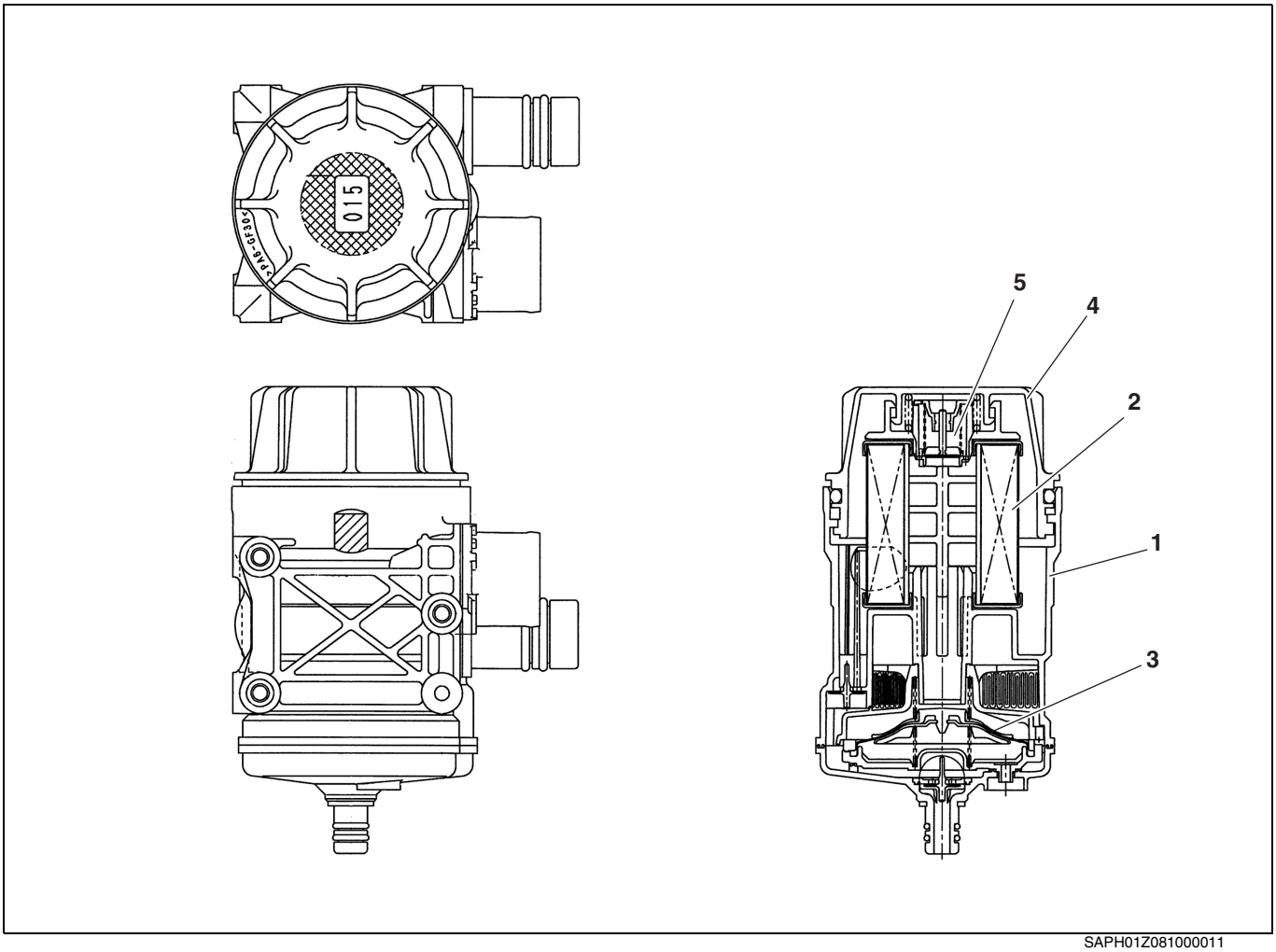


SAPH01Z081000011

| | | | |
|---|---|---|---|
| 1 | Body | 4 | Cap |
| 2 | Filter | 5 | Safety valve |
| 3 | PCV valve | | |

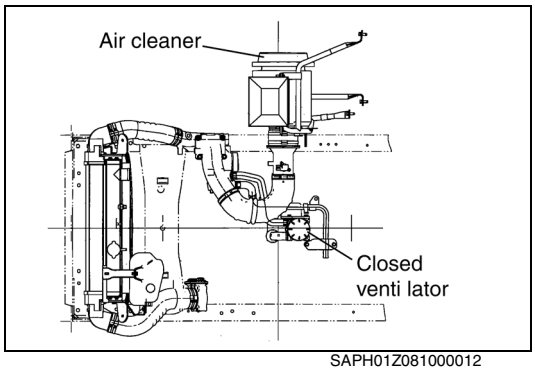


SAPH01Z081000012

## REPLACEMENT OF CLOSED VENTILATOR

EN01Z0810H200002

**1. REMOVE THE CLOSED VENTILATOR.**

(1) Remove the hoses and then the closed ventilator.

**2. INSTALL THE CLOSED VENTILATOR.**

(1) Connect the hoses and install the closed ventilator.

# REPLACEMENT

## REPLACING THE ELEMENT

EN01Z0810H200003

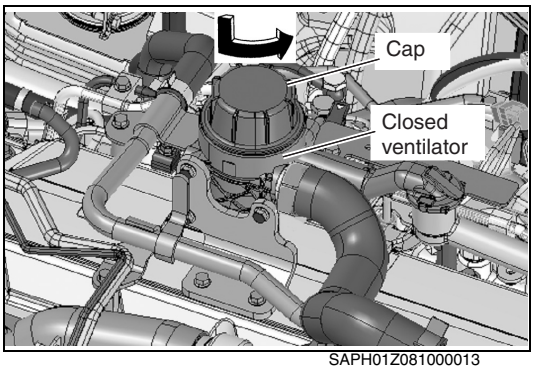

SAPH01Z081000013

**1. REPLACING THE ELEMENT.**

(1) Remove the cap by turning it counterclockwise while pushing it down.

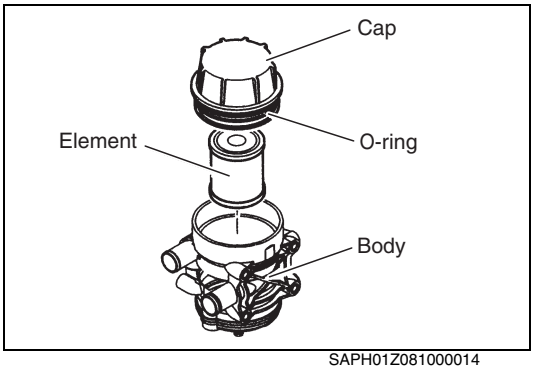

SAPH01Z081000014

(2) Remove the element from the body.

(3) Remove the O-ring from the cap.

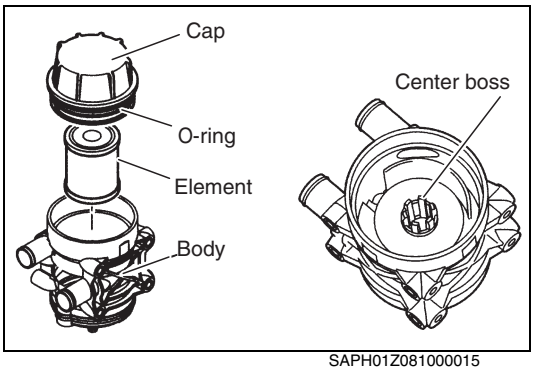

SAPH01Z081000015

**2. INSTALLING THE ELEMENT.**

(1) Replace the O-ring with a new one, apply engine oil to it, and install it in the cap.

(2) After replacing the element with a new one, install it so it is lined up with the center boss of the body.

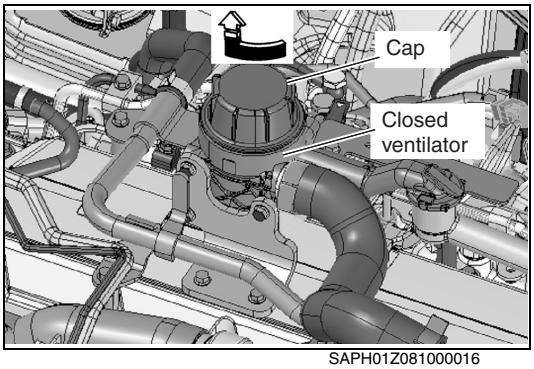

SAPH01Z081000016

(3) Install the cap by turning it clockwise until it is pushed up.

**NOTICE**

- **Do not tighten the cap excessively.**
- **Do not reuse an O-ring.**
- **Remove dirt and foreign matter from the mounting surface of the O-ring.**
  **Reference: It is recommended to replace the closed ventilation element every second time the oil filter is replaced. Refer to page chapter “EN05“ for the oil filter replacement.**

# SELECTIVE CATALYTIC REDUCTION (SCR)

## GENERAL DESCRIPTION

EN01Z0810C100002

- What is SCR?
  SCR is an abbreviation of "Selective Catalytic Reduction", a general term for aftertreatment equipment which promotes a chemical reaction by using a catalyst for eliminating or detoxifying particular chemical ingredients. To meet the EPA2010 regulation the vehicle out NOx level will be extremely close to zero (0.2 Grams per brake horsepower). By mixing the NOx with the ammonia contained in DEF, it will be separated it to harmless water and nitrogen. It is an extremely effective, dependable efficient and economical selection.
- What is DEF?
  DEF is an abbreviation for "Diesel Exhaust Fluid", a solution made from 67.5% purified water and 32.5% automotive-grade urea that serves as a carrying agent for the ammonia needed to reduce nitrogen oxide (NOx) emissions from diesel engines. When DEF is injected into the engine exhaust gas downstream of the DPF, it will be rapidly hydrolyzed producing the oxidizing ammonia needed by the SCR catalyst to complete NOx emissions reductions.
- The system consists of the DEF adding device and its accessories, SCR (Selective Catalytic Reduction) catalyst, DCU, and sensors.

**⚠ CAUTION**

- **Do not add solutions other than DEF in the DEF tank.**
- **Make sure to add API-compliant DEF. It is urea solution with a 32.5% concentration. Addition of DEF other than the above or diluted DEF into the DEF tank will not only deteriorate exhaust gas but will also damage the DEF pump and DEF injector.**
- **If diesel fuel has been mistakenly added into the DEF tank.**
  **Once the engine is started and DEF pump is activated, diesel fuel will enter the DEF piping, DEF pump and DEF injector. If diesel fuel has entered the DEF piping, DEF pump and DEF injector, replace them along with DEF tank and DEF sensor. If the engine has not yet been started, the areas exposed to diesel fuel are only the DEF tank and the DEF piping inside the tank. Disconnect the piping from the DEF tank and replace the DEF tank and DEF sensor. In this case, no other parts need to be replaced.**

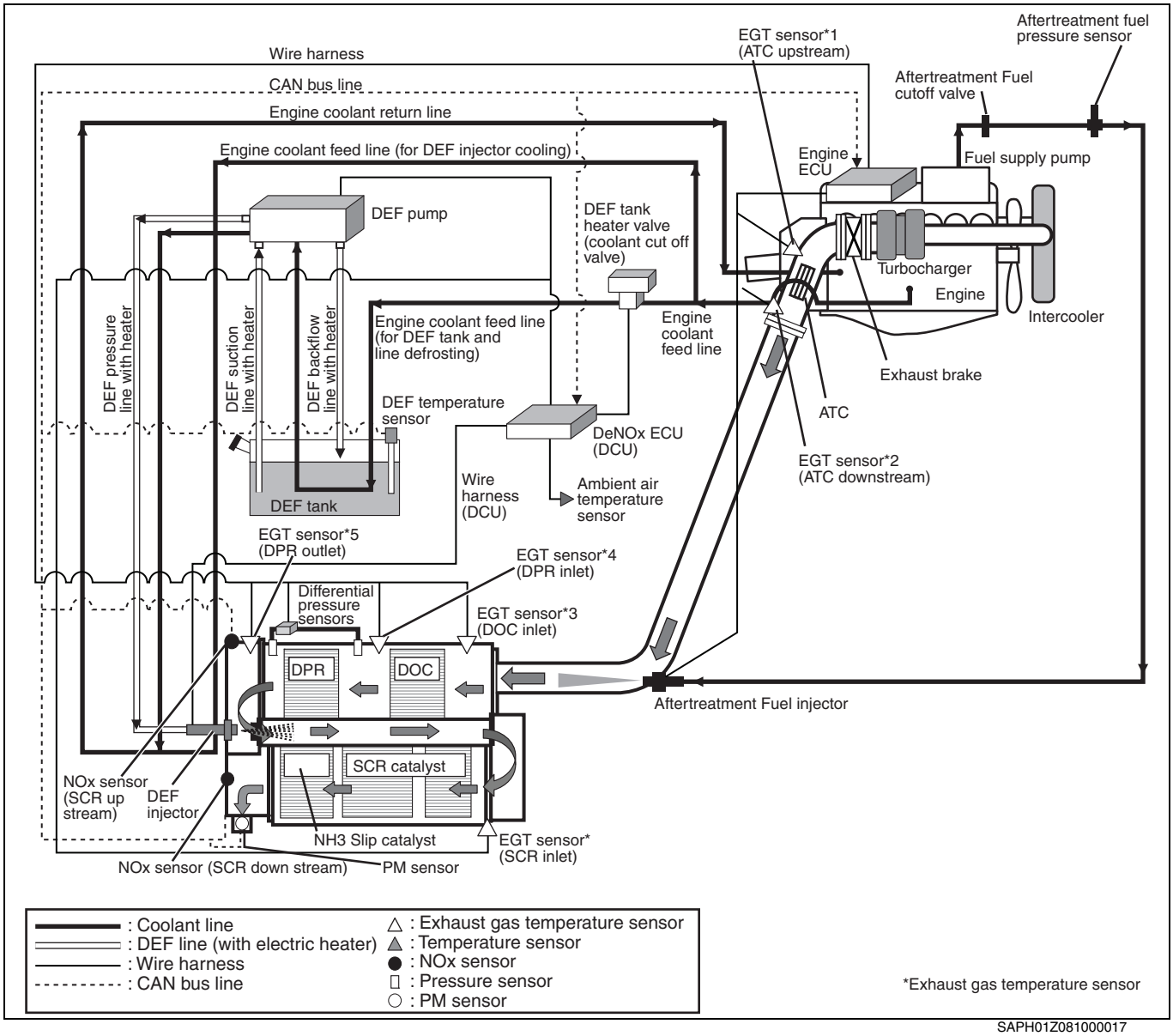


SAPH01Z081000017

# COMPONENT LOCATOR

EN01Z0810J100003

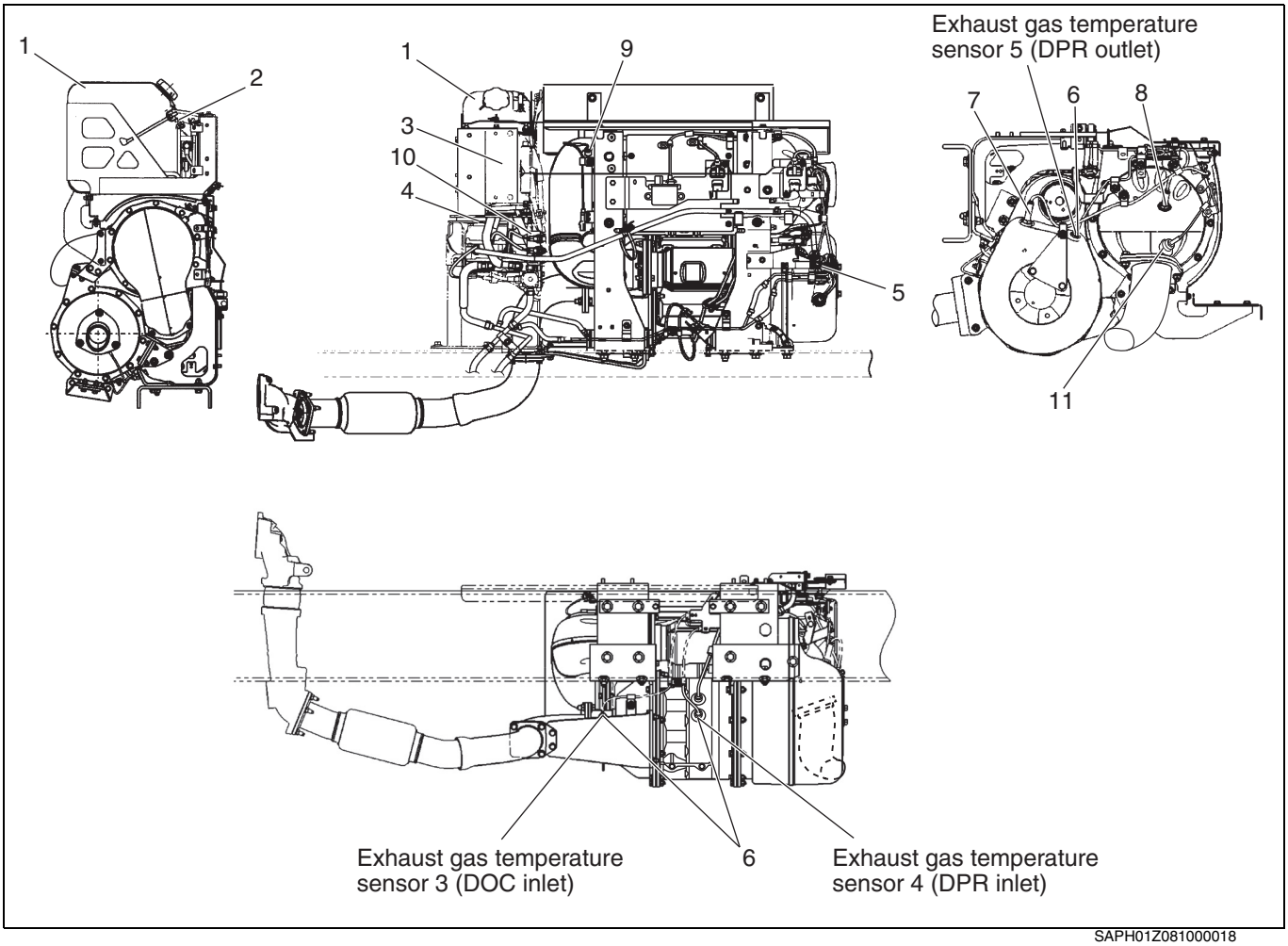


SAPH01Z081000018

| | | | |
|---|---|---|---|
| 1 | DEF tank | 7 | NOx sensor 1 |
| 2 | DEF level sensor | 8 | NOx sensor 2 |
| 3 | DCU (Dosing control unit) | 9 | SCR catalyst inlet temperature sensor |
| 4 | DEF pump | 10 | DEF heater |
| 5 | DEF injector | 11 | PM sensor |
| 6 | Exhaust gas temperature sensor | | |

# INSPECTION

EN01Z0810H300001

## DEF CONCENTRATION INSPECTION

**NOTICE**

**There are three inspection methods for DEF; urea analyzer inspection, pH test paper inspection and refractive index measurement inspection. Use one method from three for inspection.**

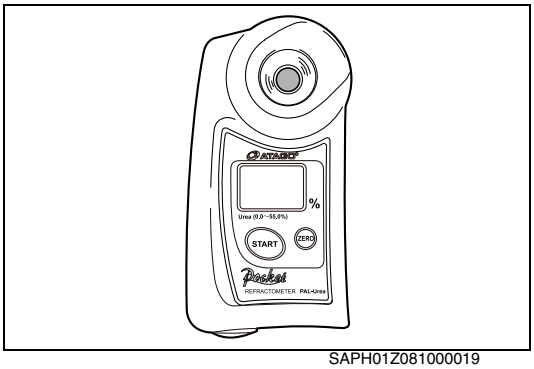


SAPH01Z081000019

### 1. UREA ANALYZER INSPECTION

(1) Extract DEF, put few drops on the urea analyzer to measure the urea concentration and replace the DEF if the value is outside the standard value.
**Standard value: Concentration 31.8-33.2%**

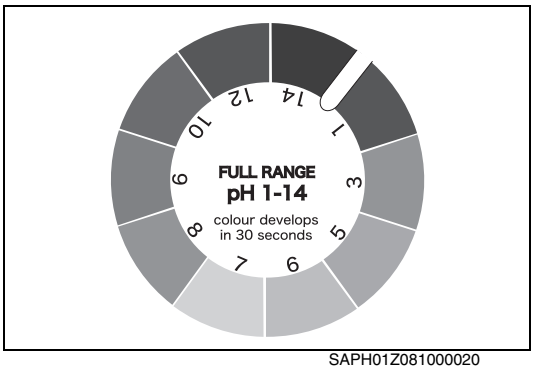


SAPH01Z081000020

### 2. PH TEST PAPER INSPECTION

(1) Extract DEF, put few drops on the pH test paper to measure the color change and replace the DEF if the value is outside the standard value.

| Concentration (%) | Standard value (number) |
|---|---|
| 31.8-33.2 | 9 |

**HINT**

**When the digital type tester is used, standard value is 9.0 to 9.5.**

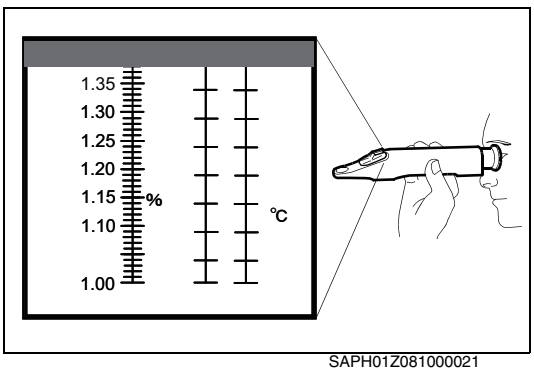


SAPH01Z081000021

### 3. REFRACTIVE INDEX MEASUREMENT INSPECTION

(1) Extract DEF, put few drops on the refractometer to measure the refractive index and replace the DEF if the value is outside the standard value.

| Concentration (%) | Standard value (%) |
|---|---|
| 31.8-33.2 | 1.3814-1.3843 |

# SPECIAL TOOL

EN01Z0810K100001

Prior to starting an engine overhaul, it is necessary to have these special tools.

| Illustration | Part number | Tool name | Remarks |
|---|---|---|---|
| 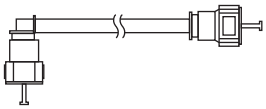 | S0920-E0020 | HOSE SUB ASSY UREA | |

# DISMOUNTING AND MOUNTING

EN01Z0810H100001

## 1. PREPARATION

**⚠ WARNING**
**Do not touch the exhaust pipe and muffler unit when it could be hot. You can be severely burned.**

**NOTICE**

- **If the quick joint used in DEF piping is once removed, DEF powder will precipitate on the seal surface and leakage may occur after reconnection. Before reconnecting, thoroughly check the crystallize (=urea) for deposition of crystallized urea and foreign matter. If deposition of crystallized urea is found, wash it with hot water.**
- **If you perform work with after-run not finished, an DEF filled in the pipe will flow out when the quick connector is disconnected. Be sure that after-run is finished.**
- **What is after-run?**

  **Remained DEF in the DEF injector, DEF pump and plumbing is returned to DEF tank after engine off in order to prevent DEF frozen in the plumbing and crystallization.**
- **If you perform work immediately after the engine is stopped, hot coolant may spout and you may get burned.**

  **Before performing work, be sure that engine coolant is thoroughly cooled.**
- **Formed tubes are used for DEF plumbing. Do not apply an excessive force to tubes when working. If a tube is bent, must to be replaced.**
- **Do not directly touch an DEF or coolant flowing out from the plumbing. If you have touched it, thoroughly rinse it out.**
- **After removal, place a plastic cover to avoid entry of foreign matter into the pipe.**
- **Place a cover immediately after removing the joint to avoid entry of foreign matter into the DEF tank, DEF pump, and DEF injector.**
- **When covering, use separate covers to avoid mixing of DEF and coolant.**
- **If removed by forcing, the quick connector may be damaged. If removal is difficult to do, do not apply an excessive force but remove dust attached around the joint.**
- **The coolant pipe and DEF pipe are assembled for piping. Do not disassemble them.**
- **Do not use tools when disconnecting the quick connector.**
- **Perform work with all the harness connectors fitted. If you perform work with connectors removed, rusting may result. Cover the connectors to avoid splashing of coolant and DEF.**

(1) Disconnect the battery ground terminal.

**⚠ CAUTION**

- **Be sure to disconnect the battery terminals from the battery in accordance with the procedures in this manual and never use the battery disconnect switch when it is necessary to break the supply of electricity completely. Otherwise, electricity may remain supplied from the battery by the circuit that bypasses the battery disconnect switch and you may get burns or injury from the electricity.**

(2) Dismount the steps (top and bottom) and insulator on the right side of the vehicle.

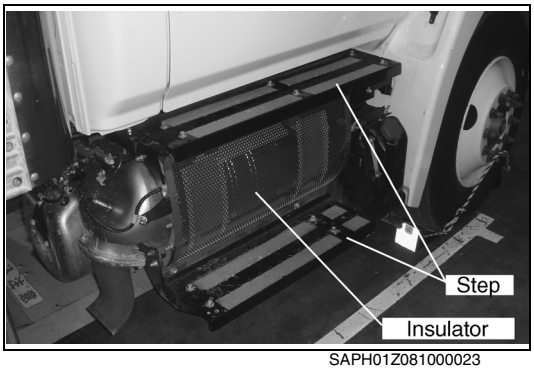

SAPH01Z081000023

(3) Dismount the front fender.



SAPH01Z081000024

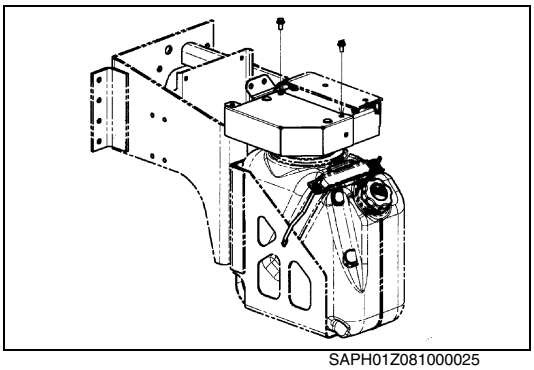
SAPH01Z081000025

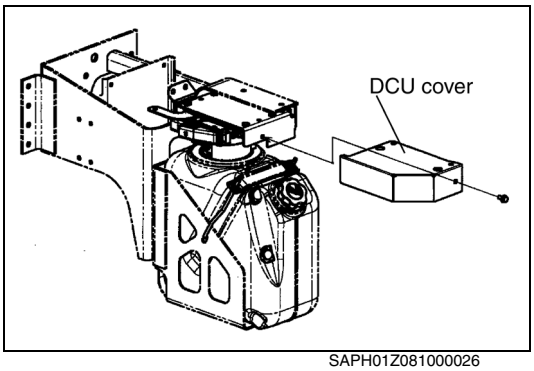

SAPH01Z081000026

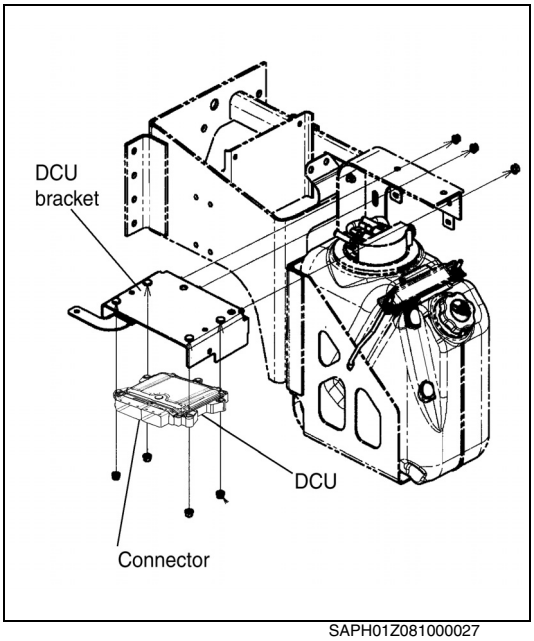

SAPH01Z081000027

**2. DOSING CONTROL UNIT (DCU)**

(1) IMPORTANT POINT - DISMOUNTING

a. Remove the bolt and then the DCU cover.

**⚠ CAUTION**

**When dismounting/mounting the DCU, wear the glove to avoid injury.**

b. Disconnect the harness connectors (53 pin and 86 pin) from the DCU.

**NOTICE**

- **Pull the tab on the connector side surface to remove the connector.**
- **Do not touch the connector pin with bare hand.**
- **Do not have an impact on DCU. If dropping the DCU, do not reuse it because of concern that inside of DCU is damaged.**
- **Protect the removed connectors from dirt and dust.**

c. Remove the DCU bracket mounting nut. Dismount the DCU along with the bracket.

d. Remove the nut and then dismount the DCU from the bracket.

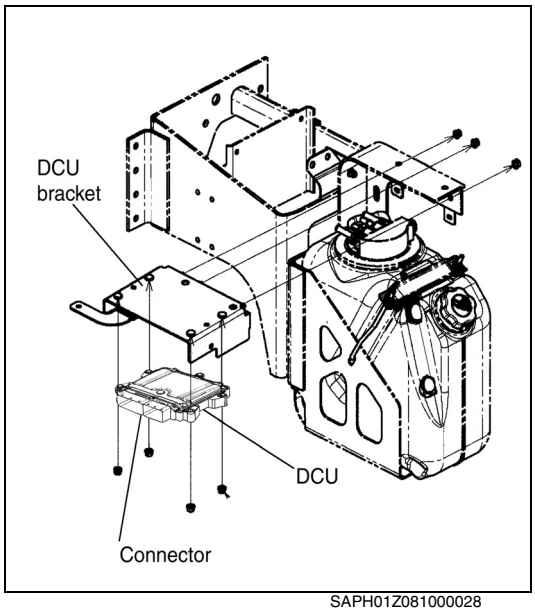

SAPH01Z081000028

(2) IMPORTANT POINT - MOUNTING
a. Mount the DCU to the DCU bracket and then mount the assembly to the vehicle.
**Tightening Torque:**
**18-26 N·m {184-265 kgf·cm, 14-19 lbf·ft} (DCU)**

**Tightening Torque:**
**18-26 N·m {184-265 kgf·cm, 14-19 lbf·ft} (DCU bracket)**

b. Connect the harness connectors (53 pin and 86 pin) to the DCU.

**NOTICE**
**Press the tab on the connector side surface until a "click" is heard.**

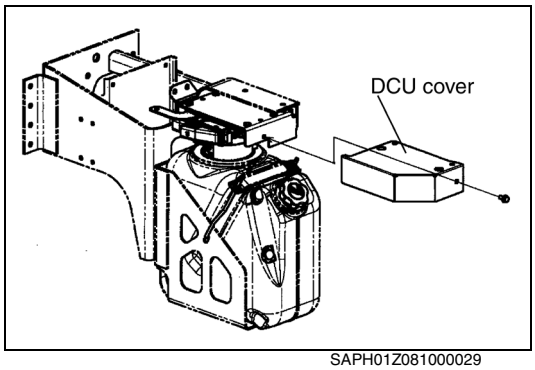

SAPH01Z081000029

c. Mount the DCU cover.
**Tightening Torque:**
**18-26 N·m {184-265 kgf·cm, 14-19 lbf·ft}**

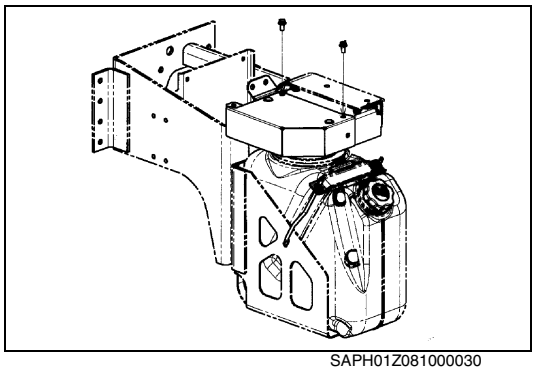
SAPH01Z081000030

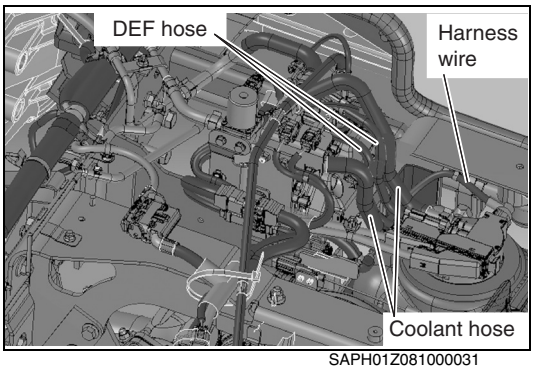

SAPH01Z081000031

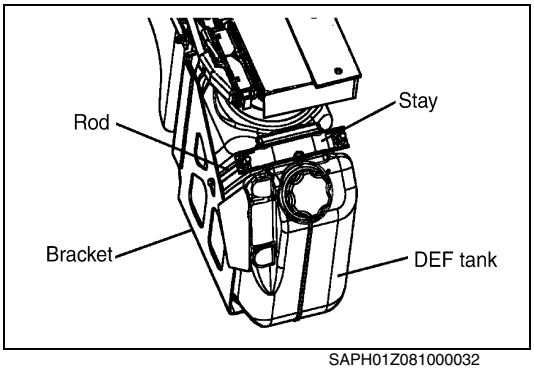

SAPH01Z081000032

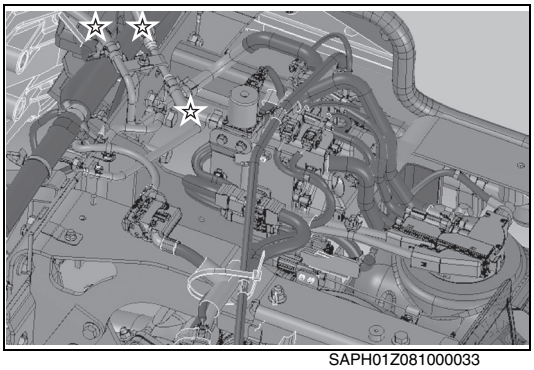
SAPH01Z081000033

**3. DEF TANK**

(1) IMPORTANT POINT - DISMOUNTING

a. Dismount the DCU.
Refer to "DOSING CONTROL UNIT (DCU)" for details.

b. Remove the drain plug from the DEF tank to drain the DEF.

c. Remove the nut and then the stay and rod from the bracket.

d. Move the DEF tank toward outside the vehicle and remove the coolant and DEF hoses.

**NOTICE**

**Remove the coolant hose first to prevent the coolant residue in the hose from entering the DEF tank via the DEF hose connection when removing it.**

**HINT**

**Coolant will spout if the coolant hose is removed. Drain coolant beforehand or block the hose with the vice grip plier. If you use the vice grip at the ☆ area as shown in the figure below, you can minimize leakage of coolant.**

e. Disconnect the harness connector and then remove the DEF tank.

**NOTICE**

- **Remove the harness connector last to prevent the coolant and DEF residues in the coolant and DEF hoses from wetting the harness connector terminal.**
- **Protect the removed connector from dirt and dust.**
- **Protect against water, mud and dust do not enter the DEF sensor connector part of a DEF tank.**
- **Do not leave outdoors the connector part of the DEF sensor in the DEF tank assembly without having to waterproof treatment.**

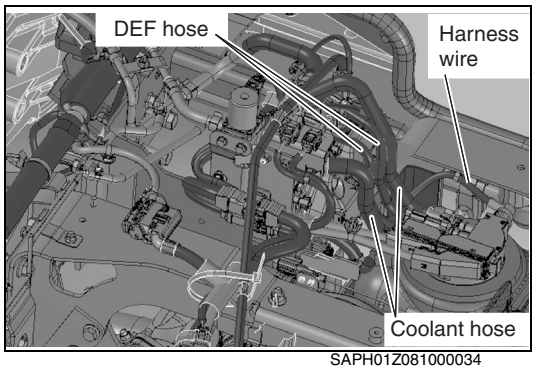

SAPH01Z081000034

(2) IMPORTANT POINT - MOUNTING
a. Set the DEF tank on the bracket.
b. Mount the coolant and DEF hoses.
c. Connect the harness connector.

**NOTICE**
**Tighten clockwise the connector connecting to the DEF sensor until a "click" is heard.**

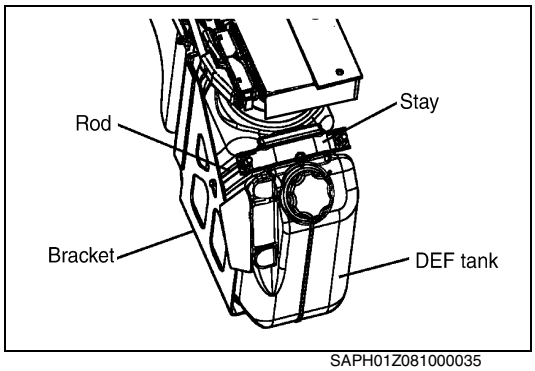

SAPH01Z081000035

d. Fix the DEF tank with the rod, stay and nut.
**Tightening Torque:**
**23.5-36.5 N·m {230-357 kgf·cm, 17.6-27.3 lbf·ft}**
e. Mount the drain plug to the DEF tank. Pour the DEF.

(3) MOUNTING/DISMOUNTING AND INSPECTING DEF SENSOR

**⚠ WARNING**

- **If the DEF is frozen, do not mount or dismount the DEF sensor.**
- **Do not allow foreign objects to enter the DEF tank from the opening.**

a. Dismount the DEF tank.
Refer to "DEF TANK" for details.
b. Remove the DEF sensor by turning it counterclockwise.

**NOTICE**

- **When removing, be careful not to bend the DEF sensor pipe.**
- **When taking out the sensor from inside the tank, be careful not to damage the sensor by hitting the tank edge.**

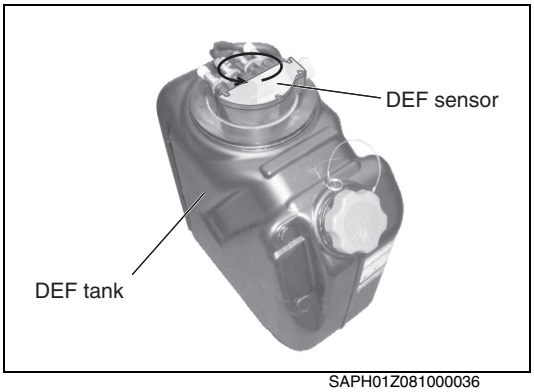

SAPH01Z081000036

c. Check if the DEF sensor float moves smoothly.

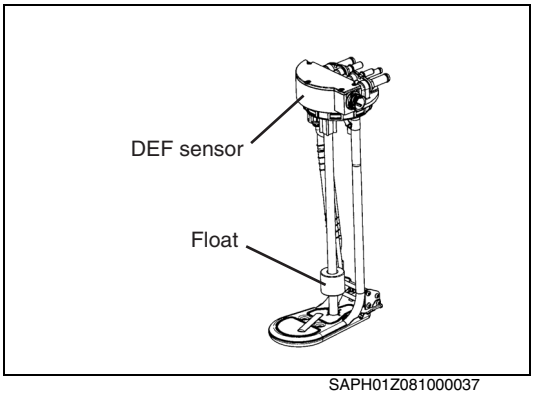

SAPH01Z081000037

d. Insert the DEF sensor to the DEF tank. Rotate it to mount.

**NOTICE**

- **Replace the O-ring between the tank and sensor with a new one.**
- **Thoroughly wipe off crystals of DEF precipitating on the mounting surface with a clean cloth.**
- **Check that the tank center and DEF sensor pipe center are assembled in parallel to each other.**

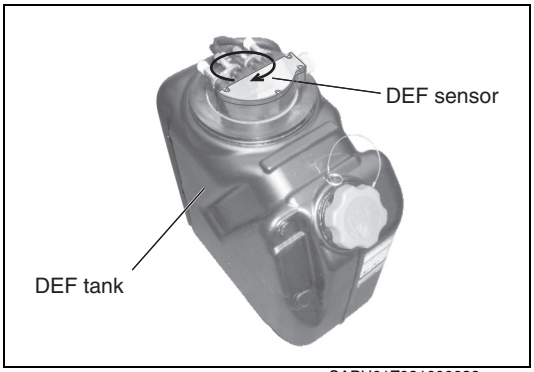

SAPH01Z081000038

**4. DEF PUMP**

(1) IMPORTANT POINT - DISMOUNTING

a. Dismount the DCU.
Refer to "DOSING CONTROL UNIT (DCU)" for details.

b. Dismount the DEF tank.
Refer to "DEF TANK" for details.

c. Remove the hose clamp and harness clip.
Remove the DEF tank bracket.

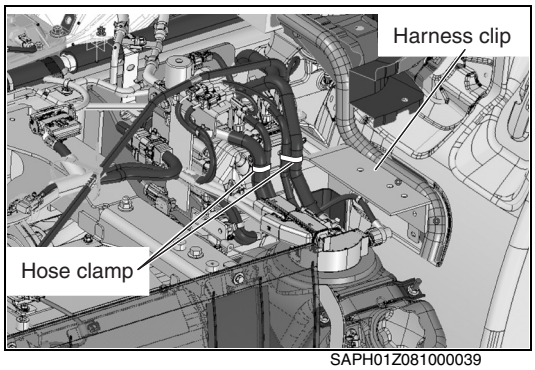

SAPH01Z081000039

d. Release the lock of the harness wire connector. Disconnect it from the DEF pump.

**NOTICE**

- **Be careful to prevent the coolant and DEF residues in the coolant and DEF hoses from wetting the harness connector terminal.**
- **Protect the removed connector from dirt and dust.**

e. Remove the mounting bolt of the DEF pump.

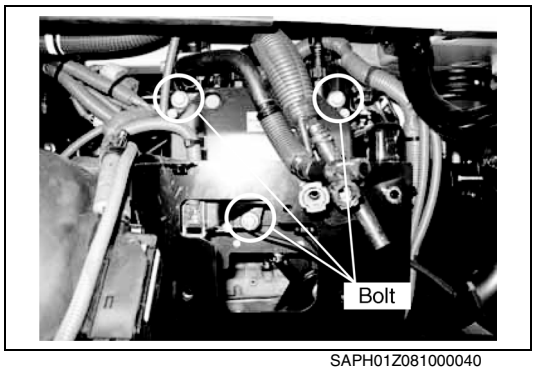

SAPH01Z081000040

f. Remove the coolant and DEF hoses connected to the DEF pump.

**HINT**

**Lower the DEF pump to secure working space.**

g. Dismount the DEF pump.

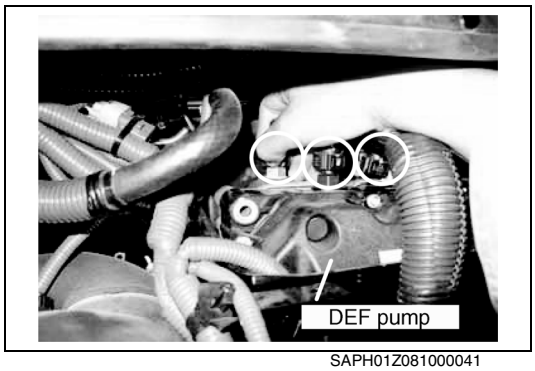

SAPH01Z081000041

(2) IMPORTANT POINT - MOUNTING
a. Set the DEF pump at the mounting position.
b. Connect the harness wire connector to the DEF pump.

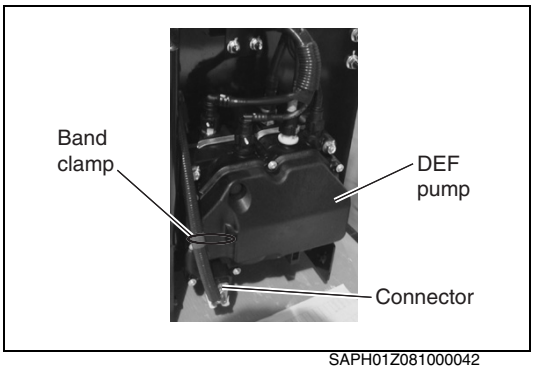

SAPH01Z081000042

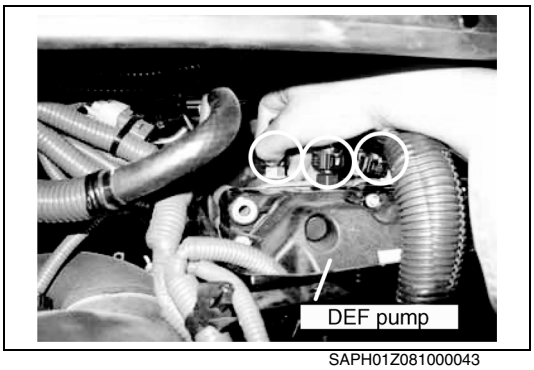

SAPH01Z081000043

c. Mount the coolant and DEF hoses to the DEF pump.

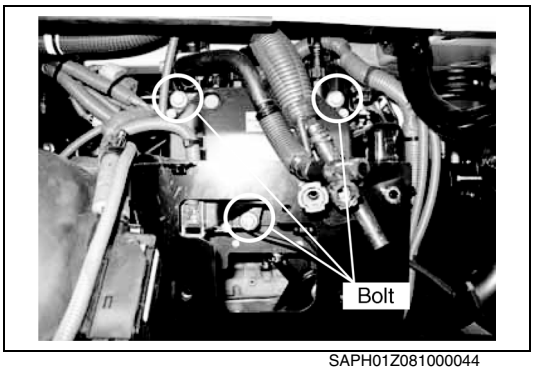

SAPH01Z081000044

d. Mount the DEF pump to the specified position.
**Tightening Torque:**
**15.2-22.8 N·m {155-232 kgf·cm, 11.2-16.8 lbf·ft}**

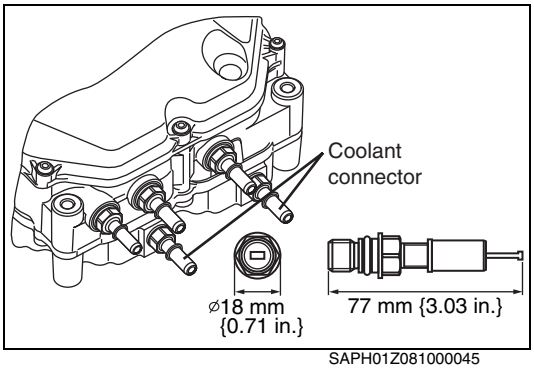

SAPH01Z081000045

(3) REPLACE THE COOLANT CONNECTOR OF THE DEF PUMP.
a. When the connector is exchanged, the O-ring must not be used two times.

**NOTICE**

- **All sealing surface must be clean, contamination or particles are not acceptable.**
- **Mounting torque for connector: 5.0-6.0 N·m {51-61 kgf·cm, 3.7-4.4 lbf·ft}**
- **Wrench size: 15 mm {0.59 in.}**
- **For the mounting process, oil the O-ring with Mobil velocite oil No.6 or equivalent.**

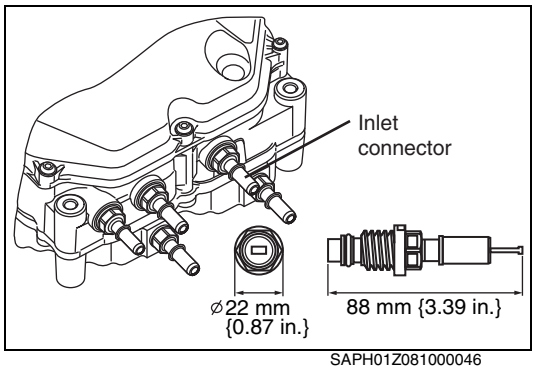

SAPH01Z081000046

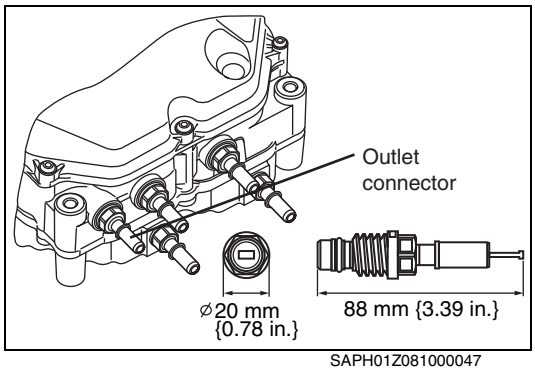

SAPH01Z081000047

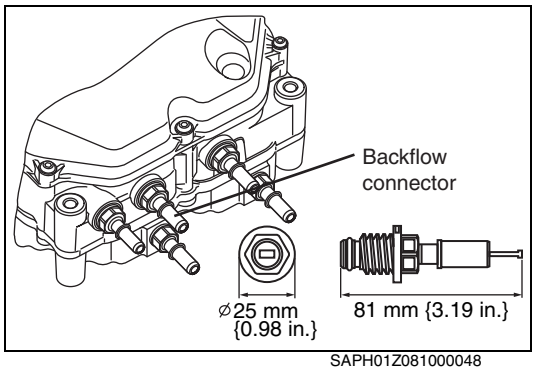

SAPH01Z081000048

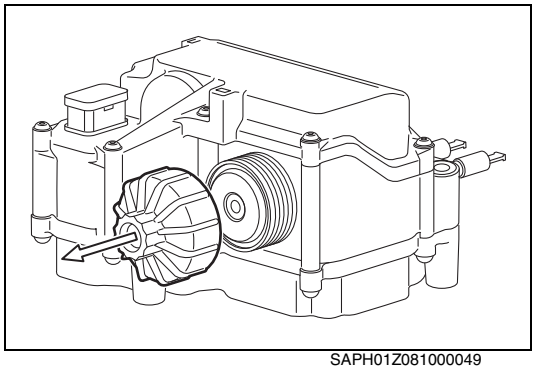
SAPH01Z081000049

(4) REPLACE THE DEF INLET CONNECTOR OF THE DEF PUMP.
   a. When the connector is exchanged, the O-ring must not be used two times.

**NOTICE**

- **All sealing surface must be clean.**
  **Contamination or particles are not acceptable.**
- **Mounting torque for connector: 4.0-5.0 N·m {41-51 kgf·cm, 3.0-3.6 lbf·ft}**
- **Wrench size: 17 mm {0.67 in.}**
- **For the mounting process, oil the O-ring with Mobil velocite oil No.6 or equivalent.**

(5) REPLACE THE DEF OUTLET CONNECTOR OF THE DEF PUMP.
   a. When the connector is exchanged, the O-ring must not be used two times.

**NOTICE**

- **All sealing surface must be clean.**
  **Contamination or particles are not acceptable.**
- **Mounting torque for connector: 4.0-5.0 N·m {41-51 kgf·cm, 3.0-3.6 lbf·ft}**
- **Wrench size: 17 mm {0.67 in.}**
- **For the mounting process, oil the O-ring with Mobil velocite oil No.6 or equivalent.**

(6) REPLACE THE DEF BACKFLOW CONNECTOR OF THE DEF PUMP.
   a. When the connector is exchanged, the O-ring must not be used two times.

**NOTICE**

- **All sealing surface must be clean.**
  **Contamination or particles are not acceptable.**
- **Mounting torque for connector: 4.0-5.0 N·m {41-51 kgf·cm, 3.0-3.6 lbf·ft}**
- **Wrench size: 17 mm {0.67 in.}**
- **For the mounting process, oil the O-ring with Mobil velocite oil No.6 or equivalent.**

(7) REPLACE THE DEF PUMP FILTER.
   a. Remove the filter cover.

**NOTICE**
**Contamination or damage of the sealing surface on the housing is not acceptable.**
**Wrench size: 27 mm {1.063 in.}**

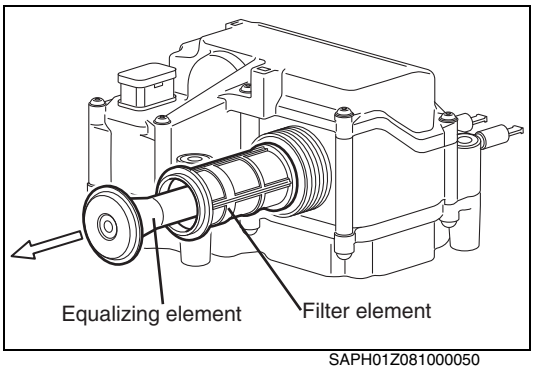

SAPH01Z081000050

b. Remove the equalizing element and the filter element.

**NOTICE**

- **Protect filter area in the housing from contamination.**
- **Prying forcefully with a screwdriver when replacing the filter element may cause damage to the DEF pump body and DEF leakage.**

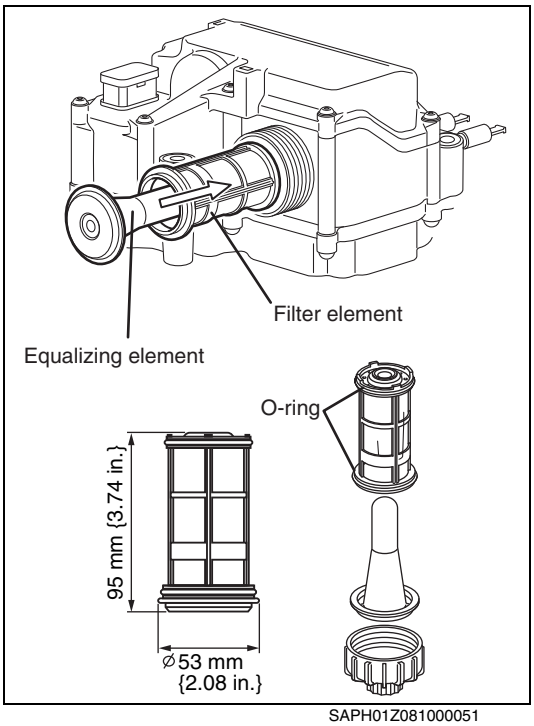

SAPH01Z081000051

c. Replace the filter element and the equalizing element.

**NOTICE**
**The sealing surface on the housing must be clean.**
**No contamination or particles acceptable.**

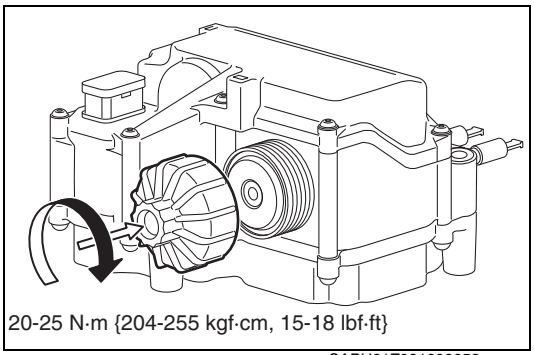

SAPH01Z081000052

d. Mount the filter cover.

**NOTICE**

- **All sealing surface must be clean.**
  **Contamination or particles are not acceptable.**
- **It must be checked if there are cracks around the area of the filter cover. No cracks in the material are allowed. If there are cracks in the housing the entire supply module must be exchanged. If there are cracks in the filter cover, the filter cover must be exchanged.**
- **Wrench size: 27 mm {1.06 in.}**
- **Mounting torque for filter cover: 20-25 N·m {204-255 kgf·cm, 15-18 lbf·ft}**

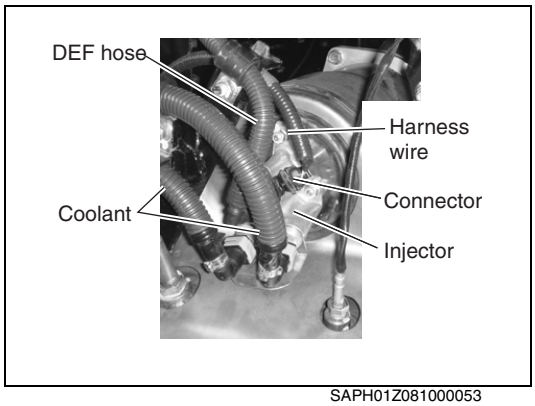

SAPH01Z081000053

**5. DEF INJECTOR**

(1) IMPORTANT POINT - DISMOUNTING

a. Disconnect the harness wire connector from the DEF injector.

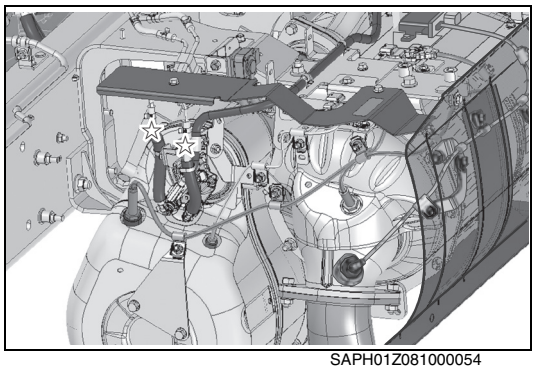
SAPH01Z081000054

b. Disconnect the DEF and coolant hoses connected to the DEF injector.

**HINT**

**Coolant will spout if the coolant hose is removed. Drain coolant beforehand or block the hose with the vice grip. If you use the vice grip at the ☆ area as shown in the figure below, you can minimize leakage of coolant.**

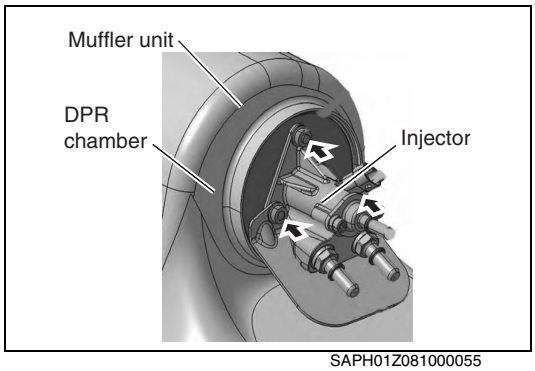

SAPH01Z081000055

c. Remove the nut and then dismount the DEF injector and gasket from the muffler unit.

(2) IMPORTANT POINT - MOUNTING

a. When the DEF injector is reused, must to replace with a new gasket and attach the DEF injector to the muffler unit with the nut.

**Tightening Torque:**
**6-10 N·m {61-102 kgf·cm, 4.4-7.4 lbf·ft}**

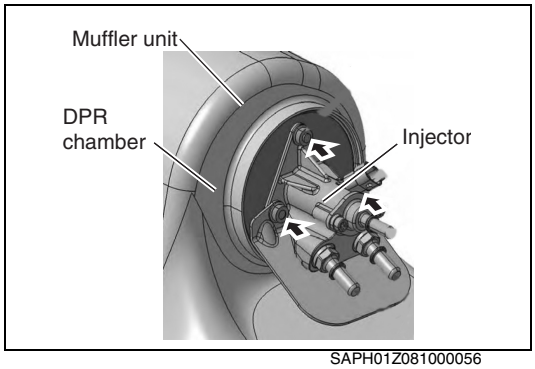

SAPH01Z081000056

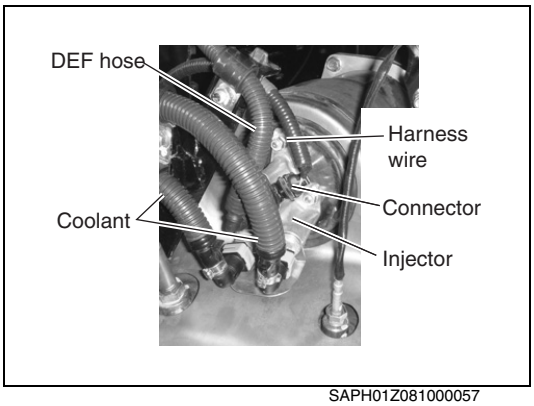

SAPH01Z081000057

b. Connect the DEF and coolant hoses to the DEF injector.

c. Connect the harness wire connector to the DEF injector.

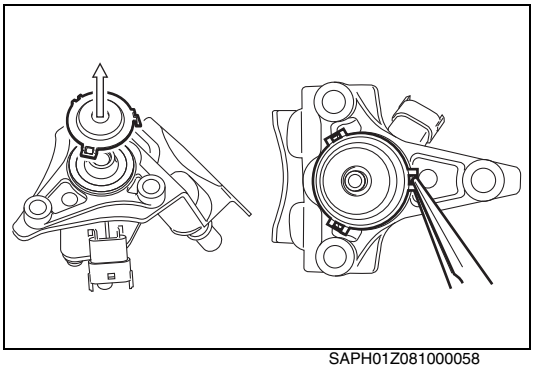
SAPH01Z081000058

(3) REPLACE THE DEF INJECTOR GASKET.

a. Remove the gasket.

**NOTICE**

- **Use pliers, no sharp tools permitted.**
- **Disassembling of the gasket is only allowed at the 3 clips.**

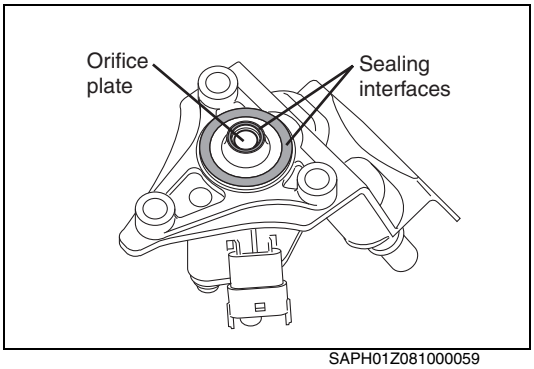

SAPH01Z081000059

b. Clean the sealing surface on the cooling body (if necessary).

**NOTICE**
**Take care when cleaning the sealing interfaces (avoid scratches).**
**Do not touch the orifice plate.**

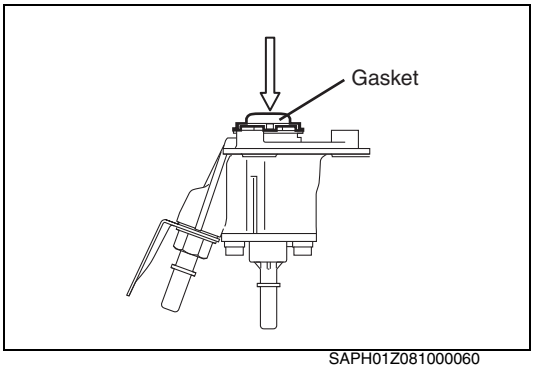

SAPH01Z081000060

c. Mount new gasket.

**NOTICE**

- **The sealing interfaces must be clean.**
- **Place the gasket on the interface and press on.**
- **Avoid any damages or scratches on the gasket.**
- **Dosing module with fully mounted gasket see figure.**

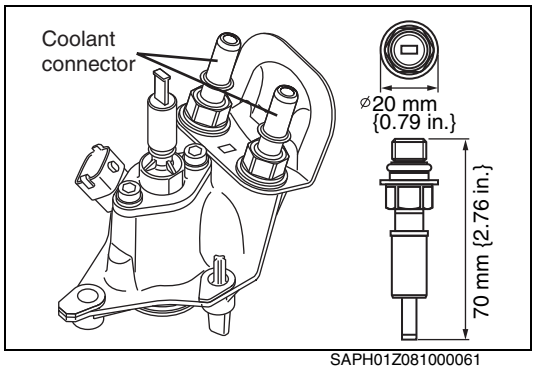

SAPH01Z081000061

(4) REPLACE THE DEF INJECTOR COOLANT PIPE.
a. When the connector is exchanged, The O-ring must not be used two times.

**NOTICE**
- **All sealing surface must be clean.**
- **Contamination or particles are not acceptable.**
- **Mounting torque for connector: 5.0-6.0 N·m {51-61 kgf·cm, 3.7-4.4 lbf·ft}**
- **Wrench size: 15 mm {0.59 in.}**
- **For the mounting process, oil the O-ring with Mobil velocite oil No.61**

**6. ENGINE COOLANT VALVE**

(1) IMPORTANT POINT - DISMOUNTING
a. Dismount the DCU.
Refer to "DOSING CONTROL UNIT (DCU)" for details.
b. Remove the hose 1 clamp and remove the hose 1 (engine coolant valve side only).

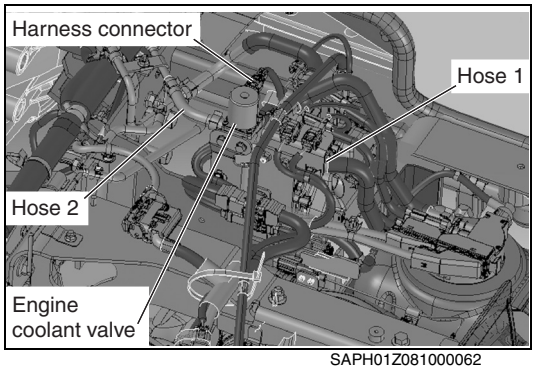

SAPH01Z081000062

c. Disconnect the harness connector.
d. Remove the engine coolant valve mounting bolt.
e. Remove the hose 2 clamp and remove the hose 2 (engine coolant valve side only).

**NOTICE**
**Coolant will spout if the coolant hose is removed. Drain coolant beforehand or block the hose with the vice grip. If you use the vice grip at the ☆ area as shown in the figure below, you can minimize leakage of coolant.**

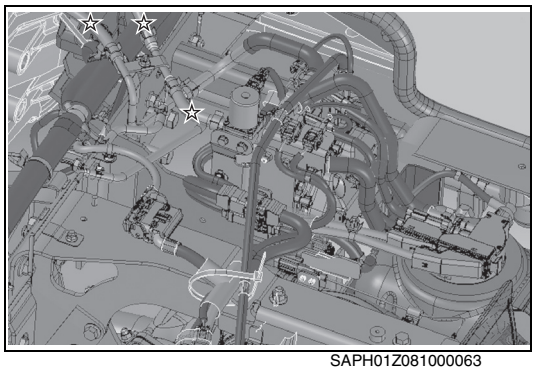
SAPH01Z081000063

(2) IMPORTANT POINT - MOUNTING
a. Connect the hose 2 to the engine coolant valve and fix it with clamp.
b. Mount the engine coolant valve.
**Tightening Torque:**
**18-26 N·m {184-265 kgf·cm, 14-19 lbf·ft}**

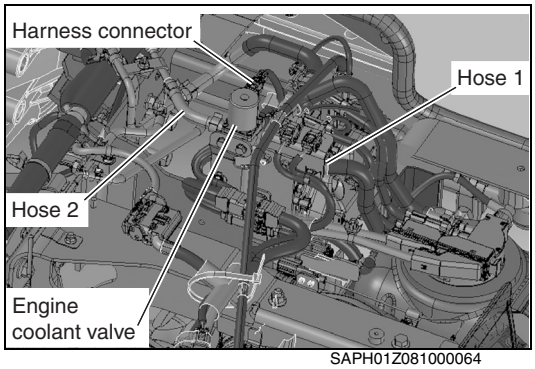

SAPH01Z081000064

c. Connect the harness coupler.
d. Connect the hose 1 to the engine coolant valve and fix it with clamp.
e. Mount the DCU.
Refer to "DOSING CONTROL UNIT (DCU)" for details.

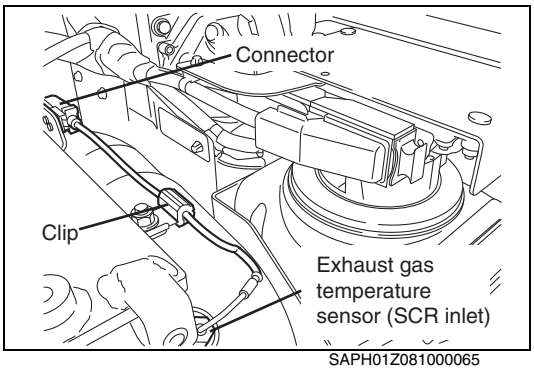

SAPH01Z081000065

**7. EXHAUST GAS TEMPERATURE SENSOR (SCR INLET)**

(1) IMPORTANT POINT - DISMOUNTING

a. Remove the clips.

b. Disconnect the harness connector.

c. Remove the exhaust gas temperature sensor (SCR inlet).

**NOTICE**

**After removing the sensor, check that there is no entry of foreign matters inside the muffler.**

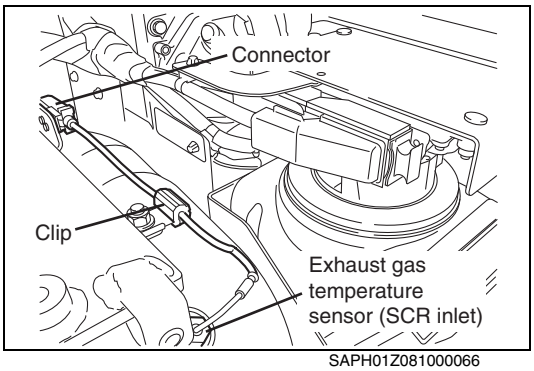

SAPH01Z081000066

(2) IMPORTANT POINT - MOUNTING

a. Mount the exhaust gas temperature sensor (SCR inlet).

**Tightening Torque:**
**25-40 N·m {255-407 kgf·cm, 19-29 lbf·ft}**

b. Connect the harness connector.

c. Mount the clips.

**NOTICE**

**When reassembling, apply anti-seizure lubricant to the temperature sensor.**

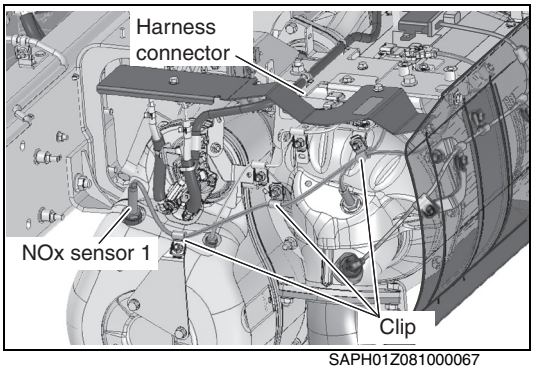

SAPH01Z081000067

**8. NOx SENSOR 1**

(1) IMPORTANT POINT - DISMOUNTING

a. Remove the clips.

b. Disconnect the harness connector.

c. Remove the NOx sensor 1 controller.

d. Remove the NOx sensor 1.

**NOTICE**

**After removing the sensor, check that there is no entry of foreign matters inside the muffler.**

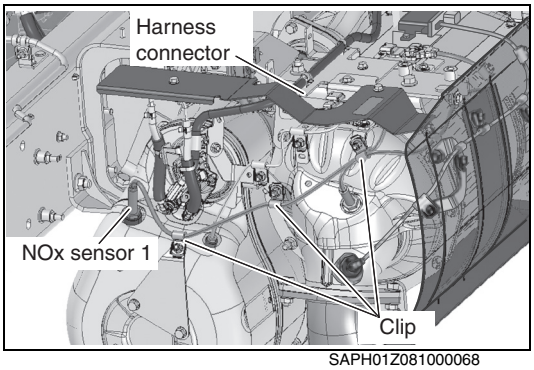

SAPH01Z081000068

(2) IMPORTANT POINT - MOUNTING

a. Mount the NOx sensor 1.

**Tightening Torque:**
**40-60 N·m {407-611 kgf·cm, 29-44 lbf·ft} (Sensor)**

b. Mount the NOx sensor 1 controller.

**Tightening Torque:**
**3.9-7.1 N·m {40-72 kgf·cm, 2.9-5.2 lbf·ft} (Controller)**

c. Connect the harness connector.

d. Mount the clips.

**NOTICE**

**When reassembling, apply anti-seizure lubricant to the NOx sensor.**

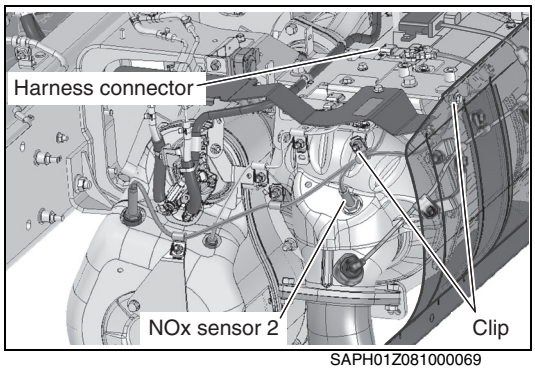

SAPH01Z081000069

**9. NOx SENSOR 2**

(1) IMPORTANT POINT - DISMOUNTING
- a. Remove the clips.
- b. Disconnect the harness connector.
- c. Remove the NOx sensor 2 controller.
- d. Remove the NOx sensor 2.

**NOTICE**
**After removing the sensor, check that there is no entry of foreign matters inside the muffler.**

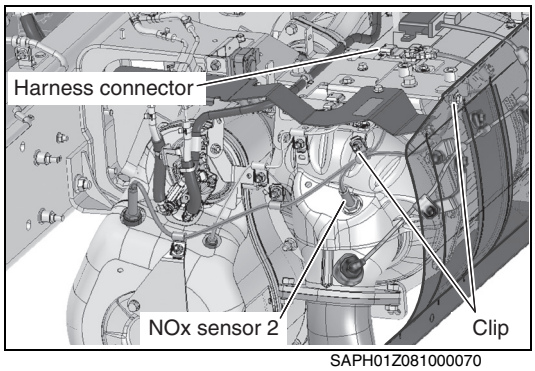

SAPH01Z081000070

(2) IMPORTANT POINT - MOUNTING

- a. Mount the NOx sensor 2.
  **Tightening Torque:**
  **40-60 N·m {407-611 kgf·cm, 29-44 lbf·ft} (Sensor)**

- b. Mount the NOx sensor 2 controller.
  **Tightening Torque:**
  **3.9-7.1 N·m {40-72 kgf·cm, 2.9-5.2 lbf·ft} (Controller)**

- c. Connect the harness connector.
- d. Mount the clips.

**NOTICE**
**When reassembling, apply anti-seizure lubricant to the NOx sensor.**

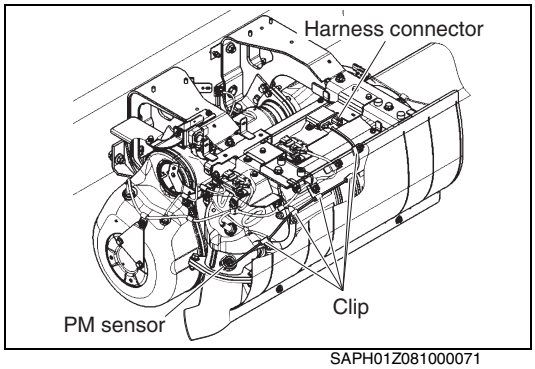

SAPH01Z081000071

**10. PM sensor**

(1) IMPORTANT POINT - DISMOUNTING
- a. Remove the clips.
- b. Disconnect the harness connector.
- c. Remove the PM sensor controller.
- d. Remove the PM sensor.

**NOTICE**
**After removing the sensor, check that there is no entry of foreign matters inside the muffler.**

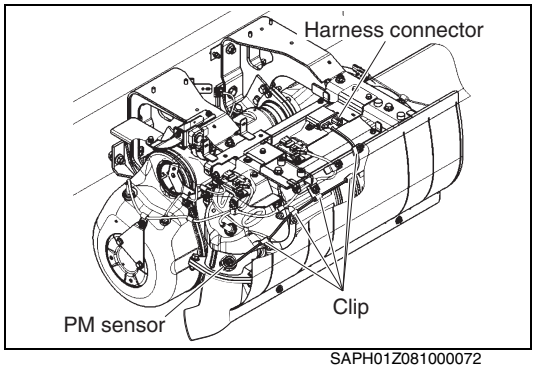

SAPH01Z081000072

(2) IMPORTANT POINT - MOUNTING

- a. Mount the PM sensor.
  **Tightening Torque:**
  **28-42 N·m {286-428 kgf·cm, 20-30 lbf·ft} (Sensor)**

- b. Mount the PM sensor controller.
  **Tightening Torque:**
  **3.9-7.1 N·m {40-72 kgf·cm, 2.9-5.2 lbf·ft} (Controller)**

- c. Connect the harness connector.
- d. Mount the clips.

**NOTICE**
**When reassembling, do not exceed tightening torque. Before assembling PM sensor, clean up oil and foreign matters of PM sensor boss at pare cleaner.**

# INSPECTION AND REPAIR

EN01Z0810H300002

**Inspect the SCR-related components in accordance with the table below and perform a repair or replacement if necessary.**

| Item | Content | Action | Travel distance | Months (Year) |
|---|---|---|---|---|
| DEF filter element (& equalizing element) | Replacement | Replacement | 150,000 mile | – |
| PM sensor | Replacement | Replacement | 150,000 mile | 60 (5) |

# ALTERNATOR (J08E: REMY 12V-130A,135A,180A, 200A)

EN11-001

**ALTERNATOR..... EN11-2**
DATA AND SPECIFICATIONS ..... EN11-2
TROUBLESHOOTING..... EN11-2
COMPONENT LOCATOR..... EN11-3
OVERHAUL ..... EN11-4
INSPECTION AND REPAIR ..... EN11-7

# ALTERNATOR

## DATA AND SPECIFICATIONS

EN0110611I200001

| | |
|---|---|
| **Nominal voltage** | **12V** |
| **Nominal output** | **12V-130A/135A/180A/200A** |
| **Max. output** | **126A/130A/176A/207A at 13.5V, 5,000 r/min** |
| **Max. rotating** | **10,000 r/min** |
| **Rotating direction** | **Right (seen from pulley side)** |
| **Regulator** | **Mount-on** |

## TROUBLESHOOTING

EN0110611F300001

| Symptom | Possible cause | Remedy/Prevention |
|---|---|---|
| **Charge warning light does not light with starter switch ON and engine off** | Fuse blown | Determine cause and replace fuse |
| | Light burned out | Replace light |
| | Wiring connection loose | Tighten loose connections |
| | IC regulator faulty | Replace IC regulator |
| **Charge warning light does not go out with engine running (Battery requires frequent recharging)** | Drive belt loose or worn | Adjust or replace drive belt |
| | Battery cables loose, corroded or worn | Repair or replace cables |
| | Fuse blown | Determine cause and replace fuse |
| | Fusible link blown | Replace fusible link |
| | IC regulator or alternator faulty | Check charging system |
| | Wiring faulty | Repair wiring |

# COMPONENT LOCATOR

EN0110611D100001

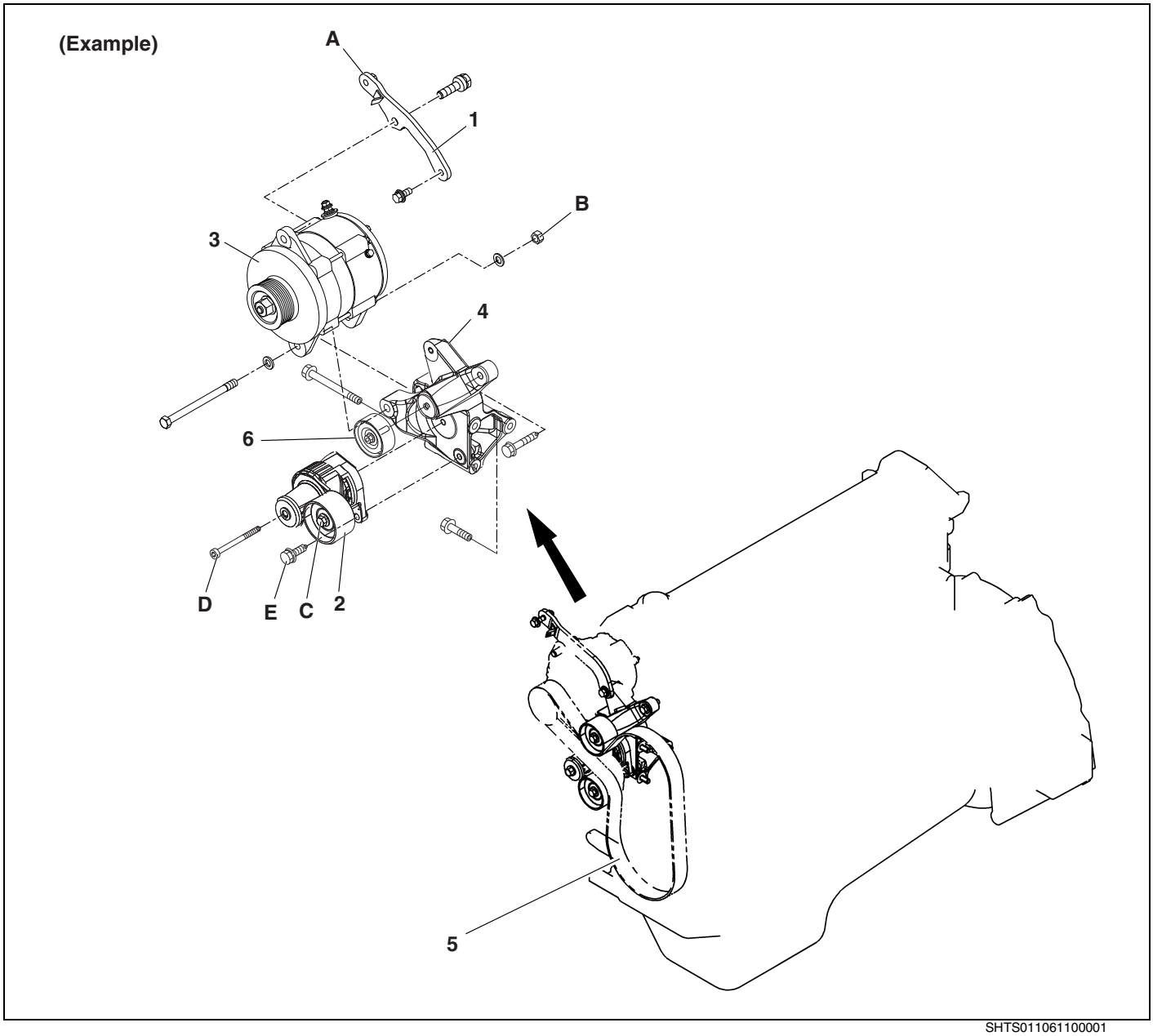


SHTS011061100001

| | | | |
|---|---|---|---|
| 1 | Brace | 4 | Bracket |
| 2 | Tensioner pulley | 5 | V-belt |
| 3 | Alternator | 6 | Idler pulley |

**Tightening torque** **Unit: N·m {kgf·cm, lbf·ft}**

| | | | |
|---|---|---|---|
| A | 88 {897, 65} | D | 68.5 {700, 51} |
| B | 93 {948, 69} | E | 68.5 {700, 51} |
| C | 80-95 {816-968, 59-70} | | |

# OVERHAUL

EN0110611H200001

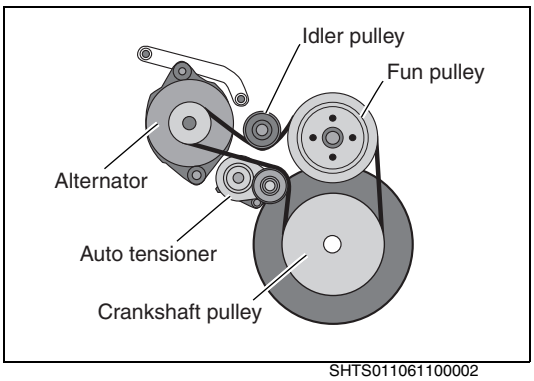

SHTS011061100002

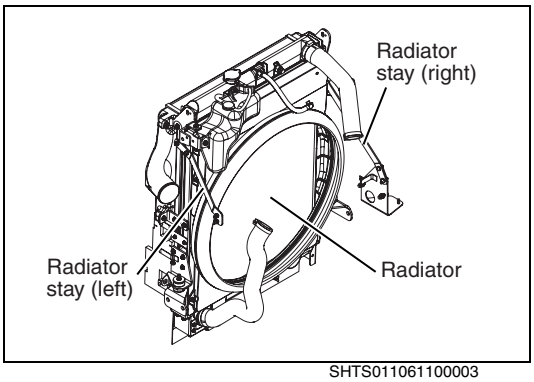

SHTS011061100003

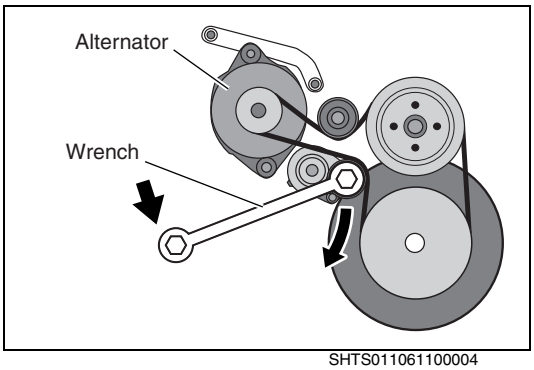

SHTS011061100004

## IMPORTANT POINTS - DISMOUNTING

**1. REMOVE THE ALTERNATOR.**

(1) Remove the drive belt.

(2) Remove the through bolt and the fixing belt.

**NOTICE**

**To remove the belt, turn the nut of the tension pulley with a wrench in counterclockwise direction to turn the tension pulley in arrow direction. Then the belt becomes loose and can be removed.**

**⚠ CAUTION**

- **As the belt is under tension, take care not to get your hand caught at the time of removal.**
- **Remove the following parts because your hand might be stuck when replacing the belt.**

**a. Engine side cover**

**b. Suction hose**

**c. Fun shroud bracket (Engine side)**

**d. Radiator stay**

**e. Radiator stay bracket**

**Failure to disconnect negative battery cable at battery before removing or attaching alternator "BAT" terminal lead may result in an injury. If a tool is shorted at alternator "BAT" terminal, the tool can quickly heat enough to cause a skin burn.**

**NOTICE**

**Always reinstall fasteners at original location. If necessary to replace fasteners, use only correct part number or equivalent.**

- **If correct part number is not available, use only equal size and strength. For alternator internal fasteners, refer to Delco Remy America Standard Hardware Fasteners section in Service Parts Catalog.**
- **Fasteners that are not to be reused will be noted in procedure.**
- **Fasteners requiring thread locking compound will be noted in procedure.**
- **Use specified torque values when shown.**

**Using or replacing fasteners in any other manner could result in part or system damage.**

**If diagnosis determines that alternator repair is needed, remove alternator from engine according to manufacturer's instructions.**

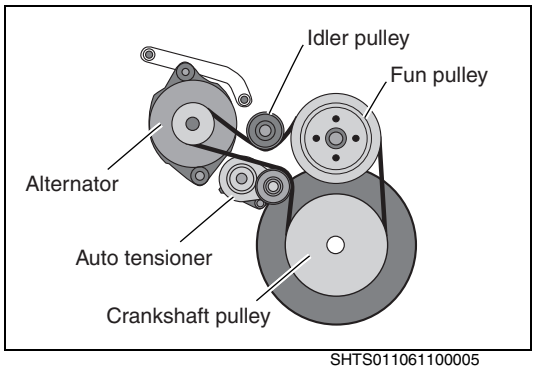

SHTS011061100005

## IMPORTANT POINTS - MOUNTING

**1. INSTALL THE ALTERNATOR.**

(1) Install the alternator with through bolt and fixing bolt.
**Tightening Torque:**
**Through bolt: 93 N·m {948 kgf·cm, 69 lbf·ft}**
**Fixing bolt: 88 N·m {897 kgf·cm, 65 lbf·ft}**

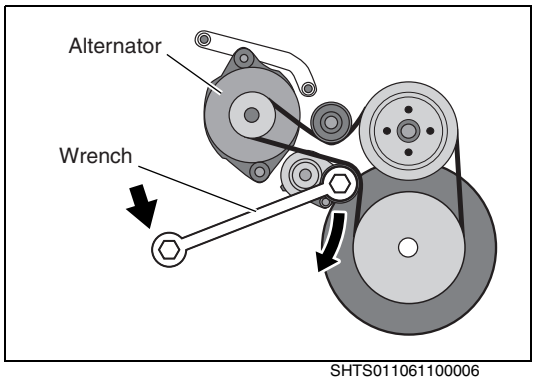

SHTS011061100006

(2) Install the drive belt.

**NOTICE**
**Turn the tension pulley in the same way as for the belt removal and install the belt.**

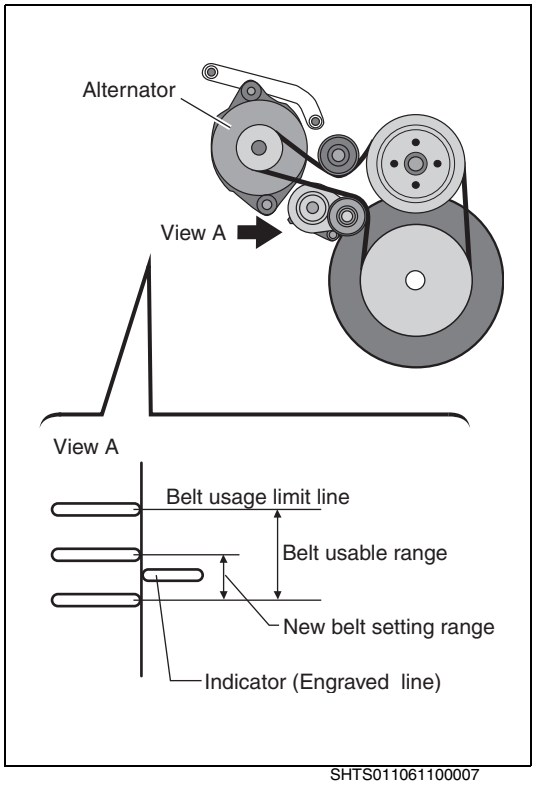

SHTS011061100007

**NOTICE**
**When installing the drive belt, use the gauge on the belt tensioner (1) to confirm that the tensioner arm is correctly positioned. (View from A.)**

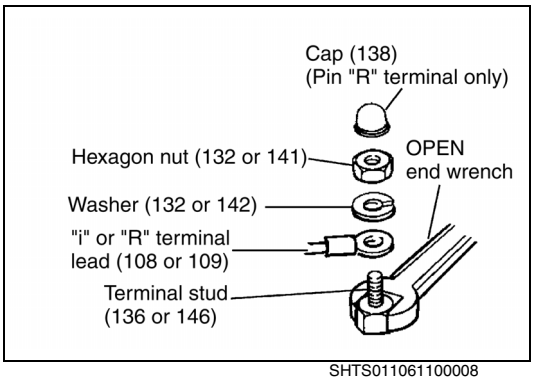


SHTS011061100008

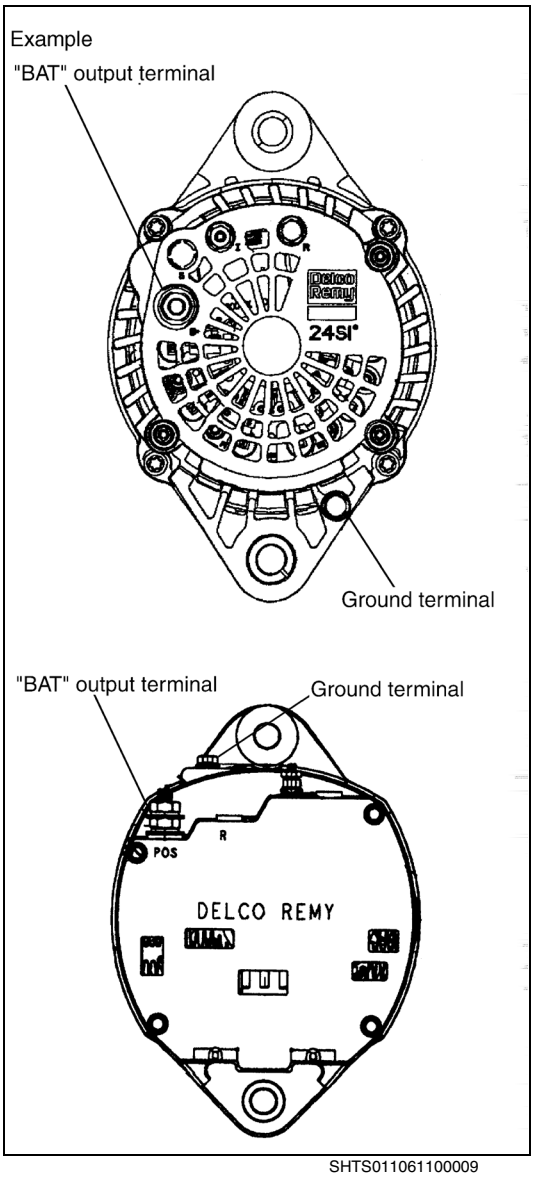


SHTS011061100009

**2. INSTALL OR CONNECT**

(1) "I" and/or "R" terminal lead(s) (108 or 109), if used, to threaded terminal stud(s) (136 and/or 146), washer(s) and hexagon nut(s) (131 and/or 141).

**NOTICE**

**Use suitable open end wrench to hold nut portion of terminal stud(s) (125, 136 and/or 146).**

**Tightening Torque:**
**130A/135A : 2.0 N·m {20 kgf·cm, 17.7 lbf·in}**
**180A/200A : 4.0 N·m {40 kgf·cm, 35.4 lbf·in}**

(2) Cap (138) to the "R" (or "Relay") pin terminal stud (146A) if necessary.

(3) Ground lead (110) to "GRD" hole in SRE housing (1), with screw assembly (159).
**Tightening Torque:**
**6 N·m {61 kgf·cm, 55 lbf·in}**

(4) "BAT" output lead (111), washer (122) and nut (121) to "BAT" terminal stud (125).
**Tightening Torque:**
**130A/180A/200A: 11 N·m {112 kgf·cm, 97.4 lbf·in}**
**135A: 9 N·m {92 kgf·cm, 79.7 lbf·in}**

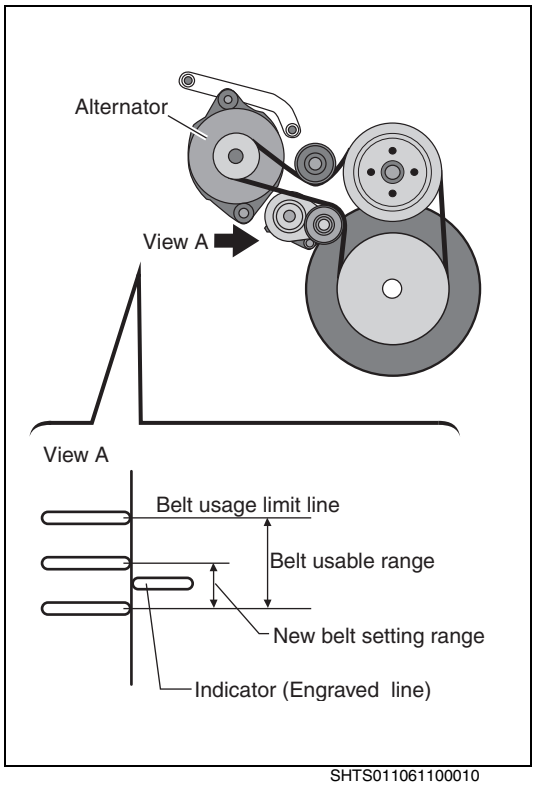


SHTS011061100010

## IMPORTANT POINTS - ON - VEHICLE INSPECTION

**1. INSPECT THE DRIVE BELT**
**If the indicator (engraved line) is out of the belt usage limit line, or if the belt is damaged, replace the belt.**

# INSPECTION AND REPAIR

EN0110611H300001

**Inspect the alternator-related components in accordance with the table below and perform a repair or replacement if necessary.**

| Item | Content | Action | Travel distance |
|---|---|---|---|
| **130A/180A/200A Alternator** | **Replacement** | **Replacement** | **250,000 mile** |
| **135A Alternator** | **Replacement** | **Replacement** | **350,000 mile** |

# STARTER (J08E)

EN12-001

**STARTER ..... EN12-2**
DATA AND SPECIFICATIONS ..... EN12-2
DESCRIPTION ..... EN12-2
TROUBLESHOOTING ..... EN12-3
COMPONENT LOCATOR ..... EN12-4
OVERHAUL ..... EN12-5
INSPECTION AND REPAIR ..... EN12-9

# STARTER

## DATA AND SPECIFICATIONS

EN0110612I200001

| | |
|---|---|
| **Type** | **Planetary reduction gear type** |
| **Rated output** | **12 V, 4.8 kW** |
| **Number of teeth of pinion** | **11** |
| **Module** | **3** |
| **Rotating direction** | **Clockwise (Seen from pinion side)** |

## DESCRIPTION

EN0110612C100001

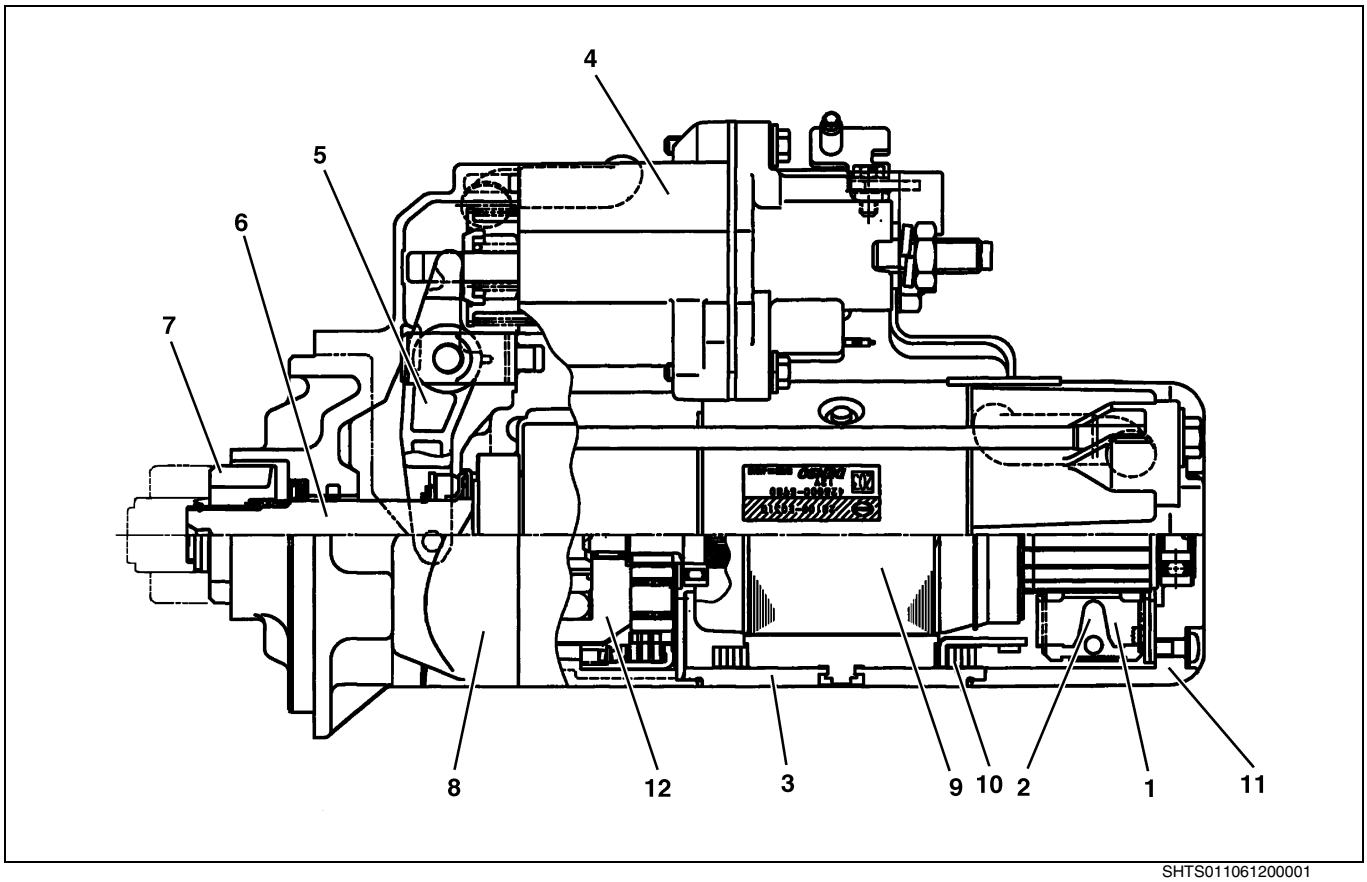


SHTS011061200001

| | | | |
|---|---|---|---|
| 1 | Holder assembly | 7 | Pinion gear |
| 2 | Brush | 8 | Drive housing assembly |
| 3 | Yoke assembly | 9 | Armature assembly |
| 4 | Magnetic switch assembly | 10 | Field coil |
| 5 | Lever | 11 | Commutator end frame |
| 6 | Drive shaft | 12 | Clutch assembly |

# TROUBLESHOOTING

EN0110612F300001

| Symptom | Possible cause | Remedy/Prevention |
|---|---|---|
| **Engine does not crank, or cranks slowly. (Starter switch)** | Poor contact | Replace the starter switch. |
| **Engine does not crank, or cranks slowly. (Battery)** | Discharged battery | Charge. |
| | Short circuited between electrodes | Replace battery. |
| | Poor contact at battery terminal | Clean or retighten. |
| **Engine does not crank, or cranks slowly. (Engine oil)** | Improper viscosity oil | Change oil. |
| **Engine does not crank, or cranks slowly. (Magnetic switch)** | Poor contact caused by burnt contact plate | Replace the magnetic switch assembly. |
| | Contact plate worn out | Replace the magnetic switch assembly. |
| | Holding coil disconnected (Overrunning clutch moves back and forth) | Replace the magnetic switch assembly. |
| | Pull-in coil disconnected or short circuited | Replace the magnetic switch assembly. |
| **Engine does not crank, or cranks slowly. (Starter relay)** | Defective or poor contact | Repair or replace the starter relay. |
| **Engine does not crank, or cranks slowly. (Starter)** | Brush worn out | Replace. |
| | Commutator burnt out | Replace the armature assembly. |
| | Commutator worn out | Replace the armature assembly. |
| | Field winding shorted or grounded | Replace the yoke assembly. |
| | Armature winding shorted or grounded | Replace the armature assembly. |
| | Insufficient brush spring tension | Replace the brush spring. |
| | Poor contact between magnetic switch and field windings | Repair. |
| | Armature contact pole core because of worn bearing bushing or bent armature shaft | Replace the end frame or armature assembly. |
| | Overrunning clutch malfunction | Replace. |
| **Engine does not crank while starter is running in good condition. (Overrunning clutch)** | Overrunning clutch malfunction | Replace. |
| | Pinion teeth worn out | Replace. |
| | Poor sliding of spline teeth | Remove foreign particles, dirt or replace. |
| **Starter does not stop running. (Starter switch)** | Contacts keep closing | Replace. |
| | Key switch sticks | Replace. |
| | Overrunning clutch sticks to armature | Repair or replace overrunning or armature. |
| **Starter does not stop running. (Starter relay)** | Contacts keep closing | Repair or replace. |

# COMPONENT LOCATOR

EN0110612D100001

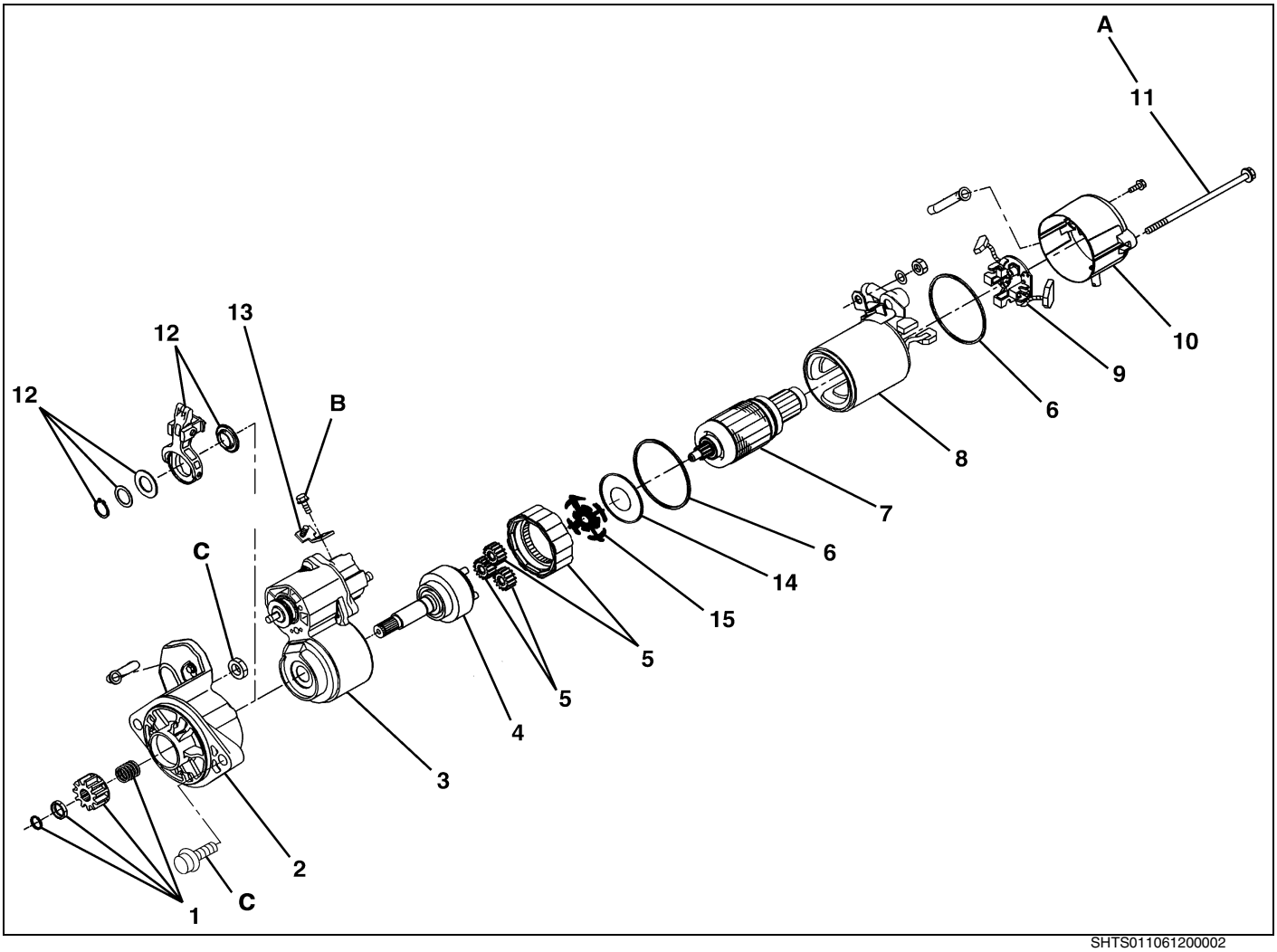


SHTS011061200002

| | | | |
|---|---|---|---|
| 1 | Pinion gear | 9 | Brush holder |
| 2 | Drive housing assembly | 10 | End frame |
| 3 | Main switch assembly | 11 | Through bolt |
| 4 | Clutch assembly | 12 | Lever assembly |
| 5 | Internal gear assembly | 13 | Terminal |
| 6 | O-ring | 14 | Cover |
| 7 | Armature assembly | 15 | Plate |
| 8 | Yoke assembly | | |

**Tightening torque** **Unit: N·m {kgf·cm, lbf·ft}**

| | | | |
|---|---|---|---|
| A | 17 {173, 12.5} | C | 139-169 {1,418-1,723, 103-124} |
| B | 21 {214, 15.5} | | |

# OVERHAUL

EN0110612H200001

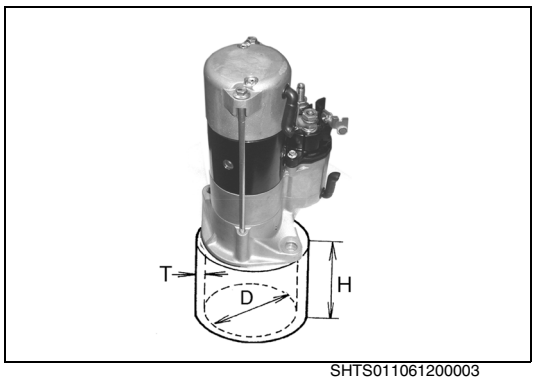

SHTS011061200003

## IMPORTANT POINTS - DISASSEMBLY

When disassembling the starter, prepare a work stand as shown in the figure.

**D: Diameter = 110 mm {4.331 in.}**
**T: Thickness = 10 mm {0.394 in.}**
**H: Height = 120 mm {4.724 in.}**

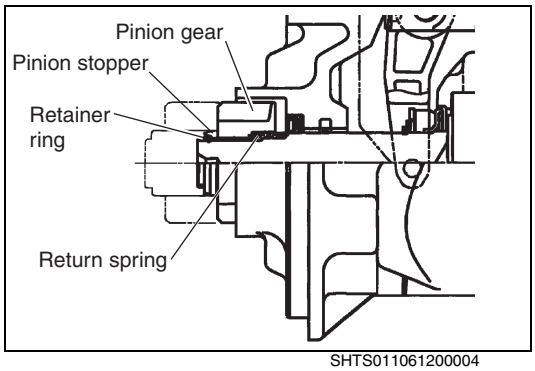

SHTS011061200004

**1. REMOVE THE PINION GEAR.**
(1) Remove the retainer ring.

**⚠ CAUTION**
**Wear a pair of safety goggles, because the retainer ring may spring out the groove at the time of removal.**

(2) Remove the pinion stopper.
(3) Remove the pinion gear.
(4) Remove the return spring.

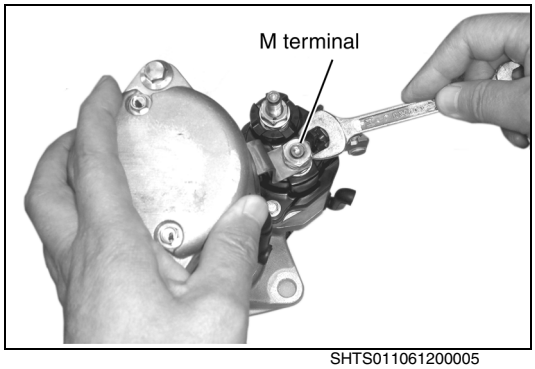

SHTS011061200005

**2. REMOVE THE TERMINAL LEAD.**
(1) Remove the nut, disconnect the "M" terminal lead.

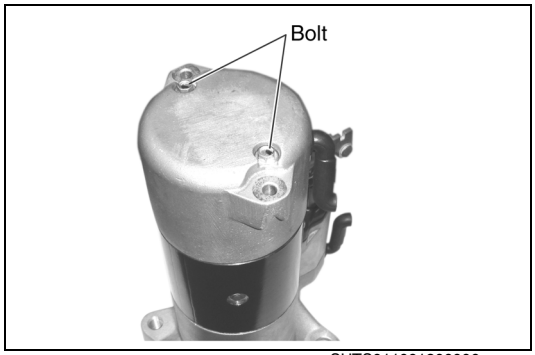

SHTS011061200006

**3. REMOVE THE COMMUTATOR END FRAME.**
(1) Remove the bolt.

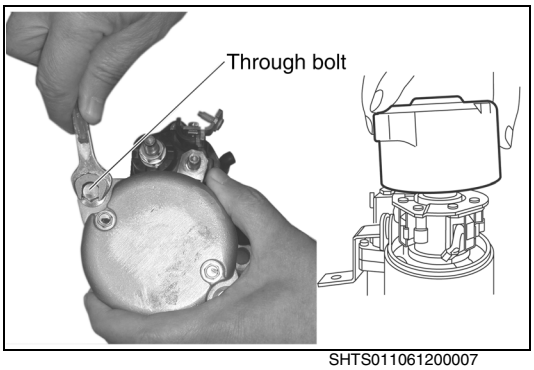

SHTS011061200007

(2) Remove the through bolt, remove the commutator end frame.

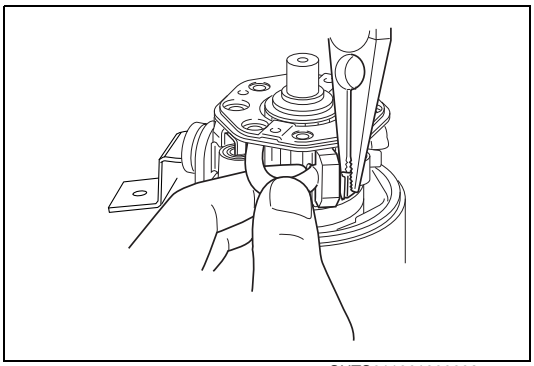
SHTS011061200008

**4. REMOVE THE HOLDER ASSEMBLY.**

(1) Using a long nose plier, remove the brush of the yoke from the holder.



SHTS011061200009

(2) Remove the holder assembly from the armature.

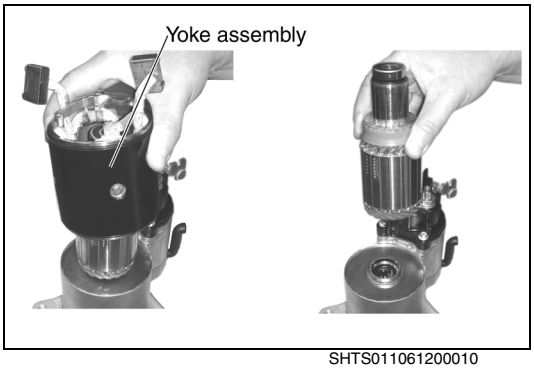

SHTS011061200010

**5. REMOVE THE YOKE ASSEMBLY AND ARMATURE ASSEMBLY.**

(1) Remove the yoke assembly and armature assembly from the center bracket assembly.

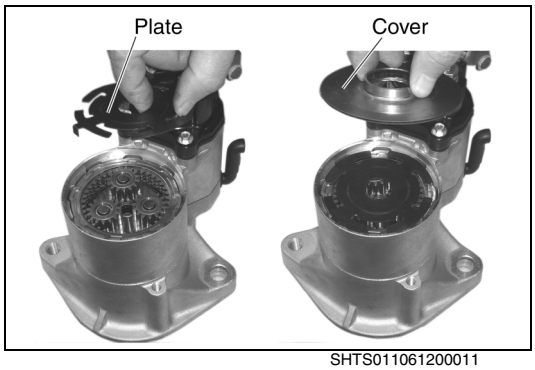

SHTS011061200011

**6. REMOVE THE GEAR.**
(1) Remove the cover and plate.

**NOTICE**
**Remember the assembled position and direction of the plate.**

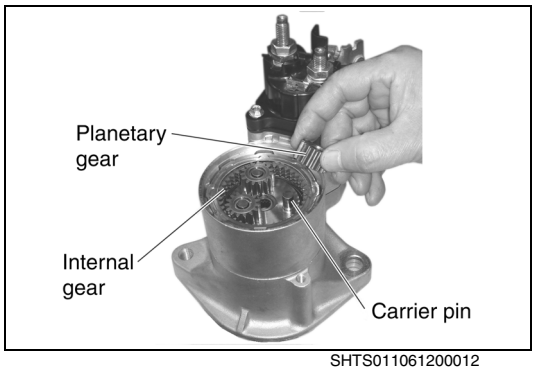

SHTS011061200012

(2) Remove the planetary gear.
(3) Remove the internal gear.

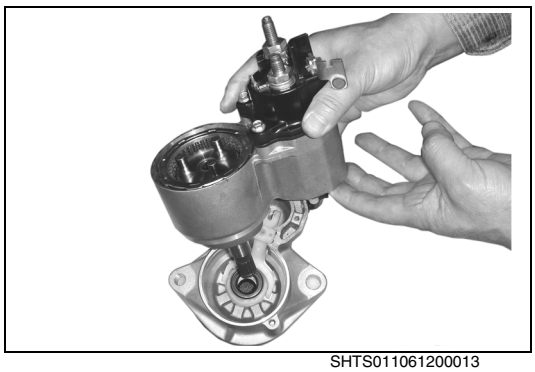
SHTS011061200013

**7. REMOVE THE DRIVE HOUSING ASSEMBLY.**
(1) Remove the bolt, remove the drive housing assembly.

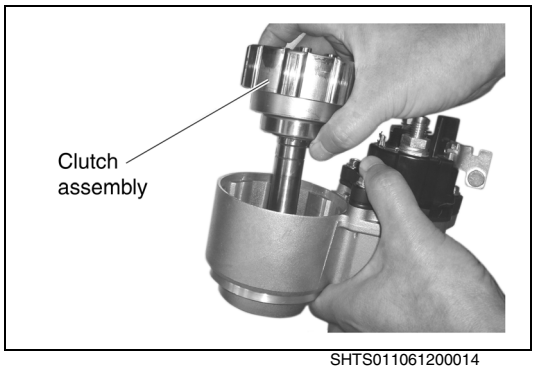

SHTS011061200014

**8. REMOVE THE CLUTCH ASSEMBLY.**
(1) Remove the retainer ring.
(2) Pushing the clutch assembly toward yoke assembly.
(3) Remove the clutch assembly.

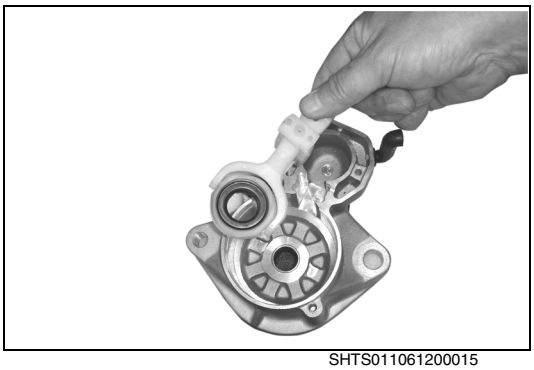
SHTS011061200015

**9. REMOVE THE LEVER.**
(1) Remove the lever assembly.

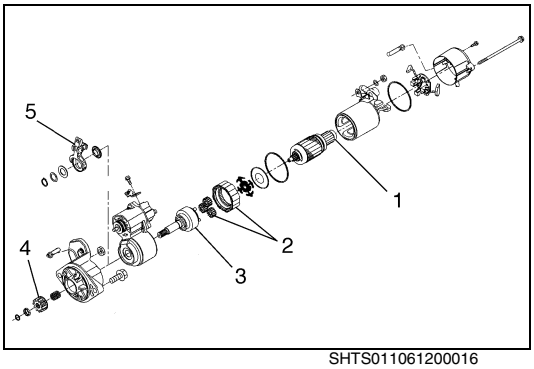

SHTS011061200016

## IMPORTANT POINTS - ASSEMBLY

**NOTICE**
**Reverse the order of disassembly to reassemble the starter.**

**1. LUBRICATION**

(1) Before reassembling, apply the recommended grease to the following: [Apply Nippondenso No. HL50 grease (Shin-nisseki U3311 grease)] or equivalent.
- **(1) Front bearing**
- **(2) Internal gear assembly**
- **(3) Clutch assembly (Excluding the clutch roller.)**
- **(4) Pinion gear**
- **(5) Lever assembly**

## IMPORTANT POINTS - INSPECTION

**NOTICE**
**These tests must be performed within 3 to 5 seconds to avoid burning out the coil.**

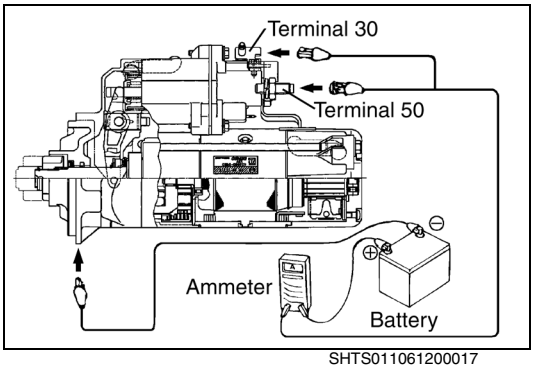

SHTS011061200017

**1. PERFORM NO-LOAD PERFORMANCE TEST.**
(1) Connect battery and ammeter to the starter as shown.
(2) Check that the starter rotates smoothly and steadily with the pinion gear moving out. Check the reading on the ammeter.

**Standard amperage:**
**220 A or less/11 V**

# INSPECTION AND REPAIR

EN0110612H300001

**Unit: mm {in.}**

| Inspection item | Standard | Limit | Remedy | Inspection procedure |
|---|---|---|---|---|
| **Continuity between the segments of the commutator** | **1 Ω or less** | **1 Ω** | **Replace.** | **Measure** 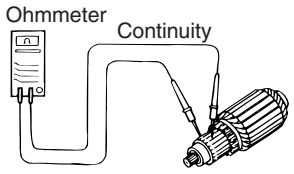  |
| **No continuity between the connector and armature coil core.** | **10 kΩ or more** | **10 kΩ** | **Replace.** | **Measure** 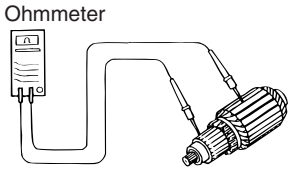  |
| **Armature short circuit test (Using a growler tester)** | **If the iron piece does not vibrate, the armature is good.** | **—** | **Replace.** | **Measure** 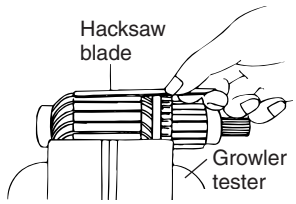  |
| **Measure the circle run-out** | **—** | **0.05 {0.0020}** | **Replace.** | **Measure** 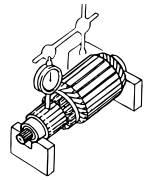 |
| **Outside diameter of the commutator** | **34.0 {1.338}** | **33.0 {1.299}** | **Replace.** | **Measure** 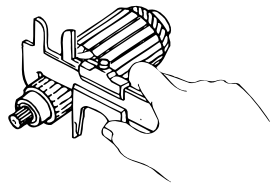 |
| **Depth between the mica and the commutator (Under cut depth)** | **0.7 {0.028}** | **0.2 {0.008}** | **Replace or repair.** | **Measure** 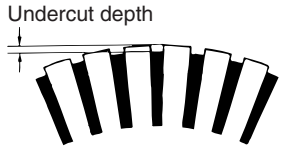  |

| Inspection item | Standard | Limit | Remedy | Inspection procedure |
|---|---|---|---|---|
| **Continuity between the field coil end and the read wire.** | **1 Ω or less** | **1 Ω** | **Replace.** | **Measure** 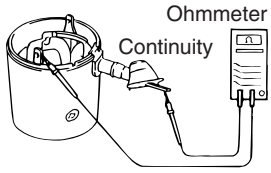  |
| **No continuity between the field coil end and yoke out side** | **10 kΩ or more** | **10 kΩ** | **Replace.** | **Measure** 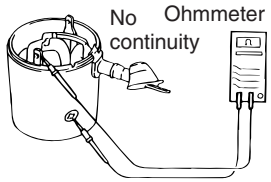  |
| **Brush length** | **20.5 {0.807}** | **11 {0.433}** | **Replace.** | **Measure** 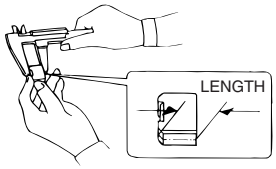  |
| **Brush spring load** | **45 N {162 oz}** | **17 N {61.20 oz}** | **Replace.** | **Measure**  |
| **Insulation between the brush and brush holder** | **10 kΩ or more** | **10 kΩ** | **Replace.** | **Measure** 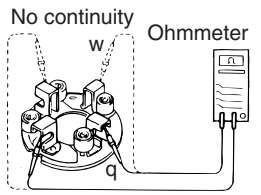  |
| **Rotating of pinion** | **—** | **—** | **Replace.** | **Visual check**   |
| **Rotating of needle roller front bearing** | **—** | **Sticks or does not rotate** | **Replace.** | **Visual check** 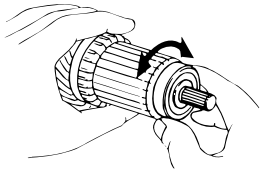 |

| Inspection item | Standard | Limit | Remedy | Inspection procedure |
|---|---|---|---|---|
| **Rotating of needle roller rear bearing** | **—** | **Sticks or does not rotate** | **Replace.** | **Visual check** 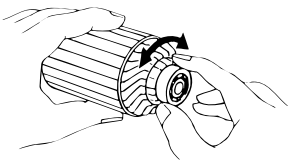 |
| **Continuity between terminals 50 and C** | **1 Ω or less** | **1 Ω** | **Replace.** | **Measure** 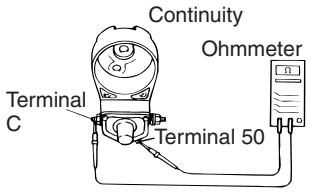  |
| **Continuity between terminal 50 and the switch body** | **2 Ω or less** | **2 Ω** | **Replace.** | **Measure** 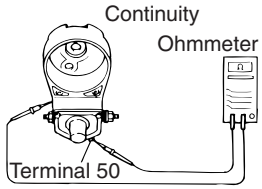  |

# AIR COMPRESSOR (J08E: 340 cm3)

EN13-001

**AIR COMPRESSOR..... EN13-2**
DATA AND SPECIFICATIONS ..... EN13-2
DESCRIPTION ..... EN13-3
TROUBLESHOOTING..... EN13-4
COMPONENT LOCATOR..... EN13-5
SPECIAL TOOL ..... EN13-6
OVERHAUL ..... EN13-6
INSPECTION AND REPAIR ..... EN13-14

# AIR COMPRESSOR

## DATA AND SPECIFICATIONS

EN0110613I200001

| | |
|---|---|
| **Type** | **Reciprocating, single cylinder** |
| **Discharge amount** | **340 $cm^3$ {20.7 cu.in.}** |
| **Bore x stroke** | **85 mm x 60 mm {3.35 in. x 2.36 in.}** |
| **Lubrication system** | **Forced feed lubrication** |
| **Cooling system** | **Forced water-circulated** |

# DESCRIPTION

EN0110613C100001

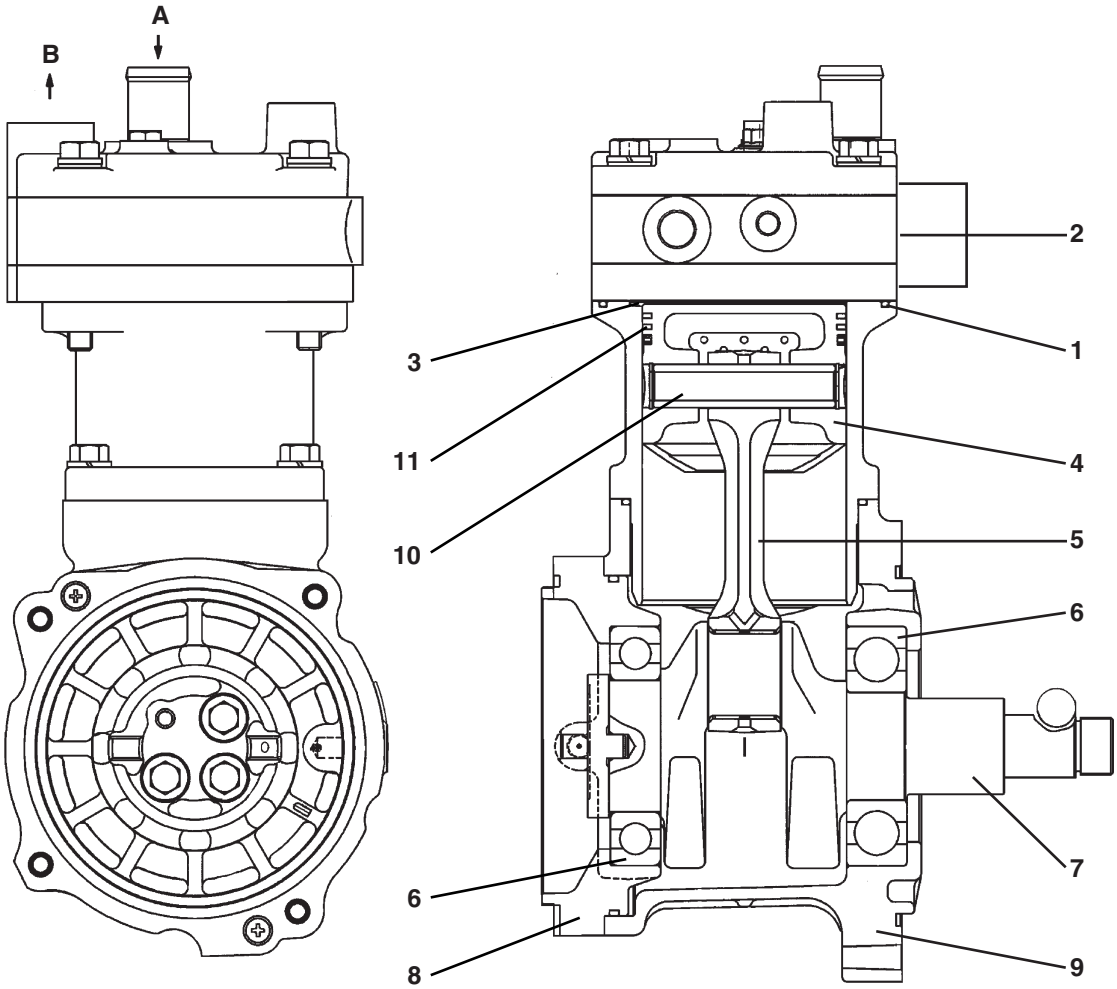


SAPH011061300001

| | | | |
|---|---|---|---|
| 1 | O-ring * | 8 | Bearing holder |
| 2 | Cylinder head assembly | 9 | Crankcase |
| 3 | Suction valve * | 10 | Piston pin |
| 4 | Piston | 11 | Piston ring |
| 5 | Connecting rod | A | Suction |
| 6 | Bearing | B | Delivery |
| 7 | Crankshaft | | |

*** Nonreusable part**

# TROUBLESHOOTING

EN0110613F300001

| Symptom | Possible cause | Remedy/Prevention |
|---|---|---|
| **Charging efficiency dropped (Valve)** | Abnormal wear, damage, or poor contact | Replace. |
| **Charging efficiency dropped (Piston, cylinder liner and piston rings)** | Worn piston and cylinder liner | Replace. |
| | Seized piston | Replace (piston, piston rings and cylinder liner). |
| | Worn or broken piston ring | Replace. |
| **Charging efficiency dropped (Air pipe and joints)** | Leakage of high-pressure air | Replace or tighten pipe joint. |
| | Clogged air pipe | Replace. |
| **Charging efficiency dropped (Air cleaner)** | Clogged element | Clean or replace element. |
| **Noisy operation (Piston)** | Wear of piston pin boss or piston pin | Replace. |
| | Seized, damaged or worn connecting rod small end | Replace. |
| | Worn piston or cylinder liner | Replace. |
| | Damaged or seized piston | Replace. |
| | Foreign particles on the top surface of piston | Clean or replace. |
| **Noisy operation (Bearing)** | Damaged, or worn ball bearing and/or connecting rod bearing | Replace. |
| **Excessive carbon or oil in the compressor cylinder head or discharge line (Piston ring)** | Worn, sticking or broken piston rings | Replace piston rings and/or cylinder liner. |
| | Insufficient piston ring tension | Replace piston rings and/or cylinder liner. |
| | Malfunction of piston rings | Replace piston rings and/or cylinder liner. |
| **Excessive carbon or oil in the compressor cylinder head or discharge line (Cylinder liner and piston rings)** | Worn cylinder liner and piston rings | Replace. |

# COMPONENT LOCATOR

EN0110613D100001

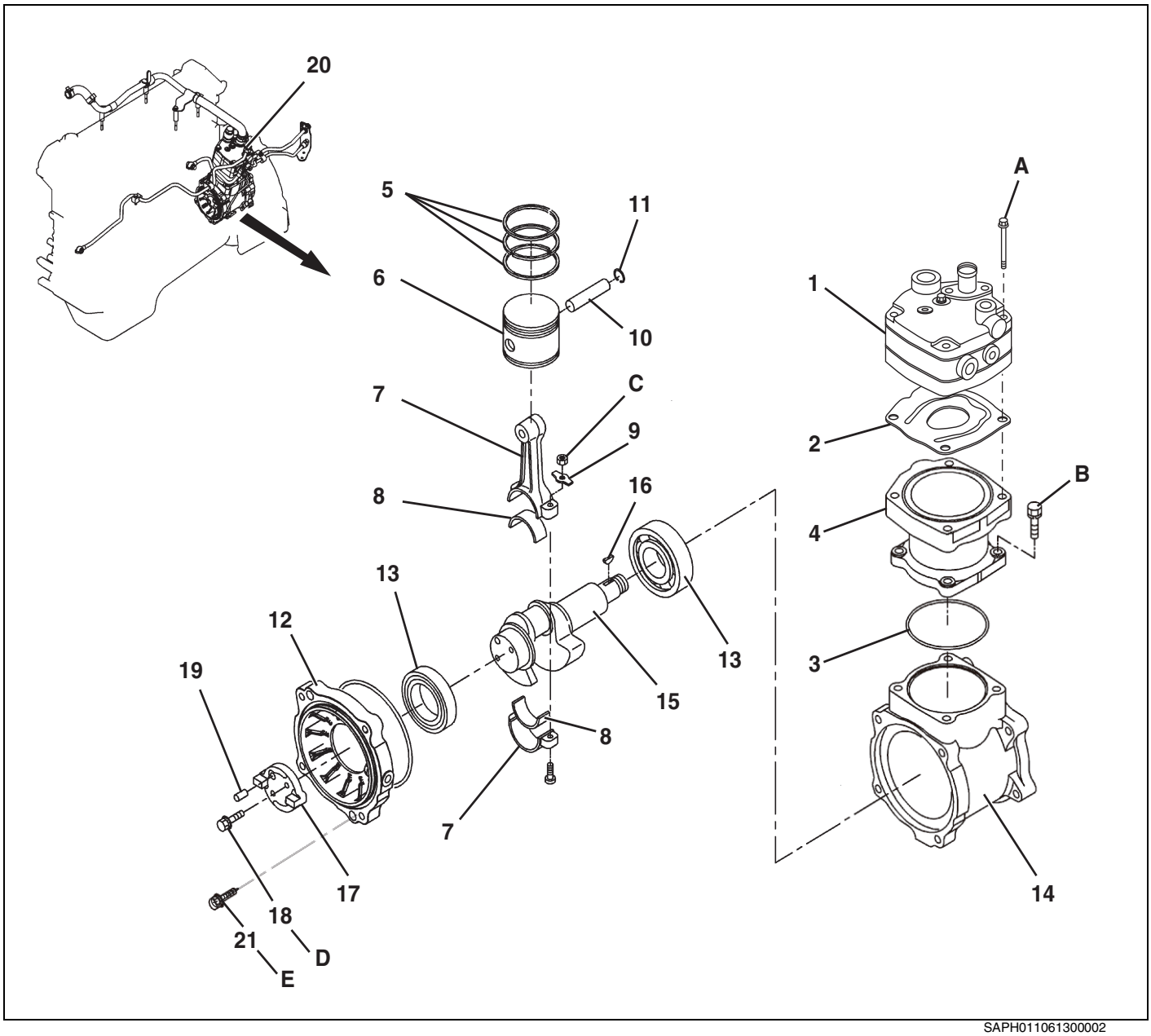


SAPH011061300002

| | | | |
|---|---|---|---|
| 1 | Cylinder head assembly ** | 14 | Crankcase |
| 2 | Suction valve * | 15 | Crankshaft |
| 3 | O-ring * | 16 | Woodruff key |
| 4 | Cylinder liner | 17 | Coupling |
| 5 | Piston ring | 18 | Coupling bolt |
| 6 | Piston | 19 | Pin |
| 7 | Connecting rod | 20 | Air compressor assembly |
| 8 | Connecting rod bearing | 21 | Screw |
| 9 | Lock washer * | | |
| 10 | Piston pin | | |
| 11 | Retainer ring * | | |
| 12 | Bearing holder | | |
| 13 | Ball bearing | | |

*** Nonreusable part. ** Do not decompose the cylinder head assembly.**

**Tightening torque** **Unit: N·m {kgf·cm, lbf·ft}**

| | | | |
|---|---|---|---|
| A | 29-34 {296-347, 22-25} | D | 30-36 {305-367, 22-27} |
| B | 25-29 {255-295, 19-21} | E | 2.5-3.9 {26-39, 1.9-2.8} |
| C | 23-26 {235-265, 17-19} | | |

# SPECIAL TOOL

EN0110613K100001

Prior to starting an air compressor overhaul, it is necessary to have these special tools.

| Illustration | Part number | Tool name | Remarks |
|---|---|---|---|
| 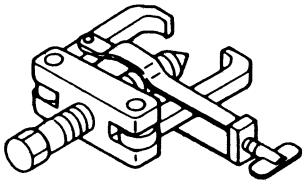 | S0965-01101 | BEARING PULLER | |
| 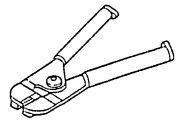 | S0944-01060 | PISTON RING EXPANDER | |

# OVERHAUL

EN0110613H200001

## IMPORTANT POINTS - DISMOUNTING

**1. REMOVE THE SUPPLY PUMP**

(1) Refer to the chapter "**FUEL SYSTEM**".

**2. REMOVE THE AIR COMPRESSOR.**

(1) Remove the six air compressor mounting bolts and remove the air compressor without applying excessive force.

**NOTICE**

**Excessive force to the air compressor may damage the mounting spigot or may cause oil leakage due to flaking of liquid gasket between the flywheel housing and plate.**

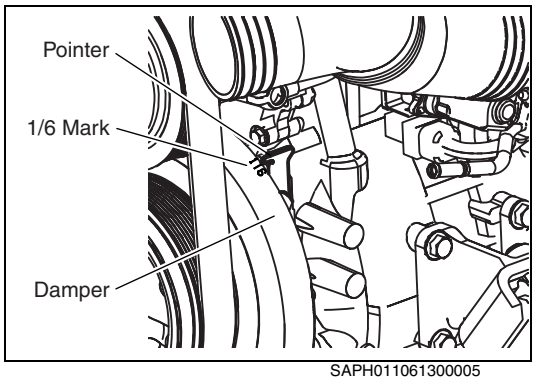

SAPH011061300005

## IMPORTANT POINTS - MOUNTING

**1. INSTALLATION PROCEDURES**

(1) Fit the No.1 cylinder to the Top Dead Center.

**NOTICE**

**Refer to the section "ENGINE TUNEUP" in the chapter "ENGINE INTRODUCTION".**

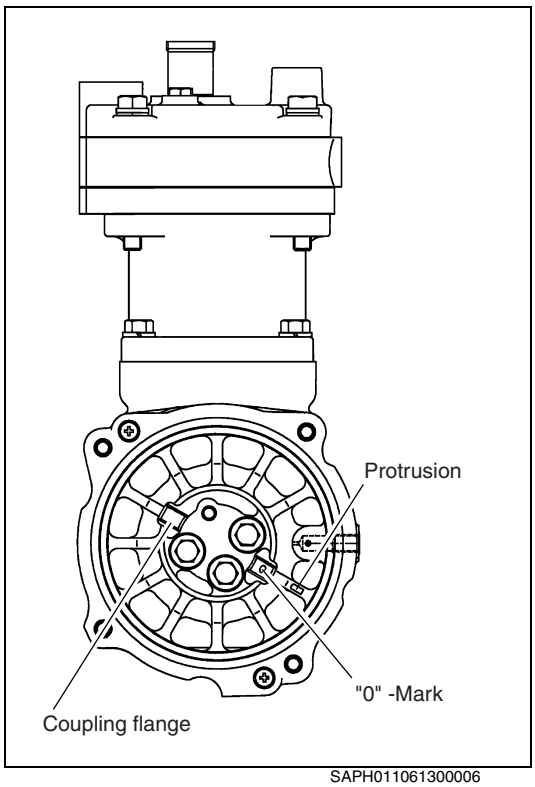

SAPH011061300006

(2) Align the aligning mark "0" on the top of coupling flange with protrusion on the compressor housing.

(3) Insert the O-ring in to the O-ring groove of the air compressor of bearing holder side.

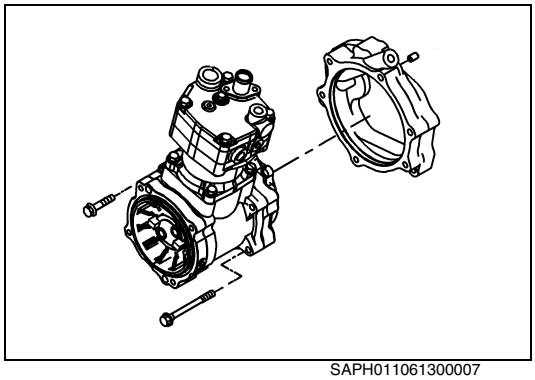
SAPH011061300007

(4) Place a guide stud bolt (M8 x 1.25, length: 50 mm {1.968 in.} or more) in the flywheel housing as shown in the figure and insert the compressor onto the stud bolt.

(5) Tighten the mounting bolts (other than the stud bolt) then remove the stud bolt. Insert a bolt in the place of the stud bolt.

**Tightening Torque:**
**28.5 N·m {290 kgf·cm, 20 lbf·ft}**

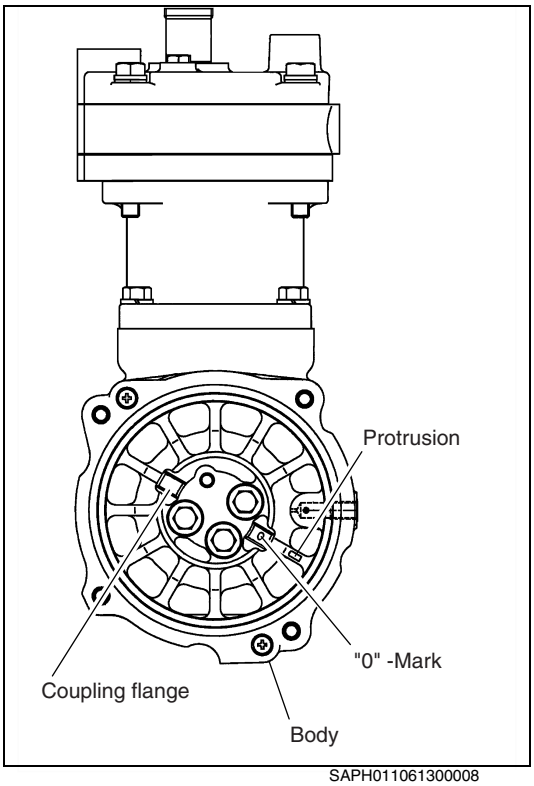

SAPH011061300008

(6) Make sure that the aligning mark "0" on the top of coupling flange is aligned with protrusion on the compressor housing.

**2. INSTALL THE SUPPLY PUMP AND AIR COMPRESSOR.**

(1) Refer to the chapter **"FUEL SYSTEM"**.

## IMPORTANT POINTS - DISASSEMBLY

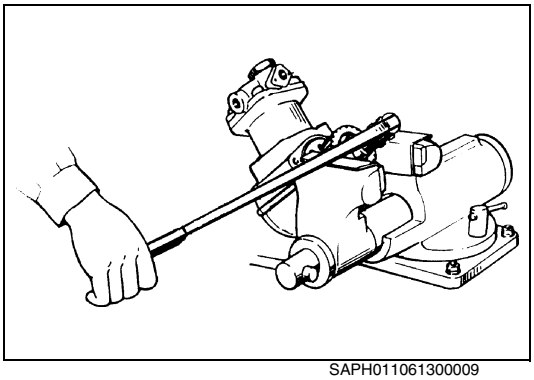
SAPH011061300009

**1. REMOVE THE DRIVE GEAR.**

(1) Remove the lock nut from the compressor drive gear.

**NOTICE**

**If the spread is insufficient, the drive gear will be damaged when loosing the nut.**

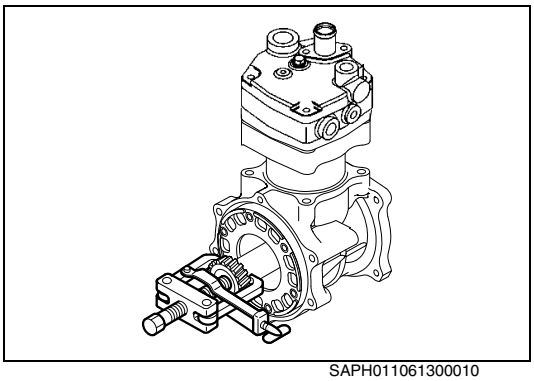
SAPH011061300010

(2) Pull the drive gear from the crankshaft, then remove the woodruff key.
**SST: Bearing puller (S0965-01101)**

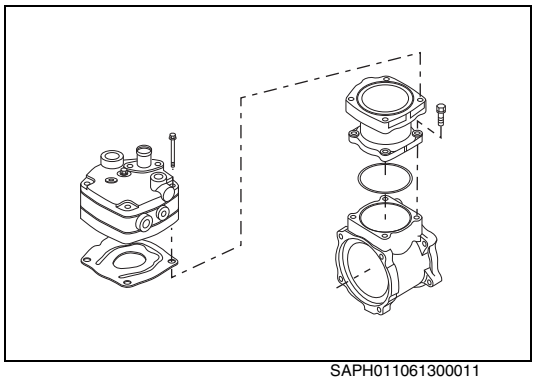
SAPH011061300011

**2. REMOVE THE CYLINDER HEAD ASSEMBLY, ASSEMBLY AND O-RING.**

(1) Remove the cylinder head assembly, assembly and O-ring.

**NOTICE**

- **Put the marking through the head cover to the cylinder liner.**
- **Do not decompose the cylinder head assembly.**

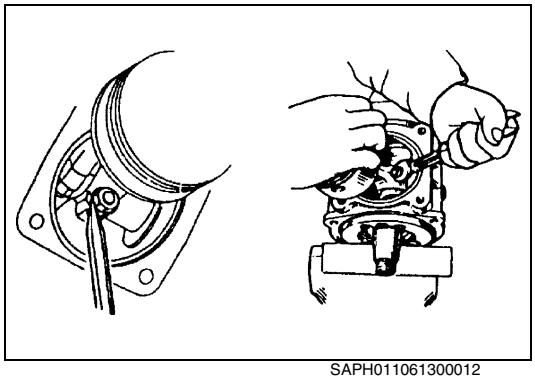
SAPH011061300012

**3. REMOVE THE CONNECTING ROD WITH THE PISTON.**

(1) Rotate the crankshaft to the top dead center position.
(2) Spread the staking of the nut completely with a chisel, then loosen the nut.
(3) Remove the connecting rod with piston.

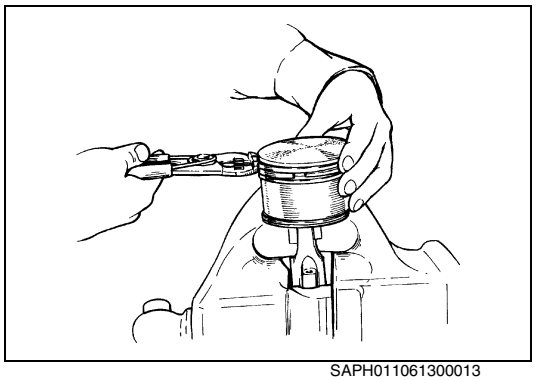
SAPH011061300013

**4. REMOVE THE PISTON RINGS.**

(1) Remove the piston rings.
**SST: Piston ring expander (S0944-01060)**

**NOTICE**

- **Handle the piston rings carefully because they are made of a special casting which is easily broken.**
- **When reusing the piston rings, first arrange them face up and in the correct installation sequence in order to prevent installing them incorrectly.**

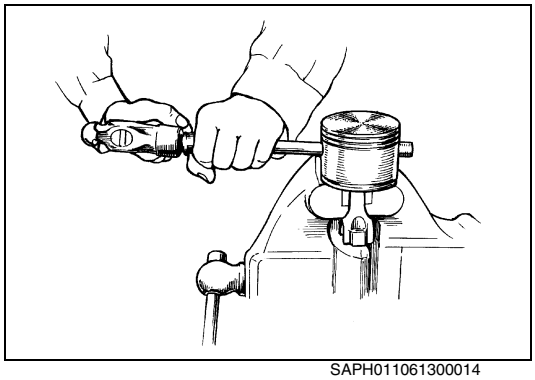
SAPH011061300014

**5. REMOVE THE PISTON.**

(1) Remove the retainer rings installed on both ends of the piston, using retainer ring pliers.

**⚠ WARNING**
**Wear a pair of safety goggles, because the retainer rings may spring out the groove at the time of removal.**

(2) Strike out the piston pin.

**NOTICE**
**Warm up the piston first in hot water, 80-90°C {176-194°F}, for approximately 5 minutes before removing the piston pin.**

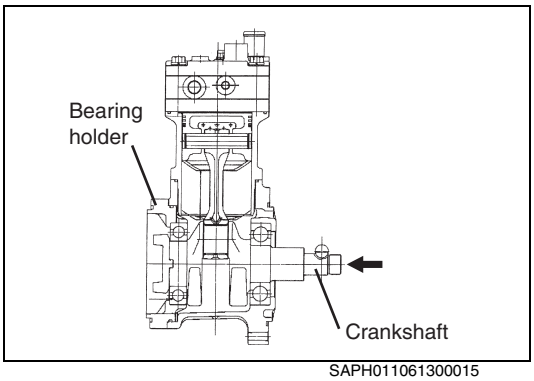

SAPH011061300015

**6. REMOVE THE CRANKSHAFT.**
(1) Remove the bearing holder fitting screw.
(2) Use the press to remove the crankshaft together with the bearing holder.

**NOTICE**
**Be careful not to damage the bearing holder.**

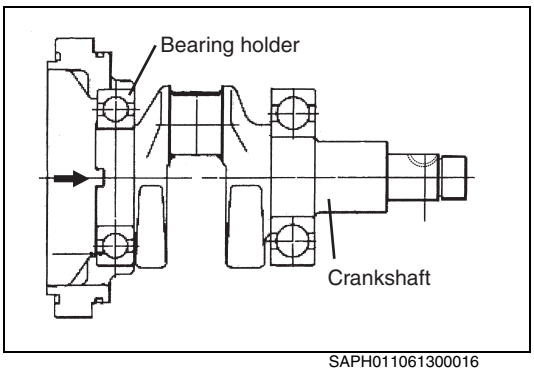

SAPH011061300016

**7. REMOVE THE BEARING HOLDER.**
(1) Use the press to remove the bearing holder.

**NOTICE**
**Be careful not to damage the bearing holder.**

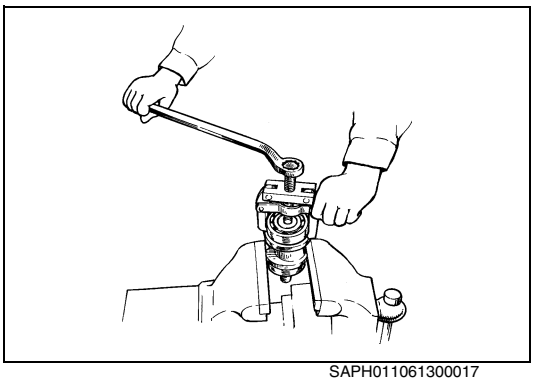
SAPH011061300017

**8. REMOVE THE BALL BEARING.**
(1) Using the special tool, remove the ball bearing from the end of the crankshaft.
**SST: Bearing puller (S0965-01101)**

## IMPORTANT POINTS - ASSEMBLY

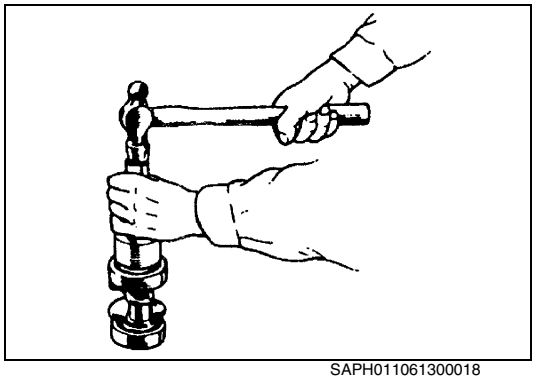
SAPH011061300018

**1. INSTALL THE BALL BEARING.**

(1) Install the ball bearing onto the both ends of the crankshaft.

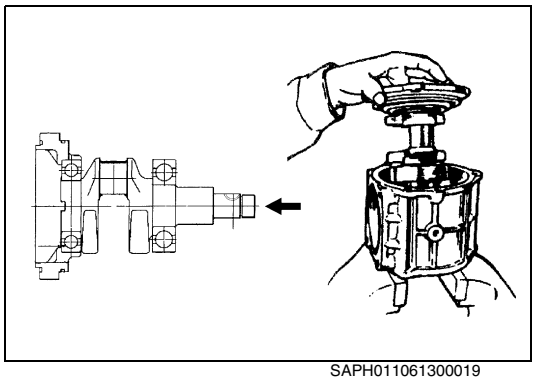
SAPH011061300019

**2. INSTALL THE CRANKSHAFT.**

(1) Using the press, install the crankshaft to the bearing holder.
(2) Install the crankshaft and bearing holder into the crankcase.
(3) Tighten the bearing holder fitting screw.

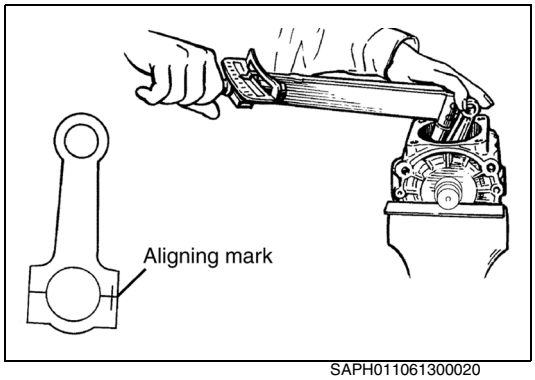

SAPH011061300020

**3. INSTALL THE CONNECTING ROD AND MEASURE THE END PLAY.**

**NOTICE**

- **Be sure to align the aligning mark.**
- **Apply engine oil to the connecting rod and cap.**

(1) Apply engine oil to the thread before installing the connecting rod bolt.

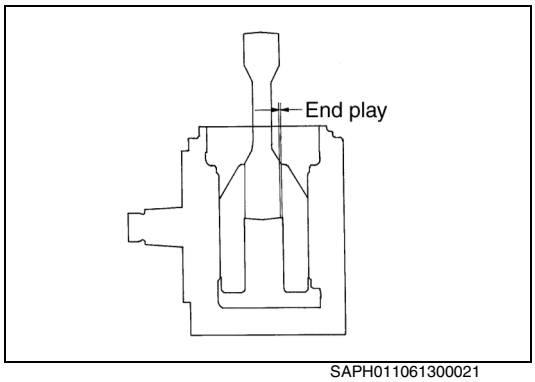

SAPH011061300021

(2) Measure the connecting rod end play.
**Assembly standard: 0.2-0.4 mm {0.008-0.015 in.}**
**Limit: 0.5 mm {0.02 in.}**

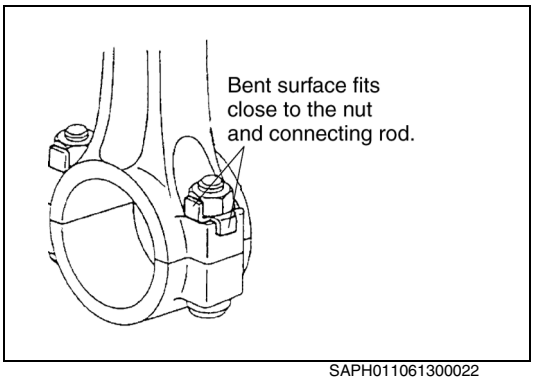

SAPH011061300022

(3) Lock the nut with a lock washer.

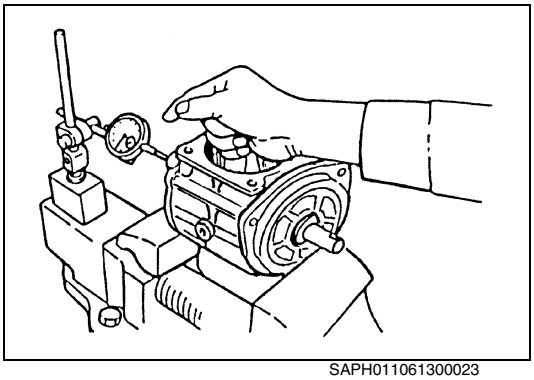
SAPH011061300023

**4. MEASURE THE END PLAY OF THE CRANKSHAFT.**
**Assembly standard: 0-0.6 mm {0-0.0236 in.}**
**Limit: 1.0 mm {0.0394 in.}**

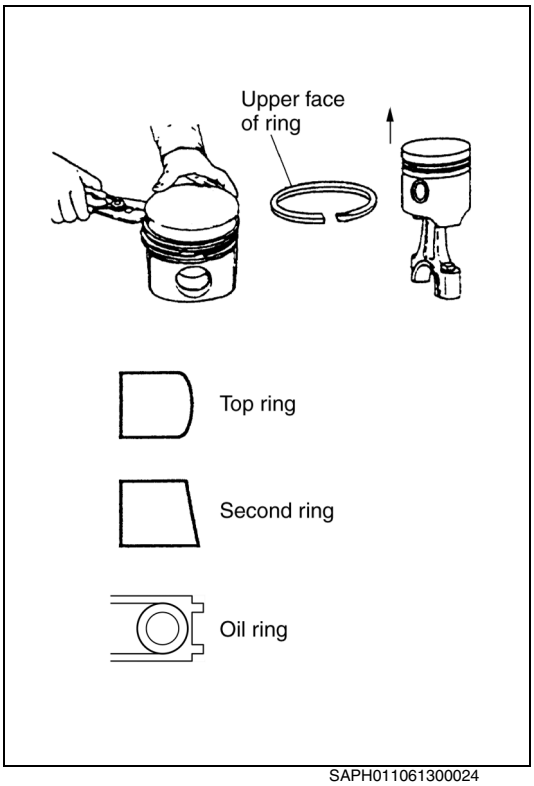

SAPH011061300024

**5. ASSEMBLE THE PISTON.**

**NOTICE**
**Assemble the various parts after applying engine oil to the sliding parts.**

(1) When installing the piston rings on the piston, ensure that the piston skirt is at the bottom, and use the special tool.
**SST: Piston ring expander (S0944-01060)**

**NOTICE**
**Install the piston rings in order shown in the figure.**

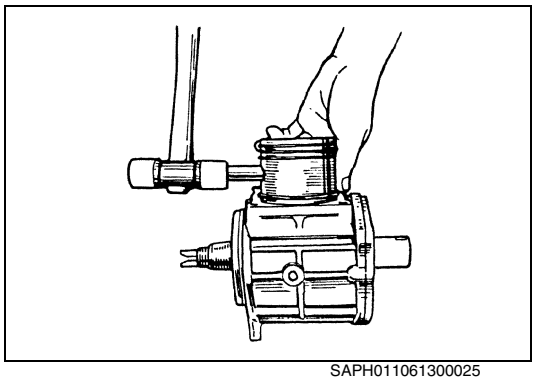
SAPH011061300025

**6. ASSEMBLE THE PISTON AND CONNECTING ROD.**

**NOTICE**

**Warm up the piston first in hot water, to 80-90°C {176-194°F}, for approximately 5 minutes.**

(1) Install the retainer ring at one end of the piston pin holes.
(2) Apply engine oil to the piston pin.
(3) Fix the piston and connecting rod by inserting the pin.
(4) Fit the new retainer ring at the other end.

**⚠ CAUTION**

**The retainer ring may spring out of the groove during assembly. Wear a pair of safety goggles during assembly.**

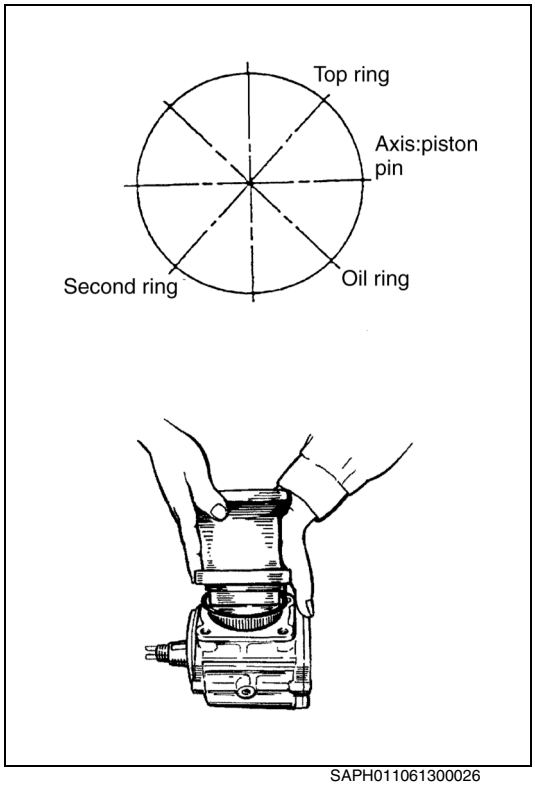

SAPH011061300026

**7. INSTALL THE CYLINDER LINER AND CYLINDER HEAD.**

**NOTICE**

**Do not twist the O-ring when installing it on the cylinder liner and cylinder head assembly.**

(1) Rotate the crankshaft to the top dead center position.
(2) Arrange the piston rings so that their gaps are equally spaced.
(3) Install the cylinder liner and cylinder head assembly.
**Tightening Torque:**
**Cylinder liner: 25-29 N·m {255-295 kgf·cm, 19-21 lbf·ft}**
**Cylinder head: 29-34 N·m {295-347 kgf·cm, 21-25 lbf·ft}**

**8. INSTALL THE DRIVE GEAR.**

(1) Install the woodruff key to the crankshaft.
(2) Insert the drive gear.
(3) Insert the collar and lock nut.
**Tightening Torque:**
**353 N·m {3,600 kgf·cm, 260 lbf·ft}**

**NOTICE**

**Apply oil to the threads and seat surface before tightening.**

# INSPECTION AND REPAIR

EN0110613H300001

Unit: mm {in.}

| Inspection item | Standard | Limit | Remedy | Inspection procedure |
|---|---|---|---|---|
| Cracks or defects of the connecting rod | — | — | Replace. | Visual check 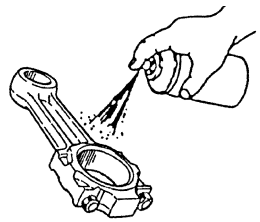 |
| Outside diameter of piston pin | 18 {0.709} | — | Replace. | Measure 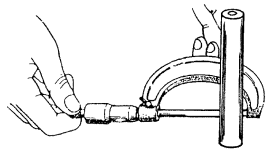 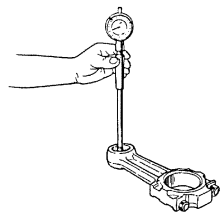 |
| Clearance between the piston pin and connecting rod | 0.016-0.044 {0.0007-0.0017} | 0.07 {0.0028} | | |
| Inside diameter of the connecting rod (Tighten the bearing cap to the specified torque.) | 34 {1.339} | — | Replace. | Measure 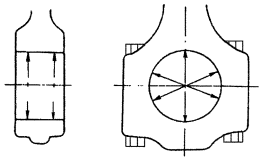 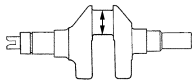 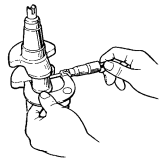 |
| Outside diameter of the crank pin | 34 {1.339} | — | | |
| Oil clearance between the connecting rod and the crank pin | 0.025-0.075 {0.0010-0.0029} | 0.1 {0.0039} | | |
| Connecting rod end play | 0.2-0.4 {0.0079-0.0157} | 0.5 {0.0197} | Replace connecting rod or crankshaft. | Measure 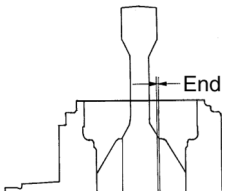  |

| Inspection item | | Standard | Limit | Remedy | Inspection procedure |
|---|---|---|---|---|---|
| Damage and scratches of the cylinder liner | | — | — | Replace. | Visual check 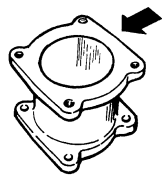 |
| Outside diameter of the piston | | 85 {3.346} | — | Replace. | Measure 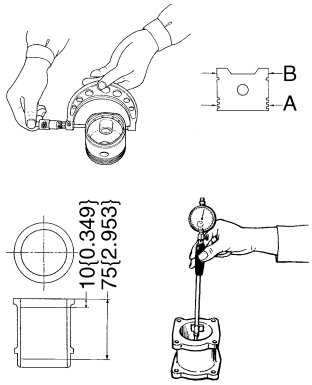  |
| Inside diameter of the cylinder liner | | 85 {3.346} | — | | |
| Clearance between the piston and the cylinder liner | | A: 0.23-0.295 {0.0091-0.0116} | 0.335 {0.0132} | | |
| | | B: 0.09-0.155 {0.0036-0.0061} | 0.195 {0.0077} | | |
| Clearance between the piston pin hole and the piston pin | | 0-0.028 {0-0.0011} | 0.08 {0.0031} | Replace. | Measure 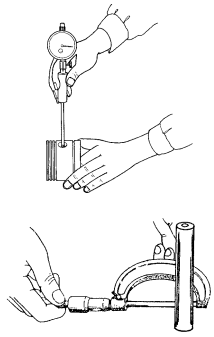 |
| Outer diameter of the piston pin | | 18 {0.709} | — | | |
| Piston ring thickness | Compression ring | 2.0 {0.0787} | — | Replace. | Measure 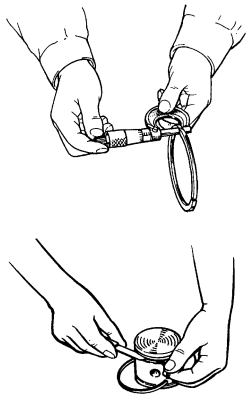 |
| | Oil ring | 4.0 {0.1575} | — | | |
| Piston ring groove | Compression ring | 2.0 {0.0787} | — | | |
| | Oil ring | 4.0 {0.1575} | — | | |
| Clearance between the ring groove and the compression ring | | 0.01-0.045 {0.0004-0.0017} | 0.08 {0.0031} | | |

| Inspection item | | Standard | Limit | Remedy | Inspection procedure |
|---|---|---|---|---|---|
| Gap between ends of piston ring | Top | 0.1-0.3 {0.0040-0.0118} | 1.0 {0.0394} | Replace. | Measure 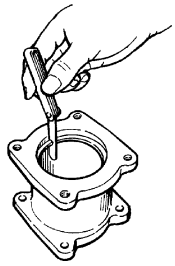 |
| | 2nd | 0.35-0.55 {0.0137-0.0216} | 1.0 {0.0394} | | |
| | Oil | 0.2-0.4 {0.0079-0.0157} | 1.0 {0.0394} | | |
| Worn or damaged bearing | | — | — | Replace. | Visual check 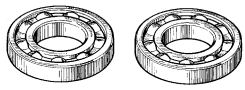 |
| Worn or damaged cylinder head assembly | | — | — | Replace. | Visual check 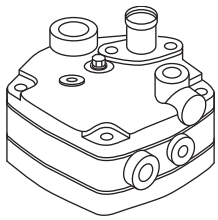 |
| Worn or damaged suction valve | | — | — | Replace. | Visual check 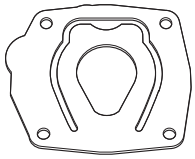 |
| Outside diameter of the crankshaft journal | Drive gear side | 45 {1.7716} | 44.995 {1.7714} | Replace. | Measure 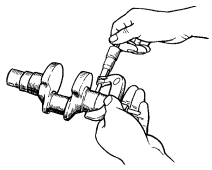 |
| | Opposite drive gear side | 55 {2.1654} | 54.995 {2.1651} | | |
| Inside diameter of the bearing holder | Cylinder block | 100 {3.9370} | 100.04 {3.9385} | Replace. | Measure 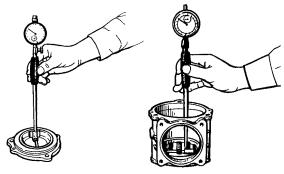 |
| | Bearing holder | 100 {3.9370} | 100.04 {3.9385} | | |
| Crankshaft end play | | 0-0.6 {0-0.0236} | 1.0 {0.0394} | Replace crankshaft and/or ball bearing. | Measure 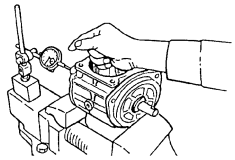 |

# ENGINE CONTROL (J08E)

EN16-001

**ACCELERATOR PEDAL..... EN16-2**
DESCRIPTION ..... EN16-2

**ENGINE ECU ..... EN16-3**
COMPONENT LOCATOR..... EN16-3
REPLACEMENT ..... EN16-4

# ACCELERATOR PEDAL

## DESCRIPTION

EN0110616F200001

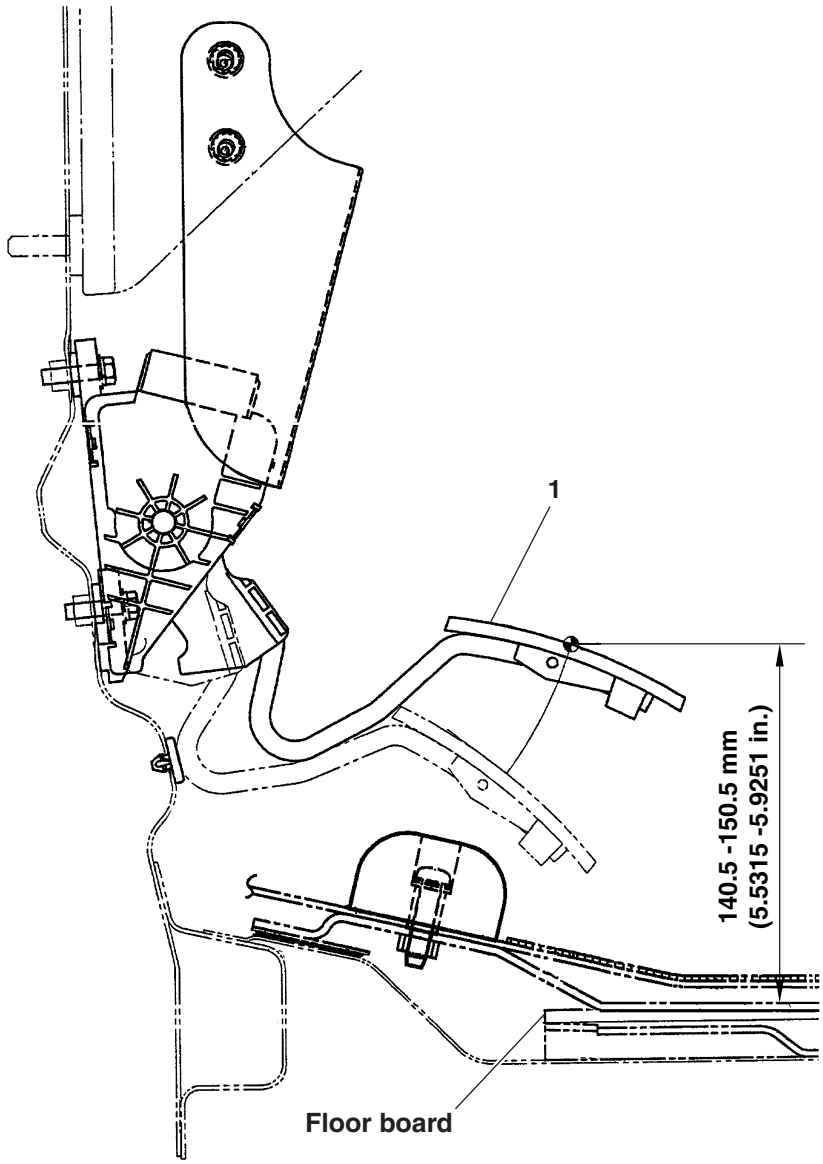


SAPH011061600001

| | |
|---|---|
| 1 Accelerator pedal assy | |

# ENGINE ECU

## COMPONENT LOCATOR

EN0110616J100001

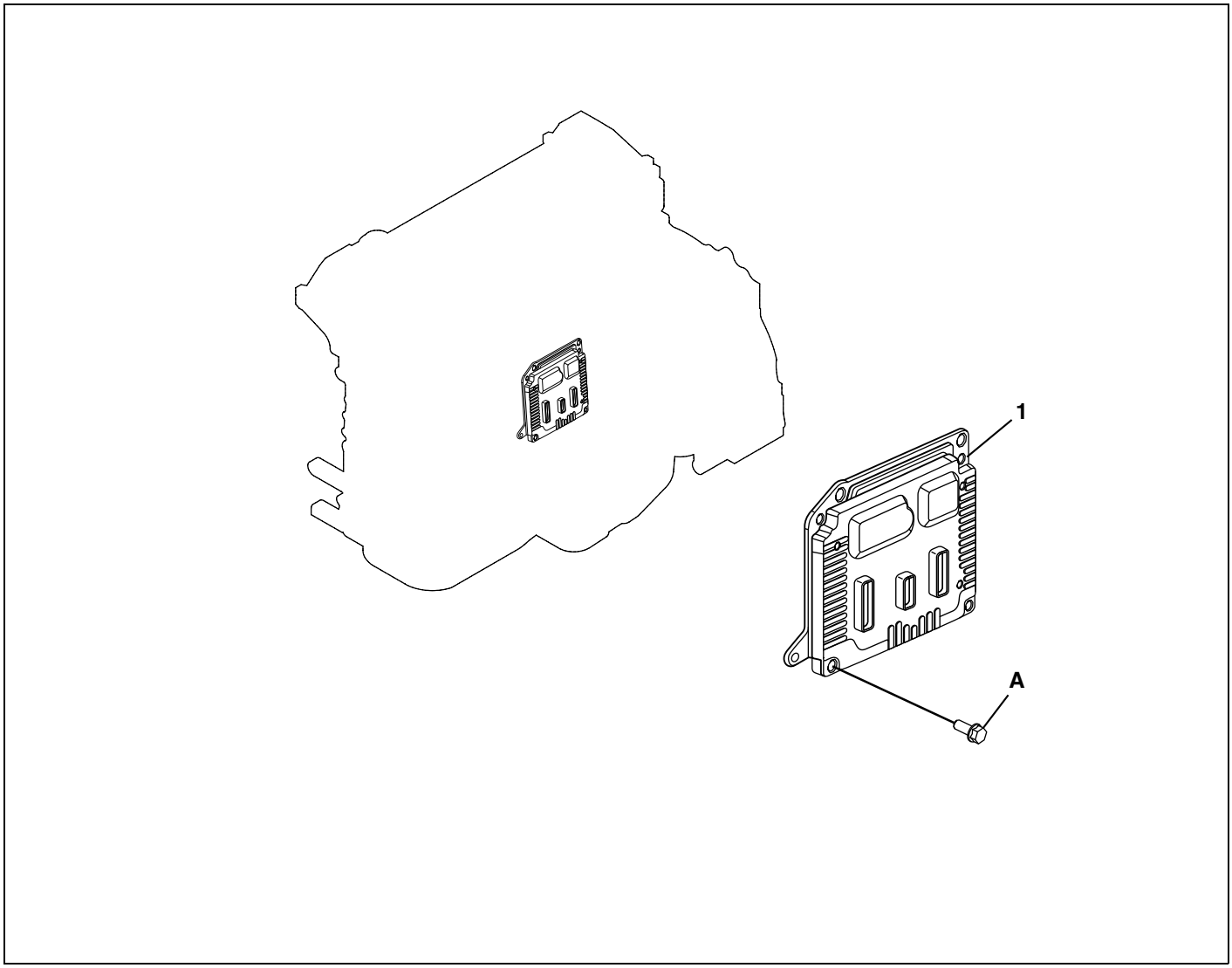


SAPH011061600002

| | |
|---|---|
| 1 Engine ECU | |

**Tightening torque** **Unit: N·m {kgf·cm, lbf·ft}**

| | |
|---|---|
| A 28.5 {291, 21} | |

# REPLACEMENT

EN0110616H100001

## DISCONNECTING THE ENGINE ECU CONNECTOR

**⚠ WARNING**
**Perform replacement after cooling to prevent burns. (Wait for at least 30 minutes after setting the starter key to the "LOCK" position.)**

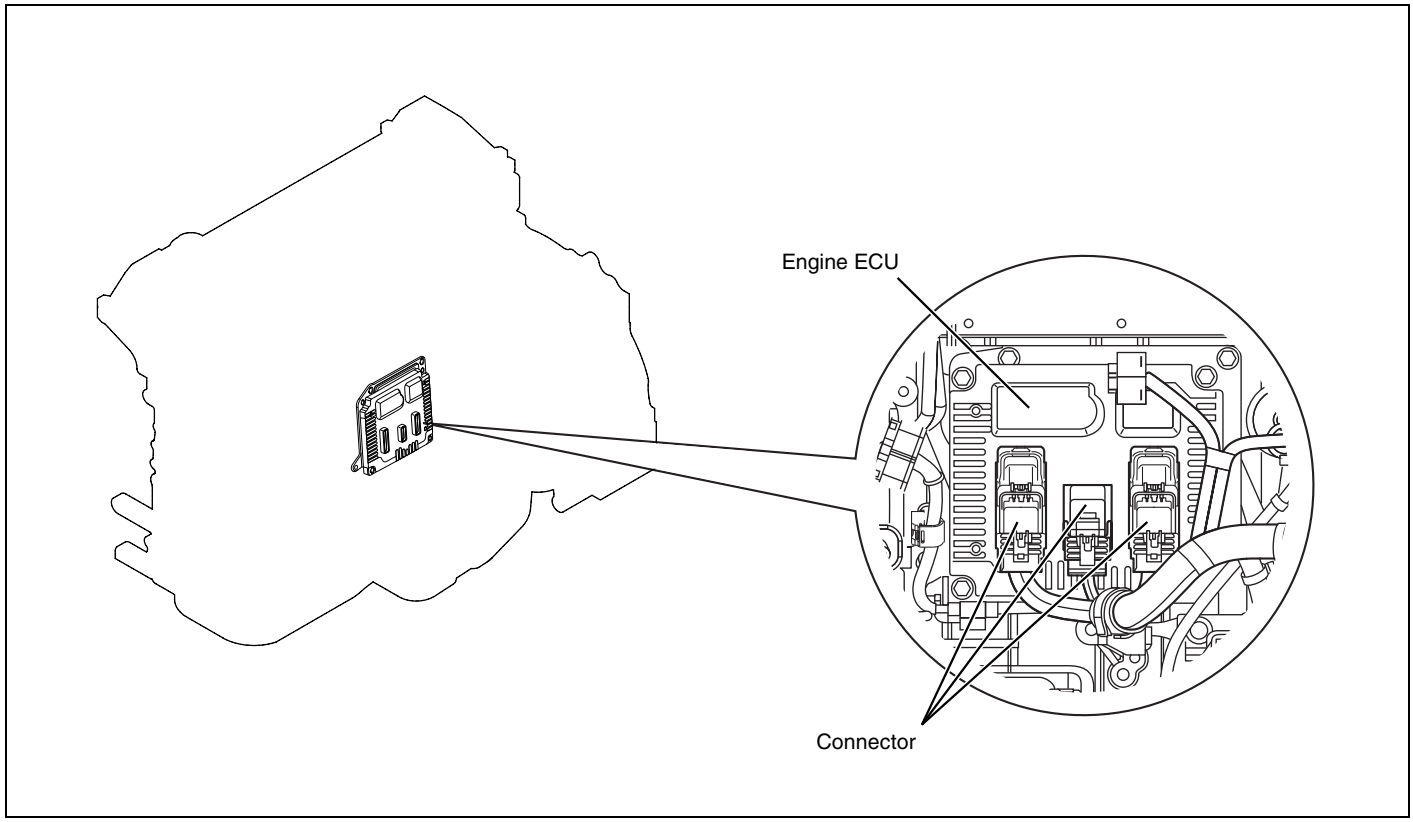


SAPH011061600003

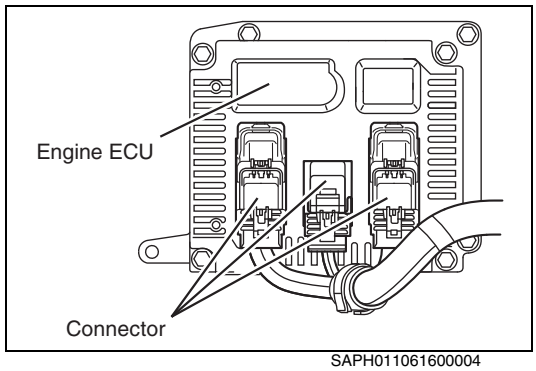


SAPH011061600004

**1. CLEANING AND DISCONNECTING THE ENGINE ECU CONNECTOR**

(1) Check that the engine ECU connector is completely connected to the engine ECU.
(2) Directly spray water around the engine ECU connector by using a spray bottle.

**NOTICE**
**While working, do not disconnect the connectors.**

**HINT**
**If it is much dirty, squirt water at the connector sliding portion and connector surface.**

(3) Blow air around the engine ECU connector and engine ECU surface to remove dirt and foreign matter.

**NOTICE**

- **While working, do not disconnect the connectors.**
- **Blow off water with air as much as possible for drying.**

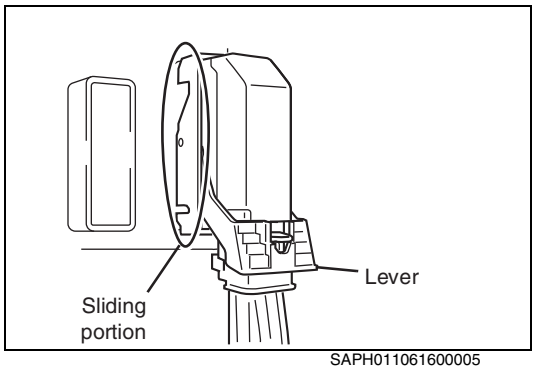

SAPH011061600005

(4) Using a small brush, carefully remove dirt and foreign matter remaining at the sliding portion.

**NOTICE**
**While working, do not disconnect the connectors.**

(5) Using a waste cloth, wipe off around the engine ECU connector and engine ECU surface.

**NOTICE**

- **While working, do not disconnect the connectors.**
- **Wipe up water thoroughly.**

(6) If you feel the movement of the lever unsmooth, repeat steps (1) through (5).

(7) Disconnect the engine ECU connector and check it for deposition of dirt and foreign matter.

a. Set the hook of the connector in the direction of the arrow to release the lock.

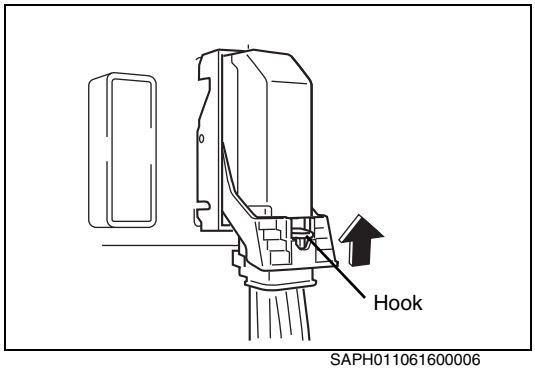

SAPH011061600006

b. While pushing the primary latch of the connector, move the lever in the direction of the arrow as shown in the figure until a "click" is heard and then disconnect the connector.

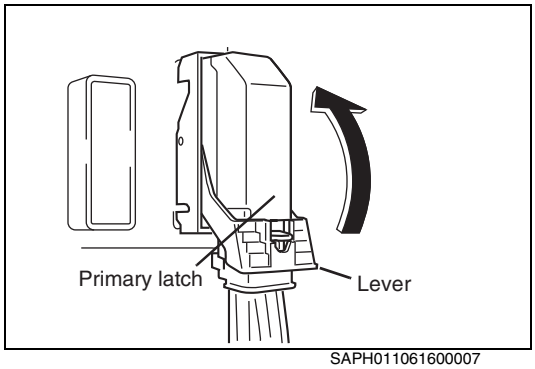

SAPH011061600007

c. Pull out the connector straight.

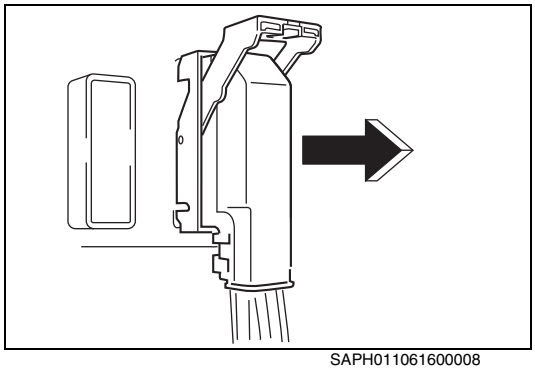
SAPH011061600008

**NOTICE**

- **Do not insert and remove the connector more than necessary.**
- **Do not give shocks to the engine ECU.**
- **Never disconnect the harness by holding and pulling or prying as it may result in wire or terminal deformation.**
- **Never insert a test lead from the rear of the connector.**
- **Do not paint or apply grease or oil to the ECU surface and connector to maintain their functions and durability.**

**HINT**
**If it cannot be pulled out with a light force, check if the lever is fully open.**

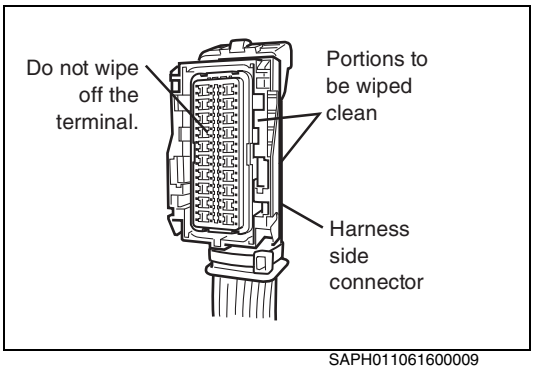


SAPH011061600009

(8) If the side of the harness side connector is found dirty, wipe it off with a moistened waste cloth while being careful not allowing dirt and foreign matter to drop.

**NOTICE**

- **Use a thoroughly wrung waste cloth.**
- **Do not wipe off the terminal opening.**
- **Do not directly spray water.**

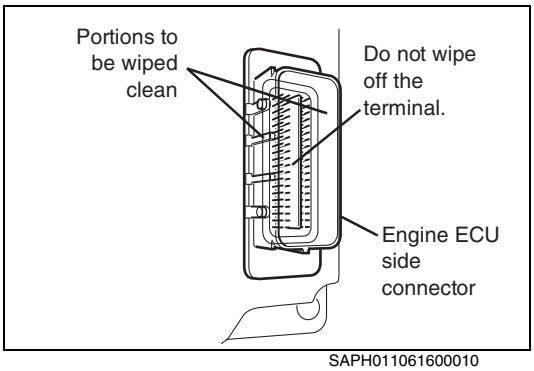


SAPH011061600010

(9) If the engine ECU side connector is found dirty, wipe off its side with a moistened waste cloth.

**NOTICE**

- **Use a thoroughly wrung waste cloth.**
- **Do not wipe off the terminal opening.**
- **Do not directly spray water.**

(10) Blow air on the terminal part inside the engine ECU side connector to remove dirt and foreign matter.

## REMOVING THE ENGINE ECU

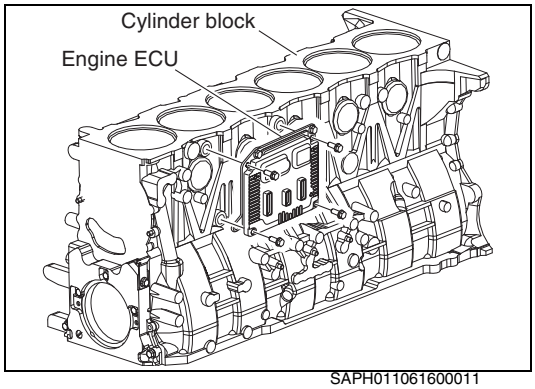

SAPH011061600011

### 1. REMOVING THE ENGINE ECU

(1) Unfasten the bolts (4 pcs.) and remove the engine ECU from the cylinder block.

**NOTICE**

- **Protect with plastic covers to avoid entry of dirt and foreign matter into the connectors of the engine ECU.**
- **Do not give shocks to the ECU.**
- **Do not use the engine ECU if dropped.**
- **Do not directly touch the connector terminals by hand.**
- **The engine ECU is non-disassemblable.**
- **Do not paint or apply grease or oil to the ECU surface and connector to maintain their functions and durability.**

## MOUNTING THE ENGINE ECU

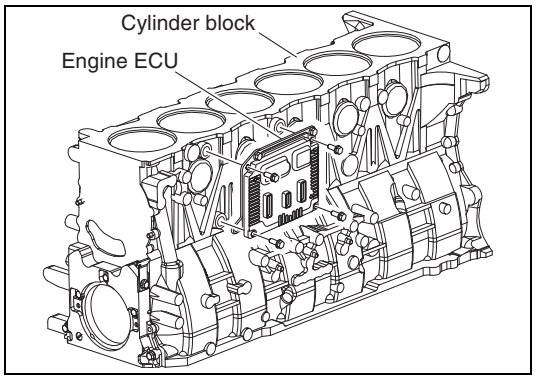

SAPH011061600012

### 1. MOUNTING THE ENGINE ECU

(1) Mount the engine ECU the cylinder block with the bolts (4 pcs.). For the tightening order, tighten them diagonally.
**Tightening Torque:**
**28.5 N·m {291 kgf·cm, 21 lbf·ft}**

**NOTICE**

- **Check that there are no dirt and foreign matter in the engine ECU connectors.**
- **Do not give shocks to the ECU.**
- **Do not use the engine ECU if dropped.**
- **Do not directly touch the connector terminals by hand.**
- **The engine ECU is non-disassemblable.**
- **Do not paint or apply grease or oil to the ECU surface and connector to maintain their functions and durability.**
- **Check that there is no dirt on the bosses (4 places) on the back of the engine ECU.**
- **Check that there are no grease and damage on the filter (resin housing) on the back of the engine ECU.**

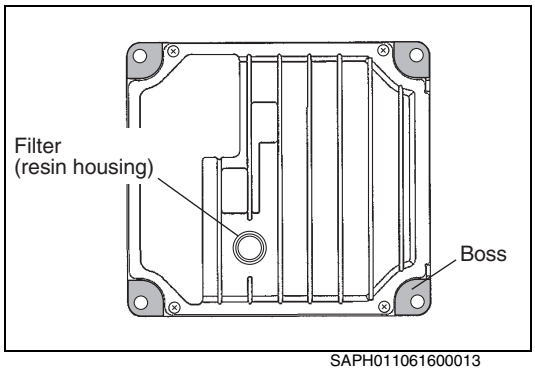

SAPH011061600013

## CONNECTING THE ENGINE ECU CONNECTOR

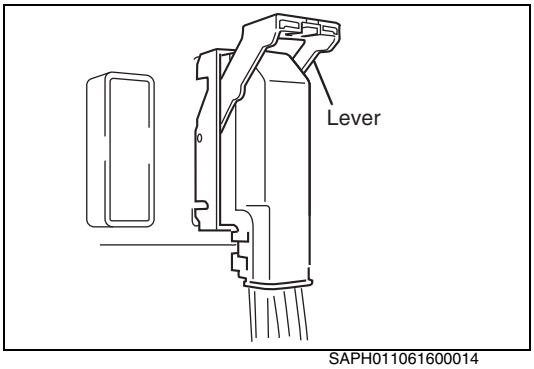

SAPH011061600014

### 1. CONNECTING THE ENGINE ECU CONNECTOR

(1) Check that the harness side connector lever is fully open and place it straight on the engine ECU side connector.

**NOTICE**
**At this time, check that the lever is fully open.**

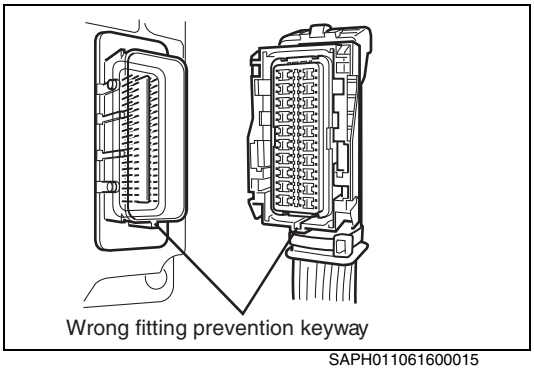

SAPH011061600015

**HINT**
**Check that it is inserted along the wrong fitting prevention keyway.**

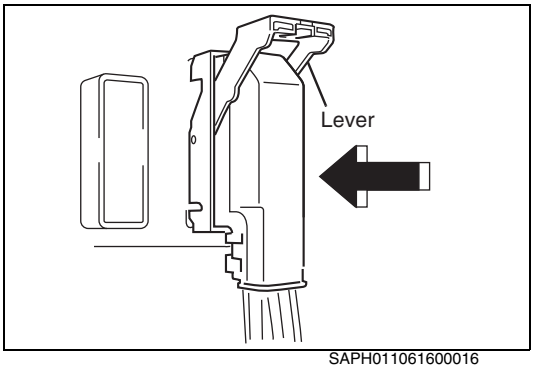

SAPH011061600016

(2) Press the upper part of the harness side connector and insert the connector uniformly.

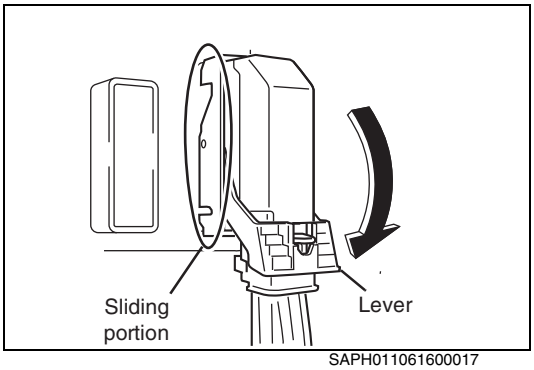

SAPH011061600017

(3) Move the lever in the direction of the arrow as shown in the figure until a "click" is heard and connect the connector.

**NOTICE**
**If the lever cannot move smoothly, repeat steps (1) and (2). Also drop a few drops of water to the sliding portion to make it smooth.**

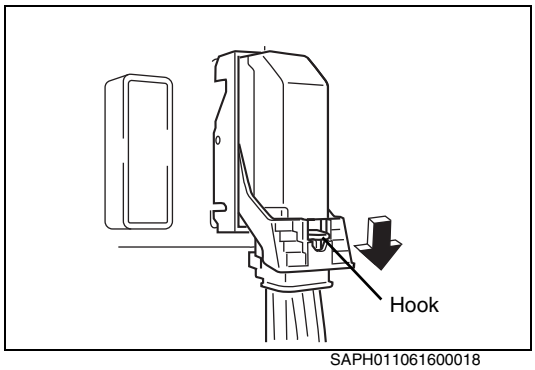

SAPH011061600018

(4) Move the hook in the direction of the arrow as shown in the figure until a "click" is heard in order to lock the connector.

**Hino Motors Sales U.S.A., Inc.**
**41180 Bridge Street, Novi, MI 48375**
**Telephone: (248) 699-9300**
**PRINTED IN JAPAN**

---

**Pub.No. S5-UJ08E14A '16.10**

MENU

# FOREWORD

This workshop manual has been prepared to provide information regarding repair procedures on Hino Trucks.

Applicable for HINO 238, 258LP, 268, 338, 358 series, equipped with J08E-VB and J08E-WU engine

When making any repairs on your vehicle, be careful not to be injured through improper procedures.
As for maintenance items, refer to the Driver's / Owner's Manual.
All information and specifications in this manual are based upon the latest product information available at the time of printing.
Hino Motors Sales U.S.A., Inc. reserves the right to make changes at any time without prior notice.

Please note that the publications below have also been prepared as relevant workshop manuals for the components and systems in these vehicles.

| Manual Name | Pub. No. |
|---|---|
| Chassis Workshop Manual | S1-UNAE14A 1/2<br>S1-UNAE14A 2/2 |
| J08E-VB, WU Engine Workshop Manual | S5-UJ08E14A |
| Trouble Shooting Workshop Manual | S7-UNAE14A 1/3<br>S7-UNAE14A 3/3 |

**Hino Motors Sales U.S.A. , Inc.**

# CHAPTER REFERENCES REGARDING THIS WORKSHOP MANUAL

Use this chart to the appropriate chapter numbers for servicing your particular vehicle.

| CHAPTER | | | |
|---|---|---|---|
| | MANUAL No. | S7-UNAE14A 2/3 (U.S.A.), S7-CNAE14A 2/3 (CANADA) | |
| | MODELS | HINO 238, 258LP, 268, 338, 358 | |
| | Production Code | NE8J, NF8J, NJ8J, NV8J, NH8J | |
| GENERAL INTRODUCTION | | 1-001 | |
| TROUBLE SHOOTING - COMPONENTS | | 2-001 | |
| TROUBLE SHOOTING - ELECTRICAL CONTROL SYSTEM | | 3-001 | |
| ENGINE CONTROL SYSTEM (J08E) | | 4-001 | |
| DEF SCR SYSTEM (DCU) | | 5-001 | |
| BRAKE CONTROL SYSTEM | | 9-001 (ABS:HYDRAULIC (E VERSION)) | 9-002 (ABS:FULL AIR) |
| VEHICLE CONTROL SYSTEM (VCS) | | 11-001 | |
| CAN COMMUNICATION | | 12-001 | |

This manual does not contain items on half-tone dot meshing.

HINO

# WORKSHOP MANUAL

INDEX: TROUBLE SHOOTING


GENERAL INTRODUCTION

TROUBLE SHOOTING - COMPONENTS

TROUBLE SHOOTING - ELECTRICAL CONTROL SYSTEM

ENGINE CONTROL SYSTEM (J08E)

DEF SCR SYSTEM (DCU)

BRAKE CONTROL SYSTEM

VEHICLE CONTROL SYSTEM (VCS)

CAN COMMUNICATION

# ENGINE CONTROL SYSTEM (J08E)

4-001

**ENGINE CONTROL SYSTEM....4-4**
PRECAUTIONS FOR DIAGNOSIS....4-4
SYSTEM BLOCK DIAGRAM....4-6
SYSTEM DIAGRAM....4-7
PRECAUTIONS....4-9
SENSOR LOCATION....4-13
COMPUTER (ECU) PIN ASSIGNMENT....4-22
ENGINE ECU CONNECTOR....4-28
INSPECTION....4-32
DIAGNOSIS USING THE PC DIAGNOSIS TOOL....4-33
DIAGNOSTIC TROUBLE CODE (DTC) TABLE....4-34
GROUP SHARING THE SENSOR POWER SUPPLY TERMINAL....4-55
GROUP SHARING THE SENSOR GND TERMINAL....4-56
ENGINE BASIC INSPECTION SHEET (ENGINE INSPECTION CHECK SHEET)....4-57
NO DTC....4-61
SIMULTANEOUS MALFUNCTION OF MULTIPLE ELECTRIC SYSTEMS....4-64
DTC: P0005....4-68
DTC: P0006 and P0007....4-72
DTC: P0016....4-77
DTC: P0027....4-80
DTC: P003A....4-85
DTC: P0045....4-90
DTC: P0047....4-95
DTC: P0048....4-100
DTC: P006E....4-105
DTC: P006F....4-109
DTC: P007B....4-113
DTC: P007C and P007D....4-126
DTC: P0088....4-134
DTC: P0096....4-143
DTC: P0097 and P0098....4-154
DTC: P00AF....4-162
DTC: P0101....4-166
DTC: P0104....4-173
DTC: P0106....4-179
DTC: P0107....4-185
DTC: P0108....4-192
DTC: P0111....4-198
DTC: P0112 and P0113....4-204
DTC: P0115....4-210
DTC: P0117 and P0118....4-218
DTC: P011A....4-226
DTC: P0122 and P0123....4-234
DTC: P0126....4-244
DTC: P0128....4-248
DTC: P0148....4-253
DTC: P016E and P016F....4-264
DTC: P0182 and P0183....4-274
DTC: P0191....4-281
DTC: P0192 and P0193....4-286
DTC: P01A5....4-295
DTC: P01A6....4-302
DTC: P0200....4-309
DTC: P0201, P0202, P0203, P0204, P0205 and P0206....4-311
DTC: P0217....4-316
DTC: P0219....4-321
DTC: P0222 and P0223....4-327
DTC: P0234....4-337
DTC: P0263, P0266, P0269, P0272, P0275 and P0278....4-343
DTC: P026C and P026D....4-354
DTC: P0299....4-367
DTC: P0300 (J08E-VB)....4-372
DTC: P0300 (J08E-WU)....4-380
DTC: P0301, P0302, P0303, P0304, P0305 and P0306....4-389
DTC: P0335....4-397
DTC: P0336....4-402
DTC: P0340....4-408
DTC: P0341....4-413
DTC: P0381....4-420
DTC: P0401....4-425
DTC: P0402....4-439
DTC: P0404....4-449
DTC: P0405 and P0406....4-454
DTC: P041B....4-460
DTC: P041C and P041D....4-468
DTC: P0420....4-476
DTC: P0421....4-478
DTC: P0422....4-490
DTC: P0489 and P0490....4-493
DTC: P049D....4-499
DTC: P04D5 and P04D6....4-504
DTC: P04DA....4-512
DTC: P04DB....4-522

DTC: P0500 and P0501 ....4-530
DTC: P0504....4-536
DTC: P0506 and P0507 ....4-542
DTC: P0524....4-545
DTC: P0545 and P0546 ....4-550
DTC: P054E and P054F....4-559
DTC: P0562 and P0563 ....4-562
DTC: P0603....4-568
DTC: P0605....4-572
DTC: P0606....4-574
DTC: P0607....4-576
DTC: P0610....4-578
DTC: P0611....4-581
DTC: P0617....4-583
DTC: P0628 and P0629 ....4-587
DTC: P062F ....4-594
DTC: P0630....4-598
DTC: P0642....4-601
DTC: P0643....4-605
DTC: P064C ....4-610
DTC: P0652....4-615
DTC: P0653....4-620
DTC: P0671, P0672, P0675 and P0676 ....4-625
DTC: P0683....4-635
DTC: P0686....4-640
DTC: P0698....4-644
DTC: P0699....4-646
DTC: P06A4 ....4-648
DTC: P06A5 ....4-650
DTC: P06D3 and P06D4 ....4-652
DTC: P0704....4-659
DTC: P073D ....4-663
DTC: P081A ....4-669
DTC: P081B ....4-673
DTC: P0850....4-677
DTC: P1133....4-682
DTC: P119F ....4-688
DTC: P1426....4-693
DTC: P1427....4-699
DTC: P1428....4-705
DTC: P1458....4-711
DTC: P1459....4-716
DTC: P14B0 ....4-721
DTC: P14B2 ....4-725
DTC: P14B3 and P14B4 ....4-729
DTC: P14B7 and P14B8 ....4-735
DTC: P14BC and P14BD ....4-741
DTC: P14BF ....4-747
DTC: P1515....4-752
DTC: P1530....4-757
DTC: P2002....4-761
DTC: P200C ....4-781
DTC: P2032 and P2033 ....4-787
DTC: P203F ....4-795
DTC: P204F ....4-799
DTC: P206B ....4-801
DTC: P207F ....4-824
DTC: P2080....4-847
DTC: P2084....4-856
DTC: P20CD ....4-864
DTC: P20CE....4-868
DTC: P20CF....4-872
DTC: P20D8 ....4-877
DTC: P20DE....4-882
DTC: P20DF....4-886
DTC: P20E0 ....4-892
DTC: P20EE....4-898
DTC: P2100....4-923
DTC: P2101....4-929
DTC: P2103....4-935
DTC: P2120....4-941
DTC: P2122 and P2123 ....4-945
DTC: P2127 and P2128 ....4-953
DTC: P2135....4-962
DTC: P2138....4-967
DTC: P2146....4-972
DTC: P2147 and P2148 ....4-979
DTC: P2149....4-987
DTC: P2150 and P2151 ....4-993
DTC: P2184 and P2185 ....4-1001
DTC: P2201....4-1009
DTC: P2227....4-1048
DTC: P2228 and P2229 ....4-1052
DTC: P2269....4-1057
DTC: P226C ....4-1061
DTC: P229F ....4-1069
DTC: P22D3 ....4-1109
DTC: P240F ....4-1113
DTC: P2428....4-1122
DTC: P242B ....4-1126
DTC: P242C and P242D ....4-1134
DTC: P244A ....4-1142
DTC: P244B ....4-1159
DTC: P2457....4-1179
DTC: P2458....4-1193
DTC: P2459....4-1202
DTC: P2463....4-1204
DTC: P246F ....4-1209
DTC: P2470 and P2471 ....4-1217
DTC: P2481 and P2482 ....4-1225
DTC: P2483....4-1233
DTC: P24A0 ....4-1241
DTC: P24A1 ....4-1244
DTC: P24A2 ....4-1246
DTC: P24A3 ....4-1256
DTC: P24AE....4-1261
DTC: P24AF....4-1269
DTC: P24B0 ....4-1274

DTC: P24B1 ..... 4-1279
DTC: P24B4 ..... 4-1282
DTC: P24B6 ..... 4-1292
DTC: P24B7 ..... 4-1297
DTC: P24C7 ..... 4-1300
DTC: P24D1 ..... 4-1304
DTC: P24DA ..... 4-1309
DTC: P2563 ..... 4-1314
DTC: P2564 and P2565 ..... 4-1319
DTC: P259E ..... 4-1326
DTC: P259F ..... 4-1331
DTC: P2635 ..... 4-1336
DTC: P268A and P2696 ..... 4-1345
DTC: P2A00 ..... 4-1351
DTC: P2A01 ..... 4-1360
DTC: P2BA9 ..... 4-1369
DTC: U0073 ..... 4-1374
DTC: U010A ..... 4-1377
DTC: U010C ..... 4-1380
DTC: U010E ..... 4-1383
DTC: U029D ..... 4-1386
DTC: U029E ..... 4-1389
DTC: U02A2 ..... 4-1392
DTC: U02A3 ..... 4-1395
DTC: U0301 ..... 4-1398
DTC: U1001 ..... 4-1401
DTC: U110A ..... 4-1404

# DTC: P1133

EN01H16F01030F03001118

## P1133: PTO accelerator sensor (Hi)

INFORMATION

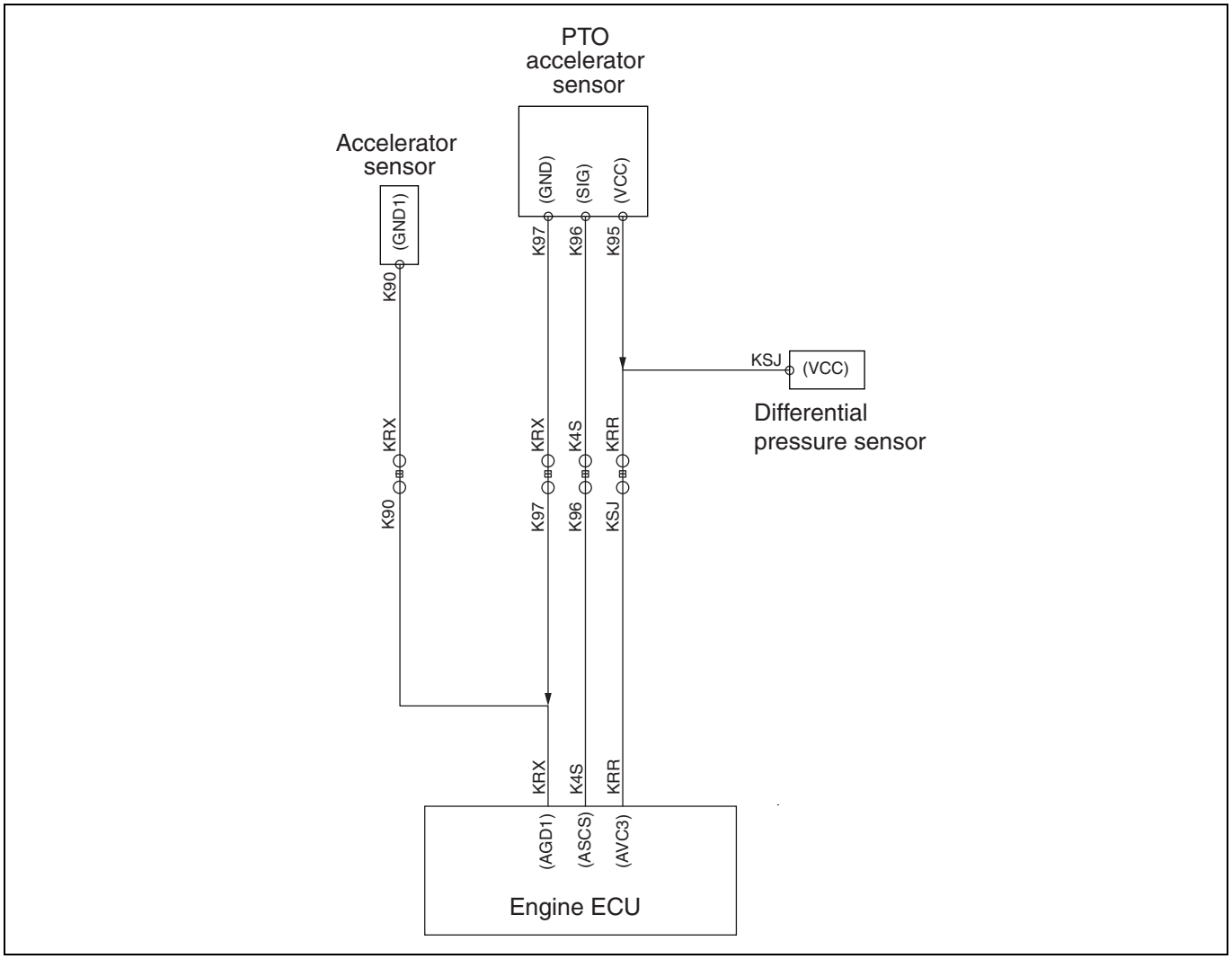


SAPH16F010300652

**1. Technical description**

- The operational accelerator sensor measures accelerator opening if PTO (power take off) is used. (This applies only to PTO-equipped vehicles.)

**<Description of malfunction>**

- The operational accelerator sensor cannot correctly sense.
- +B short-circuit is likely to have occurred.

**2. DTC set condition**

(1) Check conditions

- Starter switch ON.
- Battery voltage is in the range of 10 V to 16 V.

The conditions described above remain for 5 seconds or longer.

(2) Judgment criteria

- Sensor voltage remains at 4.82 V or higher for 3 seconds or longer.

**3. Reset condition**

- After normal operation is restored and the starter switch is turned LOCK.

**4. Indication, warning or system control regulation when the DTC is set.**

- MIL: OFF
- SVS light: OFF
- Body mounting control is not available.

**5. Symptoms on the vehicle when the DTC is set**

**<Symptoms on the vehicle due to backup control (fail safe function)>**

- Body mounting control is not working.

**<Symptoms on the vehicle due to malfunction>**

- –

**6. Pre-inspection work**

- Check that the battery voltage is in the normal range.

**7. After-inspection work**

- Clear all past DTCs.
- Check that no DTC is stored after test drive.

**8. Estimated failure factors**

- Faulty harness (+B short-circuit)
- Malfunction of sensor
- Failure in engine ECU sensor power supply or internal circuit

## INSPECTION PROCEDURE: P1133

| 1 | Inspect the PTO accelerator sensor connector |
|---|---|

1. Check the connection of the PTO accelerator sensor connector (Looseness and poor contact).

**Was any failure found?**

**YES**

**Connect securely, repair if needed.**
**Perform "After-inspection work" of INFORMATION section.**

**NO**

**Go to step 2.**

| 2 | Inspect the PTO accelerator sensor |
|---|---|

1. Check the installation of the PTO accelerator sensor.
2. Make sure there is no dirt or damage to the PTO accelerator sensor.

**Was any failure found?**

**YES**

**Clean the PTO accelerator sensor and install it properly.**
**If damaged, replace the sensor.**
**Perform "After-inspection work" of INFORMATION section.**

**NO**

**Go to step 3.**

| 3 | Inspect the PTO accelerator sensor unit |
|---|---|

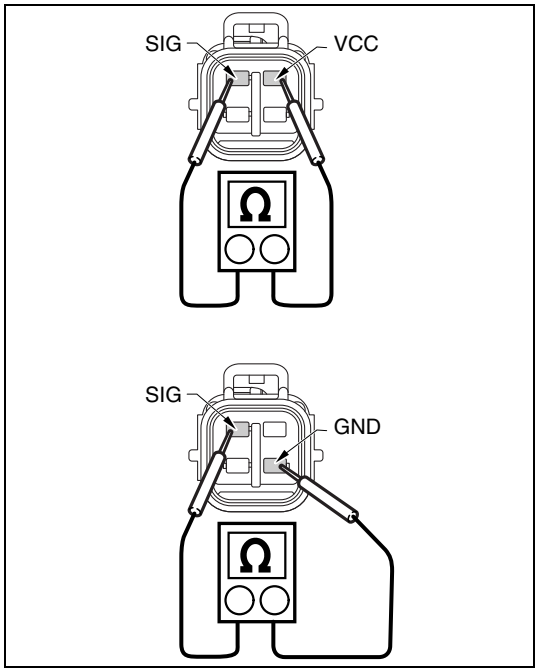


SAPH16F010300653

1. Set the starter switch to the "LOCK" position.
2. Disconnect the PTO accelerator sensor connector.
3. Use the electrical tester to measure the resistance between the terminals of the PTO accelerator sensor.

| Measurement conditions | Tester connections | Standard values |
|---|---|---|
| **Starter switch: LOCK** | **PTO accelerator sensor SIG – VCC SIG – GND** | **More than 2 Ω** |

**Do the measurements meet the standard value?**

**YES**

**Go to step 4.**

**NO**

**Replace the PTO accelerator sensor. Perform "After-inspection work" of INFORMATION section.**

| 4 | Inspect for short-circuit of the PTO accelerator sensor harness |
|---|---|

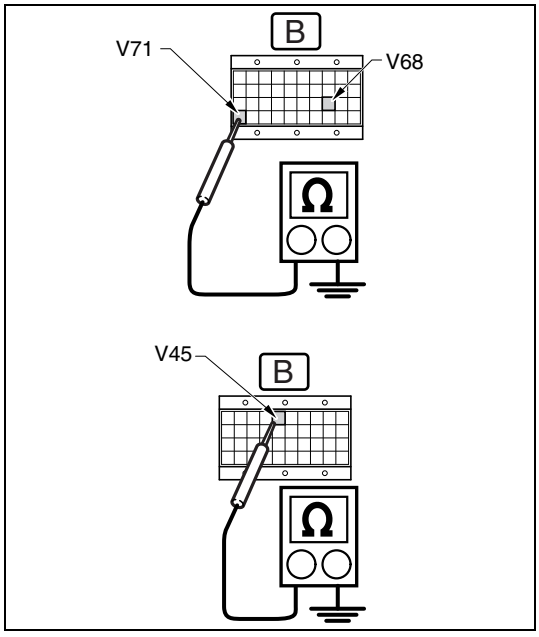


SAPH16F010300654

1. Connect the signal check harness to the engine ECU. (Do not connect the harness to the ECU.)
2. Use the electrical tester to measure the resistance between the terminals of the engine ECU (signal check harness) and ground.

| Measurement conditions | Tester connections | Standard values |
|---|---|---|
| **Starter switch: LOCK** | **Engine ECU (signal check harness) ASCS(V68) – Ground AVC3(V71) – Ground AGD1(V45) – Ground** | ∞ Ω |

**Do the measurements meet the standard value?**

**YES**

**Go to step 5.**

**NO**

**Repair or replace the harness.**
**Perform "After-inspection work" of INFORMATION section.**

| 5 | Inspect disconnection of the PTO accelerator sensor harness |
|---|---|

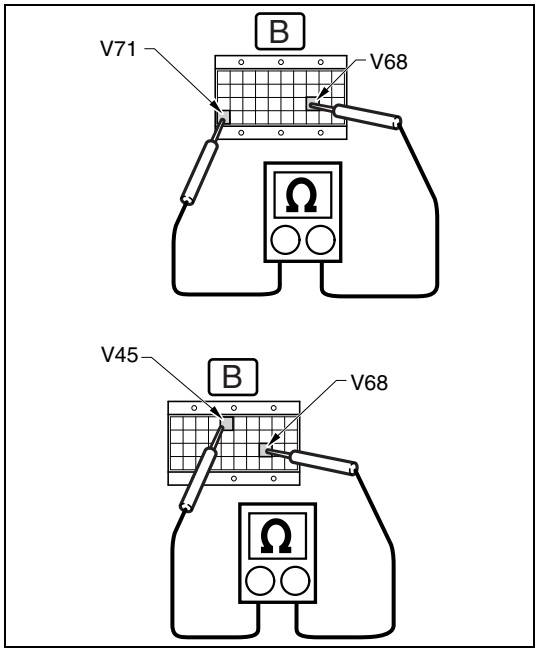


SAPH16F010300655

1. Connect the PTO accelerator sensor connector.
2. Use the electrical tester to measure the resistance between the terminals of the engine ECU (signal check harness).

| Measurement conditions | Tester connections | Standard values |
|---|---|---|
| Starter switch: LOCK | Engine ECU (signal check harness) ASCS(V68) – AVC3(V71) ASCS(V68) – AGD1(V45) | More than 2 Ω |

**Do the measurements meet the standard value?**

**YES**

**Go to step 6.**

**NO**

**Repair or replace the harness.**
**Perform "After-inspection work" of INFORMATION section.**

| 6 | Check the DTC detected (Engine ECU) [HINO DX II ] |
|---|---|

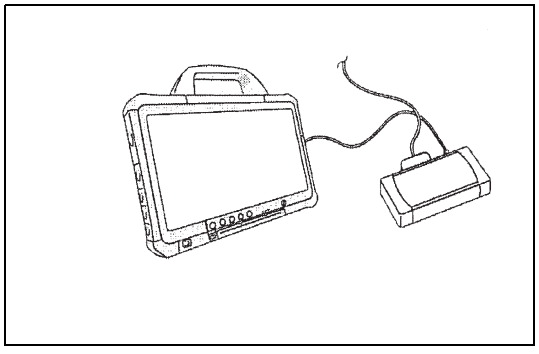

SAPH16F010300656

1. Connect the vehicle to HINO DX II .
2. Set the starter switch to the "ON" position.
3. Select [Engine] and check if P1133 has been detected.

**Has DTC P1133 been detected?**

**YES**

**Replace the engine ECU.**
**Perform "After-inspection work" of INFORMATION section.**

**NO**

**Procedure completed.**
**Perform "After-inspection work" of INFORMATION section.**

# DTC: P119F

EN01H16F01030F03001119

## P119F: Common rail pressure sensor - rationality

INFORMATION

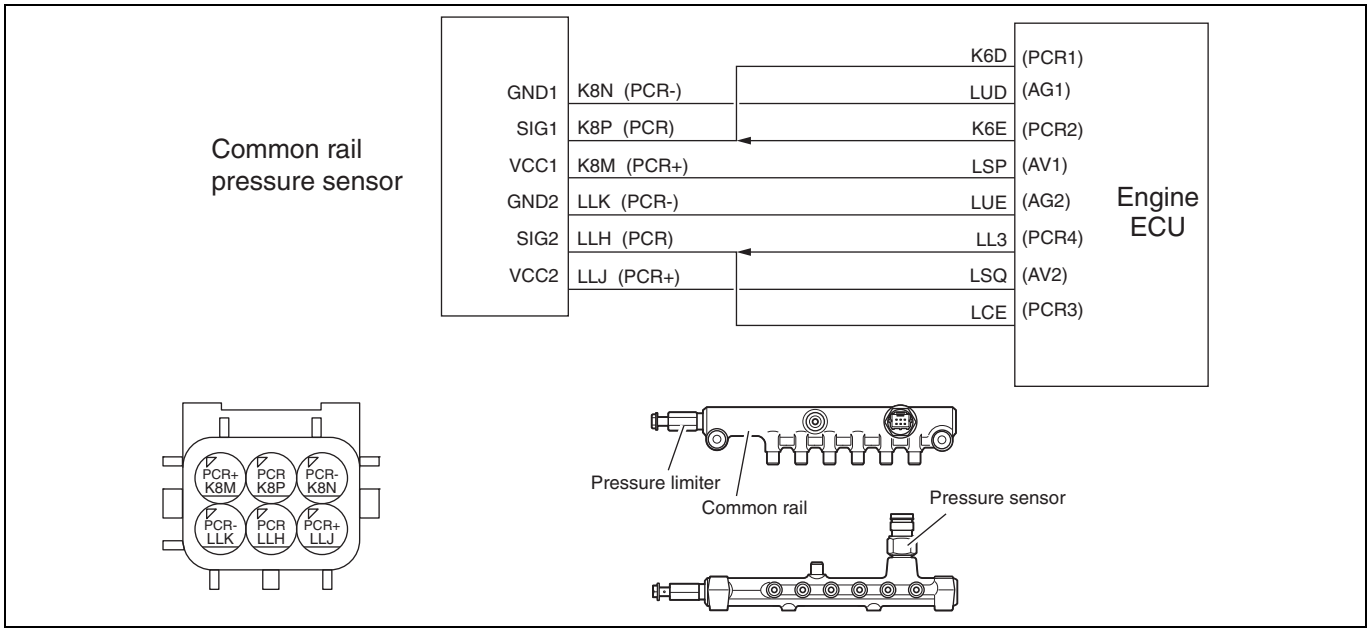


SAPH16F010300657

**1. Technical description**

- The common rail pressure sensor consistently measures common rail pressure.

**<Description of malfunction>**

- Common rail pressure cannot be correctly sensed.
- Malfunction is likely to have occurred in the common rail pressure sensor.

**2. DTC set condition**

(1) Check conditions

- Starter switch ON.
- Battery voltage is in the range of 10 V to 16 V.

The conditions described above remain for 5 seconds or longer.

- Common rail pressure is 220 MPa or less.
- No other diagnosis codes are present (the monitor disable DTC table can be referred to)

(2) Judgment criteria

P119F is detected under the conditions described below. 1 and 2 represent the order of priority.

1. A difference in voltage remains higher than 1.06 V for 3 seconds or longer.
2. A difference in voltage remains less than 0.04 V for 3 seconds or longer.

**3. Reset condition**

- After normal operation is restored and the starter switch is on the "LOCK" position.

**4. Indication, warning or system control regulation when the DTC is set.**

- MIL: ON
- SVS light: OFF

**5. Symptoms on the vehicle when the DTC is set**

**<Symptoms on the vehicle due to backup control (fail safe function)>**

- –

**<Symptoms on the vehicle due to malfunction>**

- –

**6. Pre-inspection work**

- Check that the battery voltage is in the normal range.

**7. After-inspection work**

- Clear all past DTCs.
- Check that no DTC is stored after test drive.

**8. Estimated failure factors**

- Sensor disconnected from measuring site
- Harness disconnection or short-circuit
- Abnormal resistance of sensor
- Malfunction of ECU

## INSPECTION PROCEDURE: P119F

| 1 | Check the DTC detected 1 (Engine ECU) [HINO DX II ] |
|---|---|

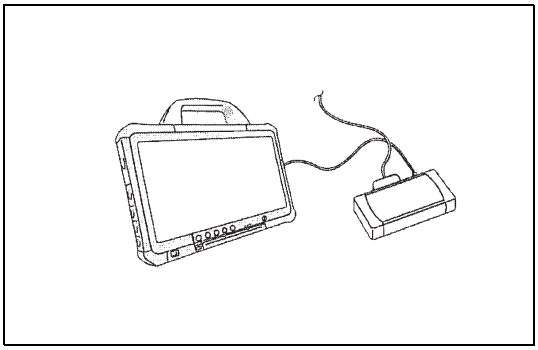

SAPH16F010300658

1. Set the starter switch to the "LOCK" position.
2. Connect the vehicle to HINO DX II .
3. Set the starter switch to the "ON" position.
4. Select [Engine] and check if any DTC other than P119F (for example, P0192, P0193) have been detected.

**Has a DTC other than P119F been detected?**

**YES**

**Go to the diagnostic procedure of a related DTC.**

**NO**

**Go to step 2.**

| 2 | Inspect the common rail pressure sensor connector |
|---|---|

1. Check the connection of the common rail pressure sensor connector (Looseness and poor contact).

**Was any failure found?**

**YES**

**Connect securely, repair if needed.**
**Perform "After-inspection work" of INFORMATION section.**

**NO**

**Go to step 3.**

| 3 | Inspect the sensor power supply |
|---|---|

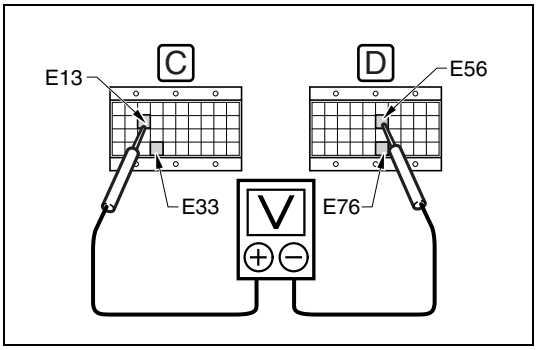


SAPH16F010300659

1. Set the starter switch to the "LOCK" position.
2. Connect the signal check harness to the engine ECU.
3. Disconnect the common rail pressure sensor connector.
4. Set the starter switch to the "ON" position.
5. Use the electrical tester to measure the voltage between the terminals of the engine ECU (signal check harness).

| Measurement conditions | Tester connections | Standard values |
|---|---|---|
| **Starter switch: ON** | **Engine ECU (signal check harness) AV1(E13) – AG1(E56) AV2(E33) – AG2(E76)** | **4.5 – 5.5 V** |

**Do the measurements meet the standard value?**

**YES**

**Go to step 4.**

**NO**

**Replace the engine ECU.**
**Perform "After-inspection work" of INFORMATION section.**

| 4 | Inspect the signal of the common rail pressure sensor |
|---|---|

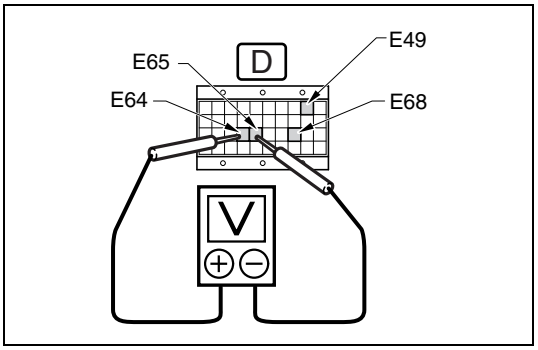


SAPH16F010300660

1. Set the starter switch to the "LOCK" position.
2. Connect the common rail pressure sensor connector.
3. Set the starter switch to the "ON" position.
4. Use the electrical tester to measure the voltage between the terminals of the engine ECU (signal check harness).

| Measurement conditions | Tester connections | Standard values |
|---|---|---|
| **Starter switch: ON** | **Engine ECU (signal check harness) PCR1(E49) – PCR3(E64) PCR1(E49) – PCR4(E65) PCR2(E68) – PCR3(E64) PCR2(E68) – PCR4(E65)** | **0.3 – 0.7 V** |

**Do the measurements meet the standard value?**

**YES**

**Go to step 5.**

**NO**

**Replace the common rail pressure sensor.**
**Perform "After-inspection work" of INFORMATION section.**

| 5 | **Check the DTC detected 2(Engine ECU) [HINO DX II ]** |
|---|---|

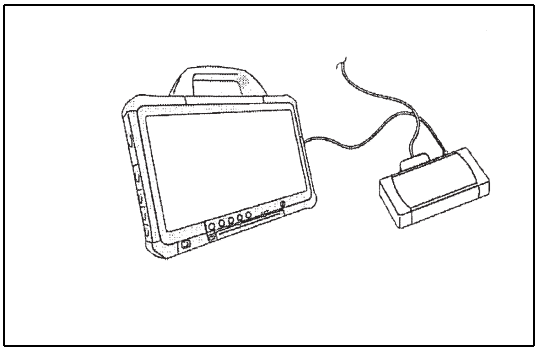

SAPH16F010300661

1. Perform engine warm-up. (engine coolant temperature: 60 °C {140 °F} or more)
2. Stop the engine and set the starter switch to the "ON" position.
3. Select [Engine] and check if P119F has been detected.

**Has DTC P119F been detected?**

**YES**

**Replace the engine ECU.**
**Perform "After-inspection work" of INFORMATION section.**

**NO**

**Procedure completed.**
**Perform "After-inspection work" of INFORMATION section.**

# DTC: P1426

EN01H16F01030F03001120

## P1426: Differential pressure sensor - rationality

INFORMATION

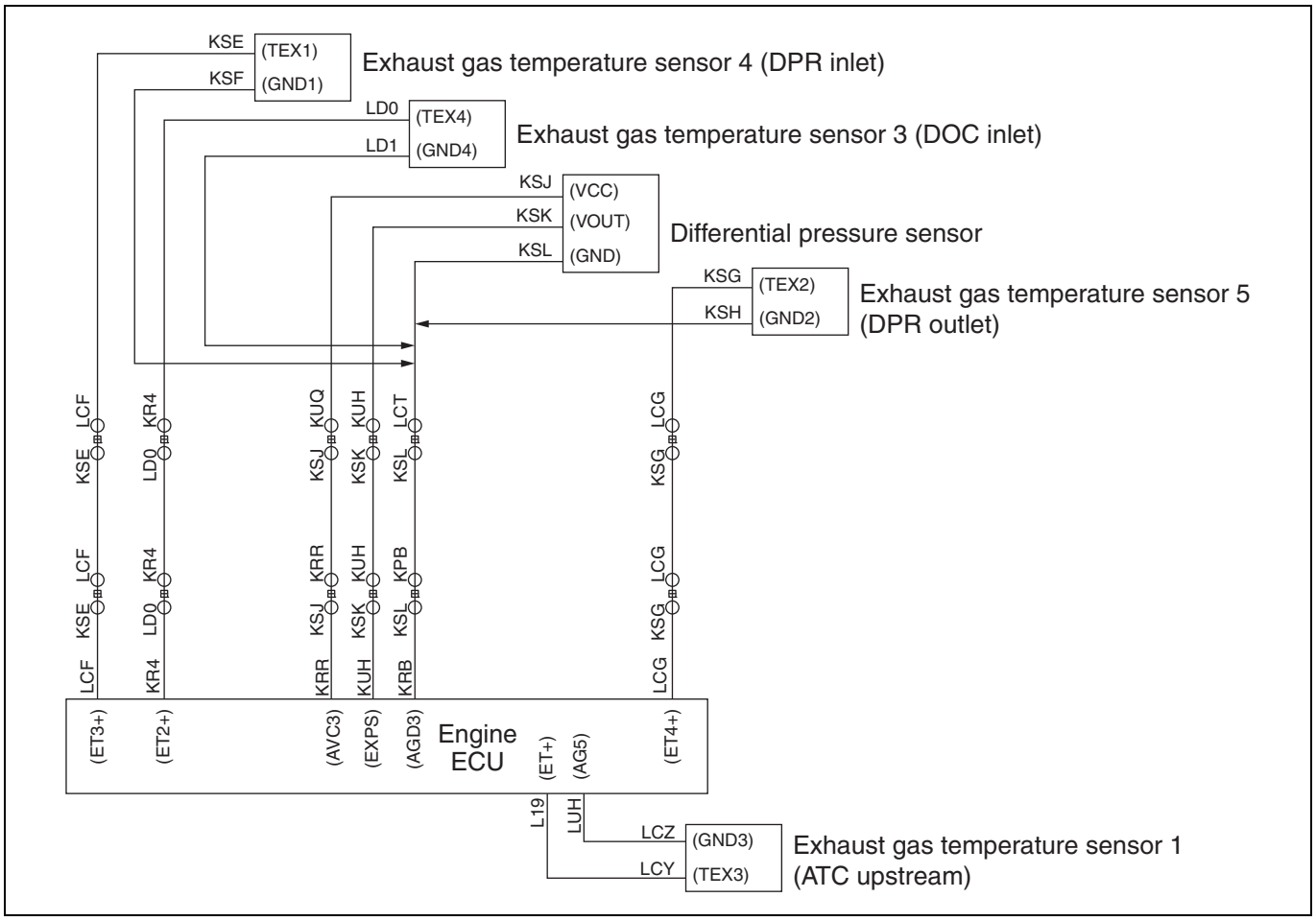


SAPH16F010300662

**1. Technical description**

- It detects a difference between pressure at the inlet of the muffler and atmospheric pressure and monitors any failure or malfunction of the DPR.

**<Description of malfunction>**

- DPR differential pressure sensor is recognized as being stuck or in characteristics failure condition.

**2. DTC set condition**

(1) Check conditions

- Elapse of at least 2 seconds after engine stop
- No other DTCs are present.

(2) Judgment criteria

- Differential pressure remains less than -2 kPa {-0.3 psi} or higher than +2 kPa {+0.3 psi} for 2 seconds.

**3. Reset condition**

- Immediately after normal operation is restored.

**4. Indication, warning or system control regulation when the DTC is set.**

- MIL: ON
- SVS light: OFF

**5. Symptoms on the vehicle when the DTC is set**

**<Symptoms on the vehicle due to backup control (fail safe function)>**

- –

**<Symptoms on the vehicle due to malfunction>**

- –

**6. Pre-inspection work**

- Check that the battery voltage is in the normal range.

**7. After-inspection work**

- Clear all past DTCs.
- Check that no DTC is stored after test drive.

**8. Estimated failure factors**

- Loose/disconnected sensor and failure in sensing area (contamination or clogging)
- Abnormality in resistance of sensor
- Malfunction of engine ECU sensor power supply or internal circuit

## INSPECTION PROCEDURE: P1426

| 1 | Check the differential pressure hose and pipe |
|---|---|

1. Check if the differential pressure hose and pipe are cracked, bent, ruptured, or clogged.

**Was any failure found?**

**YES**

**Clean or replace the differential pressure hose and pipe.**
**Perform "After-inspection work" of INFORMATION section.**

**NO**

**Go to step 2.**

| 2 | Inspect the differential pressure sensor connector |
|---|---|

1. Check the connection of the differential pressure sensor connector (Looseness and poor contact).

**Was any failure found?**

**YES**

**Connect securely, repair if needed.**
**Perform "After-inspection work" of INFORMATION section.**

**NO**

**Go to step 3.**

| 3 | Inspect the differential pressure sensor |
|---|---|

1. Check the installation of the differential pressure sensor.
2. Make sure there is no dirt or damage to the differential pressure sensor.

**Was any failure found?**

**YES**

**Clean the differential pressure sensor and install it properly.**
**If damaged, replace the differential pressure sensor.**
**Perform "After-inspection work" of INFORMATION section.**

**NO**

**Go to step 4.**

| 4 | Inspect the differential pressure sensor unit |
|---|---|

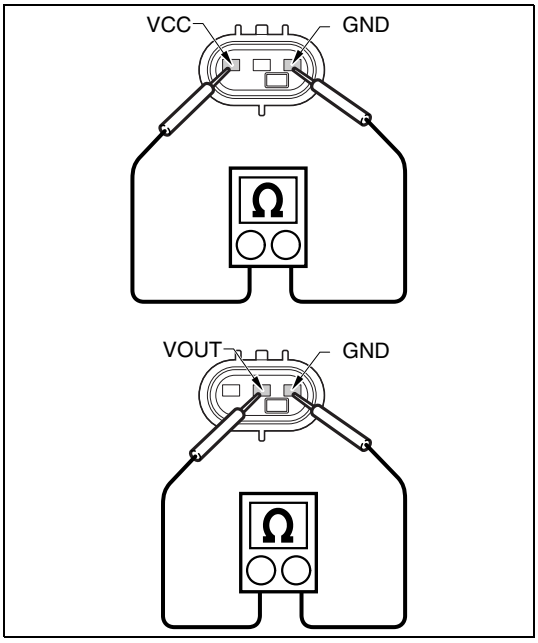


SAPH16F010300663

1. Set the starter switch to the "LOCK" position.
2. Disconnect the DPR differential pressure sensor connector.
3. Use the electrical tester to measure the resistance between the terminals of the differential pressure sensor.

| Measurement conditions | Tester connections | Standard values |
|---|---|---|
| **Starter switch: LOCK** | **Differential pressure sensor VCC – GND VOUT – GND** | **2 – 15 kΩ** |

**Do the measurements meet the standard value?**

**YES**

**Go to step 5.**

**NO**

**Replace the differential pressure sensor. Perform "After-inspection work" of INFORMATION section.**

| 5 | Inspect for short-circuit of the differential pressure sensor harness |
|---|---|

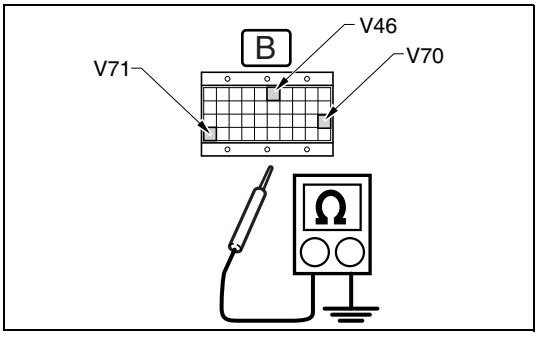


SAPH16F010300664

1. Set the starter switch to the "LOCK" position.
2. Connect the signal check harness to the engine ECU vehicle-side harness. (Do not connect the harness to the ECU.)
3. Use the electrical tester to measure the resistance between the terminals of the engine ECU (signal check harness) and ground.

| Measurement conditions | Tester connections | Standard values |
|---|---|---|
| **Starter switch: LOCK** | **Engine ECU (signal check harness) AVC3(V71) – Ground EXPS(V70) – Ground AGD3(V46) – Ground** | **∞ Ω** |

**Do the measurements meet the standard value?**

| YES | NO |
|---|---|
| **Go to step 6.** | **Repair or replace the harness. Perform "After-inspection work" of INFORMATION section.** |

## 6 Inspect disconnection of the differential pressure sensor harness

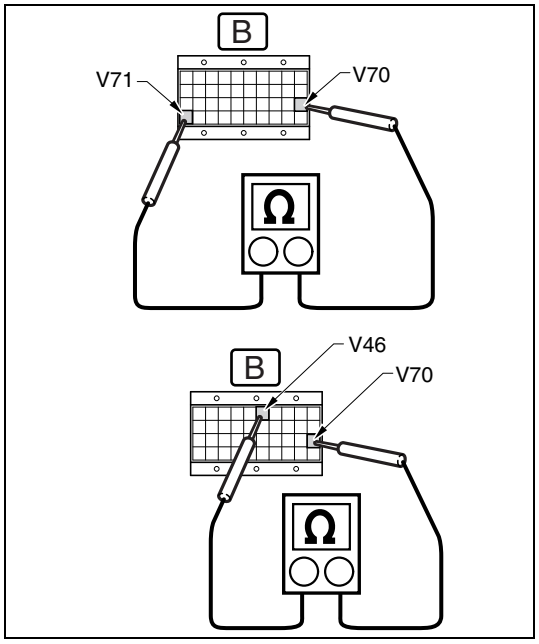


SAPH16F010300665

1. Connect the differential pressure sensor connector.
2. Use the electrical tester to measure the resistance between the terminals of the engine ECU (signal check harness).

| Measurement conditions | Tester connections | Standard values |
|---|---|---|
| Starter switch: LOCK | Engine ECU (signal check harness) AVC3(V71) – EXPS(V70) AGD3(V46) – EXPS(V70) | 2 – 15 kΩ |

**Do the measurements meet the standard value?**

| YES | NO |
|---|---|
| **Go to step 7.** | **Repair or replace the harness. Perform "After-inspection work" of INFORMATION section.** |

| 7 | Check the DTC detected (Engine ECU) [HINO DX II ] |
|---|---|

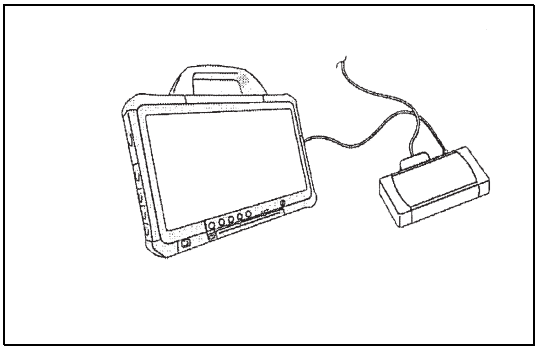

SAPH16F010300666

1. Perform engine warm-up. (engine coolant temperature: 60 °C {140 °F} or more)
2. Stop the engine and set the starter switch to the "LOCK" position.
3. Connect the vehicle to HINO DX II .
4. Set the starter switch to the "ON" position.
5. Select [Engine] and check if P1426 has been detected.

**Has DTC P1426 been detected?**

**YES**

**Replace the engine ECU.**
**Perform "After-inspection work" of INFORMATION section.**

**NO**

**Procedure completed.**
**Perform "After-inspection work" of INFORMATION section.**

# DTC: P1427

EN01H16F01030F03001121

## P1427: Differential pressure sensor - out of range (Out of range low)

INFORMATION

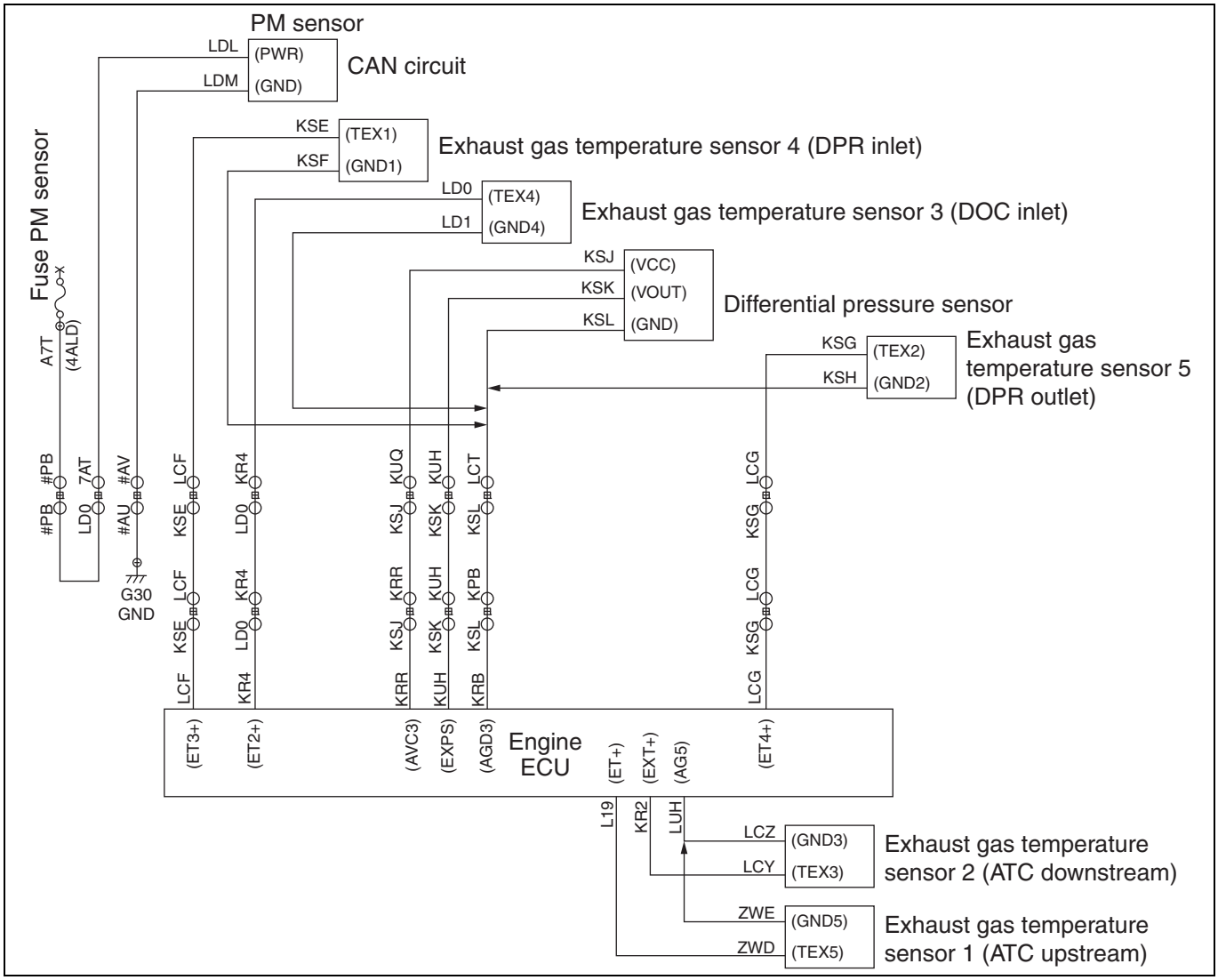


SAPH16F010300667

### 1. Technical description

- It detects a difference between pressure at the inlet of the muffler and atmospheric pressure and monitors any failure or malfunction of the DPR.

**<Description of malfunction>**

- Exhaust pressure cannot be correctly recognized.
- Possible DPR differential pressure sensor failure, harness disconnection, or GND short-circuit

### 2. DTC set condition

(1) Check conditions

- Starter switch ON.
- Battery voltage is in the range of 10 V to 16 V.

The conditions described above remain for 5 seconds or longer.

(2) Judgment criteria

- Output of the sensor remains less than 0.5 V (-6.41 kPa {-0.93 psi}) for 3 seconds.

**3. Reset condition**

- Immediately after normal operation is restored.

**4. Indication, warning or system control regulation when the DTC is set.**

- MIL: ON
- SVS light: OFF

**5. Symptoms on the vehicle when the DTC is set**

**<Symptoms on the vehicle due to backup control (fail safe function)>**

- –

**<Symptoms on the vehicle due to malfunction>**

- –

**6. Pre-inspection work**

- Check that the battery voltage is in the normal range.

**7. After-inspection work**

- Clear all past DTCs.
- Check that no DTC is stored after test drive.

**8. Estimated failure factors**

- Abnormal resistance of sensor
- Harness disconnection or short-circuit
- Looseness or poor contact of connector.
- Malfunction of engine ECU sensor power supply or internal circuit.

## INSPECTION PROCEDURE: P1427

| 1 | Inspect the differential pressure sensor connector |
|---|---|

1. Check the connection of the differential pressure sensor connector (Looseness and poor contact).

**Was any failure found?**

**YES**

**Connect securely, repair if needed.**
**Perform "After-inspection work" of INFORMATION section.**

**NO**

**Go to step 2.**

| 2 | Inspect the differential pressure sensor |
|---|---|

1. Check the installation of the differential pressure sensor.
2. Make sure there is no dirt or damage to the differential pressure sensor.

**Was any failure found?**

**YES**

**Clean the differential pressure sensor and install it properly.**
**If damaged, replace the differential pressure sensor.**
**Perform "After-inspection work" of INFORMATION section.**

**NO**

**Go to step 3.**

| 3 | Inspect the differential pressure sensor unit |
|---|---|

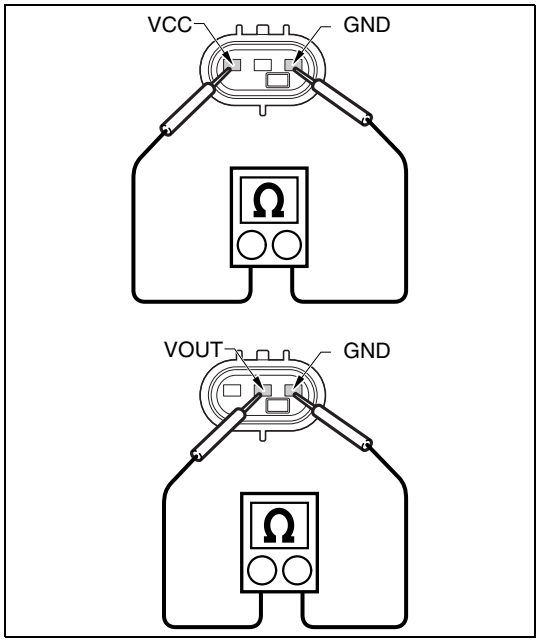


SAPH16F010300668

1. Set the starter switch to the "LOCK" position.
2. Disconnect the DPR differential pressure sensor connector.
3. Use the electrical tester to measure the resistance between the terminals of the differential pressure sensor.

| Measurement conditions | Tester connections | Standard values |
|---|---|---|
| Starter switch: LOCK | Differential pressure sensor VCC – GND VOUT – GND | 2 – 15 kΩ |

**Do the measurements meet the standard value?**

**YES**

**Go to step 4.**

**NO**

**Replace the differential pressure sensor. Perform "After-inspection work" of INFORMATION section.**

| 4 | Inspect the power supply of the differential pressure sensor |
|---|---|

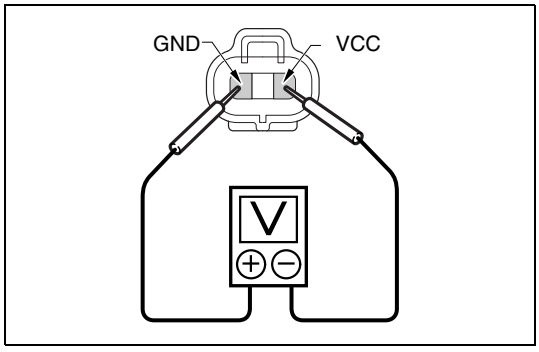


SAPH16F010300669

1. Set the starter switch to the "ON" position.
2. Use the electrical tester to measure the voltage between the terminals of the differential pressure sensor vehicle-side connector.

| Measurement conditions | Tester connections | Standard values |
|---|---|---|
| Starter switch: ON | Differential pressure sensor vehicle-side connector VCC – GND | 4.5 – 5.5 V |

**Do the measurements meet the standard value?**

**YES**

**Go to step 5.**

**NO**

**Go to step 7.**

## 5 Inspect for short-circuit of the differential pressure sensor harness

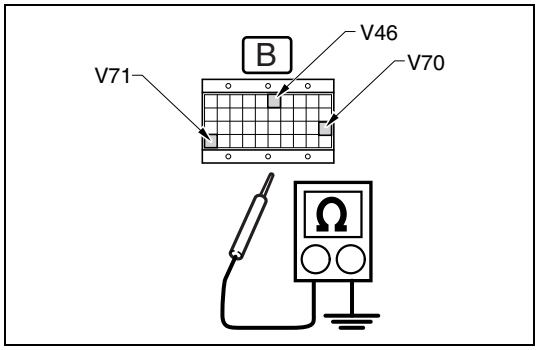


SAPH16F010300670

1. Set the starter switch to the "LOCK" position.
2. Connect the signal check harness to the engine ECU vehicle-side harness. (Do not connect the harness to the ECU.)
3. Use the electrical tester to measure the resistance between the terminals of the engine ECU (signal check harness) and ground.

| Measurement conditions | Tester connections | Standard values |
|---|---|---|
| **Starter switch: LOCK** | **Engine ECU (signal check harness) AVC3(V71) – Ground EXPS(V70) – Ground AGD3(V46) – Ground** | **∞ Ω** |

**Do the measurements meet the standard value?**

**YES**

**Go to step 6.**

**NO**

**Repair or replace the harness.**
**Perform "After-inspection work" of INFORMATION section.**

## 6 Inspect disconnection of the differential pressure sensor harness

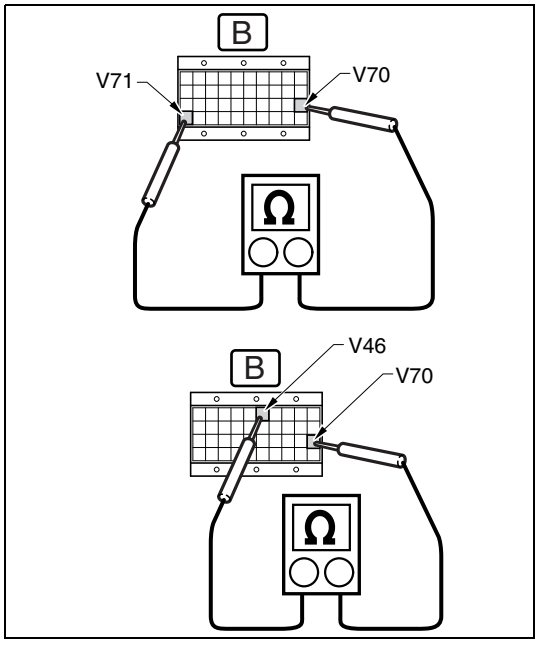


SAPH16F010300671

1. Connect the differential pressure sensor connector.
2. Use the electrical tester to measure the resistance between the terminals of the engine ECU (signal check harness).

| Measurement conditions | Tester connections | Standard values |
|---|---|---|
| **Starter switch: LOCK** | **Engine ECU (signal check harness) AVC3(V71) – EXPS(V70) AGD3(V46) – EXPS(V70)** | **2 – 15 kΩ** |

**Do the measurements meet the standard value?**

| YES | NO |
|---|---|
| **Go to step 7.** | **Repair or replace the harness. Perform "After-inspection work" of INFORMATION section.** |

| 7 | Check the DTC detected (Engine ECU) [HINO DX II ] |
|---|---|

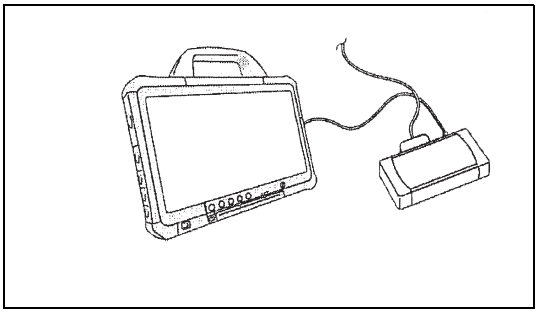

SAPH16F010300672

1. Perform engine warm-up. (engine coolant temperature: 60 °C {140 °F} or more)
2. Stop the engine and set the starter switch to the "LOCK" position.
3. Connect the vehicle to HINO DX II .
4. Set the starter switch to the "ON" position.
5. Select [Engine] and check if P1427 have been detected.

**Has DTC P1427 been detected?**

| YES | NO |
|---|---|
| **Replace the engine ECU. Perform "After-inspection work" of INFORMATION section.** | **Procedure completed. Perform "After-inspection work" of INFORMATION section.** |

# DTC: P1428

EN01H16F01030F03001122

## P1428: Differential pressure sensor - out of range (Out of range high)

INFORMATION

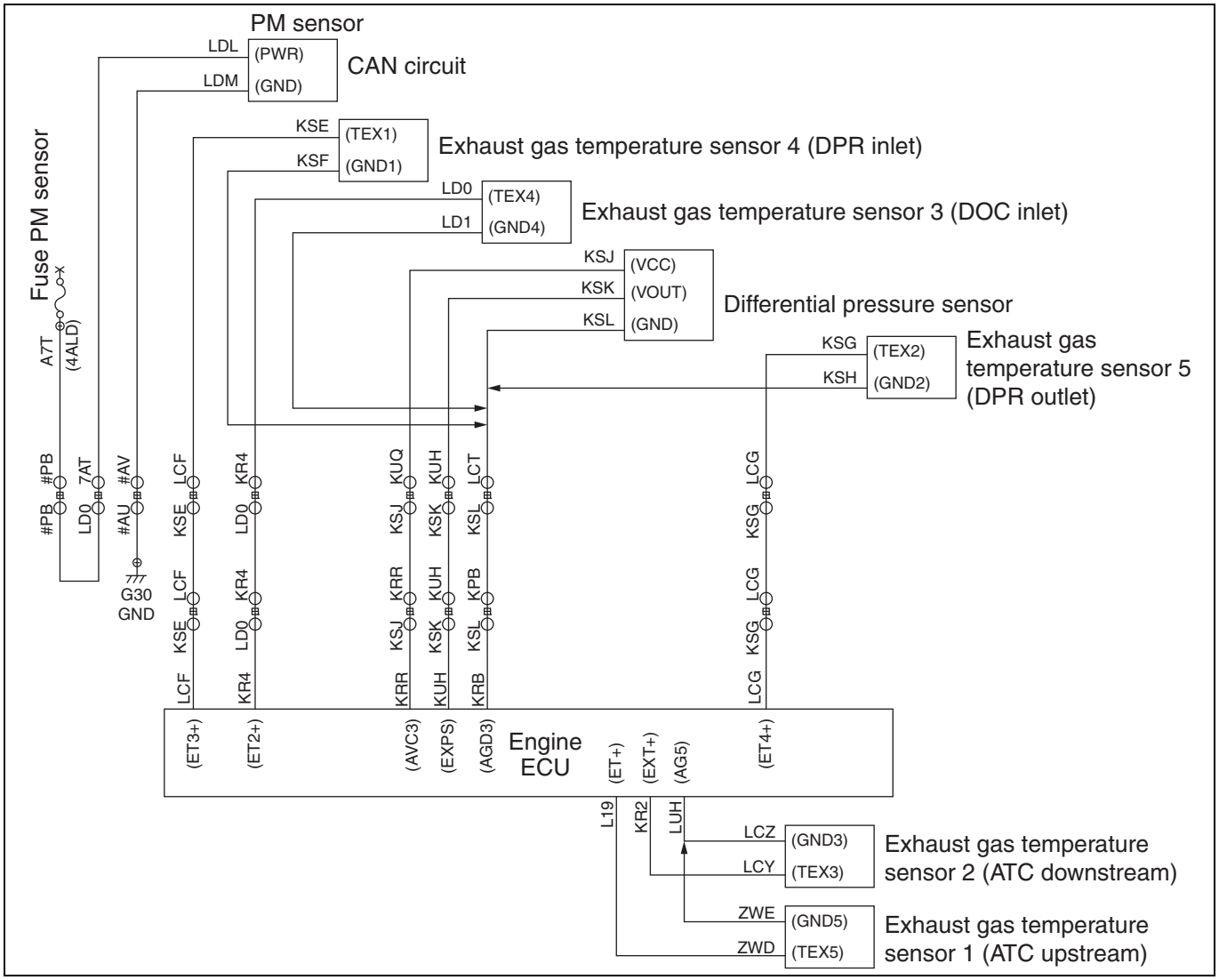


SAPH16F010300673

### 1. Technical description

- It detects a difference between pressure at the inlet of the muffler and atmospheric pressure and monitors any failure or malfunction of the DPR.

**<Description of malfunction>**

- Exhaust pressure cannot be correctly recognized.
- Possible DPR differential pressure sensor failure or harness +B short

### 2. DTC set condition

(1) Check conditions

- Starter switch ON.
- Battery voltage is in the range of 10 V to 16 V.

The conditions described above remain for 5 seconds or longer.

(2) Judgment criteria

- Output of the sensor remains greater than 4.46 V (95.1 kPa {13.8 psi}) for 3 seconds.

**3. Reset condition**

- Immediately after normal operation is restored.

**4. Indication, warning or system control regulation when the DTC is set.**

- MIL: ON
- SVS light: OFF

**5. Symptoms on the vehicle when the DTC is set**

**<Symptoms on the vehicle due to backup control (fail safe function)>**

- –

**<Symptoms on the vehicle due to malfunction>**

- –

**6. Pre-inspection work**

- Check that the battery voltage is in the normal range.

**7. After-inspection work**

- Clear all past DTCs.
- Check that no DTC is stored after test drive.

**8. Estimated failure factors**

- Abnormal resistance of sensor
- Harness disconnection or short-circuit
- Looseness or poor contact of connector.
- Malfunction of engine ECU sensor power supply or internal circuit

## INSPECTION PROCEDURE: P1428

| 1 | Inspect the differential pressure sensor connector |
|---|---|

1. Check the connection of the differential pressure sensor connector (Looseness and poor contact).

**Was any failure found?**

**YES**

**Connect securely, repair if needed.**
**Perform "After-inspection work" of INFORMATION section.**

**NO**

**Go to step 2.**

| 2 | Inspect the differential pressure sensor |
|---|---|

1. Check the installation of the differential pressure sensor.
2. Make sure there is no dirt or damage to the differential pressure sensor.

**Was any failure found?**

**YES**

**Clean the differential pressure sensor and install it properly.**
**If damaged, replace the differential pressure sensor.**
**Perform "After-inspection work" of INFORMATION section.**

**NO**

**Go to step 3.**

| 3 | Inspect the differential pressure sensor power supply |
|---|---|

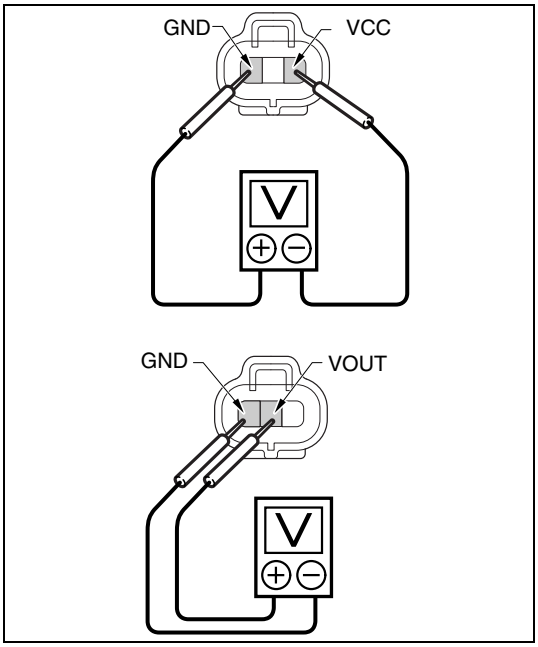


SAPH16F010300674

1. Set the starter switch to the "ON" position.
2. Use the electrical tester to measure the voltage between the terminals of the differential pressure sensor vehicle-side connector.

| Measurement conditions | Tester connections | Standard values |
|---|---|---|
| Starter switch: ON | Differential pressure sensor vehicle-side connector<br>VCC – GND<br>VOUT – GND | 4.5 – 5.5 V |

**Do the measurements meet the standard value?**

**YES**

**Go to step 7.**

**NO**

**Go to step 4.**

| 4 | Inspect the differential pressure sensor unit |
|---|---|

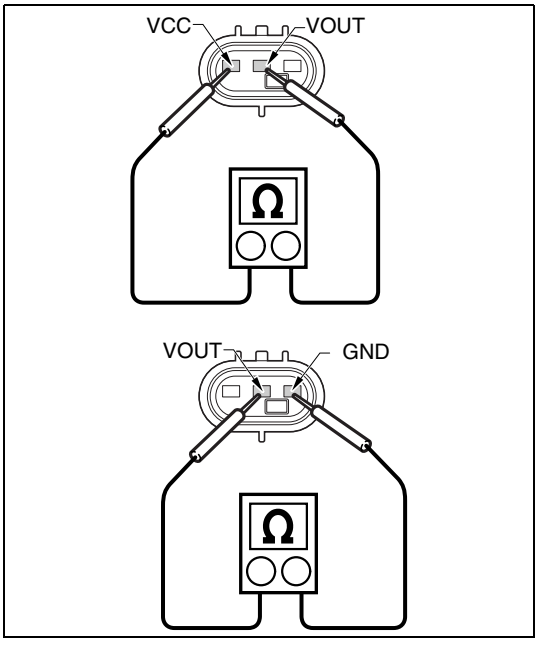


SAPH16F010300675

1. Set the starter switch to the "LOCK" position.
2. Disconnect the differential pressure sensor connector.
3. Use the electrical tester to measure the resistance between the terminals of the differential pressure sensor.

| Measurement conditions | Tester connections | Standard values |
|---|---|---|
| Starter switch: LOCK | Differential pressure sensor connector<br>VCC – VOUT<br>VOUT – GND | 2 – 15 kΩ |

**Do the measurements meet the standard value?**

**YES**

**Go to step 5.**

**NO**

**Replace the differential pressure sensor.**
**Perform "After-inspection work" of INFORMATION section.**

## 5 Inspect for short-circuit of the differential pressure sensor harness

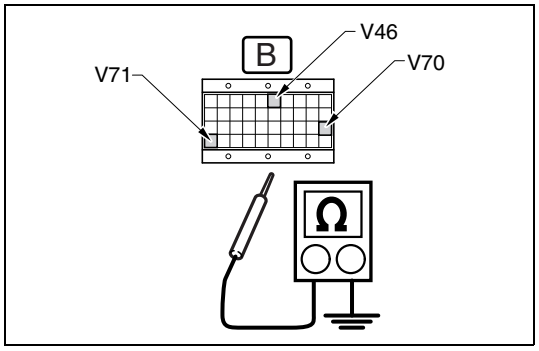


SAPH16F010300676

1. Set the starter switch to the "LOCK" position.
2. Connect the signal check harness to the engine ECU vehicle-side harness. (Do not connect the harness to the ECU.)
3. Use the electrical tester to measure the resistance between the terminals of the engine ECU (signal check harness) and ground.

| Measurement conditions | Tester connections | Standard values |
|---|---|---|
| **Starter switch: LOCK** | **Engine ECU (signal check harness) AVC3(V71) – Ground<br>EXPS(V70) – Ground<br>AGD3(V46) – Ground** | ∞ Ω |

**Do the measurements meet the standard value?**

**YES**

**Go to step 6.**

**NO**

**Repair or replace the harness.**
**Perform "After-inspection work" of INFORMATION section.**

| 6 | Inspect disconnection of the differential pressure sensor harness |
|---|---|

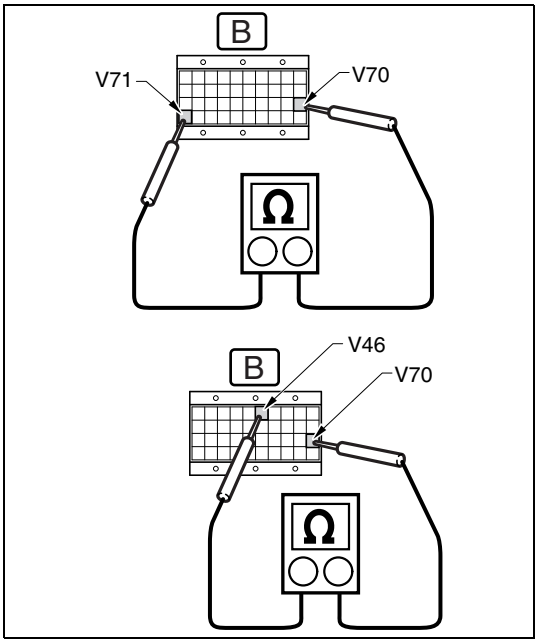

SAPH16F010300677

1. Connect the differential pressure sensor connector.
2. Use the electrical tester to measure the resistance between the terminals of the engine ECU (signal check harness).

| Measurement conditions | Tester connections | Standard values |
|---|---|---|
| **Starter switch: LOCK** | **Engine ECU (signal check harness) AVC3(V71) – EXPS(V70) AGD3(V46) – EXPS(V70)** | **2 – 15 kΩ** |

**Do the measurements meet the standard value?**

**YES**

**Go to step 7.**

**NO**

**Repair or replace the harness.**
**Perform "After-inspection work" of INFORMATION section.**

| 7 | Check the DTC detected (Engine ECU) [HINO DX II ] |
|---|---|

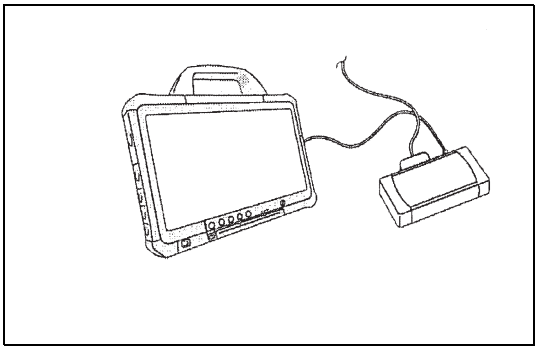
SAPH16F010300678

1. Perform engine warm-up. (engine coolant temperature: 60 °C {140 °F} or more)
2. Stop the engine and set the starter switch to the "LOCK" position.
3. Connect the vehicle to HINO DX II .
4. Set the starter switch to the "ON" position.
5. Select [Engine] and check if P1428 has been detected.

**Has DTC P1428 been detected?**

**YES**

**Replace the engine ECU.**
**Perform "After-inspection work" of INFORMATION section.**

**NO**

**Procedure completed.**
**Perform "After-inspection work" of INFORMATION section.**

# DTC: P1458

EN01H16F01030F03001123

## P1458: Controller high temperature (EGR actuator over temp warning level)

INFORMATION

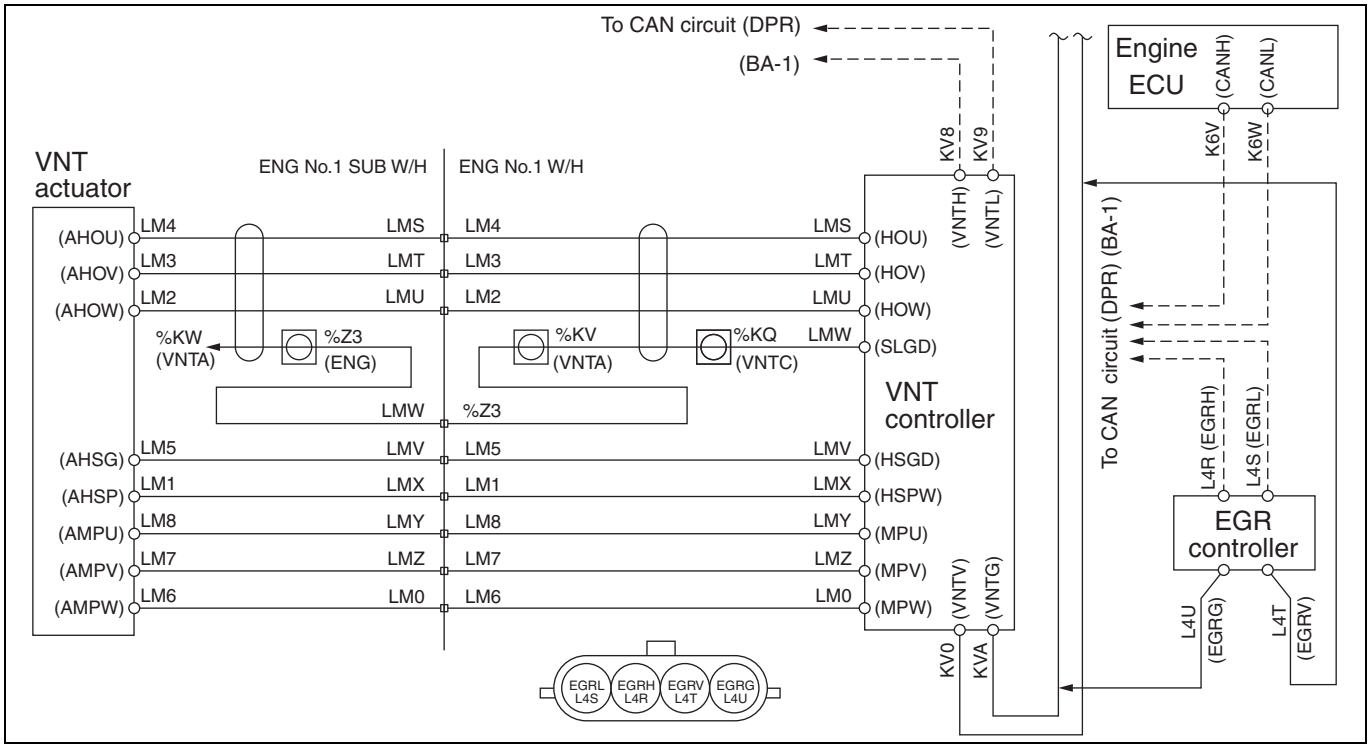


SAPH16F010300679

**1. Technical description**

- EGR valve is a butterfly type.
- EGR valve opening is controlled by engine speed and amount of intake air.
- EGR valve opening is adjusted by engine ECU and CAN communication.
- EGR valve will not operate when engine coolant temperature is low (≤ 40 °C {104 °F}).
- DTC is issued when failure message is received from EGR actuator unit.

**<Description of malfunction>**

- EGR actuator system is malfunctioning.

**2. DTC set condition**

(1) DTC detection condition

- Battery voltage is in the range of 8 V to 16 V.
- There is no disconnection in harness connected to EGR valve.
- Starter switch ON. (Not related to engine speed)

(2) Judgment criteria

- Actual actuator temperature is 150 °C {320 °F} or greater and under 165 °C {329 °F}, and this condition continues for 0.6 sec.

**3. Reset condition**

- Normal operation is restored and accelerator is not being operated.

**4. Indication, warning or system control regulation when the DTC is set.**

- MIL: OFF
- SVS light: OFF
- Engine output is restricted.

**5. Symptoms on the vehicle when the DTC is set**

**<Symptoms on the vehicle due to backup control (fail safe function)>**

- Engine output is insufficient.

**<Symptoms on the vehicle due to malfunction>**

- –

**6. Pre-inspection work**

- Check that the battery voltage is in the normal range.

**7. After-inspection work**

- Clear all past DTCs.
- Check that no DTC is detected after test drive.

**8. Estimated failure factors**

- Abnormal engine room interior temperature
- Abnormal heat rise in motor or element inside EGR actuator.
- Soot adhesion and damage due to hard foreign substances on EGR valve sealing face and gas passageway. (Hardened carbon may peel off from EGR cooler upstream of EGR valve.)

## INSPECTION PROCEDURE: P1458

| 1 | Check the DTC detected (Engine ECU) [HINO DX II ] |
|---|---|

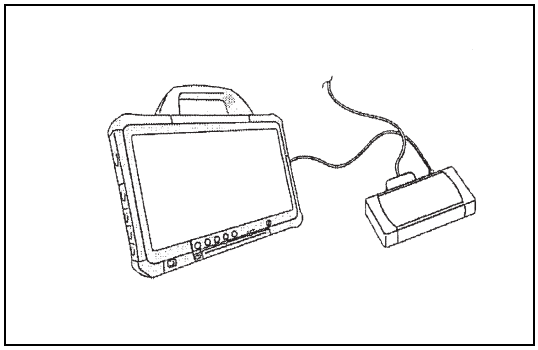

SAPH16F010300680

1. Set the starter switch to the "LOCK" position.
2. Connect the vehicle to HINO DX II .
3. Set the starter switch to the "ON" position.
4. Select [Engine] and check if any DTC other than P1458 have been detected.

**Has a DTC other than P1458 been detected?**

**YES**

**Go to the diagnostic procedure of a related DTC.**

**NO**

**Go to step 2.**

| 2 | Inspect the EGR valve |
|---|---|

1. Check the valve sealing face and gas passageway for soot accumulation and damage due to foreign substances.
2. Check if there is soot obstructing the exhaust gas passageway inlet or outlet.

**Was any failure found?**

**YES**

**Remove foreign substances and clean the EGR valve.**
**Replace the EGR valve if it is damaged.**
**Perform "After-inspection work" of INFORMATION section.**

**NO**

**Go to step 3.**

| 3 | Inspect the EGR valve connector |
|---|---|

1. Check the connection of the EGR valve connector (Looseness and poor contact).

**Was any failure found?**

**YES**

**Connect securely, repair if needed.**
**Perform "After-inspection work" of INFORMATION section.**

**NO**

**Go to step 4.**

| 4 | Inspect the EGR power supply |
|---|---|

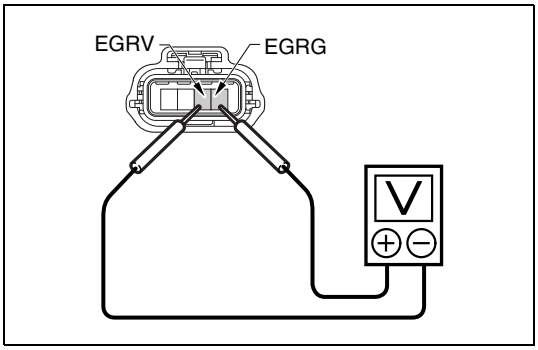


SAPH16F010300681

1. Set the starter switch to the "LOCK" position.
2. Disconnect the EGR valve connector.
3. Set the starter switch to the "ON" position.
4. Use the electrical tester to measure the voltage between the terminals of the EGR valve vehicle-side connector.

| Measurement conditions | Tester connections | Standard values |
|---|---|---|
| Starter switch: ON | EGR valve vehicle-side connector EGRV – EGRG | 8 – 16 V |

**Do the measurements meet the standard value?**

**YES**

**Go to step 5.**

**NO**

**Check the wire harness (actuator power supply and ground) and battery voltage. Repair or replace parts as needed.**
**Perform "After-inspection work" of INFORMATION section.**

| 5 | Inspect the response delay of the EGR valve [HINO DX II ] |
|---|---|

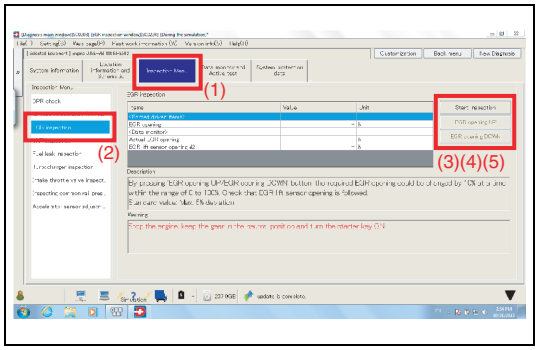


SAPH16F010300682

1. Select [Inspection Menu] and then [EGR inspection] from the menu, then inspect the response delay at the Target EGR position and Actual EGR position.

**⚠ CAUTION**
**Perform the inspection while the engine is stopped to avoid damages.**

<Inspection procedure>
(1) Select [Inspection Menu].
(2) Select [EGR inspection].
(3) Click [Start inspection].
(4) Select [EGR opening UP]:
• Inspect the response delay at each step of the Target EGR position and Actual EGR position from 0 to 100 %.
(5) Select [EGR opening DOWN]:
• Inspect the response delay at each step of the Target EGR position and Actual EGR position from 100 to 0 %.

**HINT**
**The EGR opening position changes of around 10 % per step between 0 – 100 %.**

| Standard values |
|---|
| From the Target EGR position to the Actual EGR position, the response delay should be within 5 seconds. |

**Do the measurements meet the standard value?**

**YES**

**Replace the engine ECU.**
**Perform "After-inspection work" of INFORMATION section.**

**NO**

**Replace the EGR valve.**
**Perform "After-inspection work" of INFORMATION section.**

# DTC: P1459

EN01H16F01030F03001124

## P1459: Controller high temperature (EGR actuator over temp severe level)

INFORMATION

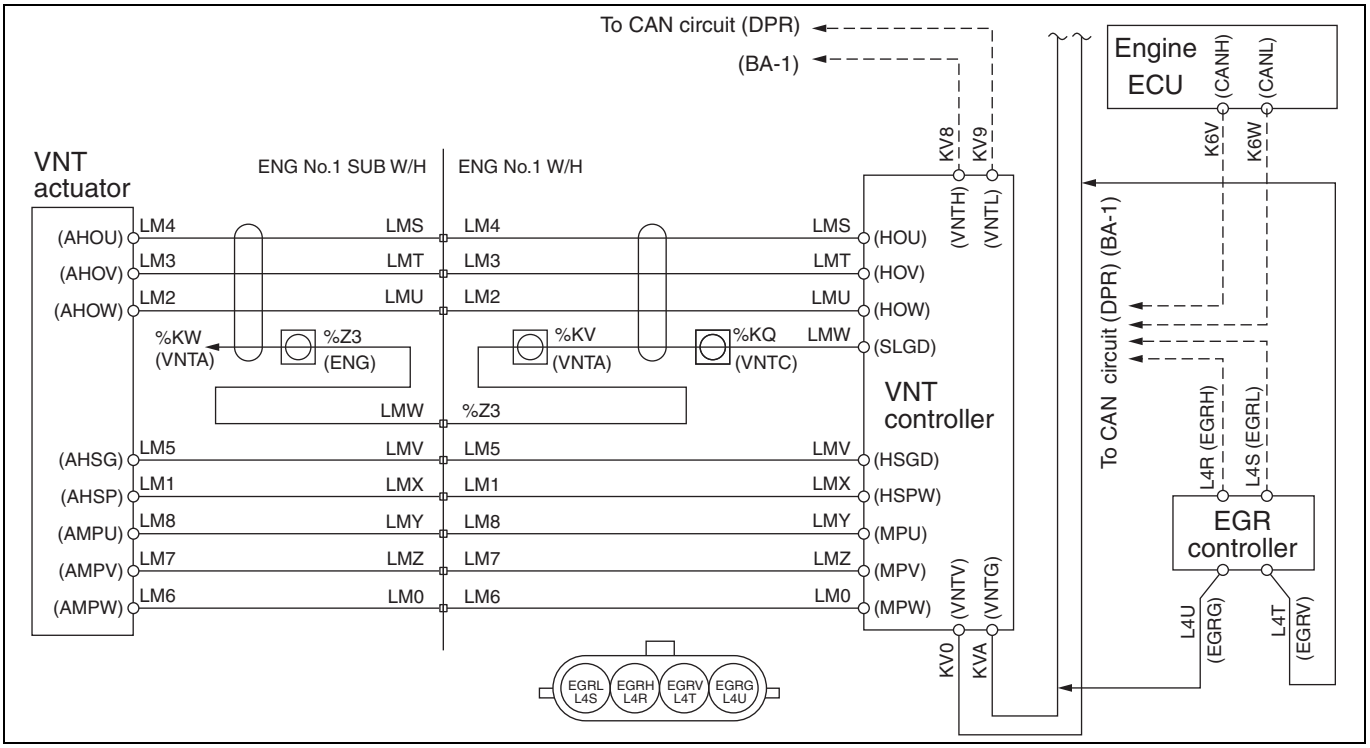


SAPH16F010300683

**1. Technical description**

- EGR valve is a butterfly type.
- EGR valve opening is controlled by engine speed and amount of intake air.
- EGR valve opening is adjusted by engine ECU and CAN communication.
- EGR valve will not operate when engine coolant temperature is low (≤ 40 °C {104 °F}).
- DTC is issued when failure message is received from EGR actuator unit.

**<Description of malfunction>**

- EGR actuator system is malfunctioning.

**2. DTC set condition**

(1) DTC detection condition

- Battery voltage is in the range of 8 V to 16 V.
- There is no disconnection in harness connected to EGR valve.
- Starter switch ON. (Not related to engine speed)

(2) Judgment criteria

- Actual actuator temperature is 165 °C {329 °F}, and this condition continues for 0.6 sec.

**3. Reset condition**

- Normal operation is restored and accelerator is not being operated.

**4. Indication, warning or system control regulation when the DTC is set.**

- MIL: ON
- SVS light: OFF
- Engine output is restricted.

**5. Symptoms on the vehicle when the DTC is set**

**<Symptoms on the vehicle due to backup control (fail safe function)>**

- Engine output is insufficient.

**<Symptoms on the vehicle due to malfunction>**

- –

**6. Pre-inspection work**

- Check that the battery voltage is in the normal range.

**7. After-inspection work**

- Clear all past DTCs.
- Check that no DTC is detected after test drive.

**8. Estimated failure factors**

- Abnormal engine room interior temperature.
- Abnormal heat rise in motor or element inside EGR actuator.
- Soot adhesion and damage due to hard foreign substances on EGR valve sealing face and gas passageway (Hardened carbon may peel off from EGR cooler upstream of EGR valve.)

## INSPECTION PROCEDURE: P1459

| 1 | Check the DTC detected (Engine ECU) [HINO DX II ] |
|---|---|

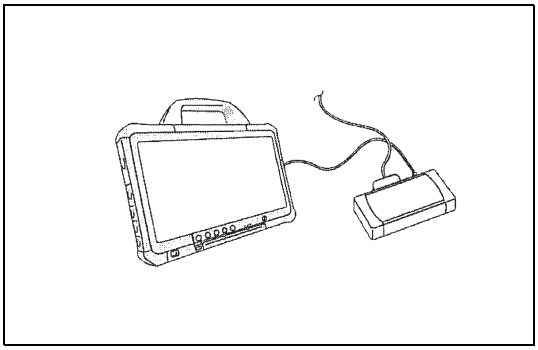

SAPH16F010300684

1. Set the starter switch to the "LOCK" position.
2. Connect the vehicle to HINO DX II .
3. Set the starter switch to the "ON" position.
4. Select [Engine] and check if any DTC other than P1459 has been detected.

**Has a DTC other than P1459 been detected?**

**YES**

**Go to the diagnostic procedure of a related DTC.**

**NO**

**Go to step 2.**

| 2 | Inspect the EGR valve |
|---|---|

1. Check the valve sealing face and gas passageway for soot accumulation and damage due to foreign substances.
2. Check if there is soot obstructing the exhaust gas passageway inlet or outlet.

**Was any failure found?**

**YES**

**Remove foreign substances and clean the EGR valve.**
**Replace the EGR valve if it is damaged.**
**Perform "After-inspection work" of INFORMATION section.**

**NO**

**Go to step 3.**

| 3 | Inspect the EGR valve connector |
|---|---|

1. Check the connection of the EGR valve connector (Looseness and poor contact).

**Was any failure found?**

**YES**

**Connect securely, repair if needed.**
**Perform "After-inspection work" of INFORMATION section.**

**NO**

**Go to step 4.**

| 4 | Check the EGR valve power supply |
|---|---|

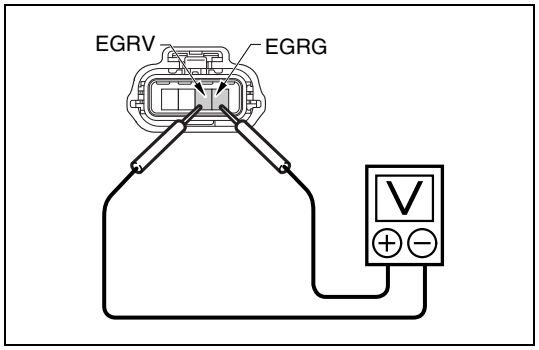

SAPH16F010300685

1. Set the starter switch to the "LOCK" position.
2. Disconnect the EGR valve connector.
3. Set the starter switch to the "ON" position.
4. Use the electrical tester to measure the voltage between the terminals of the EGR valve vehicle-side connector.

| Measurement conditions | Tester connections | Standard values |
|---|---|---|
| Starter switch: ON | EGR valve vehicle-side connector EGRV – EGRG | 8 – 16 V |

**Do the measurements meet the standard value?**

**YES**

**Go to step 5.**

**NO**

**Check the wire harness (actuator power supply and ground) and battery voltage. Repair or replace parts as needed.**
**Perform "After-inspection work" of INFORMATION section.**

| 5 | Inspect the response delay of the EGR valve [HINO DX II ] |
|---|---|

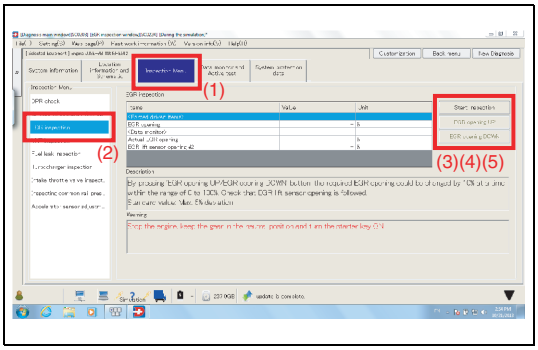


SAPH16F010300686

1. Select [Inspection Menu] and then [EGR inspection] from the menu, then inspect the response delay at the Target EGR position and Actual EGR position.

**⚠ CAUTION**
**Perform the inspection while the engine is stopped to avoid damages.**

<Inspection procedure>
(1) Select [Inspection Menu].
(2) Select [EGR inspection].
(3) Click [Start inspection].
(4) Select [EGR opening UP]:
• Inspect the response delay at each step of the Target EGR position and Actual EGR position from 0 to 100 %.
(5) Select [EGR opening DOWN]:
• Inspect the response delay at each step of the Target EGR position and Actual EGR position from 100 to 0 %.

**HINT**
**The EGR opening position changes of around 10 % per step between 0 – 100 %.**

| Standard values |
|---|
| From the Target EGR position to the Actual EGR position, the response delay should be within 5 seconds. |

**Do the measurements meet the standard value?**

**YES**

**Replace the engine ECU.**
**Perform "After-inspection work" of INFORMATION section.**

**NO**

**Replace the EGR valve.**
**Perform "After-inspection work" of INFORMATION section.**

# DTC: P14B0

EN01H16F01030F03001125

## P14B0: Controller store data error (EGR actuator abnormal information reading)

INFORMATION

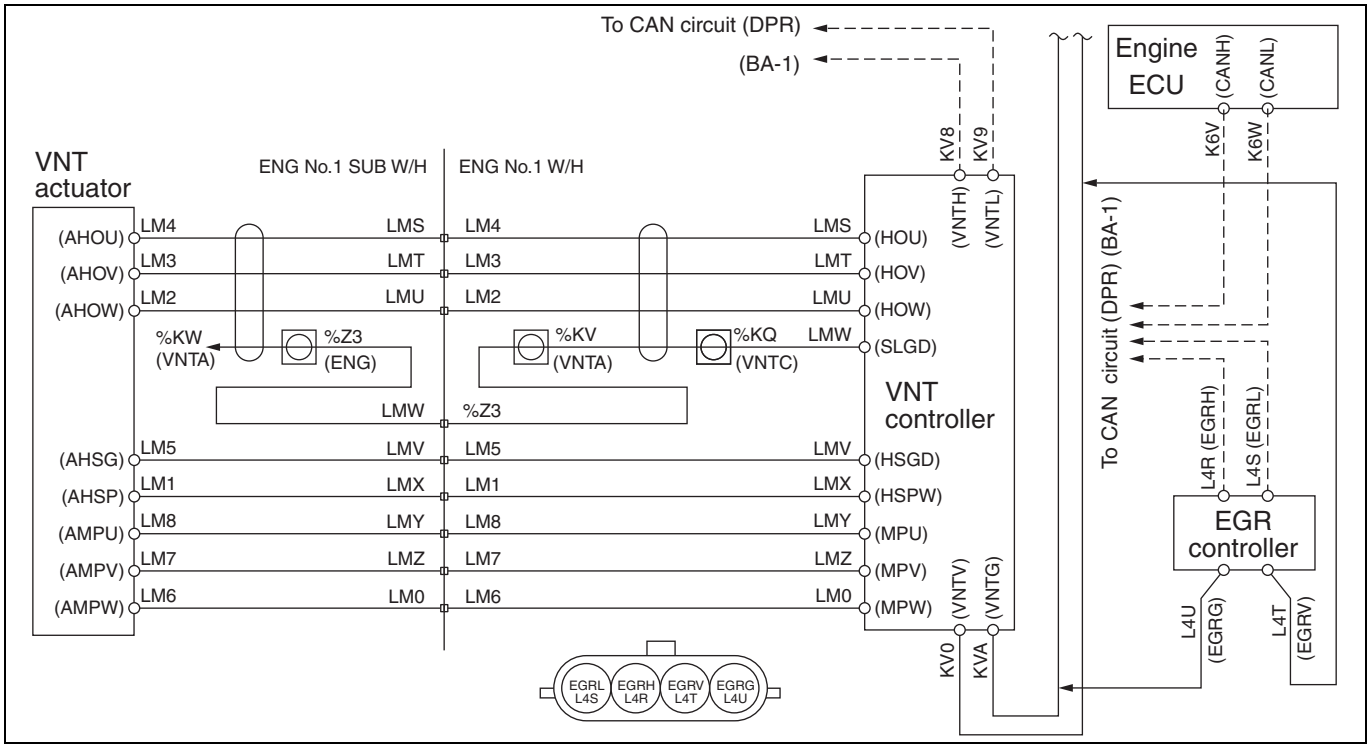


SAPH16F010300687

**1. Technical description**

- EGR valve is a butterfly type.
- EGR valve opening is controlled by engine speed and amount of intake air.
- EGR valve opening is adjusted by engine ECU and CAN communication.
- EGR valve will not operate when engine coolant temperature is low (≤ 40 °C {104 °F})
- DTC is issued when failure message is received from EGR actuator unit.

**<Description of malfunction>**

- EGR actuator system is malfunctioning.

**2. DTC set condition**

(1) DTC detection condition

- Battery voltage is in the range of 8 V to 16 V.
- There is no disconnection in harness connected to EGR valve.
- Starter switch ON. (Not related to engine speed.)

(2) Judgment criteria

- When data stored in actuator cannot be correctly read.

**3. Reset condition**

- When power is supplied again and judgment criteria are resolved.

**4. Indication, warning or system control regulation when the DTC is set.**

- MIL: ON
- SVS light: OFF
- Engine output is restricted.

**5. Symptoms on the vehicle when the DTC is set**

**<Symptoms on the vehicle due to backup control (fail safe function)>**

- Engine output is insufficient.

**<Symptoms on the vehicle due to malfunction>**

- –

**6. Pre-inspection work**

- Check that the battery voltage is in the normal range.

**7. After-inspection work**

- Clear all past DTCs.
- Check that no DTC is detected after test drive.

**8. Estimated failure factors**

- Damaged element inside EGR valve actuator

## INSPECTION PROCEDURE: P14B0

| 1 | Check the DTC detected 1 (Engine ECU) [HINO DX II ] |
|---|---|

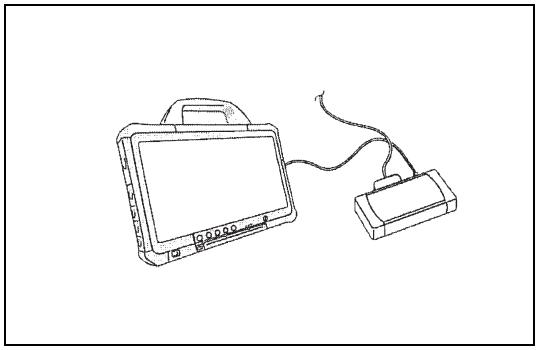

SAPH16F010300688

1. Set the starter switch to the "LOCK" position.
2. Connect the vehicle to HINO DX II .
3. Set the starter switch to the "ON" position.
4. Select [Engine] and check if any DTC other than P14B0 have been detected.

**Has a DTC other than P14B0 been detected?**

**YES**

**Go to the diagnostic procedure of a related DTC.**

**NO**

**Go to step 2.**

| 2 | Inspect the EGR valve connector |
|---|---|

1. Check the connection of the EGR valve connector (Looseness and poor contact).

**Was any failure found?**

**YES**

**Connect securely, repair if needed.**
**Perform "After-inspection work" of INFORMATION section.**

**NO**

**Go to step 3.**

| 3 | Inspect the EGR valve power supply |
|---|---|

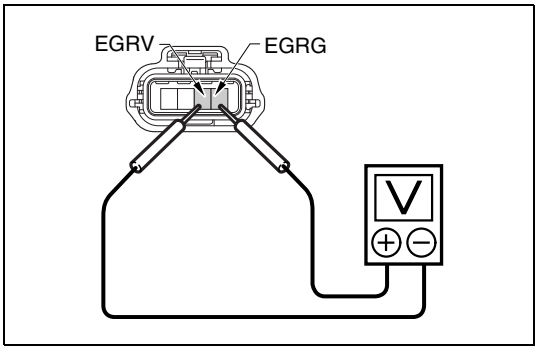


SAPH16F010300689

1. Set the starter switch to the "LOCK" position.
2. Disconnect the EGR valve connector.
3. Set the starter switch to the "ON" position.
4. Use the electrical tester to measure the voltage between the terminals of the EGR valve vehicle-side connector.

| Measurement conditions | Tester connections | Standard values |
|---|---|---|
| **Starter switch: ON** | **EGR valve vehicle-side connector EGRV – EGRG** | **8 – 16 V** |

**Do the measurements meet the standard value?**

**YES**

**Replace the EGR valve, go to step 4.**

**NO**

**Check the wire harness (actuator power supply and ground) and battery voltage. Repair or replace parts as needed.**
**Perform "After-inspection work" of INFORMATION section.**

| 4 | Check the DTC detected 2 (Engine ECU) [HINO DX II ] |
|---|---|

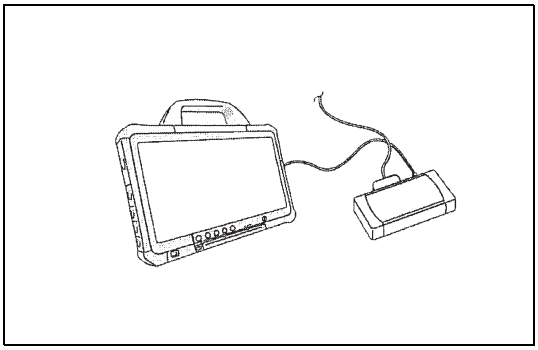

SAPH16F010300690

1. Set the starter switch to the "ON" position.
2. Select [Engine] and check if P14B0 have been detected.

**Has DTC P14B0 been detected?**

**YES**

**Replace the engine ECU.**
**Perform "After-inspection work" of INFORMATION section.**

**NO**

**Procedure completed.**
**Perform "After-inspection work" of INFORMATION section.**

# DTC: P14B2

EN01H16F01030F03001126

## P14B2: EGR controller power supply open circuit (EGR actuator power supply open circuit)

INFORMATION

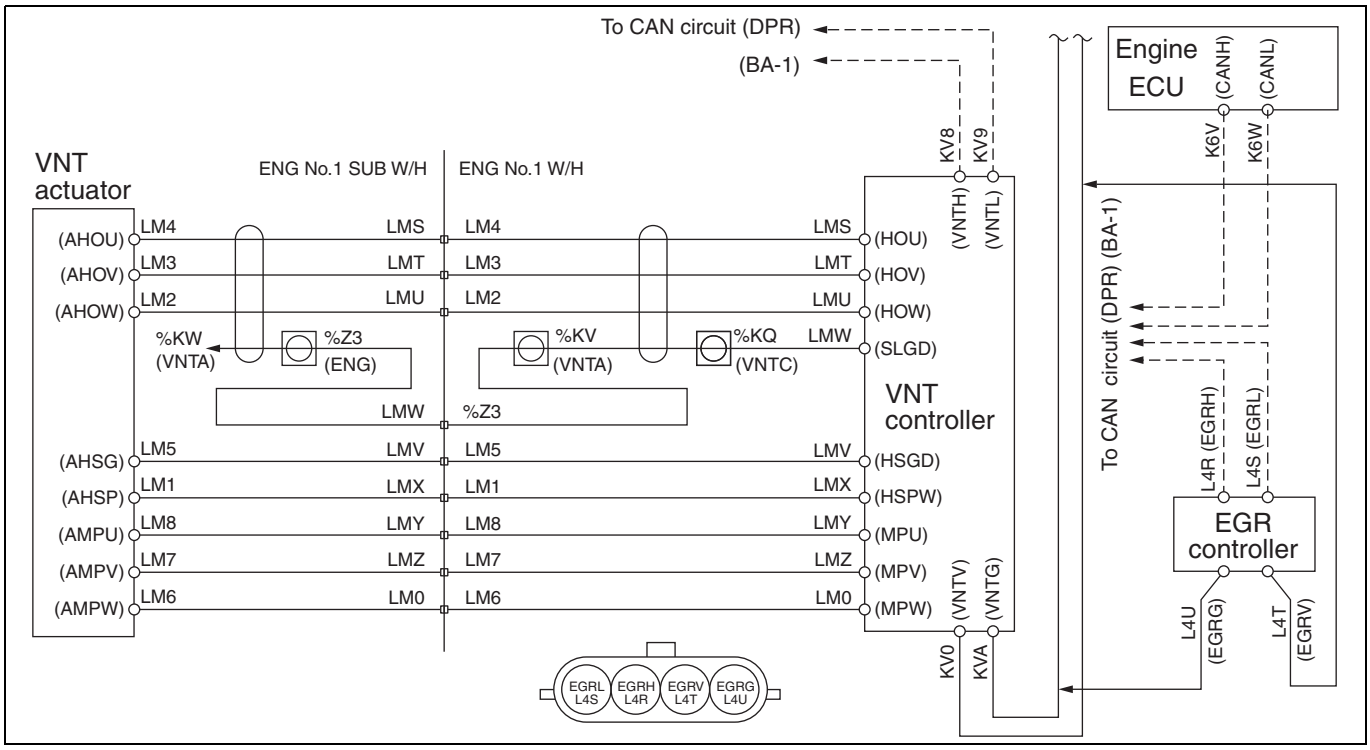


SAPH16F010300691

**1. Technical description**

- EGR valve is a butterfly type.
- EGR valve opening is controlled by engine speed and amount of intake air.
- EGR valve opening is adjusted by engine ECU and CAN communication.
- EGR valve will not operate when engine coolant temperature is low (≤ 40 °C {104 °F})
- DTC is issued when failure message is received from EGR actuator unit.

**<Description of malfunction>**

- EGR actuator system is malfunctioning.

**2. DTC set condition**

(1) DTC detection condition

- Battery voltage is in the range of 8 V to 16 V.
- There is no disconnection in harness connected to EGR valve.
- Starter switch ON. (Not related to engine speed.)

(2) Judgment criteria

- When difference in power supply voltage input with 2 systems is at least 1 V, and this condition continues for 1 second.

**3. Reset condition**

- Normal operation is restored and accelerator is not being operated.

**4. Indication, warning or system control regulation when the DTC is set.**

- MIL: ON
- SVS light: OFF
- Engine output is restricted.

**5. Symptoms on the vehicle when the DTC is set**

**<Symptoms on the vehicle due to backup control (fail safe function)>**

- Engine output is insufficient.

**<Symptoms on the vehicle due to malfunction>**

- –

**6. Pre-inspection work**

- Check that the battery voltage is in the normal range.

**7. After-inspection work**

- Clear all past DTCs.
- Check that no DTC is detected after test drive.

**8. Estimated failure factors**

- Damaged substrate or element inside EGR valve actuator
- Abnormal battery voltage
- Faulty contact in EGR actuator connector
- Disconnection or short-circuit in sensor harness

## INSPECTION PROCEDURE: P14B2

| 1 | Check the DTC detected 1 (Engine ECU) [HINO DX II ] |
|---|---|

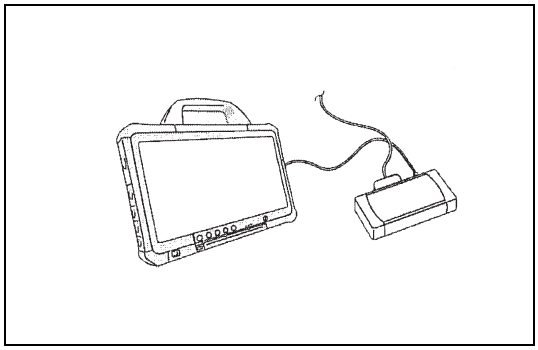

SAPH16F010300692

1. Set the starter switch to the "LOCK" position.
2. Connect the vehicle to HINO DX II .
3. Set the starter switch to the "ON" position.
4. Select [Engine] and check if any DTC other than P14B2 has been detected.

**Has a DTC other than P14B2 been detected?**

**YES**

**Go to the diagnostic procedure of a related DTC.**

**NO**

**Go to step 2.**

| 2 | Inspect the EGR valve connector |
|---|---|

1. Check the connection of the EGR valve connector (Looseness and poor contact).

**Was any failure found?**

**YES**

**Connect securely, repair if needed.**
**Perform "After-inspection work" of INFORMATION section.**

**NO**

**Go to step 3.**

| 3 | Inspect the EGR valve power supply |
|---|---|

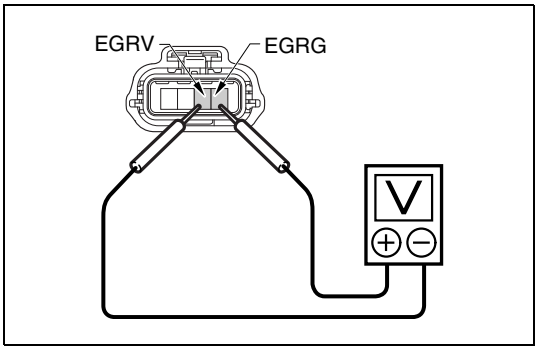


SAPH16F010300693

1. Set the starter switch to the "LOCK" position.
2. Disconnect the EGR valve connector.
3. Set the starter switch to the "ON" position.
4. Use the electrical tester to measure the voltage between the terminals of the EGR valve vehicle-side connector.

| Measurement conditions | Tester connections | Standard values |
|---|---|---|
| **Starter switch: ON** | **EGR valve vehicle-side connector EGRV – EGRG** | **8 – 16 V** |

**Do the measurements meet the standard value?**

**YES**

**Replace the EGR valve, go to step 4.**

**NO**

**Check the wire harness (actuator power supply and ground) and battery voltage. Repair or replace parts as needed.**
**Perform "After-inspection work" of INFORMATION section.**

| 4 | Check the DTC detected 2 (Engine ECU) [HINO DX II ] |
|---|---|

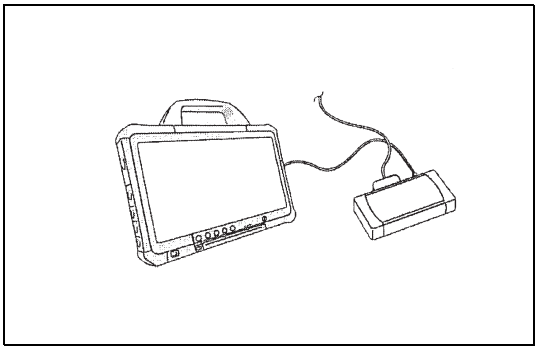

SAPH16F010300694

1. Set the starter switch to the "ON" position.
2. Select [Engine] and check if P14B2 has been detected.

**Has DTC P14B2 been detected?**

**YES**

**Replace the engine ECU.**
**Perform "After-inspection work" of INFORMATION section.**

**NO**

**Procedure completed.**
**Perform "After-inspection work" of INFORMATION section.**

# DTC: P14B3 and P14B4

EN01H16F01030F03001127

## P14B3: Battery voltage (high) (EGR actuator power supply too high)

INFORMATION

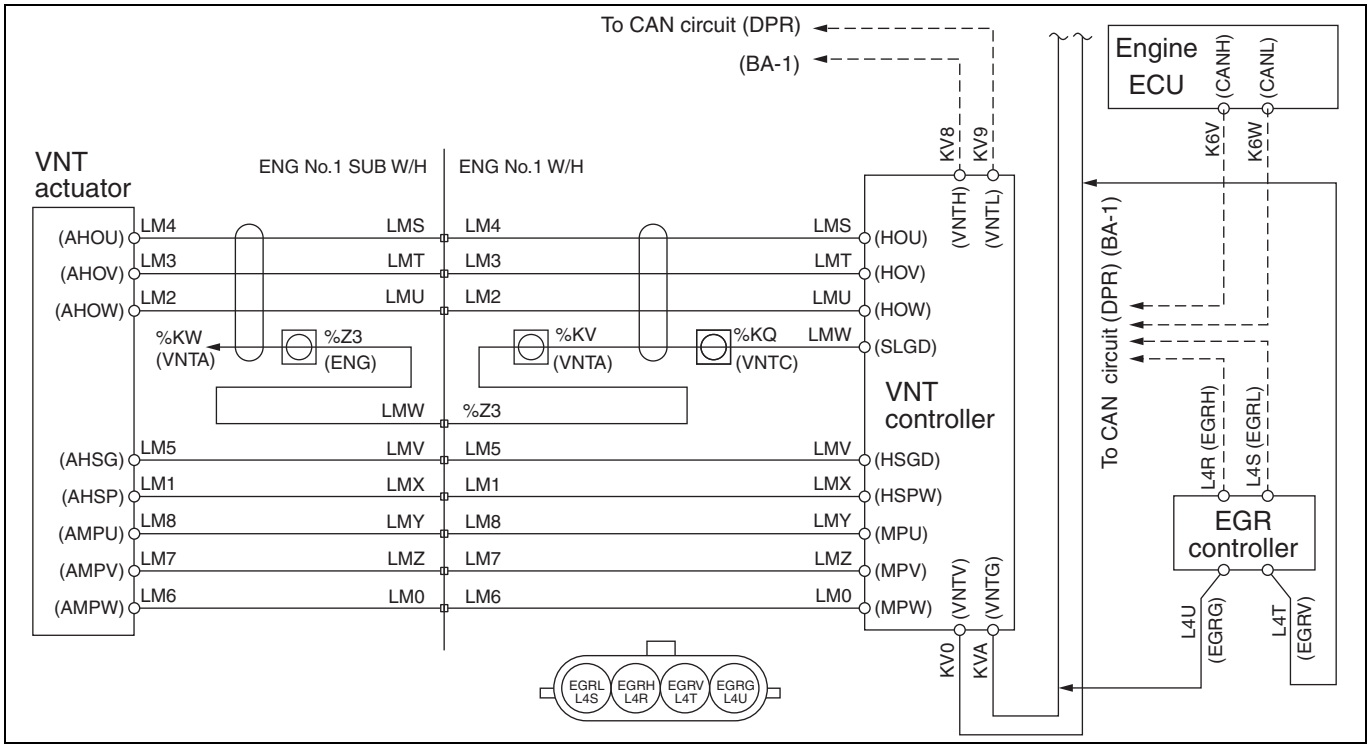


SAPH16F010300695

**1. Technical description**

- EGR valve is a butterfly type.
- EGR valve opening is controlled by engine speed and amount of intake air.
- EGR valve opening is adjusted by engine ECU and CAN communication.
- EGR valve will not operate when engine coolant temperature is low (≤ 40 °C {104 °F})
- Wiping operation from "fully open → fully closed" is conducted as an EGR valve surface cleaning operation when the starter switch is LOCK.

**<Description of malfunction>**

- Failure message is received from EGR controller.

**2. DTC set condition**

(1) DTC detection condition

- Battery voltage is in the range of 8 V to 16 V.
- There is no disconnection in harness connected to EGR valve.
- Starter switch ON. (Not related to engine speed.)

(2) Judgment criteria

- When power supply voltage is 37 V or more, and this condition continues for 1 second.

**3. Reset condition**

- After restoration to normal condition.

**4. Indication, warning or system control regulation when the DTC is set.**

- MIL: ON
- SVS light: OFF
- Engine output is restricted.

**5. Symptoms on the vehicle when the DTC is set**

**<Symptoms on the vehicle due to backup control (fail safe function)>**

- Engine output is insufficient.

**<Symptoms on the vehicle due to malfunction>**

- –

**6. Pre-inspection work**

- Check that the battery voltage is in the normal range.

**7. After-inspection work**

- Clear all past DTCs.
- Check that no DTC is detected after test drive.

**8. Estimated failure factors**

- Abnormal battery voltage.
- Faulty contact in EGR actuator connector.
- Harness disconnection or short-circuit.

## P14B4: Battery voltage (low) (EGR actuator power supply too low)

INFORMATION

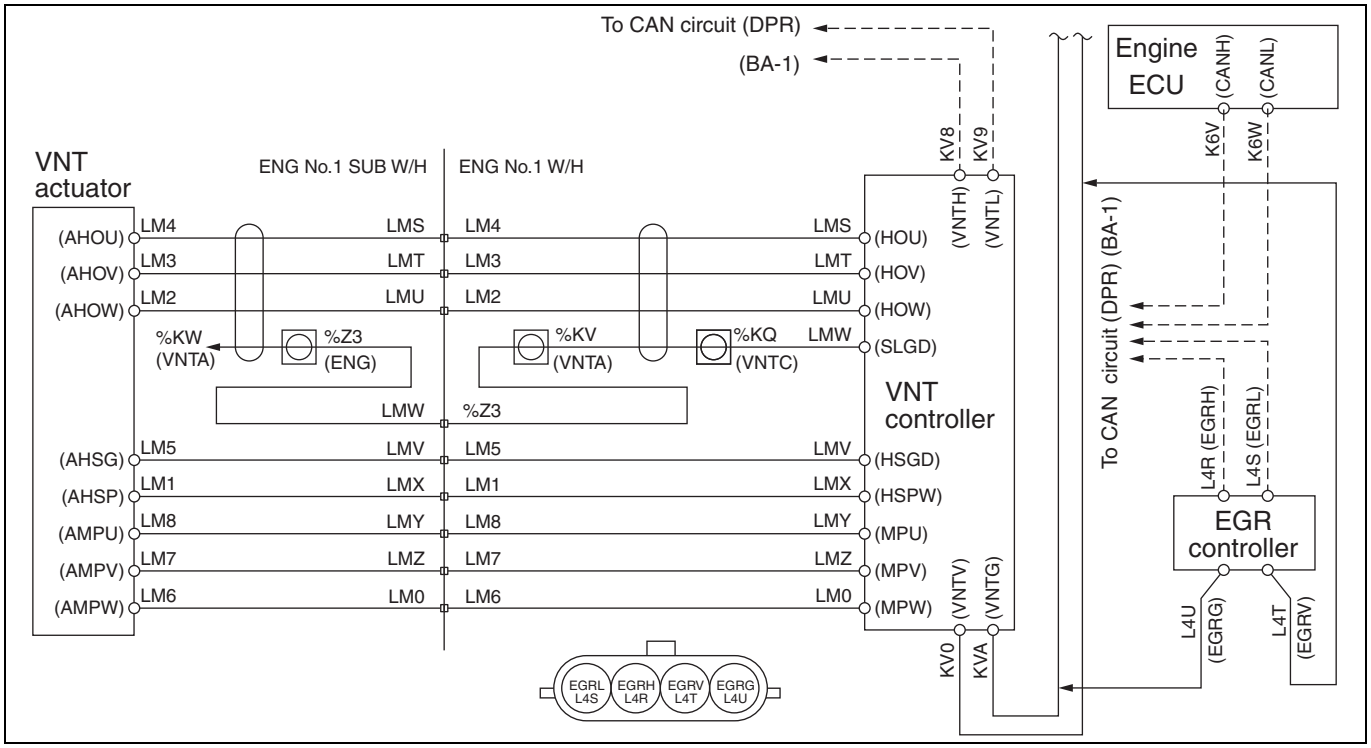


SAPH16F010300696

**1. Technical description**

- EGR valve is a butterfly type.
- EGR valve opening is controlled by engine speed and amount of intake air.
- EGR valve opening is adjusted by engine ECU and CAN communication.
- EGR valve will not operate when engine coolant temperature is low (≤ 40 °C {104 °F})
- Wiping operation from "fully open → fully closed" is conducted as an EGR valve surface cleaning operation when the starter switch is LOCK.

**<Description of malfunction>**

- Failure message is received from EGR controller.

**2. DTC set condition**

(1) DTC detection condition

- Battery voltage is in the range of 8 V to 16 V.
- There is no disconnection in harness connected to EGR valve.
- Starter switch ON. (Not related to engine speed.)

(2) Judgment criteria

- When power supply voltage is 7 V or less, and this condition continues for 60 ms.

**3. Reset condition**

- Immediately after normal operation is restored.

**4. Indication, warning or system control regulation when the DTC is set.**

- MIL: ON
- SVS light: OFF
- Engine output is restricted.

**5. Symptoms on the vehicle when the DTC is set**

**<Symptoms on the vehicle due to backup control (fail safe function)>**

- Engine output is insufficient.

**<Symptoms on the vehicle due to malfunction>**

- –

**6. Pre-inspection work**

- Check that the battery voltage is in the normal range.

**7. After-inspection work**

- Clear all past DTCs.
- Check that no DTC is detected after test drive.

**8. Estimated failure factors**

- Abnormal battery voltage.
- Faulty contact in EGR actuator connector.
- Disconnection or short-circuit in sensor harness.

## INSPECTION PROCEDURE: P14B3 and P14B4

| 1 | Check the DTC detected 1 (Engine ECU) [HINO DX II ] |
|---|---|

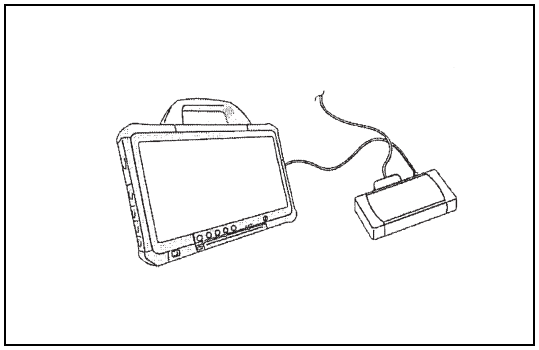

SAPH16F010300697

1. Set the starter switch to the "LOCK" position.
2. Connect the vehicle to HINO DX II .
3. Set the starter switch to the "ON" position.
4. Select [Engine] and check if any DTC other than DTC (P14B3 or P14B4) has been detected.

**Has a DTC other than DTC (P14B3 or P14B4) been detected?**

**YES**

**Go to diagnosis procedure of a related DTC.**

**NO**

**Go to step 2.**

| 2 | Inspect the EGR valve connector |
|---|---|

1. Check the connection of the EGR valve connector (Looseness and poor contact).

**Was any failure found?**

**YES**

**Connect securely, repair if needed.**
**Perform "After-inspection work" of INFORMATION section.**

**NO**

**Go to step 3.**

| 3 | Inspect the EGR valve power supply |
|---|---|

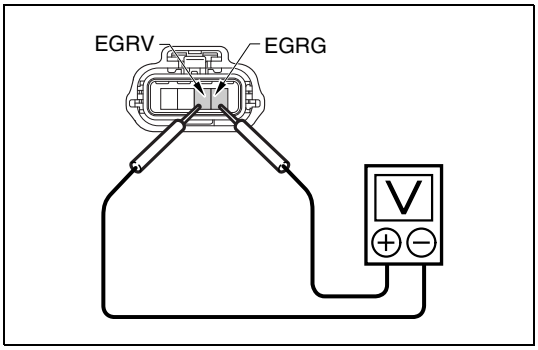


SAPH16F010300698

1. Set the starter switch to the "LOCK" position.
2. Disconnect the EGR valve connector.
3. Set the starter switch to the "ON" position.
4. Use the electrical tester to measure the voltage between the terminals of the EGR valve vehicle-side connector.

| Measurement conditions | Tester connections | Standard values |
|---|---|---|
| **Starter switch: ON** | **EGR valve vehicle-side connector EGRV – EGRG** | **8 – 16 V** |

**Do the measurements meet the standard value?**

**YES**

**Replace the EGR valve, and go to step 4.**

**NO**

**Check the wire harness (actuator power supply and ground). Repair or replace parts as needed.**
**Perform "After-inspection work" of INFORMATION section.**

| 4 | Check the DTC detected 2 (Engine ECU) [HINO DX II ] |
|---|---|

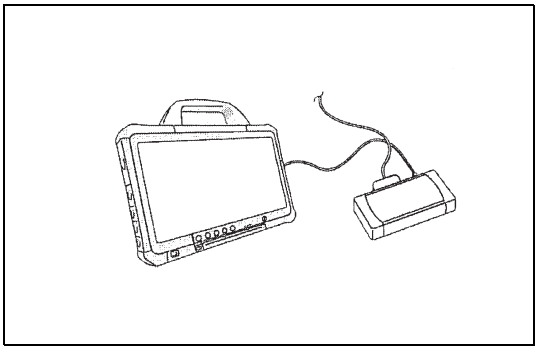

SAPH16F010300699

1. Set the starter switch to the "ON" position.
2. Select [Engine] and check if the DTC (P14B3 or P14B4) has been detected.

**Has DTC (P14B3 or P14B4) been detected?**

**YES**

**Replace the ECU.**
**Perform "After-inspection work" of INFORMATION section.**

**NO**

**Procedure completed.**
**Perform "After-inspection work" of INFORMATION section.**

# DTC: P14B7 and P14B8

EN01H16F01030F03001128

## P14B7: EGR valve controller temperature sensor 1 (Signal too low) (EGR actuator temp. sensor 1 signal too low)

INFORMATION

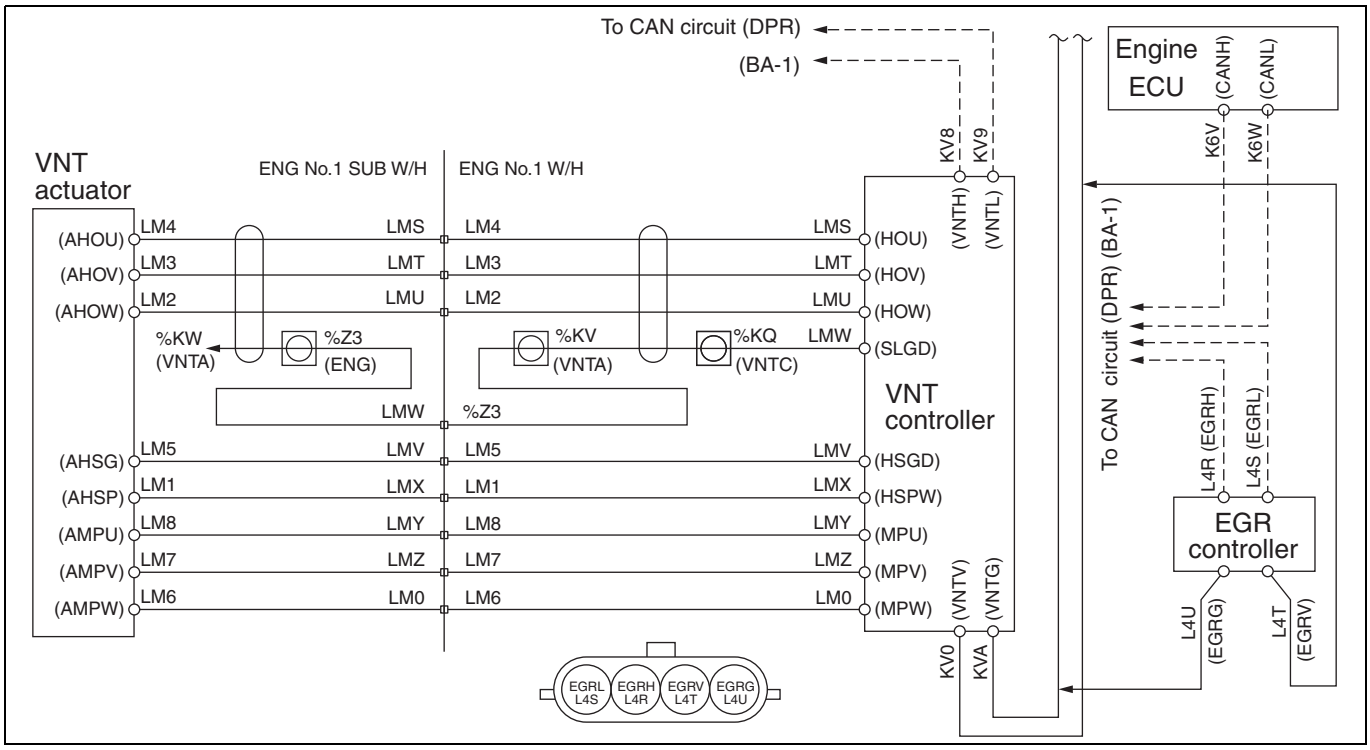


SAPH16F010300700

**1. Technical description**

- EGR valve is a butterfly type.
- EGR valve opening is controlled by engine speed and amount of intake air.
- EGR valve opening is adjusted by engine ECU and CAN communication.
- EGR valve will not operate when engine coolant temperature is low (≤ 40 °C {104 °F})
- DTC is issued when failure message is received from EGR actuator unit.

**<Description of malfunction>**

- EGR actuator system is malfunctioning.

**2. DTC set condition**

(1) DTC detection condition

- Battery voltage is in the range of 8 V to 16 V.
- There is no disconnection in harness connected to EGR valve.
- Starter switch ON. (Not related to engine speed.)

(2) Judgment criteria

- When temperature of temperature sensor 1 (FET side) inside actuator is -50 °C {-58 °F} or less, and this condition continues for 1 second.

**3. Reset condition**

- Normal operation is restored and accelerator is not being operated.

**4. Indication, warning or system control regulation when the DTC is set.**

- MIL: ON
- SVS light: OFF
- Engine output is restricted.

**5. Symptoms on the vehicle when the DTC is set**

**<Symptoms on the vehicle due to backup control (fail safe function)>**

- Engine output is insufficient.

**<Symptoms on the vehicle due to malfunction>**

- –

**6. Pre-inspection work**

- Check that the battery voltage is in the normal range.

**7. After-inspection work**

- Clear all past DTCs.
- Check that no DTC is detected after test drive.

**8. Estimated failure factors**

- Damaged element inside EGR valve actuator

## P14B8: EGR valve controller temperature sensor 1 (Signal too high) (EGR actuator temp. sensor 1 signal too high)

INFORMATION

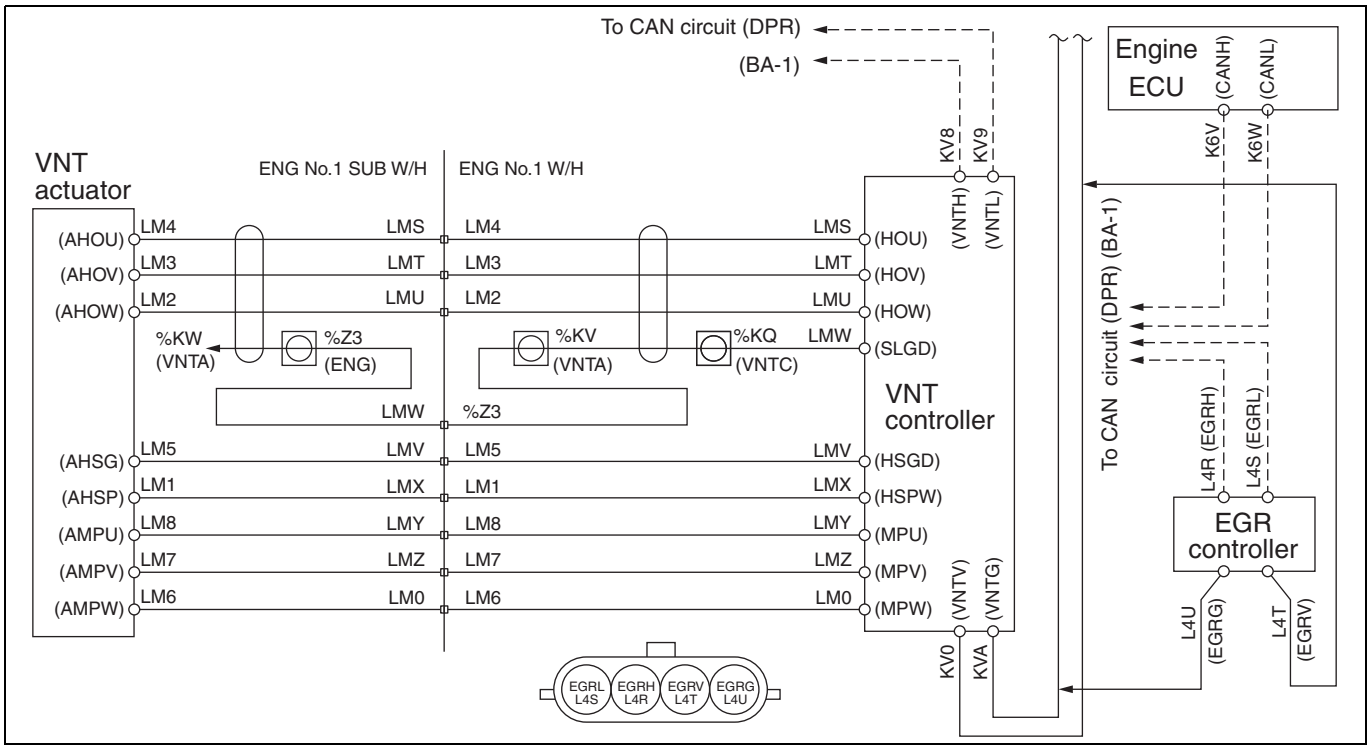


SAPH16F010300701

**1. Technical description**

- EGR valve is a butterfly type.
- EGR valve opening is controlled by engine speed and amount of intake air.
- EGR valve opening is adjusted by engine ECU and CAN communication.
- EGR valve will not operate when engine coolant temperature is low (≤ 40 °C {104 °F})
- DTC is issued when failure message is received from EGR actuator unit.

**<Description of malfunction>**

- EGR actuator system is malfunctioning.

**2. DTC set condition**

(1) DTC detection condition

- Battery voltage is in the range of 8 V to 16 V.
- There is no disconnection in harness connected to EGR valve.
- Starter switch ON. (Not related to engine speed.)

(2) Judgment criteria

- When temperature of temperature sensor 1 (FET side) inside actuator is at least 200 °C {392 °F}, and this condition continues for 1 second.

**3. Reset condition**

- Normal operation is restored and accelerator is not being operated.

**4. Indication, warning or system control regulation when the DTC is set.**

- MIL: ON
- SVS light: OFF
- Engine output is restricted.

**5. Symptoms on the vehicle when the DTC is set**

**<Symptoms on the vehicle due to backup control (fail safe function)>**

- Engine output is insufficient.

**<Symptoms on the vehicle due to malfunction>**

- –

**6. Pre-inspection work**

- Check that the battery voltage is in the normal range.

**7. After-inspection work**

- Clear all past DTCs.
- Check that no DTC is detected after test drive.

**8. Estimated failure factors**

- Damaged element inside EGR valve actuator

## INSPECTION PROCEDURE: P14B7 and P14B8

| 1 | Check the DTC detected 1 (Engine ECU) [HINO DX II ] |
|---|---|

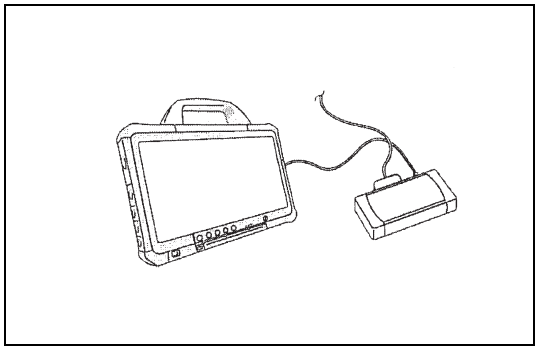

SAPH16F010300702

1. Set the starter switch to the "LOCK" position.
2. Connect the vehicle to HINO DX II .
3. Set the starter switch to the "ON" position.
4. Select [Engine] and check if any DTC other than DTC (P14B7 or P14B8) has been detected.

**Has a DTC other than DTC (P14B7 or P14B8) been detected?**

**YES**

**Go to the diagnostic procedure of a related DTC.**

**NO**

**Go to step 2.**

| 2 | Inspect the EGR valve connector |
|---|---|

1. Check the connection of the EGR valve connector (Looseness and poor contact).

**Was any failure found?**

**YES**

**Connect securely, repair if needed.**
**Perform "After-inspection work" of INFORMATION section.**

**NO**

**Go to step 3.**

## 3 Check the EGR valve power supply

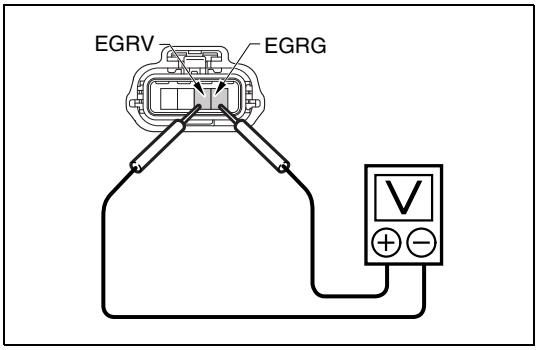


SAPH16F010300703

1. Set the starter switch to the "LOCK" position.
2. Disconnect the EGR valve connector.
3. Set the starter switch to the "ON" position.
4. Use the electrical tester to measure the voltage between the terminals of the EGR valve vehicle-side connector.

| Measurement conditions | Tester connections | Standard values |
|---|---|---|
| **Starter switch: ON** | **EGR valve vehicle-side connector EGRV – EGRG** | **8 – 16 V** |

**Do the measurements meet the standard value?**

**YES**

**Replace the EGR valve, go to step 4.**

**NO**

**Check the wire harness (actuator power supply and ground) and battery voltage. Repair or replace parts as needed.**
**Perform "After-inspection work" of INFORMATION section.**

## 4 Check the DTC detected 2 (Engine ECU) [HINO DX II ]

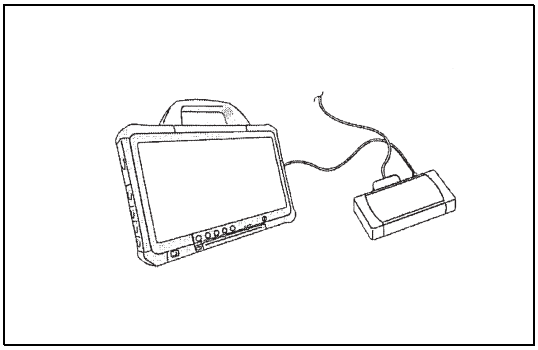

SAPH16F010300704

1. Set the starter switch to the "ON" position.
2. Select [Engine] and check if the DTC (P14B7 or P14B8) has been detected.

**Has DTC (P14B7 or P14B8) been detected?**

**YES**

**Replace the engine ECU.**
**Perform "After-inspection work" of INFORMATION section.**

**NO**

**Procedure completed.**
**Perform "After-inspection work" of INFORMATION section.**

# DTC: P14BC and P14BD

EN01H16F01030F03001129

## P14BC: EGR valve controller temperature sensor 2 (Signal too low) (EGR actuator temp. sensor 2 signal too low)

INFORMATION

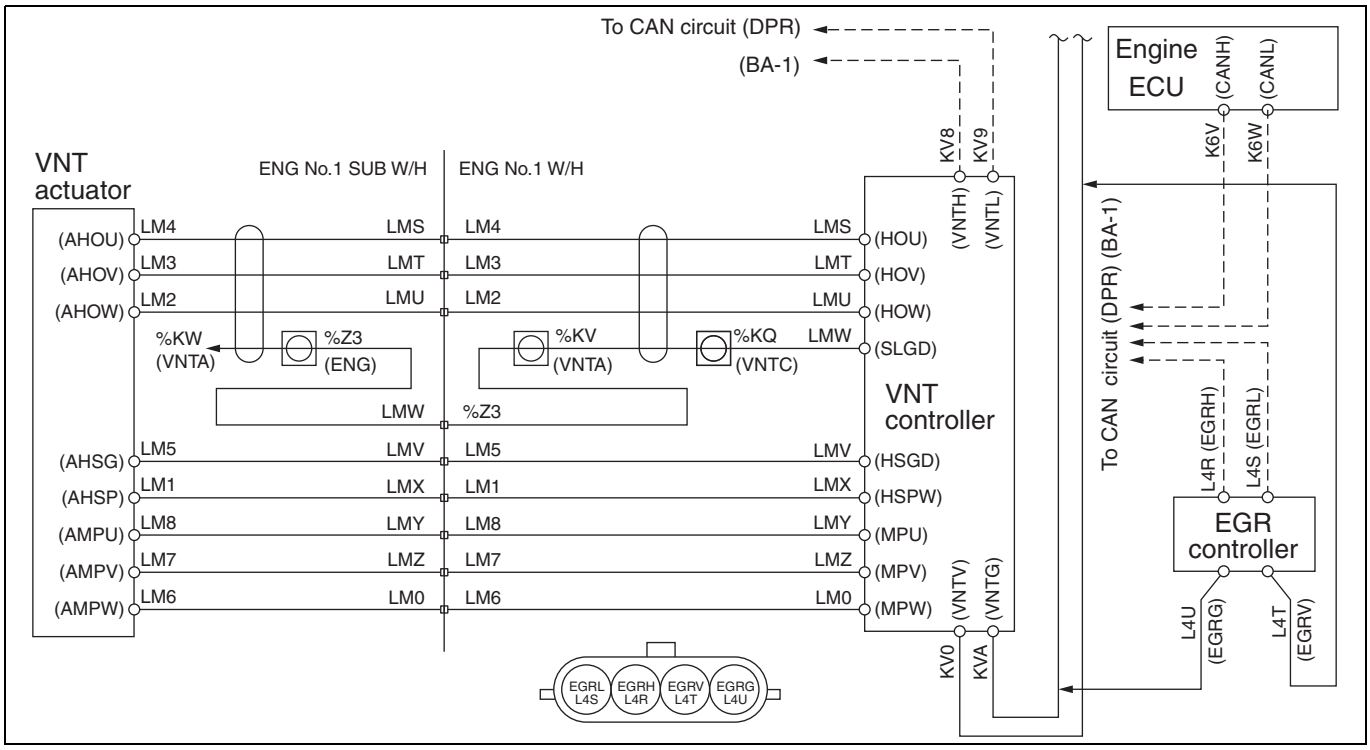


SAPH16F010300705

**1. Technical description**

- EGR valve is a butterfly type.
- EGR valve opening is controlled by engine speed and amount of intake air.
- EGR valve opening is adjusted by engine ECU and CAN communication.
- EGR valve will not operate when engine coolant temperature is low (≤ 40 °C {104 °F})
- DTC is issued when failure message is received from EGR actuator unit.

**<Description of malfunction>**

- EGR actuator system is malfunctioning.

**2. DTC set condition**

(1) DTC detection condition

- Battery voltage is in the range of 8 V to 16 V.
- There is no disconnection in harness connected to EGR valve.
- Starter switch ON. (Not related to engine speed.)

(2) Judgment criteria

- When temperature of temperature sensor 2 (CPU side) inside actuator is -50 °C {-58 °F} or less, and this condition continues for 1 second.

**3. Reset condition**

- Normal operation is restored and accelerator is not being operated.

**4. Indication, warning or system control regulation when the DTC is set.**

- MIL: ON
- SVS light: OFF
- Engine output is restricted.

**5. Symptoms on the vehicle when the DTC is set**

**<Symptoms on the vehicle due to backup control (fail safe function)>**

- Engine output is insufficient.

**<Symptoms on the vehicle due to malfunction>**

- –

**6. Pre-inspection work**

- Check that the battery voltage is in the normal range.

**7. After-inspection work**

- Clear all past DTCs.
- Check that no DTC is detected after test drive.

**8. Estimated failure factors**

- Damaged element inside EGR valve actuator

## P14BD: EGR valve controller temperature sensor 2 (Signal too high) (EGR actuator temp. sensor 2 signal too high)

INFORMATION

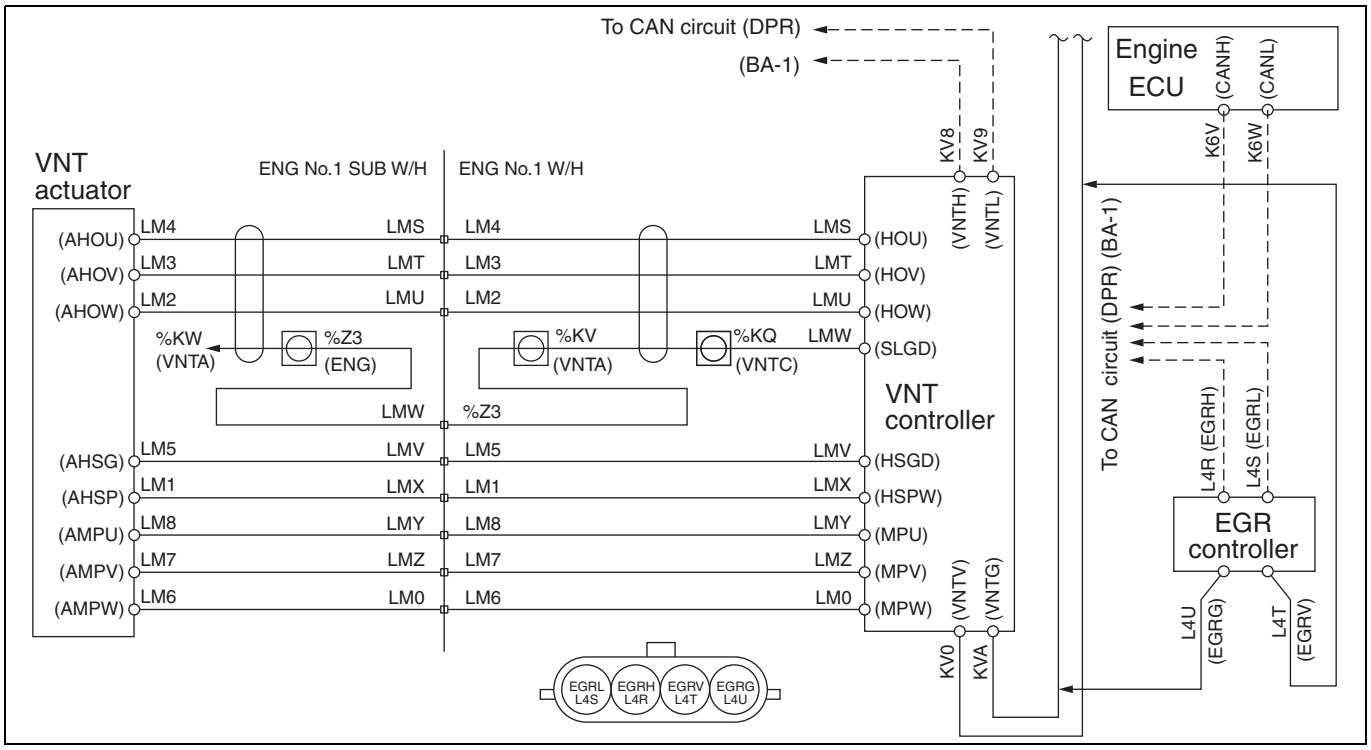


SAPH16F010300706

**1. Technical description**

- EGR valve is a butterfly type.
- EGR valve opening is controlled by engine speed and amount of intake air.
- EGR valve opening is adjusted by engine ECU and CAN communication.
- EGR valve will not operate when engine coolant temperature is low (≤ 40 °C {104 °F})
- DTC is issued when failure message is received from EGR actuator unit.

**<Description of malfunction>**

- EGR actuator system is malfunctioning.

**2. DTC set condition**

(1) DTC detection condition

- Battery voltage is in the range of 8 V to 16 V.
- There is no disconnection in harness connected to EGR valve.
- Starter switch ON. (Not related to engine speed.)

(2) Judgment criteria

- When temperature of temperature sensor 2 (CPU side) inside actuator is at least 200 °C {392 °F}, and this condition continues for 1 second.

**3. Reset condition**

- Normal operation is restored and accelerator is not being operated.

**4. Indication, warning or system control regulation when the DTC is set.**

- MIL: ON
- SVS light: OFF
- Engine output is restricted.

**5. Symptoms on the vehicle when the DTC is set**

**<Symptoms on the vehicle due to backup control (fail safe function)>**

- Engine output is insufficient.

**<Symptoms on the vehicle due to malfunction>**

- –

**6. Pre-inspection work**

- Check that the battery voltage is in the normal range.

**7. After-inspection work**

- Clear all past DTCs.
- Check that no DTC is detected after test drive.

**8. Estimated failure factors**

- Damaged element inside EGR valve actuator

## INSPECTION PROCEDURE: P14BC and P14BD

| 1 | Check the DTC detected 1 (Engine ECU) [HINO DX II ] |
|---|---|

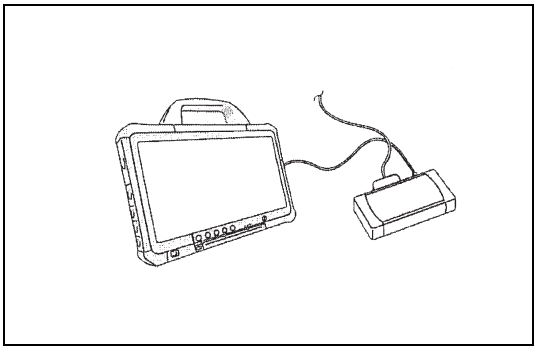

SAPH16F010300707

1. Set the starter switch to the "LOCK" position.
2. Connect the vehicle to HINO DX II .
3. Set the starter switch to the "ON" position.
4. Select [Engine] and check if any DTC other than DTC (P14BC or P14BD) has been detected.

**Has a DTC other than DTC (P14BC or P14BD) been detected?**

**YES**

**Go to the diagnostic procedure of a related DTC.**

**NO**

**Go to step 2.**

| 2 | Inspect the EGR valve connector |
|---|---|

1. Check the connection of the EGR valve connector (Looseness and poor contact).

**Was any failure found?**

**YES**

**Connect securely, repair if needed.**
**Perform "After-inspection work" of INFORMATION section.**

**NO**

**Go to step 3.**

| 3 | Inspect the EGR valve power supply |
|---|---|

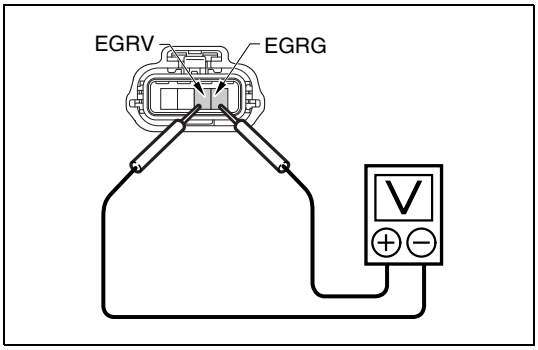


SAPH16F010300708

1. Set the starter switch to the "LOCK" position.
2. Disconnect the EGR valve connector.
3. Set the starter switch to the "ON" position.
4. Use the electrical tester to measure the voltage between the terminals of the EGR valve vehicle-side connector.

| Measurement conditions | Tester connections | Standard values |
|---|---|---|
| **Starter switch: ON** | **EGR valve vehicle-side connector EGRV – EGRG** | **8 – 16 V** |

**Do the measurements meet the standard value?**

**YES**

**Replace the EGR valve, go to step 4.**

**NO**

**Check the wire harness (actuator power supply and ground) and battery voltage. Repair or replace parts as needed.**
**Perform "After-inspection work" of INFORMATION section.**

| 4 | Check the DTC detected 2 (Engine ECU) [HINO DX II ] |
|---|---|

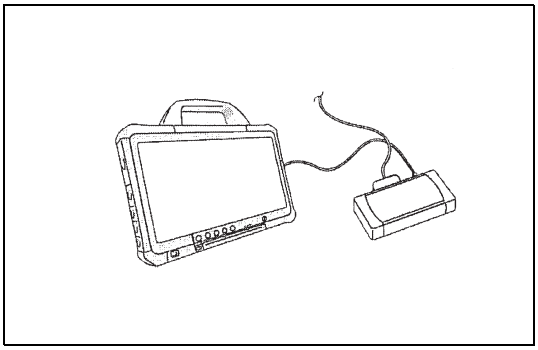

SAPH16F010300709

1. Set the starter switch to the "ON" position.
2. Select [Engine] and check if the DTC (P14BC or P14BD) has been detected.

**Has DTC (P14BC or P14BD) been detected?**

**YES**

**Replace the engine ECU.**
**Perform "After-inspection work" of INFORMATION section.**

**NO**

**Procedure completed.**
**Perform "After-inspection work" of INFORMATION section.**

# DTC: P14BF

EN01H16F01030F03001130

## P14BF: EGR valve controller temperature sensor 1, 2 - rationality (EGR actuator temp. sensor 1 performance invalid)

INFORMATION

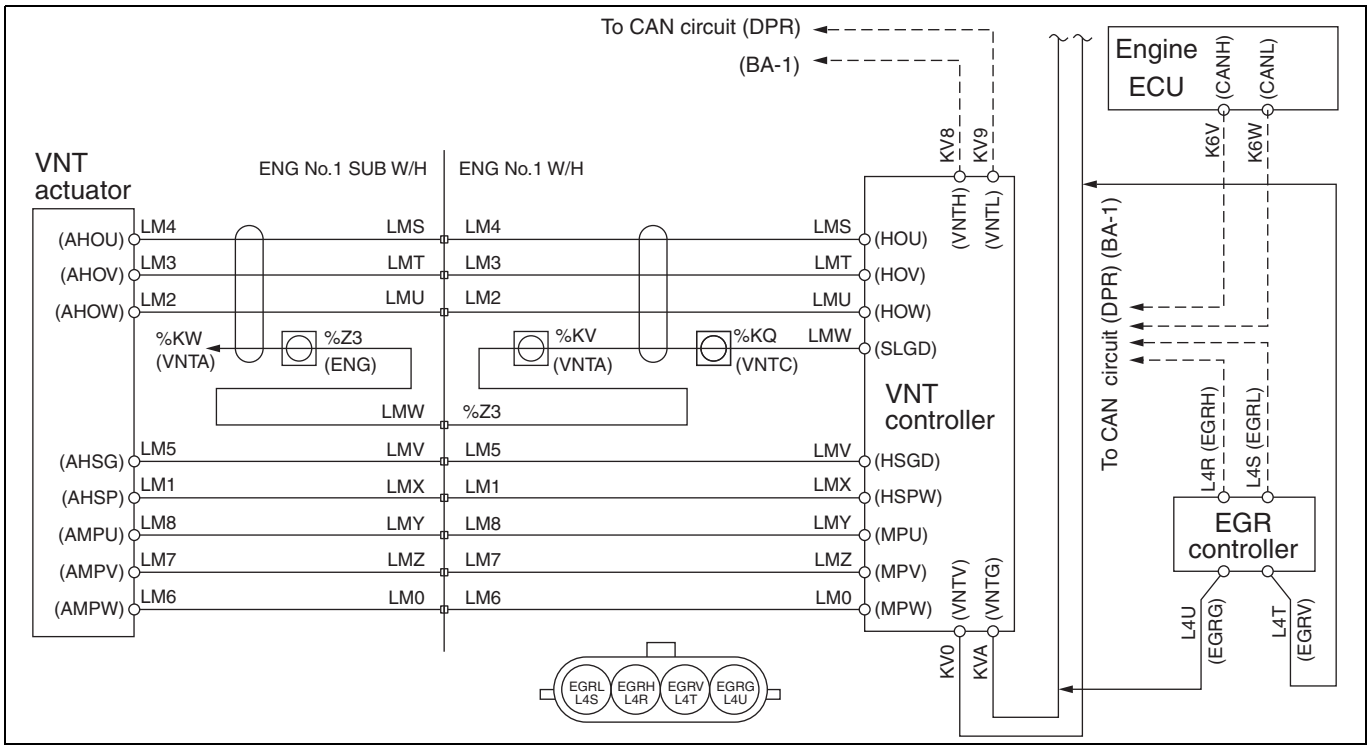


SAPH16F010300710

### 1. Technical description

- EGR valve is a butterfly type.
- EGR valve opening is controlled by engine speed and amount of intake air.
- EGR valve opening is adjusted by engine ECU and CAN communication.
- EGR valve will not operate when engine coolant temperature is low (≤ 40 °C {104 °F})
- Wiping operation from "fully open → fully closed" is conducted as an EGR valve surface cleaning operation when the starter switch is LOCK.

**<Description of malfunction>**

- Failure message is received from EGR controller.

### 2. DTC set condition

(1) DTC detection condition

- Battery voltage is in the range of 8 V to 16 V.
- There is no disconnection in harness connected to EGR valve.
- Starter switch ON. (Not related to engine speed.)
- EGR motor drive duty is 3 % or less.

(2) Judgment criteria

- When temperature of temperature sensor 1 inside actuator is between -20 °C {-4 °F} and 170 °C {338 °F}, and difference between temperature sensors 1 and 2 is at least 30 °C {86 °F}, this condition continues for 1 second.

### 3. Reset condition

- Immediately after normal operation is restored.

**4. Indication, warning or system control regulation when the DTC is set.**

- MIL: ON
- SVS light: OFF
- Engine output is restricted.

**5. Symptoms on the vehicle when the DTC is set**

**<Symptoms on the vehicle due to backup control (fail safe function)>**

- Engine output is insufficient.

**<Symptoms on the vehicle due to malfunction>**

- –

**6. Pre-inspection work**

- Check that the battery voltage is in the normal range.

**7. After-inspection work**

- Clear all past DTCs.
- Check that no DTC is detected after test drive.

**8. Estimated failure factors**

- Damaged element inside EGR valve actuator
- Soot adhesion to EGR valve sealing face and gas passageway, and motor abnormal heat rise due to damage caused by hard foreign substances (Hardened carbon may peel off from EGR cooler upstream of EGR valve.)
  *1. If there is no problem with the above, foreign substance damage occurred when the MIL was ON, but at present the foreign substances are thought to have dropped off and normal operation restored.
  *2. This DTC may be detected because there is freezing inside the EGR valve when the outside temperature is low. When the interior thaws, however, normal operation will be restored.

## INSPECTION PROCEDURE: P14BF

| 1 | Check the DTC detected (Engine ECU) [HINO DX II ] |
|---|---|

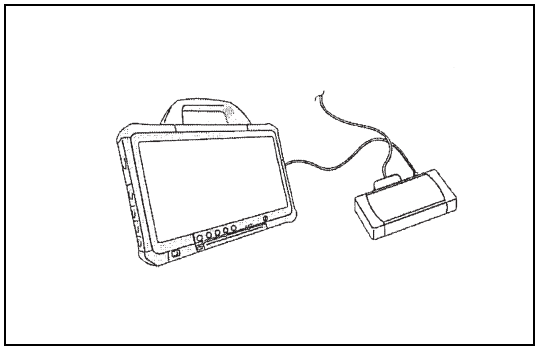

SAPH16F010300711

1. Set the starter switch to the "LOCK" position.
2. Connect the vehicle to HINO DX II .
3. Set the starter switch to the "ON" position.
4. Select [Engine] and check if any DTC other than P14BF has been detected.

**Has a DTC other than P14BF been detected?**

**YES**

**Go to the diagnostic procedure of a related DTC.**

**NO**

**Go to step 2.**

| 2 | Inspect the EGR valve |
|---|---|

1. Check the valve sealing face and gas passageway for soot buildup or damage due to foreign substances.
2. Check if there is soot obstructing the exhaust gas passageway inlet or outlet.

**Was any failure found?**

**YES**

**Removing foreign matter and clean.**
**If damaged, replace the EGR valve.**
**Perform "After-inspection work" of INFORMATION section.**

**NO**

**Go to step 3.**

| 3 | Inspect the EGR valve connector |
|---|---|

1. Check the connection of the EGR valve connector (Looseness and poor contact).

**Was any failure found?**

**YES**

**Connect securely, repair if needed.**
**Perform "After-inspection work" of INFORMATION section.**

**NO**

**Go to step 4.**

| 4 | Inspect the EGR valve power supply |
|---|---|

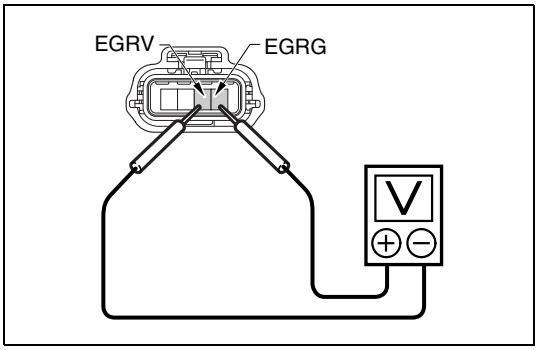


SAPH16F010300712

1. Set the starter switch to the "LOCK" position.
2. Disconnect the EGR valve connector.
3. Set the starter switch to the "ON" position.
4. Use the electrical tester to measure the voltage between the terminals of the EGR valve vehicle-side connector.

| Measurement conditions | Tester connections | Standard values |
|---|---|---|
| Starter switch: ON | EGR valve vehicle-side connector EGRV – EGRG | 8 – 16 V |

**Do the measurements meet the standard value?**

**YES**

**Go to step 5.**

**NO**

**Check the wire harness (actuator power supply and ground) and battery voltage. Repair or replace parts as needed.**
**Perform "After-inspection work" of INFORMATION section.**

| 5 | Check the response delay of the EGR valve [HINO DX II ] |
|---|---|

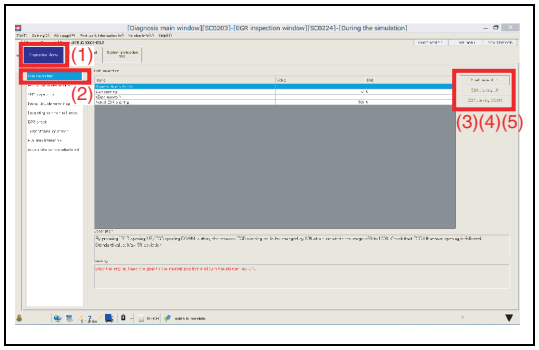


SAPH16F010300713

1. Select [Inspection Menu] and then [EGR inspection] from the menu, then inspect the response delay at the Target EGR position and Actual EGR position.

**⚠ CAUTION**
**Perform the inspection while the engine is stopped to avoid damages.**

<Inspection procedure>
(1) Select [Inspection Menu].
(2) Select [EGR inspection].
(3) Click [Start inspection].
(4) Select [EGR opening UP]:
• Inspect the response delay at each step of the Target EGR position and Actual EGR position from 0 to 100 %.
(5) Select [EGR opening DOWN]:
• Inspect the response delay at each step of the Target EGR position and Actual EGR position from 100 to 0 %.

**HINT**
**The EGR opening position changes of around 10 % per step between 0 – 100 %.**

| Standard values |
|---|
| From the Target EGR position to the Actual EGR position, the response delay should be within 5 seconds. |

**Do the measurements meet the standard value?**

**YES**

**Replace the engine ECU.**
**Perform "After-inspection work" of INFORMATION section.**

**NO**

**Replace the EGR valve.**
**Perform "After-inspection work" of INFORMATION section.**

# DTC: P1515

EN01H16F01030F03001131

## P1515: Charge air undercooling

INFORMATION

**1. Technical description**

- The intercooler cooling efficiency is monitored by comparing the intake temperature and intercooler outlet temperature measured by the air flow sensor.

**<Description of malfunction>**

- Intercooler cooling efficiency drop is detected.

**2. DTC set condition**

(1) DTC detection condition

- Engine speed is at least 1,500 r/min.
- Fuel injection quantity is at least 40 $mm^3$/st. cyl.
- Battery voltage is in the range of 10 V to 16 V.
- Engine speed fluctuation is less than 156 r/min/sec.
- Fuel injection quantity fluctuation is less than 78 $mm^3$/st. cyl.
- Atmospheric pressure is at least 75 kPa {10.8 psi}.
- Vehicle speed is at least 21 km/h {13 mph}.
- Air intake quantity is at least 75 g/sec.
- Intake air temperature sensor (with built-in air flow sensor) is at least -10 °C {14 °F}

The above conditions continue for at least 40 seconds.

(2) Judgment criteria

- The calculated intercooler efficiency, which is derived from the intake temperature sensor, boost pressure sensor, intake air temperature sensor (intercooler outlet), and atmospheric pressure sensor, is below 30 – 50 % (for vehicle speeds 21 and 40 km/h {13 and 25 mph}).
- Difference among the estimated EGR rate calculated from the engine speed and fuel injection rate, the estimated intake manifold temperature calculated from the EGR gas outlet temperature sensor and intake air temperature sensor (intercooler outlet), and the reading of the intake temperature sensor is at least 36 °C {97 °F} (when 0 % ≤ EGR rate < 40 %), at least 75 °C {167 °F} (when 40 % ≤ EGR rate < 60 %) and at least 85 °C {185 °F} (when 60 % ≤ EGR rate).

**3. Reset condition**

- After restoration to normal condition.

**4. Indication, warning or system control regulation when the DTC is set.**

- MIL: ON
- SVS light: OFF

**5. Symptoms on the vehicle when the DTC is set**

**<Symptoms on the vehicle due to backup control (fail safe function)>**

- –

**<Symptoms on the vehicle due to malfunction>**

- –

**6. Pre-inspection work**

- Check that the battery voltage is in the normal range.

**7. After-inspection work**

- Clear all past DTCs.
- Check that no DTC is detected after test drive.

**8. Estimated failure factors**

1. Insufficient cooling air
   - Foreign substance clogging intercooler outer fins
   - Foreign substance clogging radiator outer fins
   - Deformed or clogged intercooler outer fin
   - Deformed or clogged radiator outer fin
   - Foreign substance clogging air inlet at front of vehicle
2. Faulty intercooler
   - Tube abnormal swelling or cracking
3. Faulty part other than intercooler
   - Engine cooling fan failure
   - Fan clutch failure
   - Clogged air cleaner

## INSPECTION PROCEDURE: P1515

| 1 | Check the DTC detected (Engine ECU) [HINO DX II ] |
|---|---|

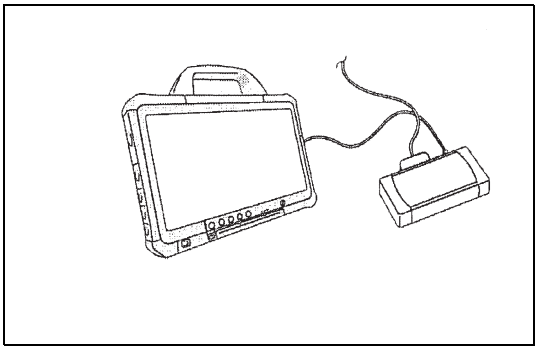

SAPH16F010300714

1. Connect the vehicle to HINO DX II .
2. Set the starter switch to the "ON" position.
3. Select [Engine] and check if any DTC other than P1515 (for example P0096, P0106, P0111, P2227, P0101, P2457) have been detected.

**Has a DTC other than P1515 (for example P0096, P0106, P0111, P2227, P0101, P2457) been detected?**

**YES**

**Go to diagnosis procedure of a related DTC.**

**NO**

**Go to step 2.**

| 2 | Inspect the radiator curtain |
|---|---|

1. Check if the radiator curtain is closed.

**Was any failure found?**

**YES**

**Open the radiator curtain.**
**Perform "After-inspection work" of INFORMATION section.**

**NO**

**Go to step 3.**

| 3 | Inspect the air cleaner element |
|---|---|

1. Check there is no dirt, damage or clogging in the air cleaner element.

**Was any failure found?**

**YES**

**Clean or replace the air cleaner element.**
**Perform "After-inspection work" of INFORMATION section.**

**NO**

**Go to step 4.**

| 4 | Inspect the radiator fan |
|---|---|

1. Check that the radiator fan (fan blades) was damaged

**Was any failure found?**

**YES**

**Replace the radiator fan.**
**Perform "After-inspection work" of INFORMATION section.**

**NO**

**Go to step 5.**

| 5 | Inspect the fan clutch |
|---|---|

1. Check if silicone oil is leaking from the fan clutch.

**Was any failure found?**

**YES**

**Replace the fan clutch.**
**Perform "After-inspection work" of INFORMATION section.**

**NO**

**Go to step 6.**

| 6 | Inspect the intercooler |
|---|---|

1. Check that the intercooler outer fin was clogged or damaged.

**Was any failure found?**

**YES**

**Replace the intercooler.**
**Perform "After-inspection work" of INFORMATION section.**

**NO**

**Go to step 7.**

| 7 | Inspect the intercooler tube |
|---|---|

1. Check if the intercooler tubes are abnormally swollen or cracked.

**Was any failure found?**

**YES**

**Replace the intercooler tube.**
**Perform "After-inspection work" of INFORMATION section.**

**NO**

**Go to step 8.**

| 8 | Inspect the radiator |
|---|---|

1. Check if the radiator outer fins are clogged or damaged.

**Was any failure found?**

**YES**

**Replace the radiator.**
**Perform "After-inspection work" of INFORMATION section.**

**NO**

**Procedure completed.**
**Perform "After-inspection work" of INFORMATION section.**

# DTC: P1530

EN01H16F01030F03001132

## P1530: Engine stop switch malfunction

INFORMATION

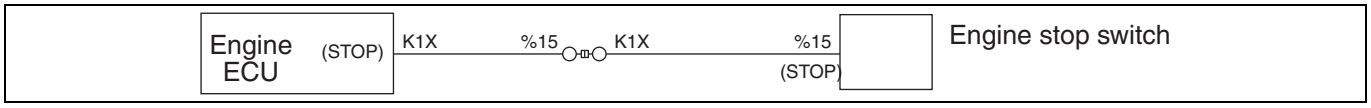


SAPH16F010300715

**1. Technical description**

- Through the engine stop switch, the ECU senses engine stop signals.

**<Description of malfunction>**

- The engine stop switch cannot correctly sense.

**2. DTC set condition**

(1) Check conditions
- Battery voltage is in the range of 10 V to 16 V.

(2) Judgment criteria
- At a vehicle speed of 30 km/h {19 mph}, the stop switch remains in ON position for 1 second or longer.

**3. Reset condition**

- After normal operation is restored and the starter switch is turned LOCK.

**4. Indication, warning or system control regulation when the DTC is set.**

- MIL: OFF
- SVS light: OFF
- Engine stop switch is not available.

**5. Symptoms on the vehicle when the DTC is set**

**<Symptoms on the vehicle due to backup control (fail safe function)>**

- Engine stop switch cannot be used.

**<Symptoms on the vehicle due to malfunction>**

- Engine cannot start.

**6. Pre-inspection work**

- Check that the battery voltage is in the normal range.

**7. After-inspection work**

- Clear all past DTCs.
- Check that no DTC is stored after test drive.

**8. Estimated failure factors**

- Harness disconnection or short-circuit
- Irregular contact (disconnection or poor fit of connector)
- Malfunction of switch (Stuck on ON)
- Malfunction of ECU

## INSPECTION PROCEDURE: P1530

**1 Inspect the engine stop switch**

1. Check the installation of the engine stop switch.

**Was any failure found?**

**YES**

**Install the engine stop switch correctly.**
**Perform "After-inspection work" of INFORMATION section.**

**NO**

**Go to step 2.**

**2 Inspect the engine stop switch connector**

1. Check the connection of the engine stop switch connector (Looseness and poor contact).

**Was any failure found?**

**YES**

**Connect securely, repair if needed.**
**Perform "After-inspection work" of INFORMATION section.**

**NO**

**Go to step 3.**

**3 Inspect the engine stop switch unit**

1. Set the starter switch to the "LOCK" position.
2. Disconnect the engine stop switch connector.
3. Use the electrical tester to perform a unit test of the engine stop switch.

**Was any failure found?**

**YES**

**Replace the engine stop switch.**
**Perform "After-inspection work" of INFORMATION section.**

**NO**

**Go to step 4.**

| 4 | Inspect for power supply short-circuit in the wire harness of the engine stop switch |
|---|---|

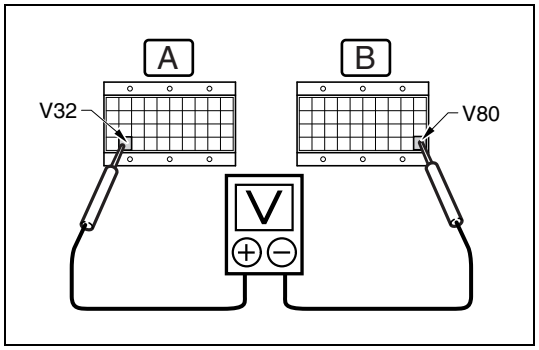


SAPH16F010300716

1. Connect the signal check harness to the engine ECU vehicle-side harness. (Do not connect the harness to the ECU.)
2. Set the starter switch to the "ON" position.
3. Use the electrical tester to measure the voltage between the terminals of the engine ECU (signal check harness).

| Measurement conditions | Tester connections | Standard values |
|---|---|---|
| Starter switch: ON | Engine ECU (signal check harness) STOP(V32) – PGD4(V80) | Less than 1 V |

**Do the measurements meet the standard value?**

**YES**

**Go to step 5.**

**NO**

**Repair or replace the harness.**
**Perform "After-inspection work" of INFORMATION section.**

| 5 | Inspect for disconnection in the wire harness of the engine stop switch |
|---|---|

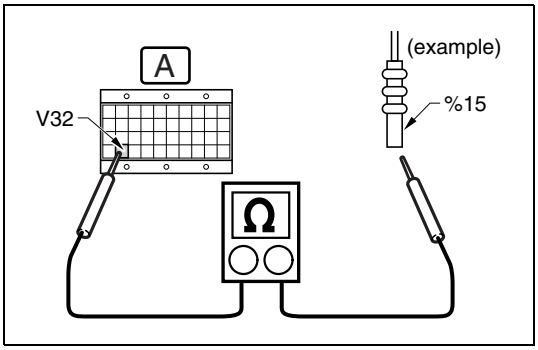


SAPH16F010300717

1. Set the starter switch to the "LOCK" position.
2. Use the electrical tester to measure the resistance between the STOP(V32) terminal in the engine ECU (signal check harness) and the STOP(%15) terminals in the engine stop switch vehicle-side connector.

| Measurement conditions | Tester connections | Standard values |
|---|---|---|
| **Starter switch: LOCK** | **Engine ECU (signal check harness) STOP(V32) – STOP(%15) Engine stop switch vehicle-side connector** | **Less than 1 Ω** |

**Do the measurements meet the standard value?**

**YES**

**Replace the engine ECU.**
**Perform "After-inspection work" of INFORMATION section.**

**NO**

**Repair or replace the harness.**
**Perform "After-inspection work" of INFORMATION section.**

# DTC: P2002

EN01H16F01030F03001133

## P2002: Filtering performance (missing substrate)

INFORMATION

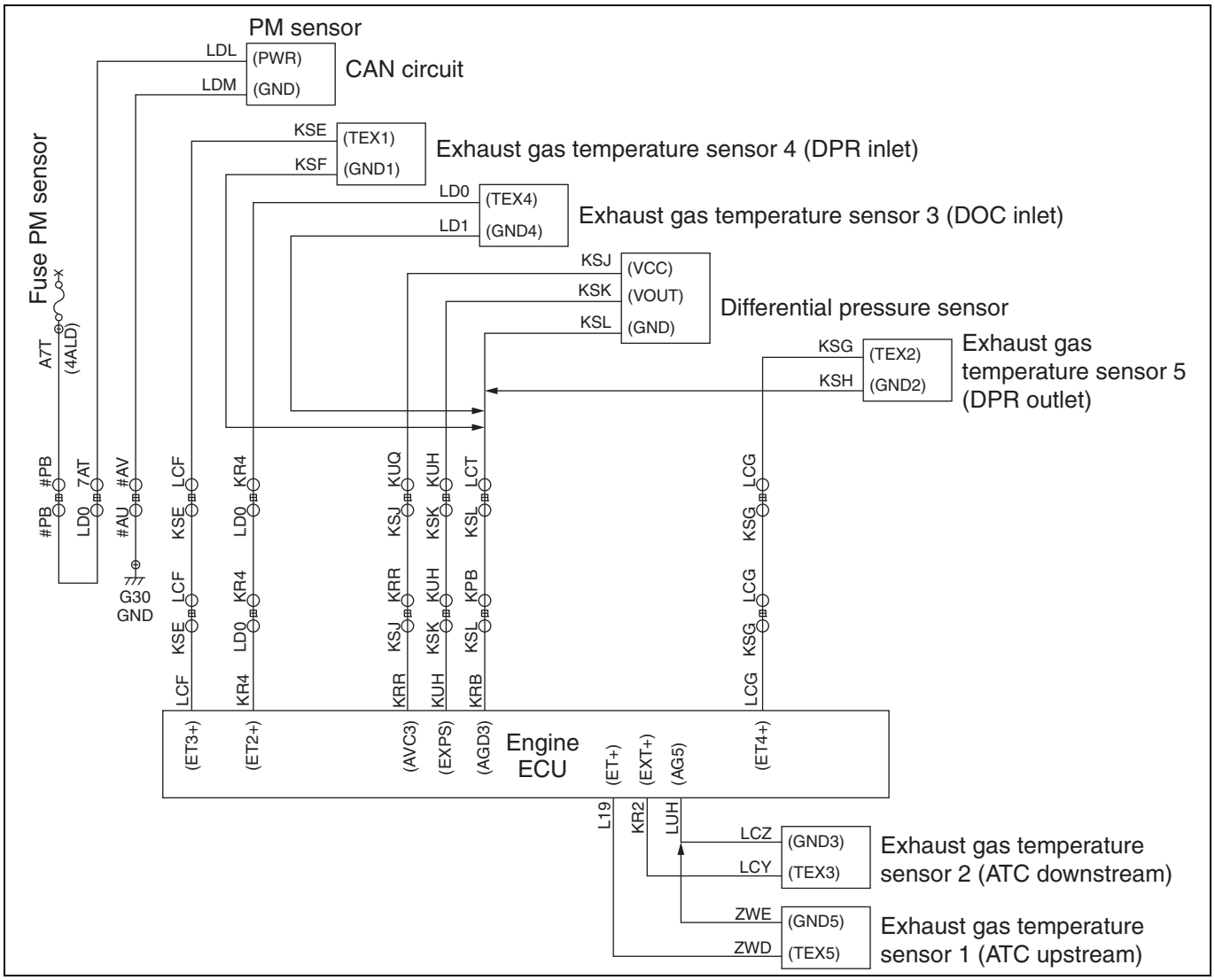


SAPH16F010300718

**1. Technical description**

- Based on the values of the soot emission quantity measured from the PM sensor and the calculated model soot emission quantity, ECU detects clogging and erosion of the DPR.

**<Description of malfunction>**

- Abnormal drop in PM filtering performance in DPR part is detected.

**2. DTC set condition**

(1) DTC detection condition

- PM sensor is active
- After regeneration of PM sensor
- DPR has not been regenerated
- Exhaust gas temperature (SCR outlet): 480 °C {896 °F} or less
- Battery voltage: 11 V – 16 V
- Amount of soot emission: 21 % or more

After above condition is established, while the model calculated soot emission value changes 0 % to 100 %, the time that the below condition is established is half of time or more.

- The engine revolution: 1,500 r/min or more
- The fuel injection quantity: 40 $mm^3$/st or more
- The atmospheric pressure: 75 kPa {10.9 psi} or more
- The engine coolant temperature: 60 °C {140 °F} or more
- The intake air temperature: -20 °C {-4 °F} or more
- PTO is inactive
- The exhaust gas temperature (SCR outlet): 125 °C {257 °F} or less
- The exhaust gas flow speed: 90 m/s {27.4 ft/s} or more

(2) Judgment criteria

- Failure is determined when the value of the calculated soot emission model quantity is 100 % and the value of the measured soot emission quantity is 100 %.

**3. Reset condition**

- Immediately after normal operation is restored.

**4. Indication, warning or system control regulation when the DTC is set.**

- MIL: ON

**5. Symptoms on the vehicle when the DTC is set**

**<Symptoms on the vehicle due to backup control (fail safe function)>**

- –

**<Symptoms on the vehicle due to malfunction>**

- –

**6. Pre-inspection work**

- Check that no abnormality is found by the diagnostic system check.
- Check that the battery voltage is in the normal range.

**7. After-inspection work**

- Clear all past DTCs.
- Check that no DTC is stored after test drive.

**8. Estimated failure factors**

- DPR filter:
  Check for intended filter tampering or damage on the rear end surface.
- Filter damage due to abnormally-high temperature at regeneration due to excessive soot emission.
  Injector: Characteristic abnormality of injection volume
  SCV: Faulty control of common rail pressure
  EGR valve: Faulty control of EGR opening angle
  Diesel throttle valve: Faulty control of diesel throttle valve opening angle

**[Confirmation points for judgment]**

- Fault in the PM sensor:
  - Check for misjudgment of PM emission quantity due to the abnormal of the PM sensor.
- Fault in the soot emission calculated model: Check for the abnormality of below parts.
  - The exhaust gas temperature sensor (SCR inlet)
  - The atmospheric pressure sensor
  - The air flow sensor
  - The ambient air temperature sensor
  - The engine main revolution sensor
  - The injectors

## INSPECTION PROCEDURE: P2002

| 1 | Check the DTC detected (Engine ECU) [HINO DX II ] |
|---|---|

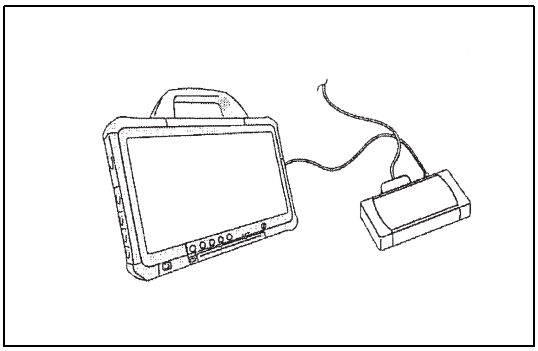

SAPH16F010300719

1. Set the starter switch to the "LOCK" position.
2. Connect the vehicle to HINO DX II .
3. Set the starter switch to the "ON" position.
4. Select [Engine] and check if any DTC other than P2002 has been detected.

**Has a DTC other than P2002 been detected?**

**YES**

**Go to the diagnostic procedure of a related DTC.**
**Perform "After-inspection work" of INFORMATION section.**

**NO**

**Go to step 2.**

| 2 | Inspect the DPR filter |
|---|---|



Damage

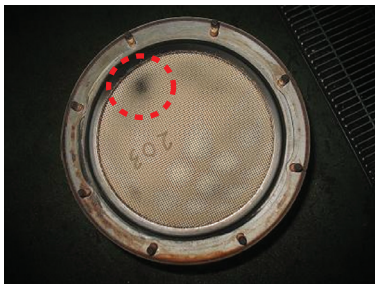

Soot leakage

SAPH16F010300720

1. Remove the DPR filter and check if there is no soot, damages or other abnormalities at its end.

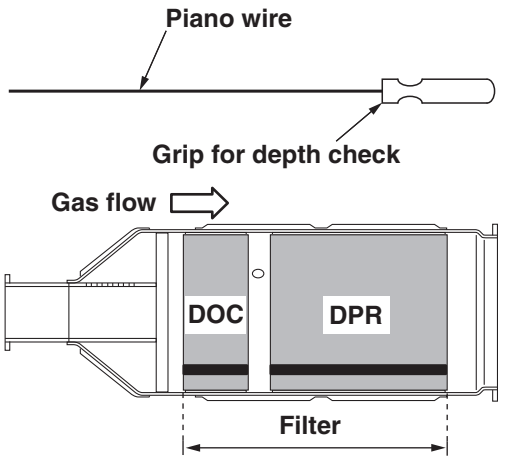


SAPH16F010300721

2. Insert the check probe from the rear surface to inspect the inside.

3. Check probe inserting depth.

| Standard values |
|---|
| 175 - 185 mm {6.890 - 7.283 in.} |

| Was any failure found? |
|---|

YES

**Replace the DPR filter and the PM sensor.**
**Perform "After-inspection work" of INFORMATION section.**
**Go to step 3.**

NO

**Go to step 3.**

| 3 | **Inspect the PM sensor connector** |
|---|---|

1. Check the connection of the PM sensor connector (Looseness and poor contact)

**Was any failure found?**

YES

**Connect securely, repair if needed.**
**Perform "After-inspection work" of INFORMATION section.**

NO

**Go to step 4.**

| 4 | **Inspect the crankshaft position sensor (engine speed main sensor)** |
|---|---|

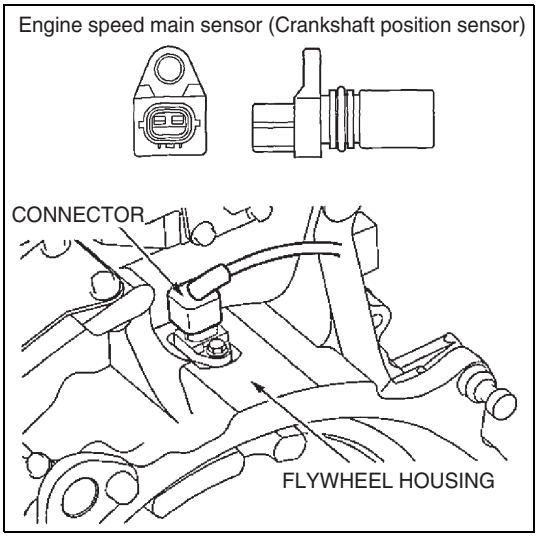


SAPH16F010300722

1. Check the connection of the crankshaft position sensor (engine speed main sensor) connector (Looseness and poor contact).
2. Check the installation of the crankshaft position sensor (engine speed main sensor).

**Was any failure found?**

YES

**Repair or replace the faulty part.**
**Perform "After-inspection work" of INFORMATION section.**
**Go to step 5.**

NO

**Go to step 5.**

| 5 | Inspect the boost pressure sensor |
|---|---|

1. Check the installation of the boost pressure sensor.
2. Make sure there is no dirt, clogging or damage to the sensing unit of the boost pressure sensor.

**Was any failure found?**

**YES**

**If dirt, clogging or damage was found in sensing unit, replace the boost pressure sensor.**
**Perform "After-inspection work" of INFORMATION section.**
**Go to step 6.**

**NO**

**Go to step 6.**

| 6 | Check the boost pressure sensor output signal [HINO DX II ] |
|---|---|

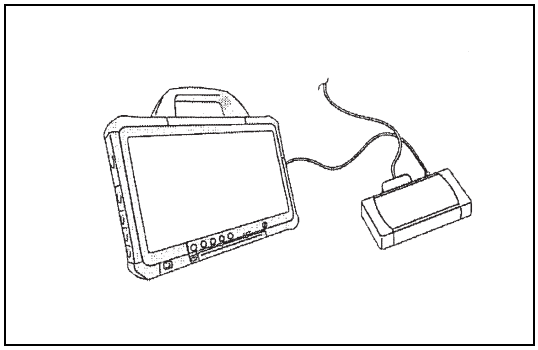

SAPH16F010300723

1. Set the starter switch to the "LOCK" position.
2. Connect the vehicle to HINO DX II .
3. Start the engine.
4. Select [Engine] from the menu.
5. Select [Actual boost pressure] from the [Data monitor Setting] menu.
6. Race the engine from idle to NMR and verify that the boost pressure output signal varies.

| Standard values |
|---|
| **There is no abnormal change in the sensor output signal. (The pressure sensor signal response changes according to the engine speed)** |

**Was there no abnormal change in the sensor output signal?**

**YES**

**Go to step 7.**

**NO**

**Replace the boost pressure sensor.**
**Perform "After-inspection work" of INFORMATION section.**
**Go to step 7.**

| 7 | Inspect the engine coolant temperature sensor |
|---|---|

1. Check the installation of the engine coolant temperature sensor.
2. Make sure there is no dirt, clogging or damage to the engine coolant temperature sensor.

**Was any failure found?**

**YES**

**Clean the engine coolant temperature sensor and install it properly.**
**If damaged, replace the engine coolant temperature sensor.**
**Perform "After-inspection work" of INFORMATION section.**
**Go to step 8.**

**NO**

**Go to step 8.**

| 8 | Check the engine coolant temperature sensor output signal [HINO DX II ] |
|---|---|

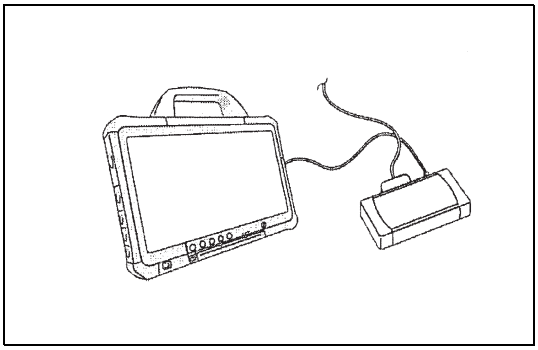

SAPH16F010300724

1. Set the starter switch to the "LOCK" position.
2. Connect the vehicle to HINO DX II .
3. Start the engine.
4. Select [Engine] from the menu.
5. Select [Engine coolant temperature] from the [Data monitor Setting] menu.
6. Verify that the engine coolant temperature output value is 50 °C {122 °F} when the actual engine coolant temperature value is 50 °C {122 °F}.

| Standard values |
|---|
| **Engine coolant temperature outlet value: 50 °C {122 °F}** |

**Do the measurements meet the standard value?**

**YES**

**Go to step 9.**

**NO**

**Replace the engine coolant temperature sensor.**
**Perform "After-inspection work" of INFORMATION section.**
**Go to step 9.**

| 9 | Inspect the intake air temperature sensor |
|---|---|

1. Check the installation of the intake air temperature sensor (air flow sensor).
2. Make sure there is no dirt, clogging or damage to the sensing unit of the intake air temperature sensor (air flow sensor).

**Was any failure found?**

**YES**

**Clean the sensing unit of the intake air temperature sensor (air flow sensor) and install it properly.**
**If damaged, replace the sensor.**
**Perform "After-inspection work" of INFORMATION section.**
**Go to step 10.**

**NO**

**Go to step 10.**

| 10 | Inspect the intake air temperature sensor unit |
|---|---|

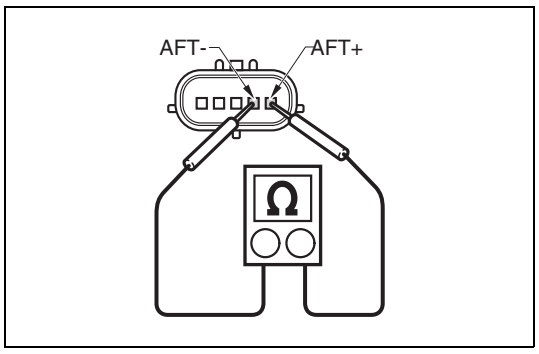

SAPH16F010300725

1. Set the starter switch to the "LOCK" position.
2. Disconnect the intake air temperature sensor (air flow sensor) connector.
3. Using the electrical tester measure the resistance between the terminals of the intake air temperature sensor.

| Measurement conditions | Tester connections | Standard values |
|---|---|---|
| Starter switch: LOCK | intake temperature sensor AFT- – AFT+ | 20 °C {68 °F}: 2.69 – 2.21 kΩ |

**Do the measurements meet the standard value?**

**YES**

**Go to step 11.**

**NO**

**Replace the intake air temperature sensor (air flow sensor).**
**Perform "After-inspection work" of INFORMATION section.**

| 11 | Inspect the exhaust gas temperature sensor (SCR inlet) connector |
|---|---|

1. Check the connection of the exhaust gas temperature sensor (SCR inlet) connector (Looseness and poor contact).

**Was any failure found?**

**YES**

**Connect securely, repair it if needed.**
**Go to step 12.**

**NO**

**Go to step 12.**

| 12 | Inspect the exhaust gas temperature sensor (SCR inlet) |
|---|---|

1. Check the installation of the exhaust gas temperature sensor (SCR inlet).
2. Make sure there is no dirt or damage to the sensing unit of the exhaust gas temperature sensor (SCR inlet).

**Was any failure found?**

**YES**

**Clean the sensing unit of the exhaust gas temperature sensor (SCR inlet) and install it properly. If damaged, replace the exhaust gas temperature sensor (SCR inlet).**
**Go to step 13.**

**NO**

**Go to step 13.**

| 13 | Inspect the exhaust gas temperature sensor (SCR inlet) unit |
|---|---|

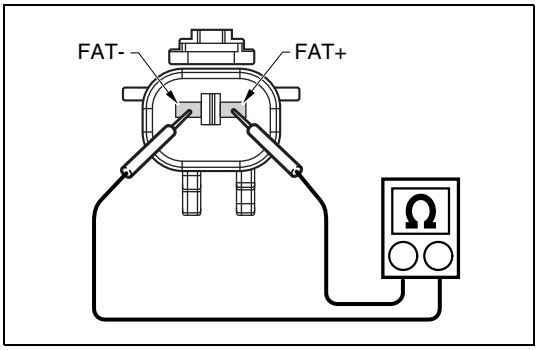


SAPH16F010300726

1. Set the starter switch to the "LOCK" position.
2. Disconnect the exhaust gas temperature sensor (SCR inlet) connector.
3. Use the electrical tester, measure the resistance between the terminals of the exhaust gas temperature sensor (SCR inlet).

| Measurement conditions | Tester connections | Standard values |
|---|---|---|
| **Starter switch: LOCK** | **Exhaust gas temperature sensor (SCR inlet) FAT+ – FAT-** | **20 °C {68 °F}: 220 Ω** |

**Do the measurements meet the standard value?**

YES

**Go to step 14.**

NO

**Replace the exhaust gas temperature sensor (SCR inlet).**
**Go to step 14.**

## 14 Check the response of the EGR valve [HINO DX II ]

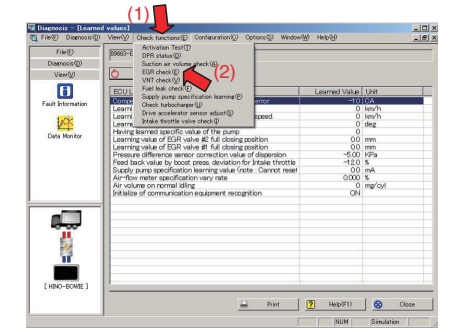


SAPH16F010300727

1. Set the starter switch to the "LOCK" position.
2. Connect the vehicle to HINO DX II .
3. Set the starter switch to the "ON" position.
4. Select [Engine] on the screen of HINO DX II .
5. Select [EGR inspection] from the [Inspection Menu], then inspect the response delay at the Target EGR position and Actual EGR position.

**⚠ CAUTION**
**Perform the inspection while the engine is stopped to avoid engine damages.**

<Inspection procedure>
(1) Select [Inspection Menu].
(2) Select [EGR inspection].
(3) Click [Start inspection].
(4) Click [EGR opening UP]:
• Inspect the response delay at each step of the Target EGR position and Actual EGR position from 0 to 90 %.
(5) Click [EGR opening DOWN]:
• Inspect the response delay at each step of the Target EGR position and Actual EGR position from 90 to 0 %.

**HINT**
**The EGR opening position changes of 10 % per step between 0 – 90 %.**

| Standard values |
|---|
| **From the Target EGR position to the Actual EGR position, the response delay should be within 5 seconds.** |

**Are the measurements within standard value?**

YES

**Go to step 15.**

NO

**Replace the EGR valve.**
**Perform "After-inspection work" of INFORMATION section.**
**Go to step 15.**

| 15 | Check the response delay of the VNT controller [HINO DX II ] |
|---|---|

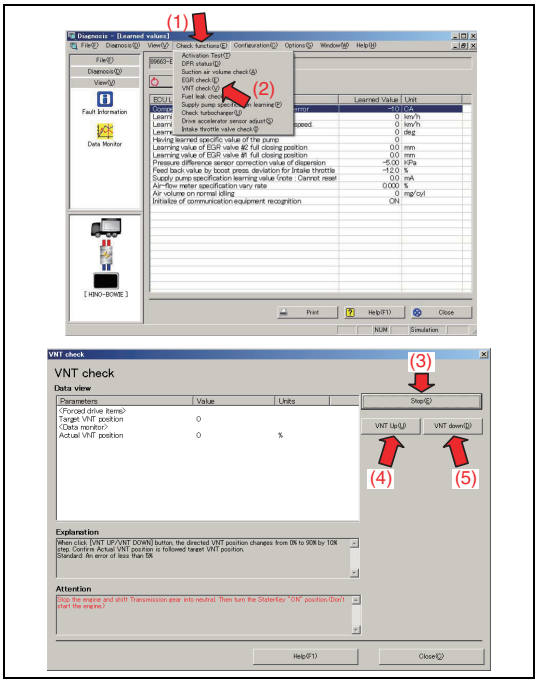


SAPH16F010300728

1. Select [VNT inspection] from the menu, and inspect the response delay at the Target VNT position and Actual VNT position.

**⚠ CAUTION**
**Perform the inspection while the engine is stopped to avoid engine damages.**

<Inspection procedure>
(1) Select [Inspection Menu].
(2) Select [VNT inspection].
(3) Click [Start inspection].
(4) Click [VNT UP].
• Inspect the response delay at each step of the Target VNT position and Actual VNT position from 0 to 90 %.
(5) Click [VNT DOWN].
• Inspect the response delay at each step of the Target VNT position and Actual VNT position from 90 to 0 %.

**HINT**
**The VNT opening position changes of 10 % per step between 0 – 90 %.**

| Standard values |
|---|
| The response delay should be less than 3 seconds. |

**Do the measurements meet the standard value?**

**YES**

**Go to step 16.**

**NO**

**Replace the turbocharger.**
**Perform "After-inspection work" of INFORMATION section.**
**Go to step 16.**

| 16 | Inspect the diesel throttle valve |
|---|---|

1. Check if there are no abnormal opening angles or that the valve is not stuck.

**Was any failure found?**

**YES**

**Replace the diesel throttle valve.**
**Perform "After-inspection work" of INFORMATION section.**
**Go to step 17.**

**NO**

**Go to step 17.**

| 17 | Inspect the SCV |
|---|---|

1. Perform the SCV free acceleration test.

- For a detailed procedure, refer to the separate "SCV free acceleration test" in the following pages.

**Was any failure found?**

**YES**

**Repair or replace the faulty part.**
**Perform "After-inspection work" of INFORMATION section.**
**Go to step 18.**

**NO**

**Go to step 18.**

| 18 | Inspect the injector [HINO DX II ] |
|---|---|

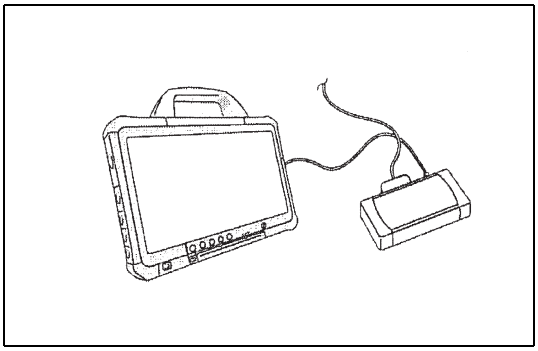

SAPH16F010300729

Check the injection quantity and the rotational fluctuation.

1. Start the engine
2. Select [Injection quantity] from the [Data monitor Setting] menu, and measure the fuel injection quantity.
3. Select [Engine revolution] from the [Data monitor Setting] menu, and measure the rotational fluctuation.

| Measurement conditions |
|---|
| **Engine speed: 1,500 r/min No-load,**<br>**T/M shift lever: Neutral position, A/C off and Air compressor non operating.**<br>**Engine coolant temperature: more than 80 °C {176 °F}** |

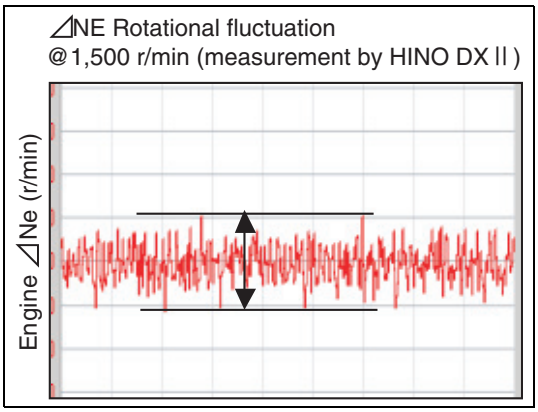


SAPH16F010300730

| Standard values | | |
|---|---|---|
| Type of | Q ($mm^3$/st) | ⊿Ne (r/min) |
| MT | 5.0q ≤ | ≤ 15 |
| Allison® 2200 | 6.0q ≤ | |
| Allison® 2500 | | |
| Allison® 3500 | | |

**Do the measurements meet the standard values?**
**(Do the injection quantity and the rotational fluctuation meet their standard values?)**

**YES**

**Go to step 19.**

**NO**

**Replace the injector.**
**Perform "After-inspection work" of INFORMATION section.**
**Go to step 19.**

| 19 | Check the DTC detected (Engine ECU) [HINO DX ll ] |
|---|---|

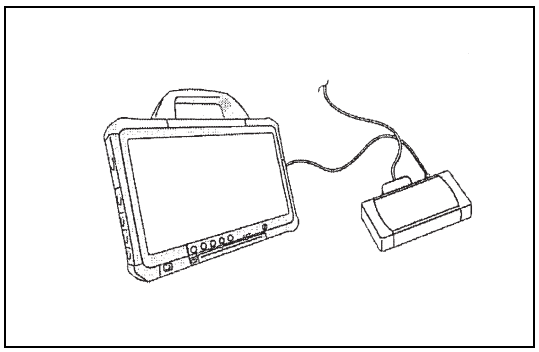

SAPH16F010300732

1. Perform an engine warm-up. (engine coolant temperature: 60 °C {140 °F} or more)
2. Stop the engine.
3. Set the starter switch to the "ON" position.
4. Select [Engine] and check if the DTC P2002 has been detected.

**Has DTC P2002 been detected?**

**YES**

**Replace the engine ECU.**
**Perform "After-inspection work" of INFORMATION section.**

**NO**

**Procedure completed.**
**Perform "After-inspection work" of INFORMATION section.**

## SCV FREE ACCELERATION TEST

| 1 | Test method |
|---|---|

**<Engine speed pattern>**

1. After engine has reached operating temperature (more than 82 °C {179.6 °F}).
2. After air compressor completed building pressure.
3. A/C, Head lights off.
4. All devices off. (PTO, Refrigeration compressor. etc)
5. Control the engine revolution by means of operating Cruise Control system.

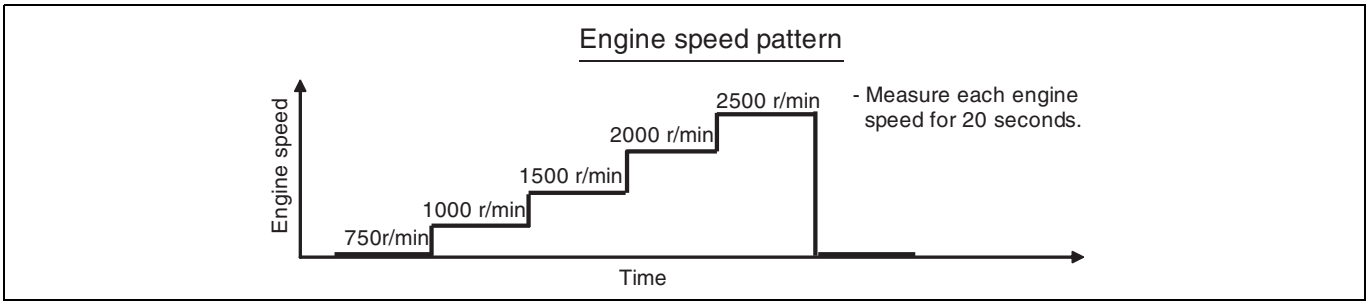


SAPH16F010300733

**<Acceleration pattern>**

1. After engine has reached operating temperature (more than 82 °C {179.6 °F}).
2. After air compressor completed building pressure.
3. A/C, Head lights off.
4. All devices off. (PTO, Refrigeration compressor. etc)
5. Check that actual common rail pressure following target.

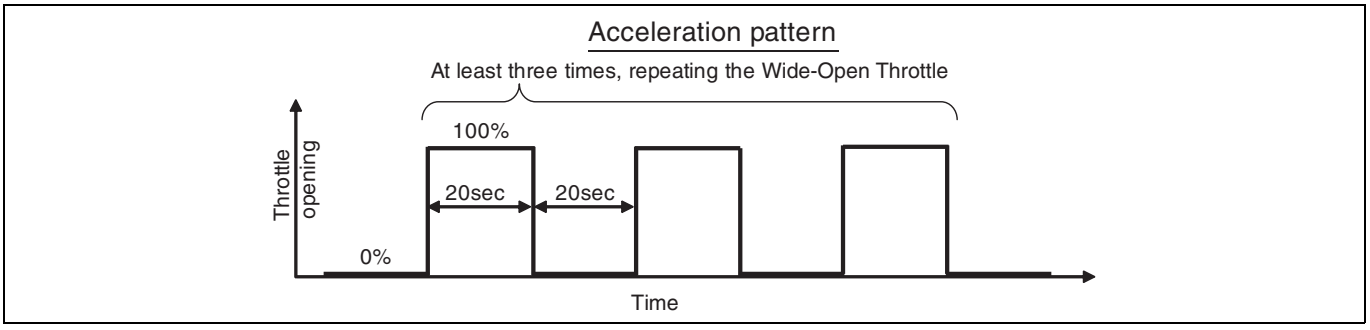


SAPH16F010300734

## 2 Types of HINO DX II data to be measured

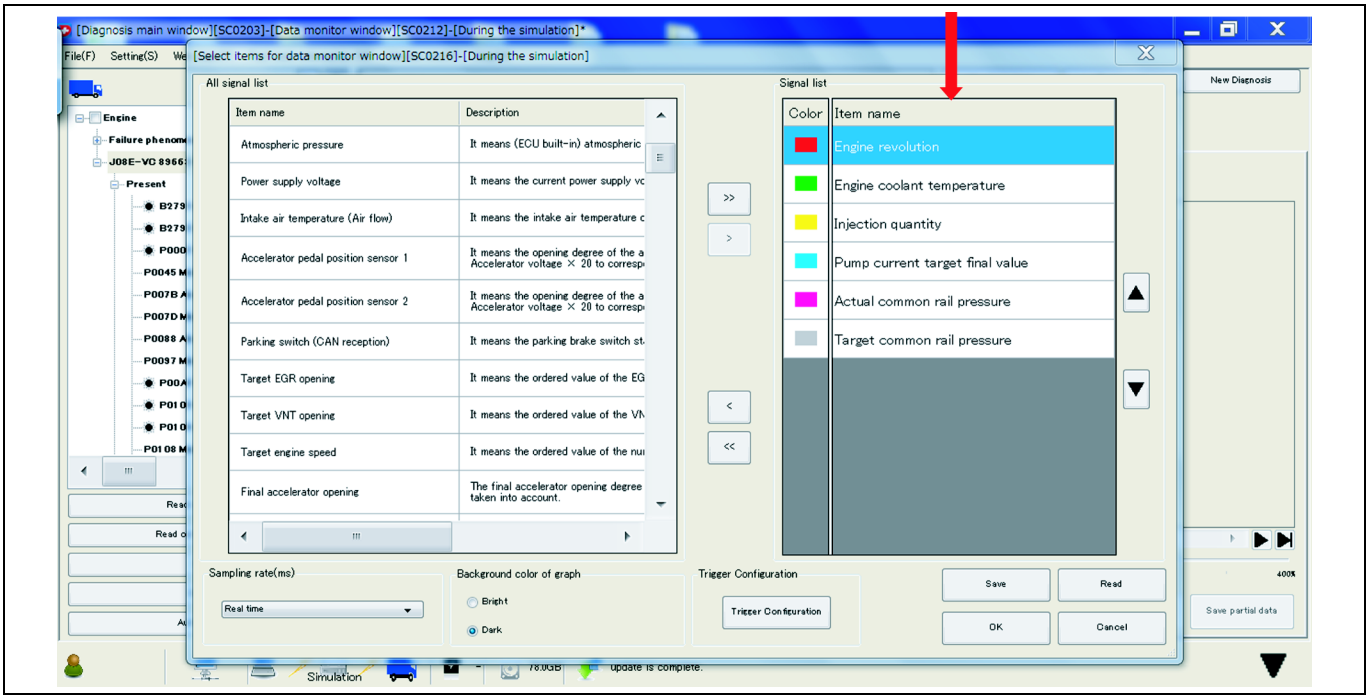


SAPH16F010300735

## 3 If the following symptoms occur, FAIL. If not, OK.

a. Pressure is reduced by 5 MPa or more continually for 5 seconds or more. → Replace the supply pump.

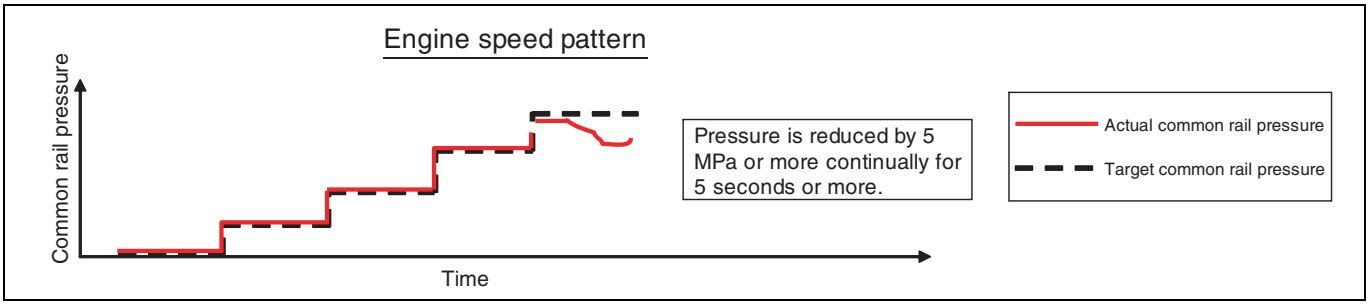


SAPH16F010300736

b. Pressure is increased by 5 MPa or more continually for 5 seconds or more. → Replace the SCV.

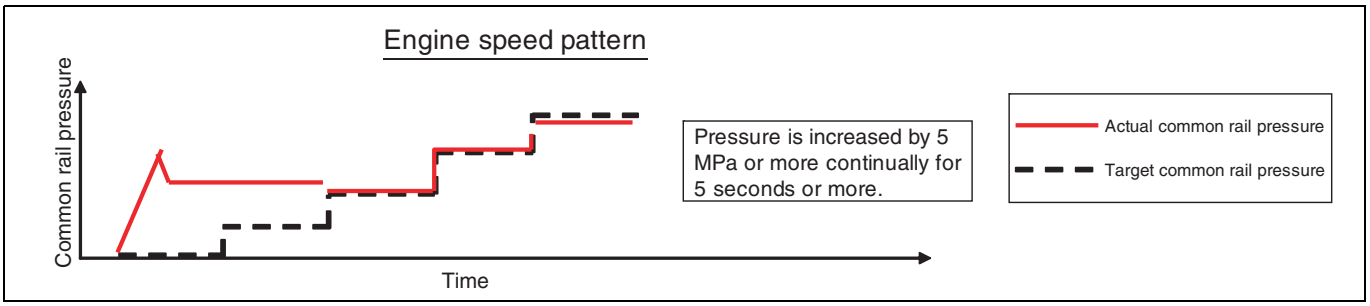


SAPH16F010300737

c. The maximum common rail pressure exceeds 222 MPa for even a moment during pressure increase. → Replace the SCV.

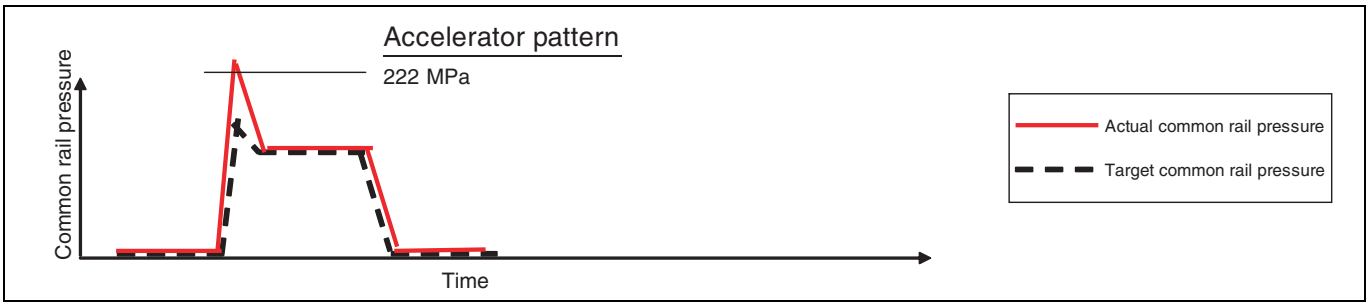


SAPH16F010300738

d. After the maximum common rail pressure exceeds 222 MPa during pressure increase, the actual rail pressure falls below the target rail pressure. → Replace the SCV.

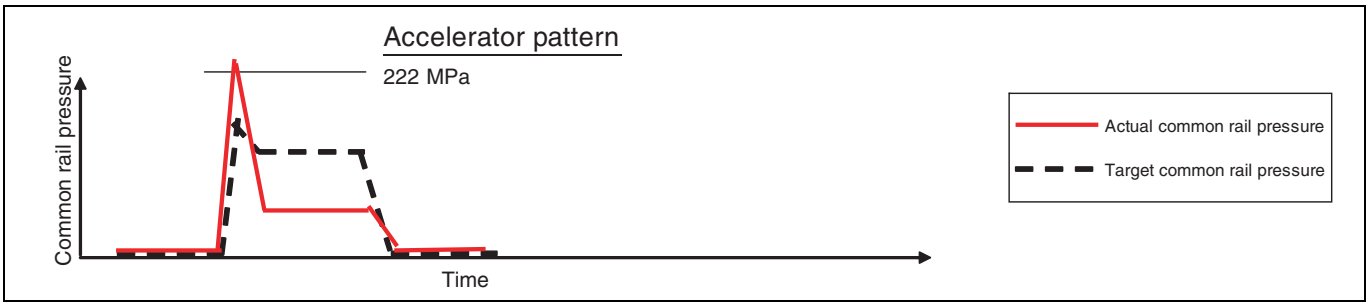


SAPH16F010300739

e. Before the maximum common rail pressure exceeds 222 MPa during pressure increase, the actual rail pressure falls below the target rail pressure rapidly. → Replace the common rail.

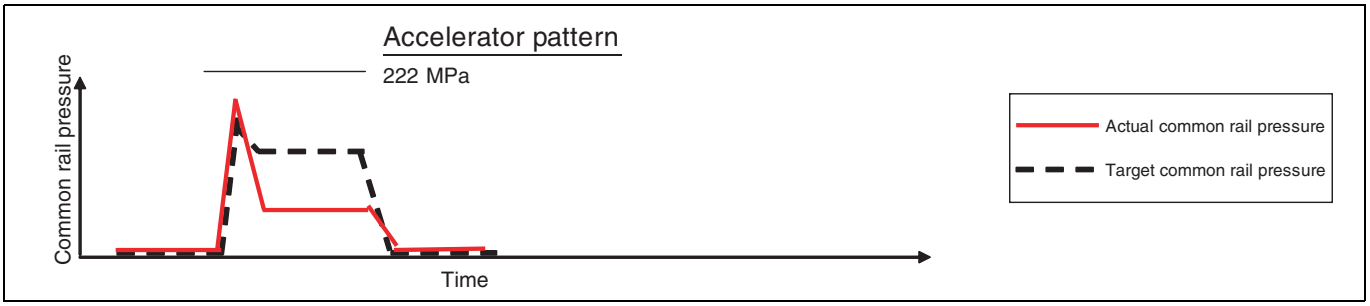


SAPH16F010300740

f. The maximum common rail pressure exceeds 222 MPa during pressure drop. → Check the return pipe.

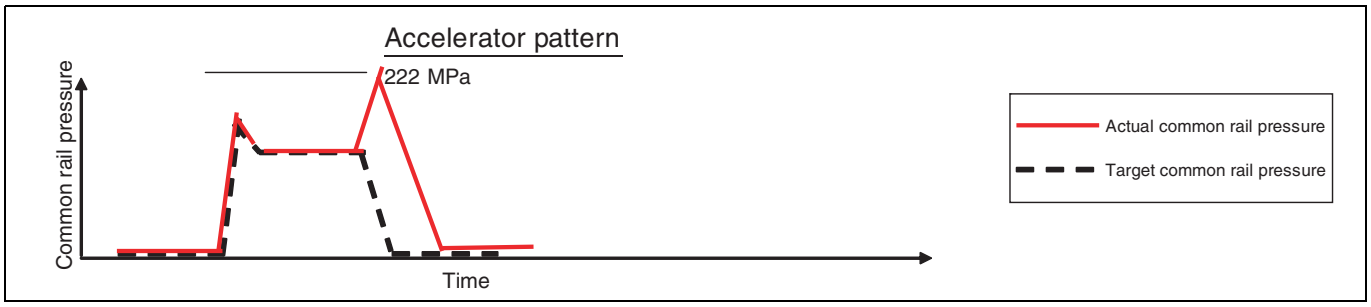


SAPH16F010300741

g. The pressure is disturbed at a given speed and the pressure decreases at higher speed. → Replace the supply pump.

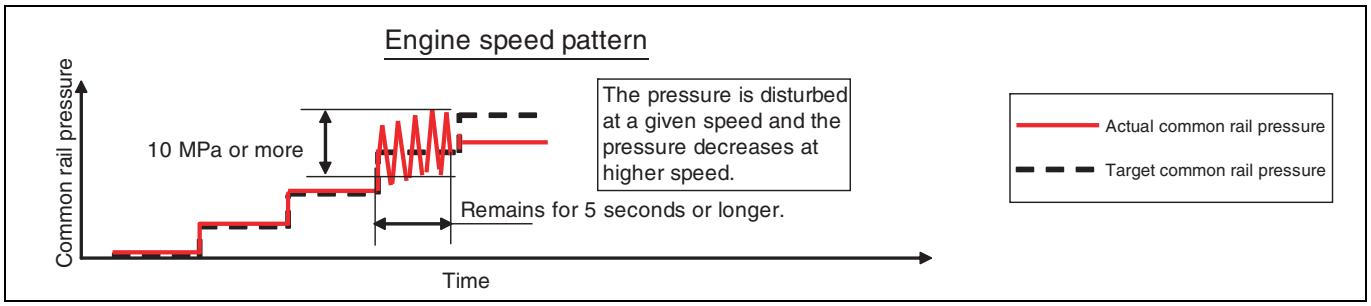


SAPH16F010300742

h. Hunting remains within 10 MPa or more for more than 5 seconds. → Replace the SCV.

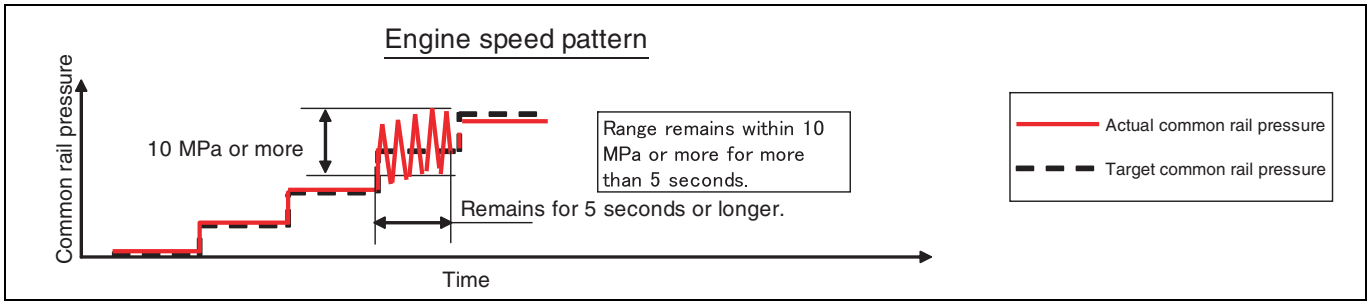


SAPH16F010300743

i. The engine stops during pressure relief. → Replace the SCV.

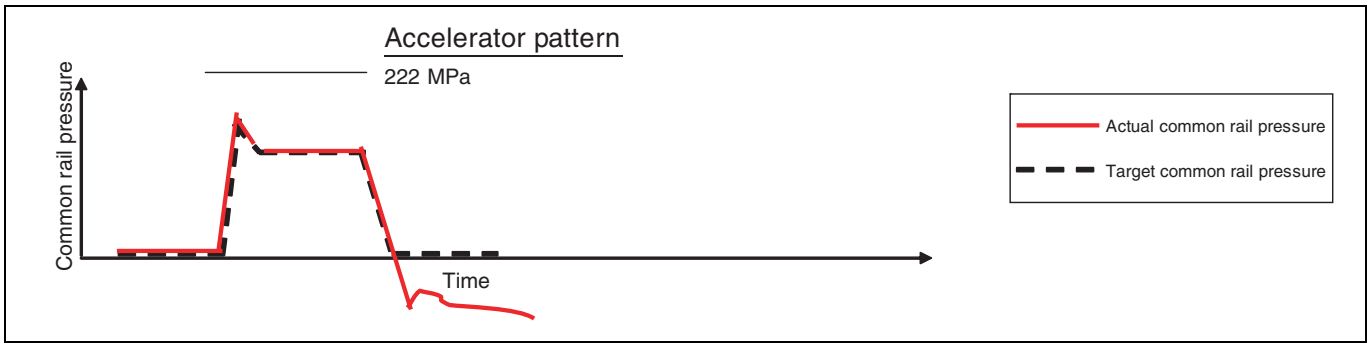


SAPH16F010300744

j. Target common rail pressure during idling deviates from the standard value. → Replace the SCV.

**<FINAL VALUE OF PUMP CURRENT TARGET test>**

1. After engine has reached operating temperature. (more than 82 °C {179.6 °F})
2. After air compressor has completed building pressure.
3. A/C, Head lights are off.
4. All other devices turned off. (PTO, Refrigeration compressor. etc)
5. Engine speed: 750 r/min

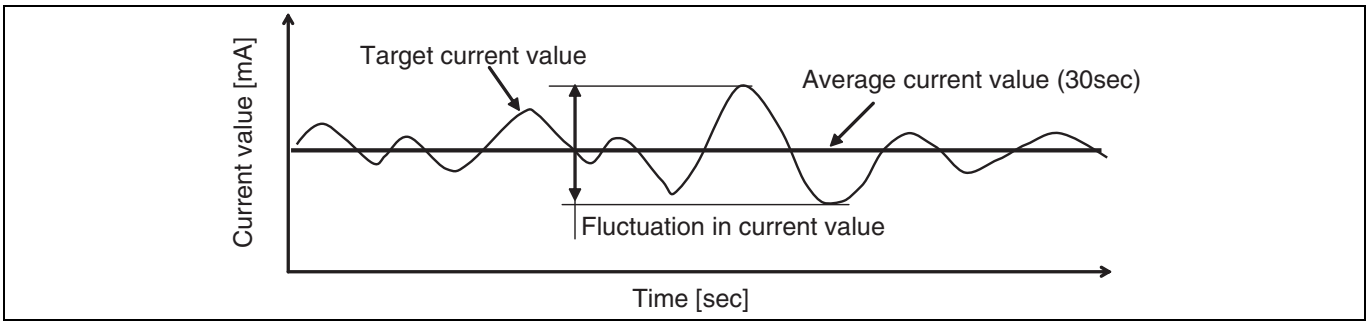


SAPH16F010300745

| Criteria | | |
|---|---|---|
| FINAL VALUE OF PUMP CURRENT TARGET | Average current value | 1,740 ± 80 mA |
| | Fluctuation in current value | < 80 mA |

# DTC: P200C

EN01H16F01030F03001134

## P200C: DPF over temperature

INFORMATION

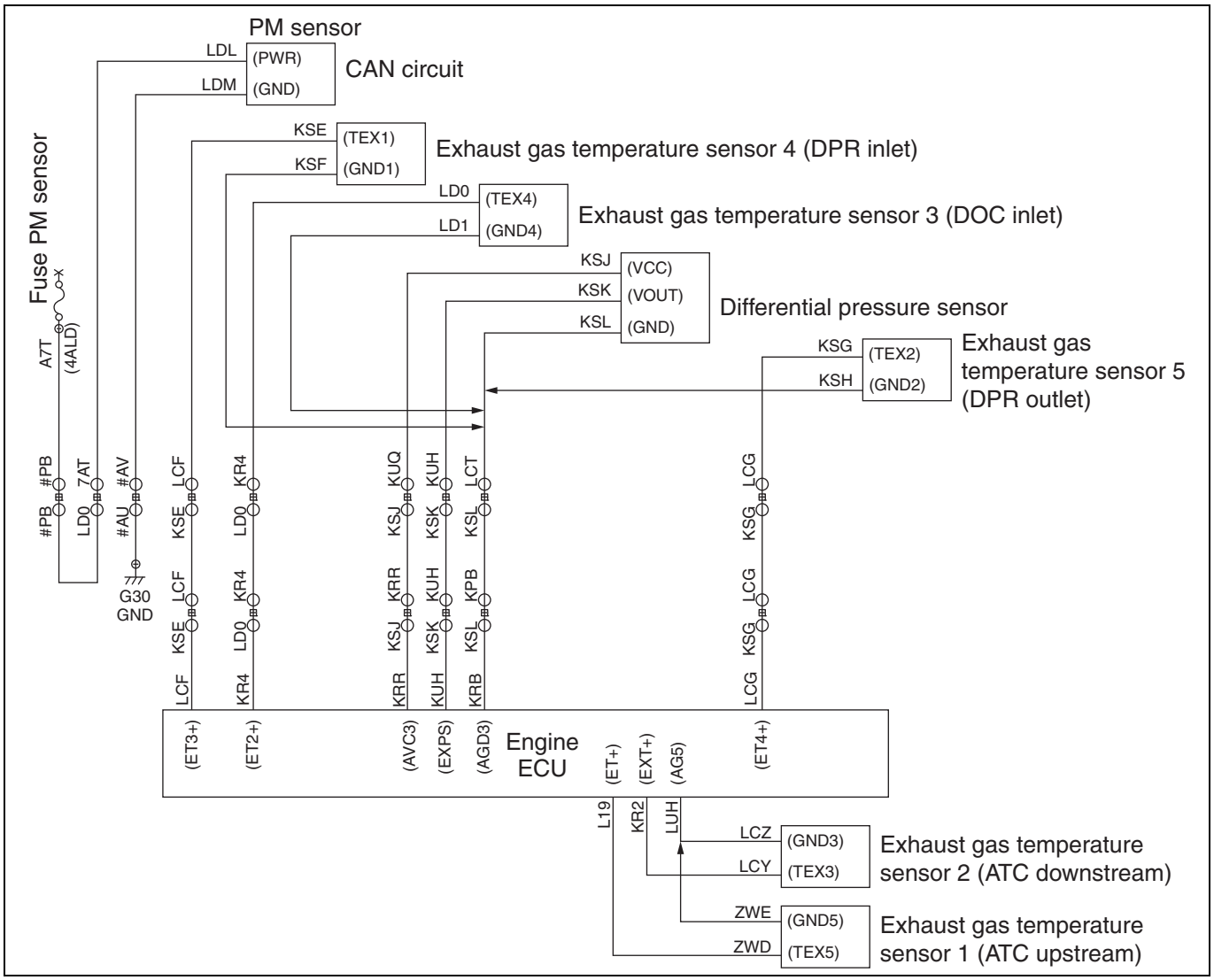


SAPH16F010300746

### 1. Technical description

- ECU constantly calculate and accumulate the amount of soot deposit from the engine.
  The DPR system will start increasing temperature of the DPR filter when the regeneration mode is selected based on this value to start regeneration.

**<Description of malfunction>**

- If an excessively high temperature is detected by the exhaust temperature sensor located in the downstream of DPR, it will be judged as an error.

### 2. DTC set condition

(1) DTC detection condition

- The engine must not be stopped.

(2) Judgment criteria

- Judge a reading taken by the DPR downstream (DPR outlet) exhaust gas temperature sensor 4 by referencing to a value specified below.
- Immediately judge when 965 °C {1,769 °F} is exceeded for continuous 5 minutes.

**3. Reset condition**

- After restoration to normal condition and DPR-related memory is reset.

**4. Indication, warning or system control regulation when the DTC is set.**

- MIL: ON
- SVS light: OFF

**5. Symptoms on the vehicle when the DTC is set**

**<Symptoms on the vehicle due to backup control (fail safe function)>**

- –

**<Symptoms on the vehicle due to malfunction>**

- –

**6. Pre-inspection work**

- Check that the battery voltage is in the normal range.

**7. After-inspection work**

- Clear all past DTCs.
- Check that no DTC is stored after test drive.
- Clear history of highest temperatures stored in engine ECU.
  (HINO DX II system protection data: Maximum exhaust temperature 1 (2) for monitor)

**8. Estimated failure factors**

- Judged by the abnormal temperature rise at regeneration due to excessive soot emission.
  Injector: Characteristic abnormality of injection volume
  SCV: Faulty control of common rail pressure
  EGR valve: Faulty control of EGR opening angle
  Diesel throttle valve: Faulty control of Diesel throttle valve opening angle
  Turbocharger: Faulty control of VNT
  Refer to "ENGINE BASIC INSPECTION SHEET (ENGINE INSPECTION CHECK SHEET)" on this manual for above inspection.

**[Confirmation points for judgment]**

- Fault in DPR downstream (DPR outlet) exhaust temperature sensor.
  Check whether the abnormal temperature is detected due to falsely-recognized by the sensor, or not.

## INSPECTION PROCEDURE: P200C

| 1 | Check the DTC detected (Engine ECU) [HINO DX II ] |
|---|---|

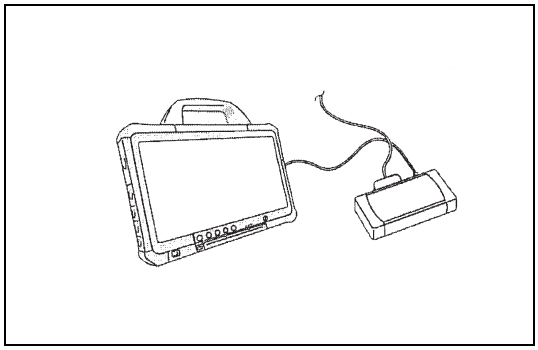

SAPH16F010300747

1. Set the starter switch to the "LOCK" position.
2. Connect the vehicle to HINO DX II .
3. Set the starter switch to the "ON" position.
4. Select [Engine] and check if any DTC other than P200C (for example P2470, P2471) has been detected.

**HINT**
**Due to sensor failures or for other reasons, P200C may have been detected.**
**First perform the diagnostics related to the other DTCs, such as sensors and engine related DTCs (Refer to "Estimated failure factors" in the previous pages).**

**Has a DTC other than P200C been detected?**

**YES** → **Go to diagnosis procedure of a related DTC.**

**NO** → **Go to step 2.**

| 2 | Inspect the exhaust pipe |
|---|---|

1. Check for dirt or soot in the exhaust pipe.

**Was any failure found?**

**YES** → **Go to step 3.**

**NO** → **Go to step 6.**

| 3 | Inspection of the exhaust gas temperature [HINO DX II ] |
|---|---|

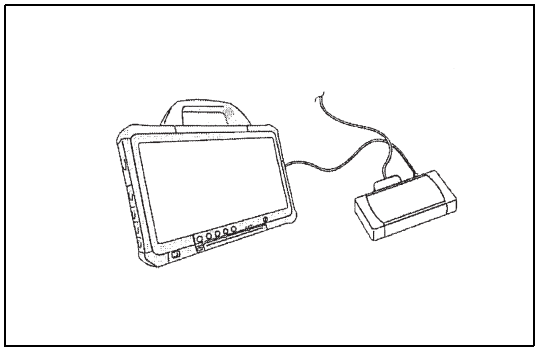

SAPH16F010300748

1. Set the starter switch to the "LOCK" position.
2. Replace the DPR filter
3. Connect the vehicle to HINO DX II . Select [Engine] then set up [DPR exhaust gas temperature (OUT)] from the [Data monitor Setting] menu.
4. Perform DPR manual regeneration and measure (monitor) the exhaust gas temperature.

| Standard values |
|---|
| Exhaust gas temperature: below 800°C {1,472°F} |

**Do the measurements meet the standard value?**

**YES**

**Go to step 4.**

**NO**

**Go to step 10.**

## 4 Inspect the injector [HINO DX ll ]

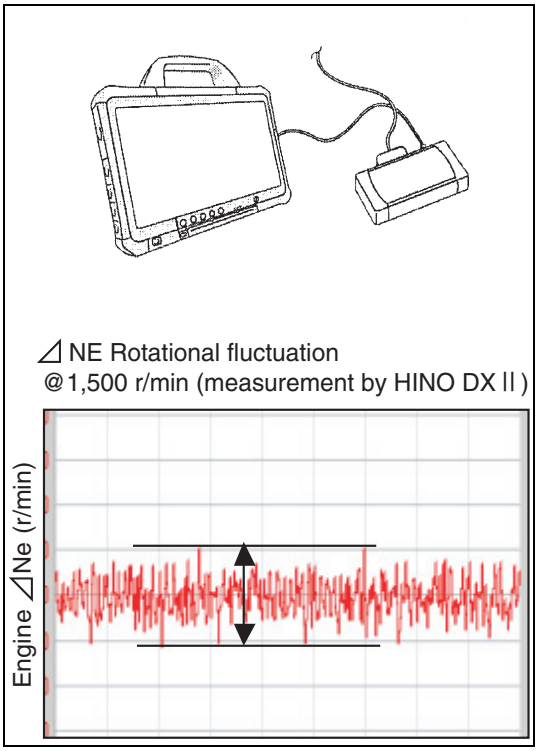


SAPH16F010300749

Check the injection quantity and the rotational fluctuation.

1. Start the engine.
2. Select [Injection quantity] from the [Data monitor Setting] menu and measure the injection quantity.
3. Select [Engine revolution] from the [Data monitor Setting] menu and measure the rotational fluctuation.

| Measurement conditions |
|---|
| **Engine speed: 1,500 r/min No-load,<br>T/M shift lever: Neutral position, A/C off and Air compressor non operating.<br>Engine coolant temperature: more than 80 °C {176 °F}** |

**Standard values**

| Type of | Q ($mm^3$/st) | ⊿Ne (r/min) |
|---|---|---|
| MT | 5.0q ≤ | ≤ 26 |
| Allison® 2200 | 6.0q ≤ | |
| Allison® 2500 | | |
| Allison® 3500 | | |

**Do the measurements meet the standard value?
(Both the injection quantity and the rotational fluctuation are within the standard values)**

**YES**

**Go to step 5.**

**NO**

**Replace the injector.
Perform "After-inspection work" of INFORMATION section.**

| 5 | Perform engine basic inspection |
|---|---|

1. Based on the Engine basic inspection sheet, inspect each engine part and system.

**HINT**
**Inspect each engine system and check for anything that may deteriorate the exhaust gas properties.**

**Was any failure found?**

| YES | NO |
|---|---|
| **Repair or replace the faulty part.**<br>**Perform "After-inspection work" of INFORMATION section.** | **Procedure completed.**<br>**Perform "After-inspection work" of INFORMATION section.** |

| 6 | Inspect the exhaust gas temperature sensor 5 (DPR outlet) connector |
|---|---|

1. Check the connection of the exhaust gas temperature sensor 5 (DPR outlet) connector (Looseness and poor contact).

**Was any failure found?**

| YES | NO |
|---|---|
| **Connect securely, repair if needed.**<br>**Perform "After-inspection work" of INFORMATION section.** | **Go to step 7.** |

| 7 | Inspect the outside of the exhaust gas temperature sensor 5 (DPR outlet) |
|---|---|

1. Check the installation of the exhaust gas temperature sensor 5 (DPR outlet).
2. Make sure there is no dirt or damage to the exhaust gas temperature sensor 5 (DPR outlet).

**Was any failure found?**

| YES | NO |
|---|---|
| **Clean the exhaust gas temperature sensor 5 (DPR outlet) and install it properly.**<br>**If damaged, replace the exhaust gas temperature sensor 5 (DPR outlet).**<br>**Perform "After-inspection work" of INFORMATION section.** | **Go to step 8.** |

| 8 | Inspect the exhaust gas temperature sensor 5 (DPR outlet) unit |
|---|---|

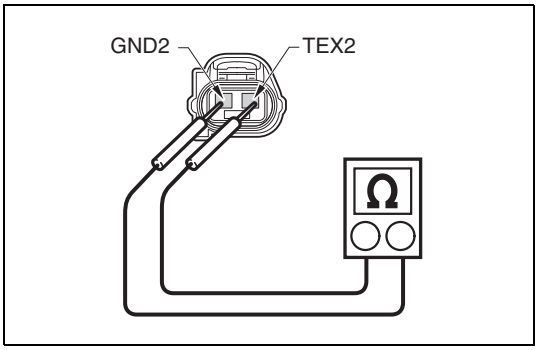

SAPH16F010300751

1. Set the starter switch to the "LOCK" position.
2. Disconnect the exhaust gas temperature sensor 5 (DPR outlet) connector.
3. Use the electrical tester to measure the resistance between the terminals of the exhaust gas temperature sensor 5 (DPR outlet).

| Measurement conditions | Tester connections | Standard values |
|---|---|---|
| **Starter switch: LOCK** | **Exhaust gas temperature sensor 5 (DPR outlet) TEX2 – GND2** | **20 °C {68 °F}: 13.7 – 29.8 kΩ 50 °C {122 °F}: 7.13 – 13.7 kΩ 80 °C {176 °F}: 4.1 – 7.13 kΩ** |

**Do the measurements meet the standard value?**

**YES**

**Go to step 9.**

**NO**

**Replace the exhaust gas temperature sensor 5 (DPR outlet).**
**Perform "After-inspection work" of INFORMATION section.**

| 9 | Check the DTC detected (Engine ECU) [HINO DX II ] |
|---|---|

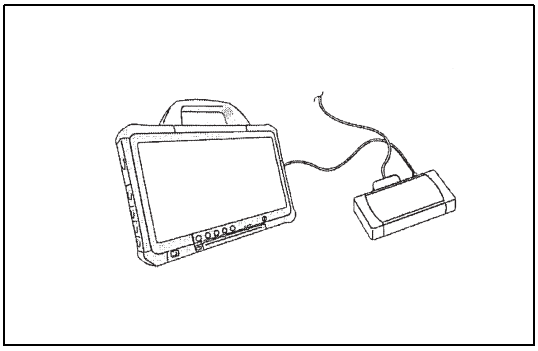
SAPH16F010300752

1. Perform DPR manual regeneration.
2. Set the starter switch to the "ON" position.
3. Select [Engine] and check if P200C has been detected.

**Has DTC P200C been detected?**

**YES**

**Go to step 3.**

**NO**

**Procedure completed.**
**Perform "After-inspection work" of INFORMATION section.**

# DTC: P2032 and P2033

EN01H16F01030F03001135

## P2032: Exhaust gas temperature sensor 2 (ATC downstream) - out of range (Out of range low)

INFORMATION

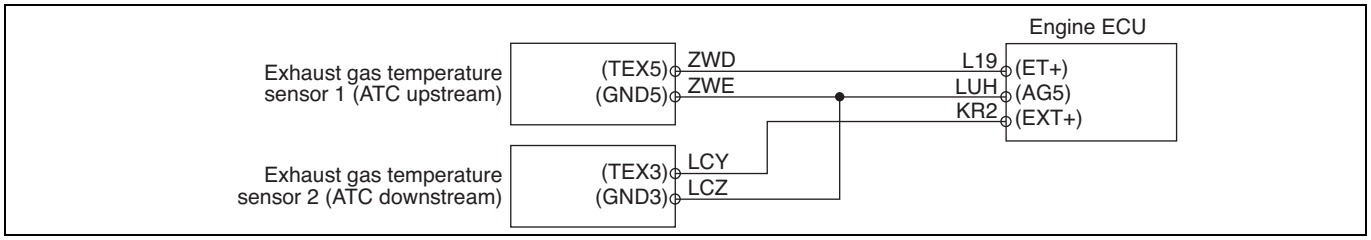


SAPH16F010300753

**1. Technical description**

- The exhaust gas temperature sensor 2 (ATC downstream) consistently detects exhaust gas temperature.
- A reading taken by the exhaust gas temperature sensor 2 (ATC downstream) is used to control DPR regeneration.

**<Description of malfunction>**

- Exhaust gas temperature sensor 2 (ATC downstream) detects circuit voltage abnormality.

**2. DTC set condition**

(1) DTC detection condition

- Battery voltage is in the range of 11 V to 16 V.

(2) Judgment criteria

- Voltage of the exhaust gas temperature sensor 2 (ATC downstream) remains less than 0.063 V (1,165°C {2,129°F}) for 3 seconds.

**3. Reset condition**

- After restoration to normal condition

**4. Indication, warning or system control regulation when the DTC is set.**

- MIL: ON
- SVS light: OFF

**5. Symptoms on the vehicle when the DTC is set**

**<Symptoms on the vehicle due to backup control (fail safe function)>**

- –

**<Symptoms on the vehicle due to malfunction>**

- –

**6. Pre-inspection work**

- Check that the battery voltage is in the normal range.

**7. After-inspection work**

- Clear all past DTCs.
- Check that no DTC is stored after test drive.

**8. Estimated failure factors**

**Exhaust gas temperature sensor 2 (ATC downstream):**

- Loose/disconnected sensor or failure in sensing area (contamination, clogging or breakage)
- Abnormal resistance of sensor
- Failure in engine ECU sensor power supply
- Disconnection or short-circuit in sensor harness
- Irregular contact (disconnection or poor fit of connector)

## P2033: Exhaust gas temperature sensor 2 (ATC downstream) - out of range (Out of range high)

INFORMATION

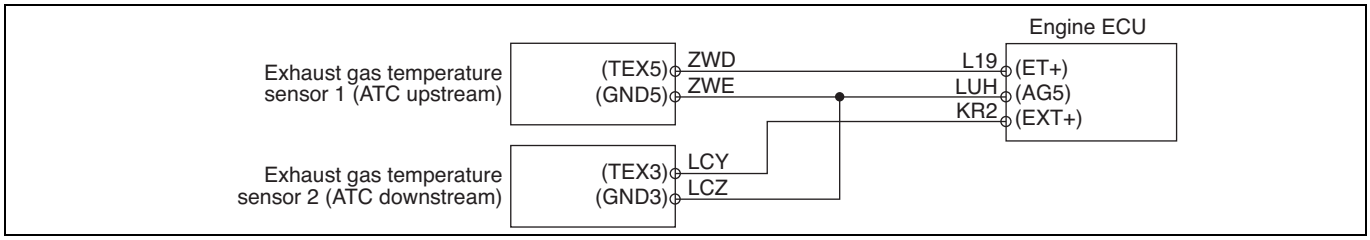


SAPH16F010300754

**1. Technical description**

- The exhaust gas temperature sensor 2 (ATC downstream) consistently detects exhaust gas temperature.
- A reading taken by the exhaust gas temperature sensor 2 (ATC downstream) is used to control DPR regeneration.

**<Description of malfunction>**

- Exhaust gas temperature sensor 2 (ATC downstream) detects circuit voltage abnormality.

**2. DTC set condition**

(1) DTC detection condition

- Intake air temperature is -20°C {-4°F} or higher.
- Battery voltage is in the range of 10 V to 16 V.

(2) Judgment criteria

- Voltage of the exhaust gas temperature sensor 2 (ATC downstream) remains at 4.958 V or higher (-46°C {-50.8°F} or lower) for 3 seconds.

**3. Reset condition**

- After restoration to normal condition

**4. Indication, warning or system control regulation when the DTC is set.**

- MIL: ON
- SVS light: OFF

**5. Symptoms on the vehicle when the DTC is set**

**<Symptoms on the vehicle due to backup control (fail safe function)>**

- –

**<Symptoms on the vehicle due to malfunction>**

- –

**6. Pre-inspection work**

- Check that the battery voltage is in the normal range.

**7. After-inspection work**

- Clear all past DTCs.
- Check that no DTC is stored after test drive.

**8. Estimated failure factors**

**Exhaust gas temperature sensor 2 (ATC downstream):**

- Loose/disconnected sensor or failure in sensing area (contamination, clogging or breakage)
- Abnormal resistance of sensor
- Failure in engine ECU sensor power supply
- Disconnection or short-circuit in sensor harness
- Irregular contact (disconnection or poor fit of connector)

## INSPECTION PROCEDURE: P2032 and P2033

| 1 | Inspect the exhaust gas temperature sensor 2 (ATC downstream) connector |
|---|---|

1. Check the connection of the exhaust gas temperature sensor 2 (ATC downstream) connector (looseness or poor contact).

**Was any failure found?**

**YES**

**Connect securely, repair if needed.**
**Perform "After-inspection work" of INFORMATION section.**

**NO**

**Go to step 2.**

| 2 | Inspect the exhaust gas temperature sensor 2 (ATC downstream) |
|---|---|

1. Check the installation of the exhaust gas temperature sensor 2 (ATC downstream).
2. Make sure there is no dirt, damage or clogging in the sensing unit of the exhaust gas temperature sensor 2 (ATC downstream).

**Was any failure found?**

**YES**

**Clean the sensing unit and connect the sensor securely.**
**If damaged, replace the exhaust gas temperature sensor 2 (ATC downstream).**
**Perform "After-inspection work" of INFORMATION section.**

**NO**

**Go to step 3.**

| 3 | Inspect the exhaust gas temperature sensor 2 (ATC downstream) unit |
|---|---|

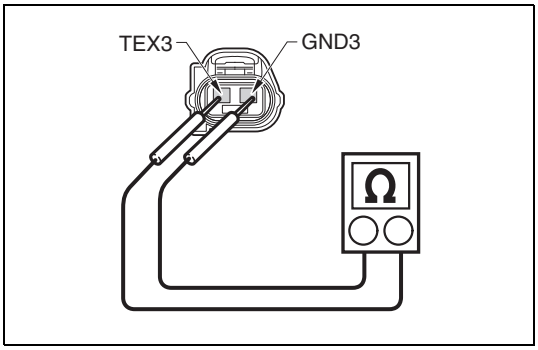


SAPH16F010300755

1. Set the starter switch to the "LOCK" position.
2. Disconnect the exhaust gas temperature sensor 2 (ATC downstream) connector.
3. Use the electrical tester to measure the resistance between the terminals of the exhaust gas temperature sensor 2 (ATC downstream).

| Measurement conditions | Tester connections | Standard values |
|---|---|---|
| Starter switch: LOCK | Exhaust gas temperature sensor 2 (ATC downstream) TEX3 – GND3 | 20°C {68°F}: 13.7 – 29.8 kΩ<br>50°C {122°F}: 7.13 – 13.7 kΩ<br>80°C {176°F}: 4.1 – 7.13 kΩ |

**Do the measurements meet the standard value?**

**YES**

**Go to step 4.**

**NO**

**Replace the exhaust gas temperature sensor 2 (ATC downstream).**
**Perform "After-inspection work" of INFORMATION section.**

| 4 | Inspect the sensor power supply |
|---|---|

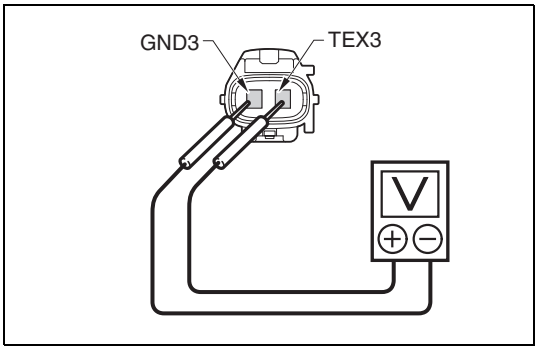


SAPH16F010300756

1. Set the starter switch to the "ON" position.
2. Use the electrical tester to measure the voltage between the terminals of the exhaust gas temperature sensor 2 (ATC downstream).

| Measurement conditions | Tester connections | Standard values |
|---|---|---|
| Starter switch: ON | Exhaust gas temperature sensor 2 (ATC downstream) vehicle-side connector TEX3 – GND3 | 4.5 – 5.5 V |

**Do the measurements meet the standard value?**

YES

**Go to step 7.**

NO

**Go to step 5.**

## 5 Check short-circuit in wire harness of exhaust gas temperature sensor 2 (ATC downstream)

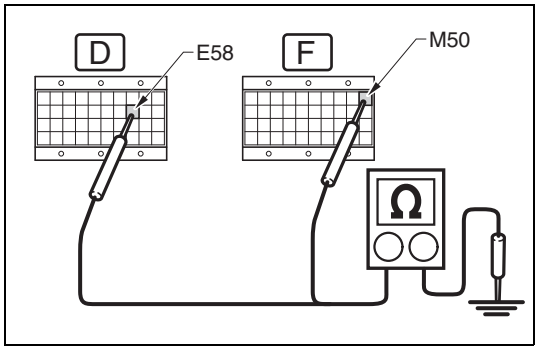

SAPH16F010300757

1. Set the starter switch to the "LOCK" position.
2. Connect the signal check harness to the engine ECU vehicle-side harness. (Do not connect the harness to the ECU.)
3. Use the electrical tester to measure the resistance between the engine ECU (signal check harness) terminals and ground.

| Measurement conditions | Tester connections | Standard values |
|---|---|---|
| **Starter switch: LOCK** | **Engine ECU (signal check harness) EXT+ (M50) – Ground AG5 (E58) – Ground** | **∞ Ω** |

**Do the measurements meet the standard value?**

YES

**Go to step 6.**

NO

**Repair or replace the harness.**
**Perform "After-inspection work" of INFORMATION section.**

## 6 Check disconnection in wire harness of exhaust gas temperature sensor 2 (ATC downstream)

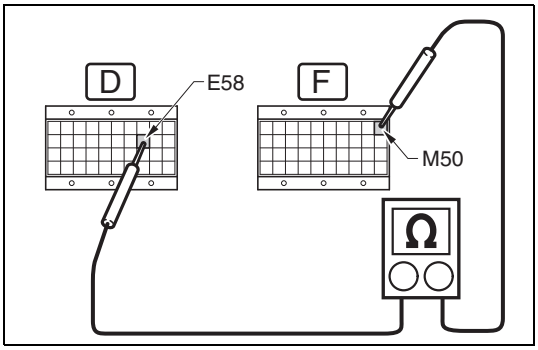

SAPH16F010300758

1. Connect the exhaust gas temperature sensor 2 (ATC downstream) connector.
2. Use the electrical tester to measure the resistance between the terminals of the engine ECU (signal check harness).

| Measurement conditions | Tester connections | Standard values |
|---|---|---|
| **Starter switch: LOCK** | **Engine ECU (signal check harness) EXT+ (M50) – AG5 (E58)** | **20 °C {68°F}: 13.7 – 29.8 kΩ 50°C {122°F}: 7.13 – 13.7 kΩ 80°C {176°F}: 4.1 – 7.13 kΩ** |

**Do the measurements meet the standard value?**

**YES**

**Go to step 7.**

**NO**

**Repair or replace the harness.**
**Perform "After-inspection work" of INFORMATION section.**

## 7 Check the DTC detected (Engine ECU)

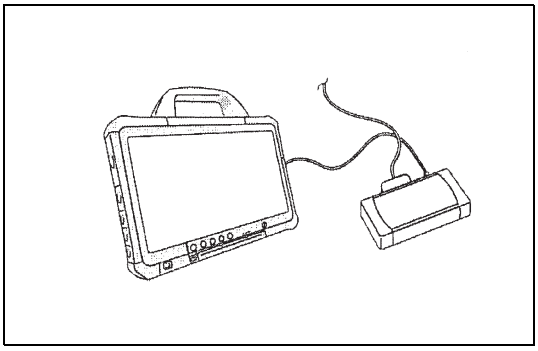
SAPH16F010300759

1. Perform engine warm up. (engine coolant temperature: 80°C {176°F} or more)
2. Stop the engine and set the starter switch to the "LOCK" position.
3. Connect the vehicle to HINO DX II .
4. Set the starter switch to the "ON" position.
5. Select [Engine] and check if the DTC (P2032 or P2033) has been detected.

**Has DTC (P2032 or P2033) been detected?**

**YES**

**Replace the engine ECU.**
**Perform "After-inspection work" of INFORMATION section.**

**NO**

**Procedure completed.**
**Perform "After-inspection work" of INFORMATION section.**

# DTC: P203F

EN01H16F01030F03001136

## P203F: Empty reductant tank

INFORMATION

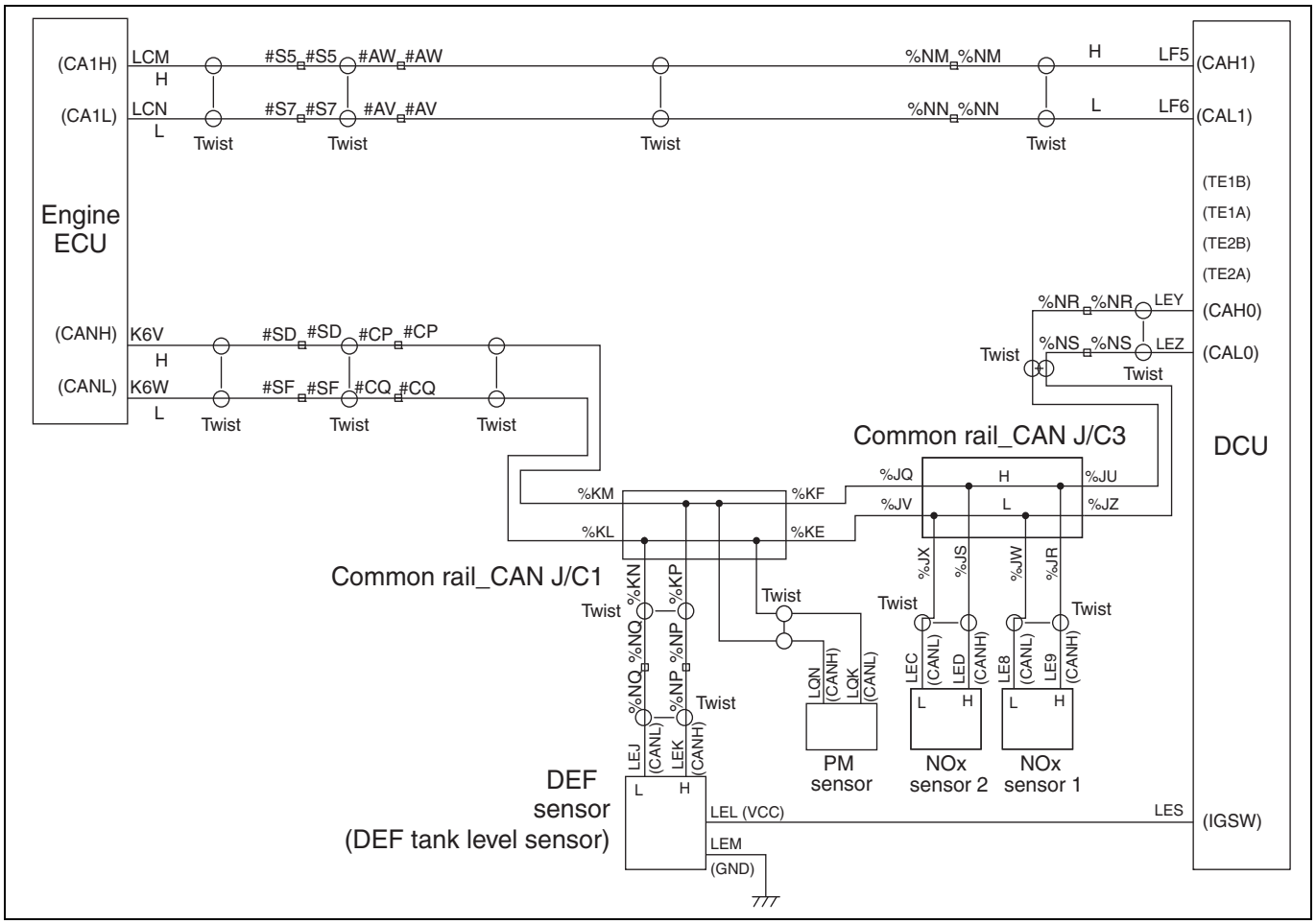


SAPH16F010300760

### 1. Technical description

- The amount of DEF solution remaining in the tank is detected to the 10 % level by the DEF tank level sensor, and in the 10 % → 0 % range, the amount of DEF solution to be added is calculated and detected in the engine ECU.

**<Description of malfunction>**

- Remaining DEF level of 5 % or less in DEF tank is detected.

### 2. DTC set condition

(1) DTC detection condition

- Remaining DEF level ≤ 10 %

(2) Judgment criteria

- Remaining DEF level (=DEF tank level - (Calculated Accumulated DEF dosing amount (=Σ (DEF dosing quantity (from DCU)))/DEF tank volume)) ≤ 5 %

### 3. Reset condition

- Just after restoration to normal condition.

**4. Indication, warning or system control regulation when the DTC is set.**

- MIL: OFF
- SVS light: ON (Remaining DEF level lamp)
- Engine output is restricted.
- Vehicle speed is restricted.

**5. Symptoms on the vehicle when the DTC is set**

**<Symptoms on the vehicle due to backup control (fail safe function)>**

- Engine output is insufficient.
- Vehicle does not speed up.

**<Symptoms on the vehicle due to malfunction>**

- –

**6. Pre-inspection work**

- Check that the battery voltage is in the normal range.

**7. After-inspection work**

- Clear all past DTCs.
- Check that no DTC is stored after test drive.

**8. Estimated failure factors**

- Remaining DEF level is low.
- DEF tank level sensor failure

## INSPECTION PROCEDURE: P203F

| 1 | Inspect the DEF tank |
|---|---|

1. Fill the DEF tank to the Full mark.

**Did the DEF level indicator indicate 100 %?**

| YES | NO |
|---|---|
| **Procedure completed.**<br>**Perform "After-inspection work" of INFORMATION section.** | **Go to step 2.** |

| 2 | Inspect the DEF tank level sensor connector |
|---|---|

1. Check the connection of the DEF tank level sensor connector (Looseness and poor contact).

**Was any failure found?**

| YES | NO |
|---|---|
| **Connect securely, repair if needed.**<br>**Perform "After-inspection work" of INFORMATION section.** | **Go to step 3.** |

| 3 | Inspect the DEF tank level sensor |
|---|---|

1. Check if the DEF tank level sensor float is disconnected, stuck, or damaged.

**Was any failure found?**

| YES | NO |
|---|---|
| **Replace the DEF tank level sensor.**<br>**Perform "After-inspection work" of INFORMATION section.** | **Go to step 4.** |

| 4 | Check the DTC detected (Engine) [HINO DX II ] |
|---|---|

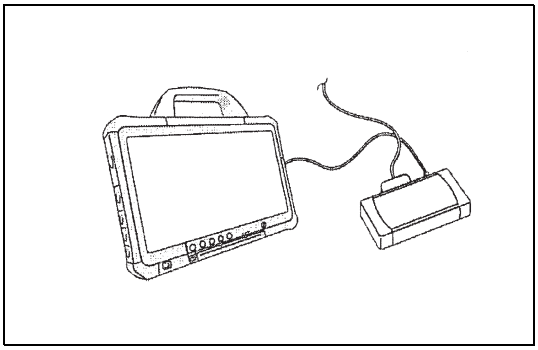

SAPH16F010300761

1. Connect the vehicle to HINO DX II .
2. Set the starter switch to the "ON" position.
3. Select [Engine] and check if a CAN communication system malfunction (U02A2) has been detected.

**Had DTC U02A2 been detected?**

**YES**

**Go to the diagnostic procedure of a related DTC.**

**NO**

**Replace the DEF tank level sensor, and go to step 5.**

| 5 | Check the DTC detected (Engine ECU) [HINO DX II ] |
|---|---|

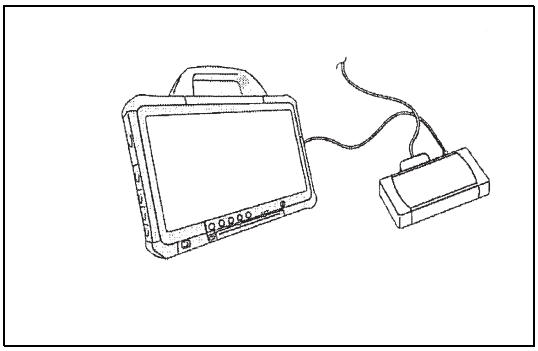

SAPH16F010300762

1. Connect the vehicle to HINO DX II .
2. Set the starter switch to the "ON" position.
3. Select [Engine] and check if P203F has been detected.

**Has DTC P203F been detected?**

**YES**

**Replace the engine ECU.**
**Perform "After-inspection work" of INFORMATION section.**

**NO**

**Procedure completed.**
**Perform "After-inspection work" of INFORMATION section.**

# DTC: P204F

EN01H16F01030F03001137

## P204F: Reductant System Performance

INFORMATION

**1. Technical description**

- DEF SCR system failures are diagnosed with the DCU (Dosing Control Unit).
- Determine system in the DCU and diagnose malfunction with HINO DX II .

**<Description of malfunction>**

- –

**2. DTC set condition**

(1) DTC detection condition

- –

(2) Judgment criteria

- –

**3. Reset condition**

- Just after restoration to normal condition.

**4. Indication, warning or system control regulation when the DTC is set.**

- MIL: ON
- SVS light: OFF
- Engine output is restricted.
- Vehicle speed is restricted.

**5. Symptoms on the vehicle when the DTC is set**

**<Symptoms on the vehicle due to backup control (fail safe function)>**

- Engine output is insufficient.
- Vehicle does not speed up.

**<Symptoms on the vehicle due to malfunction>**

- –

**6. Pre-inspection work**

- Check that the battery voltage is in the normal range.

**7. After-inspection work**

- Clear all past DTCs.
- Check that no DTC is detected after test drive.

**8. Estimated failure factors**

- Detected a malfunction of the DCU.
- Connect HINO DX II to the DCU and refer to estimated failure factors of each DTC.

## INSPECTION PROCEDURE: P204F

| 1 | Check the DTC detected (Engine ECU) [HINO DX II ] |
|---|---|

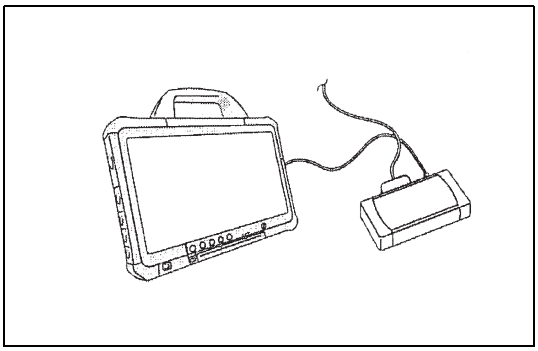

SAPH16F010300763

1. Set the starter switch to the "LOCK" position.
2. Connect the vehicle to HINO DX II .
3. Set the starter switch to the "ON" position.
4. Select [Engine] and check if P204F has been detected.

**Has DTC P204F been detected?**

**YES**

**Go to the DTC diagnosis of the DEF SCR system (DCU).**

**HINT**

**In case the DTC P204F has being recorded in the engine ECU, but no DTC has been detected in the DCU, it is safe to think that power supply to the DCU was interrupted before the DTC was recorded into the DCU.**

**In that case, please check for corrosion or abnormalities on the battery terminal.**

**If there is abnormality, clean or replace the battery terminal, and after deleting past DTC please verify again if P204F is detected.**

**NO**

**Procedure completed.**

**Perform "After-inspection work" of INFORMATION section.**

# DTC: P206B

EN01H16F01030F03001138

## P206B: DEF quality sensor - rationality

INFORMATION

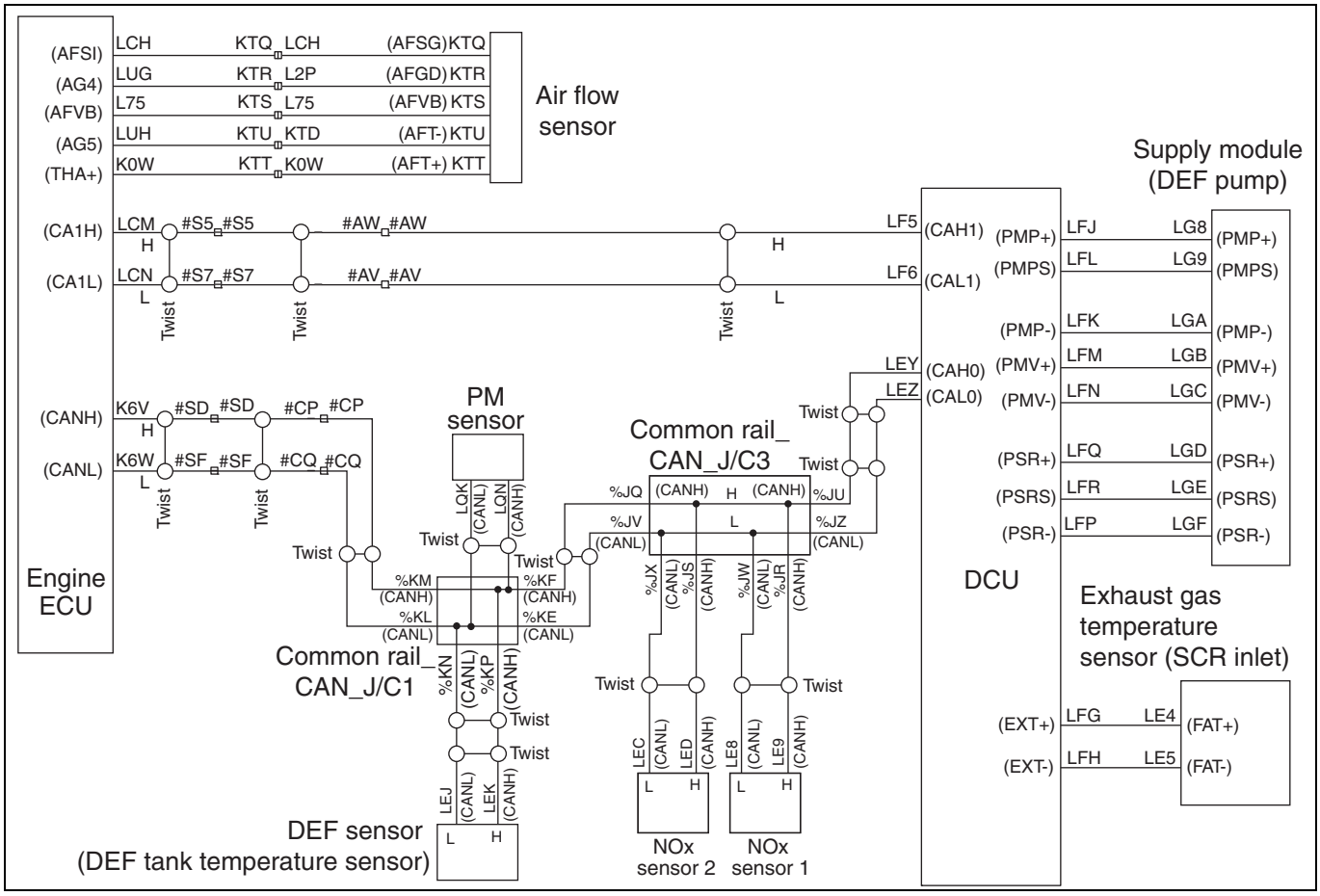


SAPH16F010300764

**1. Technical description**

- Deterioration of SCR catalyst is determined by a decision of a drop in the NOx conversion efficiency and the DEF concentration.
- Conversion efficiency is calculated by upstream and downstream NOx sensors.
- Besides other factors, conversion efficiency may drop due to the increase or decrease of DEF amount supplied to the sensing unit.
- DEF SCR catalyst concentration is measured by a DEF quality sensor.

**<Description of malfunction>**

- Malfunction of DEF quality sensor is detected.

**2. DTC set condition**

(1) DTC detection condition

a. Conditions below continue for 5 seconds.
1,000 r/min ≤ Engine speed ≤ 2,500 r/min
Engine speed ≥ 300 r/min for 3 seconds.
30 $mm^3$/st. cyl. ≤ Fuel injection quantity < 150 $mm^3$/st. cyl.
300 kg/h ≤ Exhaust gas mass flow < 1,000 kg/h
210 °C {410 °F} ≤ SCR catalyst temperature < 260 °C {500 °F}
50 ppm ≤ NOx (SCR upstream) < 1,000 ppm
Intake air temperature > -20 °C {-4 °F}
60 % ≤ Ratio of actual $NH_3$ load < 120 %

Calculated HC load < 0.1 g
NOx sensor 1 (SCR upstream) and NOx sensor 2 (SCR downstream) are valid for 121 seconds.
DPF active regeneration not in process.

b. Conditions below continue for 10 seconds.
DEF defrosting completed (DEF take temperature ≥ -5 °C {23 °F})
Exhaust gas temperature (SCR inlet) > 150 °C {302 °F}
Engine speed ≥ 350 r/min
Vehicle speed > 6.2 mph
11 V < Battery voltage < 32 V
DEF quality sensor is valid.

(2) Judgment criteria
The conditions described below are formed.

a. Calculate Average NOx conversion efficiency from NOx sensor 1 (upstream) and 2 (downstream).
Target NOx conversion efficiency (from DCU) - Average NOx conversion efficiency < 0.99

b. Average DEF concentration ≤ 16 %

**3. Reset condition**

- Immediately after normal operation is restored and SCR-related memory is reset.

**4. Indication, warning or system control regulation when the DTC is set.**

- MIL: ON
- SVS Light: OFF

**5. Symptoms on the vehicle when the DTC is set**

**<Symptoms on the vehicle due to backup control (fail safe function)>**

- –

**<Symptoms on the vehicle due to malfunction>**

- –

**6. Pre-inspection work**

- Check that the battery voltage is in the normal range.

**7. After-inspection work**

- Clear all past DTCs.
- Form the DTC detection condition.
- Check that no DTC is detected after test drive.

**8. Estimated failure factors**

- Faulty DEF solution reduction
- Harness disconnection or short-circuit
- NOx sensor failure
- Air flow sensor failure
- Exhaust gas temperature sensor (SCR inlet) failure
- DEF quality sensor failure
- SCR catalyst: miscalculation of adsorption amount or HC poisoning

**NOTICE**

**If no trouble causes are found , it can be suspected that the respective DTC was issued because of a temporary fault condition caused by the freezing of the DEF.**

## INSPECTION PROCEDURE: P206B

| 1 | Check the DTC detected [HINO DX II ] |
|---|---|

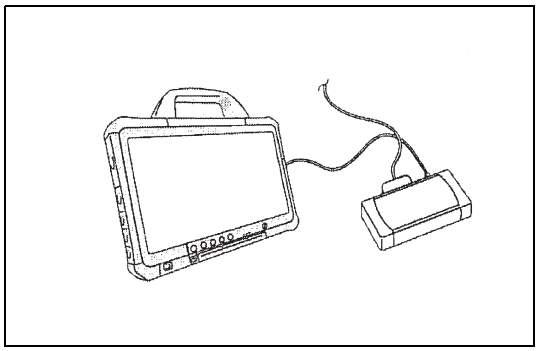

SAPH16F010300765

1. Set the starter switch to the "LOCK" position.
2. Connect the diagnostic system (HINO DX II ) to the vehicle.
3. Set the starter switch to the "ON" position.
4. Select [Engine] on the screen of HINO DX II and check it the DTC P206B has been detected.

**Has any DTC related to P206B been detected?**

**YES**

**Go to diagnosis procedure of the related DTC.**
**After repair, go to step 2.**

**NO**

**Go to step 2.**

| 2 | Check the DEF solution |
|---|---|

1. Check the DEF solution concentration.

| Standard values |
|---|
| 32.5 ± 2.5 % |

**Do the measurements meet the standard value?**

**YES**

**Go to step 3.**

**NO**

**Replace the DEF solution.**
**If the DEF concentration is below the standard, drain the DEF solution through the tank drain with the starter switch ON, and then refill the tank with at least 5 liters {1.3 gallons} of DEF. Afterward, drive the vehicle and confirm that the problem does not recur under driving conditions.**
**Perform "After-inspection work" of INFORMATION section.**

| 3 | Inspect the NOx sensor No.1 (SCR upstream) [HINO DX II ] |
|---|---|

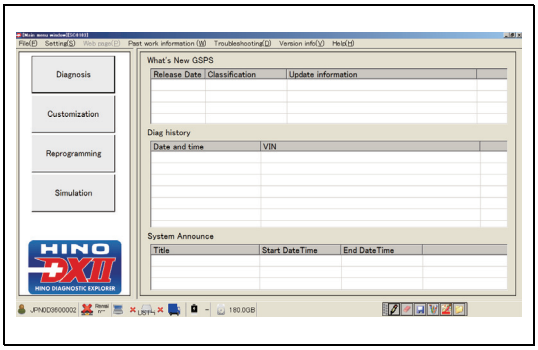


SAPH16F010300766

1. Turn the starter key to the "ON" position.

2. Start DX II .

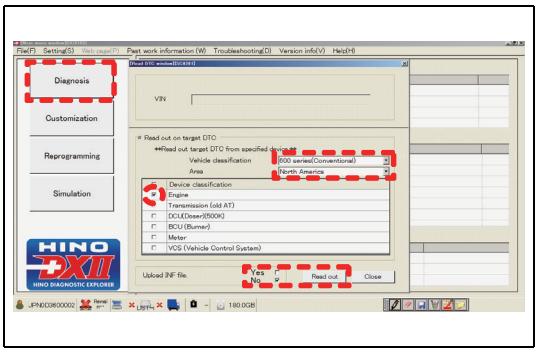


SAPH16F010300767

3. On the DX II window, click [Diagnosis].
   Select the vehicle model and region, and check [Engine].
   Select either Upload INF file and then [Read out] to read out.

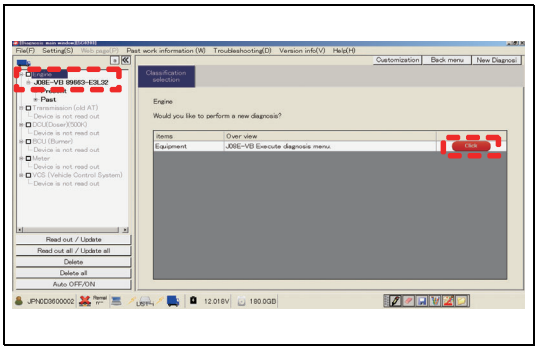


SAPH16F010300768

4. Select [Engine], and press the click button.

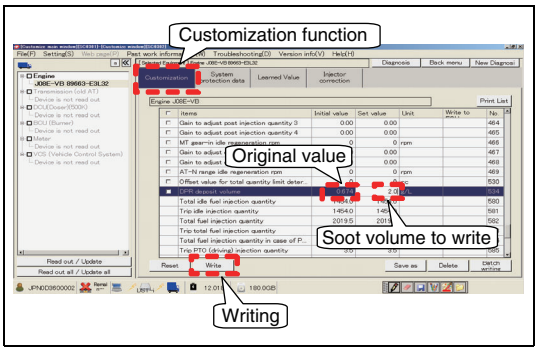


SAPH16F010300769

5. Writing soot volume

**HINT**

**As in the window on the left, write a soot volume [2.0] using the customization function. Record the original value not to forget. The example in the window is [0.674].**

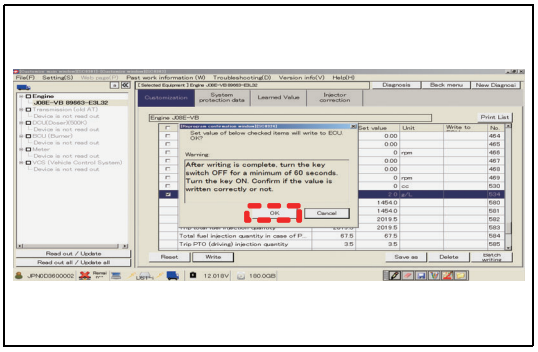


SAPH16F010300770

6. Turn the starter key "OFF" and then "ON" according to the instruction.
Then, click [OK].

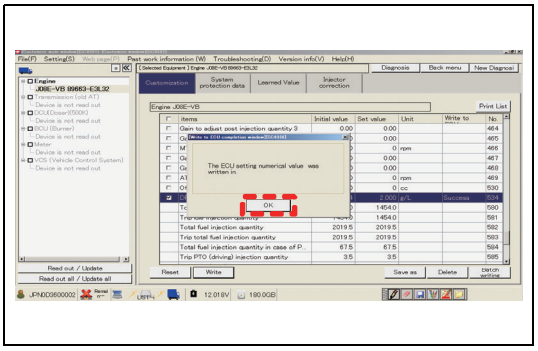


SAPH16F010300771

7. Check that ECU writing has been completed. Click [OK].
Refer to the window on the left.

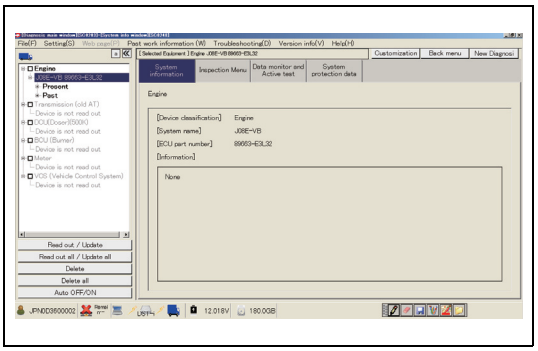

SAPH16F010300772

8. Start monitoring using the data monitoring function of DX II .
Check the output waveform of the NOx sensor on the monitor.

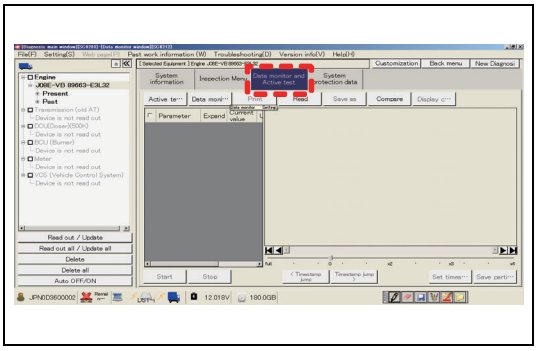

SAPH16F010300773

9. Select [Data monitor and Active test].

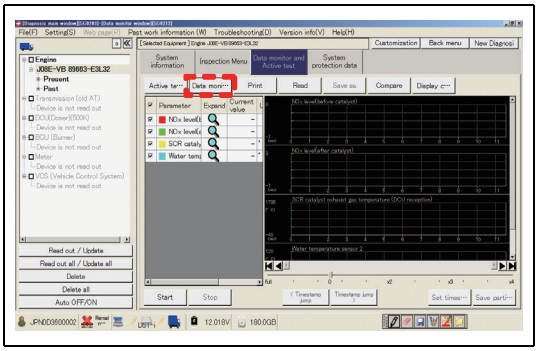

SAPH16F010300774

10. Select [Data monitor Setting].
Refer to the window on the left.

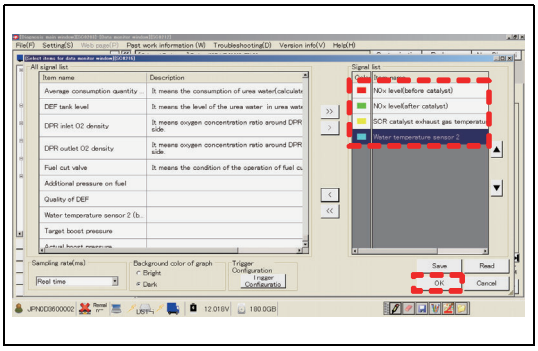

SAPH16F010300775

11. From the selection window on the left, select the following 4 items. Click OK.

- NOx level (before catalyst)
- NOx level (after catalyst)
- SCR catalyst exhaust gas temperature (DCU reception)
- Water temperature sensor 2

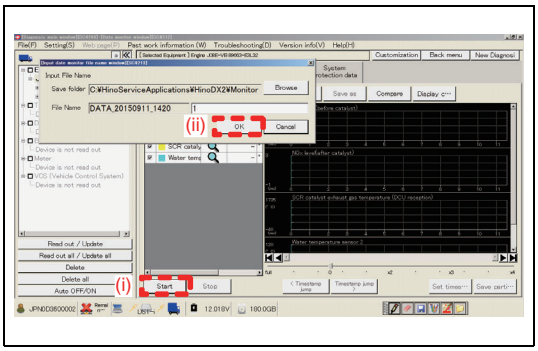


SAPH16F010300776

12. (i) Click [Start] to display the window to check the data storage destination.
(ii) Click [OK] to start data monitoring.

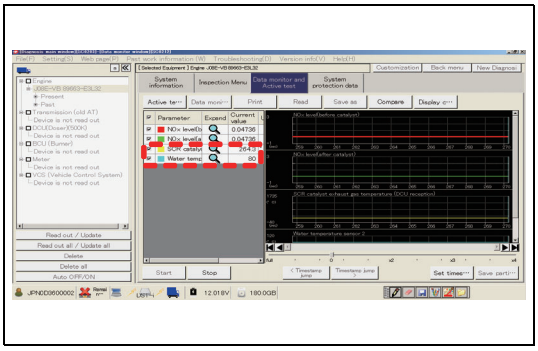

SAPH16F010300777

13. Start the engine.

14. Press the DPR manual regeneration switch of the vehicle.

**HINT**

**Since NOx sensor waveform is not detected until the exhaust gas temperature and coolant temperature reach the specified values or more, perform DPR regeneration to increase the exhaust gas temperature and coolant temperature.**

15. On the DX II data monitor, monitor the SCR catalyst temperature, coolant temperature and NOx levels before and after.

16. When the SCR catalyst temperature reaches 250 °C {482 °F} and coolant temperature reaches 70 °C {158 °F}, press the DPR switch (button) to stop the regeneration.

17. Following the determination manual, determine the quality of the sensor according to the NOx sensor waveform data on the monitor.
This is the end of the trouble shooting.

18. Turn the starter key OFF once to stop the engine. Turn it ON again.
19. After completing the trouble shooting, rewrite the soot volume to the original value.
    Select [Engine] as in the window on the left. Click the [Click] button.

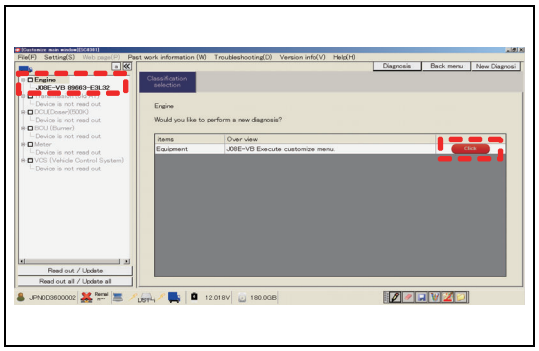

SAPH16F010300778

20. Rewrite the soot volume to the recorded original value.
    Refer to the window on the left.
    For the case of this window, the soot volume to write is [0.6].

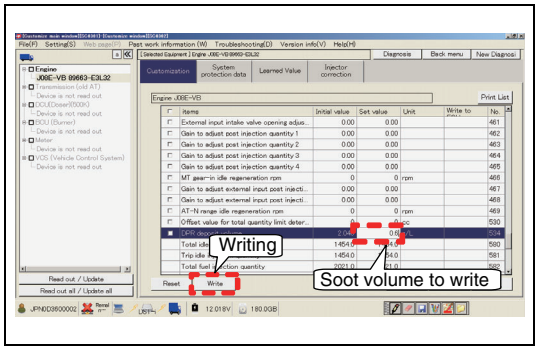


SAPH16F010300779

21. Check that the original soot volume has been written, and click [OK].
    Refer to the window on the left.

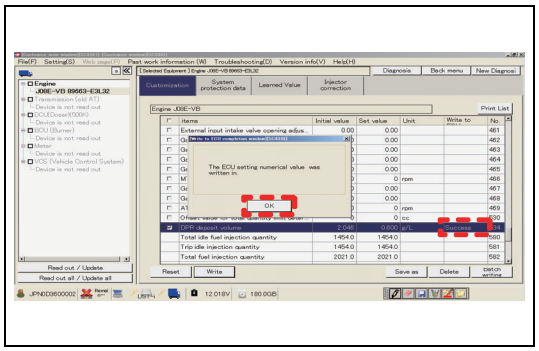

SAPH16F010300780

22. Select [System protection data] to check [Manual regeneration completion frequency]. Click [Reset]. Refer to the window on the left.

**NOTICE**

**Unless this memory reset is performed, the DTC of abnormal regeneration frequency would turn on.**

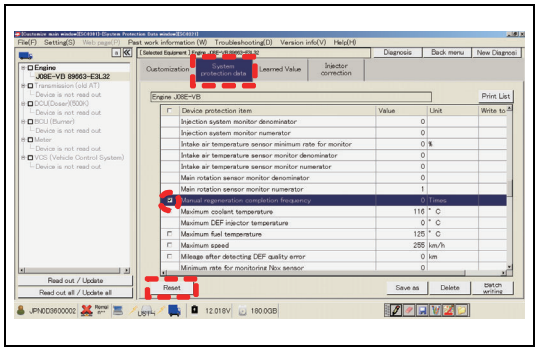

SAPH16F010300781

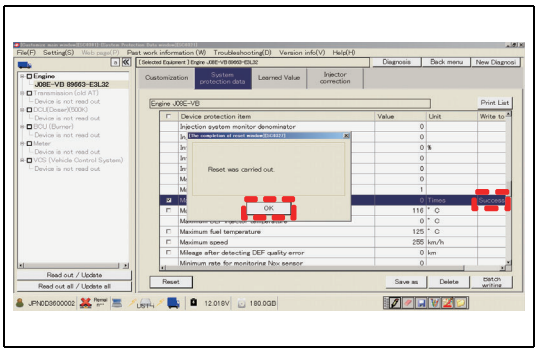

SAPH16F010300782

23. Check that the memory reset has been completed. Click [OK].
Refer to the window on the left.

**NOx controller operates properly?**

**YES**

**Go to step 4.**

**NO**

**Replace NOx sensor 1 (SCR upstream) that does not operate properly.**

## 4 Inspect the NOx sensor No.2 (SCR downstream) [HINO DX II ]

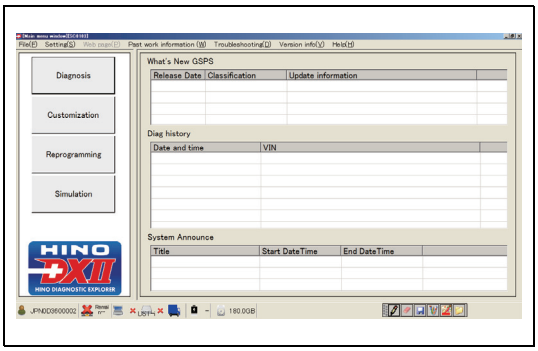


SAPH16F010300783

1. Turn the starter key to the "ON" position.

2. Start DX II .

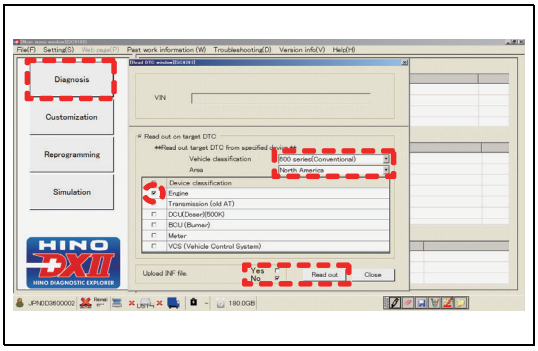


SAPH16F010300784

3. On the DX II window, click [Diagnosis].
Select the vehicle model and region, and check [Engine].
Select either Upload INF file and then [Read out] to read out.

4. Select [Engine], and press the click button.

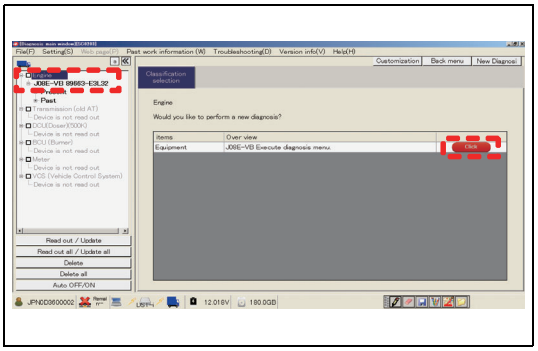

SAPH16F010300785

5. Writing soot volume

**HINT**

**As in the window on the left, write a soot volume [2.0] using the customization function. Record the original value not to forget. The example in the window is [0.674].**

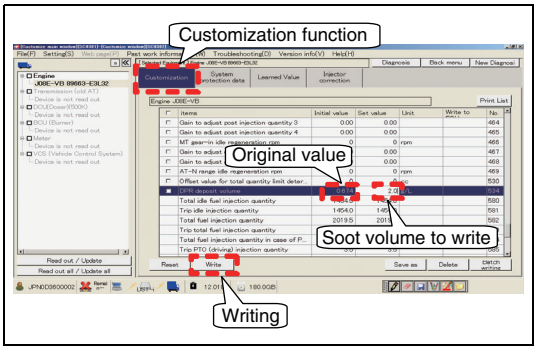


SAPH16F010300786

6. Turn the starter key "OFF" and then "ON" according to the instruction.
Then, click [OK].

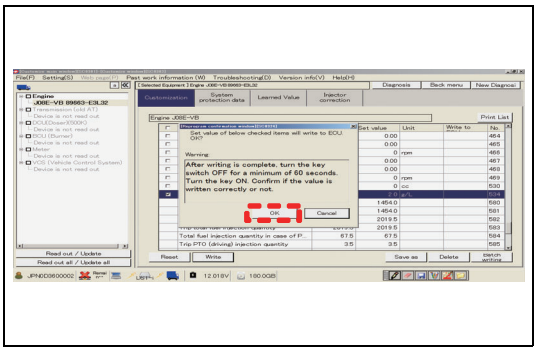

SAPH16F010300787

7. Check that ECU writing has been completed. Click [OK].
Refer to the window on the left.

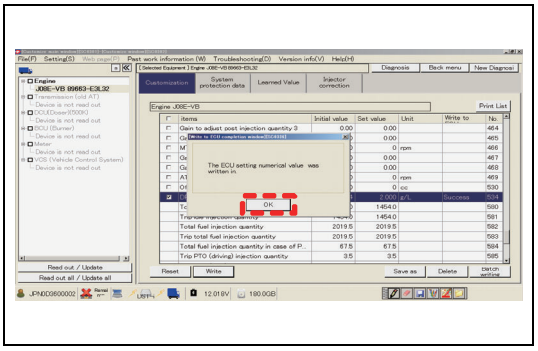

SAPH16F010300788

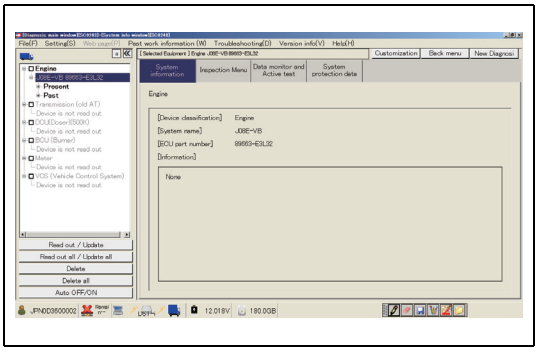

SAPH16F010300789

8. Start monitoring using the data monitoring function of DX II .
Check the output waveform of the NOx sensor on the monitor.

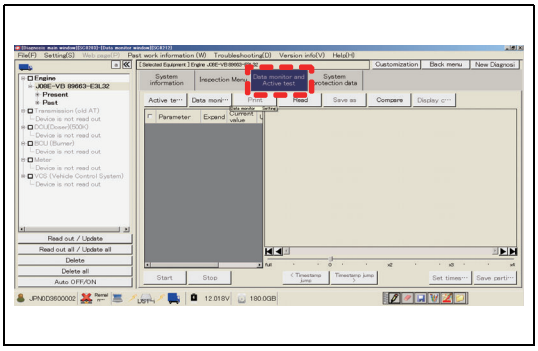

SAPH16F010300790

9. Select [Data monitor and Active test].

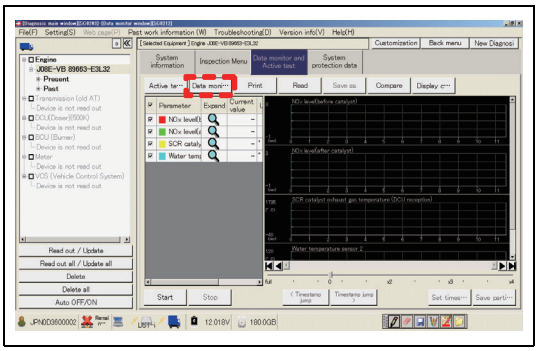

SAPH16F010300791

10. Select [Data monitor Setting].
Refer to the window on the left.

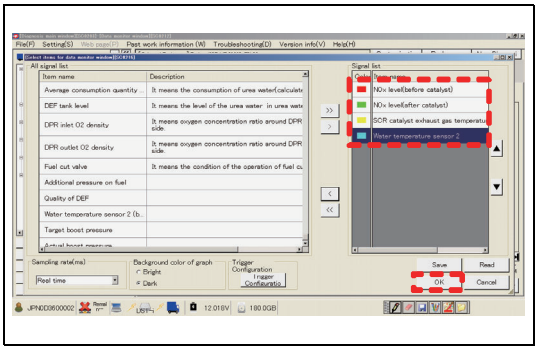

SAPH16F010300792

11. From the selection window on the left, select the following 4 items.
Click OK.

- NOx level (before catalyst)
- NOx level (after catalyst)
- SCR catalyst exhaust gas temperature (DCU reception)
- Water temperature sensor 2

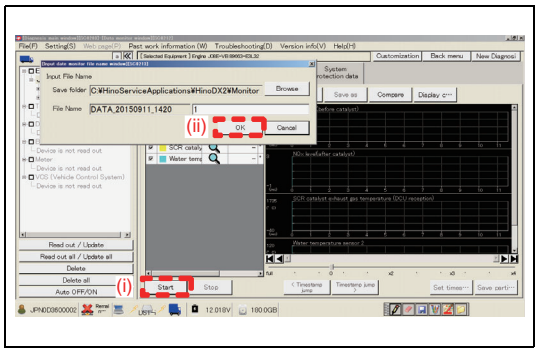


SAPH16F010300793

12. (i) Click [Start] to display the window to check the data storage destination.
    (ii) Click [OK] to start data monitoring.

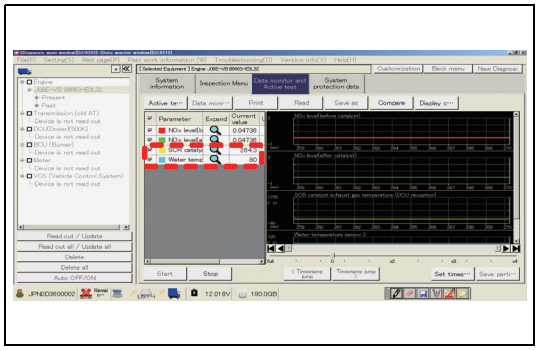

SAPH16F010300794

13. Start the engine.

14. Press the DPR manual regeneration switch of the vehicle.
    Start regeneration.

**HINT**

**Since NOx sensor waveform is not detected until the exhaust gas temperature and coolant temperature reach the specified values or more, perform DPR regeneration to increase the exhaust gas temperature and coolant temperature.**

15. On the DX II data monitor, monitor the SCR catalyst temperature, coolant temperature and NOx levels before and after.

16. When the SCR catalyst temperature reaches 250 °C {482 °F} and coolant temperature reaches 70 °C {158 °F}, press the DPR switch (button) to stop the regeneration.

17. Following the determination manual, determine the quality of the sensor according to the NOx sensor waveform data on the monitor.
    This is the end of the trouble shooting.

18. Turn the starter key OFF once to stop the engine. Turn it ON again.
19. After completing the trouble shooting, rewrite the soot volume to the original value.
    Select [Engine] as in the window on the left. Click the [Click] button.

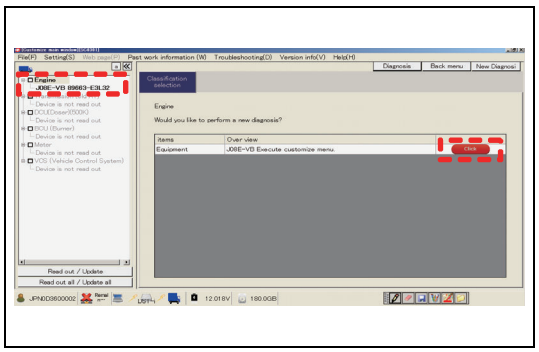

SAPH16F010300795

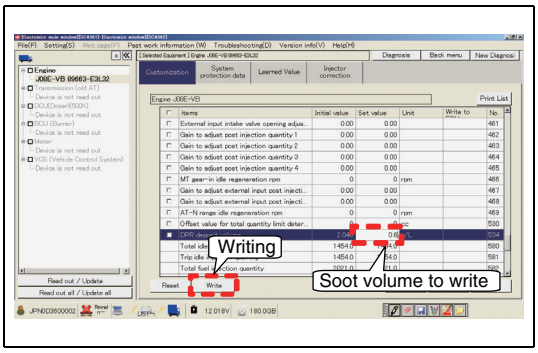


SAPH16F010300796

20. Rewrite the soot volume to the recorded original value.
Refer to the window on the left.
For the case of this window, the soot volume to write is [0.6].

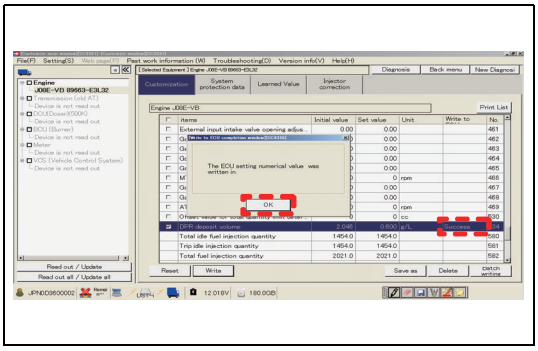

SAPH16F010300797

21. Check that the original soot volume has been written, and click [OK].
Refer to the window on the left.

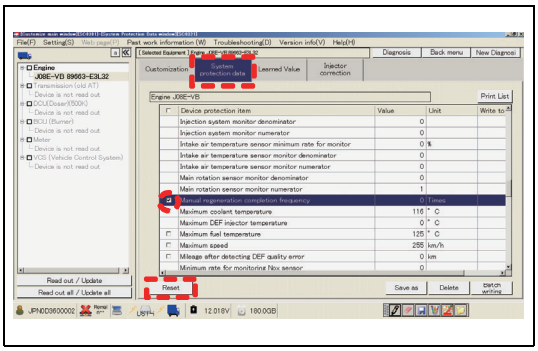

SAPH16F010300798

22. Select [System protection data] to check [Manual regeneration completion frequency]. Click [Reset]. Refer to the window on the left.

**NOTICE**
**Unless this memory reset is performed, the DTC of abnormal regeneration frequency would turn on.**

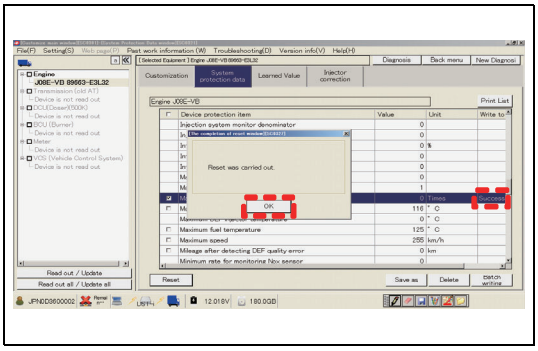

SAPH16F010300799

23. Check that the memory reset has been completed. Click [OK].
Refer to the window on the left.

**NOx controller operates properly?**

| YES | NO |
|---|---|
| **Go to step 5.** | **Replace NOx sensor 2 (SCR downstream) that does not operate properly.** |

| 5 | Inspect the DEF tank |
|---|---|

1. Remove the DEF tank from the vehicle.
2. Remove the DEF quality sensor from the DEF tank.
3. Drain the DEF solution from the DEF tank and check the tank interior for the presence of foreign substances.

**Was any failure found?**

| YES | NO |
|---|---|
| **Remove the foreign substances and clean the DEF tank interior.**<br>**⚠ CAUTION**<br>**Use fresh water or a diluted DEF solution to clean the DEF tank interior.**<br>**Perform "After-inspection work" of INFORMATION section.** | **Go to step 6.** |

| 6 | Check the DEF quality sensor |
|---|---|

1. Make sure there is no dirt or damage to the DEF quality sensor.

**Was any failure found?**

| YES | NO |
|---|---|
| **Clean the DEF quality sensor.**<br>**Go to step 6.** | **Go to step 7.** |

| 7 | Check the DTC detected (Engine ECU) [HINO DX II ] |
|---|---|

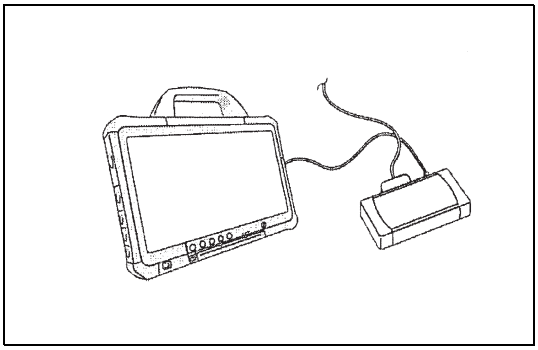

SAPH16F010300800

1. Temporarily install the DEF quality sensor in the DEF tank and mount the tank on the vehicle. (This makes it possible to connect the DEF quality sensor connector.)
2. Fill the tank with the standard concentration of DEF solution.
3. Perform "After-inspection work" of INFORMATION section.
4. Connect the vehicle to HINO DX II .
5. Set the starter switch to the "ON" position.
6. Select [Engine] and check if DTC P206B has been detected.

**Has DTC P206B been detected?**

**YES**

**Replace the DEF quality sensor.**
**Perform "After-inspection work" of INFORMATION section.**

**NO**

**Go to step 8.**

| 8 | Inspect the exhaust gas temperature sensor (SCR inlet) connector |
|---|---|

1. Check the connection of the exhaust gas temperature sensor (SCR inlet) connector (Looseness and poor contact).

**Was any failure found?**

**YES**

**Connect securely, repair if needed.**
**Go to step 9.**

**NO**

**Go to step 9.**

| 9 | Inspect the exhaust gas temperature sensor (SCR inlet) |
|---|---|

1. Check the installation of the exhaust gas temperature sensor (SCR inlet).
2. Make sure there is no dirt or damage to the exhaust gas temperature sensor (SCR inlet).

**Was any failure found?**

**YES**

**Clean the exhaust gas temperature sensor (SCR inlet) and install it properly. If damaged, replace the exhaust gas temperature sensor (SCR inlet).**
**Go to step 10.**

**NO**

**Go to step 10.**

| 10 | Inspect the exhaust gas temperature sensor (SCR inlet) unit |
|---|---|

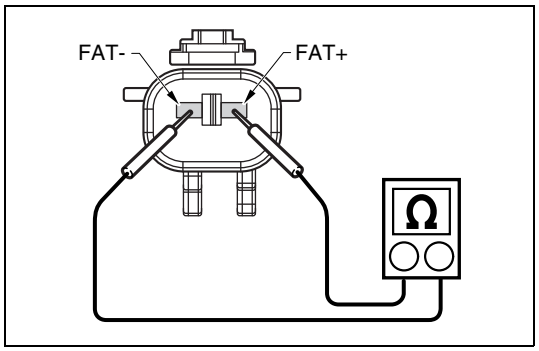

SAPH16F010300801

1. Set the starter switch to the "LOCK" position.
2. Disconnect the exhaust gas temperature sensor (SCR inlet) connector.
3. Use the electrical tester to measure the resistance between the terminals of the exhaust gas temperature sensor (SCR inlet).

| Measurement conditions | Tester connections | Standard values |
|---|---|---|
| Starter switch: LOCK | Exhaust gas temperature sensor (SCR inlet) FAT+ – FAT- | 20 °C {68 °F}: 220 Ω |

**Do the measurements meet the standard value?**

**YES**

**Go to step 11.**

**NO**

**Replace the exhaust gas temperature sensor (SCR inlet).**
**Go to step 11.**

| 11 | Inspect for short-circuit in the exhaust gas temperature sensor (SCR inlet) harness |
|---|---|

1. Disconnect the DCU 86P connector.
2. Connect the signal check harness and use the electrical tester to measure the resistance between the terminals of the DCU 86P vehicle-side connector and the ground.

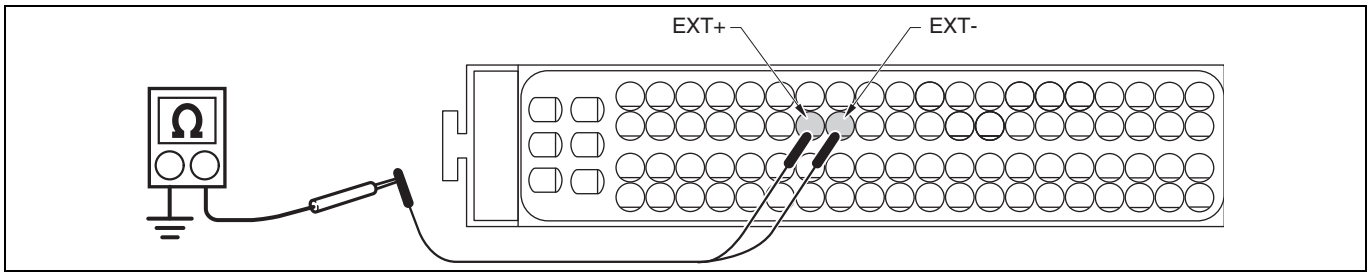


SAPH16F010300802

| Measurement conditions | Tester connections | Standard values |
|---|---|---|
| Starter switch: LOCK | DCU 86P vehicle-side connector<br>EXT+ – Ground<br>EXT- – Ground | ∞ Ω |

**Do the measurements meet the standard value?**

**YES**

**Go to step 12.**

**NO**

**Repair or replace the harness.**
**Go to step 12.**

| 12 | Inspect disconnection of the exhaust gas temperature sensor (SCR inlet) harness |
|---|---|

1. Connect the exhaust gas temperature sensor (SCR inlet) connector.
2. Connect the signal check harness and use the electrical tester to measure the resistance between the terminals of the DCU 86P vehicle-side connector.

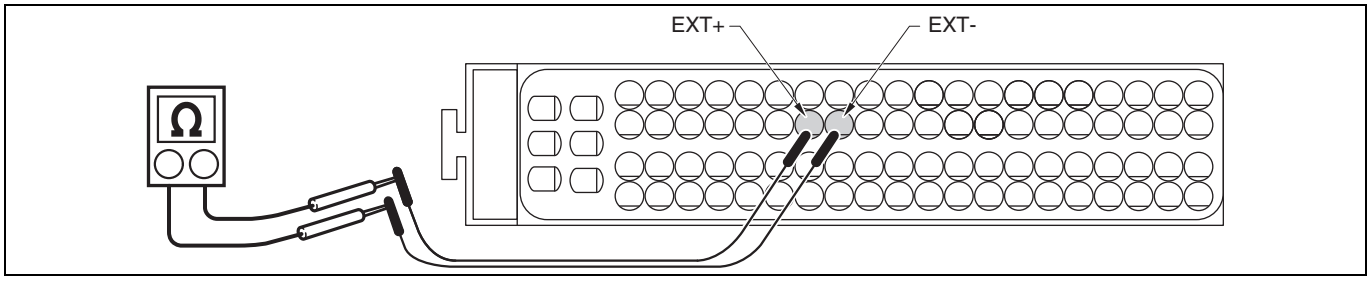


SAPH16F010300803

| Measurement conditions | Tester connections | Standard values |
|---|---|---|
| Starter switch: LOCK | DCU 86P vehicle-side connector EXT+ – EXT- | 20 °C {68 °F}: 220 Ω |

**Do the measurements meet the standard value?**

**YES**

**Go to step 13.**
**If any failure was found at the step 8 - 11, perform "After-inspection work" of INFORMATION section.**

**NO**

**Repair or replace the harness.**
**Perform "After-inspection work" of INFORMATION section.**

| 13 | Check the DEF pipe (pump ↔ injector) |
|---|---|

1. Check the DEF pipe (pressure line) and verify that there are no disconnections, clogging, corrosion, or cracks.

**Was any failure found?**

**YES**

**Repair or replace the faulty part.**
**Perform "After-inspection work" of INFORMATION section.**

**NO**

**Go to step 14.**

## 14 Inspect the DEF injector 1 [HINO DX II ]

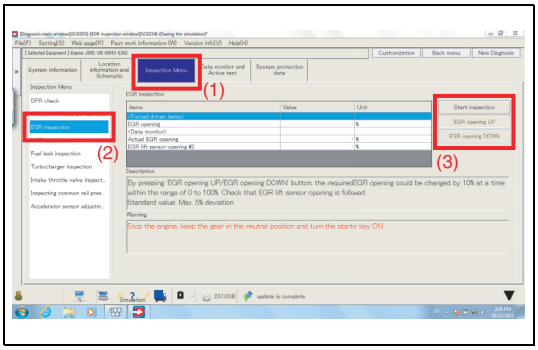


SAPH16F010300804

**NOTICE**
**Prepare a beaker or similar, plus a larger measuring vessel for measuring the DEF to be injected, before perform this inspection. (If the vessel is small, there is dispersion at the time of injection from the injector, and the measuring quantity decreases.)**

1. Set the starter switch to the "LOCK" position.
2. Remove the DEF injector from the muffler.

**HINT**
**Refer to the section "SELECTIVE CATALYTIC REDUCTION (SCR)" in the chapter "EMISSION CONTROL (J08E)" (S5-CJ08E14* or S5-UJ08E14*) for removal and installation of the DEF injector.**

3. Connect the vehicle to HINO DX II .
4. Set the starter switch to the "ON" position.
5. Select [DCU].
6. Select [Inspection Menu] on HINO DX II menu and check the operation of the DEF injector.

**NOTICE**
**When the DEF tank temperature is -5 °C (23 °F) or lower, perform warm-up to raise it to 10 °C (50 °F) or higher.**

<Inspection procedure>
(1) Select [Inspection Menu].
(2) Select [DEF solution addition test].
(3) Perform addition test as instructed on the HINO DX II screen. (Perform all three patterns)

**Is operation normal?**

**YES**

**Re-install the DEF injector on the muffler.**
**Go to step 16.**

**NO**

**Go to step 15.**

## 15 Inspect the DEF injector 2 [HINO DX II ]

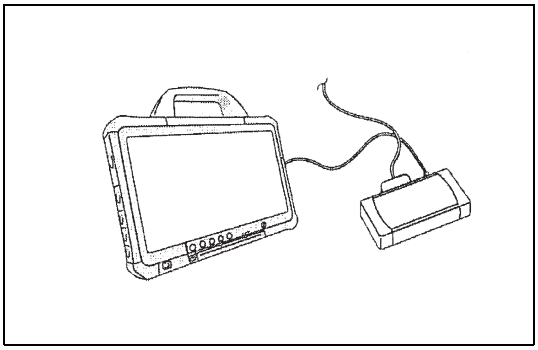

SAPH16F010300805

1. Set the starter switch to the "LOCK" position.
2. Replace the DEF injector with a new one. (Do not install it on the muffler.)
3. Set the starter switch to the "ON" position.
4. Perform DEF addition test as same as step 14.

**Is operation normal?**

**YES**

**Install the new injector on the muffler and complete the check.**
**After installing the injector, idle the engine (for about 10 min.) and on HINO DX II (Data Monitor) verify that the DEF solution is stable between 800 kPa {116 psi} and 1,051 kPa {152 psi}.**
**Perform "After-inspection work" of INFORMATION section.**

**NO**

**Re-install the DEF injector and replace the DEF pipe (pressure line).**
**After replacing the pipe, idle the engine (for about 10 min.) and on HINO DX II (Data Monitor) verify that the DEF solution is stable between 800 kPa {116 psi} and 1,051 kPa {152 psi}.**
**Perform "After-inspection work" of INFORMATION section.**

**16 Inspect the air flow sensor connector**

1. Check the connection of the air flow sensor connector (Looseness and poor contact).

**Was any failure found?**

**YES**

**Connect securely, repair if needed.**
**Go to step 17.**

**NO**

**Go to step 17.**

**17 Inspect the air flow sensor**

1. Check the installation of the air flow sensor.
2. Make sure there is no dirt or damage to the air flow sensor.

**Was any failure found?**

**YES**

**If dirt, clogging or damage was found in sensing unit, replace the air flow sensor.**
**Go to step 18.**

**NO**

**Go to step 18.**

## 18 Inspect for short-circuit of the air flow sensor harness

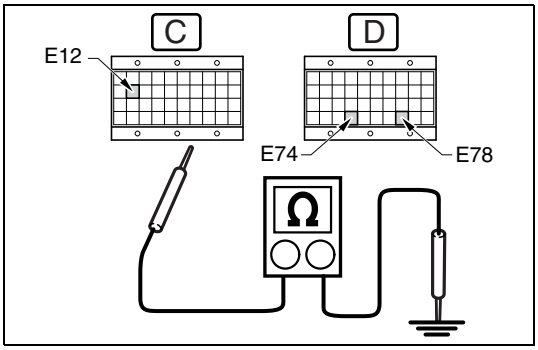

SAPH16F010300806

1. Set the starter switch to the "LOCK" position.
2. Connect the signal check harness to the engine ECU vehicle-side harness. (Do not connect the harness to the ECU.)
3. Disconnect the air flow sensor connector.
4. Use the electrical tester to measure the resistance between the terminals of the engine ECU (signal check harness) and ground.

| Measurement conditions | Tester connections | Standard values |
|---|---|---|
| **Starter switch: LOCK** | **Engine ECU (signal check harness) AFSI(E74) – Ground AG4(E78) – Ground AFVB(E12) – Ground** | **∞ Ω** |

**Do the measurements meet the standard value?**

**YES**

**Go to step 19.**

**NO**

**Repair or replace the harness.**
**Go to step 19.**

## 19 Inspect disconnection of the air flow sensor harness

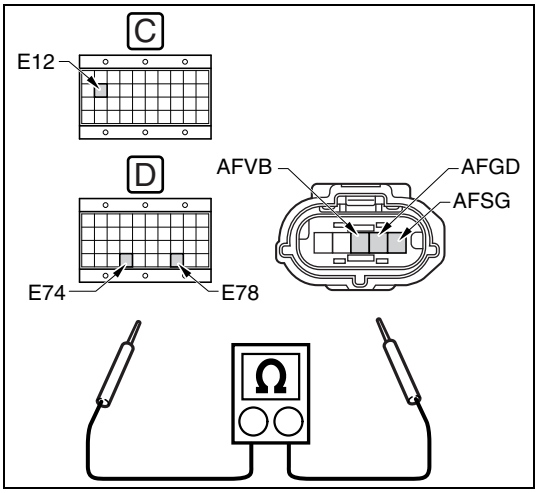

SAPH16F010300807

1. Use the electrical tester to measure the resistance between the terminals of the engine ECU (signal check harness) and air flow sensor vehicle-side connector.

| Measurement conditions | Tester connections | Standard values |
|---|---|---|
| **Starter switch: LOCK** | **Engine ECU (signal check harness) – Air flow sensor vehicle-side connector AFSI(E74) – AFSG AG4(E78) – AFGD AFVB(E12) – AFVB** | **1 Ω or less** |

**Do the measurements meet the standard value?**

**YES**

**Go to step 20.**

**NO**

**Repair or replace the harness.**
**Go to step 20.**

## 20 Inspect the air flow sensor power supply

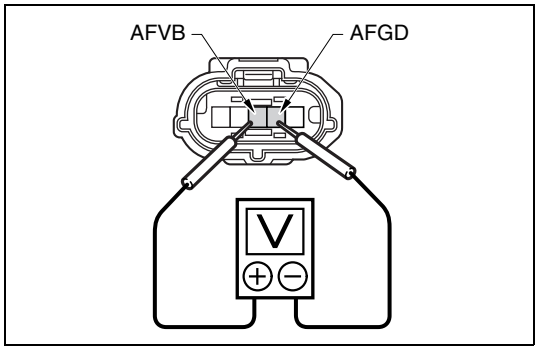

SAPH16F010300808

1. Connect the signal check harness to the engine ECU.
2. Set the starter switch to the "ON" position.
3. Use the electrical tester to measure the voltage between the terminals of the air flow sensor vehicle-side connector.

| Measurement conditions | Tester connections | Standard values |
|---|---|---|
| Starter switch: ON | Air flow sensor vehicle-side connector AFVB – AFGD | 4.5 – 5.5 V |

**Do the measurements meet the standard value?**

**YES**

**Go to step 21.**

**NO**

**Replace the engine ECU.**
**Go to step 21.**

## 21 Inspect the air flow sensor signal

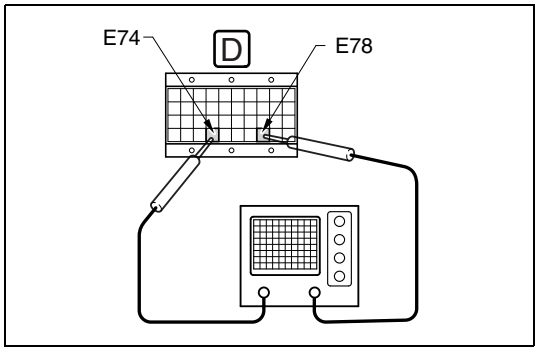

SAPH16F010300809

1. Set the starter switch to the "LOCK" position.
2. Connect the air flow sensor connector.
3. Start the engine.
4. Use the oscilloscope to measure the signal voltage between the terminals in the engine ECU (signal check harness).

| Measurement conditions | Tester connections | Standard values |
|---|---|---|
| After engine warm-up, with engine idling | Engine ECU (signal check harness) AFSI(E74) – AG4(E78) | 5 – 6 kHz |

**Do the measurements meet the standard value?**

YES

**Go to step 22.**
**If any failure was found at the step 16 - 20, perform "After-inspection work" of INFORMATION section.**

NO

**Replace the air flow sensor.**
**Perform "After-inspection work" of INFORMATION section.**

| 22 | Perform a basic engine check |
|---|---|

1. Perform a basic engine check using the ENGINE BASIC INSPECTION SHEET (ENGINE INSPECTION CHECK SHEET).

**Was any failure found?**

YES

**Repair or replace the faulty part.**
**Perform "After-inspection work" of INFORMATION section.**

NO

**Go to step 23.**

| 23 | Inspect the exhaust pipe |
|---|---|

1. Make sure there is no soot leakage from the exhaust pipe outlet.

**Was any failure found?**

YES

**Replace the DPR filter and the PM sensor.**
**After replacing the filter, execute a DPR manual regeneration and check if no DTC (P206B) is detected.**
**Perform "After-inspection work" of INFORMATION section.**

NO

**Go to step 24.**

| 24 | Inspect the SCR catalyst [HINO DX II ] |
|---|---|

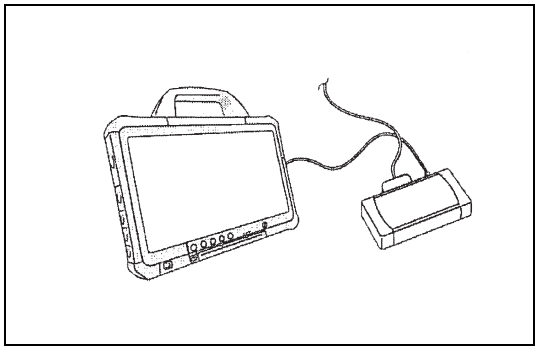

SAPH16F010300810

1. Set the starter switch to the "LOCK" position.
2. Replace the SCR catalyst.
3. Set the starter switch to the "ON" position.
4. Erase the trouble history.
5. Form the DTC detection condition.
6. Select [Engine] and check if P206B has been detected.

**Has DTC P206B been detected?**

**YES**

**Replace the engine ECU.**
**Perform "After-inspection work" of INFORMATION section.**

**NO**

**Procedure completed. (SCR catalyst is faulty.)**
**Perform "After-inspection work" of INFORMATION section.**

# DTC: P207F

EN01H16F01030F03001139

## P207F: Improper reductant

INFORMATION

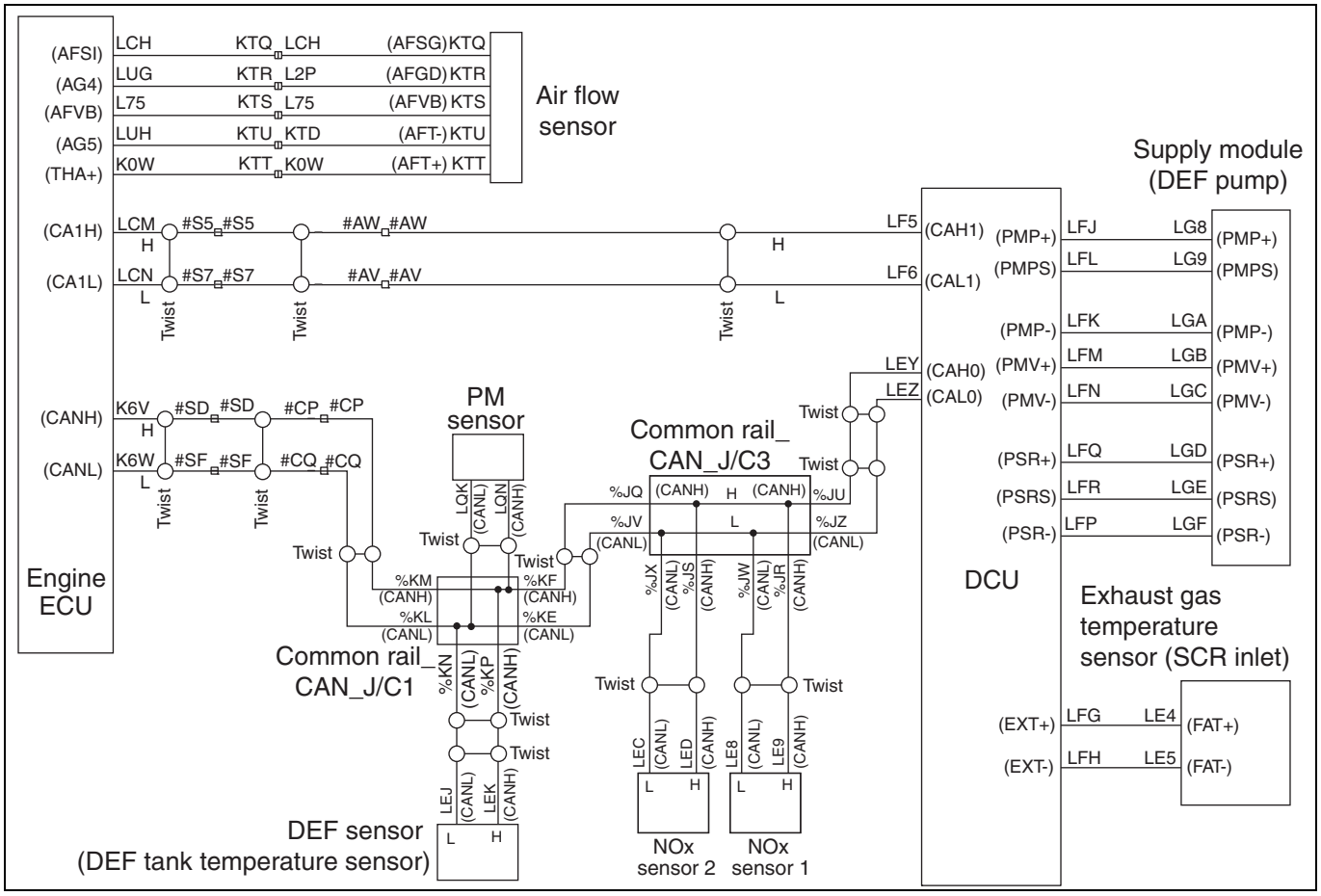


SAPH16F010300811

### 1. Technical description

- Deterioration of SCR catalyst is determined by a decision of a drop in the NOx conversion efficiency and the DEF concentration.
- Conversion efficiency is calculated by upstream and downstream NOx sensors.
- Besides other factors, conversion efficiency may drop due to the increase or decrease of DEF amount supplied to the sensing unit.
- DEF SCR catalyst concentration is measured by a DEF quality sensor.

**<Description of malfunction>**

- Poor DEF solution is detected.

### 2. DTC set condition

(1) DTC detection condition

a. Conditions below continue for 5 seconds.
1,000 r/min ≤ Engine speed ≤ 2,500 r/min
Engine speed ≥ 300 r/min for 3 seconds.
30 $mm^3$/st. cyl. ≤ Fuel injection quantity < 150 $mm^3$/st. cyl.
300 kg/h ≤ Exhaust gas mass flow < 1,000 kg/h
210 °C {410 °F} ≤ SCR catalyst temperature < 260 °C {500 °F}
50 ppm ≤ NOx (SCR upstream) < 1,000 ppm
Intake air temperature > -20 °C {-4 °F}
60 % ≤ Ratio of actual $NH_3$ load < 120 %

Calculated HC load < 0.1 g
NOx sensor 1 (SCR upstream) and NOx sensor 2 (SCR downstream) are valid for 121 seconds.
DPF active regeneration not in process.

b. Conditions below continue for 10 seconds.
DEF defrosting completed (DEF take temperature ≥ -5 °C {23 °F})
Exhaust gas temperature (SCR inlet) > 150 °C {302 °F}
Engine speed ≥ 350 r/min
Vehicle speed > 6.2 mph
11 V < Battery voltage < 32 V
DEF quality sensor is valid.

(2) Judgment criteria
The conditions described below are formed.

a. Calculate Average NOx conversion efficiency from NOx sensor 1 (upstream) and 2 (downstream).
Target NOx conversion efficiency (from DCU) - Average NOx conversion efficiency ≥ 0.99

b. Average DEF concentration ≤ 16 %

**3. Reset condition**

- Immediately after normal operation is restored and SCR-related memory is reset.

**4. Indication, warning or system control regulation when the DTC is set.**

- MIL: ON
- SVS light: ON (Poor DEF quality light)
- Engine output is restricted.
- Vehicle speed is restricted.

**5. Symptoms on the vehicle when the DTC is set**

**<Symptoms on the vehicle due to backup control (fail safe function)>**

- Engine output is insufficient.
- Vehicle does not speed up.

**<Symptoms on the vehicle due to malfunction>**

- –

**6. Pre-inspection work**

- Check that the battery voltage is in the normal range.

**7. After-inspection work**

- Clear all past DTCs.
- Form the DTC detection condition.
- Check that no DTC is detected after test drive.

**8. Estimated failure factors**

- Faulty DEF solution reduction
- Harness disconnection or short-circuit
- NOx sensor failure
- Air flow sensor failure
- Exhaust gas temperature sensor (SCR inlet) failure
- DEF quality sensor failure
- SCR catalyst: miscalculation of adsorption amount or HC poisoning

**NOTICE**
**If no trouble causes are found , it can be suspected that the respective DTC was issued because of a temporary fault condition caused by the freezing of the DEF.**

## INSPECTION PROCEDURE: P207F

| 1 | Check the DTC detected [HINO DX II ] |
|---|---|

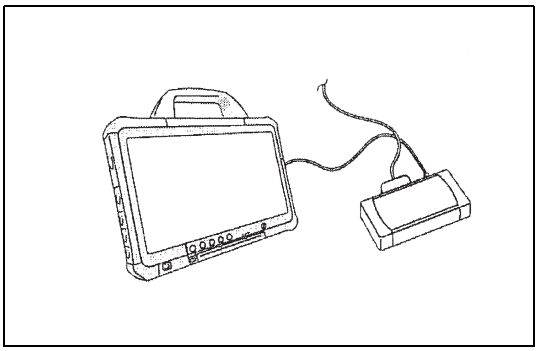

SAPH16F010300812

1. Set the starter switch to the "LOCK" position.
2. Connect the diagnostic system (HINO DX II ) to the vehicle.
3. Set the starter switch to the "ON" position.
4. Select [Engine] on the screen of HINO DX II and check it the DTC P207F has been detected.

**Has any DTC related to P207F been detected?**

**YES**

**Go to diagnosis procedure of the related DTC.**
**After repair, go to step 2.**

**NO**

**Go to step 2.**

| 2 | Check the DEF solution |
|---|---|

1. Check the DEF solution concentration.

| Standard values |
|---|
| 32.5 ± 2.5 % |

**Do the measurements meet the standard value?**

**YES**

**Go to step 3.**

**NO**

**Replace the DEF solution.**
**If the DEF concentration is below the standard, drain the DEF solution through the tank drain with the starter switch ON, and then refill the tank with at least 5 liters {1.3 gallons} of DEF. Afterward, drive the vehicle and confirm that the problem does not recur under driving conditions.**
**Perform "After-inspection work" of INFORMATION section.**

| 3 | Inspect the NOx sensor No.1 (SCR upstream) [HINO DX II ] |
|---|---|

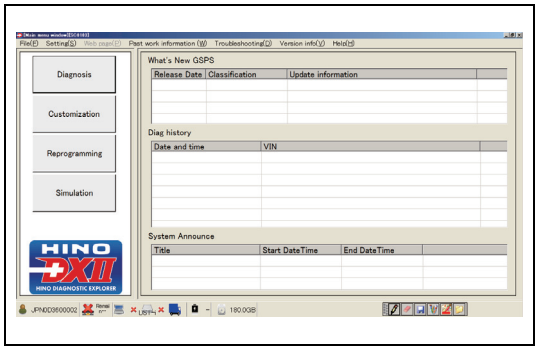


SAPH16F010300813

1. Turn the starter key to the "ON" position.

2. Start DX II .

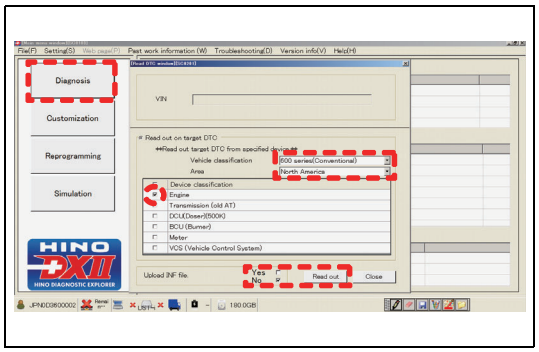


SAPH16F010300814

3. On the DX II window, click [Diagnosis].
Select the vehicle model and region, and check [Engine].
Select either Upload INF file and then [Read out] to read out.

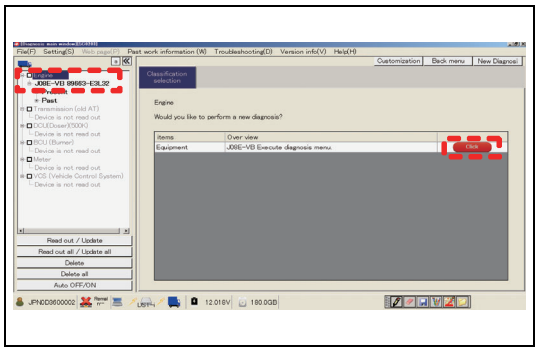


SAPH16F010300815

4. Select [Engine], and press the click button.

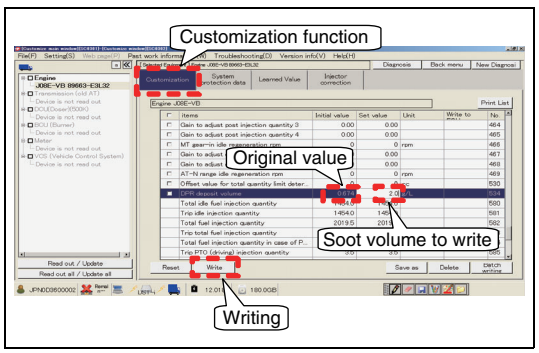


SAPH16F010300816

5. Writing soot volume

**HINT**

**As in the window on the left, write a soot volume [2.0] using the customization function. Record the original value not to forget. The example in the window is [0.674].**

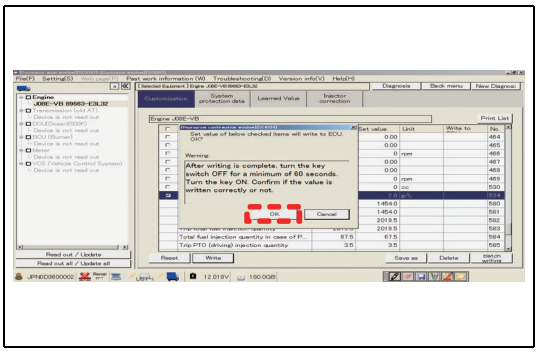


SAPH16F010300817

6. Turn the starter key "OFF" and then "ON" according to the instruction.
Then, click [OK].

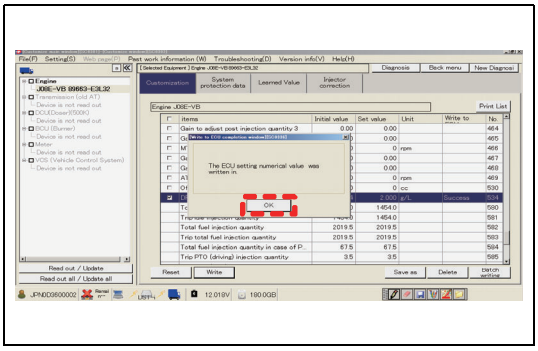


SAPH16F010300818

7. Check that ECU writing has been completed. Click [OK].
Refer to the window on the left.

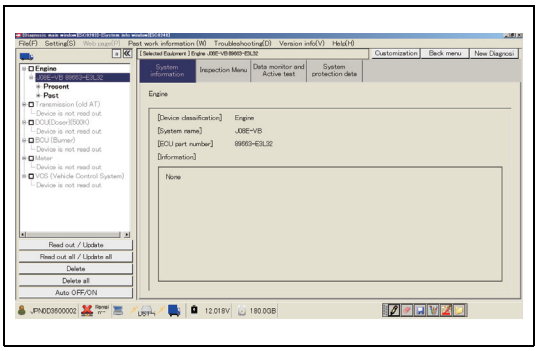

SAPH16F010300819

8. Start monitoring using the data monitoring function of DX II .
Check the output waveform of the NOx sensor on the monitor.

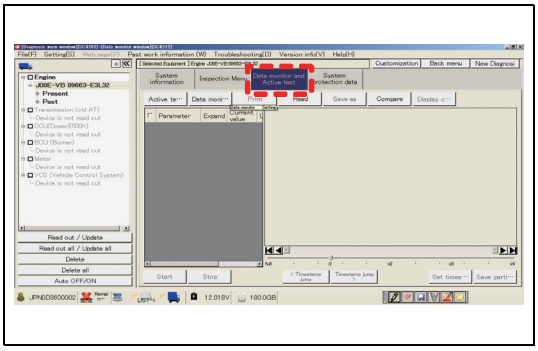

SAPH16F010300820

9. Select [Data monitor and Active test].

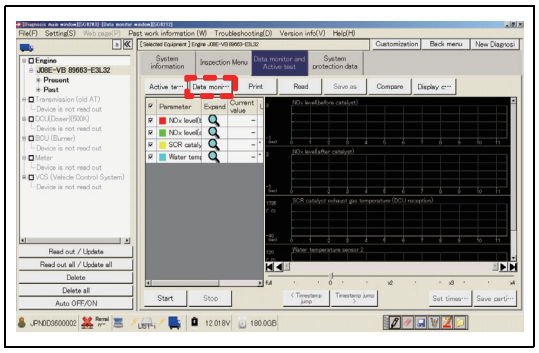

SAPH16F010300821

10. Select [Data monitor Setting].
Refer to the window on the left.

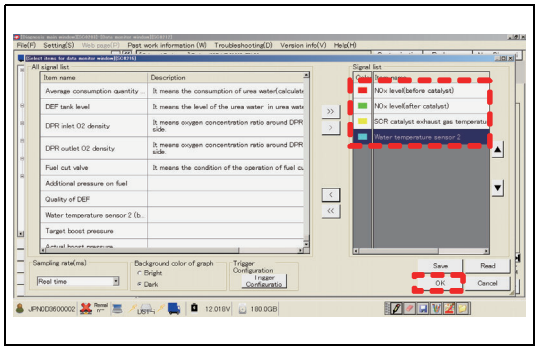

SAPH16F010300822

11. From the selection window on the left, select the following 4 items.
Click OK.

- NOx level (before catalyst)
- NOx level (after catalyst)
- SCR catalyst exhaust gas temperature (DCU reception)
- Water temperature sensor 2

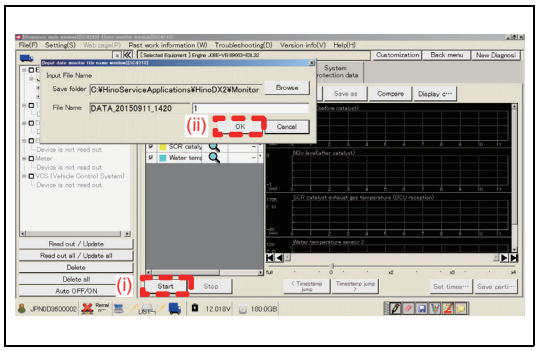

SAPH16F010300823

12. (i) Click [Start] to display the window to check the data storage destination.
(ii) Click [OK] to start data monitoring.

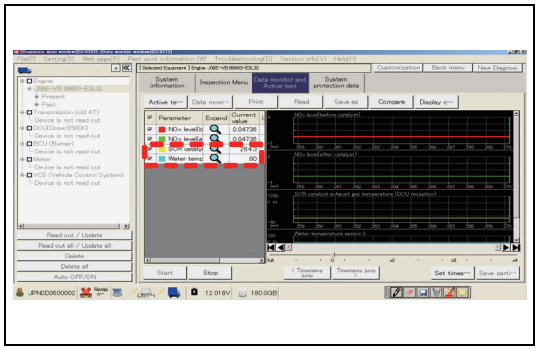

SAPH16F010300824

13. Start the engine.

14. Press the DPR manual regeneration switch of the vehicle.
Start regeneration.

**HINT**

**Since NOx sensor waveform is not detected until the exhaust gas temperature and coolant temperature reach the specified values or more, perform DPR regeneration to increase the exhaust gas temperature and coolant temperature.**

15. On the DX II data monitor, monitor the SCR catalyst temperature, coolant temperature and NOx levels before and after.

16. When the SCR catalyst temperature reaches 250 °C {482 °F} and coolant temperature reaches 70 °C {158 °F}, press the DPR switch (button) to stop the regeneration.

17. Following the determination manual, determine the quality of the sensor according to the NOx sensor waveform data on the monitor.
This is the end of the trouble shooting.

18. Turn the starter key OFF once to stop the engine. Turn it ON again.
19. After completing the trouble shooting, rewrite the soot volume to the original value.
    Select [Engine] as in the window on the left. Click the [Click] button.

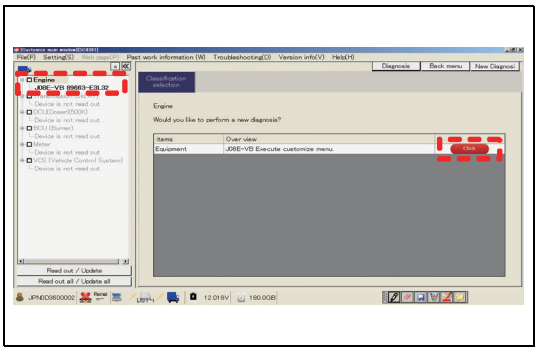

SAPH16F010300825

20. Rewrite the soot volume to the recorded original value.
    Refer to the window on the left.
    For the case of this window, the soot volume to write is [0.6].

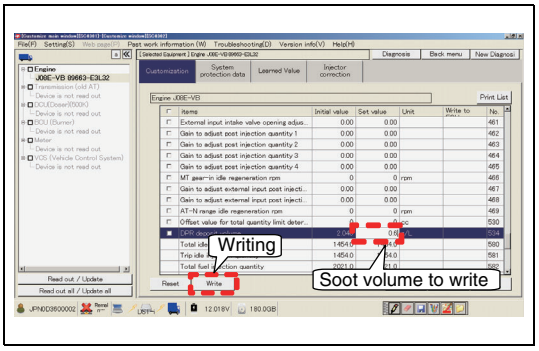


SAPH16F010300826

21. Check that the original soot volume has been written, and click [OK].
    Refer to the window on the left.

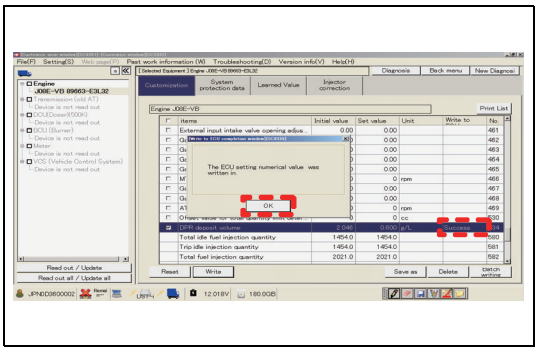

SAPH16F010300827

22. Select [System protection data] to check [Manual regeneration completion frequency]. Click [Reset]. Refer to the window on the left.

**NOTICE**

**Unless this memory reset is performed, the DTC of abnormal regeneration frequency would turn on.**

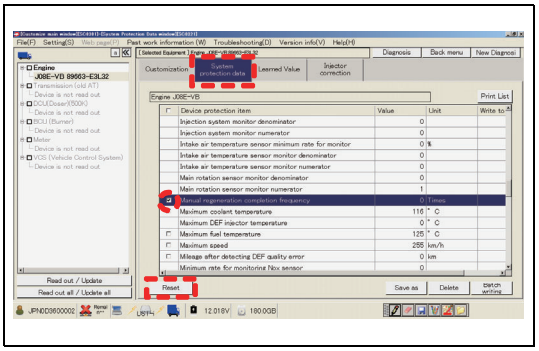

SAPH16F010300828

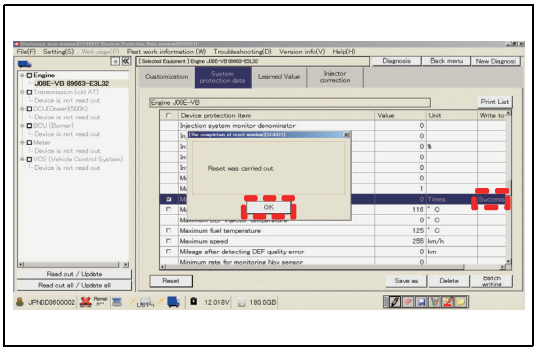

SAPH16F010300829

23. Check that the memory reset has been completed. Click [OK].
Refer to the window on the left.

**NOx controller operates properly?**

**YES**

**Go to step 4.**

**NO**

**Replace NOx sensor 1 (SCR downstream) that does not operate properly.**

## 4 Inspect the NOx sensor No.2 (SCR downstream) [HINO DX II ]

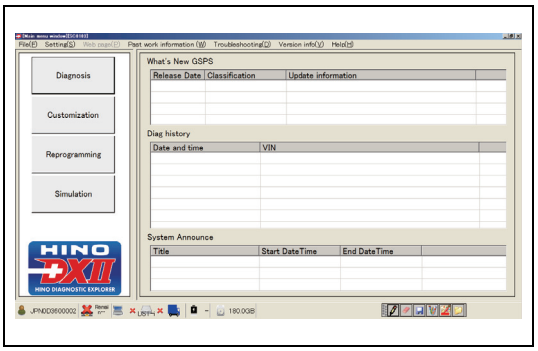


SAPH16F010300830

1. Turn the starter key to the "ON" position.

2. Start DX II .

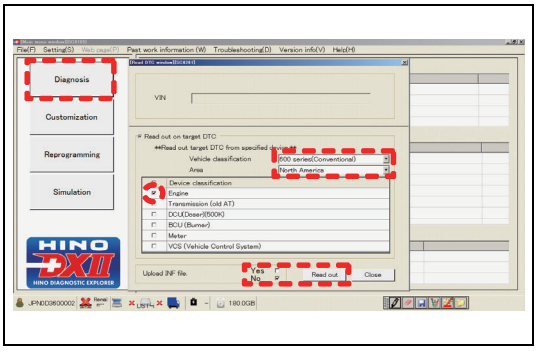


SAPH16F010300831

3. On the DX II window, click [Diagnosis].
Select the vehicle model and region, and check [Engine].
Select either Upload INF file and then [Read out] to read out.

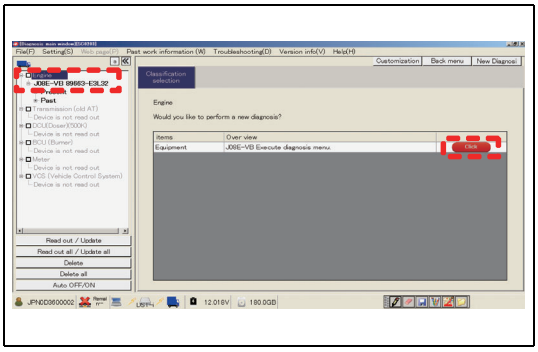

SAPH16F010300832

4. Select [Engine], and press the click button.

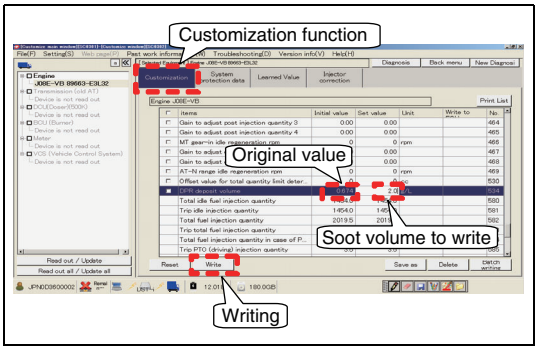


SAPH16F010300833

5. Writing soot volume

**HINT**

**As in the window on the left, write a soot volume [2.0] using the customization function. Record the original value not to forget. The example in the window is [0.674].**

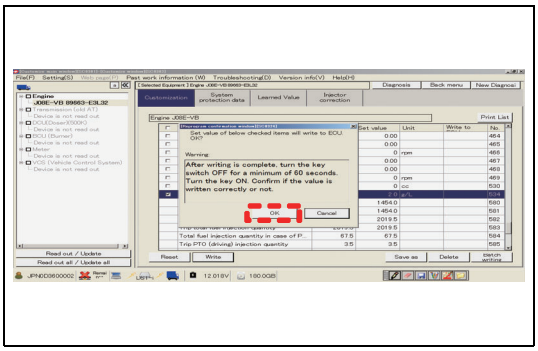

SAPH16F010300834

6. Turn the starter key "OFF" and then "ON" according to the instruction.
Then, click [OK].

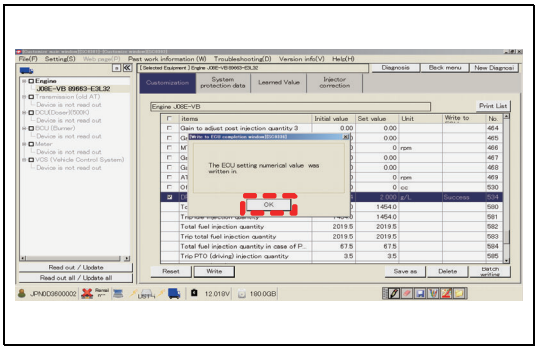

SAPH16F010300835

7. Check that ECU writing has been completed. Click [OK].
Refer to the window on the left.

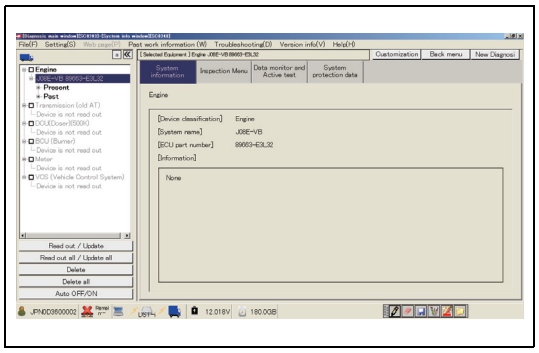

SAPH16F010300836

8. Start monitoring using the data monitoring function of DX II . Check the output waveform of the NOx sensor on the monitor.

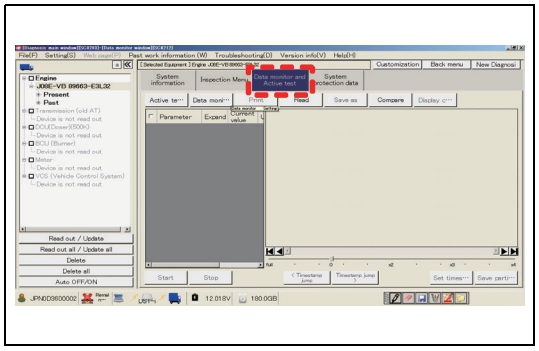

SAPH16F010300837

9. Select [Data monitor and Active test].

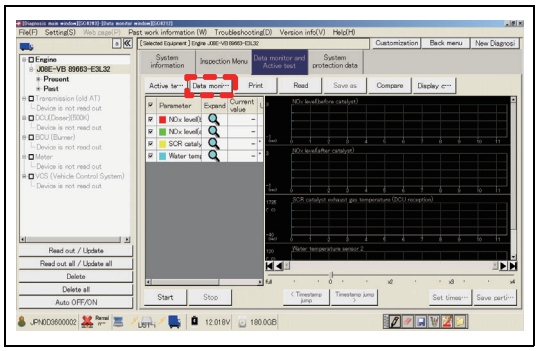

SAPH16F010300838

10. Select [Data monitor Setting]. Refer to the window on the left.

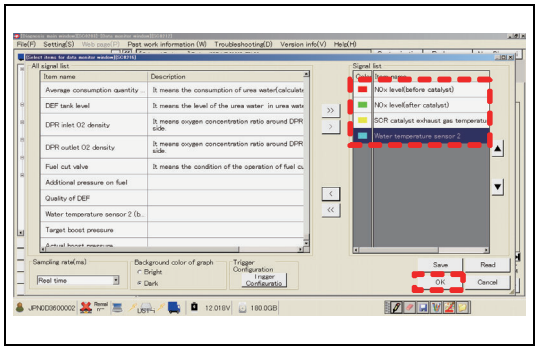

SAPH16F010300839

11. From the selection window on the left, select the following 4 items. Click OK.

- NOx level (before catalyst)
- NOx level (after catalyst)
- SCR catalyst exhaust gas temperature (DCU reception)
- Water temperature sensor 2

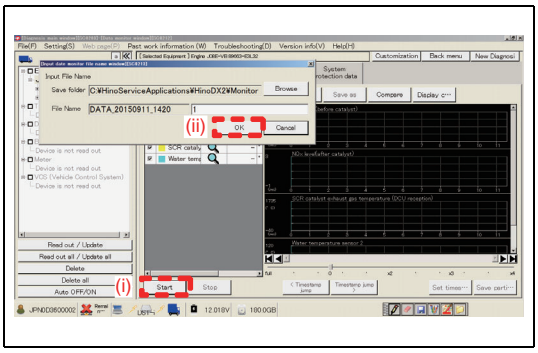


SAPH16F010300840

12. (i) Click [Start] to display the window to check the data storage destination.
    (ii) Click [OK] to start data monitoring.

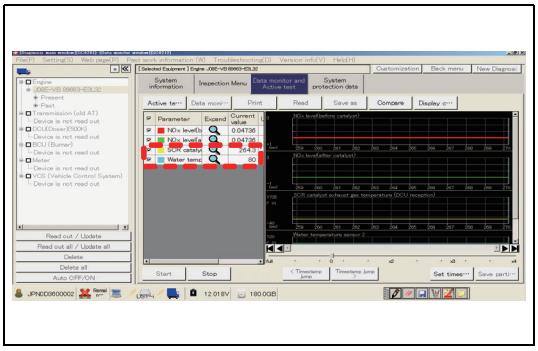

SAPH16F010300841

13. Start the engine.

14. Press the DPR manual regeneration switch of the vehicle.
    Start regeneration.

**HINT**

**Since NOx sensor waveform is not detected until the exhaust gas temperature and coolant temperature reach the specified values or more, perform DPR regeneration to increase the exhaust gas temperature and coolant temperature.**

15. On the DX II data monitor, monitor the SCR catalyst temperature, coolant temperature and NOx levels before and after.

16. When the SCR catalyst temperature reaches 250 °C {482 °F} and coolant temperature reaches 70 °C {158 °F}, press the DPR switch (button) to stop the regeneration.

17. Following the determination manual, determine the quality of the sensor according to the NOx sensor waveform data on the monitor.
    This is the end of the trouble shooting.

18. Turn the starter key OFF once to stop the engine. Turn it ON again.
19. After completing the trouble shooting, rewrite the soot volume to the original value.
    Select [Engine] as in the window on the left. Click the [Click] button.

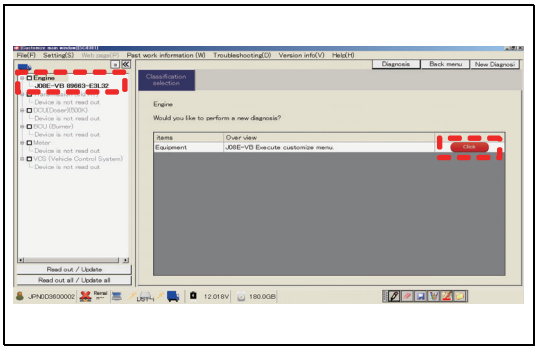

SAPH16F010300842

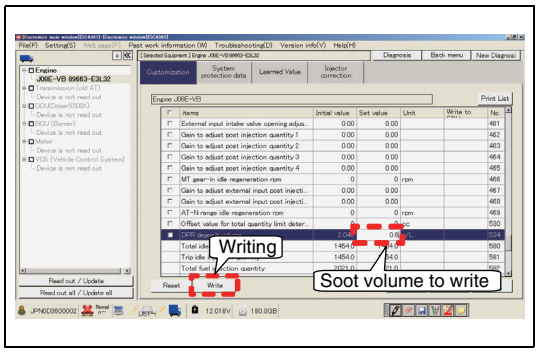


SAPH16F010300843

20. Rewrite the soot volume to the recorded original value.
Refer to the window on the left.
For the case of this window, the soot volume to write is [0.6].

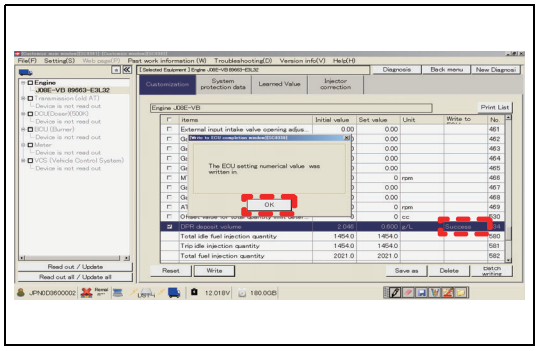

SAPH16F010300844

21. Check that the original soot volume has been written, and click [OK].
Refer to the window on the left.

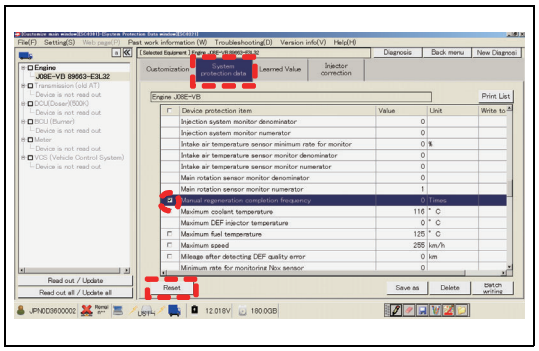

SAPH16F010300845

22. Select [System protection data] to check [Manual regeneration completion frequency]. Click [Reset]. Refer to the window on the left.

**NOTICE**

**Unless this memory reset is performed, the DTC of abnormal regeneration frequency would turn on.**

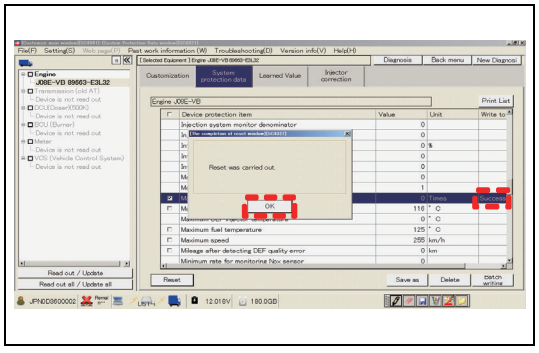

SAPH16F010300846

23. Check that the memory reset has been completed. Click [OK].
Refer to the window on the left.

**NOx controller operates properly?**

YES

**Go to step 5.**

NO

**Replace NOx sensor 2 (SCR downstream) that does not operate properly.**

| 5 | Inspect the DEF tank |
|---|---|

1. Remove the DEF tank from the vehicle.
2. Remove the DEF quality sensor from the DEF tank.
3. Drain the DEF solution from the DEF tank and check the tank interior for the presence of foreign substances.

**Was any failure found?**

YES

**Remove the foreign substances and clean the DEF tank interior.**

**⚠ CAUTION**
**Use fresh water or a diluted DEF solution to clean the DEF tank interior.**

**Perform "After-inspection work" of INFORMATION section.**

NO

**Go to step 6.**

| 6 | Check the DEF quality sensor |
|---|---|

1. Make sure there is no dirt or damage to the DEF quality sensor.

**Was any failure found?**

YES

**Clean the DEF quality sensor.**
**Go to step 6.**

NO

**Go to step 7.**

| 7 | Check the DTC detected (Engine ECU) [HINO DX ll ] |
|---|---|

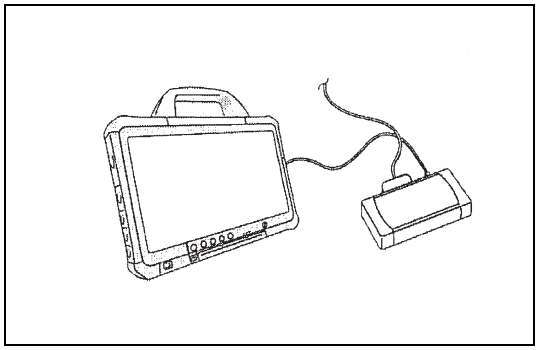

SAPH16F010300847

1. Temporarily install the DEF quality sensor in the DEF tank and mount the tank on the vehicle. (This makes it possible to connect the DEF quality sensor connector.)
2. Fill the tank with the standard concentration of DEF solution.
3. Perform "After-inspection work" of INFORMATION section.
4. Connect the vehicle to HINO DX II .
5. Set the starter switch to the "ON" position.
6. Select [Engine] and check if DTC P207F has been detected.

**Has DTC P207F been detected?**

**YES**

**Replace the DEF quality sensor.**
**Perform "After-inspection work" of INFORMATION section.**

**NO**

**Go to step 8.**

| 8 | Inspect the exhaust gas temperature sensor (SCR inlet) connector |
|---|---|

1. Check the connection of the exhaust gas temperature sensor (SCR inlet) connector (Looseness and poor contact).

**Was any failure found?**

**YES**

**Connect securely, repair if needed.**
**Go to step 9.**

**NO**

**Go to step 9.**

| 9 | Inspect the exhaust gas temperature sensor (SCR inlet) |
|---|---|

1. Check the installation of the exhaust gas temperature sensor (SCR inlet).
2. Make sure there is no dirt or damage to the exhaust gas temperature sensor (SCR inlet).

**Was any failure found?**

| YES | NO |
|---|---|
| **Clean the exhaust gas temperature sensor (SCR inlet) and install it properly. If damaged, replace the exhaust gas temperature sensor (SCR inlet).<br>Go to step 10.** | **Go to step 10.** |

| 10 | Inspect the exhaust gas temperature sensor (SCR inlet) unit |
|---|---|

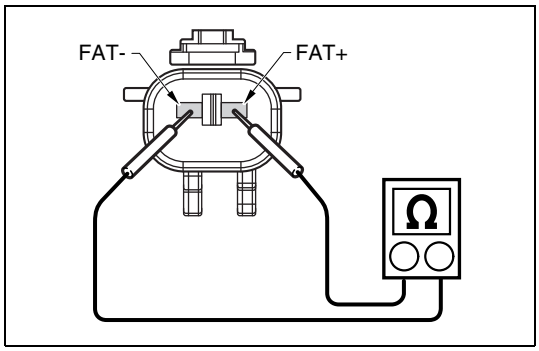

SAPH16F010300848

1. Set the starter switch to the "LOCK" position.
2. Disconnect the exhaust gas temperature sensor (SCR inlet) connector.
3. Use the electrical tester to measure the resistance between the terminals of the exhaust gas temperature sensor (SCR inlet).

| Measurement conditions | Tester connections | Standard values |
|---|---|---|
| **Starter switch: LOCK** | **Exhaust gas temperature sensor (SCR inlet) FAT+ – FAT-** | **20 °C {68 °F}: 220 Ω** |

**Do the measurements meet the standard value?**

| YES | NO |
|---|---|
| **Go to step 11.** | **Replace the exhaust gas temperature sensor (SCR inlet).<br>Go to step 11.** |

| 11 | Inspect for short-circuit in the exhaust gas temperature sensor (SCR inlet) harness |
|---|---|

1. Disconnect the DCU 86P connector.
2. Connect the signal check harness and use the electrical tester to measure the resistance between the terminals of the DCU 86P vehicle-side connector and the ground.

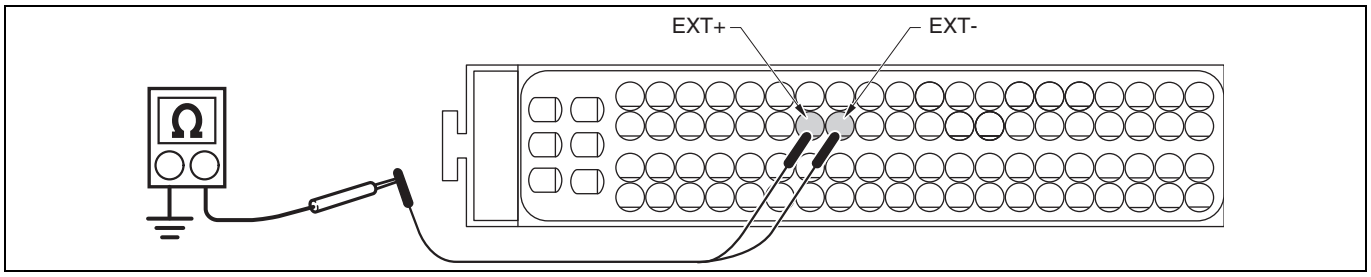


SAPH16F010300849

| Measurement conditions | Tester connections | Standard values |
|---|---|---|
| Starter switch: LOCK | DCU 86P vehicle-side connector<br>EXT+ – Ground<br>EXT- – Ground | ∞ Ω |

**Do the measurements meet the standard value?**

**YES**

**Go to step 12.**

**NO**

**Repair or replace the harness.**
**Go to step 12.**

| 12 | Inspect disconnection of the exhaust gas temperature sensor (SCR inlet) harness |
|---|---|

1. Connect the exhaust gas temperature sensor (SCR inlet) connector.
2. Connect the signal check harness and use the electrical tester to measure the resistance between the terminals of the DCU 86P vehicle-side connector.

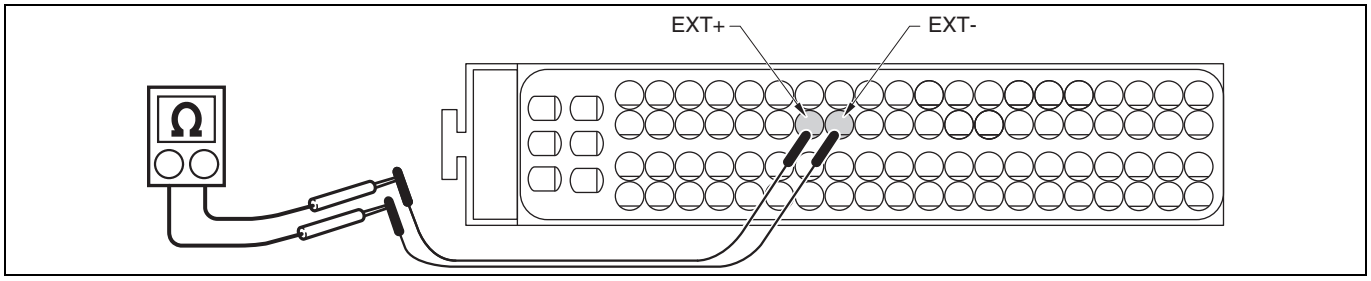


SAPH16F010300850

| Measurement conditions | Tester connections | Standard values |
|---|---|---|
| Starter switch: LOCK | DCU 86P vehicle-side connector EXT+ – EXT- | 20 °C {68 °F}: 220 Ω |

**Do the measurements meet the standard value?**

**YES**

**Go to step 13.**
**If any failure was found at the step 8 - 11, perform "After-inspection work" of INFORMATION section.**

**NO**

**Repair or replace the harness.**
**Perform "After-inspection work" of INFORMATION section.**

| 13 | Check the DEF pipe (pump ↔ injector) |
|---|---|

1. Check the DEF pipe (pressure line) and verify that there are no disconnections, clogging, corrosion, or cracks.

**Was any failure found?**

**YES**

**Repair or replace the faulty part.**
**Perform "After-inspection work" of INFORMATION section.**

**NO**

**Go to step 14.**

## 14 Inspect the DEF injector 1 [HINO DX II ]

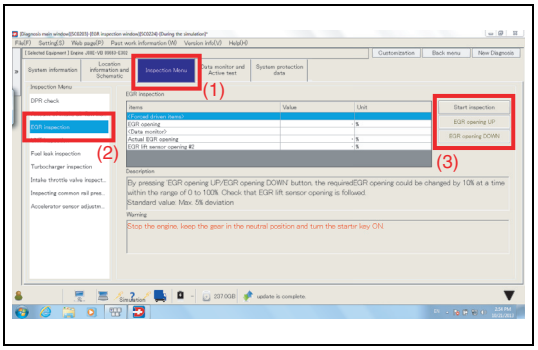


SAPH16F010300851

**NOTICE**
**Prepare a beaker or similar, plus a larger measuring vessel for measuring the DEF to be injected, before perform this inspection. (If the vessel is small, there is dispersion at the time of injection from the injector, and the measuring quantity decreases.)**

1. Set the starter switch to the "LOCK" position.
2. Remove the DEF injector from the muffler.

**HINT**
**Refer to the section "SELECTIVE CATALYTIC REDUCTION (SCR)" in the chapter "EMISSION CONTROL (J08E)" (S5-CJ08E14* or S5-UJ08E14*) for removal and installation of the DEF injector.**

3. Connect the vehicle to HINO DX II .
4. Set the starter switch to the "ON" position.
5. Select [DCU].
6. Select [Inspection Menu] on HINO DX II menu and check the operation of the DEF injector.

**NOTICE**
**When the DEF tank temperature is -5 °C (23 °F) or lower, perform warm-up to raise it to 10 °C (50 °F) or higher.**

Inspection procedure
(1) Select [Inspection Menu].
(2) Select [DEF solution addition test].
(3) Perform addition test as instructed on the HINO DX II screen. (Perform all three patterns)

**Is operation normal?**

**YES**

**Re-install the DEF injector on the muffler.**
**Go to step 16.**

**NO**

**Go to step 15.**

## 15 Inspect the DEF injector 2 [HINO DX II ]

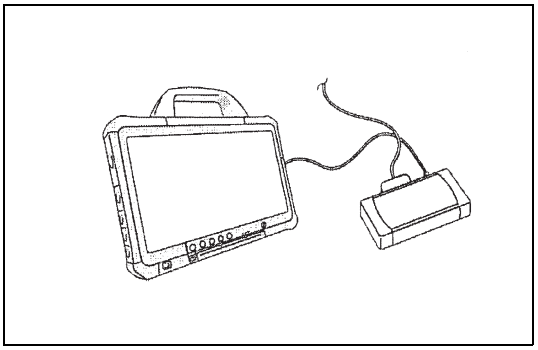

SAPH16F010300852

1. Set the starter switch to the "LOCK" position.
2. Replace the DEF injector with a new one. (Do not install it on the muffler.)
3. Set the starter switch to the "ON" position.
4. Perform DEF addition test as same as step 14.

**Is operation normal?**

**YES**

**Install the new injector on the muffler and complete the check.**
**After installing the injector, idle the engine (for about 10 min.) and on HINO DX II (Data Monitor) verify that the DEF solution is stable between 800 kPa {116 psi} and 1,051 kPa {152 psi}.**
**Perform "After-inspection work" of INFORMATION section.**

**NO**

**Re-install the DEF injector and replace the DEF pipe (pressure line).**
**After replacing the pipe, idle the engine (for about 10 min.) and on HINO DX II (Data Monitor) verify that the DEF solution is stable between 800 kPa {116 psi} and 1,051 kPa {152 psi}.**
**Perform "After-inspection work" of INFORMATION section.**

## 16 Inspect the air flow sensor connector

1. Check the connection of the air flow sensor connector (Looseness and poor contact).

**Was any failure found?**

**YES**

**Connect securely, repair if needed.**
**Go to step 17.**

**NO**

**Go to step 17.**

## 17 Inspect the air flow sensor

1. Check the installation of the air flow sensor.
2. Make sure there is no dirt or damage to the air flow sensor.

**Was any failure found?**

**YES**

**If dirt, clogging or damage was found in sensing unit, replace the air flow sensor.**
**Go to step 18.**

**NO**

**Go to step 18.**

| 18 | Inspect for short-circuit of the air flow sensor harness |
|---|---|

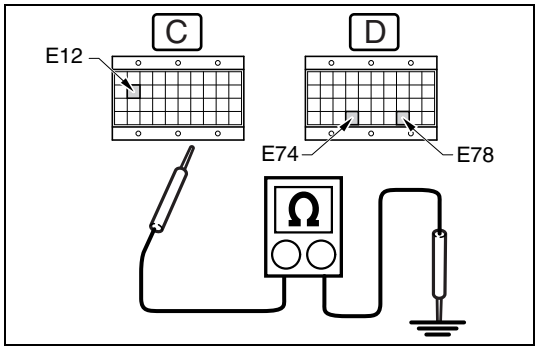

SAPH16F010300853

1. Set the starter switch to the "LOCK" position.
2. Connect the signal check harness to the engine ECU vehicle-side harness. (Do not connect the harness to the ECU.)
3. Disconnect the air flow sensor connector.
4. Use the electrical tester to measure the resistance between the terminals of the engine ECU (signal check harness) and ground.

| Measurement conditions | Tester connections | Standard values |
|---|---|---|
| **Starter switch: LOCK** | **Tester connections<br>Engine ECU (signal check harness)<br>AFSI(E74) – Ground<br>AG4(E78) – Ground<br>AFVB(E12) – Ground** | **∞Ω** |

**Do the measurements meet the standard value?**

**YES**

**Go to step 19.**

**NO**

**Repair or replace the harness.<br>Go to step 19.**

| 19 | Inspect disconnection of the air flow sensor harness |
|---|---|

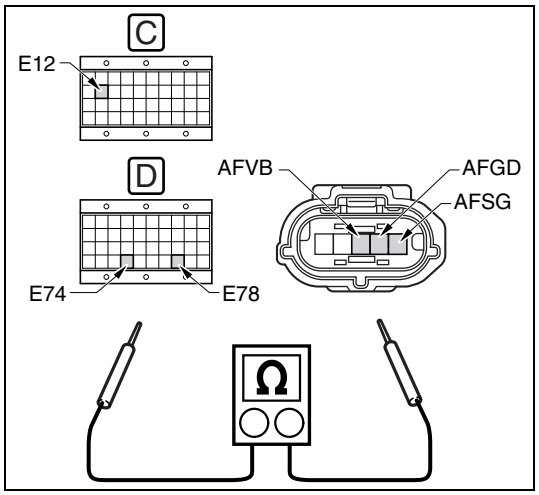

SAPH16F010300854

1. Use the electrical tester to measure the resistance between the terminals of the engine ECU (signal check harness) and air flow sensor vehicle-side connector.

| Measurement conditions | Tester connections | Standard values |
|---|---|---|
| **Starter switch: LOCK** | **Tester connections<br>Engine ECU (signal check harness) – Air flow sensor vehicle-side connector<br>AFSI(E74) – AFSG<br>AG4(E78) – AFGD<br>AFVB(E12) – AFVB** | **1 Ω or less** |

**Do the measurements meet the standard value?**

**YES**

**Go to step 20.**

**NO**

**Repair or replace the harness.**
**Go to step 20.**

## 20 Inspect the air flow sensor power supply

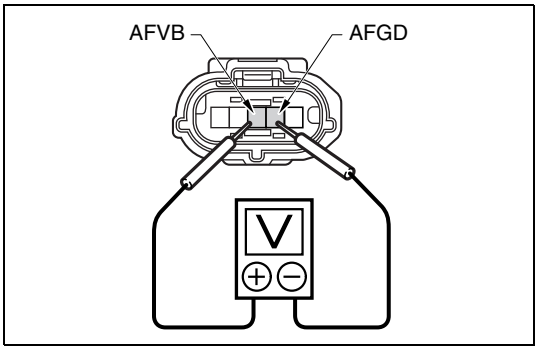


SAPH16F010300855

1. Connect the signal check harness to the engine ECU.
2. Set the starter switch to the "ON" position.
3. Use the electrical tester to measure the voltage between the terminals of the air flow sensor vehicle-side connector.

| Measurement conditions | Tester connections | Standard values |
|---|---|---|
| Starter switch: ON | Tester connections<br>Air flow sensor vehicle-side connector<br>AFVB – AFGD | 4.5 – 5.5 V |

**Do the measurements meet the standard value?**

**YES**

**Go to step 21.**

**NO**

**Replace the engine ECU.**
**Go to step 21.**

## 21 Inspect the air flow sensor signal

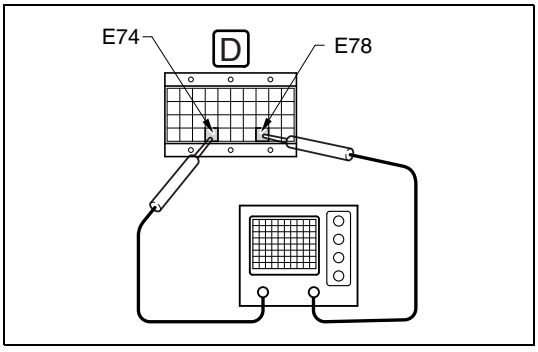


SAPH16F010300856

1. Set the starter switch to the "LOCK" position.
2. Connect the air flow sensor connector.
3. Start the engine.
4. Use the oscilloscope to measure the signal voltage between the terminals in the engine ECU (signal check harness).

| Measurement conditions | Tester connections | Standard values |
|---|---|---|
| After engine warm-up, with engine idling | Engine ECU (signal check harness)<br>AFSI(E74) – AG4(E78) | 5 – 6 kHz |

**Do the measurements meet the standard value?**

| YES | NO |
|---|---|
| **Go to step 22.**<br>**If any failure was found at the step 16 - 20, perform "After-inspection work" of INFORMATION section.** | **Replace the air flow sensor.**<br>**Perform "After-inspection work" of INFORMATION section.** |

## 22 Perform a basic engine check

1. Perform a basic engine check using the ENGINE BASIC INSPECTION SHEET (ENGINE INSPECTION CHECK SHEET).

**Was any failure found?**

| YES | NO |
|---|---|
| **Repair or replace the faulty part.**<br>**Perform "After-inspection work" of INFORMATION section.** | **Go to step 23.** |

## 23 Inspect the exhaust pipe

1. Make sure there is no soot leakage from the exhaust pipe outlet.

**Was any failure found?**

| YES | NO |
|---|---|
| **Replace the DPR filter and the PM sensor.**<br>**After replacing the filter, execute a DPR manual regeneration and check if no DTC (P207F) is detected.**<br>**Perform "After-inspection work" of INFORMATION section.** | **Go to step 24.** |

| 24 | Inspect the SCR catalyst [HINO DX II ] |
|---|---|

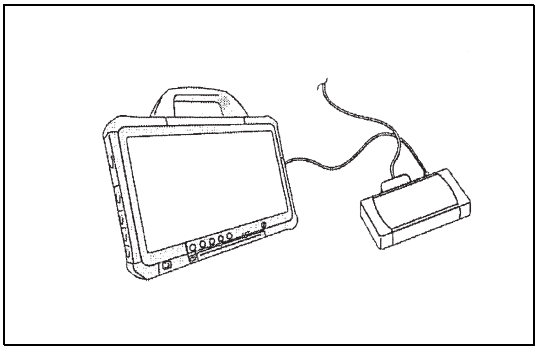

SAPH16F010300857

1. Set the starter switch to the "LOCK" position.
2. Replace the SCR catalyst.
3. Set the starter switch to the "ON" position.
4. Erase the trouble history.
5. Form the DTC detection condition.
6. Select [Engine] and check if P207F has been detected.

**Has DTC P207F been detected?**

**YES**

**Replace the engine ECU.**
**Perform "After-inspection work" of INFORMATION section.**

**NO**

**Procedure completed. (SCR catalyst is faulty.)**
**Perform "After-inspection work" of INFORMATION section.**

# DTC: P2080

EN01H16F01030F03001140

## P2080: Exhaust gas temperature sensor 1 (ATC upstream) - rationality

INFORMATION [at Starter switch on]

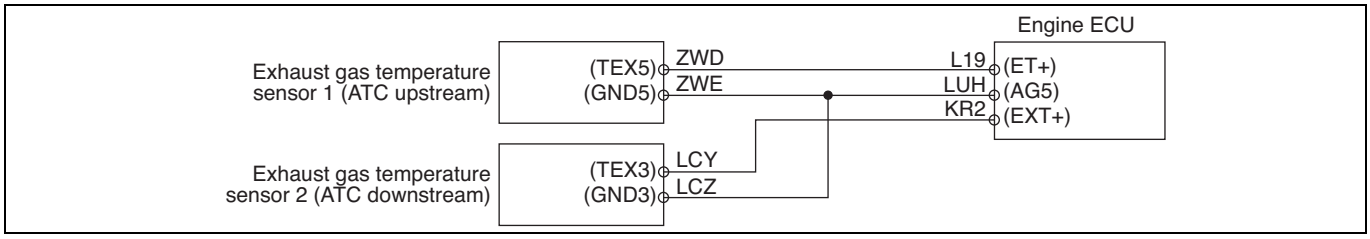


SAPH16F010300858

**1. Technical description**

- The exhaust gas temperature is constantly detected by the exhaust gas temperature sensor 1 (ATC upstream).
- The value of the exhaust gas temperature sensor 1 (ATC upstream) is used to control DPR regeneration.

**<Description of malfunction>**

- The exhaust gas temperature sensor 1 (ATC upstream) value cannot be correctly recognized.

**2. DTC set condition**

(1) DTC detection condition

- Battery voltage is in the range of 11 V to 16 V.
- Starter switch ON.
- Engine stall.
- Difference between engine coolant temperature and intake temperature is within ±8 °C {±14.4 °F}.
- Difference between engine coolant temperature before starter key "ON" and after starter key "ON" is 30 °C {54 °F} or more.
- Engine coolant temperature and intake temperature are at least -10 °C {14 °F}.

(2) Judgment criteria

**The conditions described below remain for 1 second or more.**

- Difference between exhaust gas temperature sensor 1 (ATC upstream) and exhaust gas temperature sensor 2 (ATC downstream) stays more than ±50°C {±90°F}.
- Difference between exhaust gas temperature sensor 2 (ATC downstream) and exhaust gas temperature sensor 3 (DOC inlet) stays less than ±50°C {±90°F}.
- Difference between exhaust gas temperature sensor 3 (DOC inlet) and exhaust gas temperature sensor 4 (DPR inlet) stays less than ±50°C {±90°F}.
- Difference between exhaust gas temperature sensor 4 (DPR inlet) and exhaust gas temperature sensor 5 (DPR outlet) stays less than ±50°C {±90°F}.

**3. Reset condition**

- Immediately after normal operation is restored.

**4. Indication, warning or system control regulation when the DTC is set.**

- MIL: ON
- SVS light: OFF

**5. Symptoms on the vehicle when the DTC is set**

**<Symptoms on the vehicle due to backup control (fail safe function)>**

- –

**<Symptoms on the vehicle due to malfunction>**

- –

**6. Pre-inspection work**

- Check that the battery voltage is in the normal range.

**7. After-inspection work**

- Clear all past DTCs.
- Check that no DTC is stored after test drive.

**8. Estimated failure factors**

**Exhaust gas temperature sensor 1 (ATC upstream) and exhaust gas temperature sensor 2 (ATC downstream):**

- Disconnected sensor or sensing unit failure (due to dirt, clogging, damage, etc.)
- Abnormal sensor resistance
- Failure of engine ECU sensor power supply

## P2080: Exhaust gas temperature sensor 1 (ATC upstream) - rationality

INFORMATION [While Driving]

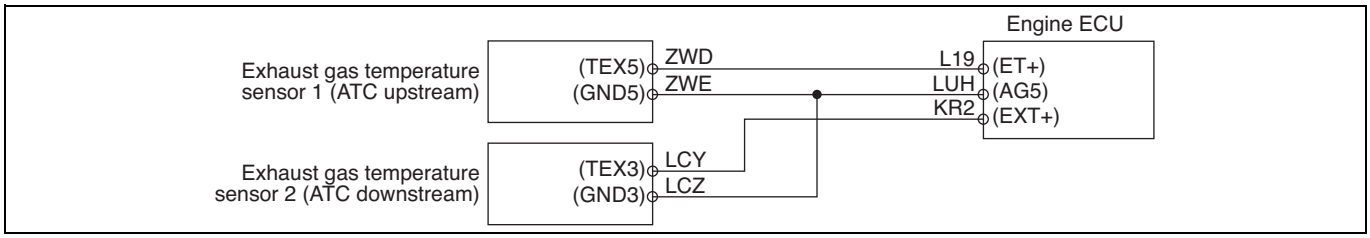


SAPH16F010300859

**1. Technical description**

- The exhaust gas temperature is constantly detected by the exhaust gas temperature sensor 1 (ATC upstream) and the exhaust gas temperature sensor 2 (ATC downstream).
- The value of the exhaust gas temperature sensor 1 (ATC upstream) and the exhaust gas temperature sensor 2 (ATC downstream) are used to control DPR regeneration.

**<Description of malfunction>**

- The exhaust gas temperature sensor 1 (ATC upstream) and the exhaust gas temperature sensor 2 (ATC downstream) cannot be correctly recognized.

**2. DTC set condition**

(1) DTC detection condition

- At least 10 seconds has elapsed since engine was started.
- Cumulative exhaust gas flow amount ≥ 2 kg.
- Cumulative exhaust gas flow amount of 15 kg or more with after regeneration.

**After the above:**

- Battery voltage is in the range of 11 V to 16 V.
- Engine speed ≥ 500 r/min for at least 5 seconds
- Engine speed ≥ 1,750 r/min
- Fuel injection amount ≥ 15 $mm^3$/st
- Exhaust gas flow quantity ≥ 500 kg/h
- Difference between engine coolant temperature and intake temperature is more than ± 8°C {± 14.4 °F}

**In addition, the following conditions continue for at least 10 seconds:**

- Engine speed variation is within ± 625 r/min/sec.
- Fuel injection quantity variation is within ± 625 $mm^3$/st/sec.
- Vehicle speed ≥ 18.8 mile/h

(2) Judgment criteria

- Difference between calculated value and actual value of exhaust gas temperature sensor 3 (DOC inlet) is not less than 125 °C {257 °F} for 3 seconds.
- Difference between calculated value and actual value of exhaust gas temperature sensor 2 (ATC downstream) is not less than 100°C {212°F} for 3 seconds.

**3. Reset condition**

- Immediately after normal operation is restored.

**4. Indication, warning or system control regulation when the DTC is set.**

- MIL: ON
- SVS light: OFF

**5. Symptoms on the vehicle when the DTC is set**

**<Symptoms on the vehicle due to backup control (fail safe function)>**

- –

**<Symptoms on the vehicle due to malfunction>**

- –

**6. Pre-inspection work**

- Check that the battery voltage is in the normal range.

**7. After-inspection work**

- Clear all past DTCs.
- Check that no DTC is detected after test drive.

**8. Estimated failure factors**

**Exhaust gas temperature sensor 1 (ATC upstream) and exhaust gas temperature sensor 2 (ATC downstream):**

- Disconnected sensor or sensing unit failure (due to dirt, clogging, damage, etc.)
- Abnormal sensor resistance
- Failure of engine ECU sensor power supply

## INSPECTION PROCEDURE: P2080

| | |
|---|---|
| **1** | **Inspect the exhaust gas temperature sensor 1 (ATC upstream) and the exhaust gas temperature sensor 2 (ATC downstream) connector** |

1. Check the connection of the exhaust gas temperature sensor 1 (ATC upstream) and the exhaust gas temperature sensor 2 (ATC downstream) connector (looseness and poor contact).

**Was any failure found?**

**YES**

**Connect securely, repair if needed.**
**Perform "After-inspection work" of INFORMATION section.**

**NO**

**Go to step 2.**

| | |
|---|---|
| **2** | **Inspect the exhaust gas temperature sensor 1 (ATC upstream) and the exhaust gas temperature sensor 2 (ATC downstream)** |

1. Check the installation of the exhaust gas temperature sensor 1 (ATC upstream) and the exhaust gas temperature sensor 2 (ATC downstream).
2. Make sure there is no dirt, damage or clogging in the sensing unit of the exhaust gas temperature sensor 1 (ATC upstream) and the exhaust gas temperature sensor 2 (ATC downstream).

**Was any failure found?**

**YES**

**Clean the sensing unit and install it properly.**
**If damaged, replace the faulty part.**
**Perform "After-inspection work" of INFORMATION section.**

**NO**

**Go to step 3.**

| 3 | Inspect the exhaust gas temperature sensor 1 (ATC upstream) and the exhaust gas temperature sensor 2 (ATC downstream) unit |
|---|---|

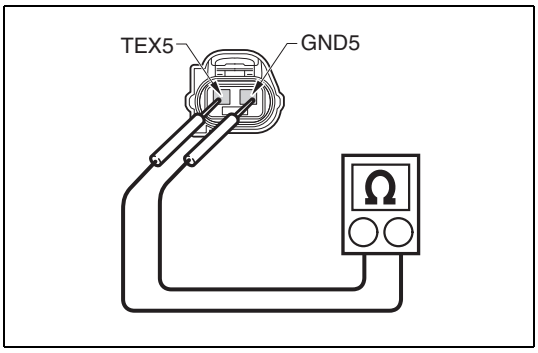


SAPH16F010300860

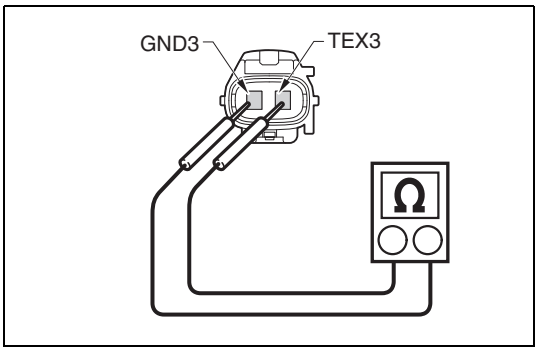


SAPH16F010300861

1. Set the starter switch to the "LOCK" position.
2. Disconnect the exhaust gas temperature sensor 1 (ATC upstream) and the exhaust gas temperature sensor 2 (ATC downstream) connector.
3. Use the electrical tester to measure the resistance between the terminals of the exhaust gas temperature sensor 1 (ATC upstream) and the exhaust gas temperature sensor 2 (ATC downstream).

| Measurement conditions | Tester connections | Standard values |
|---|---|---|
| **Starter switch: LOCK** | **Exhaust gas temperature sensor 1 (ATC upstream) TEX5 – GND5**<br>**Exhaust gas temperature sensor 2 (ATC downstream) TEX3 – GND3** | **20 °C {68 °F}: 13.7 – 29.8 kΩ**<br>**50 °C {122 °F}: 7.13 – 13.7 kΩ**<br>**80 °C {176 °F}: 4.1 – 7.13 kΩ** |

**Do the measurements meet the standard value?**

**YES**

**Go to step 4.**

**NO**

**Replace the faulty part.**
**Perform "After-inspection work" of INFORMATION section.**

| 4 | Inspect the sensor power supply |
|---|---|

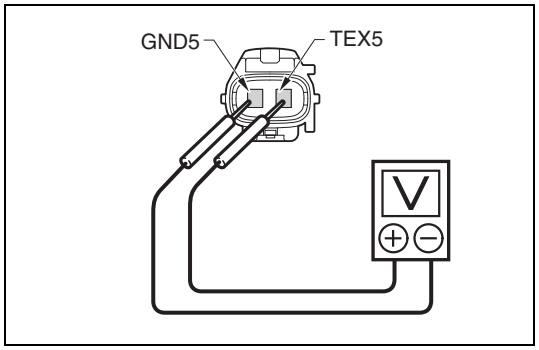


SAPH16F010300862

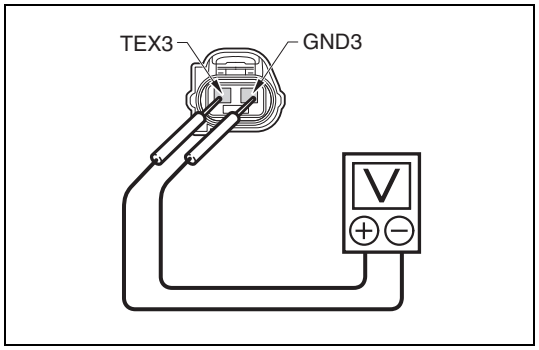


SAPH16F010300863

1. Set the starter switch to the "ON" position.
2. Use the electrical tester to measure the voltage between the terminals of the exhaust gas temperature sensor 1 (ATC upstream) and the exhaust gas temperature sensor 2 (ATC downstream) vehicle-side connector.

| Measurement conditions | Tester connections | Standard values |
|---|---|---|
| Starter switch: ON | Exhaust gas temperature sensor 1 (ATC upstream) vehicle-side connector GND5 – TEX5<br>Exhaust gas temperature sensor 2 (ATC downstream) vehicle-side connector TEX3 – GND3 | 4.5 – 5.5 V |

**Do the measurements meet the standard value?**

**YES** → **Go to step 7.**

**NO** → **Go to step 5.**

| 5 | Inspect for short-circuit of the exhaust gas temperature sensor 1 (ATC upstream) and the exhaust gas temperature sensor 2 (ATC downstream) harness |
|---|---|

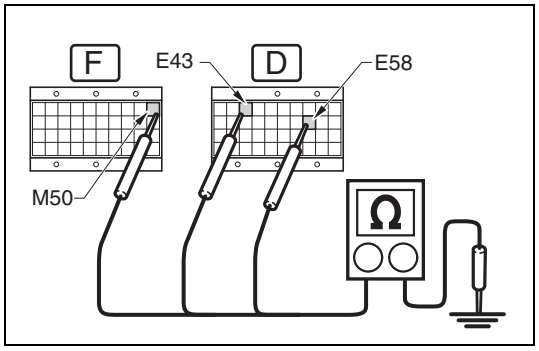


SAPH16F010300864

1. Set the starter switch to the "LOCK" position.
2. Connect the signal check harness to the engine ECU. (Do not connect harness to the ECU.)
3. Use the electrical tester to measure the resistance between the terminals of the engine ECU and ground.

| Measurement conditions | Tester connections | Standard values |
|---|---|---|
| Starter switch: LOCK | Engine ECU (signal check harness) EXT+ (E43) – Ground<br>AG5 (E58) – Ground | ∞ Ω |

**Do the measurements meet the standard value?**

**YES**

**Go to step 6.**

**NO**

**Repair or replace the harness.**
**Perform "After-inspection work" of INFORMATION section.**

## 6 Inspect disconnection of the exhaust gas temperature sensor 1 (ATC upstream) and the exhaust gas temperature sensor 2 (ATC downstream) harness

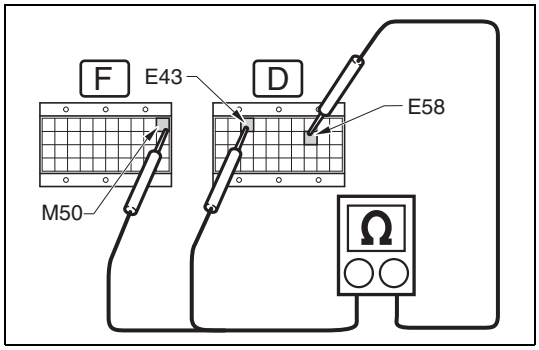

SAPH16F010300865

1. Connect the exhaust gas temperature sensor 1 (ATC upstream) and the exhaust gas temperature sensor 2 (ATC downstream) connector.
2. Use the electrical tester to measure the resistance between the terminals of the engine ECU (signal check harness).

| Measurement conditions | Tester connections | Standard values |
|---|---|---|
| Starter switch: LOCK | Engine ECU (signal check harness) EXT+ (E43) – AG5 (E58)<br>KR2 (M50) – AG5 (E58) | 20 °C {68 °F}: 13.7 – 29.8 kΩ<br>50 °C {122 °F}: 7.13 – 13.7 kΩ<br>80 °C {176 °F}: 4.1 – 7.13 kΩ |

**Do the measurements meet the standard value?**

**YES**

**Go to step 7.**

**NO**

**Repair or replace the harness.**
**Perform "After-inspection work" of INFORMATION section.**

## 7 Check the DTC detected (Engine ECU)

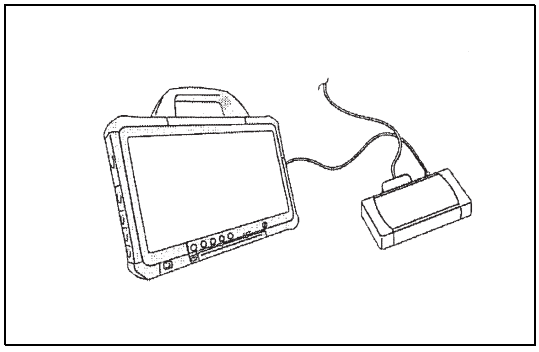
SAPH16F010300866

1. Perform engine warm up. (engine coolant temperature: 80 °C {176 °F} or more)
2. Stop the engine and set the starter switch to the "LOCK" position.
3. Connect the vehicle to HINO DX II .
4. Set the starter switch to the "ON" position.
5. Select [Engine] and check if P2080 has been detected.

**Has DTC P2080 been detected?**

**YES**

**Replace the engine ECU.**
**Perform "After-inspection work" of INFORMATION section.**

**NO**

**Procedure completed.**
**Perform "After-inspection work" of INFORMATION section.**

# DTC: P2084

EN01H16F01030F03001141

## 2084: Exhaust gas temperature sensor 2 (ATC downstream) - rationality

INFORMATION [Starter switch on]

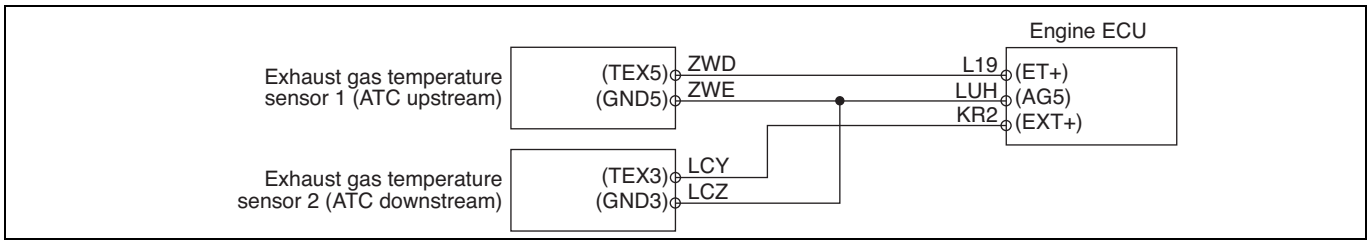


SAPH16F010300867

**1. Technical description**

- The value of the exhaust gas temperature sensor 2 (ATC downstream) is used to control DPR regeneration.

**<Description of malfunction>**

- The exhaust gas temperature sensor 2 (ATC downstream) valve cannot be correctly recognized.

**2. DTC set condition**

(1) DTC detection condition

- Battery voltage is in the range of 11 V to 16 V.
- Starter switch ON.
- Engine stall.
- Difference between engine coolant temperature and intake temperature is within ±8°C {±14.4°F}.
- Difference between engine coolant temperature before starter switch "ON" and after starter switch "ON" is 30 °C {54 °F} or more.
- Engine coolant temperature and intake temperature are at least -10°C {14°F}.

(2) Judgment criteria

**The conditions described below remain for 9 seconds or more.**

- Difference between exhaust gas temperature sensor 1 (ATC upstream) and exhaust gas temperature sensor 2 (ATC downstream) stays more than ± 50 °C {±90°F}.
- Difference between exhaust gas temperature sensor 2 (ATC downstream) and exhaust gas temperature sensor 3 (DOC inlet) stays more than ± 50 °C {±90°F}.
- Difference between exhaust gas temperature sensor 3 (DOC inlet) and exhaust gas temperature sensor 4 (DPR inlet) stays less than ± 50 °C {±90°F}.
- Difference between exhaust gas temperature sensor 4 (DPR inlet) and exhaust gas temperature sensor 5 (DPR inlet) stays less than ± 50 °C {±90°F}

**3. Reset condition**

- Immediately after normal operation is restored.

**4. Indication, warning or system control regulation when the DTC is set.**

- MIL: ON
- SVS light: OFF

**5. Symptoms on the vehicle when the DTC is set**

**<Symptoms on the vehicle due to backup control (fail safe function)>**

- –

**<Symptoms on the vehicle due to malfunction>**

- –

**6. Pre-inspection work**

- Check that the battery voltage is in the normal range.

**7. After-inspection work**

- Clear all past DTCs.
- Check that no DTC is stored after test drive.

**8. Estimated failure factors**

**Exhaust gas temperature sensor 2 (ATC downstream):**

- Disconnected sensor or sensing unit failure (due to dirt, clogging, damage, etc.)
- Abnormal sensor resistance
- Failure of engine ECU sensor power supply

## P2084: Exhaust gas temperature sensor 2 (ATC downstream) - rationality

INFORMATION [While Driving]

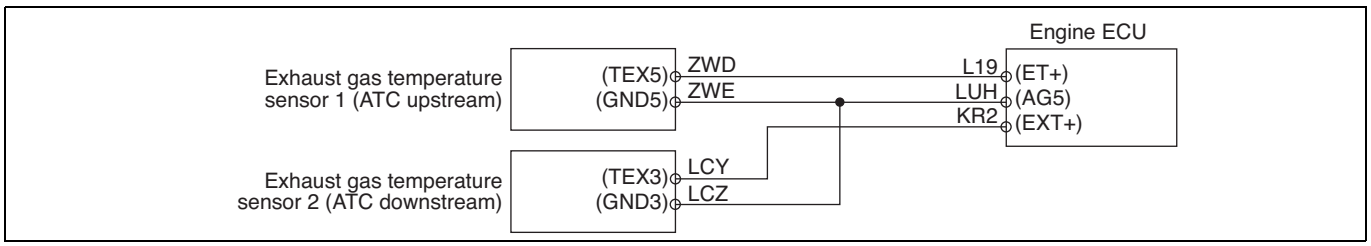


SAPH16F010300868

**1. Technical description**

- The exhaust gas temperature is constantly detected by the exhaust gas temperature sensor 2 (ATC downstream).
- The value of the exhaust gas temperature sensor 2 (ATC downstream) is used to control DPR regeneration.

**<Description of malfunction>**

- The exhaust gas temperature sensor 2 (ATC downstream) cannot be correctly recognized.

**2. DTC set condition**

(1) DTC detection condition

- At least 10 seconds has elapsed since engine was started.
- Cumulative exhaust gas flow amount ≥ 2 kg.
- Cumulative exhaust gas flow amount of 15 kg or more with after regeneration.

**After the above:**

- Battery voltage is in the range of 11 V to 16 V.
- Engine speed ≥ 500 r/min for at least 5 seconds
- Engine speed ≥ 1,750 r/min
- Fuel injection amount ≥ 15 $mm^3$/st/sec
- Exhaust gas flow quantity ≥ 500 kg/h
- Difference between engine coolant temperature and intake temperature is more than ± 8°C {±14.4°F}

**In addition, the following conditions continue for at least 10 seconds:**

- Engine speed variation is within ±625 r/min/sec.
- Fuel injection quantity variation is within ±625 $mm^3$/st.
- Vehicle speed ≥ 30 km/h {19 mph}

(2) Judgment criteria

- Difference between calculated value and actual value of exhaust gas temperature sensor 2 (ATC downstreem) is not less than 100 °C {90°F} for 3 seconds.
- Difference between calculated value and actual value of exhaust gas temperature sensor 3 (DOC inlet) is less than 100 °C {90°F} for 3 seconds.

**3. Reset condition**

- Immediately after normal operation is restored.

**4. Indication, warning or system control regulation when the DTC is set.**

- MIL: ON
- SVS light: OFF

**5. Symptoms on the vehicle when the DTC is set**

**<Symptoms on the vehicle due to backup control (fail safe function)>**

- –

**<Symptoms on the vehicle due to malfunction>**

- –

**6. Pre-inspection work**

- Check that the battery voltage is in the normal range.

**7. After-inspection work**

- Clear all past DTCs.
- Check that no DTC is detected after test drive.

**8. Estimated failure factors**

**Exhaust gas temperature sensor 2 (ATC downstream):**

- Disconnected sensor or sensing unit failure (due to dirt, clogging, damage, etc.)
- Abnormal sensor resistance
- Failure of engine ECU sensor power supply

## INSPECTION PROCEDURE: P2084

| 1 | **Inspect the exhaust gas temperature sensor 2 (ATC downstream) connector** |
|---|---|

1. Check the connection of the exhaust gas temperature sensor 2 (ATC downstream) connector (looseness and poor contact).

**Was any failure found?**

**YES**

**Connect securely, repair if needed.**
**Perform "After-inspection work" of INFORMATION section.**

**NO**

**Go to step 2.**

| 2 | **Inspect the exhaust gas temperature sensor 2 (ATC downstream)** |
|---|---|

1. Check the installation of the exhaust gas temperature sensor 2 (ATC downstream).
2. Make sure there is no dirt, damage or clogging in the sensing unit of the exhaust gas temperature sensor 2 (ATC downstream).

**Was any failure found?**

**YES**

**Clean the sensing unit and install it properly.**
**If damaged, replace the exhaust gas temperature sensor 2 (ATC downstream).**
**Perform "After-inspection work" of INFORMATION section.**

**NO**

**Go to step 3.**

| 3 | Inspect the exhaust gas temperature sensor 2 (ATC downstream) unit |
|---|---|

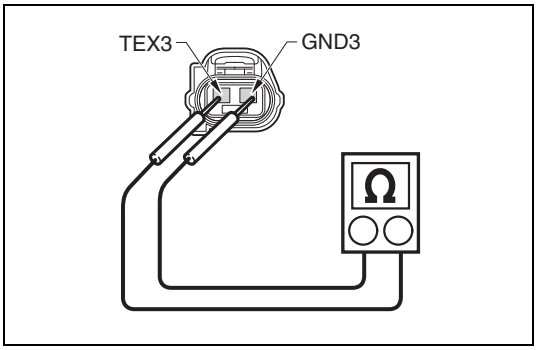


SAPH16F010300869

1. Set the starter switch to the "LOCK" position.
2. Disconnect the exhaust gas temperature sensor 2 (ATC downstream) connector.
3. Use the electrical tester to measure the resistance between the terminals of the exhaust gas temperature sensor 2 (ATC downstream).

| Measurement conditions | Tester connections | Standard values |
|---|---|---|
| **Starter switch: LOCK** | **Exhaust gas temperature sensor 2 (ATC downstream) TEX3 – GND3** | **20 °C {68 °F}: 13.7 – 29.8 kΩ 50 °C {122 °F}: 7.13 – 13.7 kΩ 80 °C {176 °F}: 4.1 – 7.13 kΩ** |

**Do the measurements meet the standard value?**

**YES**

**Go to step 4.**

**NO**

**Replace the exhaust gas temperature sensor 2 (ATC downstream).**
**Perform "After-inspection work" of INFORMATION section.**

| 4 | Inspect the sensor power supply |
|---|---|

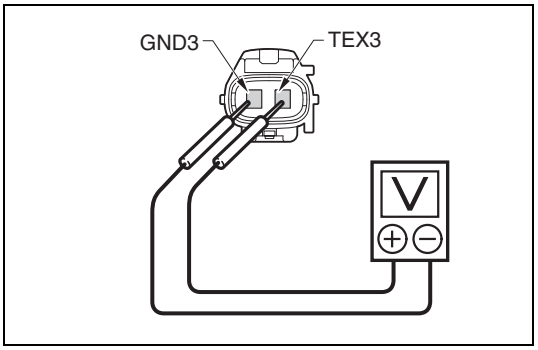


SAPH16F010300870

1. Set the starter switch to the "ON" position.
2. Use the electrical tester to measure the voltage between the terminals of the exhaust gas temperature sensor 2 (ATC downstream) vehicle-side connector.

| Measurement conditions | Tester connections | Standard values |
|---|---|---|
| **Starter switch: ON** | **Exhaust gas temperature sensor 2 (ATC downstream) vehicle-side connector TEX3 – GND3** | **4.5 – 5.5 V** |

**Do the measurements meet the standard value?**

YES

**Go to step 7.**

NO

**Go to step 5.**

| 5 | **Inspect for short-circuit of the exhaust gas temperature sensor 2 (ATC downstream) harness** |
|---|---|

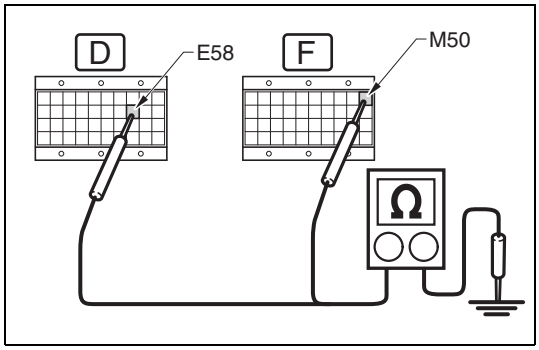


SAPH16F010300871

1. Set the starter switch to the "LOCK" position.
2. Connect the signal check harness to the engine ECU. (Do not connect harness to the ECU.)
3. Use the electrical tester to measure the resistance between the terminals of the engine ECU and ground.

| Measurement conditions | Tester connections | Standard values |
|---|---|---|
| **Starter switch: LOCK** | **Engine ECU (signal check harness) EXT+ (M50) – Ground AG5 (E58) – Ground** | ∞ Ω |

**Do the measurements meet the standard value?**

YES

**Go to step 6.**

NO

**Repair or replace the harness.**
**Perform "After-inspection work" of INFORMATION section.**

| 6 | Inspect disconnection of the exhaust gas temperature sensor 2 (ATC downstream) harness |
|---|---|

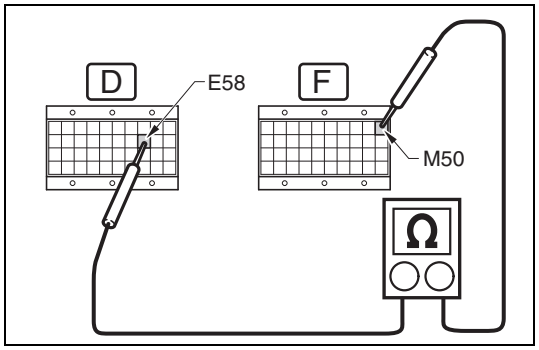

SAPH16F010300872

1. Connect the exhaust gas temperature sensor 2 (ATC downstream) connector.
2. Use the electrical tester to measure the resistance between the terminals of the engine ECU (signal check harness).

| Measurement conditions | Tester connections | Standard values |
|---|---|---|
| **Starter switch: LOCK** | **Engine ECU (signal check harness) EXT+ (M50) – AG5 (E58)** | **20 °C {68 °F}: 13.7 – 29.8 kΩ 50 °C {122 °F}: 7.13 – 13.7 kΩ 80 °C {176 °F}: 4.1 – 7.13 kΩ** |

**Do the measurements meet the standard value?**

**YES**

**Go to step 7.**

**NO**

**Repair or replace the harness.**
**Perform "After-inspection work" of INFORMATION section.**

| 7 | Check the DTC detected (Engine ECU) |
|---|---|

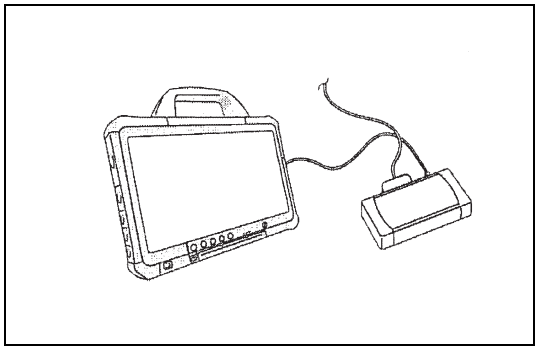
SAPH16F010300873

1. Perform engine warm up. (engine coolant temperature: 80°C {176°F} or more)
2. Stop the engine and set the starter switch to the "LOCK" position.
3. Connect the vehicle to HINO DX II .
4. Set the starter switch to the "ON" position.
5. Select [Engine] and check if P2084 has been detected.

**Has DTC P2084 been detected?**

**YES**

**Replace the engine ECU.**
**Perform "After-inspection work" of INFORMATION section.**

**NO**

**Procedure completed.**
**Perform "After-inspection work" of INFORMATION section.**

# DTC: P20CD

EN01H16F01030F03001142

## P20CD: Malfunction of fuel dosing valve (Low)

INFORMATION

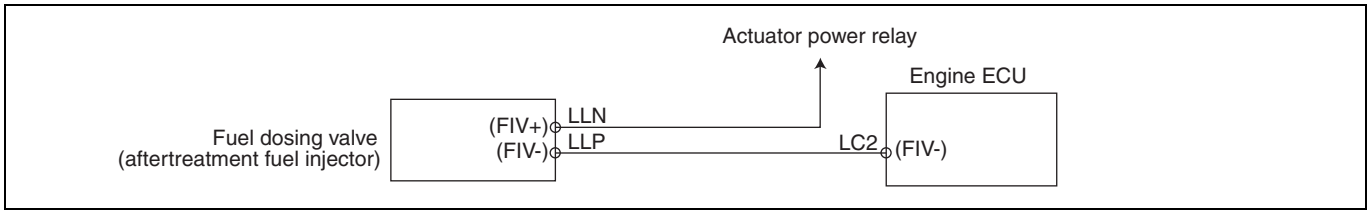


SAPH16F010300874

**1. Technical description**

- –

**<Description of malfunction>**

- Fuel dosing valve (Fuel addition valve/aftertreatment fuel injector) is not working properly.
- Injector failure and harness GND short-circuit are likely to have occurred.

**2. DTC set condition**

(1) DTC detection condition

- Starter switch ON.
- The battery voltage is in the range of 10 – 16 V.
- Fuel dosing valve inactivity request is in progress.

(2) Judgment criteria

- The condition that the fuel dosing valve circuit voltage is 2.8 V or less remains for 3 seconds or more.

**3. Reset condition**

- Immediately after normal operation is restored.

**4. Indication, warning or system control regulation when the DTC is set.**

- MIL: ON
- SVS light: OFF

**5. Symptoms on the vehicle when the DTC is set**

**<Symptoms on the vehicle due to backup control (fail safe function)>**

- –

**<Symptoms on the vehicle due to malfunction>**

- DPR regeneration failure.

**6. Pre-inspection work**

- Check that the battery voltage is in the normal range.

**7. After-inspection work**

- Clear all past DTCs.
- Check that no DTC is detected after test drive.

**8. Estimated failure factors**

- GND short-circuit in fuel dosing valve signal line
- Malfunction of fuel cut valve
- Malfunction of engine ECU

## INSPECTION PROCEDURE: P20CD

| 1 | Inspect the fuel dosing valve connector |
|---|---|

1. Inspect the fuel dosing valve connector for improper connection (improper fitting and defective contact).

**Was any failure found?**

**YES**

**Connect securely, repair if needed.**
**Perform "After-inspection work" of INFORMATION section.**

**NO**

**Go to step 2.**

| 2 | Inspect the fuel dosing valve |
|---|---|

1. Check the installation of the fuel dosing valve.

**Was any failure found?**

**YES**

**Install the fuel injection valve correctly.**
**If damage is found, replace the fuel injection valve.**
**Perform "After-inspection work" of INFORMATION section.**

**NO**

**Go to step 3.**

| 3 | Inspect the fuel dosing valve power supply |
|---|---|

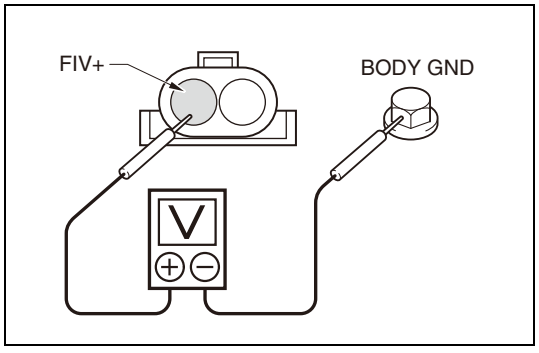


SAPH16F010300875

1. Disconnect the fuel dosing valve connector.
2. Set the starter switch to the "ON" position.
3. Using the electrical tester, measure the resistance between the terminals of the fuel dosing valve vehicle-side connector FIV+ terminal and ground.

| Measurement conditions | Tester connections | Standard values |
|---|---|---|
| Starter switch: ON | Fuel dosing valve vehicle-side connector<br>FIV+ – Ground | 10 V – 16 V |

**Is the measured value within the standard values?**

| YES | NO |
|---|---|
| **Go to step 4.** | **Repair or replace the wire harness (fuel dosing valve – J/C ENG-3)**<br>**Perform "After-inspection work" of INFORMATION section.** |

## 4 Inspect the fuel dosing valve wire harness for short circuit

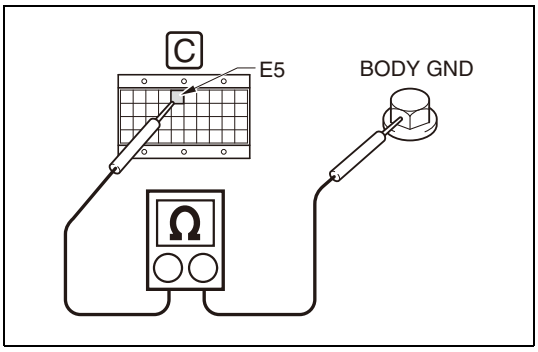

SAPH16F010300876

1. Set the starter switch to the "LOCK" position.
2. Connect the signal check harness to the engine ECU harness on the vehicle-side. (Do not connect to the ECU.)
3. Using the electrical tester, measure the resistance between the terminals of the engine ECU (signal check harness) FIV- (E5) terminal and ground.

| Measurement conditions | Tester connections | Standard values |
|---|---|---|
| **Starter switch: LOCK** | **Engine ECU (signal check harness) FIV- (E5) – Ground** | **∞ Ω** |

**Is the measured value within the standard values?**

| YES | NO |
|---|---|
| **Go to step 5.** | **Repair or replace the wire harness (fuel dosing valve – engine ECU).**<br>**Perform "After-inspection work" of INFORMATION section.** |

## 5 Inspect the fuel dosing valve wire harness for disconnection

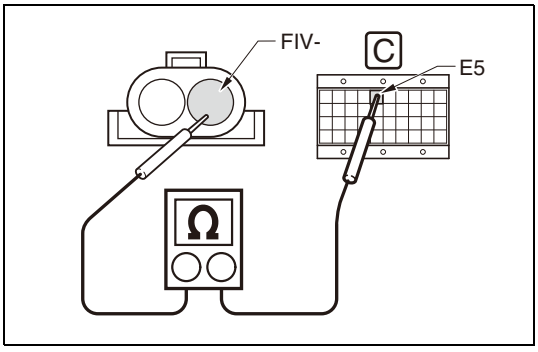

SAPH16F010300877

1. Using the electrical tester, measure the resistance from the engine ECU (signal check harness) to the terminals of the fuel dosing valve vehicle-side connector.

| Measurement conditions | Tester connections | Standard values |
|---|---|---|
| **Starter switch: LOCK** | **Engine ECU (signal check harness) – Fuel dosing valve vehicle-side connector FIV- – FIV- (E5)** | **Less than 2 Ω** |

**Is the measured value within the standard values?**

**YES**

**Go to step 6.**

**NO**

**Repair or replace the wire harness (fuel dosing valve – engine ECU).**
**Perform "After-inspection work" of INFORMATION section.**

| 6 | **Check the DTC detected [HINO DX II ]** |
|---|---|

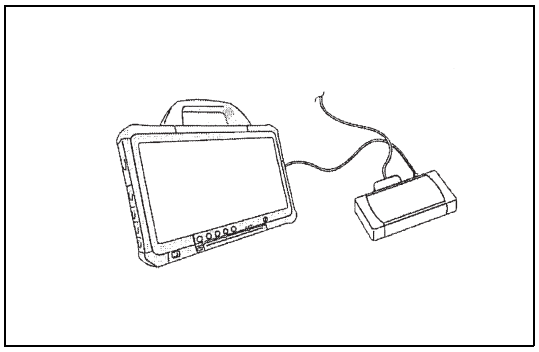

SAPH16F010300878

1. Connect the vehicle to HINO DX II .
2. Perform DPR manual regeneration.
3. After completion of regeneration, reload the DTC and check if the DTC P20CD has been detected.

**Has DTC P20CD been detected?**

**YES**

**Replace the engine ECU.**
**Perform "After-inspection work" of INFORMATION section.**

**NO**

**Procedure completed.**
**Perform "After-inspection work" of INFORMATION section.**

# DTC: P20CE

EN01H16F01030F03001143

## P20CE: Malfunction of fuel dosing valve (High)

INFORMATION

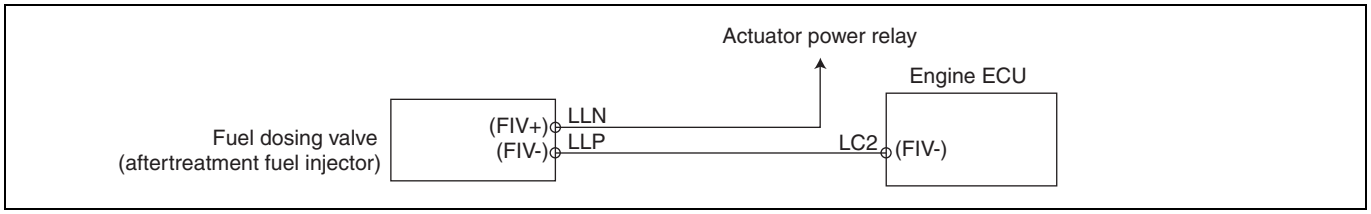


SAPH16F010300879

**1. Technical description**

- –

**<Description of malfunction>**

- Fuel dosing valve (Fuel addition valve/aftertreatment fuel injector) is not working properly.
- Injector failure and +B short-circuit are likely to have occurred.

**2. DTC set condition**

(1) DTC detection condition

- Starter switch ON.
- Battery voltage is in the range of 10 V to 16 V.
- Fuel dosing valve is not operating.

(2) Judgment criteria

- The condition that the fuel dosing valve circuit voltage is 3.0 V or more remains for 3 seconds or more.

**3. Reset condition**

- Immediately after normal operation is restored.

**4. Indication, warning or system control regulation when the DTC is set.**

- MIL: ON
- SVS light: OFF

**5. Symptoms on the vehicle when the DTC is set**

**<Symptoms on the vehicle due to backup control (fail safe function)>**

- –

**<Symptoms on the vehicle due to malfunction>**

- DPR regeneration failure.

**6. Pre-inspection work**

- Check that the battery voltage is in the normal range.

**7. After-inspection work**

- Clear all past DTCs.
- Check that no DTC is stored after test drive.

**8. Estimated failure factors**

- +B short-circuit in fuel dosing valve signal line.
- Malfunction of fuel cut valve.
- Malfunction of engine ECU.

## INSPECTION PROCEDURE: P20CE

| 1 | **Inspect the fuel dosing valve connector.** |
|---|---|

1. Inspect the fuel dosing valve connector for improper connection (improper fitting and detective contact).

**Was any failure found?**

**YES**

**Connect securely, repair if needed.**
**Perform "After-inspection work" of INFORMATION section.**

**NO**

**Go to step 2.**

| 2 | **Inspect the fuel dosing valve** |
|---|---|

1. Check the installation of the fuel dosing valve.

**Was any failure found?**

**YES**

**Install the fuel injection valve correctly.**
**If damage is found, replace the fuel injection valve.**
**Perform "After-inspection work" of INFORMATION section.**

**NO**

**Go to step 3.**

| 3 | Inspect the fuel dosing valve power supply |
|---|---|

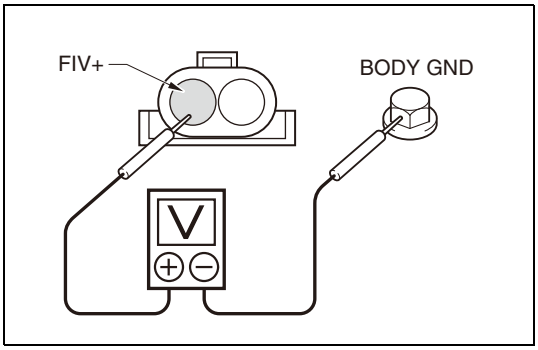


SAPH16F010300880

1. Disconnect the fuel dosing valve connector.
2. Set the starter switch to the "ON" position.
3. Using the electrical tester, measure the voltage between the terminals of the fuel dosing valve vehicle-side connector FIV+ terminal and ground.

| Measurement conditions | Tester connections | Standard values |
|---|---|---|
| Starter switch: ON | Fuel dosing valve vehicle-side connector FIV+ – Ground | 10 – 16 V |

**Do the measurements meet the standard value?**

**YES**

**Go to Step 4.**

**NO**

**Repair or replace the wire harness.**
**(Fuel dosing valve – J/C ENG-3)**
**Perform "After-inspection work" of INFORMATION section.**

| 4 | Inspect the fuel dosing valve wire harness for short circuit |
|---|---|

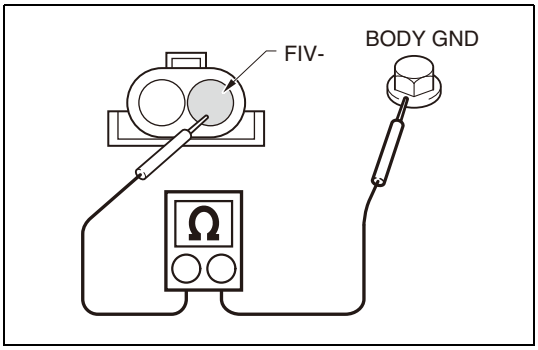


SAPH16F010300881

1. Set the starter switch to the "LOCK" position.
2. Disconnect the engine ECU.
3. Using the electrical tester, measure the resistance between the terminals of the fuel doing valve vehicle-side connector and ground.

| Measurement conditions | Tester connections | Standard values |
|---|---|---|
| Starter switch: LOCK | Fuel dosing valve vehicle-side connector FIV- – Ground | Less than 1 Ω |

**Do the measurements meet the standard value?**

YES

**Go to step 5.**

NO

**Repair or replace the harness.**
**(Fuel dosing valve – engine ECU)**
**Perform "After-inspection work" of INFORMATION section.**

| 5 | **Check the DTC detected [HINO DX II ]** |
|---|---|

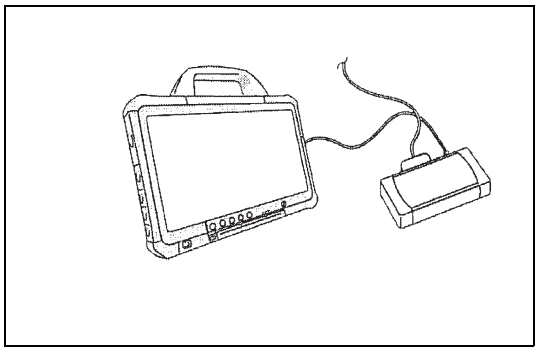

SAPH16F010300882

1. Connect the vehicle to HINO DX II .
2. Perform DPR manual regeneration.
3. After completion of regeneration, reload the DTC and check if the DTC P20CE has been detected.

**Has DTC P20CE been detected?**

YES

**Replace the engine ECU.**
**Perform "After-inspection work" of INFORMATION section.**

NO

**Procedure completed.**
**Perform "After-inspection work" of INFORMATION section.**

# DTC: P20CF

EN01H16F01030F03001144

## P20CF: Characteristic abnormality of fuel dosing valve

INFORMATION

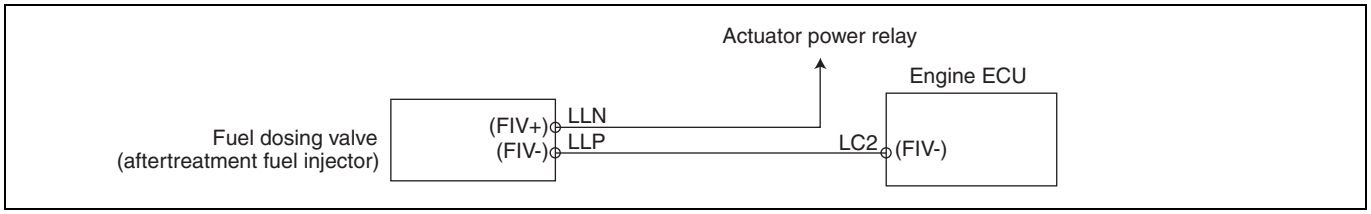


SAPH16F010300883

**1. Technical description**

- –

**<Description of malfunction>**

- Fuel dosing valve (Fuel addition valve/aftertreatment fuel injector) is not working properly.
- There is a possibility of fuel dosing valve failure.
- There is a possibility of fuel cut value failure.

**2. DTC set condition**

(1) DTC detection condition

A. Dosing valve leak judgment

- Not during or immediately after DPR regeneration
- DPR inlet temperature is more than 200 °C {392 °F.}
- Engine is running normally.

B. Dosing valve clogging judgment

- Manual regeneration in progress
- There is an injection instruction for the dosing valve.

(2) Judgment criteria

A. Judgment of leakage from the dosing value

- (DOC outlet temperature – DOC outlet estimate temperature based on DOC inlet temperature) is more than 390 °C {734 °F}.

B. Judgment of clogging of the dosing value

- It occurred two consecutive manual regeneration attempts that the DOC outlet temperature did not reach the soot combustion temperature, even though the accumulated amount of injection by the fuel dosing valve reached the prescribed level.

**3. Reset condition**

**A. Judgment of leakage from the dosing value.**

- After repair, perform the "DPR related memory reset" on the HINO DX II .

**B. Judgment of clogging of the dosing value**

- Perform the regeneration by using the dosing value, or after repair, perform the "DPR related memory reset" on the HINO DX II .

**4. Indication, warning or system control regulation when the DTC is set.**

- MIL: OFF
- SVS light: ON

**5. Symptoms on the vehicle when the DTC is set**

**<Symptoms on the vehicle due to backup control (fail safe function)>**

- –

**<Symptoms on the vehicle due to malfunction>**

- Fault in DPR regeneration.

**6. Pre-inspection work**

- Check that the battery voltage is in the normal range.
- Check that P0006, P0007, P20CD or P20CE has not been detected.

**7. After-inspection work**

- Clear all past DTCs.
- Check that no DTC is detected after test drive.

**8. Estimated failure factors**

- Fuel doing valve: clogging or failure
- Failure of exhaust gas temperature sensor 3 (DOC inlet)
- Failure of exhaust gas temperature sensor 4 (DPR inlet)
- Deterioration of DOC catalyst
- Failure of fuel cut valve

## INSPECTION PROCEDURE: P20CF

| 1 | Check the DTC detected (Engine ECU) [HINO DX II ] |
|---|---|

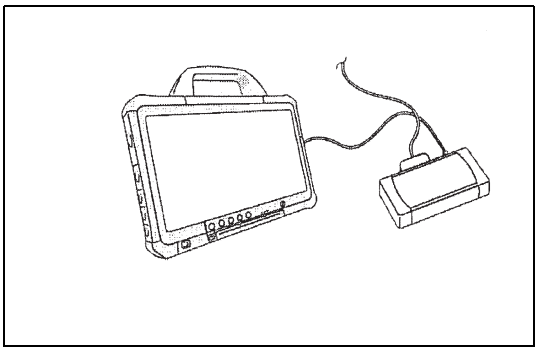

SAPH16F010300884

1. Connect the vehicle to HINO DX II .
2. Set the starter switch to the "ON" position.
3. Select [Engine] and check if any DTC other than P20CF (P20CD) has been detected.

**Has a DTC (P20CD) other than P20CF been detected?**

**YES**

**Go to diagnosis procedure of related DTC.**

**NO**

**Go to step 2.**

| 2 | Inspect the exhaust gas temperature sensor 4 (DPR inlet) |
|---|---|

1. Check the installation of the exhaust gas temperature sensor 4 (DPR inlet).
2. Make sure there is no dirt, damage or clogging in the sensing unit of the exhaust gas temperature sensor 4 (DPR inlet).

**Was any failure found?**

**YES**

**Clean the sensing unit and install it properly. If damaged, replace the exhaust gas temperature sensor 4 (DPR inlet).**
**Go to step 5.**

**NO**

**Go to step 3.**

| 3 | Inspect the exhaust gas temperature sensor 3 (DOC inlet) |
|---|---|

1. Check the installation of the exhaust gas temperature sensor 3 (DOC inlet).
2. Make sure there is no dirt, damage or clogging in the sensing unit of the exhaust gas temperature sensor 3 (DOC inlet).

**Was any failure found?**

YES

**Clean the sensing unit and install it properly. If damaged, replace the exhaust gas temperature sensor 3 (DOC inlet).**
**Go to step 5.**

NO

**Go to step 4.**

| 4 | **Inspect the fuel dosing value, the fuel cut valve and the fuel pipe** |
|---|---|

1. Check the fuel dosing valve according to its inspection procedure.
2. Check the fuel cut valve according to its inspection procedure.
3. Check the fuel pipe for damage, fuel leakage or oozing.

**Was any failure found?**

YES

**Repair or replace the failed parts, and then go to step 5. (There is a possibility of fuel leakage if P20CF occurs at times other than manual regeneration therefore replace the fuel dosing valve.)**

NO

**Go to step 5.**

| 5 | **Perform DPR manual regeneration** |
|---|---|

1. Perform the "DPR related memory reset" on the HINO DX II .
2. Perform manual regeneration by inspecting the DPR from the HINO DX II .
3. Check the "fuel dosing value clogging judgment flag".

**Did the fuel dosing value clogging judgment flag change to "ON" during manual regeneration?**

YES

**Go to step 6.**

NO

**Go to step 7.**

| 6 | **Judgment of manual regeneration after the test (When the "fuel dosing valve clogging judgment flag: "ON")** |
|---|---|

1. During manual regeneration, the "fuel dosing valve clogging judgment flag" changes to "ON" and manual regeneration ends.

**Did manual regeneration end?**

| YES | NO |
|---|---|
| **Check the fuel feed pump and fuel filter, and replace it needed.<br>Return to step 5.** | **Replace the DOC.<br>Return to step 5.** |

| 7 | Judgment of manual regeneration after the test (When "fuel dosing valve clogging judgment flag": "OFF") |
|---|---|

1. Manual regeneration, ends without the "fuel dosing valve clogging judgment flag" changing to "ON".

**Did manual regeneration end?**

| YES | NO |
|---|---|
| **Procedure completed.** | **Go to step 8.** |

| 8 | Check the DTC detected [HINO DX II ] |
|---|---|

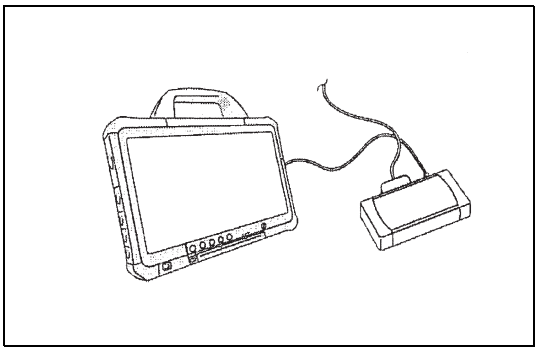

SAPH16F010300885

1. Check if any DTC has been detected on the screen of the HINO DX II .

**Has any DTC been detected?**

| YES | NO |
|---|---|
| **Go to diagnosis procedure of related DTC.** | **Return to step 5.** |

# DTC: P20D8

EN01H16F01030F03001145

## P20D8: Exhaust Fuel Doser open/close stuck

INFORMATION

**1. Technical description**

**<Description of malfunction>**

- The engine ECU detected sticking of the fuel dosing valve (Fuel addition valve/aftertreatment fuel injector).

**2. DTC set condition**

(1) DTC detection condition

- DPR regeneration is in process, or the following conditions remain for 3 seconds.
  - Engine revolution: 1,000 r/min or more
  - Exhaust gas temperature sensor 3 (DOC inlet): 260 °C {500 °F} or more
  - Exhaust gas temperature sensor 4 (DPR inlet): 200 °C {392 °F} or more
- Number of times of aftertreatment fuel injection (indicated times of engine ECU): 10 times

(2) Judgment criteria

- The number of times of actual fuel injection falls below 30% against the indication of aftertreatment fuel injection.

**3. Reset condition**

- Immediately after normal status is resumed

**4. Indication, warning or system control regulation when the DTC is set.**

- MIL: ON
- SVS light: OFF

**5. Symptoms on the vehicle when the DTC is set**

**<Symptoms on the vehicle due to backup control (fail safe function)>**

- –

**<Symptoms on the vehicle due to malfunction>**

- DPR regeneration failure

**6. Pre-inspection work**

- Check that the battery voltage is in the normal range.

**7. After-inspection work**

- Clear all past DTCs.
- Check that no DTC is detected after test drive.

**8. Estimated failure factors**

- Fuel leakage (loose joint bolt), clogging, crush, and wrong assembly in fuel pipe (for aftertreatment)
- Malfunction of the fuel dosing valve (abnormality in fuel injection quantity)
- Abnormality in characteristics of aftertreatment fuel injection line pressure sensor

## INSPECTION PROCEDURE: P20D8

| 1 | Check the DTC detected [HINO DX II ] |
|---|---|

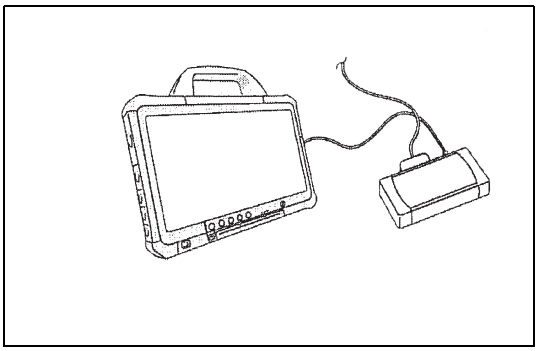

SAPH16F010300886

1. Set the starter switch to the "LOCK" position.
2. Connect the diagnostic system (HINO DX II ) to the vehicle.
3. Set the starter switch to the "ON" position.
4. Select [Engine] on the screen of HINO DX II and check if the DTC P20D8, P20CD, P20CE has been detected.

**Has a DTC other than P20D8 been detected?**

**YES**

**Perform the relevant DTC-specific trouble-shooting.**

**NO**

**Go to step 2.**

| 2 | Inspect the fuel pipe (for aftertreatment) |
|---|---|

1. Check if any of the following defects is found in the pipe between the fuel pump and the fuel dosing valve.

- Fuel leakage (loose joint bolt)
- Crush
- Wrong assembly

2. Bleed air from the fuel pipe and also check that there is no clogging in the pipe.

**<Inspection procedure>**

(1) Set the starter switch to the "ON" position.
(2) Loosen the joint bolt.
(3) Slowly push the feed pump until fuel comes out.

**⚠ CAUTION**
**Use care, as a large amount of fuel may come out if the feed pump is pushed excessively.**

**Was any failure found?**

**YES**

**Repair or replace the defective part. After repair or replacement, bleed air from the pipe and perform DPR manual regeneration.**

**NO**

**Go to step 3.**

| 3 | Inspect the fuel dosing valve |
|---|---|

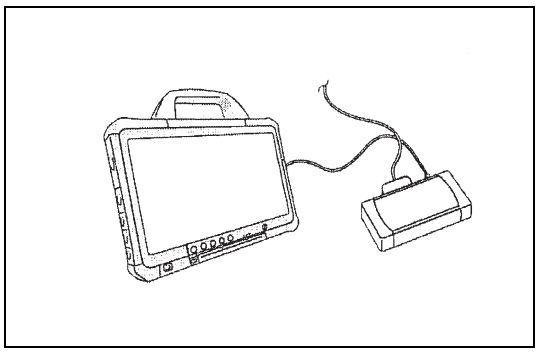

SAPH16F010300887

1. Remove the fuel dosing valve and clean the injection hole.

**⚠ CAUTION**

- **For details of the cleaning steps, refer to the "Engine Workshop Manual".**
- **Do not use cloth, etc. for cleaning to prevent clogging.**

2. Install the fuel dosing valve and inspect operation of the fuel dosing valve by using the diagnostic system (HINO DX II ).

- For detailed procedure, refer to the separate sheet "Inspecting operation of the fuel dosing valve".

**Was any failure found?**

**YES**

**Replace the fuel dosing valve.**
**Perform "After-inspection work" of INFORMATION section.**

**NO**

**Procedure completed.**
**Perform "After-inspection work" of INFORMATION section.**

## INSPECTING OPERATION OF THE FUEL DOSING VALVE

| 1 | Test method |
|---|---|

1. Connect the diagnostic system (HINO DX II ) to the vehicle.
2. Warm up the engine. (Coolant temperature: 80 °C {176 °F} or more)
3. Stop the engine and set the starter switch to the "ON" position.
4. Select [Engine] on the screen of HINO DX II , select [Customization] and check [DPR deposit volume].
   - When the [DPR deposit volume] is 2.5 or more: The value remains unchanged.
   - When the [DPR deposit volume] is less than 2.5: The value is changed to 2.5.
5. Start the engine.
6. On the screen of the diagnostic system, select [Data monitor Setting] and set [DPR exhaust gas temperature (IN)] and [Additional quantity of fuel] (Additive amount of fuel dosing valve) for monitoring.
7. Turn ON the DPR manual regeneration switch.
   - The idle r/min increases and the exhaust brake is actuated. Then, check that the exhaust brake is released and the idle r/min decreases.
8. Save the values on the "Data monitor" and draw a similar graph by referring to Figure 1.
9. Read the following from the graph:
   - Indication of injection for the fuel dosing valve (point A) -- With injection indication: Normal, Without injection indication: Abnormal
   - Temperature of Exhaust Temperature (IN) (point B) -- Single-stage rise: Normal, Two-stage rise: Abnormal

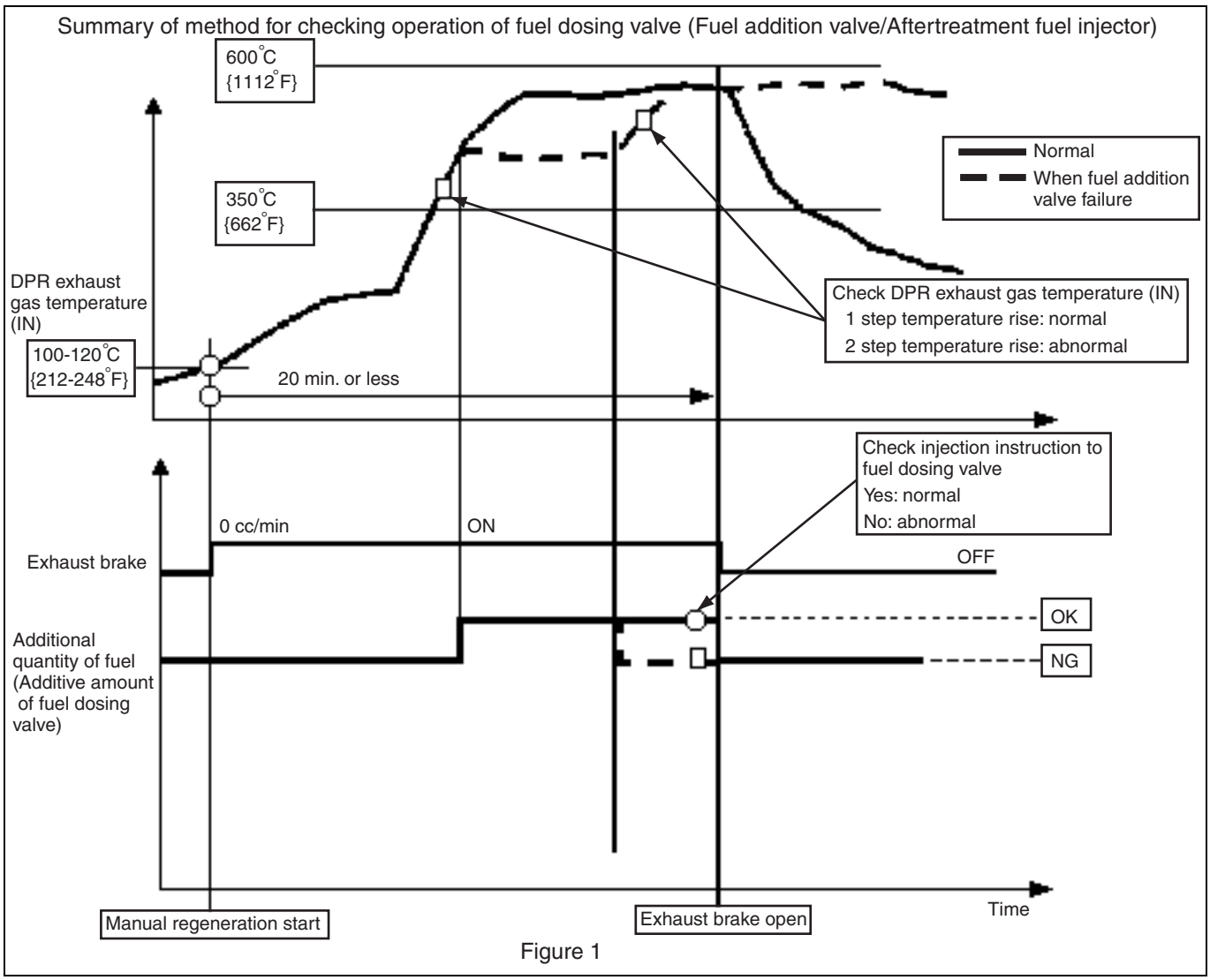


Figure 1

SAPH16F010300888

# DTC: P20DE

EN01H16F01030F03001146

## P20DE: Aftertreatment Fuel Injection Line Pressure Sensor Performance Invalid

INFORMATION

**1. Technical description**

**<Description of malfunction>**

- The engine ECU detected abnormality in the fuel pressure of the fuel pipe (for fuel addition valve/aftertreatment fuel injector).

**2. DTC set condition**

(1) DTC detection condition

- The engine revolution is in the range of 1,500 to 3,000 r/min.
- The difference between the target fuel pressure and the actual fuel pressure is 1 MPa or less.

(2) Judgment criteria

- Fuel pressure for aftertreatment: The difference between the predicted fuel pressure and the actual fuel pressure remains at 0.5 MPa or more for 20 seconds.

**3. Reset condition**

- Immediately after normal status is resumed

**4. Indication, warning or system control regulation when the DTC is set.**

- MIL: ON
- SVS light: OFF

**5. Symptoms on the vehicle when the DTC is set**

**<Symptoms on the vehicle due to backup control (fail safe function)>**

- –

**<Symptoms on the vehicle due to malfunction>**

- –

**6. Pre-inspection work**

- Check that the battery voltage is in the normal range.

**7. After-inspection work**

- Clear all past DTCs.
- Check that no DTC is detected after test drive.

**8. Estimated failure factors**

- Abnormality in characteristics of engine speed main sensor (crankshaft position sensor)
- Fault in pressure feed of fuel pump
- Fuel leakage (loose joint bolt), clogging, crush, and wrong assembly in fuel pipe (for aftertreatment)

## INSPECTION PROCEDURE: P20DE

| 1 | Check the DTC detected 1 [HINO DX II ] |
|---|---|

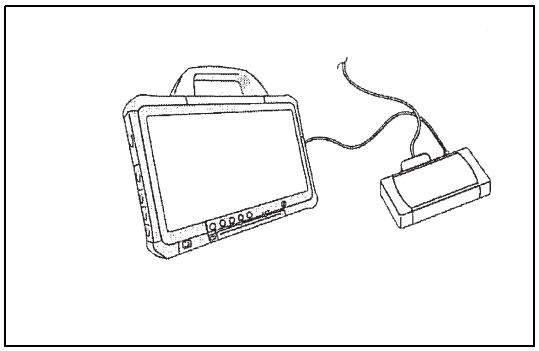

SAPH16F010300889

1. Set the starter switch to the "LOCK" position.
2. Connect the diagnostic system (HINO DX II ) to the vehicle.
3. Set the starter switch to the "ON" position.
4. Select [Engine] on the HINO DX II screen and check if any DTC listed below other than P20DE has been detected.P016E, P016F, P0335, P0336

**Has a DTC other than P20DE been detected?**

**YES**

**Perform the relevant DTC-specific trouble-shooting.**

**NO**

**Go to step 2.**

| 2 | Inspect the aftertreatment fuel injection line pressure sensor connector |
|---|---|

1. Inspect the aftertreatment fuel injection line pressure sensor connector for improper connection (improper fitting and defective contact).

**Was any failure found?**

**YES**

**Connect securely, repair if necessary. Perform "After-inspection work" of INFORMATION section.**

**NO**

**Go to step 3.**

| 3 | Inspect the fuel pipe (for fuel addition valve/Aftertreatment fuel injector) |
|---|---|

1. Check if any of the following defects is found in the pipe between the fuel pump and the fuel dosing valve.

- Fuel leakage (loose joint bolt)
- Clogging
- Crush
- Wrong assembly

2. Bleed air from the fuel pipe and also check that there is no clogging in the pipe.

**<Inspection procedure>**
(1) Set the starter switch to the "ON" position.
(2) Loosen the joint bolt.
(3) Slowly push the feed pump until fuel comes out.

**⚠ CAUTION**
**Use care, as a large amount of fuel may come out if the feed pump is pushed excessively.**

**Was any failure found?**

**YES**

**Repair or replace the defective part.**
**After repair or replacement, bleed air from the pipe and perform DPR manual regeneration.**
**Perform "After-inspection work" of INFORMATION section.**

**NO**

**Go to step 4.**

| 4 | Check the DTC detected 2 [HINO DX II ] |
|---|---|

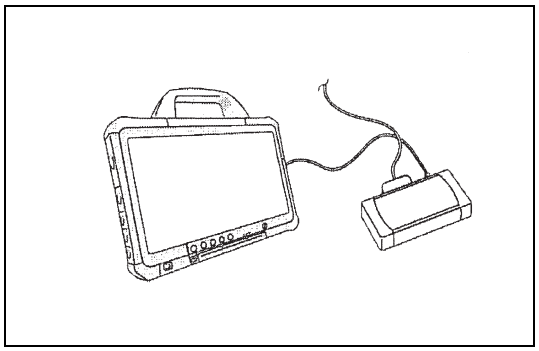

SAPH16F010300890

1. Perform DPR manual regeneration.
2. After completion of regeneration, reload the DTC and check if the DTC P20DE has been detected.

**Has DTC P20DE been detected?**

**YES**

**Replace the aftertreatment fuel injection line pressure sensor.**
**Perform "After-inspection work" of INFORMATION section.**

**NO**

**Procedure completed.**
**Perform "After-inspection work" of INFORMATION section.**

# DTC: P20DF

EN01H16F01030F03001147

## P20DF: Aftertreatment Fuel Injection Line Pressure Sensor Signal Too Low

INFORMATION

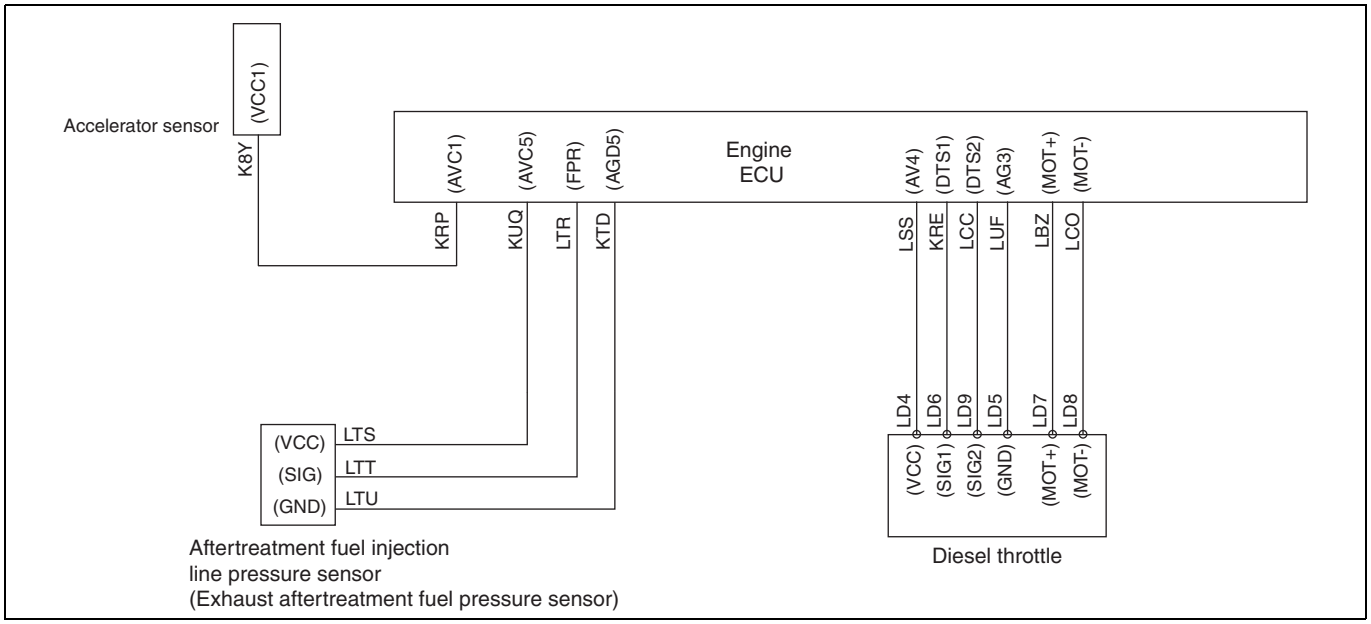


SAPH16F010300891

**1. Technical description**

- The engine ECU detected abnormality in the aftertreatment fuel injection line pressure sensor (Exhaust aftertreatment fuel pressure sensor).

**<Description of malfunction>**

- Malfunction of the aftertreatment fuel injection line pressure sensor, harness disconnection, and GND short circuit are likely to have occurred.

**2. DTC set condition**

(1) DTC detection condition

- Starter switch ON.
- The battery voltage is in the range of 10 – 16 V.
- The engine is stopped, or the engine revolution remains at 500 r/min or more for at least 5 seconds.

(2) Judgment criteria

- Output of the aftertreatment fuel injection line pressure sensor remains at 0.15 V (-0.18 MPa) or less for at least 3 seconds.

**3. Reset condition**

- After normal status is resumed

**4. Indication, warning or system control regulation when the DTC is set.**

- MIL: ON
- SVS light: OFF

**5. Symptoms on the vehicle when the DTC is set**

**<Symptoms on the vehicle due to backup control (fail safe function)>**

- –

**<Symptoms on the vehicle due to malfunction>**

- –

**6. Pre-inspection work**

- Check that the battery voltage is in the normal range.

**7. After-inspection work**

- Clear all past DTCs.
- Check that no DTC is detected after test drive.

**8. Estimated failure factors**

- Abnormality in resistance of the sensor
- Harness disconnection or short circuit
- Defective contact and improper fitting of the connector
- Abnormality in the power supply or internal circuit of the engine ECU sensor

## INSPECTION PROCEDURE: P20DF

| 1 | Inspect the aftertreatment fuel injection line pressure sensor connector |
|---|---|

1. Inspect the aftertreatment fuel injection line pressure sensor connector for improper connection (improper fitting and defective contact).

**Was any failure found?**

| YES | NO |
|---|---|
| **Connect securely, repair if needed.<br>Perform "After-inspection work" of INFORMATION section.** | **Go to step 2.** |

| 2 | Inspect the aftertreatment fuel injection line pressure sensor |
|---|---|

1. Inspect the aftertreatment fuel injection line pressure sensor for improper installation.
2. Check the sensing area of the aftertreatment fuel injection line pressure sensor for dirt, clogging, and damage.

**Was any failure found?**

| YES | NO |
|---|---|
| **Clean the sensing area and install the sensor properly. If damage is found, replace the sensor.<br>Perform "After-inspection work" of INFORMATION section.** | **Go to step 3.** |

| 3 | Inspect the aftertreatment fuel injection line pressure sensor wire harness for short circuit |
|---|---|

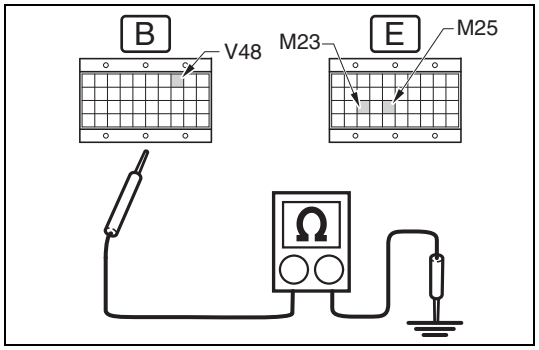

SAPH16F010300892

1. Set the starter switch to the "LOCK" position.
2. Connect the signal check harness to the engine ECU harness on the vehicle-side. (Do not connect to the ECU.)
3. Disconnect the connector on the aftertreatment fuel injection line pressure sensor.
4. Using the electrical tester, measure the resistance between the terminals of the engine ECU (signal check harness) and ground.

| Measurement conditions | Tester connections | Standard values |
|---|---|---|
| **Starter switch: LOCK** | **Engine ECU (signal check harness) FPR(V48) – Ground AVC5(M25) – Ground AGD5(M23) – Ground** | **∞ Ω** |

**Is the measured value within the standard values?**

**YES**

**Go to step 4.**

**NO**

**Repair or replace the wire harness. Perform "After-inspection work" of INFORMATION section.**

| 4 | Inspect the aftertreatment fuel injection line pressure sensor wire harness for disconnection |
|---|---|

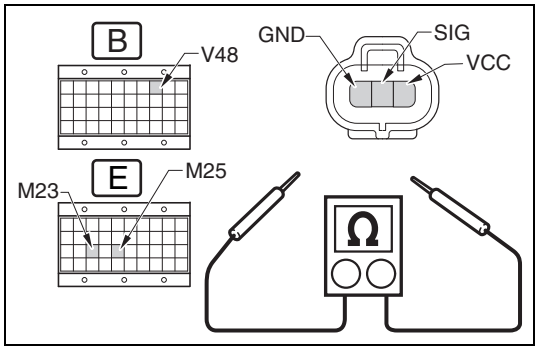

SAPH16F010300893

1. Using the electrical tester, measure the resistance from the engine ECU (signal check harness) to the terminals of the aftertreatment fuel injection line pressure sensor vehicle-side connector.

| Measurement conditions | Tester connections | Standard values |
|---|---|---|
| **Starter switch: LOCK** | **Engine ECU (signal check harness) – Aftertreatment fuel injection line pressure sensor vehicle-side connector FPR(V48) – SIG AVC5(M25) – VCC AGD5(M23) – GND** | **1 Ω** |

**Is the measured value within the standard values?**

**YES**

**Go to step 5.**

**NO**

**Repair or replace the wire harness.**
**Perform "After-inspection work" of INFORMATION section.**

## 5 Inspect the sensor power supply

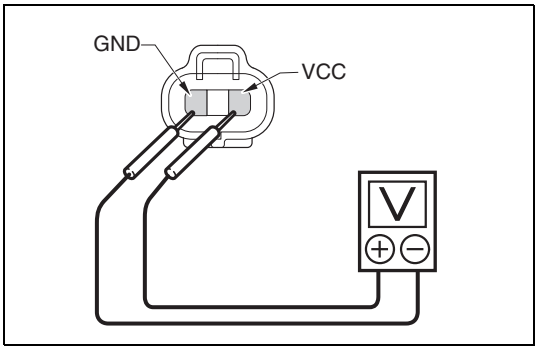


SAPH16F010300894

1. Set the starter switch to the "ON" position.
2. Using the electrical tester, measure the voltage between the terminals of the aftertreatment fuel injection line pressure sensor vehicle-side connector.

| Measurement conditions | Tester connections | Standard values |
|---|---|---|
| Starter switch: ON | Aftertreatment fuel injection line pressure sensor vehicle-side connector<br>VCC – GND | 4.5 V – 5.5 V |

**Is the measured value within the standard values?**

**YES**

**Go to step 6.**

**NO**

**Malfunction of engine ECU sensor power supply 2(Inspect P0652.)**
**Perform "After-inspection work" of INFORMATION section.**

| 6 | Check the DTC detected [HINO DX II ] |
|---|---|

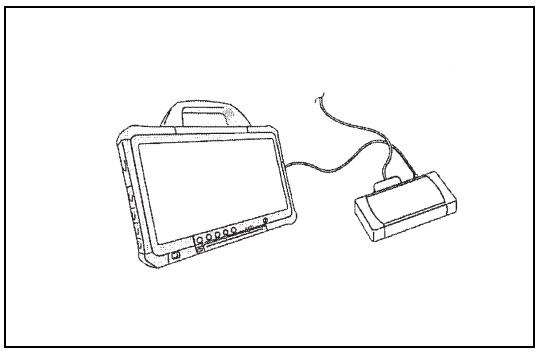

SAPH16F010300895

1. Warm up the engine. (Coolant temperature: 80 °C {176 °F} or more)
2. Stop the engine and set the starter switch to the "LOCK" position.
3. Connect the vehicle to HINO DX II .
4. Set the starter switch to the "ON" position.
5. On the screen of the diagnostic system, read the detected DTC.

**Has DTC P20DE been detected?**

**YES**

**Replace the aftertreatment fuel injection line pressure sensor.**
**Perform "After-inspection work" of INFORMATION section.**

**NO**

**Procedure completed.**
**Perform "After-inspection work" of INFORMATION section.**

# DTC: P20E0

EN01H16F01030F03001148

## P20E0: Aftertreatment Fuel Injection Line Pressure Sensor Signal Too High

INFORMATION

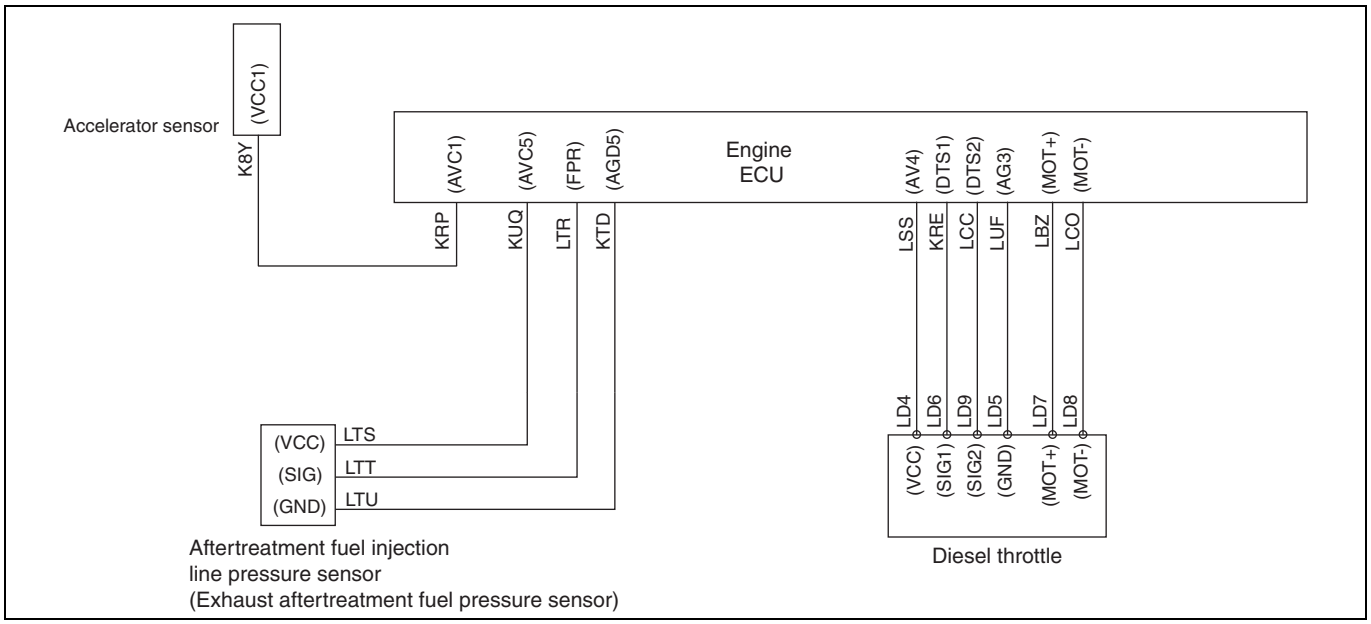


SAPH16F010300896

**1. Technical description**

- The engine ECU detected abnormality in the aftertreatment fuel injection line pressure sensor (Exhaust aftertreatment fuel pressure sensor).

**<Description of malfunction>**

- Malfunction of the aftertreatment fuel injection line pressure sensor and harness +B short circuit are likely to have occurred.

**2. DTC set condition**

(1) DTC detection condition

- Starter switch ON.
- Battery voltage is in the range of 10 V to 16 V.
- The engine is stopped, or the engine revolution remains at 500 r/min or more for at least 5 seconds.

(2) Judgment criteria

- Output of the aftertreatment fuel injection line pressure sensor remains at 4.54 V (2.02 MPa) or more for at least 3 seconds.

**3. Reset condition**

- After normal operation is restored.

**4. Indication, warning or system control regulation when the DTC is set.**

- MIL: ON
- SVS light: OFF

**5. Symptoms on the vehicle when the DTC is set**

**<Symptoms on the vehicle due to backup control (fail safe function)>**

- –

**<Symptoms on the vehicle due to malfunction>**

- –

**6. Pre-inspection work**

- Check that the battery voltage is in the normal range.

**7. After-inspection work**

- Clear all past DTCs.
- Check that no DTC is stored after test drive.

**8. Estimated failure factors**

- Abnormality in resistance of the sensor
- Harness disconnection or short circuit
- Defective contact and improper fitting of the connector
- Abnormality in the power supply or internal circuit of the engine ECU sensor

## INSPECTION PROCEDURE: P20E0

| 1 | Inspect the aftertreatment fuel injection line pressure sensor connector. |
|---|---|

1. Inspect the aftertreatment fuel injection line pressure sensor connector for improper connection (improper fitting and detective contact).

**Was any failure found?**

| YES | NO |
|---|---|
| **Connect securely, repair if needed.<br>Perform "After-inspection work" of INFORMATION section.** | **Go to step 2.** |

| 2 | Inspect the aftertreatment fuel injection line pressure sensor |
|---|---|

1. Inspect the aftertreatment fuel injection line pressure sensor for improper installation.
2. Check the sensing area of the aftertreatment fuel injection line pressure sensor for dirt, clogging, and damage.

**Was any failure found?**

| YES | NO |
|---|---|
| **Clean the sensing area and install the sensor properly. If damage is found, replace the sensor.<br>Perform "After-inspection work" of INFORMATION section.** | **Go to step 3.** |

| 3 | Inspect the aftertreatment fuel injection line pressure sensor wire harness for short circuit |
|---|---|

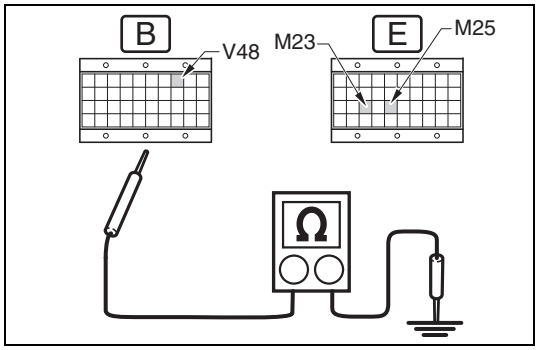

SAPH16F010300897

1. Set the starter switch to the "LOCK" position.
2. Connect the signal check harness to the engine ECU harness on the vehicle-side. (Do not connect to the ECU)
3. Disconnect the connector on the aftertreatment fuel injection line pressure sensor.
4. Using the electrical tester, measure the resistance between the terminals of the engine ECU (signal check harness) and ground.

| Measurement conditions | Tester connections | Standard values |
|---|---|---|
| **Starter switch: LOCK** | **Engine ECU (signal check harness) FPR(V48) – Ground AVC5(M25) – Ground AGD5(M23) – Ground** | **∞ Ω** |

**Do the measurements meet the standard value?**

**YES**

**Go to step 4.**

**NO**

**Repair or replace the harness. Perform "After-inspection work" of INFORMATION section.**

| 4 | Inspect the aftertreatment fuel injection line pressure sensor wire harness for disconnection |
|---|---|

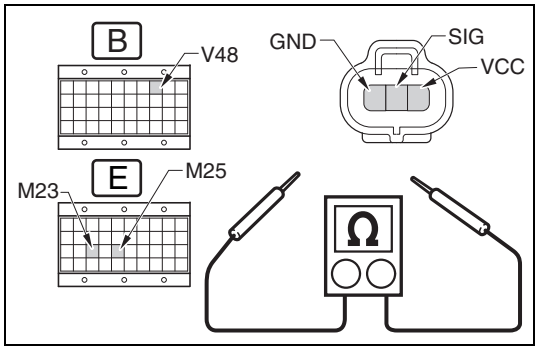

SAPH16F010300898

1. Using the electrical tester, measure the resistance from the engine ECU (signal check harness) to the terminals of the aftertreatment fuel injection line pressure sensor vehicle-side connector.

| Measurement conditions | Tester connections | Standard values |
|---|---|---|
| **Starter switch: LOCK** | **Engine ECU (signal check harness) – Aftertreatment fuel injection line pressure sensor vehicle-side connector FPR(V48) – SIG AVC5(M25) – VCC AGD5(M23) – GND** | **1 Ω** |

**Do the measurements meet the standard value?**

| YES | NO |
|---|---|
| **Go to step 5.** | **Repair or replace the wire harness. Perform "After-inspection work" of INFORMATION section.** |

## 5 Inspect the sensor power supply

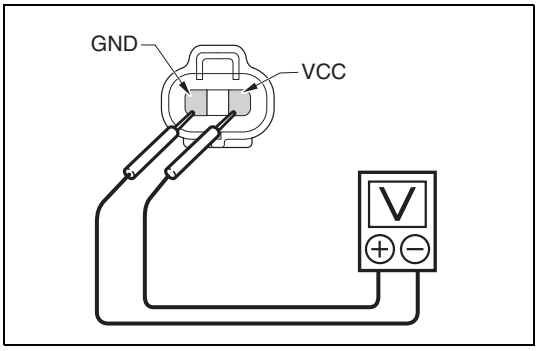

SAPH16F010300899

1. Set the starter switch to the "ON" position.
2. Using the electrical tester, measure the voltage between the terminals of the aftertreatment fuel injection line pressure sensor vehicle-side connector on the vehicle-side.

| Measurement conditions | Tester connections | Standard values |
|---|---|---|
| **Starter switch: ON** | **Aftertreatment fuel injection line pressure sensor vehicle-side connector on the vehicle-side VCC – GND** | **4.5 – 5.5 V** |

**Do the measurements meet the standard value?**

| YES | NO |
|---|---|
| **Go to Step 6.** | **Malfunction of engine ECU sensor power supply 2 (Inspect P0653.)** |

| 6 | Check the DTC detected [HINO DX II ] |
|---|---|

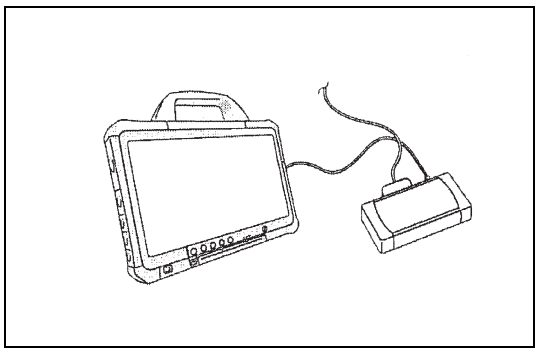

SAPH16F010300900

1. Perform engine warm up. (engine coolant temperature: 80 °C {176 °F} or more)
2. Stop the engine and set the starter switch to the "LOCK" position.
3. Connect the vehicle to HINO DX II .
4. Set the starter switch to the "ON" position.
5. On the screen of the diagnostic system, read the detected DTC.

**Has DTC P20E0 been detected?**

**YES**

**Replace the aftertreatment fuel injection line pressure sensor.**
**Perform "After-inspection work" of INFORMATION section.**

**NO**

**Procedure completed.**
**Perform "After-inspection work" of INFORMATION section.**

# DTC: P20EE

EN01H16F01030F03001149

## P20EE: NOx converting catalyst conversion efficiency

INFORMATION

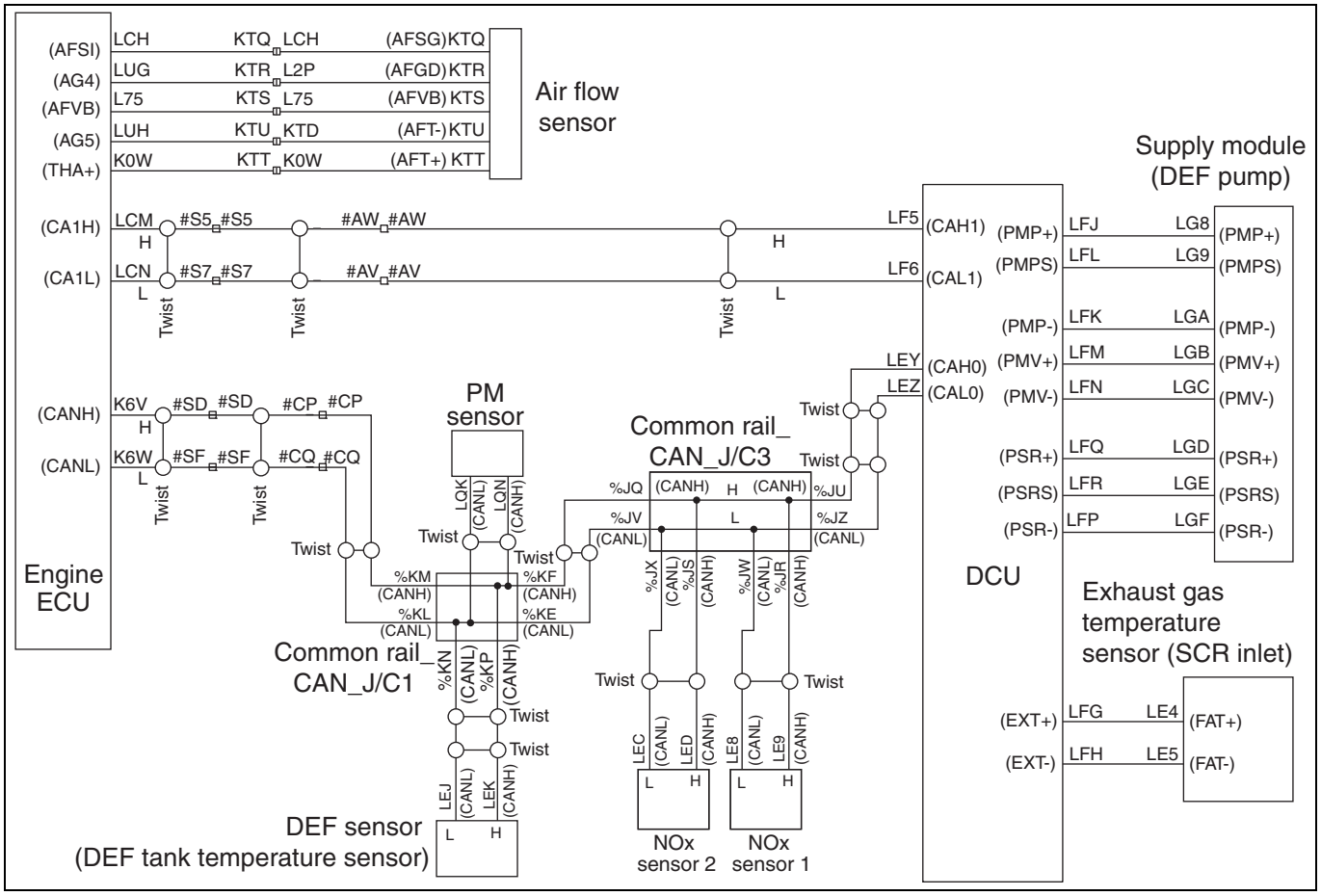


SAPH16F010300901

### 1. Technical description

- Deterioration of SCR catalyst is determined by a decision of a drop in the NOx conversion efficiency and the DEF concentration.
- Conversion efficiency is calculated by upstream and downstream NOx sensors.
- Besides other factors, conversion efficiency may drop due to the increase or decrease of DEF amount supplied to the sensing unit.
- DEF SCR catalyst concentration is measured by a DEF quality sensor.

**<Description of malfunction>**

- Deterioration of DEF SCR catalyst is detected.

### 2. DTC set condition

(1) DTC detection condition

a. Conditions below continue for 5 seconds.
1,000 r/min ≤ Engine speed ≤ 2,500 r/min
Engine speed ≥ 300 r/min for 3 seconds.
30 $mm^3$/st. cyl. ≤ Fuel injection quantity < 150 $mm^3$/st. cyl.
300 kg/h ≤ Exhaust gas mass flow < 1,000 kg/h
210 °C {410 °F} ≤ SCR catalyst temperature < 260 °C {500 °F}
50 ppm ≤ NOx (SCR upstream) < 1,000 ppm
Intake air temperature > -20 °C {-4 °F}
60 % ≤ Ratio of actual $NH_3$ load < 120 %

Calculated HC load < 0.1 g
NOx sensor 1 (SCR upstream) and NOx sensor 2 (SCR downstream) are valid for 121 seconds.
DPF active regeneration not in process.

b. Conditions below continue for 10 seconds.
DEF defrosting completed (DEF take temperature) ≥ -5 °C {23 °F}
Exhaust gas temperature (SCR inlet) > 150 °C {302 °F}
Engine speed ≥ 350 r/min
Vehicle speed > 6.2 mph
11 V < Battery voltage < 32 V
DEF quality sensor is valid.

(2) Judgment criteria
The conditions described below are formed.

a. Calculate Average NOx conversion efficiency from NOx sensor 1 (upstream) and 2 (downstream).
Target NOx conversion efficiency (from DCU) - Average NOx conversion efficiency ≥ 0.99

b. Average DEF concentration > 16 %

**3. Reset condition**

- Immediately after normal operation is restored and SCR-related memory is reset.

**4. Indication, warning or system control regulation when the DTC is set.**

- MIL: ON
- SVS Light: OFF
- Engine output is restricted.
- Vehicle speed is restricted.

**5. Symptoms on the vehicle when the DTC is set**

**<Symptoms on the vehicle due to backup control (fail safe function)>**

- –

**<Symptoms on the vehicle due to malfunction>**

- –

**6. Pre-inspection work**

- Check that the battery voltage is in the normal range.

**7. After-inspection work**

- Clear all past DTCs.
- Form the DTC detection condition.
- Check that no DTC is detected after test drive.

**8. Estimated failure factors**

- Faulty DEF solution reduction
- Harness disconnection or short-circuit
- NOx sensor failure
- Air flow sensor failure
- Exhaust gas temperature sensor (SCR inlet) failure
- DEF quality sensor failure
- SCR catalyst: miscalculation of adsorption amount or HC poisoning

**NOTICE**
**If no trouble causes are found , it can be suspected that the respective DTC was issued because of a temporary fault condition caused by the freezing of the DEF.**

## INSPECTION PROCEDURE: P20EE

| 1 | Check the DTC detected [HINO DX II ] |
|---|---|

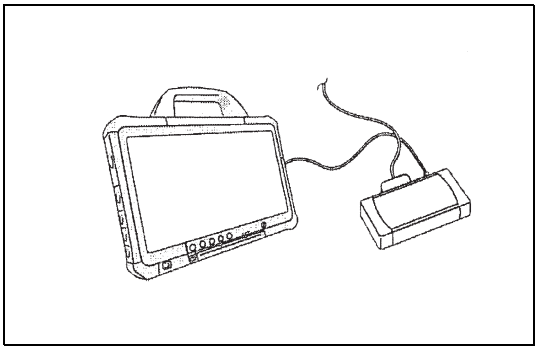

SAPH16F010300902

1. Set the starter switch to the "LOCK" position.
2. Connect the diagnostic system (HINO DX II ) to the vehicle.
3. Set the starter switch to the "ON" position.
4. Select [Engine] on the screen of HINO DX II and check it the DTC P20EE has been detected.

**Has any DTC related to P20EE been detected?**

**YES**

**Go to diagnosis procedure of the related DTC.**
**After repair, go to step 2.**

**NO**

**Go to step 2.**

| 2 | Check the DEF solution |
|---|---|

1. Check the DEF solution concentration.

| Standard values |
|---|
| 32.5 ± 2.5 % |

**Do the measurements meet the standard value?**

**YES**

**Go to step 3.**

**NO**

**Replace the DEF solution.**
**If the DEF concentration is below the standard, drain the DEF solution through the tank drain with the starter switch ON, and then refill the tank with at least 5 liters {1.3 gallons} of DEF. Afterward, drive the vehicle and confirm that the problem does not recur under driving conditions.**
**Perform "After-inspection work" of INFORMATION section.**

| 3 | Inspect the NOx sensor No.1 (SCR upstream) [HINO DX II ] |
|---|---|

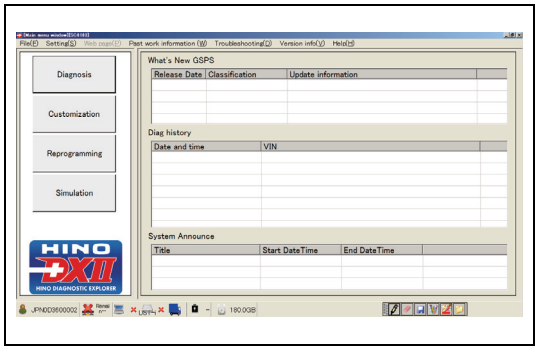


SAPH16F010300903

1. Turn the starter key to the "ON" position.

2. Start DX II .

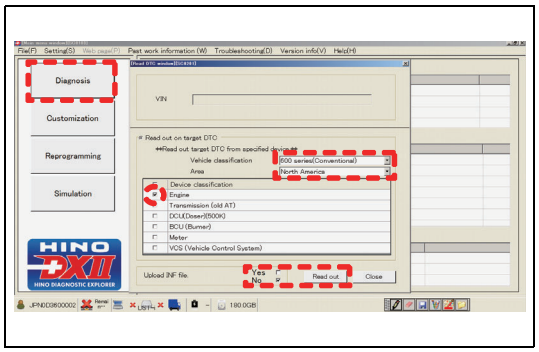


SAPH16F010300904

3. On the DX II window, click [Diagnosis].
Select the vehicle model and region, and check [Engine].
Select either Upload INF file and then [Read out] to read out.

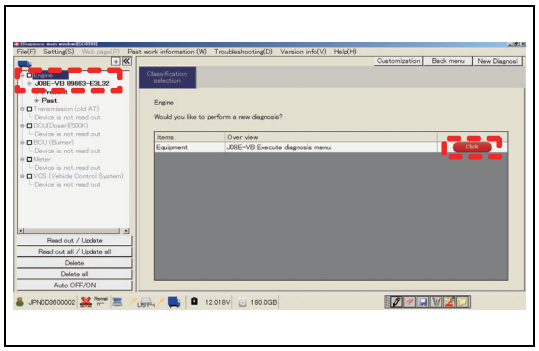


SAPH16F010300905

4. Select [Engine], and press the click button.

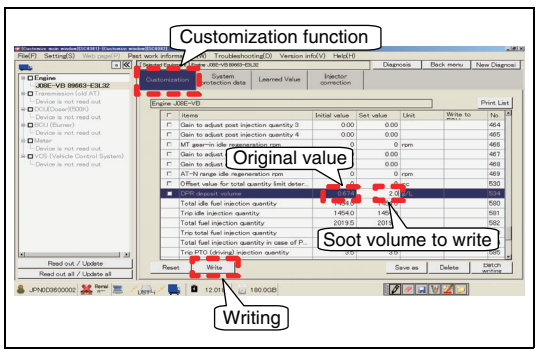


SAPH16F010300906

5. Writing soot volume

**HINT**

**As in the window on the left, write a soot volume [2.0] using the customization function. Record the original value not to forget. The example in the window is [0.674].**

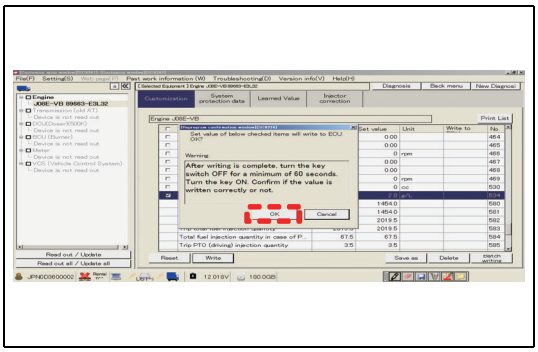


SAPH16F010300907

6. Turn the starter key "OFF" and then "ON" according to the instruction.
Then, click [OK].

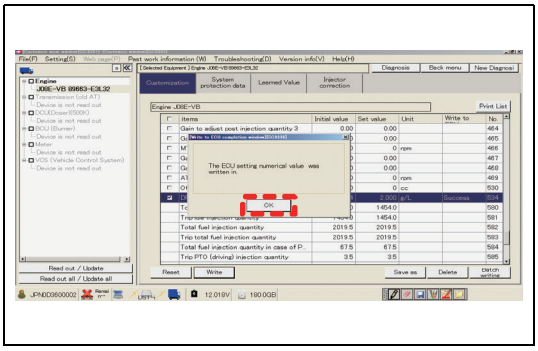


SAPH16F010300908

7. Check that ECU writing has been completed. Click [OK].
Refer to the window on the left.

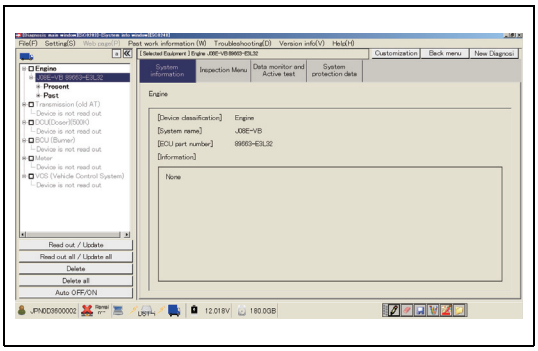

SAPH16F010300909

8. Start monitoring using the data monitoring function of DX II .
Check the output waveform of the NOx sensor on the monitor.

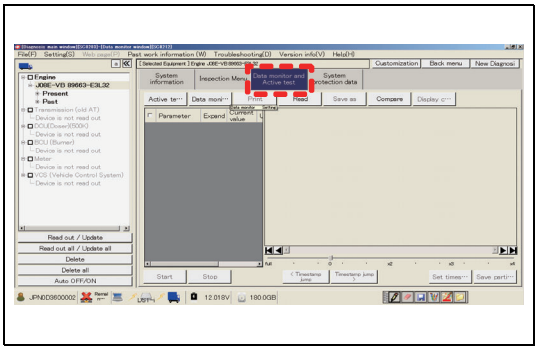

SAPH16F010300910

9. Select [Data monitor and Active test].

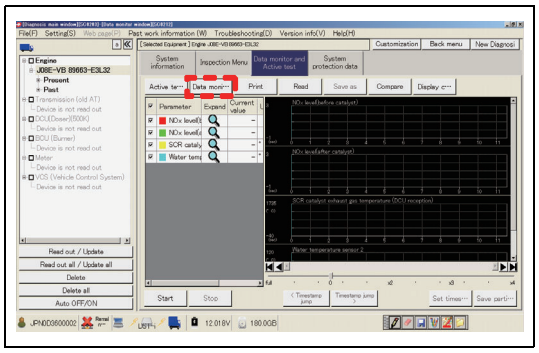

SAPH16F010300911

10. Select [Data monitor Setting].
Refer to the window on the left.

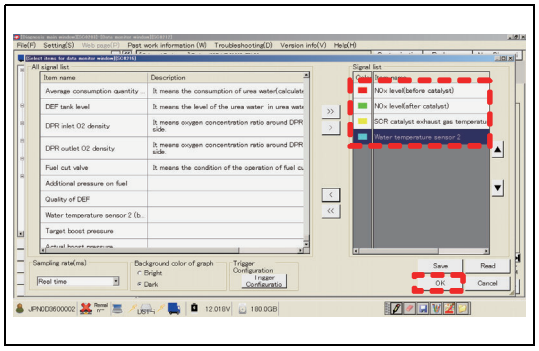

SAPH16F010300912

11. From the selection window on the left, select the following 4 items.
Click OK.

- NOx level (before catalyst)
- NOx level (after catalyst)
- SCR catalyst exhaust gas temperature (DCU reception)
- Water temperature sensor 2

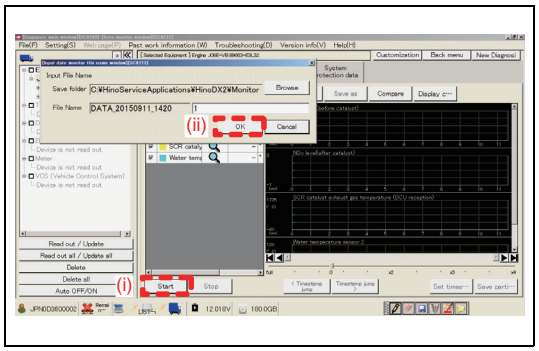

SAPH16F010300913

12. (i) Click [Start] to display the window to check the data storage destination.
(ii) Click [OK] to start data monitoring.

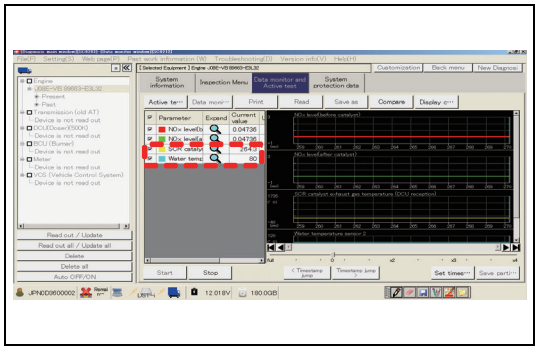

SAPH16F010300914

13. Start the engine.

14. Press the DPR manual regeneration switch of the vehicle.
Start regeneration.

**HINT**

**Since NOx sensor waveform is not detected until the exhaust gas temperature and coolant temperature reach the specified values or more, perform DPR regeneration to increase the exhaust gas temperature and coolant temperature.**

15. On the DX II data monitor, monitor the SCR catalyst temperature, coolant temperature and NOx levels before and after.

16. When the SCR catalyst temperature reaches 250 °C {482 °F} and coolant temperature reaches 70 °C {158 °F}, press the DPR switch (button) to stop the regeneration.

17. Following the determination manual, determine the quality of the sensor according to the NOx sensor waveform data on the monitor.
This is the end of the trouble shooting.

18. Turn the starter key OFF once to stop the engine. Turn it ON again.
19. After completing the trouble shooting, rewrite the soot volume to the original value.
    Select [Engine] as in the window on the left. Click the [Click] button.

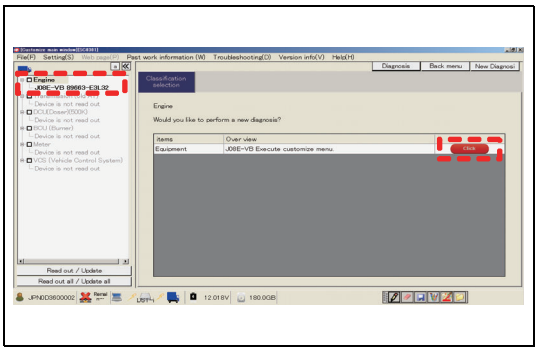

SAPH16F010300915

20. Rewrite the soot volume to the recorded original value.
    Refer to the window on the left.
    For the case of this window, the soot volume to write is [0.6].

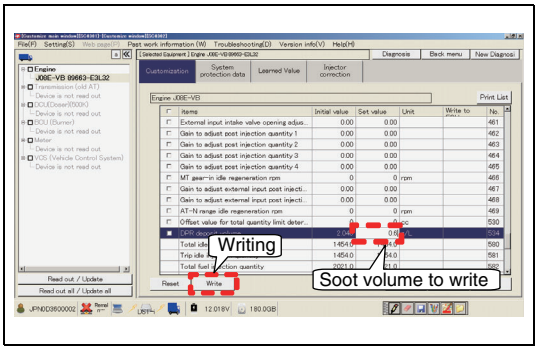


SAPH16F010300916

21. Check that the original soot volume has been written, and click [OK].
    Refer to the window on the left.

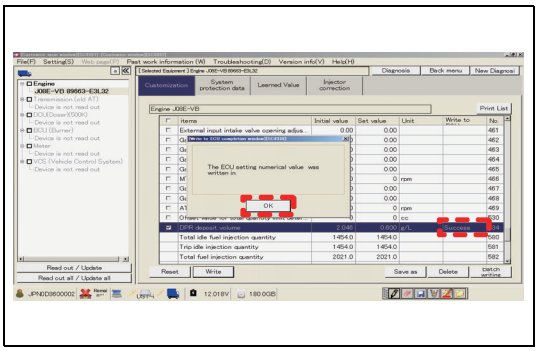

SAPH16F010300917

22. Select [System protection data] to check [Manual regeneration completion frequency]. Click [Reset]. Refer to the window on the left.

**NOTICE**

**Unless this memory reset is performed, the DTC of abnormal regeneration frequency would turn on.**

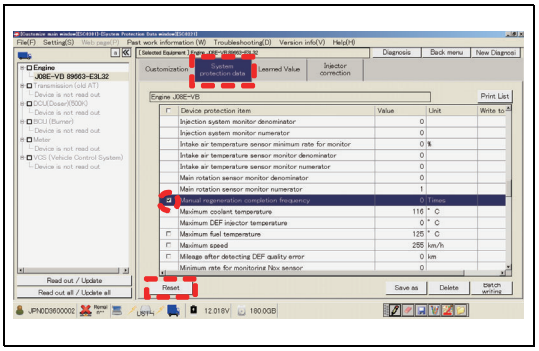

SAPH16F010300918

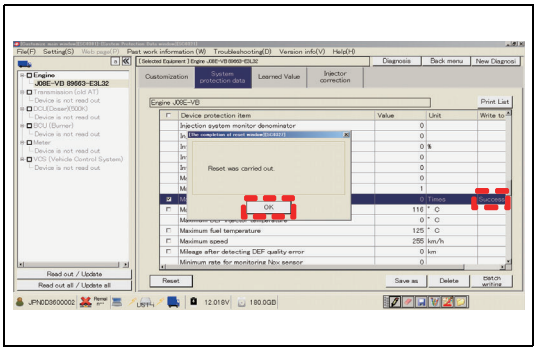

SAPH16F010300919

23. Check that the memory reset has been completed. Click [OK].
Refer to the window on the left.

**NOx controller operates properly?**

**YES**

**Go to step 4.**

**NO**

**Replace NOx sensor 1 (SCR upstream) that does not operate properly.**

## 4 Inspect the NOx sensor No.2 (SCR downstream) [HINO DX II ]

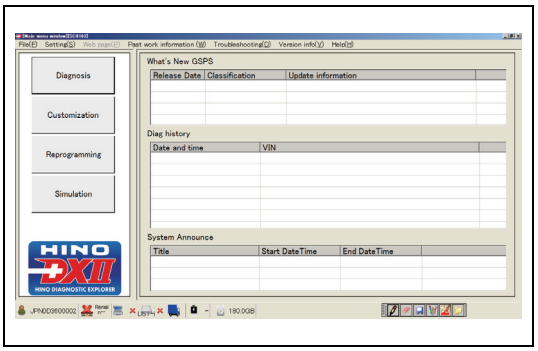


SAPH16F010300920

1. Turn the starter key to the "ON" position.

2. Start DX II .

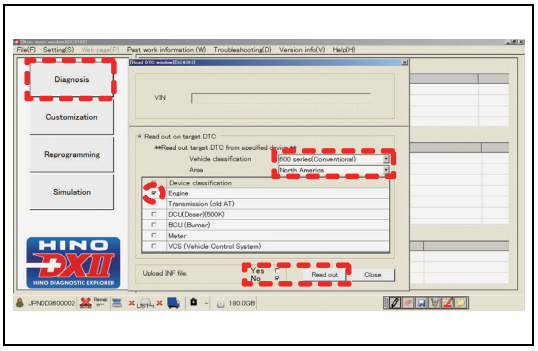


SAPH16F010300921

3. On the DX II window, click [Diagnosis].
Select the vehicle model and region, and check [Engine].
Select either Upload INF file and then [Read out] to read out.

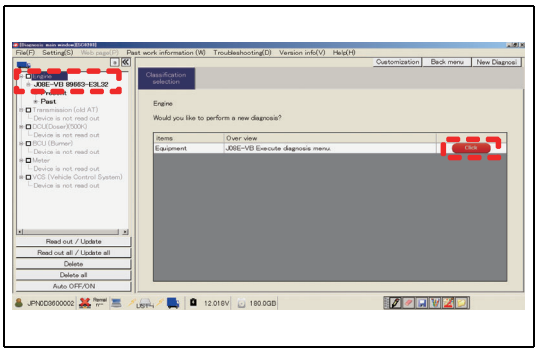

SAPH16F010300922

4. Select [Engine], and press the click button.

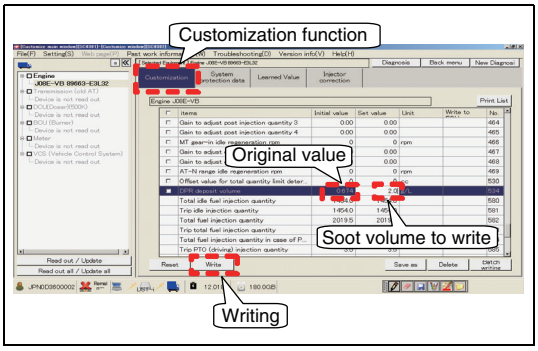


SAPH16F010300923

5. Writing soot volume

**HINT**

**As in the window on the left, write a soot volume [2.0] using the customization function. Record the original value not to forget. The example in the window is [0.674].**

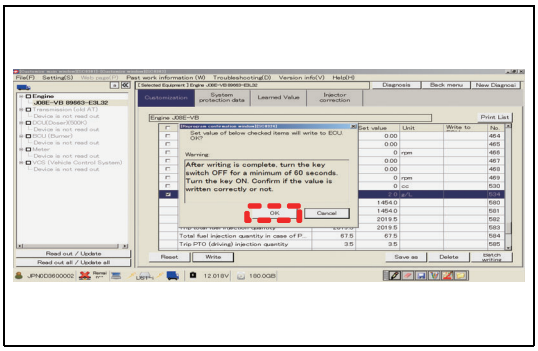

SAPH16F010300924

6. Turn the starter key "OFF" and then "ON" according to the instruction.
Then, click [OK].

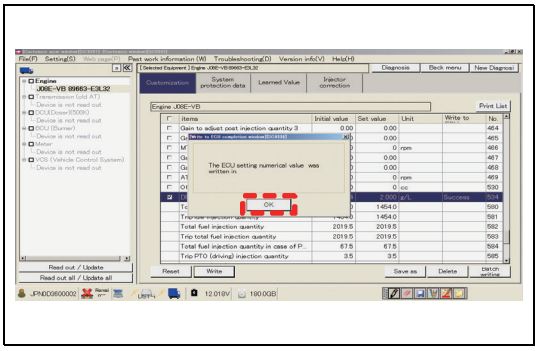

SAPH16F010300925

7. Check that ECU writing has been completed. Click [OK].
Refer to the window on the left.

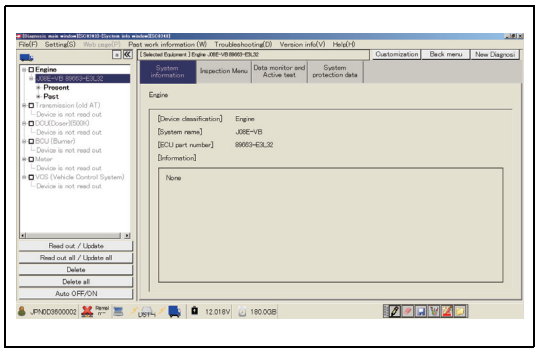

SAPH16F010300926

8. Start monitoring using the data monitoring function of DX II . Check the output waveform of the NOx sensor on the monitor.

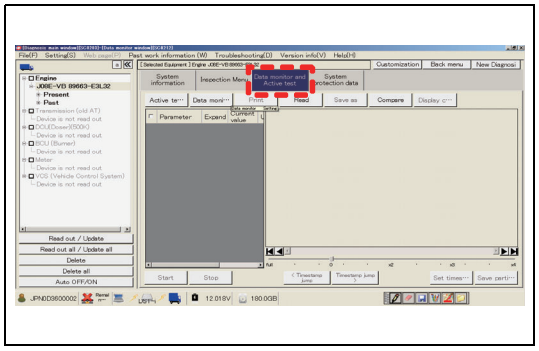

SAPH16F010300927

9. Select [Data monitor and Active test].

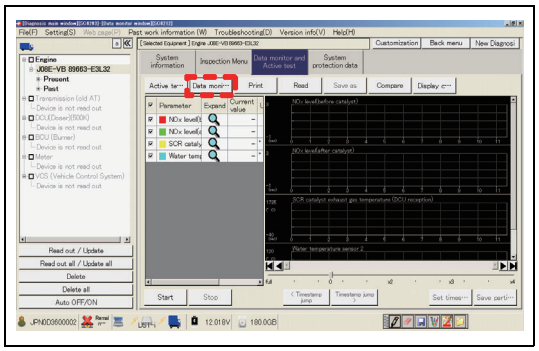

SAPH16F010300928

10. Select [Data monitor Setting]. Refer to the window on the left.

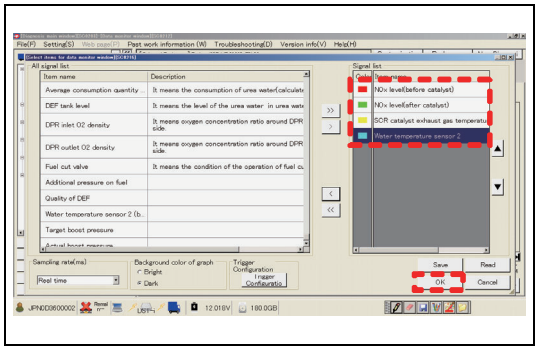

SAPH16F010300929

11. From the selection window on the left, select the following 4 items. Click OK.

- NOx level (before catalyst)
- NOx level (after catalyst)
- SCR catalyst exhaust gas temperature (DCU reception)
- Water temperature sensor 2

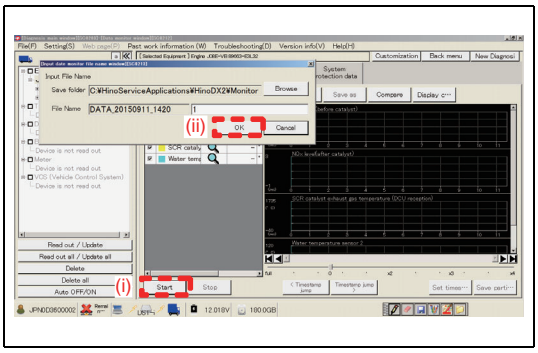


SAPH16F010300930

12. (i) Click [Start] to display the window to check the data storage destination.
    (ii) Click [OK] to start data monitoring.

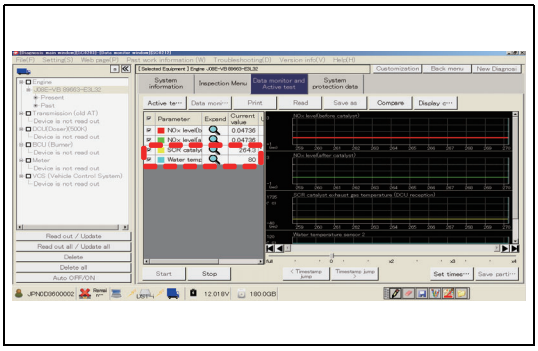

SAPH16F010300931

13. Start the engine.

14. Press the DPR manual regeneration switch of the vehicle.
    Start regeneration.

**HINT**

**Since NOx sensor waveform is not detected until the exhaust gas temperature and coolant temperature reach the specified values or more, perform DPR regeneration to increase the exhaust gas temperature and coolant temperature.**

15. On the DX II data monitor, monitor the SCR catalyst temperature, coolant temperature and NOx levels before and after.

16. When the SCR catalyst temperature reaches 250 °C {482 °F} and coolant temperature reaches 70 °C {158 °F}, press the DPR switch (button) to stop the regeneration.

17. Following the determination manual, determine the quality of the sensor according to the NOx sensor waveform data on the monitor.
    This is the end of the trouble shooting.

18. Turn the starter key OFF once to stop the engine. Turn it ON again.
19. After completing the trouble shooting, rewrite the soot volume to the original value.
    Select [Engine] as in the window on the left. Click the [Click] button.

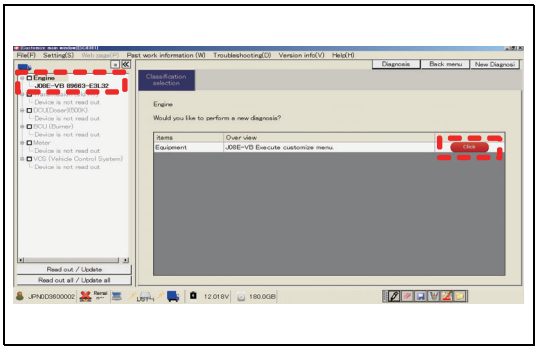

SAPH16F010300932

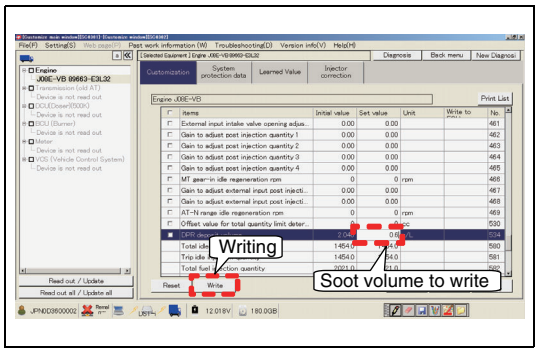


SAPH16F010300933

20. Rewrite the soot volume to the recorded original value.
Refer to the window on the left.
For the case of this window, the soot volume to write is [0.6].

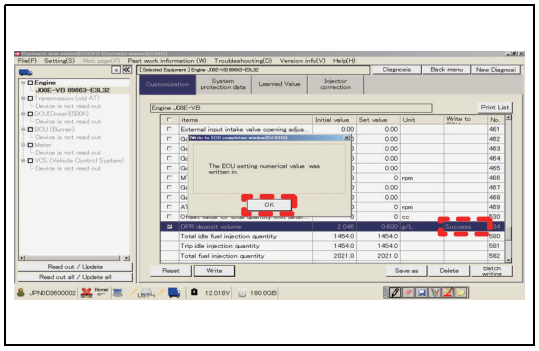

SAPH16F010300934

21. Check that the original soot volume has been written, and click [OK].
Refer to the window on the left.

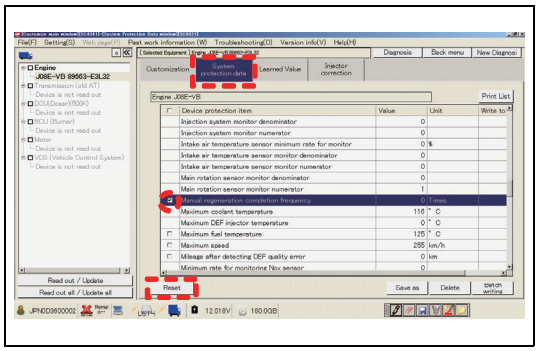

SAPH16F010300935

22. Select [System protection data] to check [Manual regeneration completion frequency]. Click [Reset]. Refer to the window on the left.

**NOTICE**

**Unless this memory reset is performed, the DTC of abnormal regeneration frequency would turn on.**

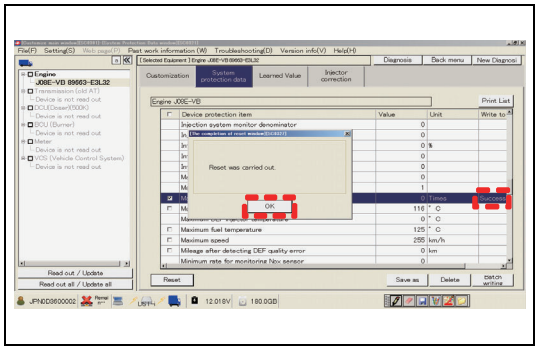

SAPH16F010300936

23. Check that the memory reset has been completed. Click [OK].
Refer to the window on the left.

**NOx controller operates properly?**

YES

**Go to step 5.**

NO

**Replace NOx sensor 2 (SCR downstream) that does not operate properly.**

| 5 | Inspect the DEF tank |
|---|---|

1. Remove the DEF tank from the vehicle.
2. Remove the DEF quality sensor from the DEF tank.
3. Drain the DEF solution from the DEF tank and check the tank interior for the presence of foreign substances.

**Was any failure found?**

YES

**Remove the foreign substances and clean the DEF tank interior.**

**⚠ CAUTION**
**Use fresh water or a diluted DEF solution to clean the DEF tank interior.**

**Perform "After-inspection work" of INFORMATION section.**

NO

**Go to step 6.**

| 6 | Check the DEF quality sensor |
|---|---|

1. Make sure there is no dirt or damage to the DEF quality sensor.

**Was any failure found?**

YES

**Clean the DEF quality sensor.**
**Go to step 6.**

NO

**Go to step 7.**

| 7 | Check the DTC detected (Engine ECU) [HINO DX ll ] |
|---|---|

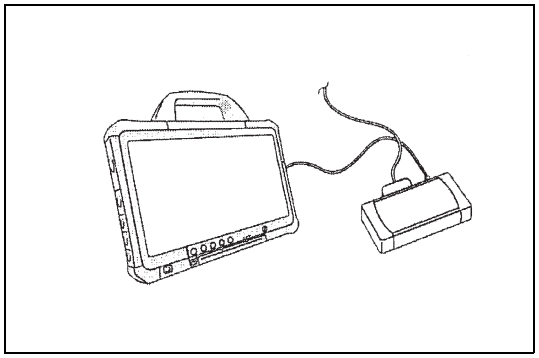

SAPH16F010300937

1. Temporarily install the DEF quality sensor in the DEF tank and mount the tank on the vehicle. (This makes it possible to connect the DEF quality sensor connector.)
2. Fill the tank with the standard concentration of DEF solution.
3. Perform "After-inspection work" of INFORMATION section.
4. Connect the vehicle to HINO DX II .
5. Set the starter switch to the "ON" position.
6. Select [Engine] and check if DTC P20EE has been detected.

**Has DTC P20EE been detected?**

**YES**

**Replace the DEF quality sensor.**
**Perform "After-inspection work" of INFORMATION section.**

**NO**

**Go to step 8.**

| 8 | Inspect the exhaust gas temperature sensor (SCR inlet) connector |
|---|---|

1. Check the connection of the exhaust gas temperature sensor (SCR inlet) connector (Looseness and poor contact).

**Was any failure found?**

**YES**

**Connect securely, repair if needed.**
**Go to step 9.**

**NO**

**Go to step 9.**

| 9 | Inspect the exhaust gas temperature sensor (SCR inlet) |
|---|---|

1. Check the installation of the exhaust gas temperature sensor (SCR inlet).
2. Make sure there is no dirt or damage to the exhaust gas temperature sensor (SCR inlet).

**Was any failure found?**

| YES | NO |
|---|---|
| **Clean the exhaust gas temperature sensor (SCR inlet) and install it properly. If damaged, replace the exhaust gas temperature sensor (SCR inlet).<br>Go to step 10.** | **Go to step 10.** |

| 10 | Inspect the exhaust gas temperature sensor (SCR inlet) unit |
|---|---|

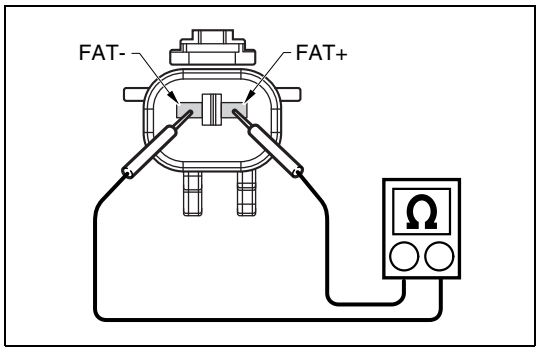

SAPH16F010300938

1. Set the starter switch to the "LOCK" position.
2. Disconnect the exhaust gas temperature sensor (SCR inlet) connector.
3. Use the electrical tester to measure the resistance between the terminals of the exhaust gas temperature sensor (SCR inlet).

| Measurement conditions | Tester connections | Standard values |
|---|---|---|
| **Starter switch: LOCK** | **Exhaust gas temperature sensor (SCR inlet) FAT+ – FAT-** | **20 °C {68 °F}: 220 Ω** |

**Do the measurements meet the standard value?**

| YES | NO |
|---|---|
| **Go to step 11.** | **Replace the exhaust gas temperature sensor (SCR inlet).<br>Go to step 11.** |

| 11 | Inspect for short-circuit in the exhaust gas temperature sensor (SCR inlet) harness |
|---|---|

1. Disconnect the DCU 86P connector.
2. Connect the signal check harness and use the electrical tester to measure the resistance between the terminals of the DCU 86P vehicle-side connector and the ground.

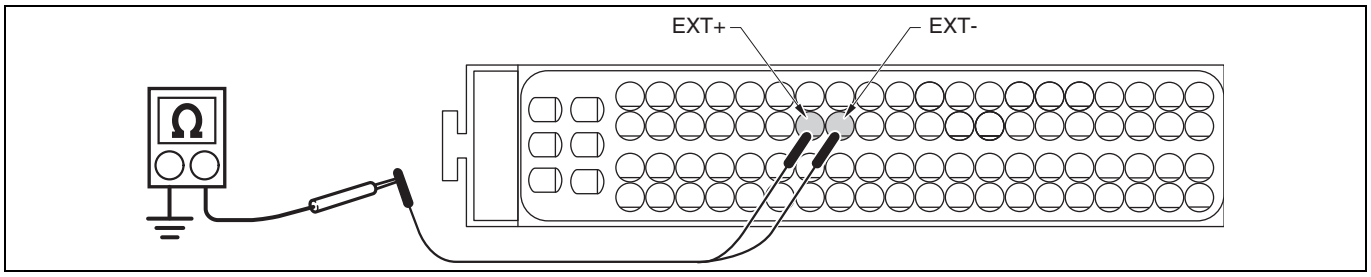


SAPH16F010300939

| Measurement conditions | Tester connections | Standard values |
|---|---|---|
| **Starter switch: LOCK** | **DCU 86P vehicle-side connector EXT+ – Ground EXT- – Ground** | **∞ Ω** |

**Do the measurements meet the standard value?**

**YES**

**Go to step 12.**

**NO**

**Repair or replace the harness.**
**Go to step 12.**

| 12 | Inspect disconnection of the exhaust gas temperature sensor (SCR inlet) harness |
|---|---|

1. Connect the exhaust gas temperature sensor (SCR inlet) connector.
2. Connect the signal check harness and use the electrical tester to measure the resistance between the terminals of the DCU 86P vehicle-side connector.

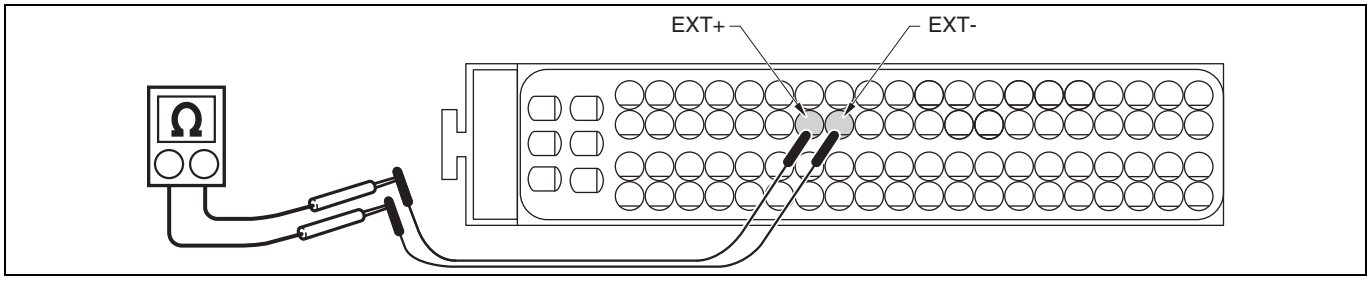


SAPH16F010300940

| Measurement conditions | Tester connections | Standard values |
|---|---|---|
| Starter switch: LOCK | DCU 86P vehicle-side connector EXT+ – EXT- | 20 °C {68 °F}: 220 Ω |

**Do the measurements meet the standard value?**

**YES**

**Go to step 13.**
**If any failure was found at the step 8 - 11, perform "After-inspection work" of INFORMATION section.**

**NO**

**Repair or replace the harness.**
**Perform "After-inspection work" of INFORMATION section.**

| 13 | Check the DEF pipe (pump ↔ injector) |
|---|---|

1. Check the DEF pipe (pressure line) and verify that there are no disconnections, clogging, corrosion, or cracks.

**Was any failure found?**

**YES**

**Repair or replace the faulty part.**
**Perform "After-inspection work" of INFORMATION section.**

**NO**

**Go to step 14.**

| 14 | Inspect the DEF injector 1 [HINO DX II ] |
|---|---|

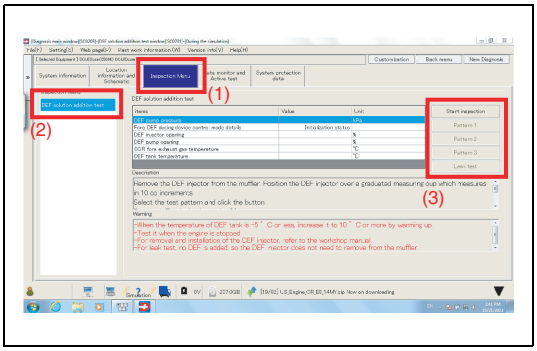


SAPH16F010300941

**NOTICE**
**Prepare a beaker or similar, plus a larger measuring vessel for measuring the DEF to be injected, before perform this inspection. (If the vessel is small, there is dispersion at the time of injection from the injector, and the measuring quantity decreases.)**

1. Set the starter switch to the "LOCK" position.
2. Remove the DEF injector from the muffler.

**HINT**
**Refer to the section "SELECTIVE CATALYTIC REDUCTION (SCR)" in the chapter "EMISSION CONTROL (J08E)" (S5-CJ08E14* or S5-UJ08E14*) for removal and installation of the DEF injector.**

3. Connect the vehicle to HINO DX II .
4. Set the starter switch to the "ON" position.
5. Select [DCU].
6. Select [Inspection Menu] on HINO DX II menu and check the operation of the DEF injector.

**NOTICE**
**When the DEF tank temperature is -5 °C (23 °F) or lower, perform warm-up to raise it to 10 °C (50 °F) or higher.**

<Inspection procedure>
(1) Select [Inspection Menu].
(2) Select [DEF solution addition test].
(3) Perform addition test as instructed on the HINO DX II screen. (Perform all three patterns)

**Is operation normal?**

**YES**

**Re-install the DEF injector on the muffler.**
**Go to step 16.**

**NO**

**Go to step 15.**

| 15 | Inspect the DEF injector 2 [HINO DX II ] |
|---|---|

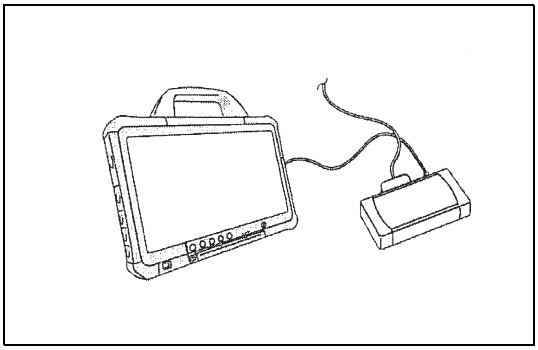

SAPH16F010300942

1. Set the starter switch to the "LOCK" position.
2. Replace the DEF injector with a new one. (Do not install it on the muffler.)
3. Set the starter switch to the "ON" position.
4. Perform DEF addition test as same as step 14.

**Is operation normal?**

**YES**

**Install the new injector on the muffler and complete the check.**
**After installing the injector, idle the engine (for about 10 min.) and on HINO DX II (Data Monitor) verify that the DEF solution is stable between 800 kPa {116 psi} and 1,051 kPa {152 psi}.**
**Perform "After-inspection work" of INFORMATION section.**

**NO**

**Re-install the DEF injector and replace the DEF pipe (pressure line).**
**After replacing the pipe, idle the engine (for about 10 min.) and on HINO DX II (Data Monitor) verify that the DEF solution is stable between 800 kPa {116 psi} and 1,051 kPa {152 psi}.**
**Perform "After-inspection work" of INFORMATION section.**

| 16 | Inspect the air flow sensor connector |
|---|---|

1. Check the connection of the air flow sensor connector (Looseness and poor contact).

**Was any failure found?**

**YES**

**Connect securely, repair if needed.**
**Go to step 17.**

**NO**

**Go to step 17.**

| 17 | Inspect the air flow sensor |
|---|---|

1. Check the installation of the air flow sensor.
2. Make sure there is no dirt or damage to the air flow sensor.

**Was any failure found?**

**YES**

**If dirt, clogging or damage was found in sensing unit, replace the air flow sensor.**
**Go to step 18.**

**NO**

**Go to step 18.**

| 18 | Inspect for short-circuit of the air flow sensor harness |
|---|---|

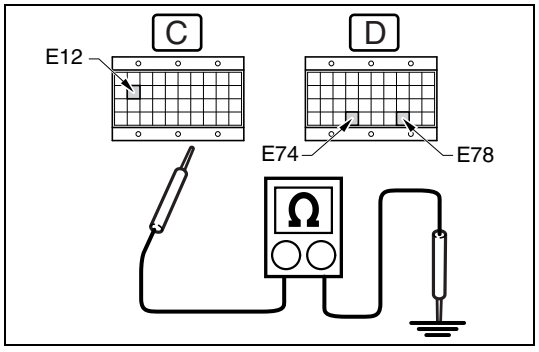

SAPH16F010300943

1. Set the starter switch to the "LOCK" position.
2. Connect the signal check harness to the engine ECU vehicle-side harness. (Do not connect the harness to the ECU.)
3. Disconnect the air flow sensor connector.
4. Use the electrical tester to measure the resistance between the terminals of the engine ECU (signal check harness) and ground.

| Measurement conditions | Tester connections | Standard values |
|---|---|---|
| Starter switch: LOCK | Engine ECU (signal check harness) AFSI(E74) – Ground<br>AG4(E78) –Ground<br>AFVB(E12) – Ground | ∞ Ω |

**Do the measurements meet the standard value?**

**YES**

**Go to step 19.**

**NO**

**Repair or replace the harness.**
**Go to step 19.**

## 19 Inspect disconnection of the air flow sensor harness

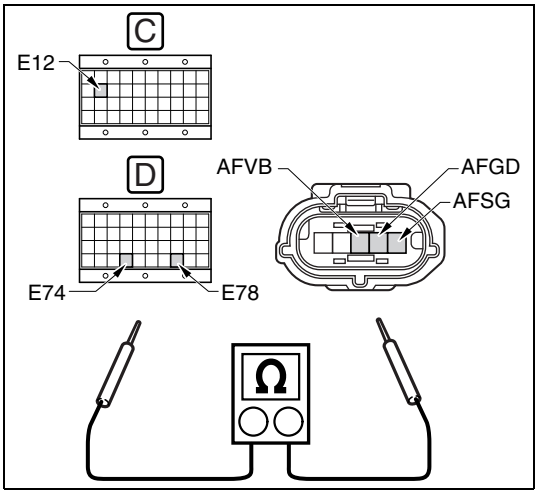

SAPH16F010300944

1. Use the electrical tester to measure the resistance between the terminals of the engine ECU (signal check harness) and air flow sensor vehicle-side connector.

| Measurement conditions | Tester connections | Standard values |
|---|---|---|
| Starter switch: LOCK | Engine ECU (signal check harness) – Air flow sensor vehicle-side connector<br>AFSI(E74) – AFSG<br>AG4(E78) – AFGD<br>AFVB(E12) – AFVB | 1 Ω or less |

**Do the measurements meet the standard value?**

**YES**

**Go to step 20.**

**NO**

**Repair or replace the harness.**
**Go to step 20.**

## 20 Inspect the air flow sensor power supply

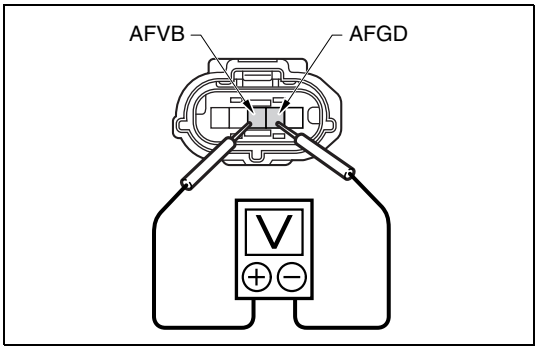

SAPH16F010300945

1. Connect the signal check harness to the engine ECU.
2. Set the starter switch to the "ON" position.
3. Use the electrical tester to measure the voltage between the terminals of the air flow sensor vehicle-side connector.

| Measurement conditions | Tester connections | Standard values |
|---|---|---|
| Starter switch: ON | Air flow sensor vehicle-side connector<br>AFVB – AFGD | 4.5 – 5.5 V |

**Do the measurements meet the standard value?**

**YES**

**Go to step 21.**

**NO**

**Replace the engine ECU.**
**Go to step 21.**

| 21 | Inspect the air flow sensor signal |
|---|---|

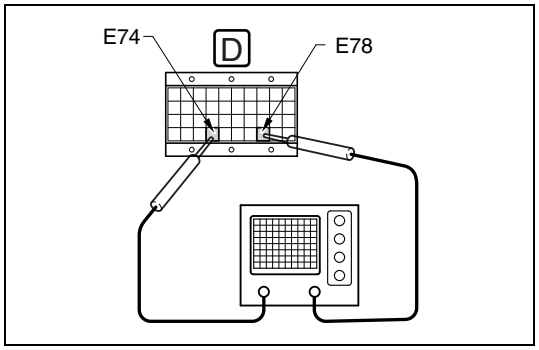

SAPH16F010300946

1. Set the starter switch to the "LOCK" position.
2. Connect the air flow sensor connector.
3. Start the engine.
4. Use the oscilloscope to measure the signal voltage between the terminals in the engine ECU (signal check harness).

| Measurement conditions | Tester connections | Standard values |
|---|---|---|
| After engine warm-up, with engine idling | Engine ECU (signal check harness) AFSI(E74) – AG4(E78) | 5 – 6 kHz |

**Do the measurements meet the standard value?**

**YES**

**Go to step 22.**
**If any failure was found at the step 16 - 20, perform "After-inspection work" of INFORMATION section.**

**NO**

**Replace the air flow sensor.**
**Perform "After-inspection work" of INFORMATION section.**

| 22 | Perform a basic engine check |
|---|---|

1. Perform a basic engine check using the ENGINE BASIC INSPECTION SHEET (ENGINE INSPECTION CHECK SHEET).

**Was any failure found?**

**YES**

**Repair or replace the faulty part.**
**Perform "After-inspection work" of INFORMATION section.**

**NO**

**Go to step 23.**

| 23 | Inspect the exhaust pipe |
|---|---|

1. Make sure there is no soot leakage from the exhaust pipe outlet.

**Was any failure found?**

**YES**

**Replace the DPR filter and the PM sensor.**
**After replacing the filter, execute a DPR manual regeneration and check if no DTC (P20EE) is detected.**
**Perform "After-inspection work" of INFORMATION section.**

**NO**

**Go to step 24.**

| 24 | Inspect the SCR catalyst [HINO DX II ] |
|---|---|

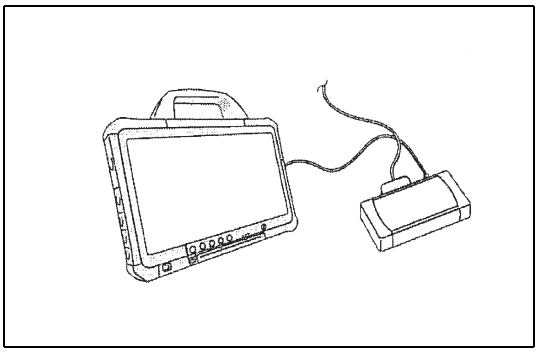

SAPH16F010300947

1. Set the starter switch to the "LOCK" position.
2. Replace the SCR catalyst.
3. Set the starter switch to the "ON" position.
4. Erase the trouble history.
5. Form the DTC detection condition.
6. Select [Engine] and check if P20EE has been detected.

**Has DTC P20EE been detected?**

**YES**

**Replace the engine ECU.**
**Perform "After-inspection work" of INFORMATION section.**

**NO**

**Procedure completed. (SCR catalyst is faulty.)**
**Perform "After-inspection work" of INFORMATION section.**

## Manual for the Verification of the Condition of NOx Sensor

Verify the condition of NOx sensor based on the waveforms illustrated below when checking the level of NOx sensor using DX II .

### Quality Product Example

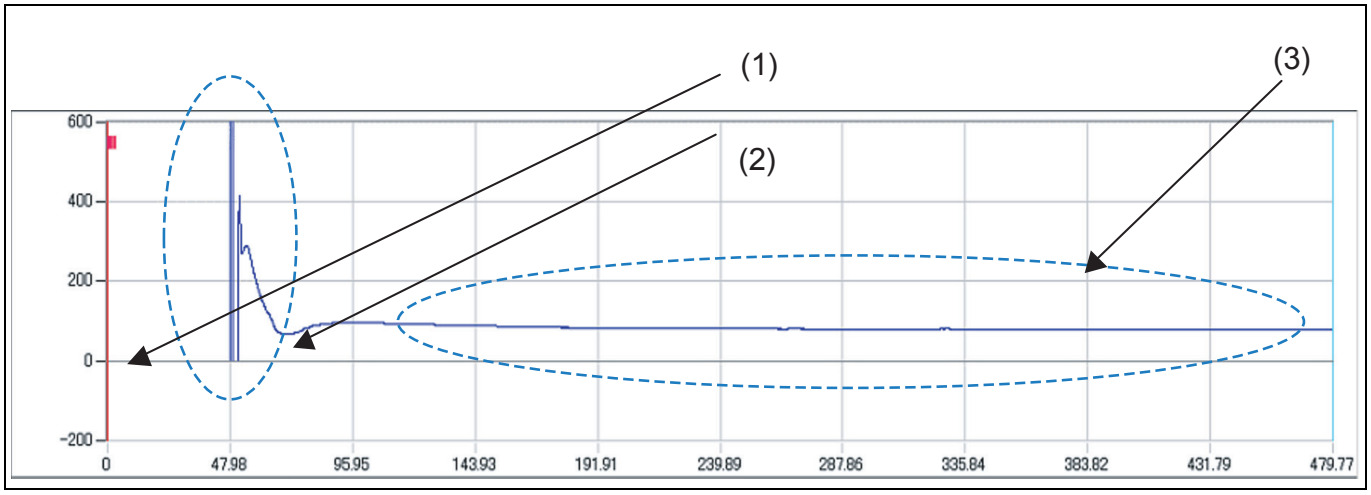


SAPH16F010300948

Judgmental Standard
The data of the level of NOx sensor is below "1" and becomes stable in 5 minutes after the initiation of NOx transmission.

### Characteristics

1. The level of NOx sensor stays around "0" until the indicator on the water temperature meter on the vehicle goes up to the middle, as its data is not being transmitted.
2. It is not a problem if the meter shows a high level of NOx sensor for an instant moment when the data of the level of NOx sensor begins to be transmitted.
3. The data of the level of NOx sensor becomes stable at below "1" in about 5 minutes after the initiation of NOx transmission. (Make sure to set the exhaust brake to "OFF")

### Failed Product Examples

The level of NOx sensor staying at a elevated level.
The condition in which the level of NOx sensor stays above "1" for longer than 5 minutes after the initiation of NOx transmission is called "elevated NOx level" and NOx sensors with this condition is considered as defective.

<Elevated NOx Level CASE1>

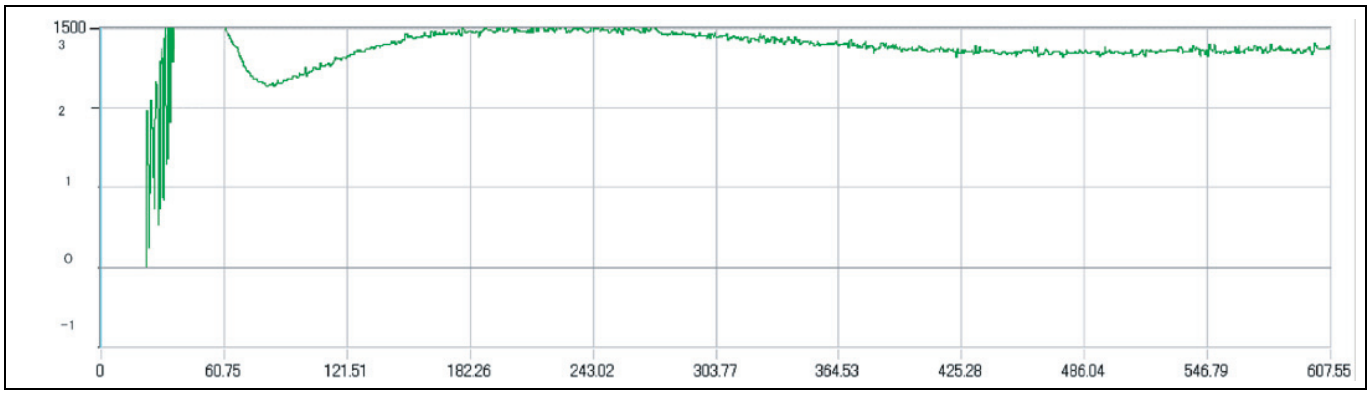


SAPH16F010300949

Considered defective as the level of NOx sensor is above "1"

<Elevated NOx Level CASE2>

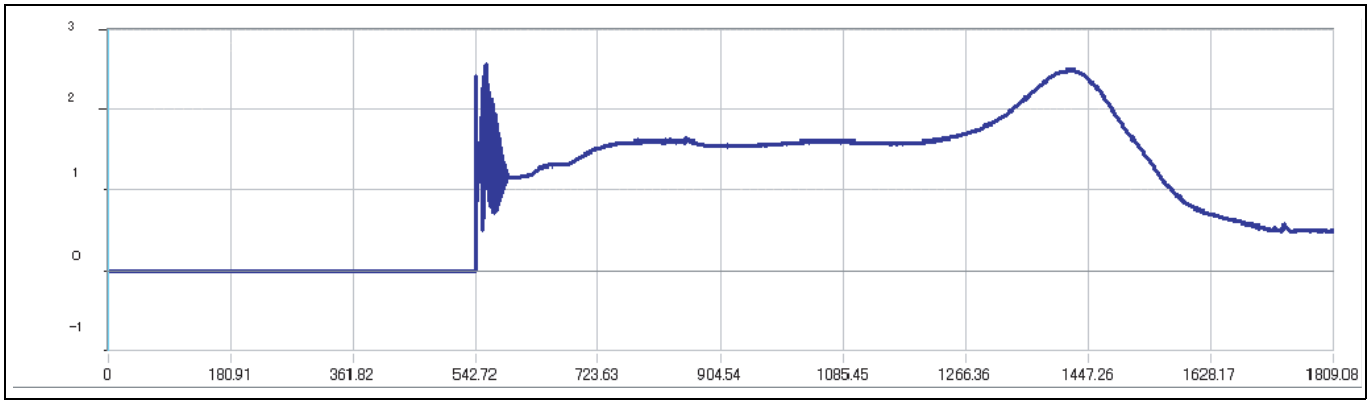


SAPH16F010300950

Considered defective as the level of NOx sensor mostly stays above "1" for longer than 5 minutes after the initiation of NOx transmission, although it goes down to below "1" at the end of the graph.

**Oscillation**

The condition in which the level of NOx sensor is unstable is called "Oscillation" and considered as defective.

<Oscillation CASE1>

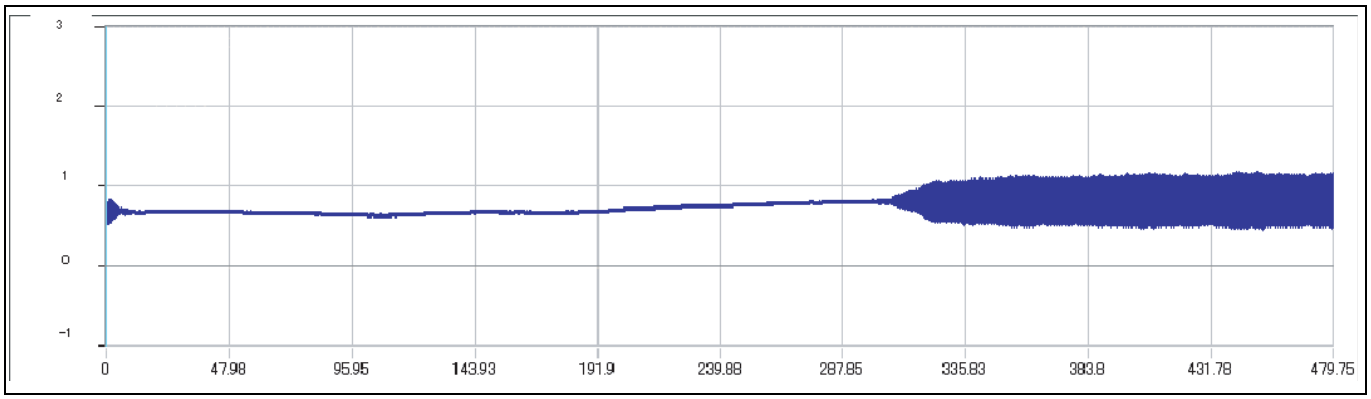


SAPH16F010300951

Considered defective as the level of NOx sensor is not stable all the way through, although it stays below "1".

<Oscillation CASE2>

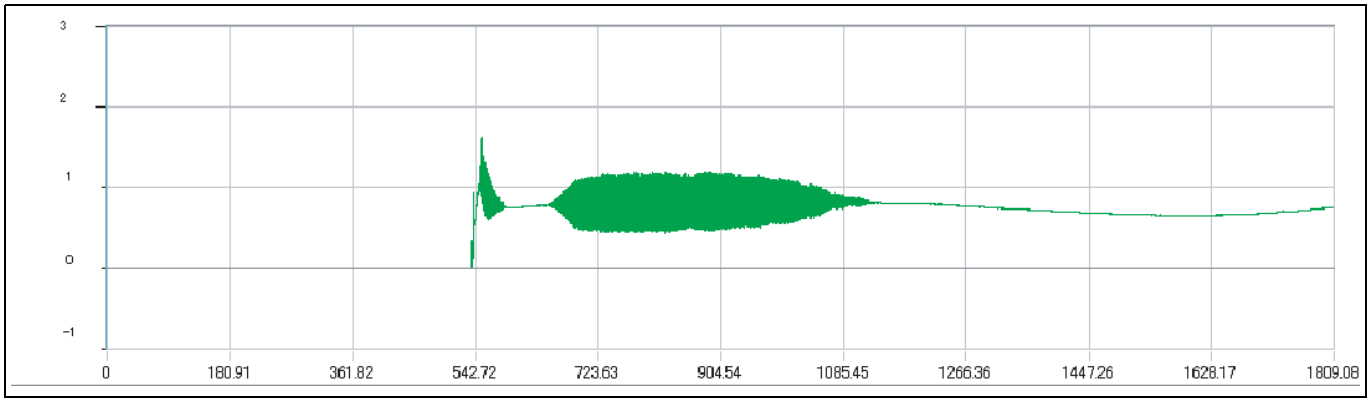


SAPH16F010300952

Considered defective as the level of NOx sensor is not stable all the way through, although it stays below level "1".

# DTC: P2100

EN01H16F01030F03001150

## P2100: DC motor for intake throttle valve - circuit (Open circuit (circuit low))

INFORMATION

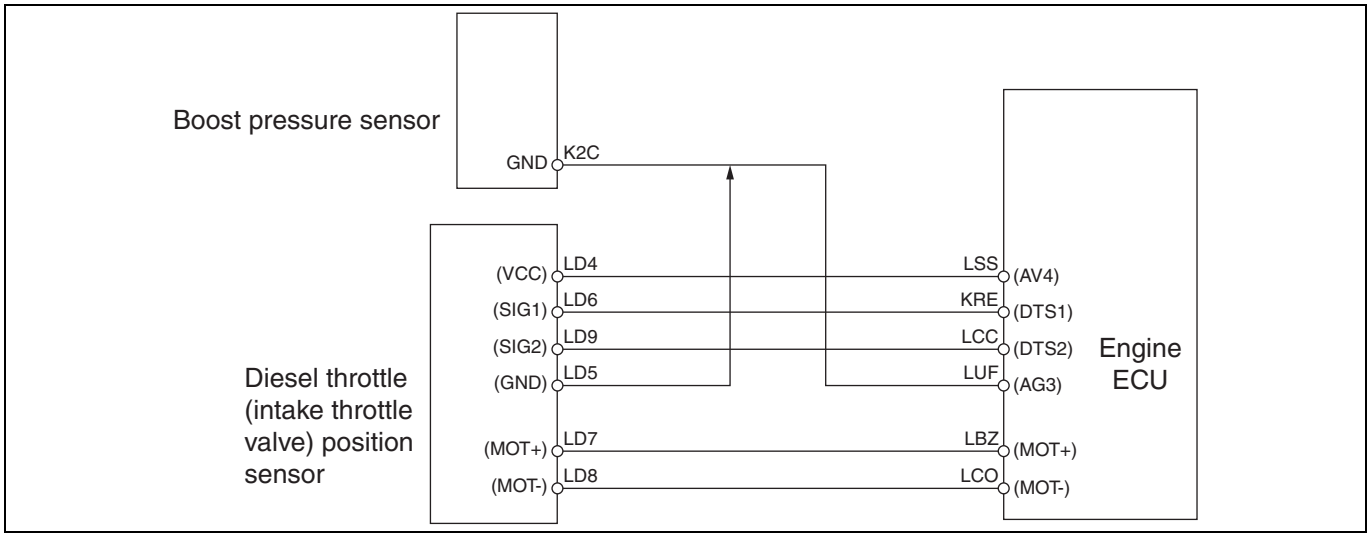


SAPH16F010300953

**1. Technical description**

- The diesel throttle (intake throttle) is of the butterfly type by DC motor driving.

**<Description of malfunction>**

- Possible diesel throttle unit failure or harness GND short-circuit/disconnection

**2. DTC set condition**

(1) DTC detection condition

- Battery voltage is in the range of 8 V to 16 V.
- There must be no disconnection in the harness connecting to the diesel throttle (intake throttle).

(2) Judgment criteria

- The diesel throttle (intake throttle) drive current has continued to be below 0.3 A for six seconds.

**3. Reset condition**

- After normal operation is restored and engine is restarted after engine stall.

**4. Indication, warning or system control regulation when the DTC is set.**

- MIL: ON
- SVS light: OFF

**5. Symptoms on the vehicle when the DTC is set**

**<Symptoms on the vehicle due to backup control (fail safe function)>**

- –

**<Symptoms on the vehicle due to malfunction>**

- –

**6. Pre-inspection work**

- Check that the battery voltage is in the normal range.

**7. After-inspection work**

- Clear all past DTCs.
- Check that no DTC is stored after test drive.

**8. Estimated failure factors**

- Abnormality of the battery or relay.
- Looseness or unsteady movement of diesel throttle connector.
- Harness disconnection/GND short-circuit between diesel throttle and engine ECU.

## INSPECTION PROCEDURE: P2100

| 1 | Inspect the diesel throttle connector |
|---|---|

1. Check the connection of the diesel throttle connector (Looseness and poor contact).

**Was any failure found?**

**YES**

**Connect securely, repair if needed.**
**Perform "After-inspection work" of INFORMATION section.**

**NO**

**Go to step 2.**

| 2 | Inspect the diesel throttle |
|---|---|

1. Disconnect the diesel throttle from the vehicle and confirm that there is no damage due to snagging or incursion of foreign substances.

**Was any failure found?**

**YES**

**Clean the diesel throttle. If necessary, replace it.**
**Perform "After-inspection work" of INFORMATION section.**

**NO**

**Go to step 3.**

| 3 | Inspect the diesel throttle power supply |
|---|---|

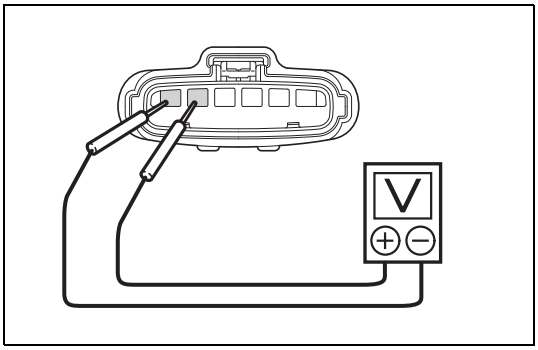


SAPH16F010300954

1. Connect the diesel throttle connector.
2. Connect the vehicle to HINO DX II .
3. Set the starter switch to the "ON" position and select [Engine].
4. Select [Inspection Menu] from the menu and check the operation of the diesel (intake) throttle valve.

**⚠ CAUTION**
**Make sure the engine is stopped; otherwise, the engine may be damaged.**

<Inspection procedure>
(1) Select [Inspection Menu].
(2) Select [Intake throttle valve inspection].
(3) Click [Start inspection].
(4) Select [UP].
• Check the operation of the throttle valve.
(5) Select [DOWN].
• Check the operation of the throttle valve.

**HINT**
**The throttle valve opening position changes of around 10 % per step between 0 – 100 %.**

5. Use the electrical tester to measure the voltage of the operating diesel throttle vehicle-side connector terminals.
   To insert a test lead into the connector, insert it from behind the connection.

| Measurement conditions | Tester connections | Standard values |
|---|---|---|
| – | Diesel throttle vehicle-side connector terminals No.1 – No.2 | 8 – 16 V |

**Do the measurements meet the standard value?**

**YES**

**Go to step 4.**

**NO**

**Repair or replace the harness.**
**Perform "After-inspection work" of INFORMATION section.**

| 4 | Check the operation of the diesel throttle [HINO DX II ] |
|---|---|

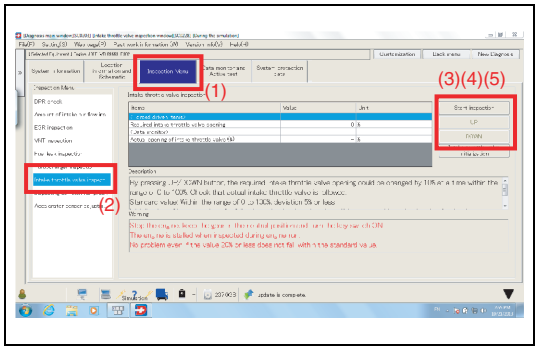


SAPH16F010300955

1. Connect the diesel throttle connector.
2. Connect the vehicle to HINO DX II .
3. Set the starter switch to the "ON" position and select [Engine].
4. Select [Inspection Menu] from the menu and check the operation of the diesel (intake) throttle valve.

**⚠ CAUTION**
**Make sure the engine is stopped; otherwise, the engine may be damaged.**

<Inspection procedure>
(1) Select [Inspection Menu].
(2) Select [Intake throttle valve inspection].
(3) Click [Start inspection].
(4) Select [UP].
• Check the operation of the throttle valve.
(5) Select [DOWN].
• Check the operation of the throttle valve.

**HINT**
**The throttle valve opening position changes of around 10 % per step between 0 – 90 %.**

**Is the throttle valve operating normally?**

**YES**

**Go to step 5.**

**NO**

**Replace the diesel throttle valve.**
**Perform "After-inspection work" of INFORMATION section.**

| 5 | Check the DTC detected (Engine ECU) [HINO DX II ] |
|---|---|

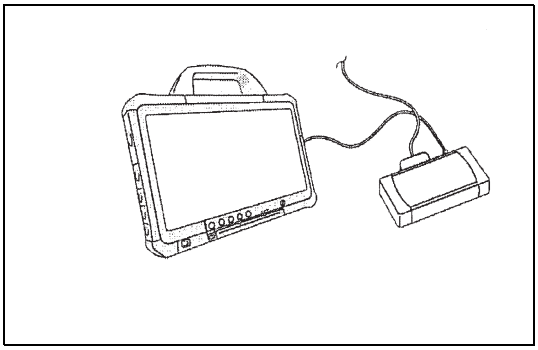

SAPH16F010300956

1. Set the starter switch to the "LOCK" position.
2. Set the starter switch to the "ON" position.
3. Select [Engine] and check if P2100 has been detected.

**Has DTC P2100 been detected?**

**YES**

**Replace the engine ECU.**
**Perform "After-inspection work" of INFORMATION section.**

**NO**

**Procedure completed.**
**Perform "After-inspection work" of INFORMATION section.**

# DTC: P2101

EN01H16F01030F03001151

## P2101: Intake throttle valve - functional

INFORMATION

**1. Technical description**

- Increase temperature during DPR automatic regeneration by throttling intake air utilizing Intake throttle.
- Assist engine stop by closing when starter switch is off.

**<Description of malfunction>**

- Stuck diesel throttle is detected.

**2. DTC set condition**

(1) DTC detection condition

- Stable operational condition
  - Engine revolution fluctuation range less than 20 r/min
  - Engine injection quantity fluctuation range less than 2 $mm^3$/st. cyl
- Normal intake throttle circuit
- Continuation of the above condition for 10 seconds

(2) Judgment criteria

- Difference between Actual and Target is more than ± 10 % for 80 seconds

**3. Reset condition**

- After normal operation is restored and engine is restarted after engine stall.

**4. Indication, warning or system control regulation when the DTC is set.**

- MIL: ON
- SVS light: OFF
- Engine output is restricted.
- Idling stop system is not available.
- Cruise control function is not available.

**5. Symptoms on the vehicle when the DTC is set**

**<Symptoms on the vehicle due to backup control (fail safe function)>**

- Engine output is insufficient.
- Idling stop system does not work.
- Cruise control does not work.

**<Symptoms on the vehicle due to malfunction>**

- –

**6. Pre-inspection work**

- Check that the battery voltage is in the normal range.

**7. After-inspection work**

- Clear all past DTCs.
- Check that no DTC is stored after test drive.

**8. Estimated failure factors**

- Air cleaner: Restricted
- Air hose:
  - Collapsed
  - Loose or leaking
- Body of throttle:
  - Excessive dirt inside body of diesel throttle
  - Throttle valve malfunction
- Battery: Decrease in voltage
- Harnesses:
  - Decrease in source voltage
  - Short-circuit to GND

## INSPECTION PROCEDURE: P2101

| 1 | Inspect the air cleaner element |
|---|---|

1. Check the air cleaner element for dirt or damage, and make sure the replacement period has not expired.

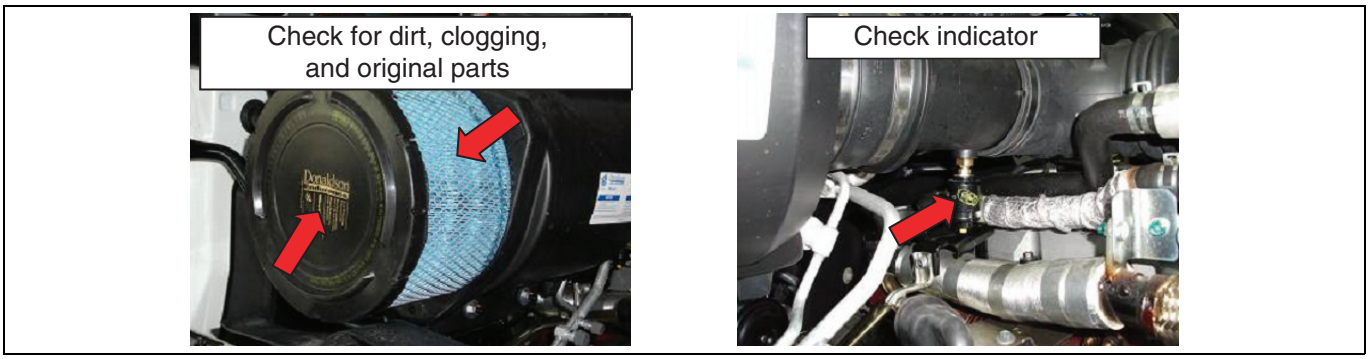


SAPH16F010300957

**Was any failure found?**

**YES**

**Clean or replace the air cleaner element. Perform "After-inspection work" of INFORMATION section.**

**NO**

**Go to step 2.**

| 2 | Inspect the air hose and air pipe |
|---|---|

1. Check that the air hose and pipe have no disconnections, clogging, ruptures, or cracks.

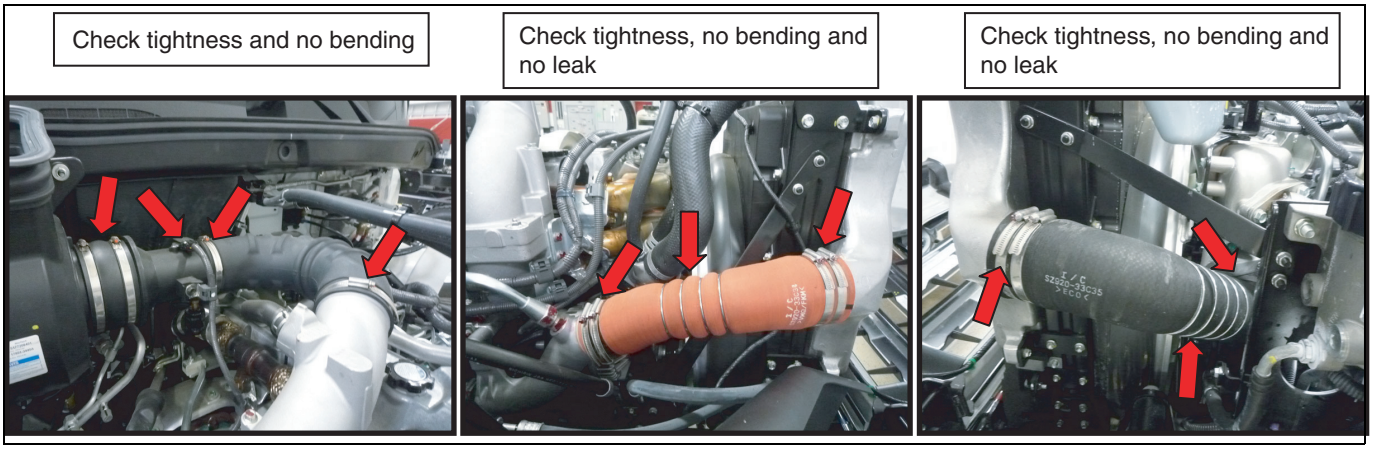


SAPH16F010300958

**Was any failure found?**

| YES | NO |
|---|---|
| **Repair or replace the air hose and air pipe. Perform "After-inspection work" of INFORMATION section.** | **Go to step 3.** |

| 3 | Inspect the exhaust muffler (exhaust pipe) |
|---|---|

1. Check that the exhaust muffler (exhaust pipe) has not disconnections, clogging, ruptures, or cracks.

**Was any failure found?**

| YES | NO |
|---|---|
| **Repair or replace the muffler (pipe). Perform "After-inspection work" of INFORMATION section.** | **Go to step 4.** |

| 4 | Inspect the exhaust brake valve |
|---|---|

1. Make sure the exhaust brake valve does not snag or stick.

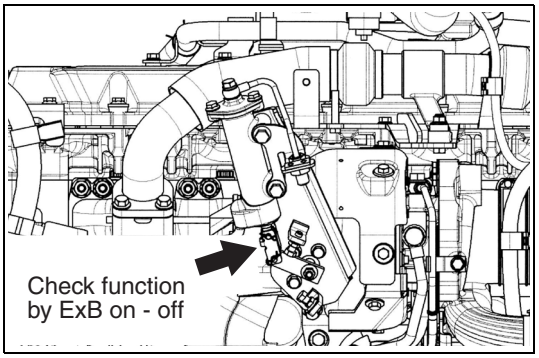


SAPH16F010300959

**Was any failure found?**

| YES | NO |
|---|---|
| **Clean the exhaust brake valve. If necessary, replace the exhaust brake valve. Perform "After-inspection work" of INFORMATION section.** | **Go to step 5.** |

| 5 | Inspect the diesel throttle |
|---|---|

1. Make sure there are no foreign substances (oil, soot, etc.) stuck to the interior of the intake air passageway.

**Was any failure found?**

**YES**

**Clean the intake passage.**
**Perform "After-inspection work" of INFORMATION section.**

**NO**

**Go to step 6.**

| 6 | Inspect the diesel throttle |
|---|---|

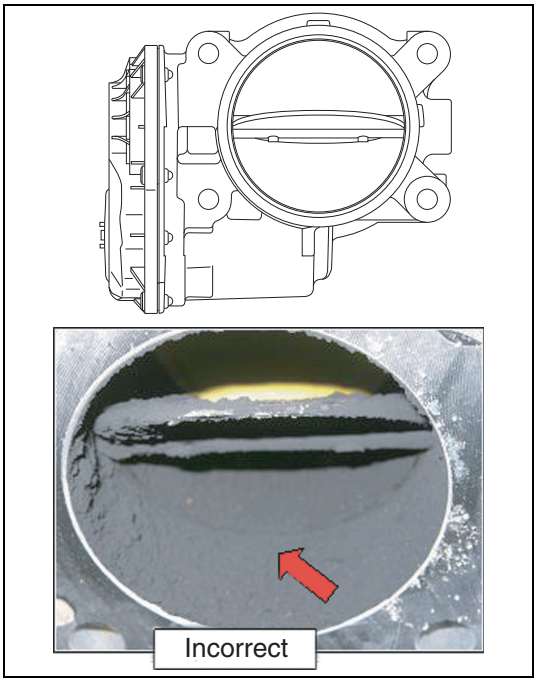


SAPH16F010300960

1. Disconnect the diesel throttle from the vehicle and confirm that it does not snag or is damaged due to the incursion of foreign substances. (The throttle valve can be manually moved when it is not energized.)
2. Make sure there is no looseness between the throttle valve and shaft.

**Was any failure found?**

**YES**

**Clean the diesel throttle. If necessary, replace the diesel throttle.**
**Perform "After-inspection work" of INFORMATION section.**

**NO**

**Go to step 7.**

| 7 | Check the operation of the diesel throttle valve [HINO DX II ] |
|---|---|

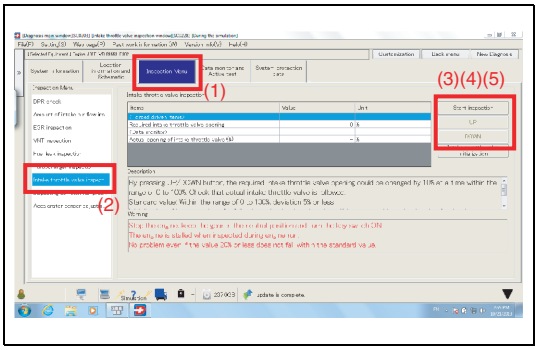


SAPH16F010300961

1. Connect the vehicle to HINO DX II .
2. Set the starter switch to the "ON" position and select [Engine].
3. Select [Inspection Menu] from the menu and check the operation of the diesel (intake) throttle valve.

**⚠ CAUTION**
**Make sure the engine is stopped; otherwise, the engine may be damaged.**

<Inspection procedure>
(1) Select [Inspection Menu].
(2) Select [Intake throttle valve inspection].
(3) Click [Start inspection].
(4) Select [UP].
• Check the operation of the throttle valve.
(5) Select [DOWN].
• Check the operation of the throttle valve.

**HINT**
**The throttle valve opening position changes of around 10 % per step between 0 – 100 %.**

**Is the throttle valve operating normally?**

**YES**

**Check that again that P2101 is not detected to complete the inspection procedure.**
**Perform "After-inspection work" of INFORMATION section.**

**NO**

**Replace the diesel throttle valve.**
**Perform "After-inspection work" of INFORMATION section.**

# DTC: P2103

EN01H16F01030F03001152

## P2103: DC motor for intake throttle valve - circuit (Short circuit (circuit high))

INFORMATION

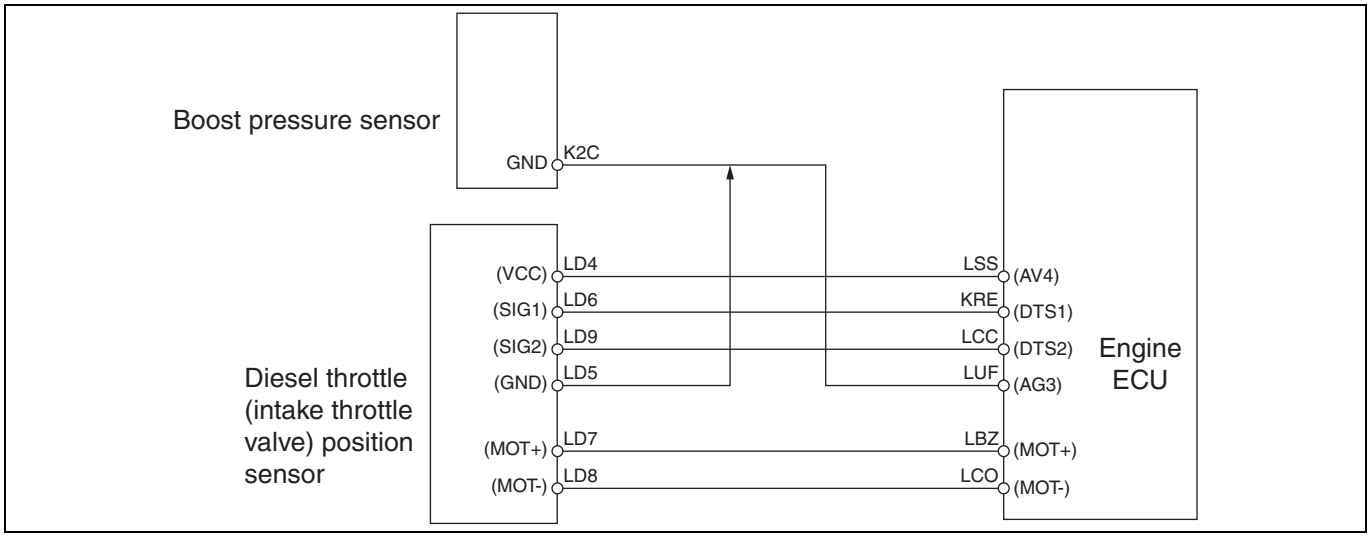


SAPH16F010300962

**1. Technical description**

- The diesel throttle (intake throttle) is of the butterfly type by DC motor driving.

**<Description of malfunction>**

- Detection of +B short-circuit in the diesel throttle harness.

**2. DTC set condition**

(1) DTC detection condition

- Battery voltage is in the range of 8 V to 16 V.
- There must be no disconnection in the harness that is connected to the intake throttle.

(2) Judgment criteria

- The diesel throttle (intake throttle) drive current has continued to be above 12 A for 112 msec.

**3. Reset condition**

- After normal operation is restored and engine is restarted after engine stall.

**4. Indication, warning or system control regulation when the DTC is set.**

- MIL: ON
- SVS light: OFF
- Engine output is restricted.

**5. Symptoms on the vehicle when the DTC is set**

**<Symptoms on the vehicle due to backup control (fail safe function)>**

- Engine output is insufficient.

**<Symptoms on the vehicle due to malfunction>**

- –

**6. Pre-inspection work**

- Check that the battery voltage is in the normal range.

**7. After-inspection work**

- Clear all past DTCs.
- Check that no DTC is stored after test drive.

**8. Estimated failure factors**

Overvoltage applied to diesel throttle (intake throttle)
Abnormality in battery voltage
Water intrusion inside the harness between the diesel throttle and the engine ECU.
Extra electronic hardware is connected.

## INSPECTION PROCEDURE: P2103

| 1 | Inspect the diesel throttle connector |
|---|---|

1. Check the connection of the diesel throttle connector (Looseness and poor contact).

**Was any failure found?**

**YES**

**Connect securely, repair if needed.**
**Perform "After-inspection work" of INFORMATION section.**

**NO**

**Go to step 2.**

| 2 | Inspect the diesel throttle |
|---|---|

1. Disconnect the diesel throttle from the vehicle and confirm that there is no damage due to snagging or incursion of foreign substances.

**Was any failure found?**

**YES**

**Clean the diesel throttle. If necessary, replace it.**
**Perform "After-inspection work" of INFORMATION section.**

**NO**

**Go to step 3.**

| 3 | Inspect the diesel throttle power supply |
|---|---|

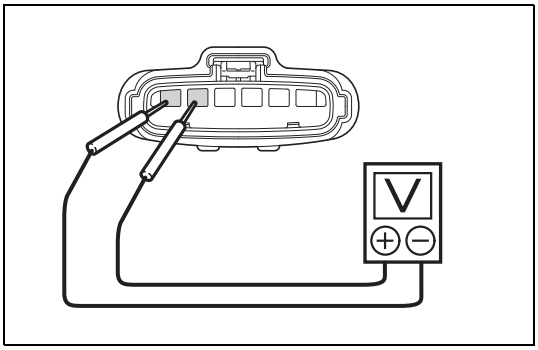


SAPH16F010300963

1. Connect the diesel throttle connector.
2. Connect the vehicle to HINO DX II .
3. Set the starter switch to the "ON" position and select [Engine].
4. Select [Inspection Menu] from the menu and check the operation of the diesel (intake) throttle valve.

**⚠ CAUTION**
**Make sure the engine is stopped; otherwise, the engine may be damaged.**

<Inspection procedure>
(1) Select [Inspection Menu].
(2) Select [Intake throttle valve inspection].
(3) Click [Start inspection].
(4) Select [UP].
• Check the operation of the throttle valve.
(5) Select [DOWN].
• Check the operation of the throttle valve.

**HINT**
**The throttle valve opening position changes of around 10 % per step between 0 – 100 %.**

5. Use the electrical tester to measure the voltage of the operating diesel throttle vehicle-side connector terminals.
   To insert a test lead into the connector, insert it from behind the connection.

| Measurement conditions | Tester connections | Standard values |
|---|---|---|
| – | Diesel throttle vehicle-side connector terminals No.1 – No.2 | 8 – 16 V |

**Do the measurements meet the standard value?**

**YES**

**Go to step 4.**

**NO**

**Repair or replace the harness.**
**Perform "After-inspection work" of INFORMATION section.**

| 4 | Check the operation of the diesel throttle [HINO DX II ] |
|---|---|

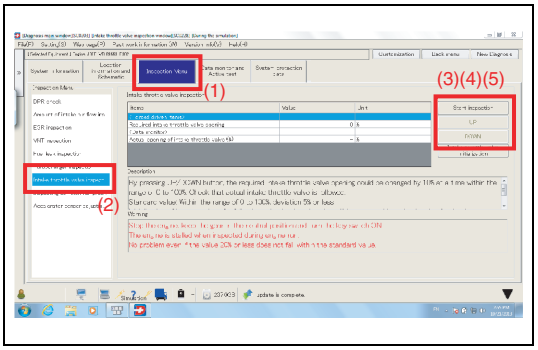


SAPH16F010300964

1. Connect the diesel throttle connector.
2. Connect the vehicle to HINO DX II .
3. Set the starter switch to the "ON" position and select [Engine].
4. Select [Inspection Menu] from the menu and check the operation of the diesel (intake) throttle valve.

**⚠ CAUTION**
**Make sure the engine is stopped; otherwise, the engine may be damaged.**

<Inspection procedure>
(1) Select [Inspection Menu].
(2) Select [Intake throttle valve inspection].
(3) Click [Start inspection].
(4) Select [UP].
• Check the operation of the throttle valve.
(5) Select [DOWN].
• Check the operation of the throttle valve.

**HINT**
**The throttle valve opening position changes of around 10 % per step between 0 – 90 %.**

**Is the throttle valve operating normally?**

**YES**

**Go to step 5.**

**NO**

**Replace the diesel throttle valve.**
**Perform "After-inspection work" of INFORMATION section.**

| 5 | Check the DTC detected (Engine ECU) [HINO DX II ] |
|---|---|

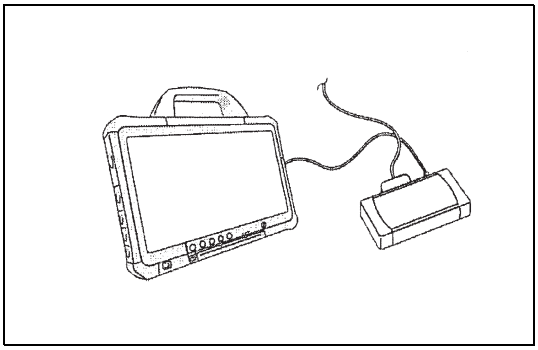

SAPH16F010300965

1. Set the starter switch to the "LOCK" position.
2. Set the starter switch to the "ON" position.
3. Select [Engine] and check if P2103 has been detected.

**Has DTC P2103 been detected?**

**YES**

**Replace the engine ECU.**
**Perform "After-inspection work" of INFORMATION section.**

**NO**

**Procedure completed.**
**Perform "After-inspection work" of INFORMATION section.**

# DTC: P2120

EN01H16F01030F03001153

## P2120: Throttle/Pedal Position Sensor/Switch "D" Circuit

INFORMATION

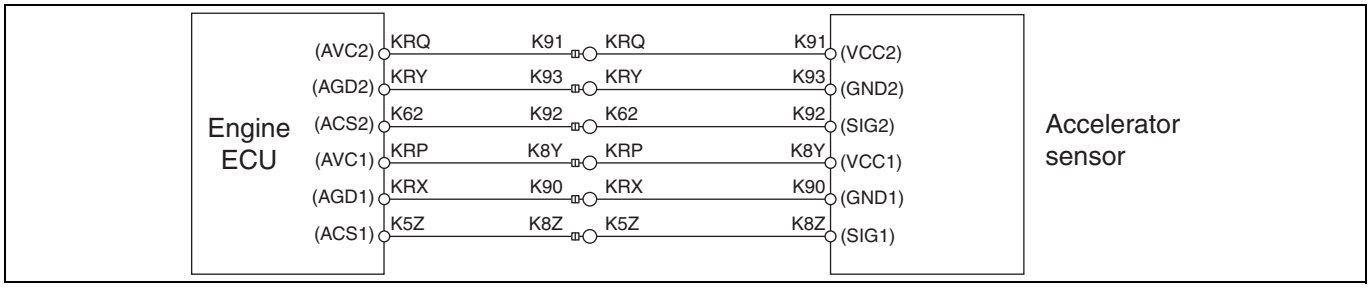


SAPH16F010300966

**1. Technical description**

- –

**<Description of malfunction>**

- Neither of accelerator sensors are properly functioning.

**2. DTC set condition**

(1) DTC detection condition

- Engine ECU power supply voltage is in the range of 10 V to 16 V.
- Starter switch ON.
- Engine running or starter LOCK

(2) Judgment criteria

- Both sensors are out of order at the same time.

**3. Reset condition**

- Immediately after normal operation is restored.

**4. Indication, warning or system control regulation when the DTC is set.**

- MIL: ON
- SVS light: OFF
- Cruise control function is not available.
- Idling stop system is not available.

**5. Symptoms on the vehicle when the DTC is set**

**<Symptoms on the vehicle due to backup control (fail safe function)>**

- Cruise control does not work.
- Idling stop system does not work.

**<Symptoms on the vehicle due to malfunction>**

- –

**6. Pre-inspection work**

- Check that the battery voltage is in the normal range.

**7. After-inspection work**

- Clear all past DTCs.
- Check that no DTC is stored after test drive.

**8. Estimated failure factors**

- Malfunction of both sensors
- Malfunction of engine ECU
- Harness disconnection or short-circuit

## INSPECTION PROCEDURE: P2120

| 1 | Check the DTC detected (Engine ECU) 1 [HINO DX II ] |
|---|---|

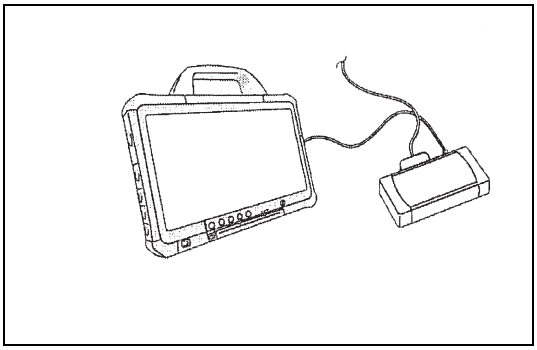

SAPH16F010300967

1. Connect the vehicle to HINO DX II .
2. Set the starter switch to the "ON" position.
3. Select [Engine] and check if P2120 (for example, P2122, P2123, P2127, P2128) has been detected.

**Has a DTC other than P2120 been detected?**

**YES**

**Go to the diagnostic procedure of a related DTC.**

**NO**

**Go to step 2.**

| 2 | Check the DTC detected (Engine ECU) 2 [HINO DX II ] |
|---|---|

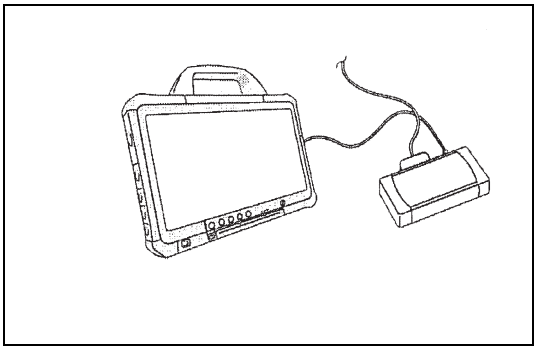

SAPH16F010300968

1. Set the starter switch to the "LOCK" position.
2. Replace a new accelerator sensor.
3. Set the starter switch to the "ON" position.
4. Select [Engine] and check if P2120 has been detected.

**Has DTC P2120 been detected?**

**YES**

**Restore the accelerator sensor to its original condition and then go to step 3.**

**NO**

**Procedure completed.**
**Perform "After-inspection work" of INFORMATION section.**

| 3 | Check the DTC detected (Engine ECU) 3 [HINO DX II ] |
|---|---|

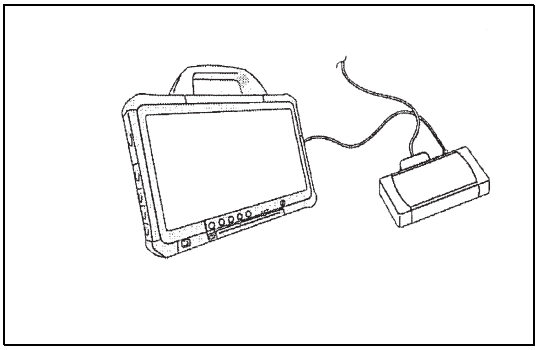

SAPH16F010300969

1. Set the starter switch to the "LOCK" position.
2. Replace a new engine ECU.
3. Set the starter switch to the "ON" position.
4. Select [Engine] and check if P2120 has been detected.

**Has DTC P2120 been detected?**

**YES**

**Inspect the accelerator sensor harness. Perform "After-inspection work" of INFORMATION section.**

**NO**

**Procedure completed. Perform "After-inspection work" of INFORMATION section.**

# DTC: P2122 and P2123

EN01H16F01030F03001154

## P2122: Accelerator pedal position sensor 1 - out of range (Out of range low)

INFORMATION

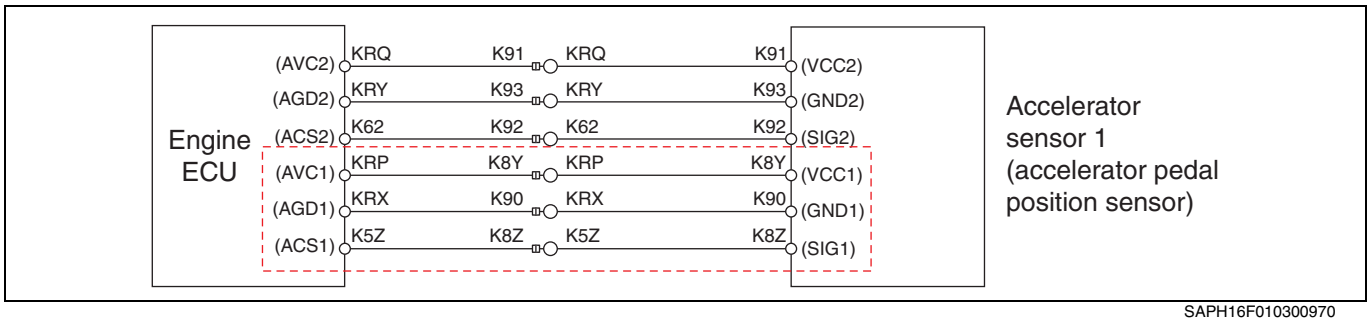


SAPH16F010300970

**1. Technical description**

- –

**<Description of malfunction>**

- The accelerator sensor 1 cannot correctly sense.

**2. DTC set condition**

(1) Check conditions

- Starter switch ON.
- Battery voltage is in the range of 10 V to 16 V.
- The engine has stopped (stalled) or runs at 500 r/min or higher for continuous 5 seconds or longer.

(2) Judgment criteria

- Accelerator sensor 1 (accelerator pedal position sensor) voltage ≤ 0.6 V (-15.4 %)
- Failure timer ≥ 1 second

**3. Reset condition**

- Immediately after normal operation is restored.

**4. Indication, warning or system control regulation when the DTC is set.**

- MIL: ON
- SVS light: OFF
- Cruise control function is not available.

**5. Symptoms on the vehicle when the DTC is set**

**<Symptoms on the vehicle due to backup control (fail safe function)>**

- Cruise control does not work.

**<Symptoms on the vehicle due to malfunction>**

- Cruise control does not work.

**6. Pre-inspection work**

- Check that the battery voltage is in the normal range.

**7. After-inspection work**

- Clear all past DTCs.
- Check that no DTC is stored after test drive.

**8. Estimated failure factors**

- Harness disconnection or short-circuit
- Malfunction of sensor 1
- Malfunction of engine ECU

## P2123: Accelerator pedal position sensor 1 - out of range (Out of range high)

INFORMATION

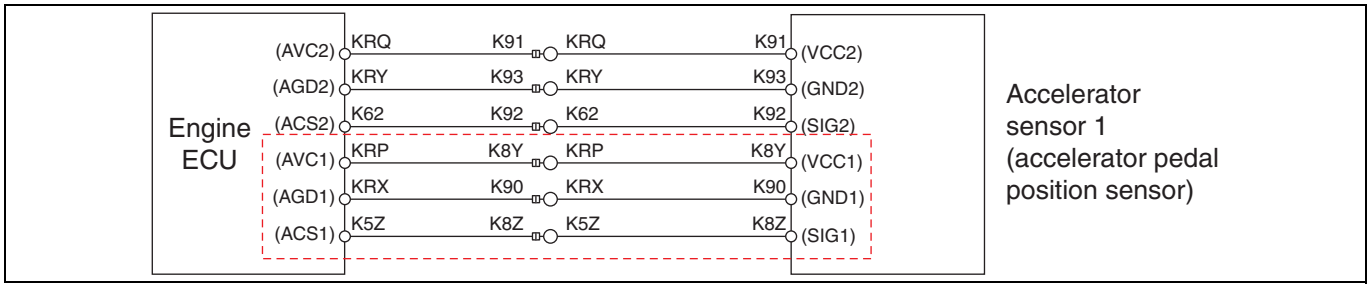


SAPH16F010300971

**1. Technical description**

- –

**<Description of malfunction>**

- The accelerator sensor 1 cannot correctly sense.

**2. DTC set condition**

(1) Check conditions
- Starter switch ON.
- Battery voltage is in the range of 10 V to 16 V.

(2) Judgment criteria
- Accelerator sensor 1 (accelerator pedal position sensor) voltage ≥ 4.1 V (147 %)
- Failure timer ≥ 1 second

**3. Reset condition**

- Immediately after normal operation is restored.

**4. Indication, warning or system control regulation when the DTC is set.**

- MIL: ON
- SVS light: OFF
- Cruise control function is not available.

**5. Symptoms on the vehicle when the DTC is set**

**<Symptoms on the vehicle due to backup control (fail safe function)>**

- Cruise control does not work.

**<Symptoms on the vehicle due to malfunction>**

- –

**6. Pre-inspection work**

- Check that the battery voltage is in the normal range.

**7. After-inspection work**

- Clear all past DTCs.
- Check that no DTC is stored after test drive.

**8. Estimated failure factors**

- Harness disconnection or short-circuit
- Malfunction of sensor 1
- Malfunction of engine ECU

## INSPECTION PROCEDURE: P2122 and P2123

| 1 | Inspect the accelerator sensor 1 connector |
|---|---|

1. Check the connection of the accelerator sensor 1 connector (Looseness and poor contact).

**Was any failure found?**

**YES**

**Connect securely, repair if needed. Perform "After-inspection work" of INFORMATION section.**

**NO**

**Go to step 2.**

| 2 | Inspect the accelerator sensor 1 unit |
|---|---|

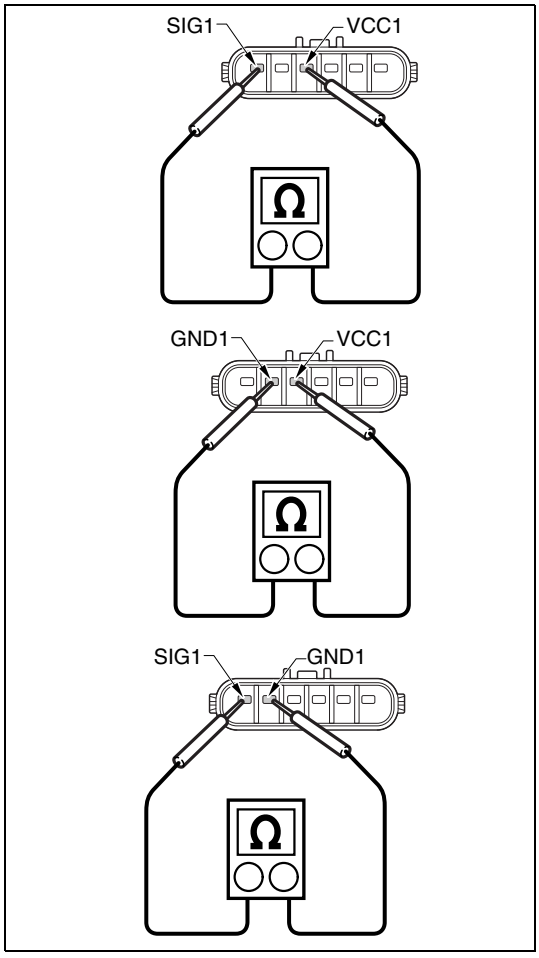


SAPH16F010300972

1. Set the starter switch to the "LOCK" position.
2. Disconnect the accelerator sensor 1 connector.
3. Use the electrical tester to measure the resistance between the terminals of the accelerator sensor 1.

| Measurement conditions | Tester connections | Standard values |
|---|---|---|
| **Starter switch: LOCK** | **Accelerator sensor 1<br>VCC1 – SIG1<br>VCC1 – GND1<br>SIG1 – GND1** | **2 Ω** |

**Do the measurements meet the standard value?**

| YES | NO |
|---|---|
| Go to step 3. | Replace the accelerator sensor 1. Perform "After-inspection work" of INFORMATION section. |

| 3 | Inspect the power supply of the accelerator sensor 1 |
|---|---|

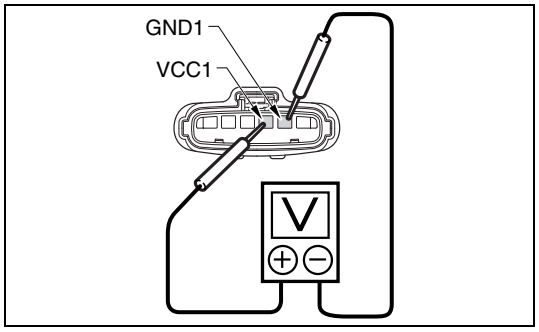

SAPH16F010300973

1. Set the starter switch to the "ON" position.
2. Use the electrical tester to measure the voltage between the terminals of the accelerator sensor 1 vehicle-side connector.

| Measurement conditions | Tester connections | Standard values |
|---|---|---|
| Starter switch: ON | Accelerator sensor 1 vehicle-side connector VCC1 – GND1 | 4.5 – 5.5 V |

**Do the measurements meet the standard value?**

| YES | NO |
|---|---|
| Go to step 4. | Go to step 5. |

| 4 | Inspect the signal circuit of the accelerator sensor 1 |
|---|---|

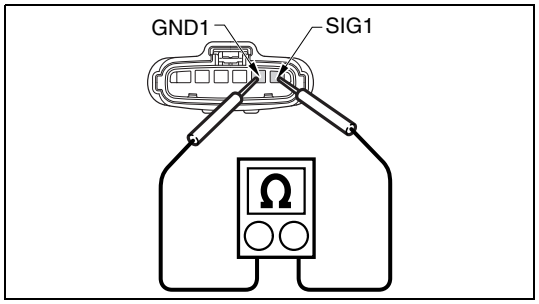

SAPH16F010300974

1. Set the starter switch to the "LOCK" position.
2. Use the electrical tester to measure the resistance the terminals of the accelerator sensor vehicle-side connector.

| Measurement conditions | Tester connections | Standard values |
|---|---|---|
| Starter switch: LOCK | Accelerator sensor 1 vehicle-side connector SIG1 – GND1 | 25 – 35 kΩ |

**Do the measurements meet the standard value?**

| YES | NO |
|---|---|
| Go to step 7. | Go to step 5. |

| 5 | Inspect for short-circuit of the accelerator sensor 1 harness |
|---|---|

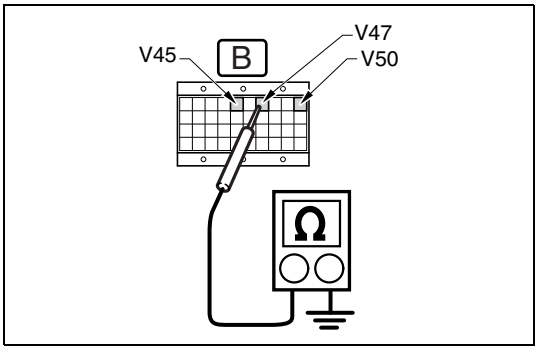


SAPH16F010300975

1. Connect the signal check harness to the engine ECU vehicle-side harness. (Do not connect the harness to the ECU.)
2. Use the electrical tester to measure the resistance between the terminals of the engine ECU (signal check harness) and ground.

| Measurement conditions | Tester connections | Standard values |
|---|---|---|
| **Starter switch: LOCK** | **Engine ECU (signal check harness) AGD1(V45) – Ground ACS1(V47) – Ground AVC1(V50) – Ground** | ∞ Ω |

**Do the measurements meet the standard value?**

**YES**

**Go to step 6.**

**NO**

**Repair or replace the harness.**
**Perform "After-inspection work" of INFORMATION section.**

| 6 | Inspect disconnection of the accelerator sensor 1 harness |
|---|---|

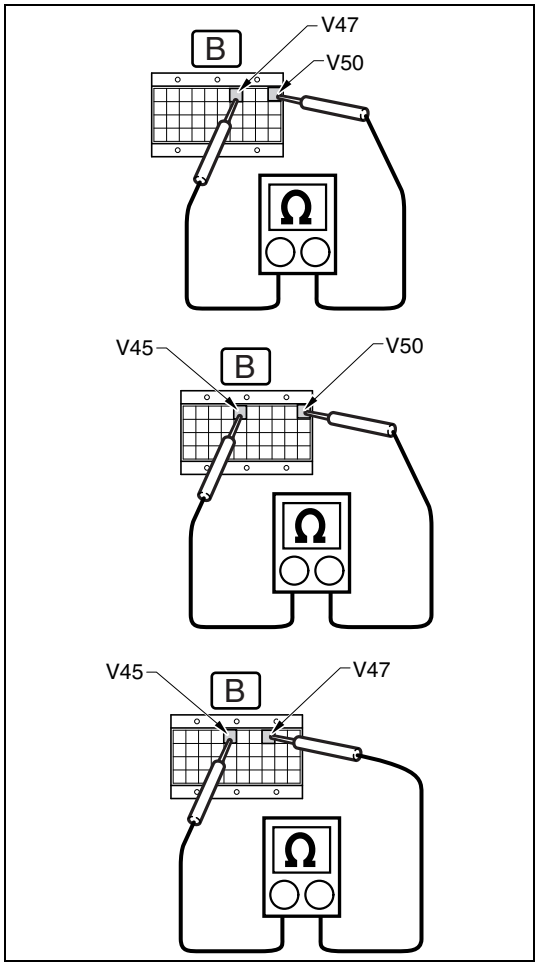


SAPH16F010300976

1. Connect the accelerator sensor connector.
2. Use the electrical tester to measure the resistance between the terminals of the engine ECU (signal check harness).

| Measurement conditions | Tester connections | Standard values |
|---|---|---|
| **Starter switch: LOCK** | **Engine ECU (signal check harness) AVC1(V50) – ACS1(V47) AVC1(V50) – AGD1(V45) ACS1(V47) – AGD1(V45)** | **2 Ω** |

**Do the measurements meet the standard value?**

**YES**

**Go to step 7.**

**NO**

**Repair or replace the harness.**
**Perform "After-inspection work" of INFORMATION section.**

| 7 | Check the DTC detected (Engine ECU) [HINO DX II ] |
|---|---|

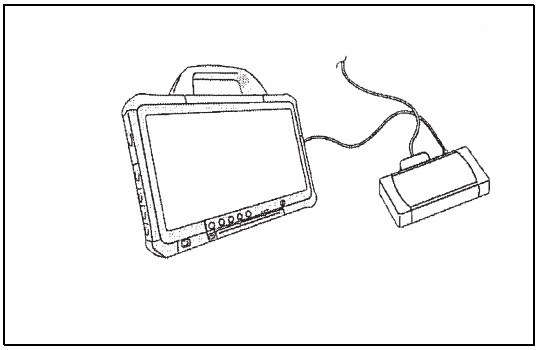

SAPH16F010300977

1. Connect the vehicle to HINO DX II .
2. Set the starter switch to the "ON" position.
3. Select [Engine] and check if the DTC (P2122 or P2123) has been detected.

**Has DTC (P2122 or P2123) been detected?**

**YES**

**Replace the engine ECU.**
**Perform "After-inspection work" of INFORMATION section.**

**NO**

**Procedure completed.**
**Perform "After-inspection work" of INFORMATION section.**

# DTC: P2127 and P2128

EN01H16F01030F03001155

## P2127: Accelerator pedal position sensor 2 - out of range (Out of range low)

INFORMATION

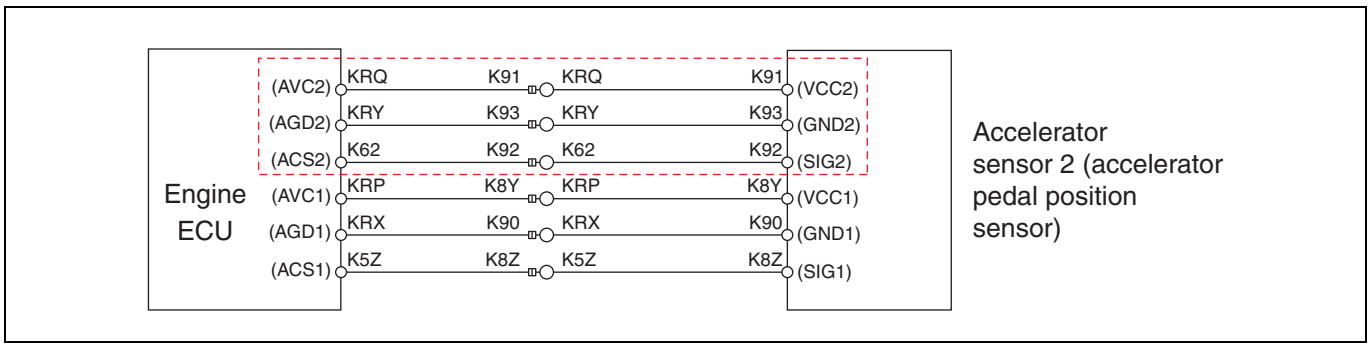


SAPH16F010300978

**1. Technical description**

- –

**<Description of malfunction>**

- The accelerator sensor 2 (accelerator pedal position sensor) cannot correctly sense.

**2. DTC set condition**

(1) Check conditions

- Starter switch ON.
- Battery voltage is in the range of 10 V to 16 V.
- The engine has stopped (stalled) or runs at 500 r/min or higher for continuous 5 seconds or longer.

(2) Judgment criteria

- Accelerator sensor 2 (accelerator pedal position sensor) voltage ≤ 1.4 V (-15.4 %)
- Failure timer ≥ 1 second

**3. Reset condition**

- Immediately after normal operation is restored.

**4. Indication, warning or system control regulation when the DTC is set.**

- MIL: ON
- SVS light: OFF
- Cruise control is not available.

**5. Symptoms on the vehicle when the DTC is set**

**<Symptoms on the vehicle due to backup control (fail safe function)>**

- Cruise control does not work.

**<Symptoms on the vehicle due to malfunction>**

- –

**6. Pre-inspection work**

- Check that the battery voltage is in the normal range.

**7. After-inspection work**

- Clear all past DTCs.
- Check that no DTC is stored after test drive.

**8. Estimated failure factors**

- Harness disconnection or short-circuit
- Malfunction of sensor 2
- Malfunction of engine ECU

## P2128: Accelerator pedal position sensor 2 - out of range (Out of range high)

INFORMATION

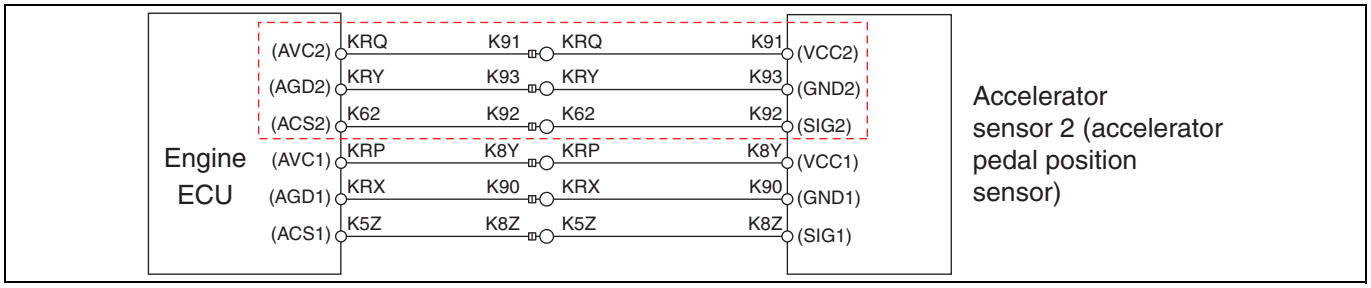


SAPH16F010300979

**1. Technical description**

- –

**<Description of malfunction>**

- The accelerator sensor 2 (accelerator pedal position sensor) cannot correctly sense.

**2. DTC set condition**

(1) Check conditions
- Starter switch ON.
- Battery voltage is in the range of 10 V to 16 V.

(2) Judgment criteria
- Accelerator sensor 2 (accelerator pedal position sensor) voltage ≥ 4.9 V (147 %)
- Failure timer ≥ 1 second

**3. Reset condition**

- Immediately after normal operation is restored.

**4. Indication, warning or system control regulation when the DTC is set.**

- MIL: ON
- SVS light: OFF
- Cruise control is not available.

**5. Symptoms on the vehicle when the DTC is set**

**<Symptoms on the vehicle due to backup control (fail safe function)>**

- Cruise control does not work.

**<Symptoms on the vehicle due to malfunction>**

- –

**6. Pre-inspection work**

- Check that the battery voltage is in the normal range.

**7. After-inspection work**

- Clear all past DTCs.
- Check that no DTC is stored after test drive.

**8. Estimated failure factors**

- Harness disconnection or short-circuit
- Malfunction of sensor 2
- Malfunction of engine ECU

## INSPECTION PROCEDURE: P2127 and P2128

| 1 | Inspect the accelerator sensor connector |
|---|---|

1. Check the connection of the accelerator sensor connector (Looseness and poor contact).

**Was any failure found?**

**YES**

**Connect securely, repair if needed.**
**Perform "After-inspection work" of INFORMATION section.**

**NO**

**Go to step 2.**

| 2 | Inspect the accelerator sensor |
|---|---|

1. Check the installation of the accelerator sensor.
2. Make sure there is no dirt or damage to the accelerator sensor.

**Was any failure found?**

**YES**

**Clean the accelerator sensor and install it properly.**
**If damaged, replace the accelerator sensor.**
**Perform "After-inspection work" of INFORMATION section.**

**NO**

**Go to step 3.**

| 3 | Inspect the accelerator sensor unit |
|---|---|

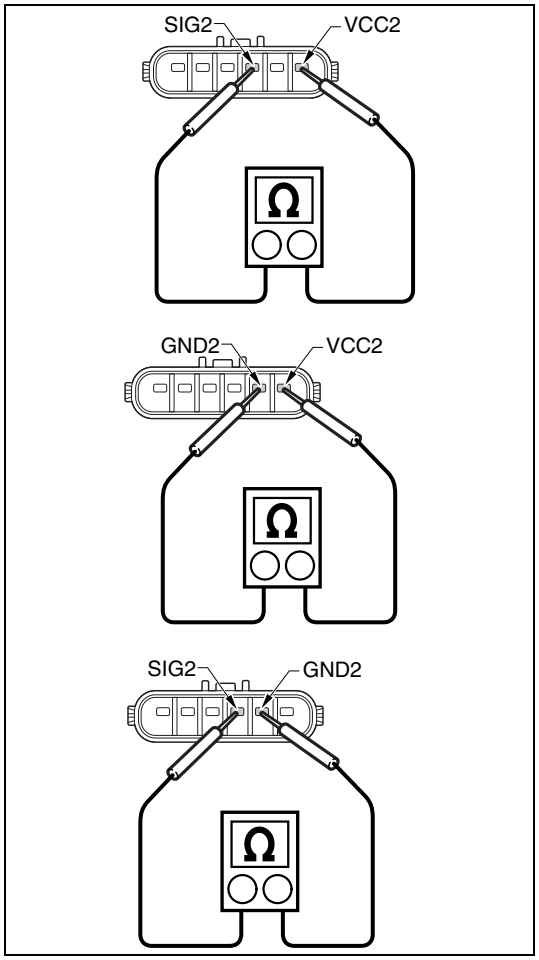


SAPH16F010300980

1. Set the starter switch to the "LOCK" position.
2. Disconnect the accelerator sensor connector.
3. Use the electrical tester to measure the resistance between the terminals of the accelerator sensor.

| Measurement conditions | Tester connections | Standard values |
|---|---|---|
| **Starter switch: LOCK** | **Accelerator sensor<br>VCC2 – SIG2<br>VCC2 – GND2<br>SIG2 – GND2** | **2 Ω** |

**Do the measurements meet the standard value?**

**YES**

**Go to step 4.**

**NO**

**Replace the accelerator sensor.**
**Perform "After-inspection work" of INFORMATION section.**

| 4 | Inspect the power supply of the accelerator sensor |
|---|---|

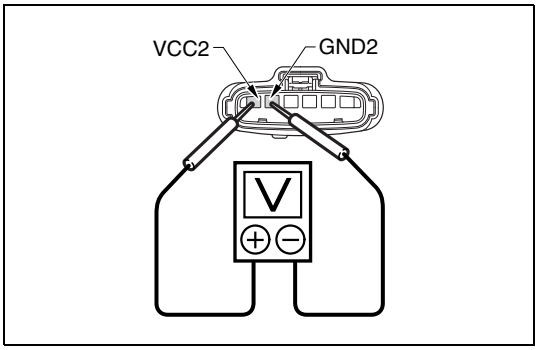


SAPH16F010300981

1. Set the starter switch to the "ON" position.
2. Use the electrical tester to measure the voltage between the terminals of the accelerator sensor vehicle-side connector.

| Measurement conditions | Tester connections | Standard values |
|---|---|---|
| Starter switch: ON | Accelerator sensor vehicle-side connector VCC2 – GND2 | 4.5 – 5.5 V |

**Do the measurements meet the standard value?**

**YES**

**Go to step 5.**

**NO**

**Go to step 6.**

| 5 | Inspect the signal circuit of the accelerator sensor |
|---|---|

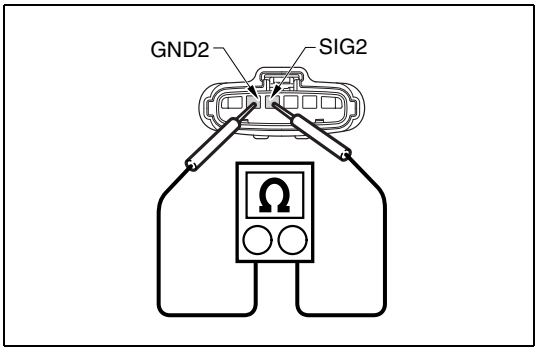


SAPH16F010300982

1. Set the starter switch to the "LOCK" position.
2. Use the electrical tester to measure the resistance the terminals of the accelerator sensor vehicle-side connector.

| Measurement conditions | Tester connections | Standard values |
|---|---|---|
| Starter switch: LOCK | Accelerator sensor vehicle-side connector SIG2 – GND2 | 25 – 35 kΩ |

**Do the measurements meet the standard value?**

**YES**

**Go to step 8.**

**NO**

**Go to step 6.**

| 6 | Inspect for short-circuit of the accelerator sensor harness |
|---|---|

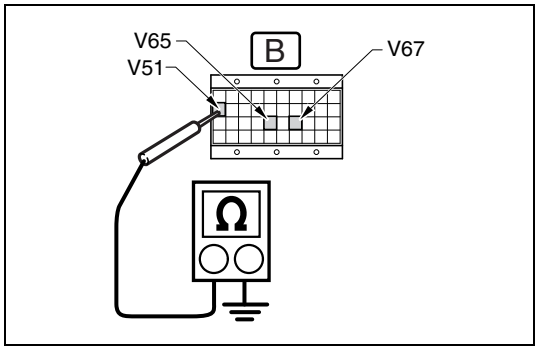


SAPH16F010300983

1. Connect the signal check harness to the engine ECU vehicle-side harness. (Do not connect the harness to the ECU.)

2. Use the electrical tester to measure the resistance between the terminals of the engine ECU (signal check harness) and ground.

| Measurement conditions | Tester connections | Standard values |
|---|---|---|
| **Starter switch: LOCK** | **Engine ECU (signal check harness) AVC2(V51) – Ground<br>AGD2(V65) – Ground<br>ACS2(V67) – Ground** | ∞ Ω |

**Do the measurements meet the standard value?**

**YES**

**Go to step 7.**

**NO**

**Repair or replace the harness.**
**Perform "After-inspection work" of INFORMATION section.**

| 7 | Inspect disconnection of the accelerator sensor harness |
|---|---|

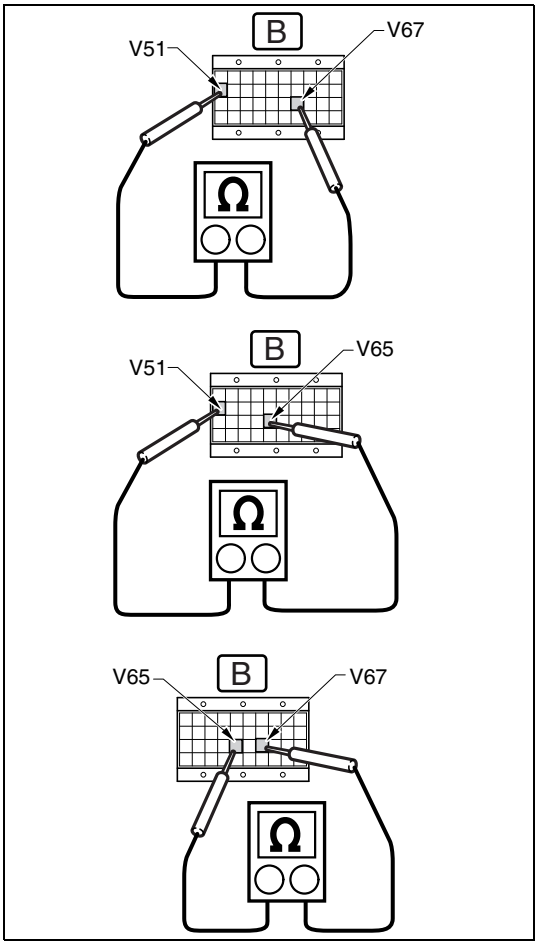


SAPH16F010300984

1. Connect the accelerator sensor connector.
2. Use the electrical tester to measure the resistance between the terminals of the engine ECU (signal check harness).

| Measurement conditions | Tester connections | Standard values |
|---|---|---|
| **Starter switch: LOCK** | **Engine ECU (signal check harness) AVC2(V51) – ACS2(V67) AVC2(V51) – AGD2(V65) ACS2(V67) – AGD2(V65)** | **2 Ω** |

**Do the measurements meet the standard value?**

**YES**

**Go to step 8.**

**NO**

**Repair or replace the harness.**
**Perform "After-inspection work" of INFORMATION section.**

| 8 | Check the DTC detected (Engine ECU) [HINO DX ll ] |
|---|---|

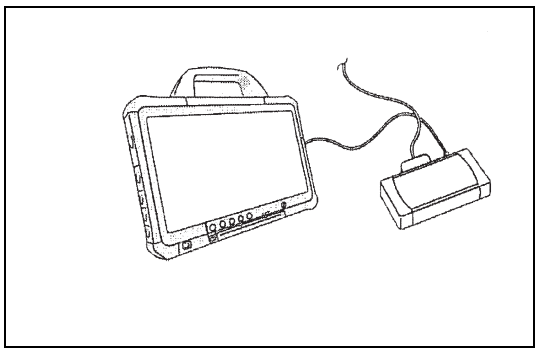

SAPH16F010300985

1. Connect the vehicle to HINO DX II .
2. Set the starter switch to the "ON" position.
3. Select [Engine] and check if the DTC (P2127 or P2128) has been detected.

**Has DTC (P2127 or P2128) been detected?**

**YES**

**Replace the engine ECU.**
**Perform "After-inspection work" of INFORMATION section.**

**NO**

**Procedure completed.**
**Perform "After-inspection work" of INFORMATION section.**

# DTC: P2135

EN01H16F01030F03001156

## P2135: Intake throttle valve position sensor - rationality

INFORMATION

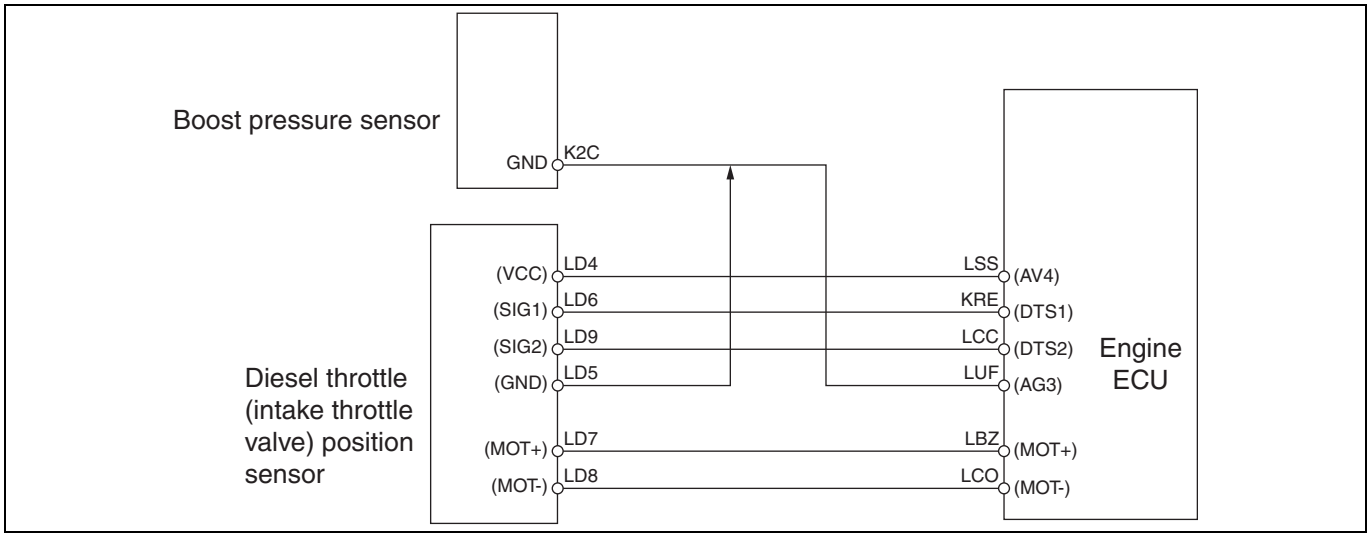


SAPH16F010300986

**1. Technical description**

- The diesel throttle (intake throttle) controls throttle valves steplessly to control boost pressure and intake air volume.
- Inside the diesel throttle (intake throttle), a sensor designed to detect a travel of the valve consistently monitors an actual opening to compare with command value.

**<Description of malfunction>**

- Diesel throttle (intake throttle valve) position sensor is recognized as being stuck or in characteristics failure condition

**2. DTC set condition**

(1) Check conditions

- Battery voltage is in the range of 10 V to 16 V.
- The engine has stopped or runs at 500 r/min or higher for continuous 5 seconds.

(2) Judgment criteria

- A difference between throttle position sensors 1 and 2 remains at 5 degrees or greater for 3 seconds.

**3. Reset condition**

- Immediately after normal operation is restored.

**4. Indication, warning or system control regulation when the DTC is set.**

- MIL: ON
- SVS light: OFF

**5. Symptoms on the vehicle when the DTC is set**

**<Symptoms on the vehicle due to backup control (fail safe function)>**

- –

**<Symptoms on the vehicle due to malfunction>**

- –

**6. Pre-inspection work**

- Check that the battery voltage is in the normal range.

**7. After-inspection work**

- Clear all past DTCs.
- Check that no DTC is stored after test drive.

**8. Estimated failure factors**

- Harness disconnection or short-circuit
- Irregular contact (disconnection or poor fit of connector)
- Malfunction of diesel throttle (throttle position sensor).
- Malfunction of engine ECU sensor power supply

## INSPECTION PROCEDURE: P2135

| 1 | Check the DTC detected (Engine ECU) 1 [HINO DX II ] |
|---|---|

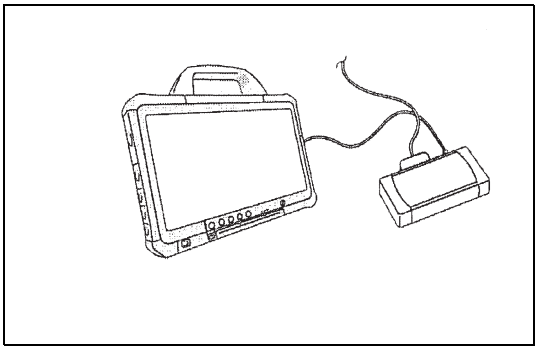

SAPH16F010300987

1. Connect the vehicle to HINO DX II .
2. Set the starter switch to the "ON" position.
3. Select [Engine] and check if any DTC other than P2135 (for example, P0122, P0123, P0222, P0223) has been detected.

**Has a DTC other than P2135 been detected?**

**YES**

**Go to the diagnostic procedure of a related DTC.**

**NO**

**Go to step 2.**

| 2 | Check the DTC detected (Engine ECU) 2 [HINO DX II ] |
|---|---|

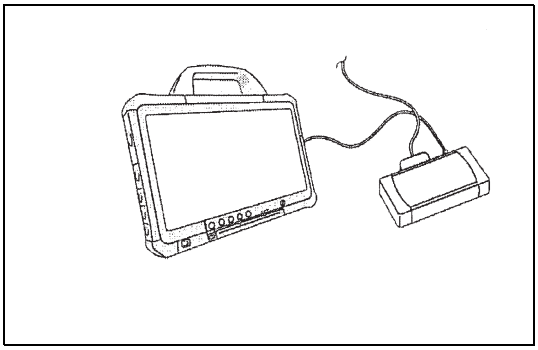

SAPH16F010300988

1. Set the starter switch to the "LOCK" position.
2. Disconnect the boost pressure sensor and common rail pressure sensor connectors.
3. Set the starter switch to the "ON" position.
4. Select [Engine] and check if any DTC other than P2135 has been detected.

**Has a DTC other than P2135 been detected?**

**YES**

**Go to the diagnostic procedure of a related DTC.**

**NO**

**Go to step 3.**

| 3 | Inspect the intake throttle valve position sensor connector |
|---|---|

1. Check the connection of the intake throttle valve position sensor connector (Looseness and poor contact).

**Was any failure found?**

**YES**

**Connect securely, repair if needed.**
**Perform "After-inspection work" of INFORMATION section.**

**NO**

**Go to step 4.**

| 4 | Inspect the signal wire harness of the diesel throttle |
|---|---|

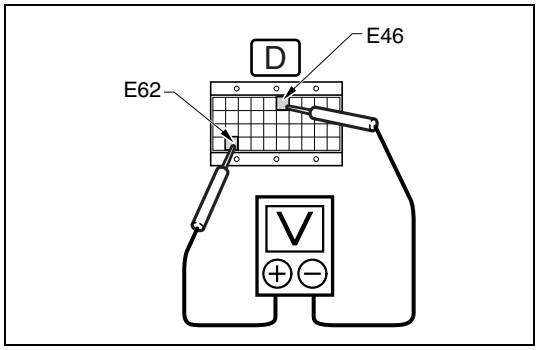

SAPH16F010300989

1. Set the starter switch to the "LOCK" position.
2. Connect the signal check harness to the engine ECU.
3. Set the starter switch to the "ON" position.
4. Use the electrical tester to measure the voltage between the terminals of the engine ECU (signal check harness).

| Measurement conditions | Tester connections | Standard values |
|---|---|---|
| Starter switch: ON | Engine ECU (signal check harness) DTS1(E62) – DTS2(E46) | 0.2 V |

**Do the measurements meet the standard value?**

**YES**

**Go to step 5.**

**NO**

**Replace the diesel throttle.**
**Perform "After-inspection work" of INFORMATION section.**

| 5 | Inspect the engine ECU |
|---|---|

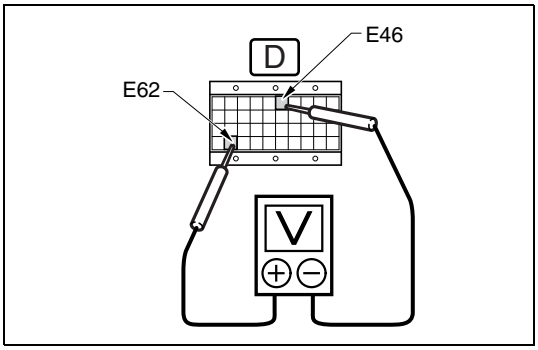


SAPH16F010300990

1. Set the starter switch to the "LOCK" position.
2. Disconnect the diesel throttle connector.
3. Set the starter switch to the "ON" position.
4. Use the electrical tester to measure the voltage between the terminals of the engine ECU (signal check harness).

| Measurement conditions | Tester connections | Standard values |
|---|---|---|
| **Starter switch: ON** | **Engine ECU (signal check harness) DTS1(E62) – DTS2(E46)** | **0 V** |

**Do the measurements meet the standard value?**

**YES**

**Procedure completed.**
**Clear and check again the DTC.**
**Perform "After-inspection work" of INFORMATION section.**

**NO**

**Replace the engine ECU.**
**Perform "After-inspection work" of INFORMATION section.**

# DTC: P2138

EN01H16F01030F03001157

## P2138: Accelerator pedal position sensor - rationality

INFORMATION

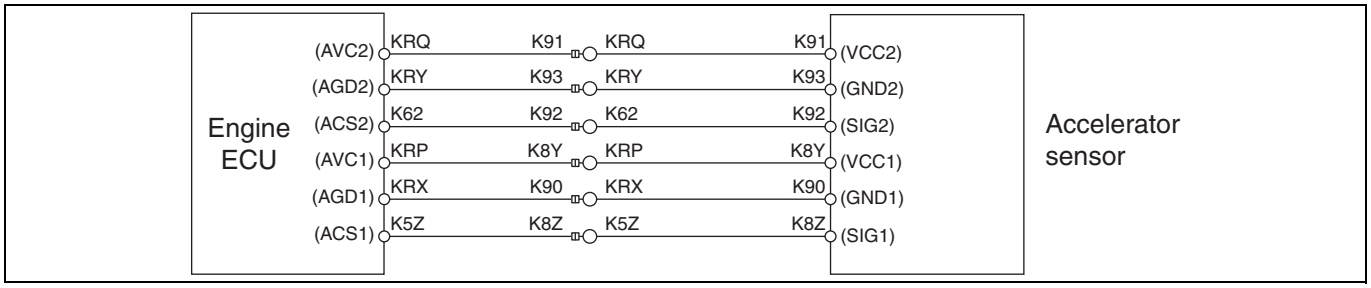


SAPH16F010300991

**1. Technical description**

**<Description of malfunction>**

- Abnormal characteristics or stuck sensing of accelerator sensor

**2. DTC set condition**

(1) Check conditions

- Starter switch ON.
- Battery voltage is in the range of 10 V to 16 V.
- The engine has stopped (stalled) or runs at 500 r/min or higher for continuous 5 seconds or longer.

(2) Judgment criteria

**Comparison of sensor voltage between sensor 1 and sensor 2**

- Accelerator pedal position sensor 2 voltage – Accelerator pedal position sensor 1 voltage. ≤ 0 V or ≥ 1.6 V
- Failure timer ≥ 3 seconds

**3. Reset condition**

- Immediately after normal operation is restored.

**4. Indication, warning or system control regulation when the DTC is set.**

- MIL: ON
- SVS light: OFF
- Cruise control function is not available.

**5. Symptoms on the vehicle when the DTC is set**

**<Symptoms on the vehicle due to backup control (fail safe function)>**

- Cruise control does not work.

**<Symptoms on the vehicle due to malfunction>**

- –

**6. Pre-inspection work**

- Check that the battery voltage is in the normal range.

**7. After-inspection work**

- Clear all past DTCs.
- Check that no DTC is stored after test drive.

**8. Estimated failure factors**

- Harness disconnection or short-circuit
- Malfunction of accelerator sensor
- Malfunction of engine ECU

## INSPECTION PROCEDURE: P2138

| 1 | Check the DTC detected (Engine ECU) [HINO DX ll ] |
|---|---|

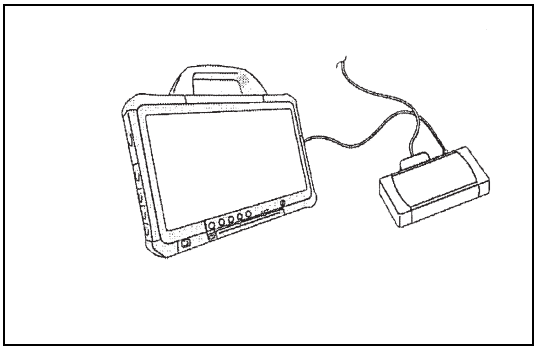

SAPH16F010300992

1. Connect the vehicle to HINO DX II .
2. Set the starter switch to the "ON" position.
3. Select [Engine] and check if any DTC other than P2138 (for example, P2122, P2123, P2127, P2128) has been detected.

**Has a DTC other than P2138 been detected?**

**YES**

**Go to the diagnostic procedure of a related DTC.**

**NO**

**Go to step 2.**

| 2 | Inspect the PTO accelerator sensor |
|---|---|

1. Check that the GND circuit of the PTO accelerator sensor is connected to the appropriate harness.

**Was any failure found?**

**YES**

**Repair the GND circuit of the PTO accelerator sensor.**
**Perform "After-inspection work" of INFORMATION section.**

**NO**

**Go to step 3.**

| 3 | Inspect the accelerator sensor connector |
|---|---|

1. Check the connection of the accelerator sensor connector (Looseness and poor contact).

**Was any failure found?**

**YES**

**Connect securely, repair if needed.**
**Perform "After-inspection work" of INFORMATION section.**

**NO**

**Go to step 4.**

| 4 | Inspect the accelerator sensor signal |
|---|---|

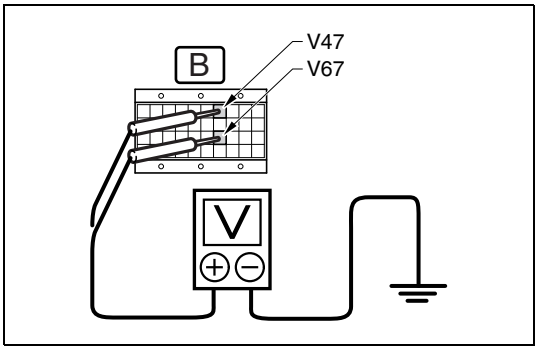


SAPH16F010300993

1. Set the starter switch to the "LOCK" position.
2. Connect the signal check harness to the engine ECU.
3. Set the starter switch to the "ON" position.
4. Use the electrical tester to measure the voltage between the terminals of the engine ECU (signal check harness) and ground.

| Measurement conditions | Tester connections | Standard values |
|---|---|---|
| • Starter switch: ON<br>• Depress the accelerator pedal (from 0 % to 100 %) | Engine ECU (signal check harness) ACS1(V47) – Ground<br>ACS2(V67) – Ground | Difference in voltage between terminals: 0.4 – 1.2 V |

**Do the measurements meet the standard value?**

**YES**

**Go to step 5.**

**NO**

**Replace the accelerator sensor.**
**Perform "After-inspection work" of INFORMATION section.**

| 5 | Inspect the engine ECU |
|---|---|

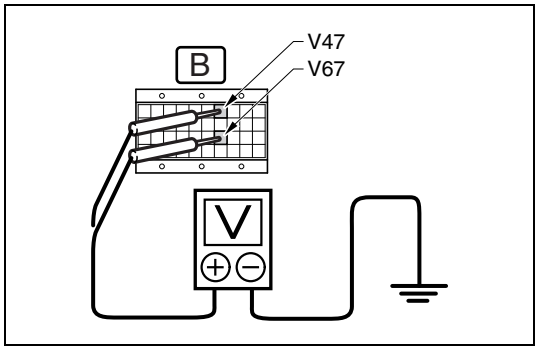


SAPH16F010300994

1. Set the starter switch to the "LOCK" position.
2. Disconnect the accelerator sensor connector.
3. Set the starter switch to the "ON" position.
4. Use the electrical tester to measure the voltage between the terminals of the engine ECU (signal check harness) and ground.

| Measurement conditions | Tester connections | Standard values |
|---|---|---|
| Starter switch: ON | Engine ECU (signal check harness) ACS1(V47) – Ground<br>ACS2(V67) – Ground | 0 V |

**Do the measurements meet the standard value?**

**YES**

**Procedure completed.**
**Clear and check again the DTC.**
**Perform "After-inspection work" of INFORMATION section.**

**NO**

**Replace the engine ECU.**
**Perform "After-inspection work" of INFORMATION section.**

# DTC: P2146

EN01H16F01030F03001158

## P2146: Fuel injector driver circuit 1 - circuit (circuit open)

INFORMATION

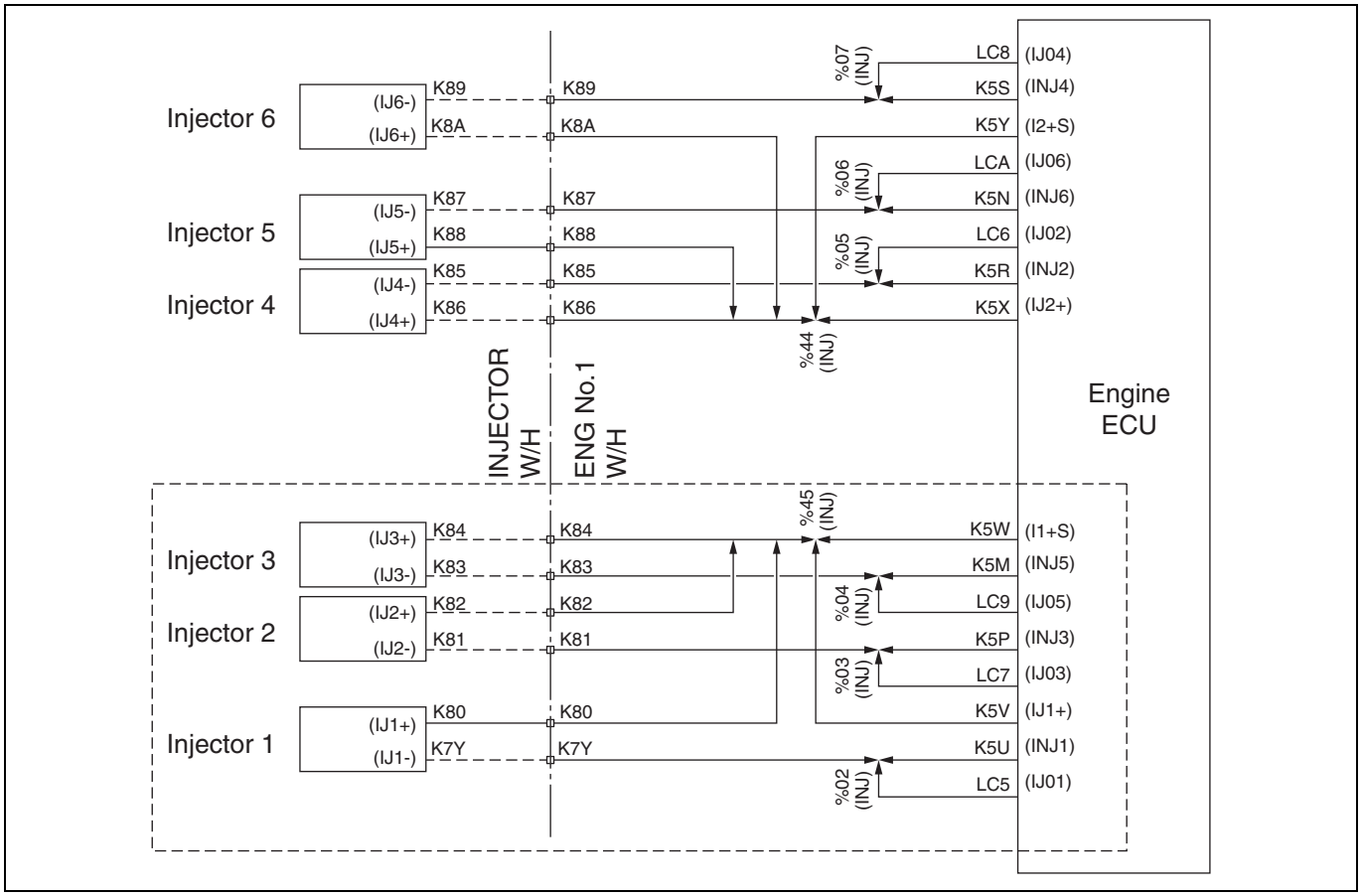


SAPH16F010300995

**1. Technical description**

- The engine ECU controls the fuel injection quantity according to the injector valve-open interval.
- The valve-open interval is adjusted by the magnetic valve.

**<Description of malfunction>**

- Injector drive system common 1 is not working properly.
- Minus side harness may be in short-circuit.

**2. DTC set condition**

(1) DTC detection condition

- Starter switch ON.
- Battery voltage is in the range of 10 V to 16 V.
- Injector is in operation.
- Engine speed is higher than 0 r/min.

(2) Judgment criteria

- When the injector drive system circuit 1 current value is smaller than 16 A, the fail count is detected with the full count. (When the engine speed is 750 r/min: 0.6 seconds * Varies according to engine speed)

**3. Reset condition**

- After normal operation is restored and engine is restarted after having stalled.

**4. Indication, warning or system control regulation when the DTC is set.**

- MIL: ON
- SVS light: OFF
- Engine output is restricted.
- Cruise control function is not available.
- Idling stop system is not available.
- Vehicle start control is not available.

**5. Symptoms on the vehicle when the DTC is set**

**<Symptoms on the vehicle due to backup control (fail safe function)>**

- Engine output is insufficient.
- Cruise control does not work.
- Idling stop system does not work.
- Vehicle start control does not work.

**<Symptoms on the vehicle due to malfunction>**

- –

**6. Pre-inspection work**

- Check that the battery voltage is in the normal range.

**7. After-inspection work**

- Clear all past DTCs.
- Check that no DTC is detected after test drive.

**8. Estimated failure factors**

- Harness disconnection or short-circuit
- Looseness or poor contact of connector
- Injector internal coil disconnection
- Engine ECU failure

## INSPECTION PROCEDURE: P2146

| 1 | Inspect the injector connector |
|---|---|

1. Check the connection of the injector connector (Looseness and poor contact).

**Was any failure found?**

**YES**

**Connect securely, repair or replace if needed.**
**Perform "After-inspection work" of INFORMATION section.**

**NO**

**Go to step 2.**

| 2 | Inspect the injector power supply |
|---|---|

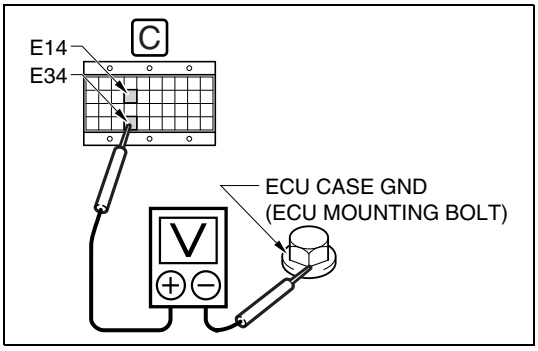

SAPH16F010300996

1. Set the starter switch to the "LOCK" position.
2. Connect the signal check harness to the engine ECU.
3. Set the starter switch to the "ON" position.
4. Use the electrical tester to measure the voltage between each terminal in the engine ECU (signal check harness) and ground.

| Measurement conditions | Tester connections | Standard values |
|---|---|---|
| Starter switch: ON | Engine ECU (signal check harness) IJ1+(E14) – Ground<br>I1+S(E34) – Ground | At least 3/4 of battery voltage |

**Do the measurements meet the standard value?**

**YES**

**Go to step 3.**

**NO**

**Go to step 7.**

| 3 | Inspect the injector wire harness power supply (engine ECU – injector linked-up connector) |
|---|---|

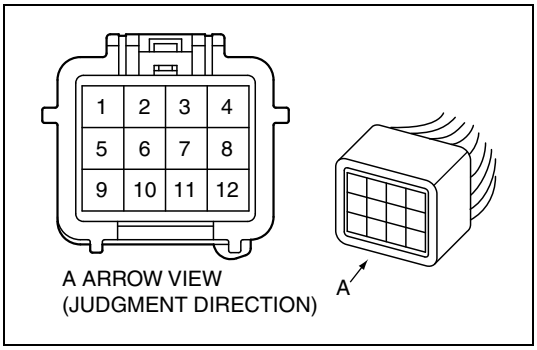


SAPH16F010300997

1. Set the starter switch to the "LOCK" position.
2. Disconnect the injector linked-up connector.
3. Set the starter switch to the "ON" position.
4. Use the electrical tester to measure the voltage between each terminal in the injector linked-up connector (ECU side) and ground.

| Measurement conditions | Tester connections | Standard values |
|---|---|---|
| **Starter switch: ON** | **Injector linked-up connector (ECU side):<br>#1 injector:<br>11 terminal – Ground<br>#2 injector:<br>3 terminal – Ground<br>#3 injector:<br>6 terminal – Ground** | **8 V or less** |

**Do the measurements meet the standard value?**

**YES**

**Go to step 4.**

**NO**

**Repair or replace the harness.**
**Perform "After-inspection work" of INFORMATION section.**

| 4 | **Inspect for short-circuit of the injector wire harness (between injector linked-up connector and injector harness connector)** |
|---|---|

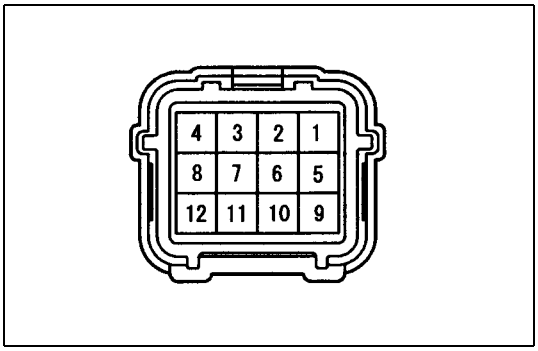


SAPH16F010300998

1. Set the starter switch to the "LOCK" position.
2. Disconnect the injector harness connector.
3. Use the electrical tester to measure the resistance between each terminal in the injector linked-up connector (engine side) and ground.

| Measurement conditions | Tester connections | Standard values |
|---|---|---|
| **Starter switch: LOCK** | **Injector linked-up connector (engine side) #1 injector: 11 terminal – Ground #2injector: 3 terminal – Ground #3 injector: 6 terminal – Ground** | ∞ Ω |

**Do the measurements meet the standard value?**

**YES**

**Go to step 5.**

**NO**

**Repair or replace the harness. Perform "After-inspection work" of INFORMATION section.**

| 5 | Inspect disconnection of injector wire harness |
|---|---|

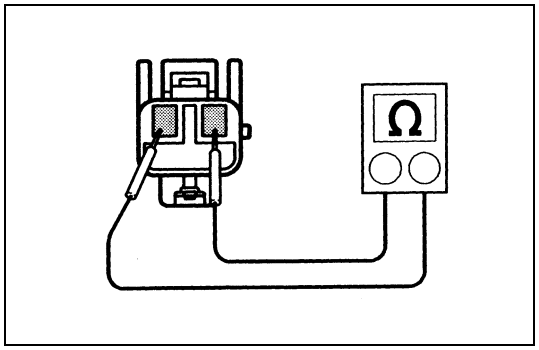

SAPH16F010300999

1. Disconnect the injector harness connector.
2. Use the electrical tester to measure the resistance between the terminals of the #1, #2 and #3 injector harness connector.

| Measurement conditions | Tester connections | Standard values |
|---|---|---|
| Starter switch: LOCK | Injector harness connector terminals<br>#1 IJ1+ – IJ1-<br>#2 IJ2+ – IJ2-<br>#3 IJ3+ – IJ3- | 20 °C {68 °F}:<br>0.37 – 0.57 Ω |

**Do the measurements meet the standard value?**

**YES**

**Go to step 7.**

**NO**

**Go to step 6.**

| 6 | Inspect the injector unit |
|---|---|

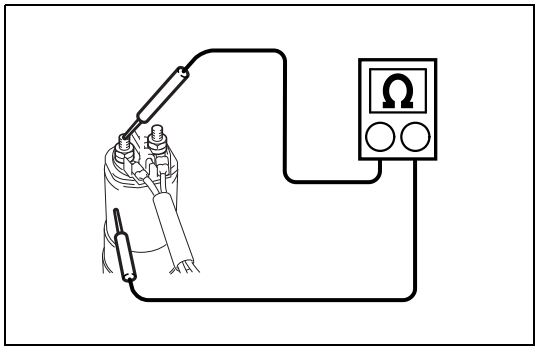

SAPH16F010301000

1. Measure the resistance between the #1 – #3 injector terminals and the injector bodies.

| Measurement conditions | Tester connections | Standard values |
|---|---|---|
| Starter switch: LOCK | Between injector terminal and body | 10 MΩ or more |

**Do the measurements meet the standard value?**

**YES**

**Go to step 7.**

**NO**

**Replace the injector.**
**Perform "After-inspection work" of INFORMATION section.**

| 7 | Check the DTC detected (Engine ECU) [HINO DX II ] |
|---|---|

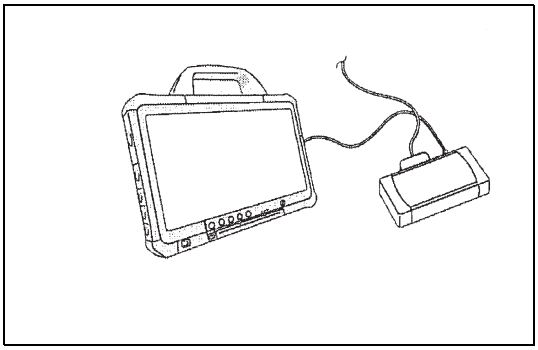

SAPH16F010301001

1. Warm-up the engine. (engine coolant temperature: 60 °C {140 °F} or more)
2. Stop the engine and set the starter switch to the "LOCK" position.
3. Connect the vehicle to HINO DX II .
4. Set the starter switch to the "ON" position.
5. Select [Engine] and check if P2146 has been detected.

**Has DTC P2146 been detected?**

**YES**

**Replace the engine ECU.**
**Perform "After-inspection work" of INFORMATION section.**

**NO**

**Procedure completed.**
**Perform "After-inspection work" of INFORMATION section.**

# DTC: P2147 and P2148

EN01H16F01030F03001159

## P2147: Fuel injector driver circuit 1 - circuit (circuit low)

INFORMATION

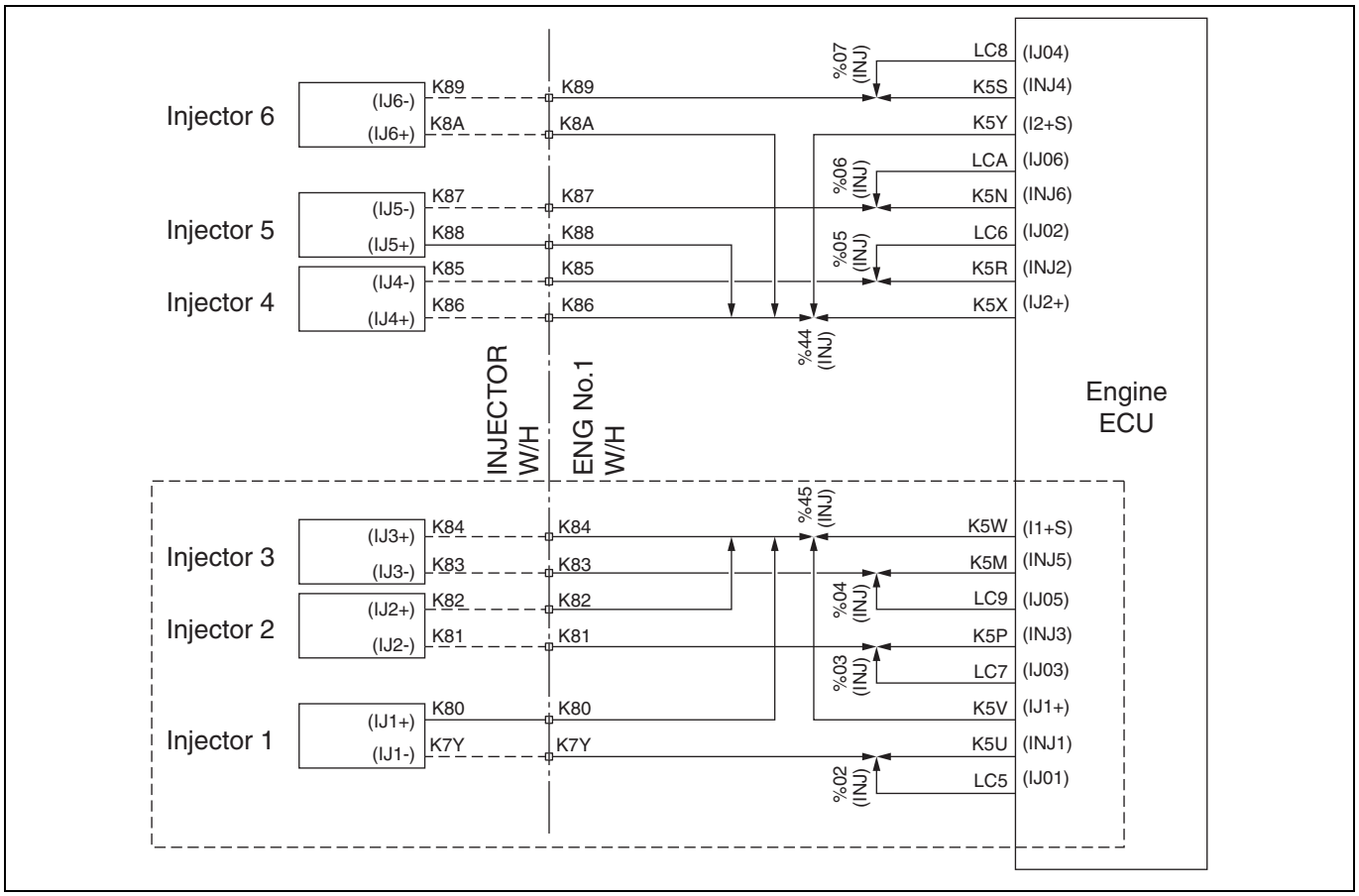


SAPH16F010301002

**1. Technical description**

- The engine ECU controls the fuel injection quantity according to the injector valve-open interval.
- The valve-open interval is adjusted by the magnetic valve.

**<Description of malfunction>**

- Injector drive system common 1 is not working properly.
- Minus side harness may be in short-circuit.

**2. DTC set condition**

(1) DTC detection condition

- Starter switch ON.
- Battery voltage is in the range of 10 V to 16 V.
- Injector is in operation.
- Engine speed is higher than 0 r/min.

(2) Judgment criteria

- When overcurrent is detected in the injector drive system circuit 2 where +B short circuit is being detected, the fail counter is detected to be full.
  (When the engine speed is 750 r/min: 0.6 seconds * Varies according to engine speed)

**3. Reset condition**

- After normal operation is restored and engine is restarted after having stalled.

**4. Indication, warning or system control regulation when the DTC is set.**

- MIL: ON
- SVS light: OFF
- Engine output is restricted.
- Cruise control function is not available.
- Idling stop system is not available.
- Vehicle start control is not available.

**5. Symptoms on the vehicle when the DTC is set**

**<Symptoms on the vehicle due to backup control (fail safe function)>**

- Engine output is insufficient.
- Cruise control does not work.
- Idling stop system does not work.
- Vehicle start control does not work.

**<Symptoms on the vehicle due to malfunction>**

- –

**6. Pre-inspection work**

- Check that the battery voltage is in the normal range.

**7. After-inspection work**

- Clear all past DTCs.
- Check that no DTC is detected after test drive.

**8. Estimated failure factors**

- Disconnection or short-circuit in sensor harness
- Irregular contact (disconnection or poor fit of connector)
- Injector internal coil disconnection
- Engine ECU failure

## P2148: Fuel injector driver circuit 1 - circuit (circuit high)

INFORMATION

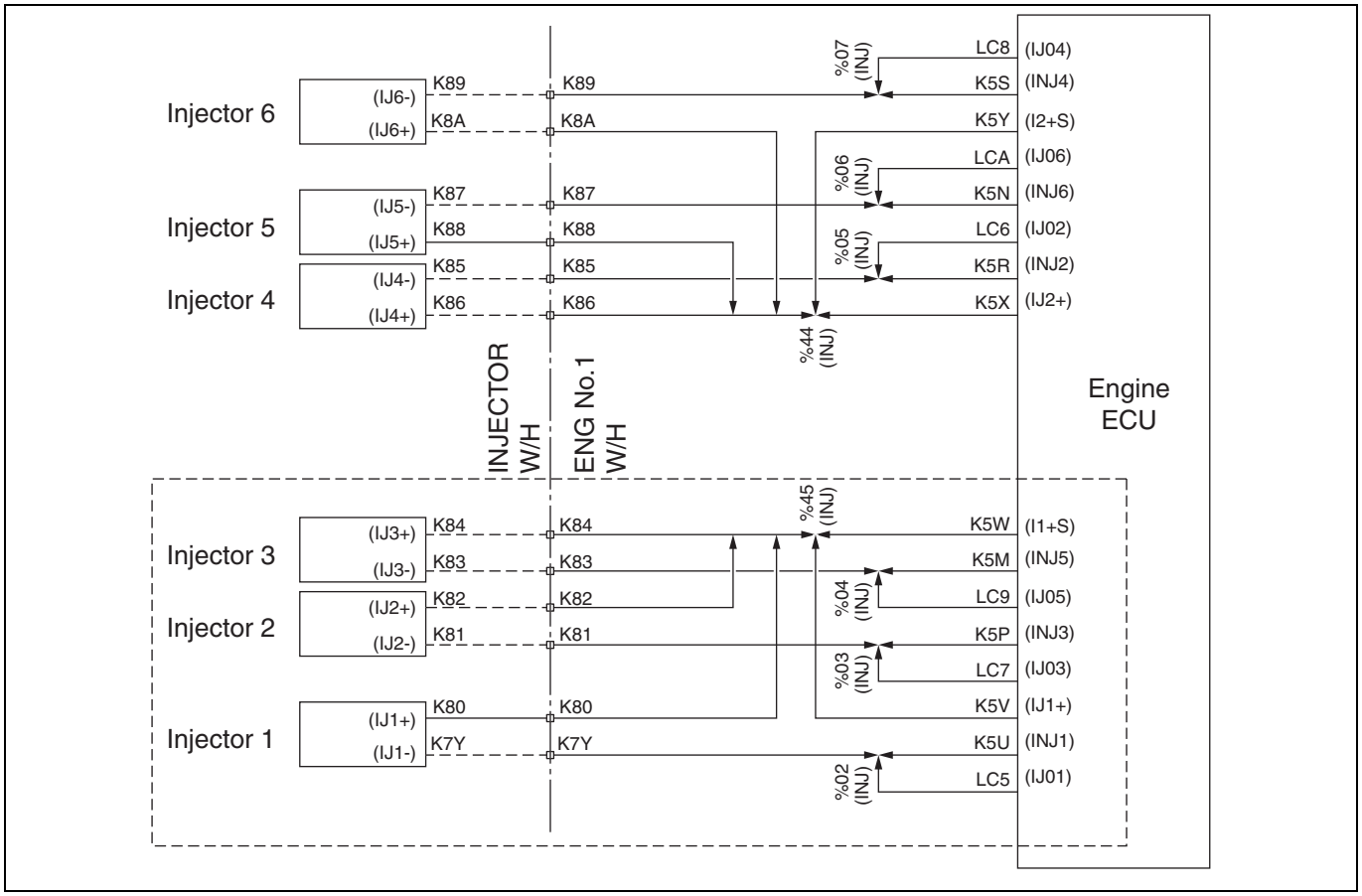


SAPH16F010301003

**1. Technical description**

- The engine ECU controls the fuel injection quantity according to the injector valve-open interval.
- The valve-open interval is adjusted by the magnetic valve.

**<Description of malfunction>**

- Injector drive system common 1 is not working properly.
- Minus side harness may be in short-circuit.

**2. DTC set condition**

(1) DTC detection condition

- Starter switch ON.
- Battery voltage is in the range of 10 V to 16 V.
- Injector is not in operation.
- Engine speed is higher than 0 r/min.

(2) Judgment criteria

- When overcurrent is detected in the injector drive system circuit 2 where +B short circuit is being detected, the fail counter is detected to be full.
  (When the engine speed is 750 r/min: 0.6 seconds * Varies according to engine speed)

**3. Reset condition**

- After normal operation is restored and engine is restarted after having stalled.

**4. Indication, warning or system control regulation when the DTC is set.**

- MIL: ON
- SVS light: OFF
- Engine output is restricted.
- Cruise control function is not available.
- Idling stop system is not available.
- Vehicle start control is not available.

**5. Symptoms on the vehicle when the DTC is set**

**<Symptoms on the vehicle due to backup control (fail safe function)>**

- Engine output is insufficient.
- Cruise control does not work.
- Idling stop system does not work.
- Vehicle start control does not work.

**<Symptoms on the vehicle due to malfunction>**

- –

**6. Pre-inspection work**

- Check that the battery voltage is in the normal range.

**7. After-inspection work**

- Clear all past DTCs.
- Check that no DTC is detected after test drive.

**8. Estimated failure factors**

- Harness disconnection or short-circuit
- Looseness or poor contact of connector
- Injector internal coil disconnection
- Engine ECU failure

## INSPECTION PROCEDURE: P2147 and P2148

| 1 | Inspect the injector connector |
|---|---|

1. Check the connection of the injector connector (Looseness and poor contact).

**Was any failure found?**

**YES**

**Connect securely, repair if needed.**
**Perform "After-inspection work" of INFORMATION section.**

**NO**

**Go to step 2.**

| 2 | Inspect for short-circuit of the injector harness (engine ECU – injector linked-up connector) |
|---|---|

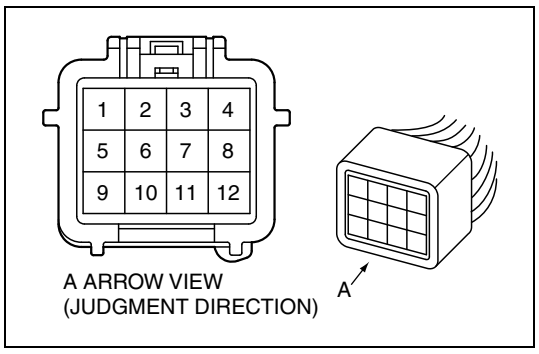


SAPH16F010301004

1. Set the starter switch to the "LOCK" position.
2. Disconnect the injector linked-up connector and engine ECU connector.
3. Use the electrical tester to measure the resistance between each terminal in the injector linked-up connector (ECU side) and ground.

| Measurement conditions | Tester connections | Standard values |
|---|---|---|
| **Starter switch: LOCK** | **Injector linked-up connector (ECU side):**<br>**#1 injector:**<br>**11 terminal – Ground**<br>**12 terminal – Ground**<br>**#2 injector:**<br>**3 terminal – Ground**<br>**4 terminal – Ground**<br>**#3 injector:**<br>**5 terminal – Ground**<br>**6 terminal – Ground** | ∞ Ω |

**Do the measurements meet the standard value?**

| YES | NO |
|---|---|
| **Go to step 3.** | **Repair or replace the harness. Perform "After-inspection work" of INFORMATION section.** |

| 3 | **Inspect for short-circuit of the injector harness (between injector linked-up connector and injector harness connector)** |
|---|---|

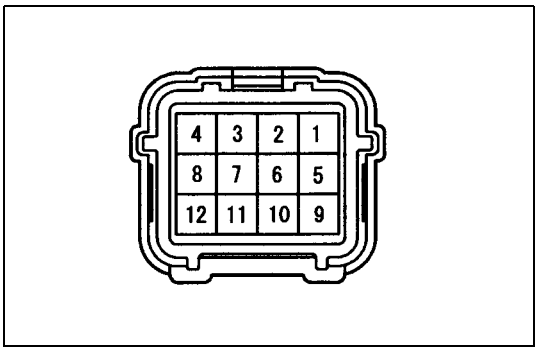


SAPH16F010301005

1. Disconnect the injector harness connector.
2. Use the electrical tester to measure the resistance between each terminal in the injector linked-up connector (engine side) and ground.

| Measurement conditions | Tester connections | Standard values |
|---|---|---|
| **Starter switch: LOCK** | **Injector linked-up connector (engine side): #1 injector: 11 terminal – Ground 12 terminal – Ground #2 injector: 3 terminal – Ground 4 terminal – Ground #3 injector: 5 terminal – Ground 6 terminal – Ground** | ∞ Ω |

**Do the measurements meet the standard value?**

| YES | NO |
|---|---|
| **Go to step 4.** | **Repair or replace the harness. Perform "After-inspection work" of INFORMATION section.** |

| 4 | Inspect disconnection of the injector harness |
|---|---|

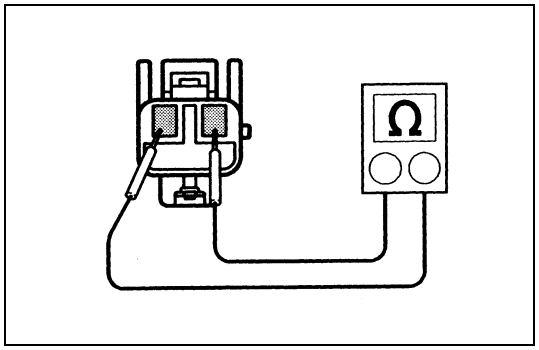


SAPH16F010301006

1. Use the electrical tester to measure the resistance between the #1 – #3 injector harness connector terminals.

| Measurement conditions | Tester connections | Standard values |
|---|---|---|
| Starter switch: LOCK | Between injector harness connector terminals<br>#1 IJ1+ – IJ1-<br>#2 IJ2+ – IJ2-<br>#3 IJ3+ – IJ3- | 20 °C {68 °F}:<br>0.37 – 0.57 Ω |

**Do the measurements meet the standard value?**

**YES**

**Go to step 5.**

**NO**

**Go to step 6.**

| 5 | Inspect the injector unit |
|---|---|

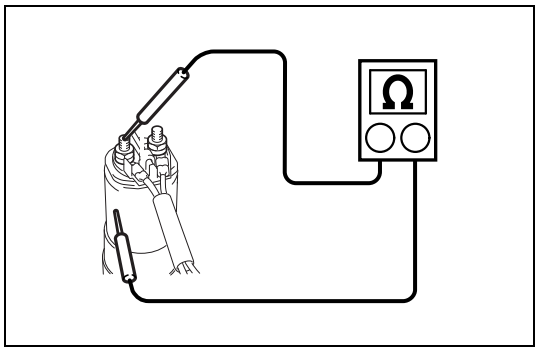


SAPH16F010301007

1. Measure the resistance between the #1 – #3 injector terminals and the injector bodies.

| Measurement conditions | Tester connections | Standard values |
|---|---|---|
| Starter switch: LOCK | Between injector terminal and body | 10 MΩ or more |

**Do the measurements meet the standard value?**

**YES**

**Replace the injector harness.**
**Perform "After-inspection work" of INFORMATION section.**

**NO**

**Replace the injector.**
**Perform "After-inspection work" of INFORMATION section.**

| 6 | Check the DTC detected (Engine ECU) [HINO DX II ] |
|---|---|

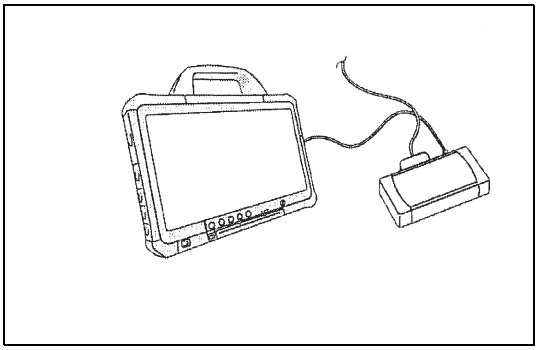

SAPH16F010301008

1. Perform engine warm-up. (engine coolant temperature: 60 °C {140 °F} or more)
2. Stop the engine and set the starter switch to the "LOCK" position.
3. Connect the vehicle to HINO DX II .
4. Set the starter switch to the "ON" position.
5. Select [Engine] and check if the DTC (P2147 or P2148) has been detected.

**Has DTC (P2147 or P2148) been detected?**

**YES**

**Replace the engine ECU.**
**Perform "After-inspection work" of INFORMATION section.**

**NO**

**Procedure completed.**
**Perform "After-inspection work" of INFORMATION section.**

# DTC: P2149

EN01H16F01030F03001160

## P2149: Fuel injector driver circuit 2 - circuit (circuit open)

INFORMATION

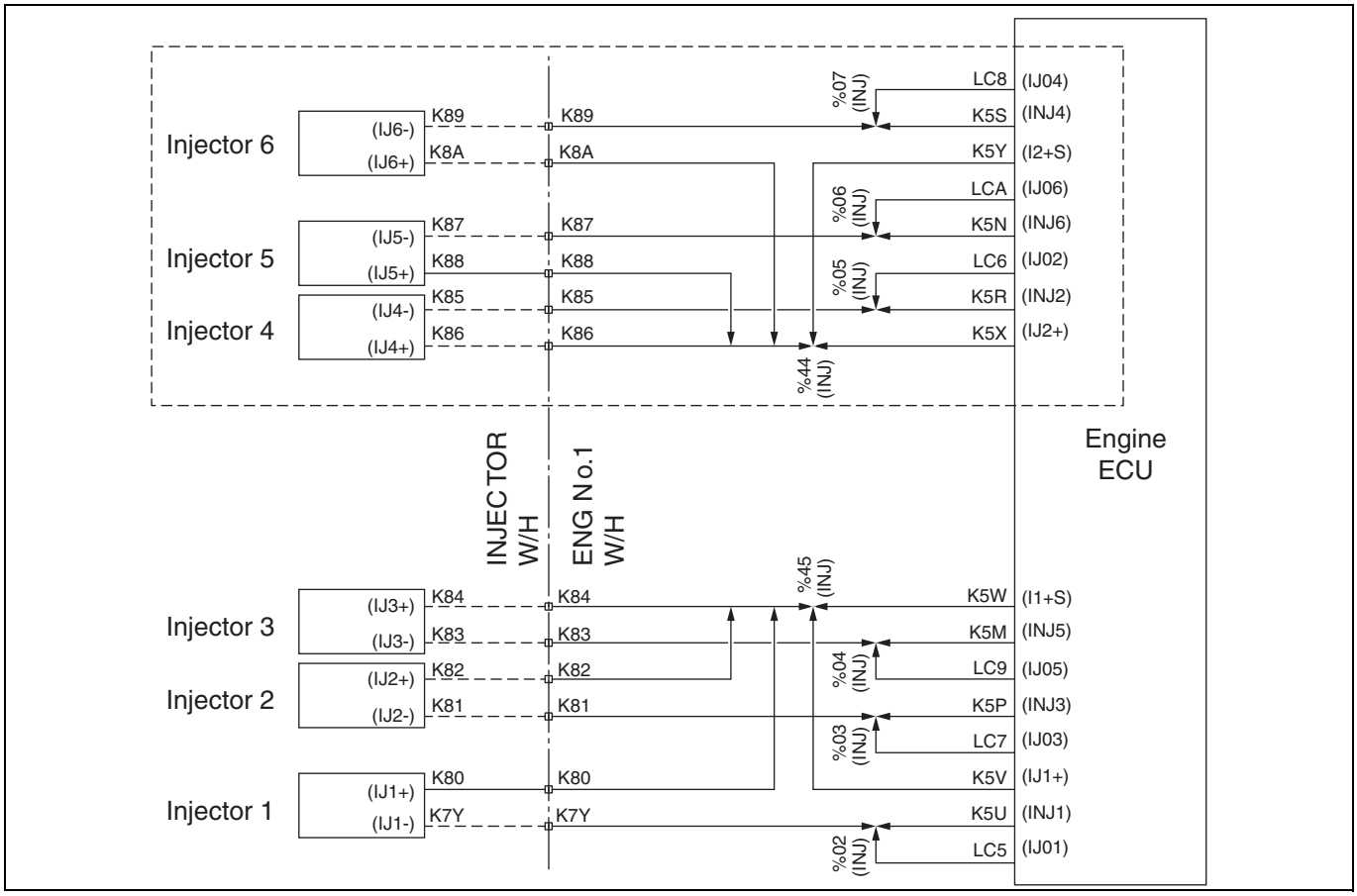


SAPH16F010301009

**1. Technical description**

- The engine ECU controls the fuel injection quantity according to the injector valve-open interval.
- The valve-open interval is adjusted by the magnetic valve.

**<Description of malfunction>**

- Injector drive system common 2 is not working properly.
- Possible short-circuit in plus-side harness

**2. DTC set condition**

(1) DTC detection condition

- Starter switch ON.
- Battery voltage is in the range of 10 V to 16 V.
- Injector is in operation.
- Engine speed is higher than 0 r/min.

(2) Judgment criteria

- When the injector drive system circuit 2 current value is smaller than 16 A, the fail count is detected with the full count. (When the engine speed is 750 r/min: 0.6 seconds * Varies according to engine speed)

**3. Reset condition**

- After normal operation is restored and engine is restarted after having stalled.

**4. Indication, warning or system control regulation when the DTC is set.**

- MIL: ON
- SVS light: OFF
- Engine output is restricted.
- Cruise control function is not available.
- Idling stop system is not available.
- Vehicle start control is not available.

**5. Symptoms on the vehicle when the DTC is set**

**<Symptoms on the vehicle due to backup control (fail safe function)>**

- Engine output is insufficient.
- Cruise control does not work.
- Idling stop system does not work.
- Vehicle start control does not work.

**<Symptoms on the vehicle due to malfunction>**

- –

**6. Pre-inspection work**

- Check that the battery voltage is in the normal range.

**7. After-inspection work**

- Clear all past DTCs.
- Check that no DTC is detected after test drive.

**8. Estimated failure factors**

- Disconnection or short-circuit in sensor harness
- Irregular contact (disconnection or poor fit of connector)
- Injector internal coil disconnection
- Engine ECU failure

## INSPECTION PROCEDURE: P2149

| 1 | Inspect the injector connector |
|---|---|

1. Check the connection of the injector connector (Looseness and poor contact).

**Was any failure found?**

**YES**

**Connect securely, repair if needed.**
**Perform "After-inspection work" of INFORMATION section.**

**NO**

**Go to step 2.**

| 2 | Inspect the injector power supply |
|---|---|

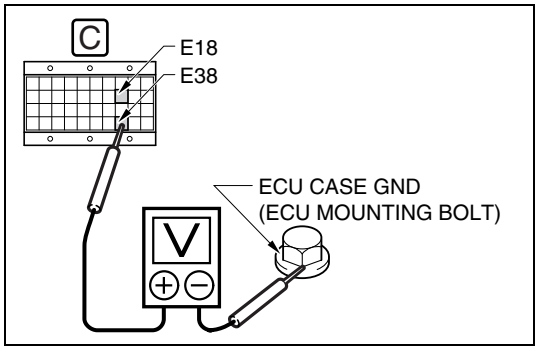


SAPH16F010301010

1. Set the starter switch to the "LOCK" position.
2. Connect the signal check harness to the engine ECU.
3. Set the starter switch to the "ON" position.
4. Use the electrical tester to measure the voltage between the terminals of the engine ECU (signal check harness) and ground.

| Measurement conditions | Tester connections | Standard values |
|---|---|---|
| Starter switch: ON | Engine ECU (signal check harness) IJ2+(E18) – Ground<br>I2+S(E38) – Ground | At least 3/4 of battery voltage |

**Do the measurements meet the standard value?**

**YES**

**Go to step 3.**

**NO**

**Go to step 7.**

| 3 | Inspect the injector wire harness power supply (engine ECU – injector linked-up connector) |
|---|---|

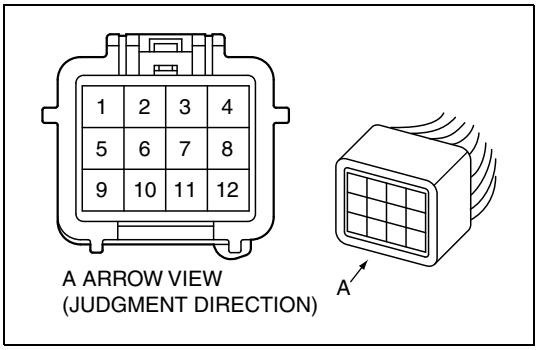


SAPH16F010301011

1. Set the starter switch to the "LOCK" position.
2. Disconnect the injector linked-up connector.
3. Set the starter switch to the "ON" position.
4. Use the electrical tester to measure the voltage between each terminal in the injector linked-up connector (ECU side) and ground.

| Measurement conditions | Tester connections | Standard values |
|---|---|---|
| **Starter switch: ON** | **Injector linked-up connector (ECU side):<br>#4 injector:<br>7 terminal – Ground<br>#5 injector:<br>2 terminal – Ground<br>#6 injector:<br>10 terminal – Ground** | **8 V or less** |

**Do the measurements meet the standard value?**

**YES**

**Go to step 4.**

**NO**

**Repair or replace the harness.**
**Perform "After-inspection work" of INFORMATION section.**

| 4 | Inspect for short-circuit of the injector wire harness (between injector linked-up connector and injector harness connector) |
|---|---|

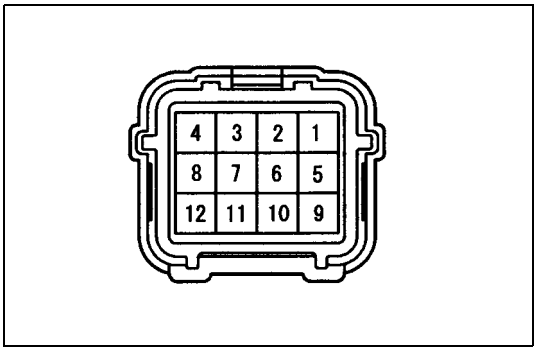


SAPH16F010301012

1. Set the starter switch to the "LOCK" position.
2. Disconnect the injector harness connector.
3. Use the electrical tester to measure the resistance between each terminal in the injector linked-up connector (engine side) and ground.

| Measurement conditions | Tester connections | Standard values |
|---|---|---|
| **Starter switch: LOCK** | **Injector linked-up connector (engine side): #4 injector: 7 terminal – Ground #5 injector: 2 terminal – Ground #6 injector: 10 terminal – Ground** | **∞ Ω** |

**Do the measurements meet the standard value?**

**YES**

**Go to step 5.**

**NO**

**Repair or replace the harness. Perform "After-inspection work" of INFORMATION section.**

| 5 | Inspect disconnection of the injector harness |
|---|---|

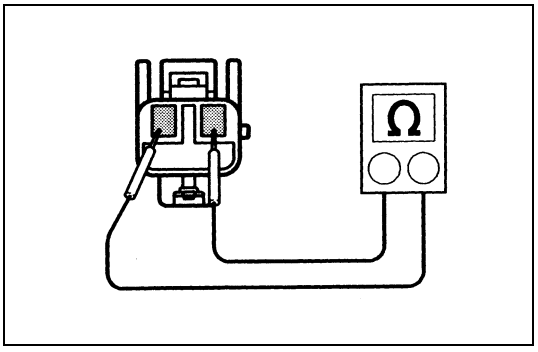


SAPH16F010301013

1. Disconnect the injector harness connector.
2. Use the electrical tester to measure the resistance between #4 – #6 injector harness connector terminals.

| Measurement conditions | Tester connections | Standard values |
|---|---|---|
| **Starter switch: LOCK** | **Between injector harness connector terminals #4 IJ4+ – IJ4- #5 IJ5+ – IJ5- #6 IJ6+ – IJ6-** | **20 °C {68 °F}: 0.37 – 0.57 Ω** |

**Do the measurements meet the standard value?**

YES

**Go to step 7.**

NO

**Go to step 6.**

## 6 Inspect the injector unit

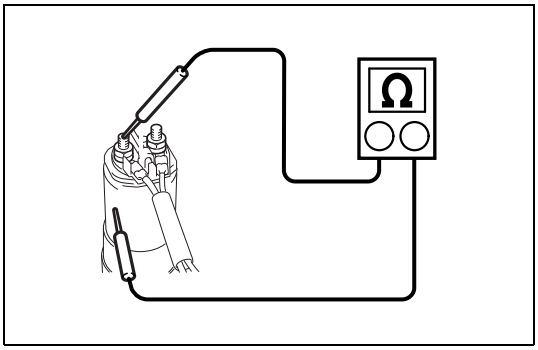

SAPH16F010301014

1. Measure the resistance between the #4 – #6 injector terminals and the injector bodies.

| Measurement conditions | Tester connections | Standard values |
|---|---|---|
| Starter switch: LOCK | Between injector terminal and body | 10 MΩ or more |

**Do the measurements meet the standard value?**

YES

**Go to step 7.**

NO

**Replace the injector.**
**Perform "After-inspection work" of INFORMATION section.**

## 7 Check the DTC detected (Engine ECU) [HINO DX II ]

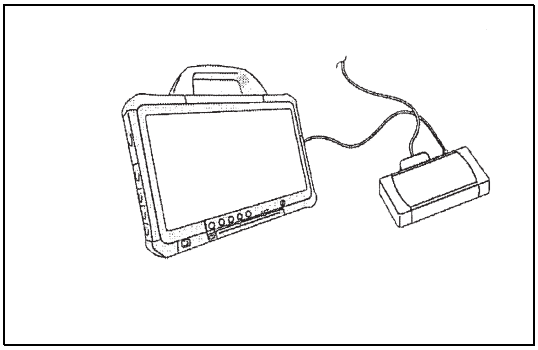

SAPH16F010301015

1. Perform engine warm-up. (engine coolant temperature: 60 °C {140 °F} or more)
2. Stop the engine and set the starter switch to the "LOCK" position.
3. Connect the vehicle to HINO DX II .
4. Set the starter switch to the "ON" position.
5. Select [Engine] and check if P2149 has been detected.

**Has DTC P2149 been detected?**

YES

**Replace the engine ECU.**
**Perform "After-inspection work" of INFORMATION section.**

NO

**Procedure completed.**
**Perform "After-inspection work" of INFORMATION section.**

# DTC: P2150 and P2151

EN01H16F01030F03001161

## P2150: Fuel injector driver circuit 2 - circuit (circuit low)

INFORMATION

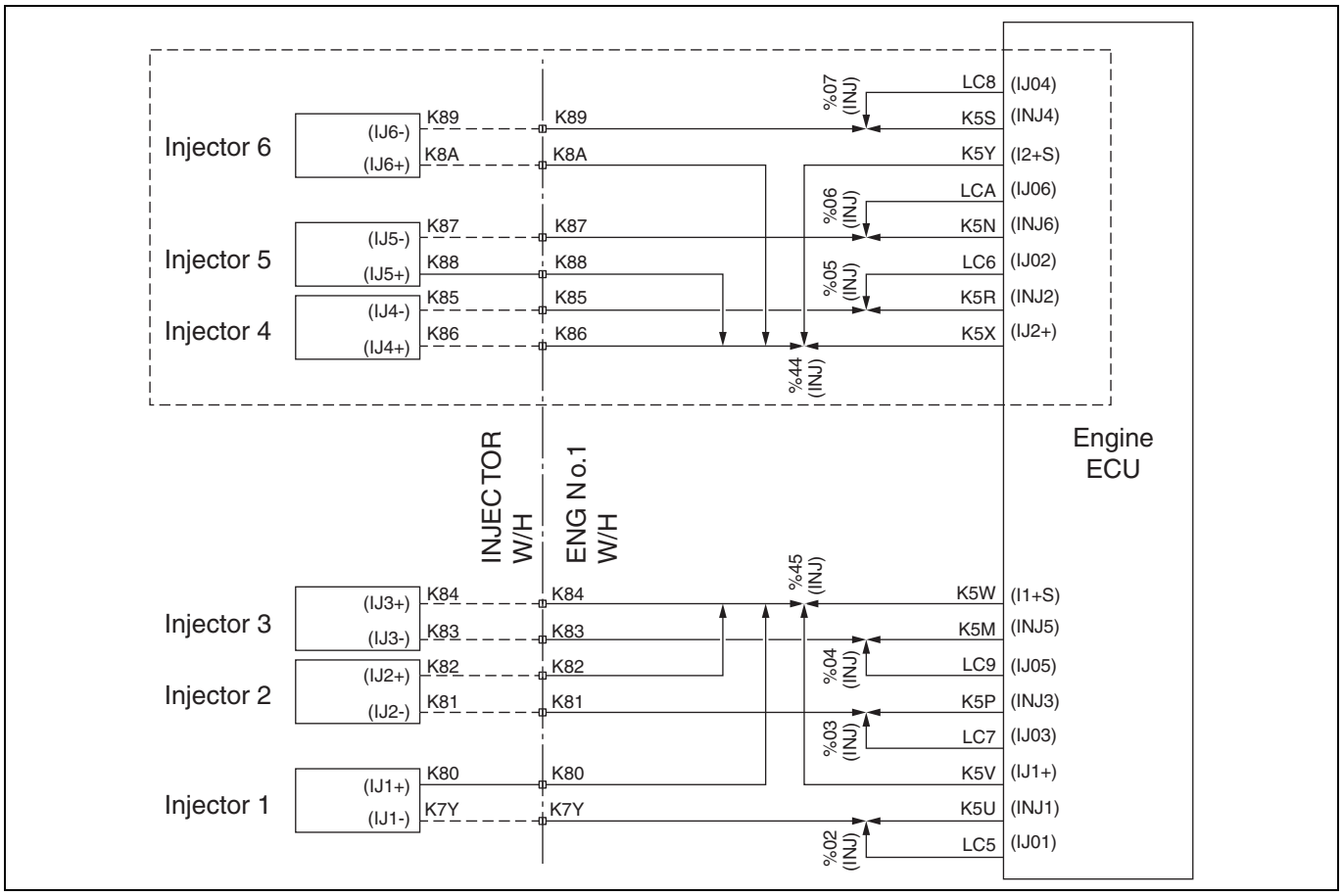


SAPH16F010301016

**1. Technical description**

- The engine ECU controls the fuel injection quantity according to the injector valve-open interval.
- The valve-open interval is adjusted by the magnetic valve.

**<Description of malfunction>**

- Injector drive system common 2 is not working properly.
- Possible short-circuit in minus-side harness

**2. DTC set condition**

(1) DTC detection condition

- Starter switch ON.
- Battery voltage is in the range of 10 V to 16 V.
- Injector is in operation.
- Engine speed is higher than 0 r/min.

(2) Judgment criteria

- When overcurrent is detected in the injector drive system circuit 2 where +B short circuit is being detected, the fail counter is detected to be full.
  (When the engine speed is 750 r/min: 0.6 seconds * Varies according to engine speed)

**3. Reset condition**

- After normal operation is restored and engine is restarted after having stalled.

**4. Indication, warning or system control regulation when the DTC is set.**

- MIL: ON
- SVS light: OFF
- Engine output is restricted.
- Cruise control function is not available.
- Idling stop system is not available.
- Vehicle start control is not available.

**5. Symptoms on the vehicle when the DTC is set**

**<Symptoms on the vehicle due to backup control (fail safe function)>**

- Engine output is insufficient.
- Cruise control does not work.
- Idling stop system does not work.
- Vehicle start control does not work.

**<Symptoms on the vehicle due to malfunction>**

- –

**6. Pre-inspection work**

- Check that the battery voltage is in the normal range.

**7. After-inspection work**

- Clear all past DTCs.
- Check that no DTC is detected after test drive.

**8. Estimated failure factors**

- Disconnection or short-circuit in sensor harness
- Irregular contact (disconnection or poor fit of connector)
- Injector internal coil disconnection
- Engine ECU failure

## P2151: Fuel injector driver circuit 2 - circuit (circuit high)

INFORMATION

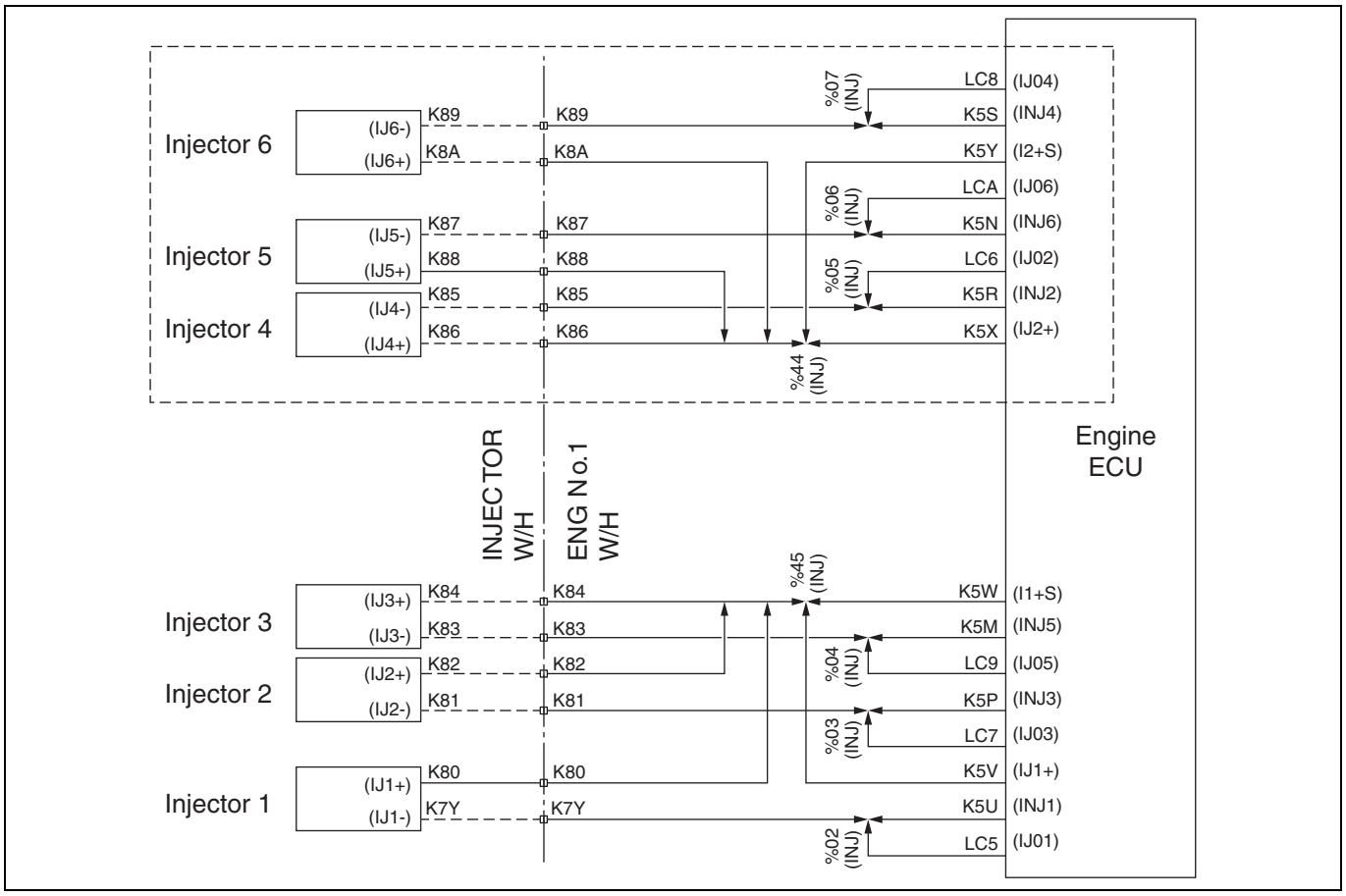


SAPH16F010301017

**1. Technical description**

- The engine ECU controls the fuel injection quantity according to the injector valve-open interval.
- The valve-open interval is adjusted by the magnetic valve.

**<Description of malfunction>**

- Injector drive system common 2 is not working properly.
- Possible short-circuit in minus-side harness

**2. DTC set condition**

(1) DTC detection condition

- Starter switch ON.
- Battery voltage is in the range of 10 V to 16 V.
- Injector is not in operation.
- Engine speed is higher than 0 r/min.

(2) Judgment criteria

- When overcurrent is detected in the injector drive system circuit 2 where +B short circuit is being detected, the fail counter is detected to be full.
  (When the engine speed is 750 r/min: 0.6 seconds * Varies according to engine speed)

**3. Reset condition**

- After normal operation is restored and engine is restarted after having stalled.

**4. Indication, warning or system control regulation when the DTC is set.**

- MIL: ON
- SVS light: OFF
- Engine output is restricted.
- Cruise control function is not available.
- Idling stop system is not available.
- Vehicle start control is not available.

**5. Symptoms on the vehicle when the DTC is set**

**<Symptoms on the vehicle due to backup control (fail safe function)>**

- Engine output is insufficient.
- Cruise control does not work.
- Idling stop system does not work.
- Vehicle start control does not work.

**<Symptoms on the vehicle due to malfunction>**

- –

**6. Pre-inspection work**

- Check that the battery voltage is in the normal range.

**7. After-inspection work**

- Clear all past DTCs.
- Check that no DTC is detected after test drive.

**8. Estimated failure factors**

- Disconnection or short-circuit in sensor harness
- Irregular contact (disconnection or poor fit of connector)
- Injector internal coil disconnection
- Engine ECU failure

## INSPECTION PROCEDURE: P2150 and P2151

| 1 | Inspect the injector connector |
|---|---|

1. Check the connection of the injector connector (Looseness and poor contact).

**Was any failure found?**

**YES**

**Connect securely, repair if needed.**
**Perform "After-inspection work" of INFORMATION section.**

**NO**

**Go to step 2.**

| 2 | Inspect for short-circuit of the injector harness (engine ECU – injector linked-up connector) |
|---|---|

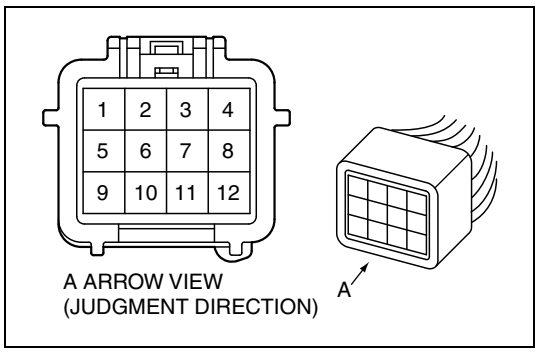


SAPH16F010301018

1. Set the starter switch to the "LOCK" position.
2. Disconnect the injector linked-up connector and engine ECU connector.
3. Use the electrical tester to measure the resistance between each terminal in the injector linked-up connector (ECU side) and ground.

| Measurement conditions | Tester connections | Standard values |
|---|---|---|
| **Starter switch: LOCK** | **Injector linked-up connector (ECU side):**<br>**#4 injector:**<br>**7 terminal – Ground**<br>**8 terminal – Ground**<br>**#5 injector:**<br>**1 terminal – Ground**<br>**2 terminal – Ground**<br>**#6 injector:**<br>**9 terminal – Ground**<br>**10 terminal – Ground** | ∞ Ω |

**Do the measurements meet the standard value?**

| YES | NO |
|---|---|
| **Go to step 3.** | **Repair or replace the harness. Perform "After-inspection work" of INFORMATION section.** |

| 3 | **Inspect for short-circuit of the injector wire harness (between injector linked-up connector and injector harness connector)** |
|---|---|

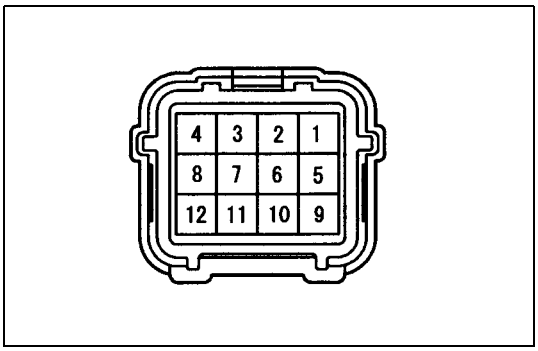


SAPH16F010301019

1. Disconnect the injector harness connector.
2. Use the electrical tester to measure the resistance between each terminal in the injector linked-up connector (engine side) and ground.

| Measurement conditions | Tester connections | Standard values |
|---|---|---|
| **Starter switch: LOCK** | **Injector linked-up connector (engine side): #4 injector: 7 terminal – Ground 8 terminal – Ground #5 injector: 1 terminal – Ground 2 terminal – Ground #6 injector: 9 terminal – Ground 10 terminal – Ground** | ∞ Ω |

**Do the measurements meet the standard value?**

| YES | NO |
|---|---|
| **Go to step 4.** | **Repair or replace the harness. Perform "After-inspection work" of INFORMATION section.** |

| 4 | Inspect disconnection of the injector harness |
|---|---|

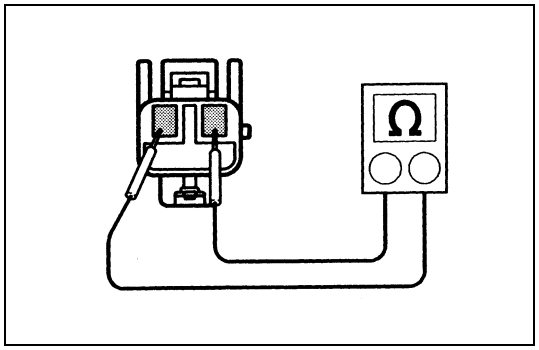


SAPH16F010301020

1. Use the electrical tester to measure the resistance between the #4 – #6 injector harness connector terminals.

| Measurement conditions | Tester connections | Standard values |
|---|---|---|
| Starter switch: LOCK | Between injector harness connector terminals<br>#4 IJ4- – IJ4+<br>#5 IJ5- – IJ5+<br>#6 IJ6- – IJ6+ | 20 °C {68 °F}:<br>0.37 – 0.57 Ω |

**Do the measurements meet the standard value?**

**YES**

**Go to step 5.**

**NO**

**Go to step 6.**

| 5 | Inspect the injector unit |
|---|---|

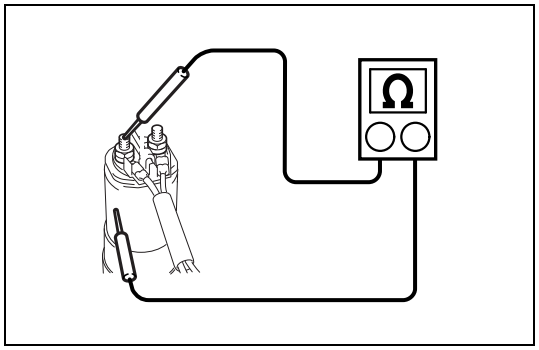


SAPH16F010301021

1. Measure the resistance between the #4 – #6 injector terminals and the injector bodies.

| Measurement conditions | Tester connections | Standard values |
|---|---|---|
| Starter switch: LOCK | Between injector terminal and body | 10 MΩ or more |

**Do the measurements meet the standard value?**

**YES**

**Replace the injector harness.**
**Perform "After-inspection work" of INFORMATION section.**

**NO**

**Replace the injector.**
**Perform "After-inspection work" of INFORMATION section.**

| 6 | Check the DTC detected (Engine ECU) [HINO DX II ] |
|---|---|

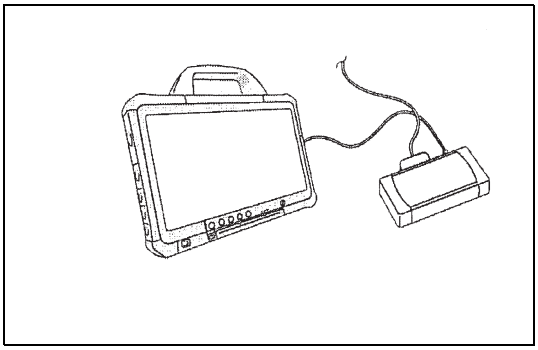

SAPH16F010301022

1. Perform engine warm-up. (engine coolant temperature: 60 °C {140 °F} or more)
2. Stop the engine and set the starter switch to the "LOCK" position.
3. Connect the vehicle to HINO DX II .
4. Set the starter switch to the "ON" position.
5. Select [Engine] and check if DTC P2150 or 2151 has been detected.

**Has DTC P2150 or 2151 been detected?**

**YES**

**Replace the engine ECU.**
**Perform "After-inspection work" of INFORMATION section.**

**NO**

**Procedure completed.**
**Perform "After-inspection work" of INFORMATION section.**

# DTC: P2184 and P2185

EN01H16F01030F03001162

## P2184: Engine coolant temperature sensor 2 - out of range (Out of range low)

INFORMATION

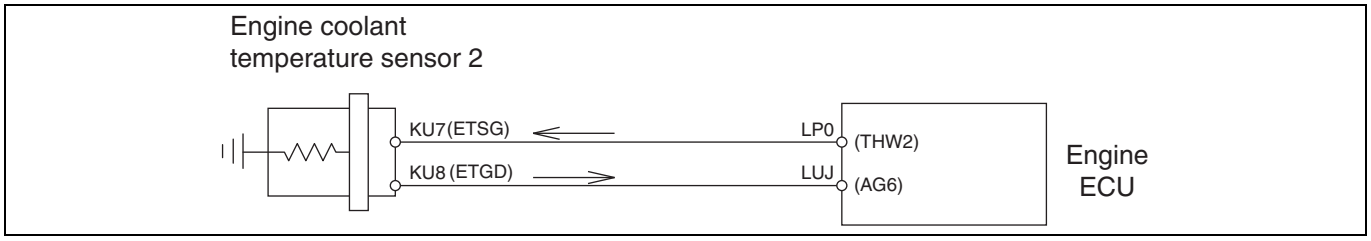


SAPH16F010301023

**1. Technical description**

- Engine coolant temperature sensor 2 is installed in a thermostat case and constantly measures the engine coolant temperature.

**<Description of malfunction>**

- Engine coolant temperature cannot be correctly recognized.

**2. DTC set condition**

(1) DTC detection condition

- Starter switch is inactive to the "ON" position.
- Battery voltage is in the range of 10 V to 16 V.

Above conditions continue for at least 5 seconds.

(2) Judgment criteria

- Engine coolant temperature sensor 2 output is 0.1 V (139 °C {282.2 °F}) or less, and this condition continues for at least 3 seconds.

**3. Reset condition**

- After restoration to normal condition.

**4. Indication, warning or system control regulation when the DTC is set.**

- MIL: ON
- SVS light: OFF
- Engine output is restricted.
- Cruise control function is not available.
- Idling stop system is not available.
- Vehicle start control is not available.

**5. Symptoms on the vehicle when the DTC is set**

**<Symptoms on the vehicle due to backup control (fail safe function)>**

- Engine output is insufficient.
- Cruise control does not work.
- Idling stop system does not work.
- Vehicle start control does not work.

**<Symptoms on the vehicle due to malfunction>**

- –

**6. Pre-inspection work**

- Check that the battery voltage is in the normal range.

**7. After-inspection work**

- Clear all past DTCs.
- Check that no DTC is detected after test drive.

**8. Estimated failure factors**

- Sensor is disconnected or sensing unit is malfunctioning (due to dirt, clogging, damage, etc.)
- Abnormal sensor resistance
- Engine ECU sensor power supply failure or internal circuit failure
- Harness disconnection or short-circuit
- Looseness or poor contact of the connector

## P2185: Engine coolant temperature sensor 2 - out of range (Out of range high)

INFORMATION

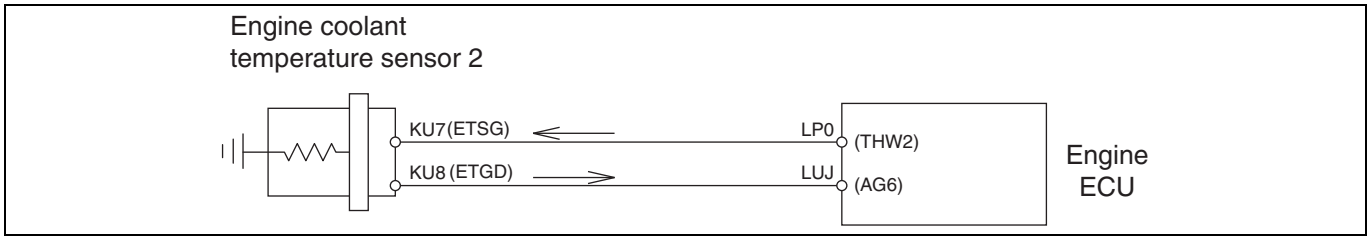


SAPH16F010301024

**1. Technical description**

- Engine coolant temperature sensor 2 is installed in a thermostat case and constantly measures the engine coolant temperature.

**<Description of malfunction>**

- Engine coolant temperature cannot be correctly recognized.

**2. DTC set condition**

(1) DTC detection condition

- Starter switch is inactive to the "ON" position.
- Battery voltage is in the range of 10 V to 16 V.

Above conditions continue for at least 5 seconds.

(2) Judgment criteria

- Engine coolant temperature sensor 2 output is at least 4.77 V (-37 °C {-35 °F}), and this condition continues for at least 3 seconds.

**3. Reset condition**

- After restoration to normal condition.

**4. Indication, warning or system control regulation when the DTC is set.**

- MIL: ON
- SVS light: OFF
- Engine output is restricted.
- Cruise control function is not available.
- Idling stop system is not available.
- Vehicle start control is not available.

**5. Symptoms on the vehicle when the DTC is set**

**<Symptoms on the vehicle due to backup control (fail safe function)>**

- Engine output is insufficient.
- Cruise control does not work.
- Idling stop system does not work.
- Vehicle start control does not work.

**<Symptoms on the vehicle due to malfunction>**

- –

**6. Pre-inspection work**

- Check that the battery voltage is in the normal range.

**7. After-inspection work**

- Clear all past DTCs.
- Check that no DTC is detected after test drive.

**8. Estimated failure factors**

- Abnormal resistance of the sensor
- Engine ECU sensor power supply failure or internal circuit failure
- Harness disconnection or short-circuit
- Looseness or poor contact of connector
- Sensor internal short-circuit

## INSPECTION PROCEDURE: P2184 and P2185

**1 Inspect the engine coolant temperature sensor 2 connector**

1. Check the connection of the engine coolant temperature sensor 2 connector (Looseness and poor contact).

**Was any failure found?**

**YES**

**Connect securely, repair if needed.**
**Perform "After-inspection work" of INFORMATION section.**

**NO**

**Go to step 2.**

**2 Inspect the engine coolant temperature sensor 2**

1. Check the installation of the engine coolant temperature sensor 2.
2. Make sure there is no dirt or damage to the engine coolant temperature sensor 2.

**Was any failure found?**

**YES**

**Clean the engine coolant temperature sensor 2 and install it properly.**
**If damaged, replace the engine coolant temperature sensor 2.**
**Perform "After-inspection work" of INFORMATION section.**

**NO**

**Go to step 3.**

**3 Inspect the engine coolant temperature sensor 2 unit**

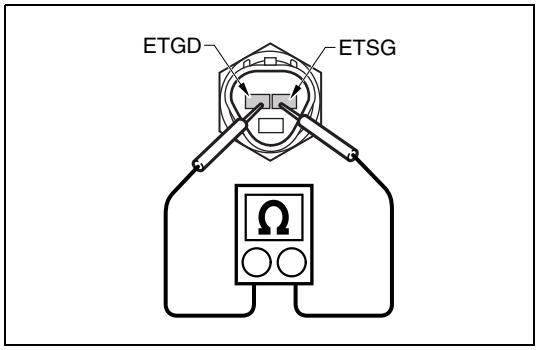


SAPH16F010301025

1. Set the starter switch to the "LOCK" position.
2. Disconnect the engine coolant temperature sensor 2 connector.
3. Use the electrical tester to measure the resistance between the terminals of the engine coolant temperature sensor 2 connector.

| Measurement conditions | Tester connections | Standard values |
|---|---|---|
| Starter switch: LOCK | Engine coolant temperature sensor 2 ETSG – ETGD | 20 °C {68 °F}: 2.59 – 2.32 kΩ<br>80 °C {176 °F}: 0.326 – 0.310 kΩ |

**Do the measurements meet the standard value?**

| YES | NO |
|---|---|
| **Go to step 4.** | **Replace the engine coolant temperature sensor 2.**<br>**Perform "After-inspection work" of INFORMATION section.** |

## 4 Inspect the engine coolant temperature sensor 2 power supply

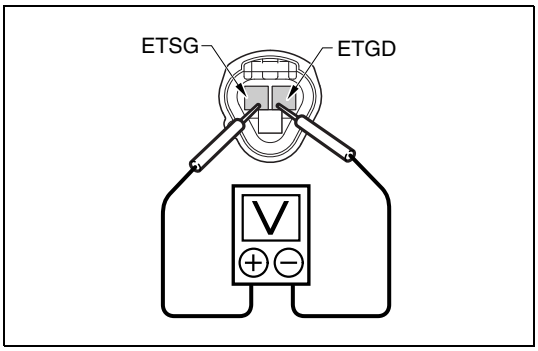


SAPH16F010301026

1. Set the starter switch to the "ON" position.
2. Use the electrical tester to measure the voltage between the terminals of the engine coolant temperature sensor 2 vehicle-side connector.

| Measurement conditions | Tester connections | Standard values |
|---|---|---|
| **Starter switch: ON** | **Engine coolant temperature sensor 2 vehicle-side connector<br>ETSG – ETGD** | **4.5 – 5.5 V** |

**Do the measurements meet the standard value?**

| YES | NO |
|---|---|
| **Go to step 7.** | **Go to step 5.** |

## 5 Inspect for short-circuit of the engine coolant temperature sensor 2 wire harness

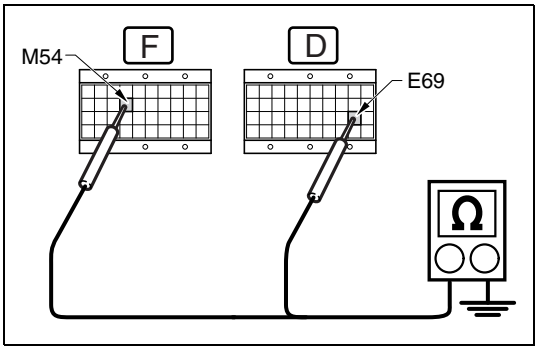


SAPH16F010301027

1. Set the starter switch to the "LOCK" position.
2. Connect the signal check harness to the engine ECU vehicle-side harness. (Do not connect harness to the ECU.)
3. Use the electrical tester to measure the resistance between each terminal in the engine ECU (signal check harness) and ground.

| Measurement conditions | Tester connections | Standard values |
|---|---|---|
| **Starter switch: LOCK** | **Engine ECU (signal check harness)<br>THW2(E69) – Ground<br>AG6(M54) – Ground** | **∞ Ω** |

**Do the measurements meet the standard value?**

**YES**

**Go to step 6.**

**NO**

**Repair or replace the harness.**
**Perform "After-inspection work" of INFORMATION section.**

## 6 Inspect disconnection of the wire harness of engine coolant temperature sensor 2

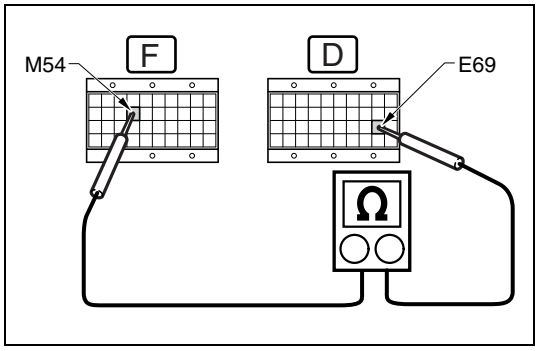

SAPH16F010301028

1. Connect the engine coolant temperature sensor 2 connector.
2. Use the electrical tester to measure the resistance between the terminals in the engine ECU (signal check harness).

| Measurement conditions | Tester connections | Standard values |
|---|---|---|
| Starter switch: LOCK | Engine ECU (signal check harness) THW2(E69) – AG6(M54) | 20 °C {68 °F}: 2.59 – 2.32 kΩ<br>80 °C {176 °F}: 0.326 – 0.310 kΩ |

**Do the measurements meet the standard value?**

**YES**

**Go to step 7.**

**NO**

**Repair or replace the harness.**
**Perform "After-inspection work" of INFORMATION section.**

| 7 | Check the DTC detected (Engine ECU) [HINO DX II ] |
|---|---|

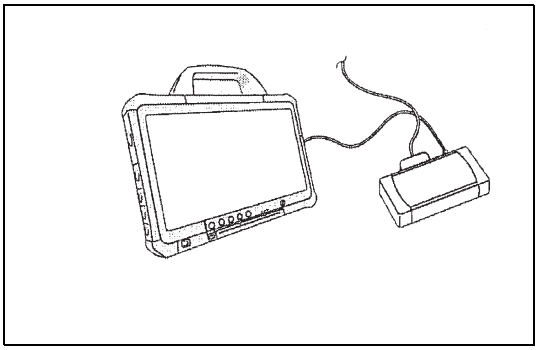

SAPH16F010301029

1. Warm-up the engine. (engine coolant temperature: 60 °C {140 °F} or more)
2. Stop the engine and set the starter switch to the "LOCK" position.
3. Connect the vehicle to HINO DX II .
4. Set the starter switch to the "ON" position.
5. Select [Engine] and check if DTC P2184 or 2185 has been detected.

**Has DTC P2184 or 2185 been detected?**

**YES**

**Replace the engine ECU.**
**Perform "After-inspection work" of INFORMATION section.**

**NO**

**Procedure completed.**
**Perform "After-inspection work" of INFORMATION section.**

# DTC: P2201

EN01H16F01030F03001163

## P2201: NOx sensor (SCR upstream) - Performance

INFORMATION

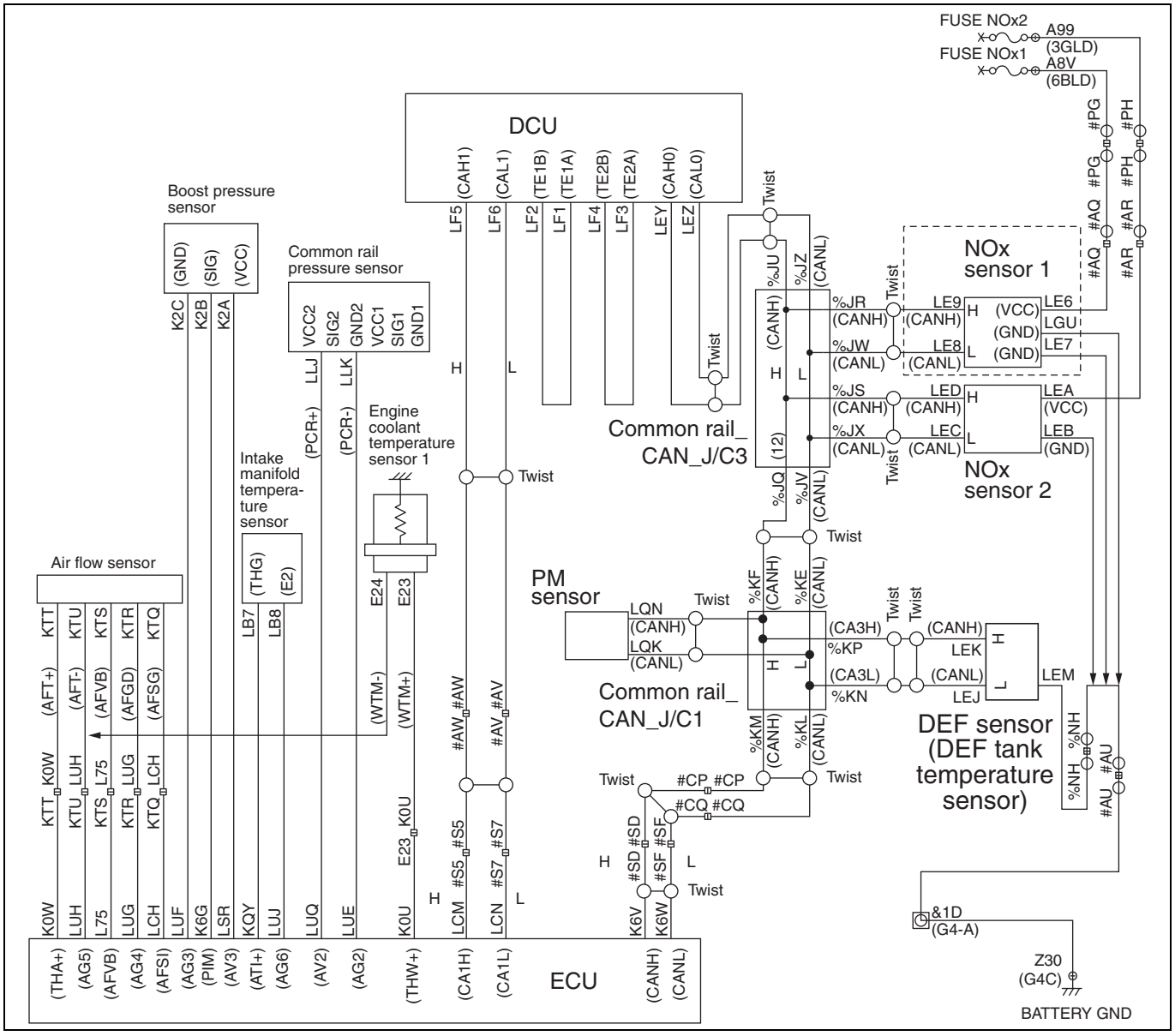


SAPH16F010301030

**1. Technical description**

- NOx sensor 1 (SCR upstream) confirms correct value by comparing with the actual NOx sensor 1 (SCR upstream) value, the NOx sensor 2 (SCR downstream) value and the NOx model value calculated by the ECU.
- NOx model value is calculated according to the engine's state and properties.
- At low NOx concentration, NOx sensor 1 (SCR upstream) confirms correct value by comparing with the Judgement criteria.

**Description of malfunction**

- Characteristics failure of NOx sensor 1 (SCR upstream) is detected.

**2. DTC set condition**

(1) DTC detection condition

- DPF active regeneration in process.
- DPF upstream temperature ≥ 400 °C {752 °F}
- 75 kPa ≤ Barometric pressure ≤ 112 kPa
- -7 °C {19.4 °F} ≤ Intake air temperature (build-in air flow sensor) ≤ 49 °C {120 °F}
- 55 °C {131 °F} ≤ Engine coolant temperature ≤ 100 °C {212 °F}
- NOx sensor (SCR upstream) is valid.
- NOx sensor (SCR downstream) is valid.

Conditions below continue for 5 sec

- 100 ppm ≤ Calculated NOx (SCR upstream) ≤ 1,500 ppm
- |ΔCalculated NOx (SCR upstream)| ≤ 1,172 ppm/sec
- 300 kg/h ≤ Exhaust gas mass flow < 1,000 kg/h
- Fuel injection quantity ≥ 5 $mm^3$/st

<At low NOx concentration>

Conditions below continue for 10 sec

- NOx sensor (SCR upstream) is valid.
- 120 °C {248 °F} < SCR catalyst temperature < 170 °C {338 °F}
- DPF active regeneration in not process.
- Estimated current $NH_3$ load in SCR – Normal value of $NH_3$ load in SCR ≤ 0 g
- -0.5 °C {31 °F}/sec ≤ SCR catalyst temperature gradient ≤ 0.25 °C {32 °F}/sec
- 1,000 r/min ≤ Engine speed ≤ 3,000 r/min

Cumulative Exhaust gas mass flow > 1,000 g from Fuel injection quantity ≤ 0 $mm^3$/st.

(2) Judgment criteria

All of the three conditions described below are formed. (judgment time : 10 sec)

- Average actual NOx (from NOx sensor 1 (SCR upstream)) / Average calculated NOx (SCR upstream) : Out of range (< 0.4 or > 4)

<At low NOx concentration>

When any of the following conditions is satisfied, and has continued for 5 seconds.

- Average actual NOx (from NOx sensor 1 (SCR upstream)) is above 40 ppm
- Average actual NOx (from NOx sensor 1 (SCR upstream)) is below -40 ppm

**3. Reset condition**

- After having restored to the normal conditions.

**4. Indication, warning or system control regulation when the DTC is set.**

- MIL: ON
- SVS Light: OFF
- DEF injection is stopped.
- NOx reduction quantity monitoring is aborted.

**5. Symptoms on the vehicle when the DTC is set**

**Symptoms on the vehicle due to backup control (fail safe function)**

- Exhaust gas purification function is declined.

**Symptoms on the vehicle due to malfunction**

- –

**6. Pre-inspection work**

- Check if the battery voltage is in the normal range.

**7. After-inspection work**

- Clear all past DTCs.
- After starting the DPR automatic regeneration, form the DTC detection condition.
- Check if no DTC is stored after test drive.

**8. Estimated failure factors**

- Harness disconnection or short-circuit
- Failure of NOx sensor 1 (SCR upstream)
- NOx sensor 2 (SCR downstream) failure
  - Sensor internal circuit failure
  - NOx sensor controller failure
- Failure of sensor used in calculating model value:
  - Air flow sensor
  - Boost pressure sensor
  - Intake manifold temperature sensor
  - Engine coolant temperature sensor
  - EGR failure

## INSPECTION PROCEDURE: P2201

| 1 | Check the DTC detected [HINO DX II ] |
|---|---|

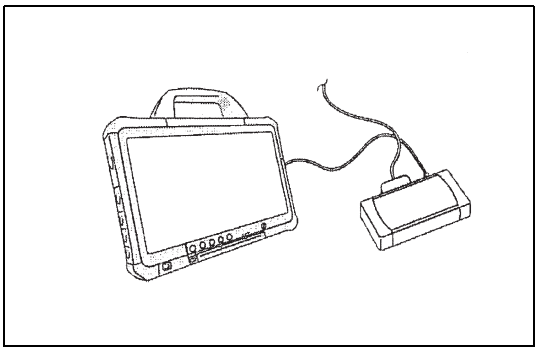

SAPH16F010301031

1. Set the starter switch to the "LOCK" position.
2. Connect the diagnostic system (HINO DX II ) to the vehicle.
3. Set the starter switch to the "ON" position.
4. Select [Engine] on the screen of HINO DX II and check it the DTC P2201 has been detected.

**Has any DTC related to P2201 been detected?**

**YES**

**Go to diagnosis procedure of the related DTC.**
**After repair, go to step 2.**

**NO**

**Go to step 2.**

| 2 | Inspect the DEF |
|---|---|

1. Check the DEF concentration.

| Standard values |
|---|
| 31.8 – 33.2 % (DEF value (Brand new)) |

**Are the measurements excessively different?**

**YES**

**If the DEF concentration is excessively different**
**from the reference value, replace the DEF. Leave the starter switch to the "ON" position, drain the DEF through the tank drain, and then refill the tank with at least 5 liters {1.3 gallons} of DEF.**
**Afterward, drive the vehicle and confirm that the problem does not recur under driving conditions. Perform "After-inspection work" of INFORMATION section.**

**NOTICE**
**When changing the DEF, place (leave) the starter switch to the "ON" position.**

**NO**

**Go to step 3.**

| 3 | Inspect the exhaust gas leakage |
|---|---|

1. Check the exhaust gas flow downstream of the turbocharger and confirm that there is no leakage of exhaust gas.

**Was any failure found?**

**YES**

**Repair or replace the area where the leak is. Perform "After-inspection work" of INFORMATION section.**

**NO**

**Go to step 4.**

| 4 | Inspect the NOx sensor No.1 (SCR upstream) [HINO DX II ] |
|---|---|

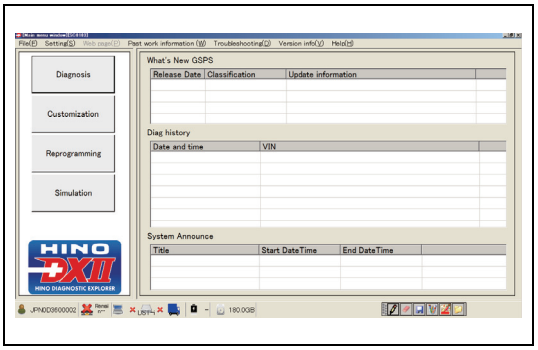


SAPH16F010301032

1. Turn the starter key to the "ON" position.

2. Start DX II .

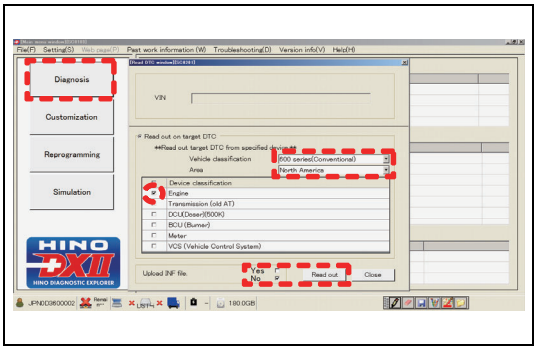


SAPH16F010301033

3. On the DX II window, click [Diagnosis].
Select the vehicle model and region, and check [Engine].
Select either Upload INF file and then [Read out] to read out.

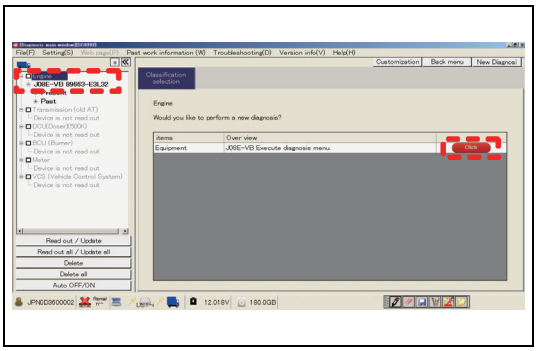


SAPH16F010301034

4. Select [Engine], and press the click button.

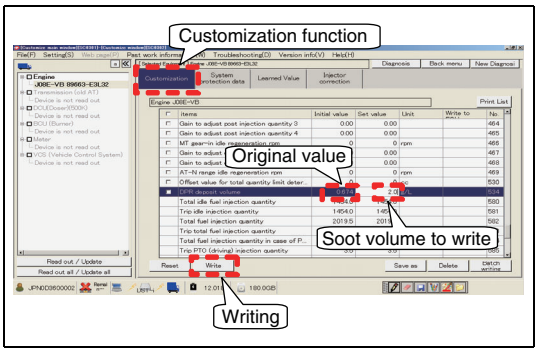


SAPH16F010301035

5. Writing soot volume

**HINT**

**As in the window on the left, write a soot volume [2.0] using the customization function. Record the original value not to forget. The example in the window is [0.674].**

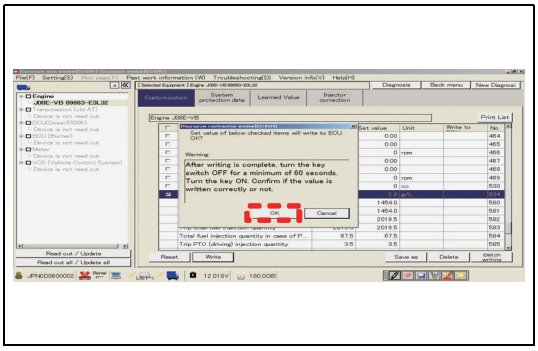

SAPH16F010301036

6. Turn the starter key "OFF" and then "ON" according to the instruction.
Then, click [OK].

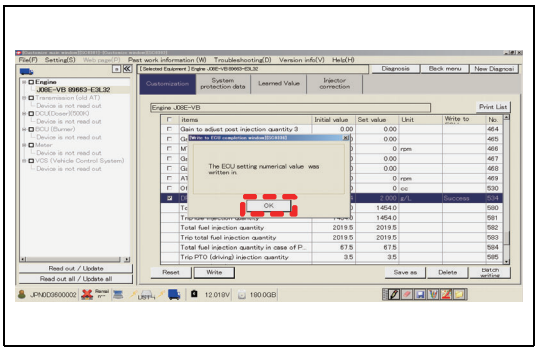

SAPH16F010301037

7. Check that ECU writing has been completed. Click [OK].
Refer to the window on the left.

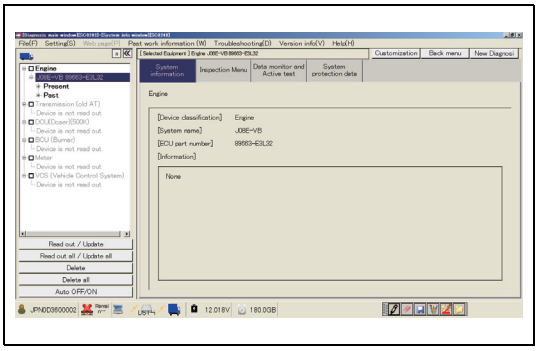

SAPH16F010301038

8. Start monitoring using the data monitoring function of DX II .
Check the output waveform of the NOx sensor on the monitor.

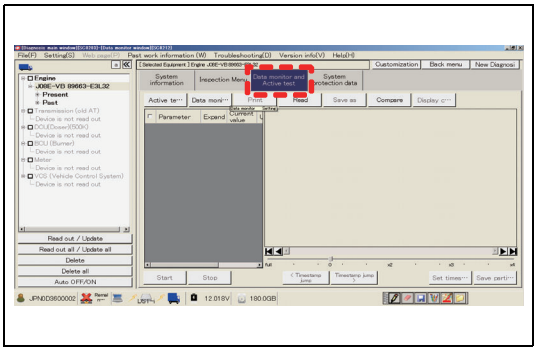

SAPH16F010301039

9. Select [Data monitor and Active test].

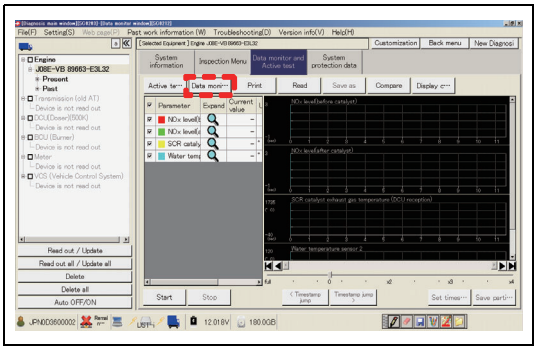

SAPH16F010301040

10. Select [Data monitor Setting].
Refer to the window on the left.

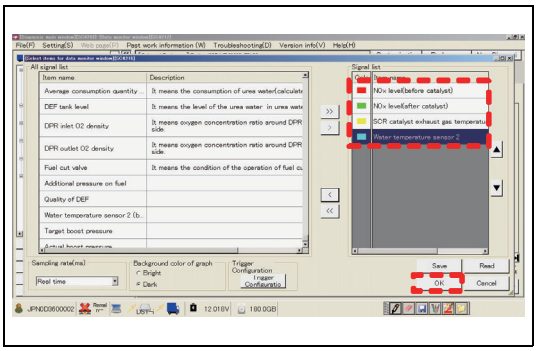

SAPH16F010301041

11. From the selection window on the left, select the following 4 items. Click OK.

- NOx level (before catalyst)
- NOx level (after catalyst)
- SCR catalyst exhaust gas temperature (DCU reception)
- Water temperature sensor 2

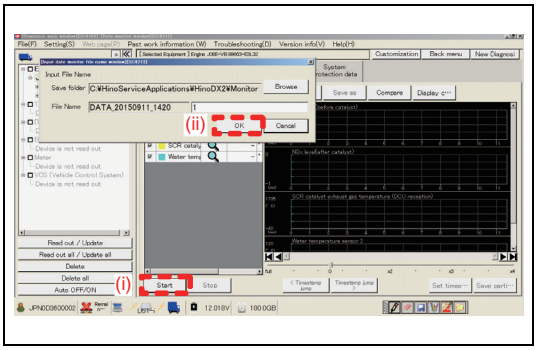

SAPH16F010301042

12. (i) Click [Start] to display the window to check the data storage destination.
(ii) Click [OK] to start data monitoring.

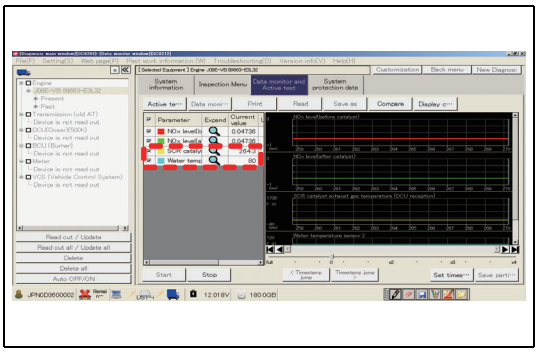

SAPH16F010301043

13. Start the engine.

14. Press the DPR manual regeneration switch of the vehicle.
    Start regeneration.

**HINT**

**Since NOx sensor waveform is not detected until the exhaust gas temperature and coolant temperature reach the specified values or more, perform DPR regeneration to increase the exhaust gas temperature and coolant temperature.**

15. On the DX II data monitor, monitor the SCR catalyst temperature, coolant temperature and NOx levels before and after.

16. When the SCR catalyst temperature reaches 250 °C {482 °F} and coolant temperature reaches 70 °C {158 °F}, press the DPR switch (button) to stop the regeneration.

17. Following the determination manual, determine the quality of the sensor according to the NOx sensor waveform data on the monitor.
    This is the end of the trouble shooting.

18. Turn the starter key OFF once to stop the engine. Turn it ON again.
19. After completing the trouble shooting, rewrite the soot volume to the original value.
    Select [Engine] as in the window on the left. Click the [Click] button.

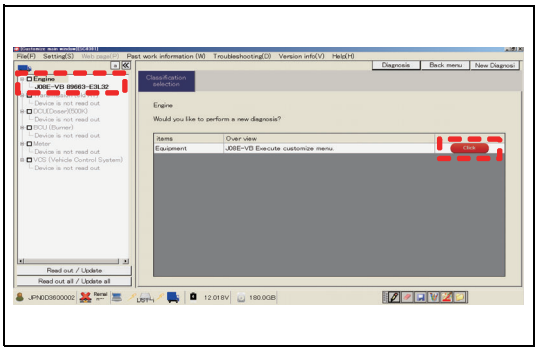

SAPH16F010301044

20. Rewrite the soot volume to the recorded original value.
    Refer to the window on the left.
    For the case of this window, the soot volume to write is [0.6].

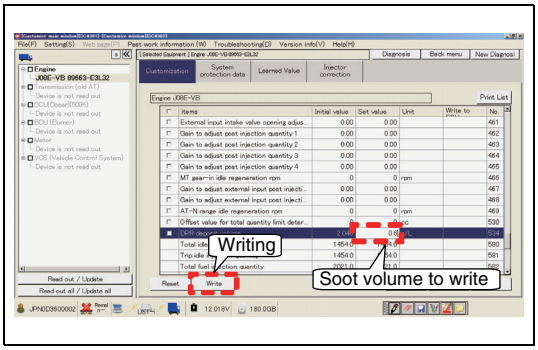


SAPH16F010301045

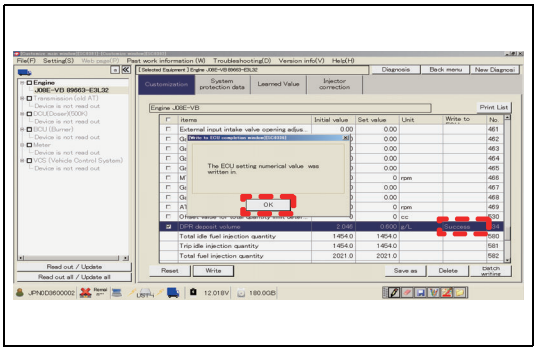

SAPH16F010301046

21. Check that the original soot volume has been written, and click [OK].
Refer to the window on the left.

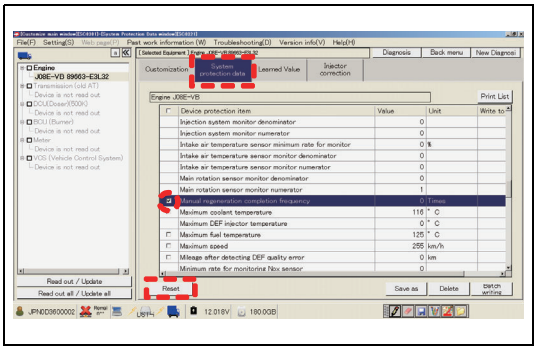

SAPH16F010301047

22. Select [System protection data] to check [Manual regeneration completion frequency]. Click [Reset]. Refer to the window on the left.

**NOTICE**

**Unless this memory reset is performed, the DTC of abnormal regeneration frequency would turn on.**

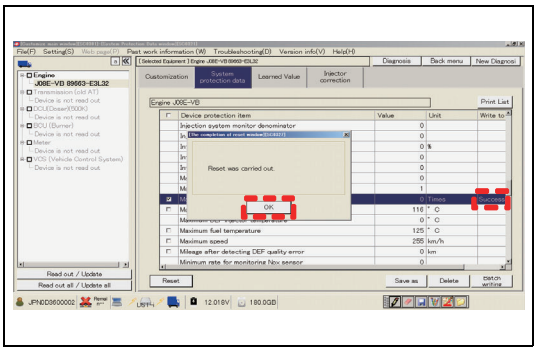

SAPH16F010301048

23. Check that the memory reset has been completed. Click [OK].
Refer to the window on the left.

**Was any failure found?**

**YES**

**Replace the NOx sensor 1 (SCR upstream) Perform "After-inspection work" of INFORMATION section.**

**NO**

**Go to step 5.**

| 5 | Inspect the NOx sensor No.2 (SCR downstream) [HINO DX II ] |
|---|---|

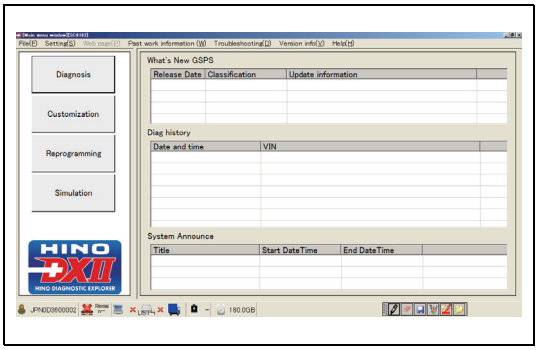


SAPH16F010301049

1. Turn the starter key to the "ON" position.

2. Start DX II .

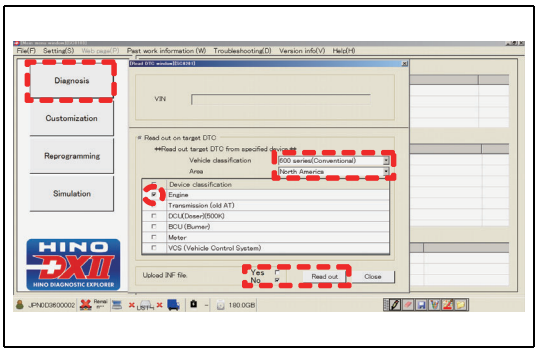


SAPH16F010301050

3. On the DX II window, click [Diagnosis].
   Select the vehicle model and region, and check [Engine].
   Select either Upload INF file and then [Read out] to read out.

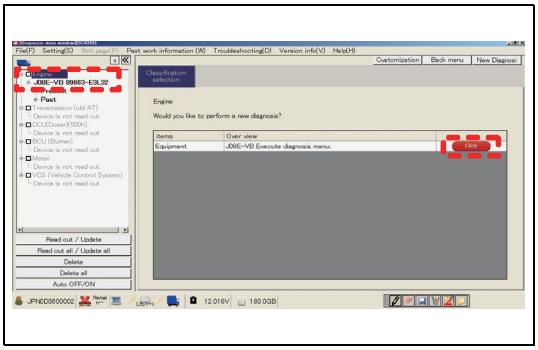


SAPH16F010301051

4. Select [Engine], and press the click button.

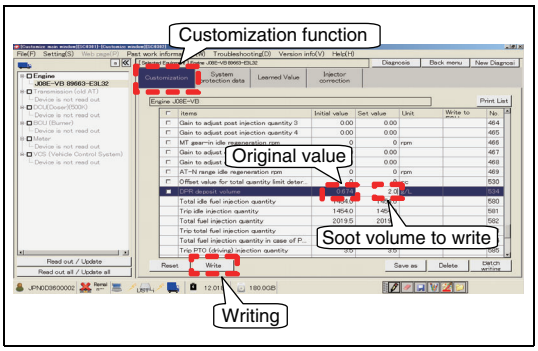


SAPH16F010301052

5. Writing soot volume

**HINT**

**As in the window on the left, write a soot volume [2.0] using the customization function. Record the original value not to forget. The example in the window is [0.674].**

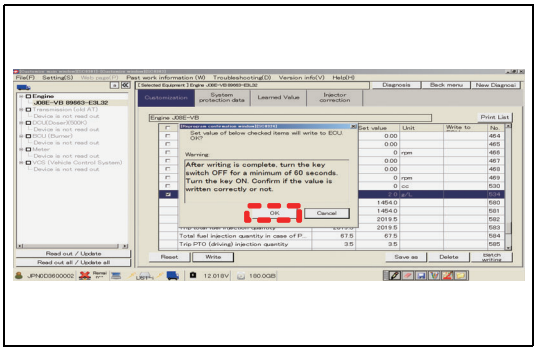


SAPH16F010301053

6. Turn the starter key "OFF" and then "ON" according to the instruction.
Then, click [OK].

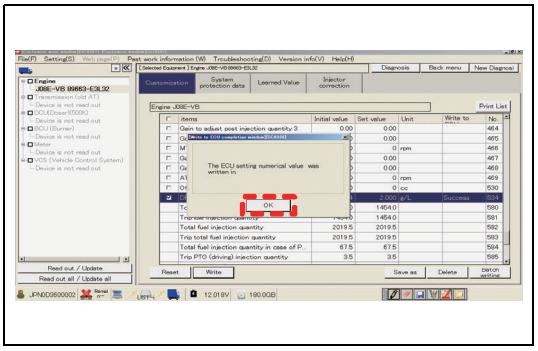


SAPH16F010301054

7. Check that ECU writing has been completed. Click [OK].
Refer to the window on the left.

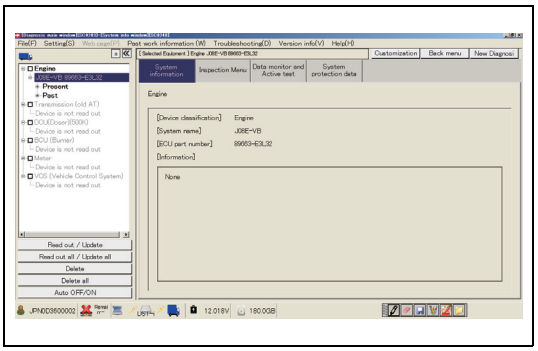

SAPH16F010301055

8. Start monitoring using the data monitoring function of DX II .
Check the output waveform of the NOx sensor on the monitor.

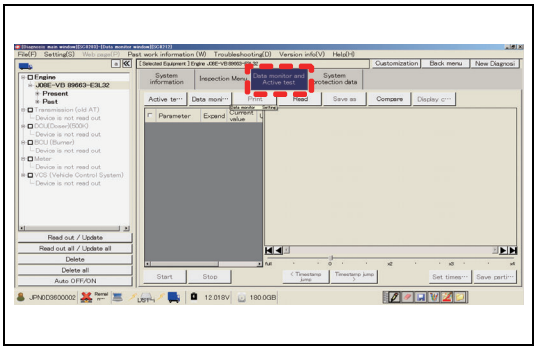

SAPH16F010301056

9. Select [Data monitor and Active test].

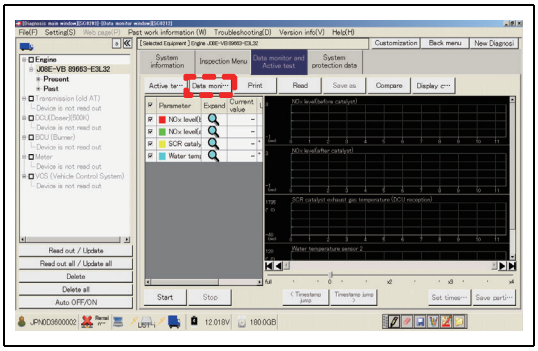

SAPH16F010301057

10. Select [Data monitor Setting].
Refer to the window on the left.

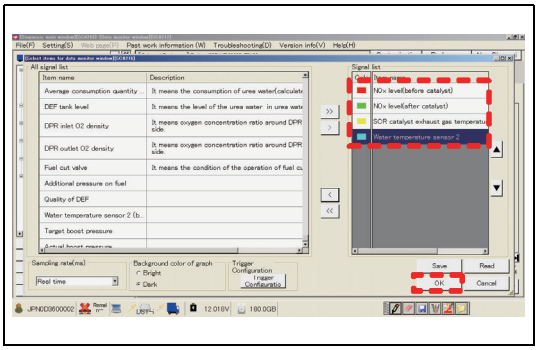

SAPH16F010301058

11. From the selection window on the left, select the following 4 items.
Click OK.

- NOx level (before catalyst)
- NOx level (after catalyst)
- SCR catalyst exhaust gas temperature (DCU reception)
- Water temperature sensor 2

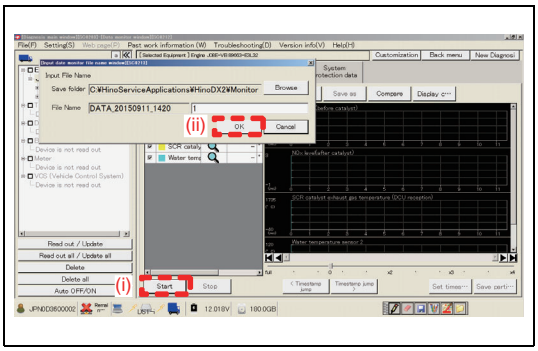


SAPH16F010301059

12. (i) Click [Start] to display the window to check the data storage destination.
(ii) Click [OK] to start data monitoring.

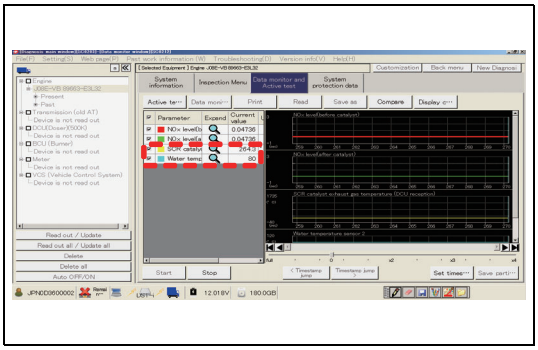

SAPH16F010301060

13. Start the engine.

14. Press the DPR manual regeneration switch of the vehicle.
Start regeneration.

**HINT**

**Since NOx sensor waveform is not detected until the exhaust gas temperature and coolant temperature reach the specified values or more, perform DPR regeneration to increase the exhaust gas temperature and coolant temperature.**

15. On the DX II data monitor, monitor the SCR catalyst temperature, coolant temperature and NOx levels before and after.

16. When the SCR catalyst temperature reaches 250 °C {482 °F} and coolant temperature reaches 70 °C {158 °F}, press the DPR switch (button) to stop the regeneration.

17. Following the determination manual, determine the quality of the sensor according to the NOx sensor waveform data on the monitor.
This is the end of the trouble shooting.

18. Turn the starter key OFF once to stop the engine. Turn it ON again.
19. After completing the trouble shooting, rewrite the soot volume to the original value.
    Select [Engine] as in the window on the left. Click the [Click] button.

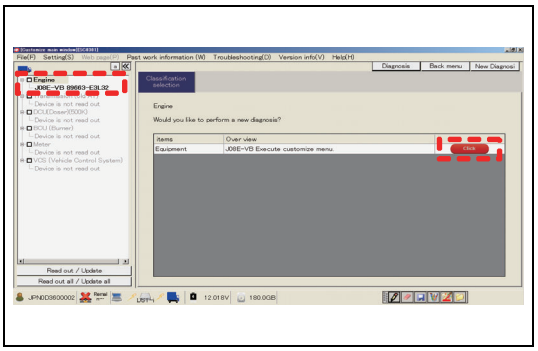

SAPH16F010301061

20. Rewrite the soot volume to the recorded original value.
    Refer to the window on the left.
    For the case of this window, the soot volume to write is [0.6].

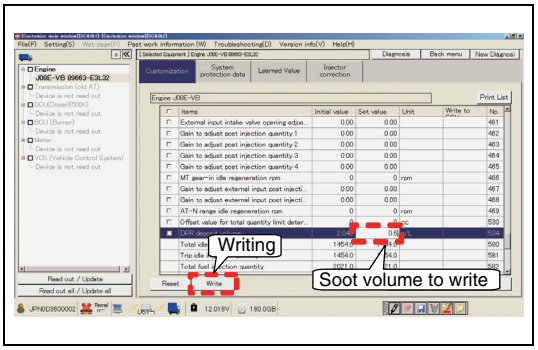


SAPH16F010301062

21. Check that the original soot volume has been written, and click [OK].
    Refer to the window on the left.

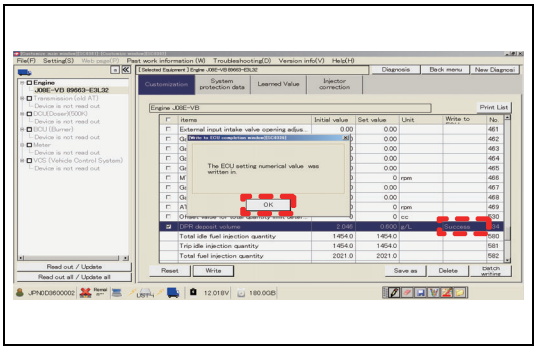

SAPH16F010301063

22. Select [System protection data] to check [Manual regeneration completion frequency]. Click [Reset]. Refer to the window on the left.

**NOTICE**

**Unless this memory reset is performed, the DTC of abnormal regeneration frequency would turn on.**

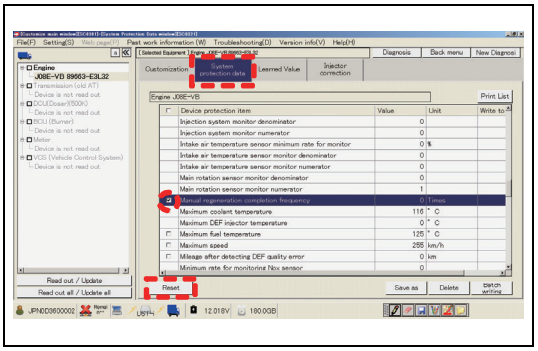

SAPH16F010301064

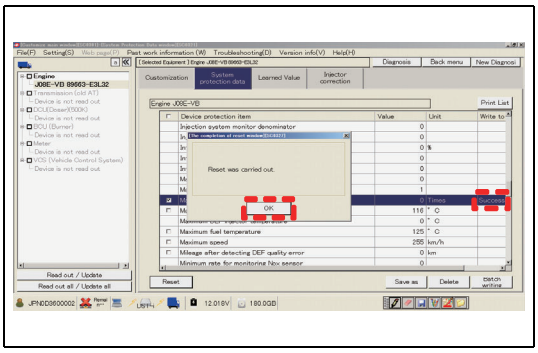


SAPH16F010301065

23. Check that the memory reset has been completed. Click [OK]. Refer to the window on the left.

**Was any failure found?**

**YES**

**Replace the NOx sensor 2 (SCR downstream) Perform "After-inspection work" of INFORMATION section.**

**NO**

**Go to step 6.**

## 6 Inspect the exhaust gas temperature sensor 4 (DPR inlet) connector

1. Check the connection of the exhaust gas temperature sensor 4 (DPR inlet) connector (Looseness and poor contact).

**Was any failure found?**

**YES**

**Connect securely, repair if needed.**
**Go to step 7.**

**NO**

**Go to step 7.**

## 7 Inspect the exhaust gas temperature sensor 4 (DPR inlet)

1. Check the installation of the exhaust gas temperature sensor 4 (DPR inlet).
2. Make sure there is no dirt or damage to the exhaust gas temperature sensor 4 (DPR inlet).

**Was any failure found?**

**YES**

**Clean the exhaust gas temperature sensor 4 (DPR inlet) and install it properly.**
**If damaged, replace the exhaust gas temperature sensor 4 (DPR inlet).**
**Go to step 8.**

**NO**

**Go to step 8.**

## 8 Inspect the exhaust gas temperature sensor 4 (DPR inlet) unit

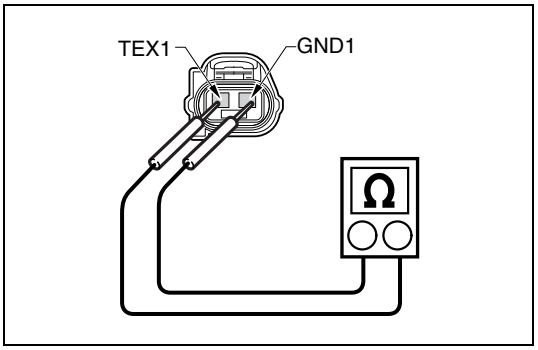


SAPH16F010301066

1. Set the starter switch to the "LOCK" position.
2. Disconnect the exhaust gas temperature sensor 4 (DPR inlet) connector.
3. Use the electrical tester to measure the resistance between the terminals of the exhaust gas temperature sensor 4 (DPR inlet).

| Measurement conditions | Tester connections | Standard values |
|---|---|---|
| **Starter switch: LOCK** | **Exhaust gas temperature sensor 4 (DPR inlet) TEX1 – GND1** | **20 °C {68 °F}: 13.7 – 29.8 kΩ 50 °C {122 °F}: 7.13 – 13.7 kΩ 80 °C {176 °F}: 4.1 – 7.13 kΩ** |

**Do the measurements meet the standard value?**

**YES**

**Go to step 9.**

**NO**

**Replace the exhaust gas temperature sensor 4 (DPR inlet).**
**Go to step 9.**

## 9 Inspect the sensor power supply

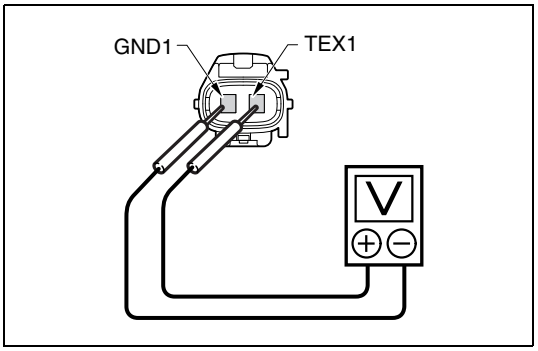


SAPH16F010301067

1. Set the starter switch to the "ON" position.
2. Use the electrical tester to measure the voltage between the terminals of the exhaust gas temperature sensor 4 (DPR inlet) vehicle-side connector.

| Measurement conditions | Tester connections | Standard values |
|---|---|---|
| **Starter switch: ON** | **Exhaust gas temperature sensor 4 (DPR inlet) vehicle-side connector TEX1 – GND1** | **4.5 – 5.5 V** |

**Do the measurements meet the standard value?**

YES

**Go to step 12.**
**If any failure was found at the step 6 - 8, perform "After-inspection work" of INFORMATION section.**

NO

**Go to step 10.**

## 10 Inspect for short-circuit of the exhaust gas temperature sensor 4 (DPR inlet) harness

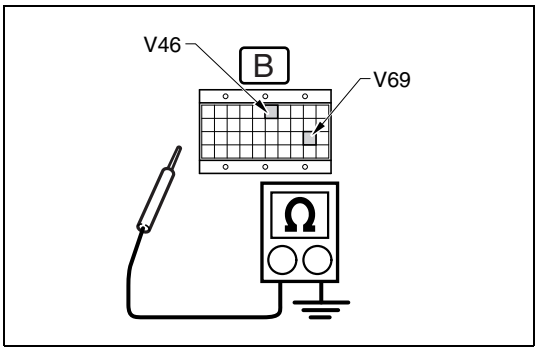


SAPH16F010301068

1. Set the starter switch to the "LOCK" position.
2. Connect the signal check harness to the engine ECU. (Do not connect harness to the ECU.)
3. Use the electrical tester to measure the resistance between the terminals of the engine ECU (signal check harness) and ground.

| Measurement conditions | Tester connections | Standard values |
|---|---|---|
| **Starter switch: LOCK** | **Engine ECU (signal check harness) AGD3(V46) – Ground ET3+(V69) – Ground** | ∞ Ω |

**Do the measurements meet the standard value?**

YES

**Go to step 11**

NO

**Repair or replace the harness.**
**Go to step 11.**

| 11 | Inspect disconnection of the exhaust gas temperature sensor 4 (DPR inlet) harness |
|---|---|

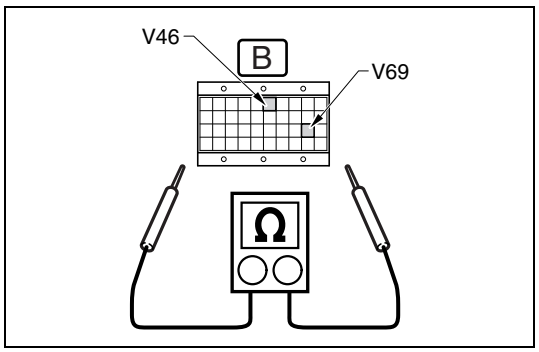

SAPH16F010301069

1. Connect the exhaust gas temperature sensor 4 (DPR inlet) connector.
2. Use the electrical tester to measure the resistance between the terminals of the engine ECU (signal check harness).

| Measurement conditions | Tester connections | Tester connections |
|---|---|---|
| **Starter switch: LOCK** | **Engine ECU (signal check harness) AGD3(V46) – ET3+(V69)** | **20 °C {68 °F}: 13.7 – 29.8 kΩ<br>50 °C {122 °F}: 7.13 – 13.7 kΩ<br>80 °C {176 °F}: 4.1 – 7.13 kΩ** |

**Do the measurements meet the standard value?**

**YES**

**Go to step 12.**
**If any failure was found at the step 6 - 10, perform "After-inspection work" of INFORMATION section.**

**NO**

**Repair or replace the harness.**
**Perform "After-inspection work" of INFORMATION section.**

| 12 | Inspect the exhaust gas temperature sensor (SCR inlet) connector |
|---|---|

1. Check the connection of the exhaust gas temperature sensor (SCR inlet) connector (Looseness and poor contact).

**Was any failure found?**

**YES**

**Connect securely, repair if needed.**
**Go to step 13.**

**NO**

**Go to step 13.**

| 13 | Inspect the exhaust gas temperature sensor (SCR inlet) |
|---|---|

1. Check the installation of the exhaust gas temperature sensor (SCR inlet).
2. Make sure there is no dirt or damage to the exhaust gas temperature sensor (SCR inlet).

**Was any failure found?**

**YES**

**Clean the exhaust gas temperature sensor (SCR inlet) and install it properly. If damaged, replace the exhaust gas temperature sensor (SCR inlet).**
**Go to step 14.**

**NO**

**Go to step 14.**

| 14 | **Inspect the exhaust gas temperature sensor (SCR inlet) unit** |
|---|---|

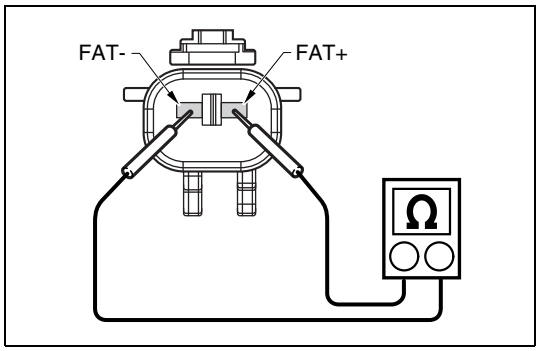


SAPH16F010301070

1. Set the starter switch to the "LOCK" position.
2. Disconnect the exhaust gas temperature sensor (SCR inlet) connector.
3. Use the electrical tester to measure the resistance between the terminals of the exhaust gas temperature sensor (SCR inlet).

| Measurement conditions | Tester connections | Standard values |
|---|---|---|
| **Starter switch: LOCK** | **Exhaust gas temperature sensor (SCR inlet) FAT+ – FAT-** | **20 °C {68 °F}: 220 Ω** |

**Do the measurements meet the standard value?**

**YES**

**Go to step 15.**

**NO**

**Replace the exhaust gas temperature sensor (SCR inlet).**
**Go to step 15.**

| 15 | Inspect for short-circuit in the exhaust gas temperature sensor (SCR inlet) harness |
|---|---|

1. Disconnect the DCU 86P connector.
2. Connect the signal check harness and use the electrical tester to measure the resistance between the terminals of the DCU 86P vehicle-side connector and the ground.

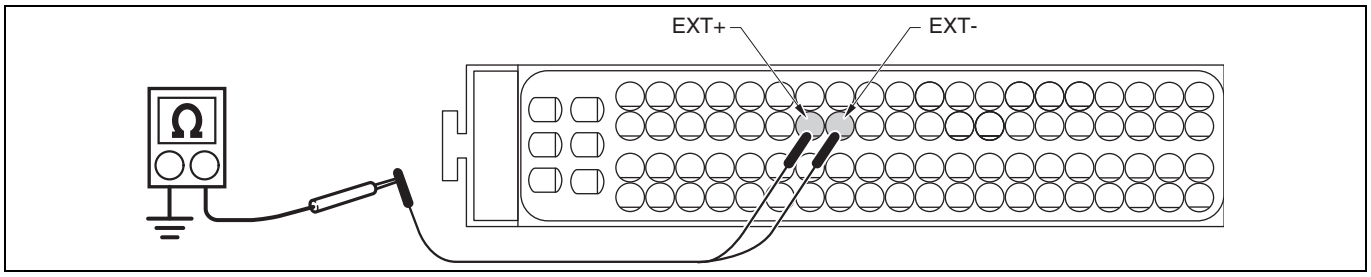


SAPH16F010301071

| Measurement conditions | Tester connections | Standard values |
|---|---|---|
| **Starter switch: LOCK** | **DCU 86P vehicle-side connector EXT+ – Ground EXT- – Ground** | ∞ Ω |

**Do the measurements meet the standard value?**

**YES**

**Go to step 16.**

**NO**

**Repair or replace the harness.**
**Go to step 16.**

| 16 | Inspect disconnection of the exhaust gas temperature sensor (SCR inlet) harness |
|---|---|

1. Connect the exhaust gas temperature sensor (SCR inlet) connector.
2. Connect the signal check harness and use the electrical tester to measure the resistance between the terminals of the DCU 86P vehicle-side connector.

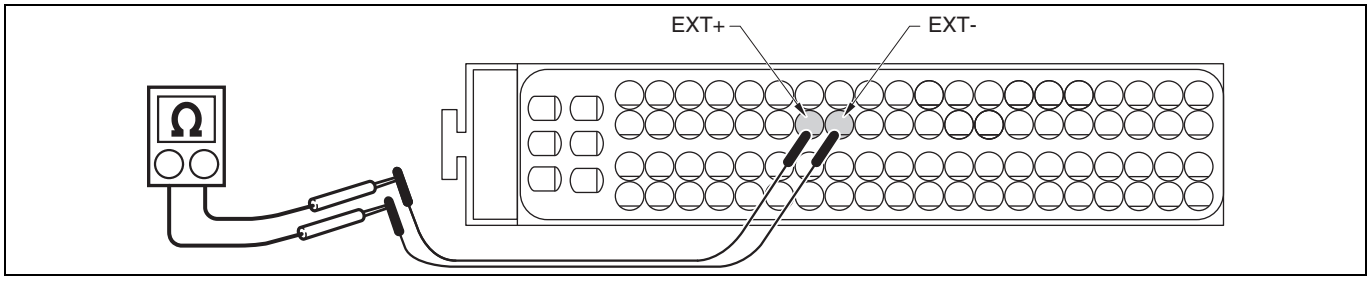


SAPH16F010301072

| Measurement conditions | Tester connections | Standard values |
|---|---|---|
| Starter switch: LOCK | DCU 86P vehicle-side connector EXT+ – EXT- | 20 °C {68 °F}: 220 Ω |

**Do the measurements meet the standard value?**

**YES**

**Go to step 17.**
**If any failure was found at the step 12 - 15, perform "After-inspection work" of INFORMATION section.**

**NO**

**Repair or replace the harness.**
**Perform "After-inspection work" of INFORMATION section.**

| 17 | Inspect the DEF injector [HINO DX II ] |
|---|---|

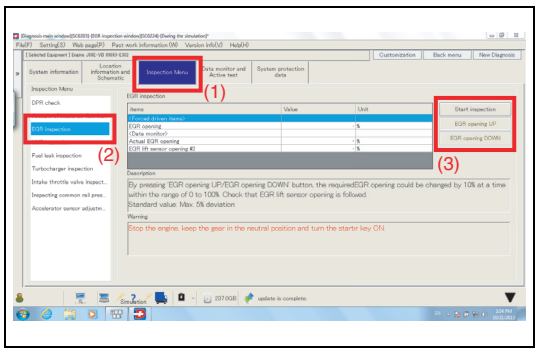


SAPH16F010301073

**NOTICE**
**Prepare a beaker or similar, plus a larger measuring vessel for measuring the DEF to be injected, before perform this inspection. (If the vessel is small, there is dispersion at the time of injection from the injector, and the measuring quantity decreases.)**

1. Set the starter switch to the "LOCK" position.
2. Remove the DEF injector from muffler.
3. Connect the vehicle to HINO DX II .
4. Set the starter switch to the "ON" position.
5. Select [DCU].
6. Select [Inspection Menu] and check the DEF injector actuation.
   <Inspection procedure>
   (1) Select [Inspection Menu].
   (2) Select [DEF solution addition test].
   (3) Perform additional tests as instructed on the HINO DX II screen. (Perform test patterns 1 – 3 and check the injection amount and spray condition.)

**Is operation normal?**

**YES**

**Go to step 18.**

**NO**

**Replace the DEF injector.**
**Perform "After-inspection work" of INFORMATION section.**

| 18 | Check the response delay of the EGR valve [HINO DX II ] |
|---|---|

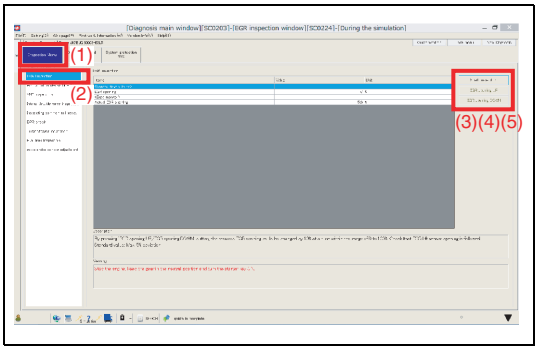


SAPH16F010301074

1. Select [Engine] on the screen of HINO DX II .

2. Check the time lag (following characteristics) of the target EGR valve opening and actual EGR valve opening by following procedure.

**⚠ CAUTION**
**Perform the inspection while the engine is stopped to avoid engine damages.**

<Inspection procedure>
(1) Select [Inspection Menu].
(2) Select [EGR inspection].
(3) Click [Start inspection].
(4) Click [EGR opening UP]:

- Check each step from 0 % – 90 % of the time lag (following characteristics) of the target EGR valve opening and actual EGR valve opening.
  (5) Click [EGR opening DOWN]:
- Check each step from 90 % – 0 % of the time lag (following characteristics) of the target EGR valve opening and actual EGR valve opening.

**HINT**
**In EGR openings from 0 % – 90 %, 1 step corresponds to a 10 % change.**

| Standard values |
|---|
| The response delay should be less than 5 seconds. |

**Do the measurements meet the standard value?**

**YES**

**Go to step 19.**

**NO**

**Replace the EGR valve.**
**Perform "After-inspection work" of INFORMATION section.**

| 19 | Inspect the EGR valve [HINO DX II ] |
|---|---|

1. Set the starter switch to the "LOCK" position.

2. Remove the EGR valve.

3. Set the starter switch to ON position and select [Engine] on the screen of HINO DX II .

4. Perform [EGR inspection] in the same way as step 18.
   Confirm the tracking properties of the EGR valve and make sure it closes tightly.

**Are tracking and tightness normal?**

YES

**Go to step 20.**

NO

**Replace the EGR valve.**
**Perform "After-inspection work" of INFORMATION section.**

| 20 | **Inspect the EGR cooler** |
|---|---|

1. Check the condition of the tube coming out of the outlet side of the EGR cooler.
2. Check if the EGR cooler tube is clogged.

**Is the tube clogged?**

YES

**Wash or replace the EGR cooler.**
**Perform "After-inspection work" of INFORMATION section.**

NO

**Go to step 21.**

| 21 | **Inspect the air flow sensor connector** |
|---|---|

1. Check the connection of the air flow sensor (Looseness and poor contact).

**Was any failure found?**

YES

**Connect securely, repair if needed.**
**Go to step 22.**

NO

**Go to step 22.**

| 22 | Inspect the air flow sensor |
|---|---|

1. Check the installation of the air flow sensor.
2. Make sure there is no dirt or damage to the air flow sensor.

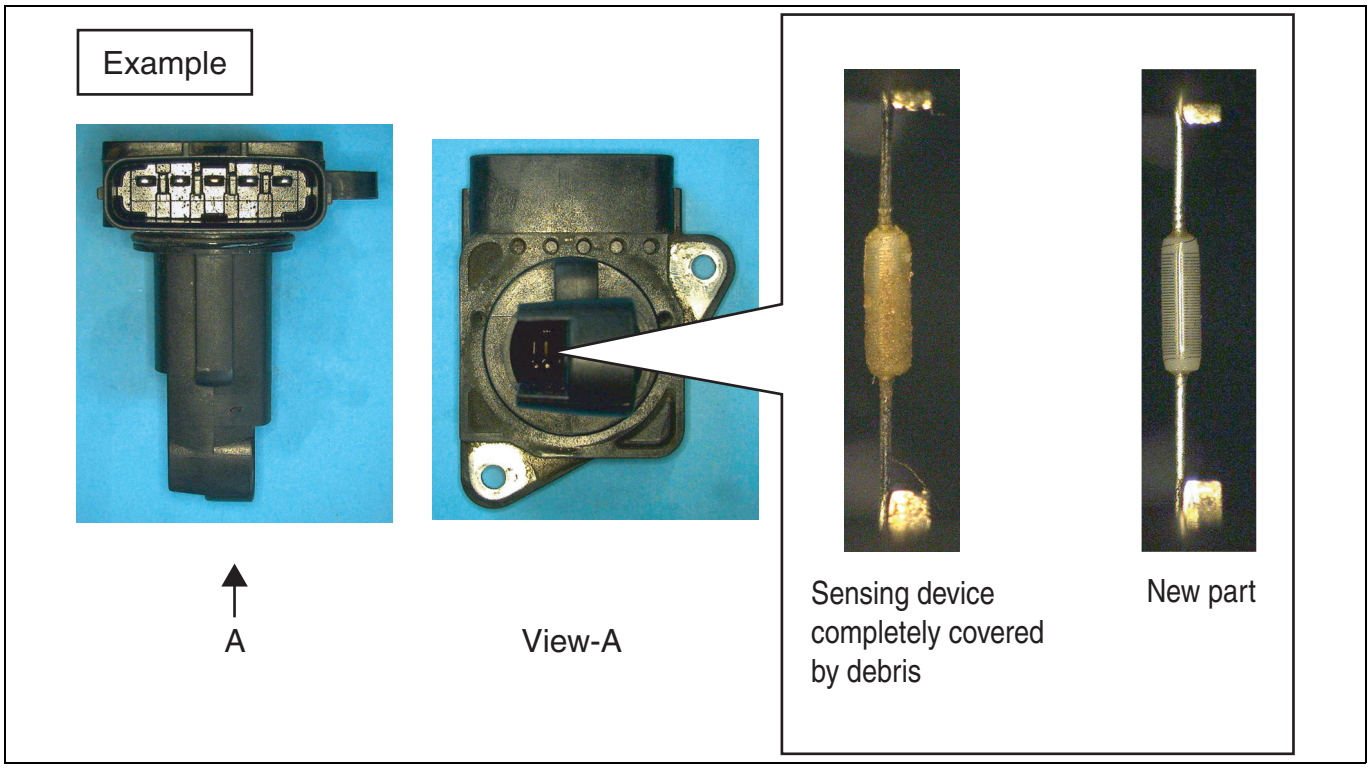


SAPH16F010301075

**Was any failure found?**

**YES**

**Go to step 23.**

**NO**

**Go to step 24.**

| 23 | Inspect air flow sensor [HINO DX ll ] |
|---|---|

Prepare the new air flow sensor, and compare the air flow sensor characteristics between the sensor on the vehicle and new sensor by using HINO DX II .

1. Set the starter switch to the lock position and connect HINO DX II to the vehicle.
2. Reconnect the sensor to the vehicle.
3. Set the starter switch to ON position and select [Engine] on HINO DX II menu.
4. Select [Amount of intake air flow inspection] from [Inspection Menu] on HINO DX II .
5. Perform [Amount of intake air flow inspection] as instructed on the HINO DX II screen.
6. Perform the same inspection with the new sensor, and compare the characteristics between old and new.

| Standard values |
|---|
| **Performance error: less than 10 %** |

**Do the measurements meet the standard value?**

**YES**

**Go to step 24.**

**NO**

**Install the new air flow sensor.**
**Go to step 24.**

| 24 | Inspect for short-circuits in wire harness of air flow sensor |
|---|---|

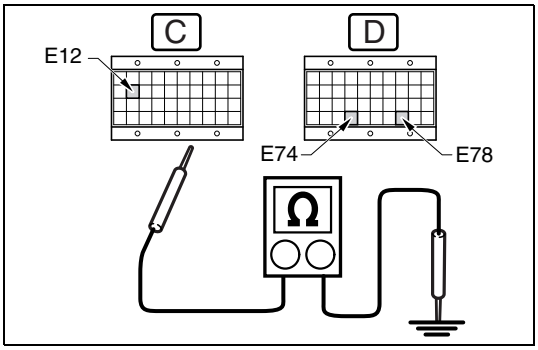

SAPH16F010301076

1. Set the starter switch to the "LOCK" position.
2. Disconnect the air flow sensor connector.
3. Connect the signal check harness to the engine ECU vehicle-side harness. (Do not connect harness to the ECU.)
4. Use the electrical tester to measure the resistance between the engine ECU (signal check harness) terminals and ground.

**HINT**
**Measure while shaking the harness.**

| Measurement conditions | Tester connections | Standard values |
|---|---|---|
| **Starter switch: LOCK** | **Engine ECU (signal check harness) AFVB(E12) – Ground AFSI(E74) – Ground AG4(E78) – Ground** | **∞ Ω** |

**Do the measurements meet the standard value?**

**YES**

**Go to step 25.**

**NO**

**Repair or replace the harness.**
**Go to step 25.**

| 25 | Inspect for disconnection in wire harness of air flow sensor |
|---|---|

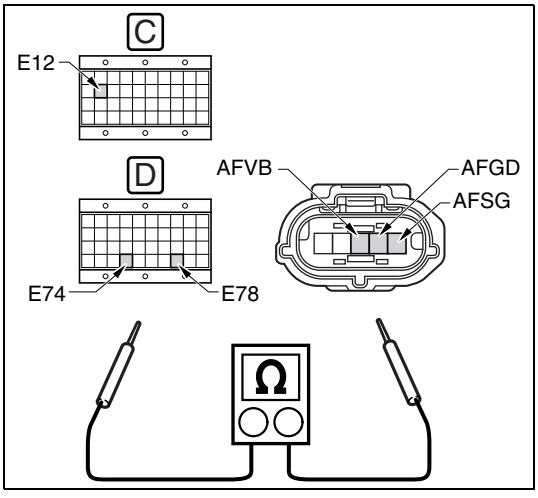

SAPH16F010301077

1. Use the electrical tester to measure the resistance between the engine ECU (signal check harness) terminal and the air flow sensor vehicle-side connector terminal.

**HINT**
**Measure while shaking the harness.**

| Measurement conditions | Tester connections | Standard values |
|---|---|---|
| **Starter switch: LOCK** | **Engine ECU (signal check harness) – air flow sensor vehicle-side connector AFVB(E12) – AFVB AFSI(E74) – AFSG AG4(E78) – AFGD** | **1 Ω or less** |

**Do the measurements meet the standard value?**

| YES | NO |
|---|---|
| **Go to step 26.** | **Repair or replace the harness.<br>Go to step 26.** |

| 26 | Inspect the air flow sensor [HINO DX II ] |
|---|---|

Prepare the new air flow sensor, and compare the air flow sensor characteristics between the sensor on the vehicle and new sensor by using HINO DX II .

1. Set the starter switch to the "LOCK" position and connect HINO DX II to the vehicle.
2. Set the starter switch to "ON" position and select [Engine] on HINO DX II menu.
3. Select [Amount of intake air flow inspection] from [Inspection Menu] on HINO DX II menu.
4. Select [Amount of intake air flow inspection] from [Inspection Menu] on HINO DX II menu.
5. Perform the same inspection with the new sensor, and compare the characteristics between old and new.

| Standard values |
|---|
| **Performance error: less than 10%** |

**Do the measurements meet the standard value?**

| YES | NO |
|---|---|
| **Go to step 27.<br>If any failure was found at the step 21 - 25, perform "After-inspection work" of INFORMATION section.** | **Replace the air flow sensor.<br>Perform "After-inspection work" of INFORMATION section.** |

| 27 | Inspect the boost pressure sensor connector |
|---|---|

1. Check the connection of the boost pressure sensor connector (Looseness and poor contact).

**Was any failure found?**

YES

**Connect securely, repair if needed.**
**Go to step 28.**

NO

**Go to step 28.**

## 28 Inspect the boost pressure sensor

1. Check the installation of the boost pressure sensor.
2. Make sure there is no dirt or damage to the boost pressure sensor.
3. Make sure there is no dirt, damage or clogging in the pipes or hoses unit of the boost pressure sensor.

**Was any failure found?**

YES

**If dirt, clogging or damage was found in sensing unit, replace the boost pressure sensor.**
**Go to step 29.**

NO

**Go to step 29.**

## 29 Check the boost pressure sensor output signal [HINO DX II ]

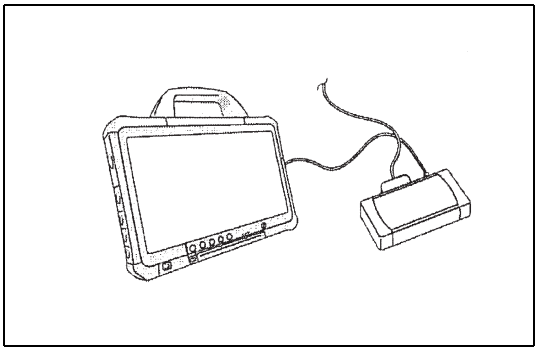

SAPH16F010301078

1. Set the starter switch to the "LOCK" position.
2. Connect the vehicle to HINO DX II .
3. Start the engine.
4. Select [Engine] from the menu.
5. Select [Actual boost pressure] from the [Data monitor Setting] menu.
6. Race the engine from idle to NMR and verify that the boost pressure output signal varies.

| Standard values |
|---|
| **There is no abnormal change in the sensor output signal. (The pressure sensor signal response changes according to the engine speed)** |

**Was there no abnormal change in the sensor output signal?**

YES

**Go to step 33.**
**If any failure was found at the step 27, 28, perform "After-inspection work" of INFORMATION section.**

NO

**Replace the boost pressure sensor.**
**Perform "After-inspection work" of INFORMATION section.**
**Go to step 30.**

## 30 Inspect for short-circuits in wire harness of boost pressure sensor

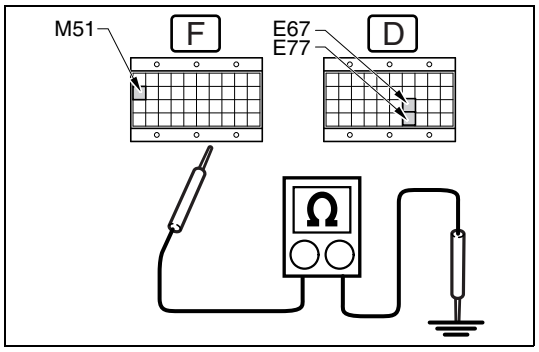

SAPH16F010301079

1. Set the starter switch to the "LOCK" position.
2. Disconnect the boost pressure sensor connector.
3. Connect the signal check harness to the engine ECU vehicle-side harness. (Do not connect harness to the ECU.)
4. Use the electrical tester to measure the resistance between each terminal in the engine ECU (signal check harness) and ground.

| Measurement conditions | Tester connections | Standard values |
|---|---|---|
| Starter switch: LOCK | Engine ECU (signal check harness) AV3(M51) – Ground<br>PIM(E67) – Ground<br>AG3(E77) – Ground | ∞ Ω |

**Do the measurements meet the standard value?**

YES

**Go to step 31.**

NO

**Repair or replace the harness.**
**Go to step 31.**

## 31 Inspect for disconnection in wire harness of boost pressure sensor

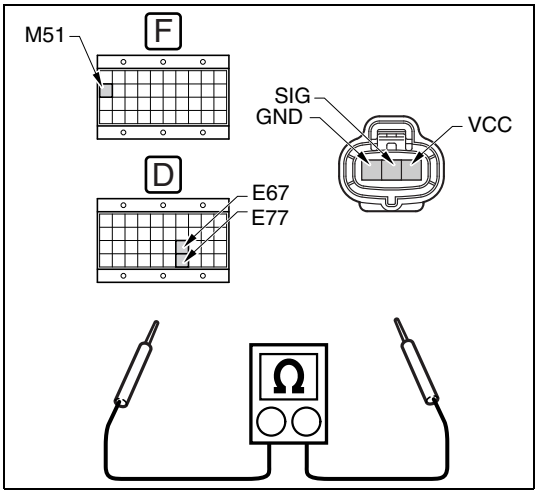

SAPH16F010301080

1. Use the electrical tester to measure the resistance between the engine ECU (signal check harness) and boost pressure sensor vehicle-side connector terminals.

| Measurement conditions | Tester connections | Standard values |
|---|---|---|
| Starter switch: LOCK | Engine ECU (signal check harness) – boost pressure sensor vehicle-side connector AV3(M51) – VCC PIM(E67) – SIG AG3(E77) – GND | 1 Ω |

**Do the measurements meet the standard value?**

**YES**

**Go to step 32.**

**NO**

**Repair or replace the harness.**
**Go to step 32.**

## 32 Inspect the boost pressure sensor power supply

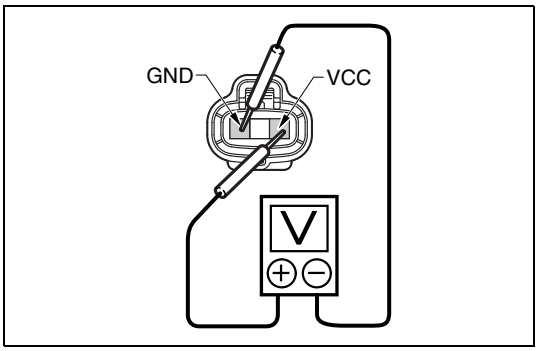

SAPH16F010301081

1. Connect the engine ECU vehicle-side harness to the engine ECU.
2. Set the starter switch to the "ON" position.
3. Use the electrical tester to measure the voltage between the terminals of the boost pressure sensor vehicle-side connector.

| Measurement conditions | Tester connections | Standard values |
|---|---|---|
| Starter switch: ON | Boost pressure sensor vehicle-side connector VCC – GND | 4.5 – 5.5 V |

**Do the measurements meet the standard value?**

**YES**

**Go to step 33.**
**If any failure was found at the step 27 - 31, perform "After-inspection work" of INFORMATION section.**

**NO**

**Replace the engine ECU.**
**Perform "After-inspection work" of INFORMATION section.**

| 33 | Inspect the intake air temperature sensor (intake manifold) connector |
|---|---|

1. Check the connection of the intake air temperature sensor (intake manifold) connector (Looseness and poor contact).

**Was any failure found?**

| YES | NO |
|---|---|
| **Connect securely, repair if needed. Go to step 34.** | **Go to step 34.** |

| 34 | Inspect the intake air temperature sensor (intake manifold) |
|---|---|

1. Check the installation of the intake air temperature sensor (intake manifold).
2. Make sure there is no dirt or damage to the intake air temperature sensor (intake manifold).

**Was any failure found?**

| YES | NO |
|---|---|
| **Remove all contaminants and clogging. Replace if damaged. Go to step 35.** | **Go to step 35.** |

| 35 | Inspect the intake air temperature sensor (intake manifold) unit |
|---|---|

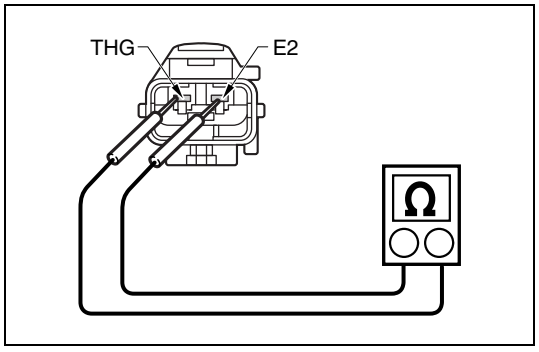

SAPH16F010301082

1. Set the starter switch to the "LOCK" position.
2. Disconnect the intake air temperature sensor (intake manifold) connector.
3. Use the electrical tester to measure the resistance between the terminals of the intake air temperature sensor (intake manifold).

| Measurement conditions | Tester connections | Standard values |
|---|---|---|
| **Starter switch: LOCK** | **Intake air temperature sensor (intake manifold) THG – E2** | **20 °C {68 °F}: 7.336 – 5.794 kΩ 50 °C {122 °F}: 2.435 – 1.994 kΩ** |

**Do the measurements meet the standard value?**

| YES | NO |
|---|---|
| **Go to step 36.** | **Replace the intake air temperature sensor (intake manifold).<br>Go to step 36.** |

| 36 | Inspect the sensor power supply |
|---|---|

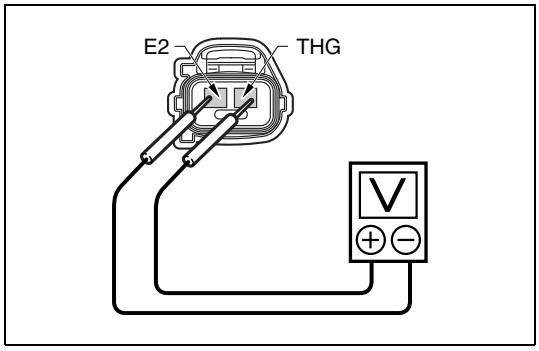

SAPH16F010301083

1. Set the starter switch to the "ON" position.
2. Use the electrical tester to measure the voltage between the terminals of the intake air temperature sensor (intake manifold) vehicle-side connector.

| Measurement conditions | Tester connections | Standard values |
|---|---|---|
| **Starter switch: ON** | **Intake air temperature sensor (intake manifold) vehicle-side connector<br>THG – E2** | **4.5 – 5.5 V** |

**Do the measurements meet the standard value?**

| YES | NO |
|---|---|
| **Go to step 39.<br>If any failure was found at the step 33 - 35, perform "After-inspection work" of INFORMATION section.** | **Go to step 37.** |

| 37 | Inspect for short-circuit of the intake air temperature sensor (intake manifold) harness |
|---|---|

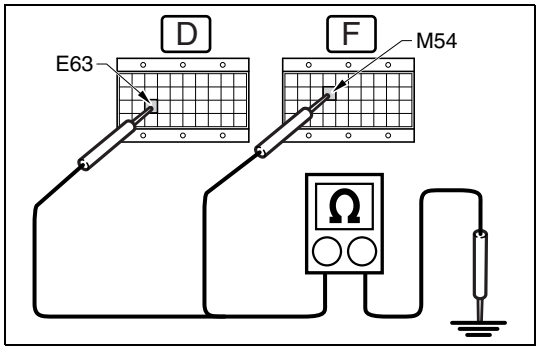

SAPH16F010301084

1. Set the starter switch to the "LOCK" position.
2. Connect the signal check harness to the engine ECU. (Do not connect the harness to the ECU.)
3. Use the electrical tester to measure the resistance between the terminals of the engine ECU (signal check harness) and ground.

| Measurement conditions | Tester connections | Standard values |
|---|---|---|
| **Starter switch: LOCK** | **Engine ECU (signal check harness)<br>ATI+(E63) – Ground<br>AG6(M54) – Ground** | **∞ Ω** |

**Do the measurements meet the standard value?**

| YES | NO |
|---|---|
| **Go to step 38** | **Repair or replace the harness.<br>Go to step 38.** |

## 38 Inspect disconnection of the intake air temperature sensor (intake manifold) harness

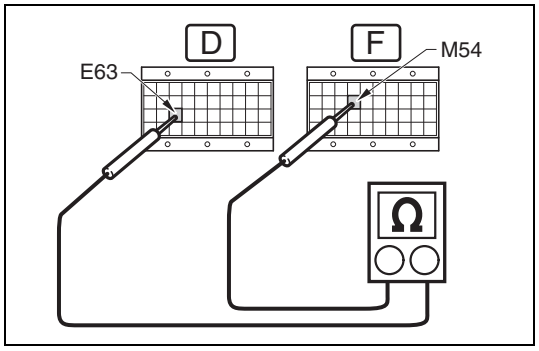

SAPH16F010301085

1. Connect the intake air temperature sensor (intake manifold) connector.
2. Use the electrical tester to measure the resistance between the terminals of the engine ECU (signal check harness).

| Measurement conditions | Tester connections | Standard values |
|---|---|---|
| **Starter switch: LOCK** | **Engine ECU (signal check harness) ATI+(E63) – AG6(M54)** | **20 °C {68 °F}: 7.336 – 5.794 kΩ<br>50 °C {122 °F}: 2.435 – 1.994 kΩ** |

**Do the measurements meet the standard value?**

| YES | NO |
|---|---|
| **Go to step 39.<br>If any failure was found at the step 33 - 37, perform "After-inspection work" of INFORMATION section.** | **Repair or replace the harness.<br>Perform "After-inspection work" of INFORMATION section.** |

## 39 Inspect the engine coolant temperature sensor 1 connector

1. Check the connection of the engine coolant temperature sensor 1 connector (Looseness and poor contact).

**Was any failure found?**

| YES | NO |
|---|---|
| **Connect securely, repair if needed.<br>Go to step 40.** | **Go to step 40.** |

| 40 | Inspect the engine coolant temperature sensor 1 |
|---|---|

1. Check the installation of the engine coolant temperature sensor 1.
2. Make sure there is no dirt or damage to the engine coolant temperature sensor 1.

**Was any failure found?**

**YES**

**Clean the engine coolant temperature sensor 1 and install it properly.**
**If damaged, replace the engine coolant temperature sensor 1.**
**Go to step 41.**

**NO**

**Go to step 41.**

| 41 | Inspect the engine coolant temperature sensor 1 unit |
|---|---|

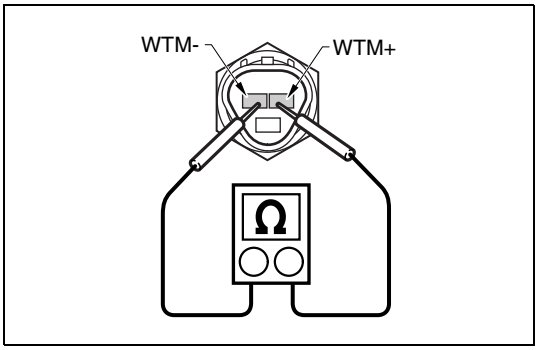


SAPH16F010301086

1. Set the starter switch to the "LOCK" position.
2. Disconnect the engine coolant temperature sensor 1 connector.
3. Use the electrical tester to measure the resistance between the terminals of the engine coolant temperature sensor 1.

| Measurement conditions | Tester connections | Standard values |
|---|---|---|
| **Starter switch: LOCK** | **Engine coolant temperature sensor 1 WTM+ – WTM-** | **20 °C {68 °F}: 80 °C {176 °F}: 0.326 – 0.310 kΩ** |

**Do the measurements meet the standard value?**

**YES**

**Go to step 42.**

**NO**

**Replace the engine coolant temperature sensor 1.**
**Go to step 42.**

## 42 Inspect the engine coolant temperature sensor 1 power supply

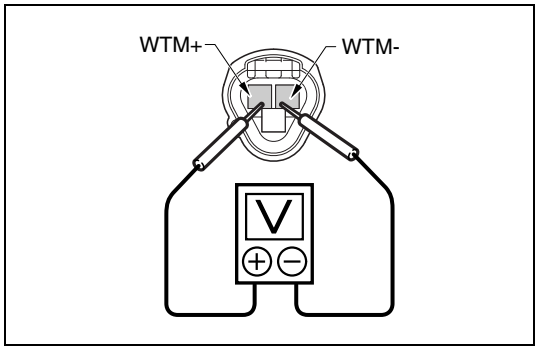


SAPH16F010301087

1. Set the starter switch to the "ON" position.
2. Use the electrical tester to measure the voltage between the terminals of the engine coolant temperature sensor 1 vehicle-side connector.

| Measurement conditions | Tester connections | Standard values |
|---|---|---|
| Starter switch: ON | Engine coolant temperature sensor 1 vehicle-side connector WTM+ – WTM- | 4.5 – 5.5 V |

**Do the measurements meet the standard value?**

**YES**

**Go to step 45.**
**If any failure was found at the step 39 - 41, perform "After-inspection work" of INFORMATION section.**

**NO**

**Go to step 43.**

## 43 Inspect for short-circuit of the engine coolant temperature sensor 1 harness

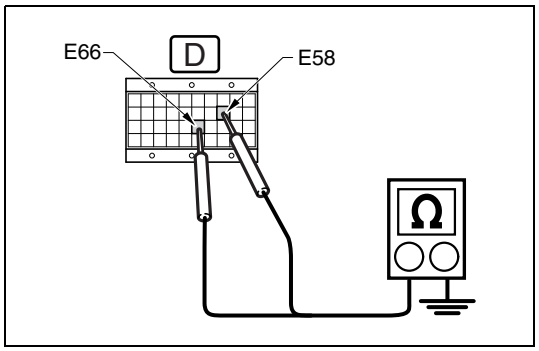


SAPH16F010301088

1. Set the starter switch to the "LOCK" position.
2. Connect the signal check harness to the engine ECU. (Do not connect harness to the engine ECU.)
3. Use the electrical tester to measure the resistance between the terminals of the engine ECU (signal check harness) and ground.

| Measurement conditions | Tester connections | Standard values |
|---|---|---|
| Starter switch: LOCK | Engine ECU (signal check harness) THW+(E66) – Ground AG5(E58) – Ground | ∞ Ω |

**Do the measurements meet the standard value?**

**YES**

**Go to step 44.**

**NO**

**Repair or replace the harness.**
**Go to step 44.**

| 44 | Inspect disconnection of the engine coolant temperature sensor 1 harness |
|---|---|

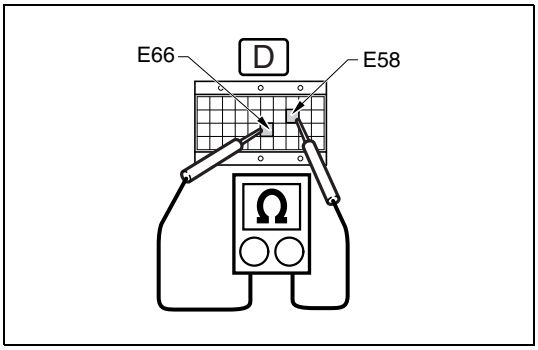

SAPH16F010301089

1. Connect the engine coolant temperature sensor 1 connector.
2. Use the electrical tester to measure the resistance between the terminals of the engine ECU (signal check harness).

| Measurement conditions | Tester connections | Standard values |
|---|---|---|
| Starter switch: LOCK | Engine ECU (signal check harness) THW+(E66) – AG5(E58) | 20 °C {68 °F}: 2.59 – 2.32 kΩ<br>80 °C {176 °F}: 0.326 – 0.310 kΩ |

**Do the measurements meet the standard value?**

**YES**

**Go to step 45.**
**If any failure was found at the step 39 - 43, perform "After-inspection work" of INFORMATION section.**

**NO**

**Repair or replace the harness.**
**Perform "After-inspection work" of INFORMATION section.**

| 45 | Inspect the engine coolant temperature sensor 2 connector |
|---|---|

1. Check the connection of the engine coolant temperature sensor 2 connector (Looseness and poor contact).

**Was any failure found?**

**YES**

**Connect securely, repair if needed.**
**Go to step 46.**

**NO**

**Go to step 46.**

| 46 | Inspect the engine coolant temperature sensor 2 |
|---|---|

1. Check the installation of the engine coolant temperature sensor 2.
2. Make sure there is no dirt or damage to the engine coolant temperature sensor 2.

**Was any failure found?**

**YES**

**Clean the engine coolant temperature sensor 2 and install it properly.**
**If damaged, replace the engine coolant temperature sensor 2.**
**Go to step 47.**

**NO**

**Go to step 47.**

| 47 | Inspect the engine coolant temperature sensor 2 unit |
|---|---|

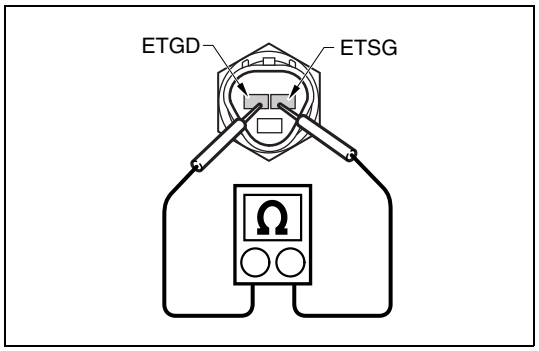


SAPH16F010301090

1. Set the starter switch to the "LOCK" position.
2. Disconnect the engine coolant temperature sensor 2 connector.
3. Use the electrical tester to measure the resistance between the terminals of the engine coolant temperature sensor 2.

| Measurement conditions | Tester connections | Standard values |
|---|---|---|
| Starter switch: LOCK | Engine coolant temperature sensor 2 ETSG – ETGD | 20 °C {68 °F}: 2.59 – 2.32 kΩ<br>80 °C {176 °F}: 0.326 – 0.310 kΩ |

**Do the measurements meet the standard value?**

**YES**

**Go to step 48.**

**NO**

**Replace the engine coolant temperature sensor 2.**
**Go to step 48.**

| 48 | Inspect the engine coolant temperature sensor 2 power supply |
|---|---|

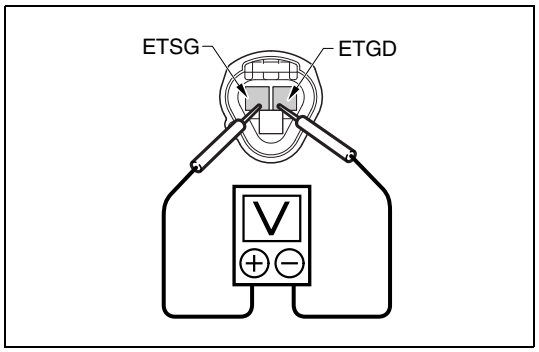


SAPH16F010301091

1. Set the starter switch to the "ON" position.
2. Use the electrical tester to measure the voltage between the terminals of the engine coolant temperature sensor 2 vehicle-side connector.

| Measurement conditions | Tester connections | Standard values |
|---|---|---|
| Starter switch: ON | Engine coolant temperature sensor 2 vehicle-side connector ETSG – ETGD | 4.5 – 5.5 V |

**Do the measurements meet the standard value?**

**YES**

**Go to step 51.**
**If any failure was found at the step 45 - 47, perform "After-inspection work" of INFORMATION section.**

**NO**

**Go to step 49.**

## 49 Inspect for short-circuit of the engine coolant temperature sensor 2 harness

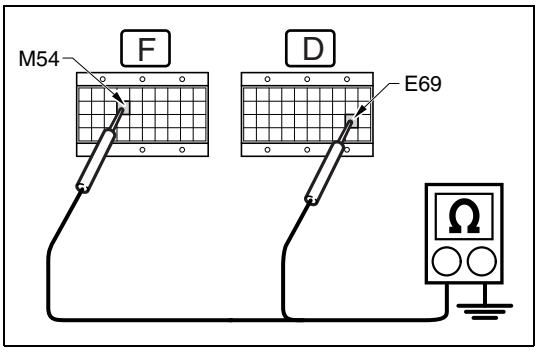

SAPH16F010301092

1. Set the starter switch to the "LOCK" position.
2. Connect the signal check harness to the engine ECU. (Do not connect harness to the engine ECU.)
3. Use the electrical tester to measure the resistance between the terminals of the engine ECU (signal check harness) and ground.

| Measurement conditions | Tester connections | Standard values |
|---|---|---|
| Starter switch: LOCK | Engine ECU (signal check harness) THW2(E69) – Ground<br>AG6(M54) – Ground | ∞ Ω |

**Do the measurements meet the standard value?**

**YES**

**Go to step 50.**

**NO**

**Repair or replace the harness.**
**Go to step 50.**

## 50 Inspect disconnection of the engine coolant temperature sensor 2 harness

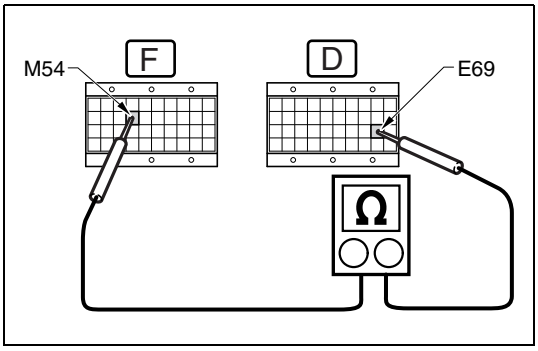

SAPH16F010301093

1. Connect the engine coolant temperature sensor 2 harness.
2. Use the electrical tester to measure the resistance between the terminals of the engine ECU (signal check harness).

| Measurement conditions | Tester connections | Standard values |
|---|---|---|
| Starter switch: LOCK | Engine ECU (signal check harness) THW2(E69) – AG6(M54) | 20 °C {68 °F}: 2.59 – 2.32 kΩ<br>80 °C {176 °F}: 0.326 – 0.310 kΩ |

**Do the measurements meet the standard value?**

**YES**

**Go to step 51.**
**If any failure was found at the step 45 - 49, perform "After-inspection work" of INFORMATION section.**

**NO**

**Repair or replace the harness.**
**Perform "After-inspection work" of INFORMATION section.**

| 51 | **Check the DTC detected (Engine ECU) [HINO DX ll ]** |
|---|---|

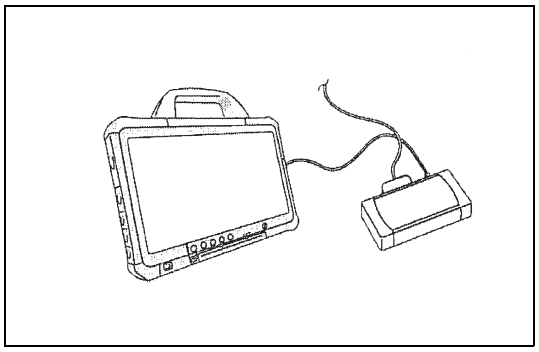

SAPH16F010301094

1. Replace the NOx sensor 1 (SCR upstream) and NOx sensor 2 (SCR downstream).
2. Perform "After-inspection work" of INFORMATION section.
3. Stop the engine and set the starter switch to the "LOCK" position.
4. Connect the vehicle to HINO DX II .
5. Set the starter switch to the "ON" position.
6. Select [Engine] and check if P2201 has been detected.

**Has DTC P2201 been detected?**

**YES**

**Replace the engine ECU.**
**Perform "After-inspection work" of INFORMATION section.**

**NO**

**Procedure completed.**
**Perform "After-inspection work" of INFORMATION section.**

# DTC: P2227

EN01H16F01030F03001164

## P2227: Barometric pressure sensor - rationality

INFORMATION

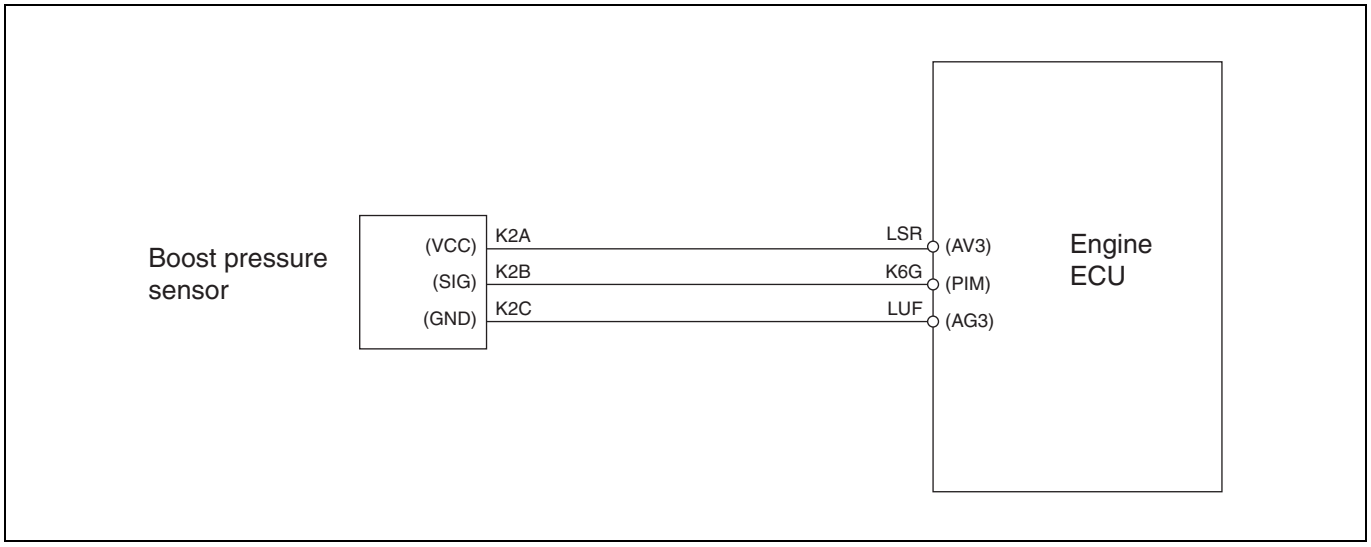


SAPH16F010301095

**1. Technical description**

- –

**<Description of malfunction>**

- Barometric pressure is not correctly recognized.

**2. DTC set condition**

(1) DTC detection condition

- Starter switch OFF.
- Engine is stopped (engine stall condition).
- No characteristics failure of boost pressure sensor

(2) Judgment criteria

- Boost pressure value – barometric pressure value ≥ 18 kPa {2.6 psi}
- Failure determination time ≥ 3 seconds

**3. Reset condition**

- After normal operation is restored and the starter switch is turned OFF.

**4. Indication, warning or system control regulation when the DTC is set.**

- MIL: ON
- SVS light: OFF
- Engine output is restricted.

**5. Symptoms on the vehicle when the DTC is set**

**<Symptoms on the vehicle due to backup control (fail safe function)>**

- Engine output is insufficient.

**<Symptoms on the vehicle due to malfunction>**

- –

**6. Pre-inspection work**

- Check that the battery voltage is in the normal range.

**7. After-inspection work**

- Clear all past DTCs.
- Check that no DTC is detected after test drive.

**8. Estimated failure factors**

- Engine ECU failure
- Temporary operating error due to radio wave interference or noise.
- Boost pressure sensor malfunction.

## INSPECTION PROCEDURE: P2227

| 1 | Inspect the boost pressure sensor connector |
|---|---|

1. Check the connection of the boost pressure sensor connector (Looseness and poor contact).

**Was any failure found?**

**YES**

**Connect securely, repair if needed.**
**Perform "After-inspection work" of INFORMATION section.**

**NO**

**Go to step 2.**

| 2 | Inspect the boost pressure sensor |
|---|---|

1. Check the installation of the boost pressure sensor.
2. Make sure there is no dirt or damage to the boost pressure sensor.
3. Check the boost pressure sensor pipes and hoses and make sure they are free of dirt, clogging, or damage.

**Was any failure found?**

**YES**

**Replace the boost pressure sensor if the boost pressure sensor is dirty, clogged, or damaged.**
**Perform "After-inspection work" of INFORMATION section.**

**NO**

**Go to step 3.**

| 3 | Check the DTC detected (Engine ECU) 2 [HINO DX II ] |
|---|---|

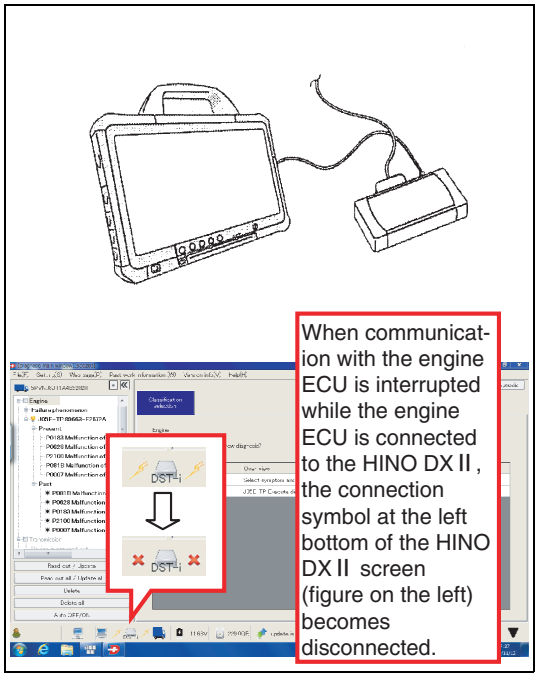


SAPH16F010301096

1. Set the starter switch to the "LOCK" position.
2. Connect the vehicle to HINO DX II .
3. Set the starter switch to the "ON" position.
4. Erase the trouble history.
5. Set the starter switch to the "LOCK" position.
6. Check that the engine ECU main relay is OFF on HINO DX II menu. (This cuts off the communication between HINO DX II and the engine ECU.)
7. Set the starter switch to the "ON" position.
8. Select [Engine] and check if P2227 has been detected.

**Has DTC P2227 been detected?**

**YES**

**Replace the engine ECU.**
**Perform "After-inspection work" of INFORMATION section.**

**NO**

**Procedure completed.**
**Perform "After-inspection work" of INFORMATION section.**

# DTC: P2228 and P2229

EN01H16F01030F03001165

## P2228: Barometric pressure sensor - out of range (out of range low)

INFORMATION

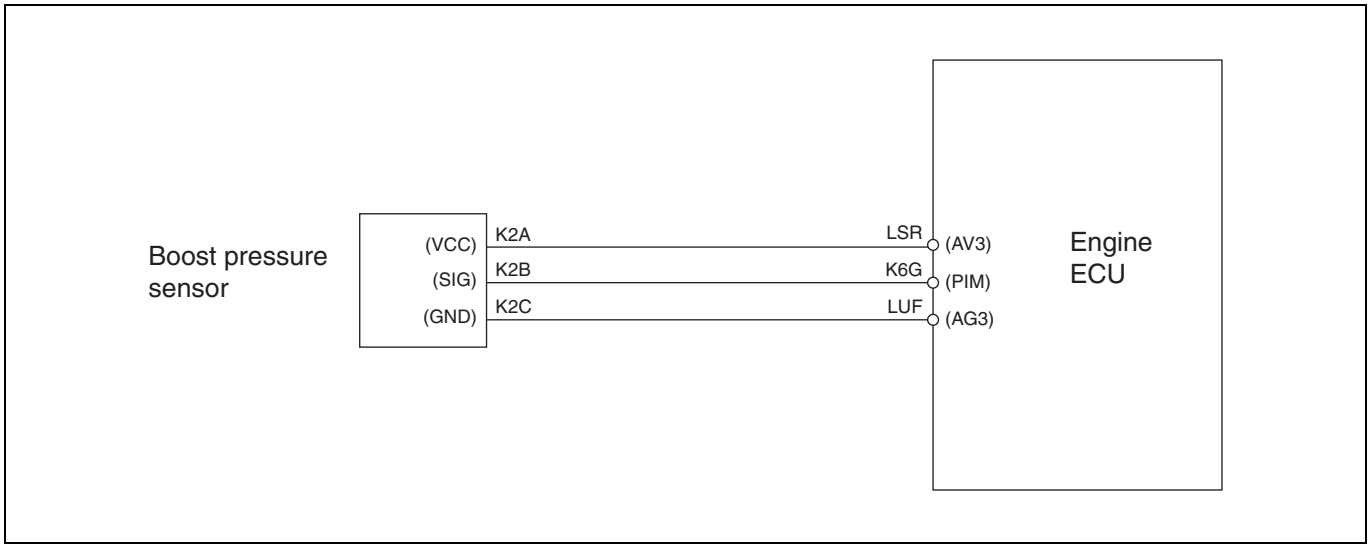


SAPH16F010301097

**1. Technical description**

- –

**<Description of malfunction>**

- The atmospheric pressure sensor (inside the ECU) is not properly functioning.

**2. DTC set condition**

(1) Check conditions

- Starter switch ON.
- Battery voltage is in the range of 10 V to 16 V, and Engine stall, or Engine speed ≥ 500 r/min for 5 seconds.

(2) Judgment criteria

- Barometric pressure sensor voltage < 1.9 V (43.3 kPa {6.3 psi})
- Failure timer ≥ 3 seconds.

**3. Reset condition**

- After restoration to normal condition.

**4. Indication, warning or system control regulation when the DTC is set.**

- MIL: ON
- SVS light: OFF
- Engine output is restricted.

**5. Symptoms on the vehicle when the DTC is set**

**<Symptoms on the vehicle due to backup control (fail safe function)>**

- Engine output is insufficient.

**<Symptoms on the vehicle due to malfunction>**

- –

**6. Pre-inspection work**

- Check that the battery voltage is in the normal range.

**7. After-inspection work**

- Clear all past DTCs.
- Check that no DTC is stored after test drive.

**8. Estimated failure factors**

- Malfunction of engine ECU
- Temporary operating error due to radio wave interference or noise.

## P2229: Barometric pressure sensor - out of range (out of range high)

INFORMATION

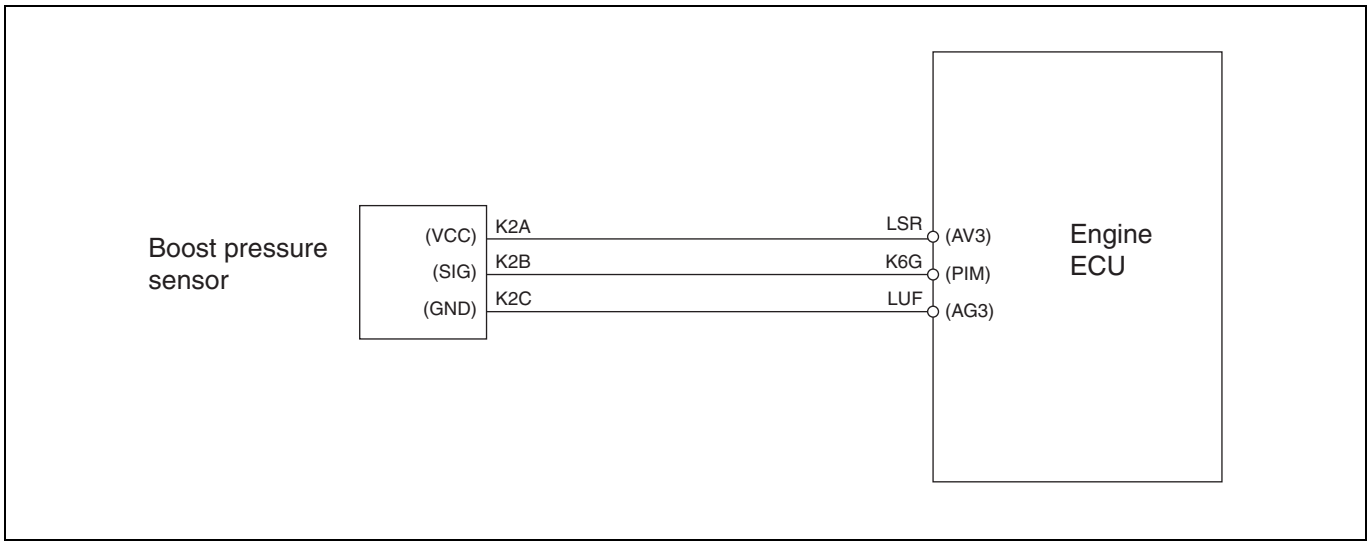


SAPH16F010301098

**1. Technical description**

**<Description of malfunction>**

- The atmospheric pressure sensor (inside the ECU) is not properly functioning.

**2. DTC set condition**

(1) DTC detection condition

- Starter switch ON.
- Battery voltage is in the range of 10 V to 16 V, and Engine stall, or Engine speed ≥ 500 r/min for 5 seconds.

(2) Judgment criteria

- Barometric pressure sensor voltage > 4.2 V (120 kPa {17.4 psi})
- Failure timer ≥ 3 seconds

**3. Reset condition**

- Just after restoration to normal condition.

**4. Indication, warning or system control regulation when the DTC is set.**

- MIL: ON
- SVS light: OFF
- Engine output is restricted.

**5. Symptoms on the vehicle when the DTC is set**

**<Symptoms on the vehicle due to backup control (fail safe function)>**

- Engine output is insufficient.

**<Symptoms on the vehicle due to malfunction>**

- –

**6. Pre-inspection work**

- Check that the battery voltage is in the normal range.

**7. After-inspection work**

- Clear all past DTCs.
- Check that no DTC is stored after test drive.

**8. Estimated failure factors**

- Malfunction of engine ECU
- Temporary operating error due to radio wave interference or noise.

## INSPECTION PROCEDURE: P2228 and P2229

| 1 | Check the DTC detected (Engine ECU) 1 |
|---|---|

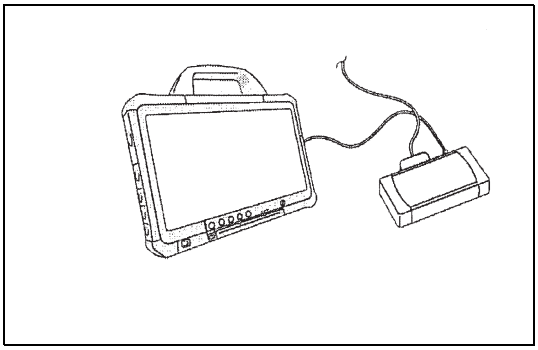

SAPH16F010301099

1. Set the starter switch to the "LOCK" position.
2. Connect the vehicle to HINO DX II .
3. Set the starter switch to the "ON" position.
4. Select [Engine] and check if any DTC other than (P2228 or P2229) has been detected.

**Has a DTC other than (P2228 or P2229) been detected?**

**YES**

**Go to the diagnostic procedure of a related DTC.**

**NO**

**Go to step 2.**

| 2 | Check the DTC detected (Engine ECU) 2 |
|---|---|

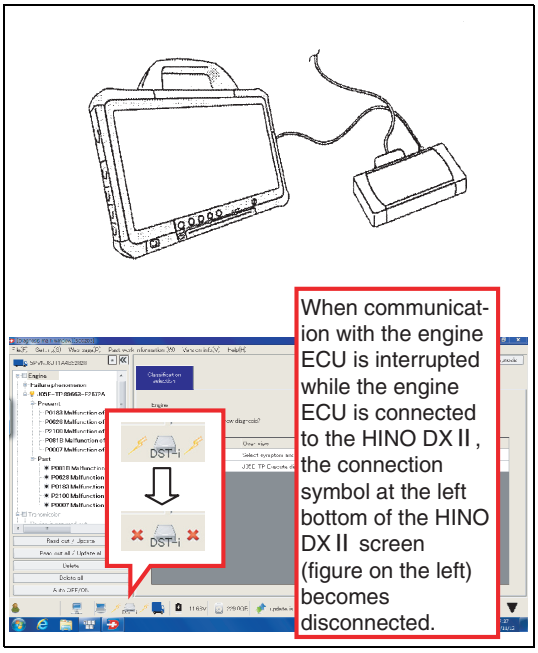


SAPH16F010301100

1. Erase the trouble history.
2. Set the starter switch to the "LOCK" position.
3. Make sure the engine ECU main relay is OFF in HINO DX II menu. (This cuts off the communication between HINO DX II and the engine ECU.)
4. Set the starter switch to the "ON" position.
5. Select [Engine] and check if DTC has been detected.

**Has DTC (P2228 or P2229) been detected?**

**YES**

**Replace the engine ECU.**
**Perform "After-inspection work" of INFORMATION section.**

**NO**

**Procedure completed.**
**Perform "After-inspection work" of INFORMATION section.**

# DTC: P2269

EN01H16F01030F03001166

## P2269: Water in Fuel Condition

INFORMATION

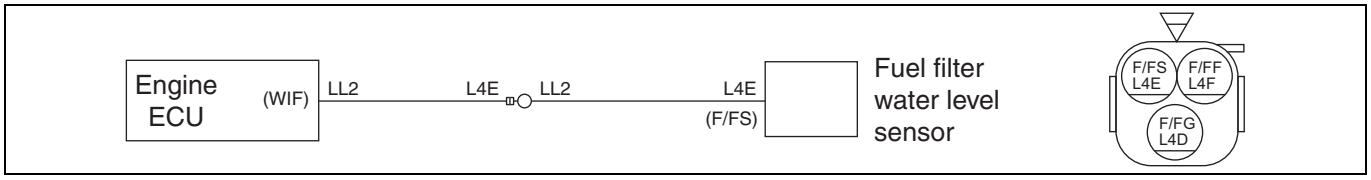


SAPH16F010301101

**1. Technical description**

**<Description of malfunction>**

- Water trapped in the fuel filter has been detected.

**2. DTC set condition**

(1) DTC detection condition

- Starter switch ON.
- Battery voltage is in the range of 10 V to 16 V.

(2) Judgment criteria

- Fuel filter water level sensor switch is ON.

**3. Reset condition**

- Check that water has not accumulated in the fuel filter.

**4. Indication, warning or system control regulation when the DTC is set.**

- MIL: OFF
- SVS light: OFF

**5. Symptoms on the vehicle when the DTC is set**

**<Symptoms on the vehicle due to backup control (fail safe function)>**

- –

**<Symptoms on the vehicle due to malfunction>**

- –

**6. Pre-inspection work**

- Check that the battery voltage is in the normal range.

**7. After-inspection work**

- Clear all past DTCs.
- Check that no DTC is stored after test drive.

**8. Estimated failure factors**

- Water has been trapped in the fuel filter.

## INSPECTION PROCEDURE: P2269

| 1 | Inspect the fuel filter |
|---|---|

1. Check if water has accumulated in the fuel filter.

**Was any failure found?**

| YES | NO |
|---|---|
| **Drain water out of the fuel filter. Perform "After-inspection work" of INFORMATION section.** | **Go to step 2.** |

| 2 | Inspect the fuel filter water level sensor connector |
|---|---|

1. Check the connection of the water level sensor connector (Looseness and poor contact).

**Was any failure found?**

| YES | NO |
|---|---|
| **Connect securely, repair if needed. Perform "After-inspection work" of INFORMATION section.** | **Go to step 3.** |

| 3 | Inspect the fuel filter water level sensor unit |
|---|---|

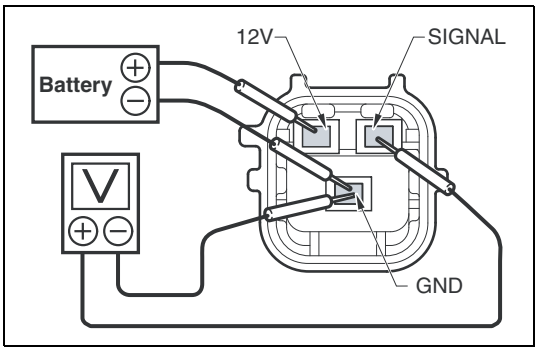


SAPH16F010301102

1. Set the starter switch to the "LOCK" position.
2. Disconnect the fuel filter water level sensor connector.
3. Connect a battery between the 12 V terminal in the fuel filter water level sensor and the GND terminal.
4. Use the electrical tester to measure the voltage between the fuel filter water level sensor SIGNAL terminal and GND terminal.

| Measurement conditions | Tester connections | Standard values |
|---|---|---|
| **Starter switch: LOCK** | **Fuel filter water level sensor SIGNAL – GND** | **0 V (no water) 0.6 – 0.7 V (Water level within allowable range)** |

**Do the measurements meet the standard value?**

| YES | NO |
|---|---|
| **Go to step 4.** | **Replace the fuel filter water level sensor. Perform "After-inspection work" of INFORMATION section.** |

## 4 Inspect the fuel filter water level sensor power supply

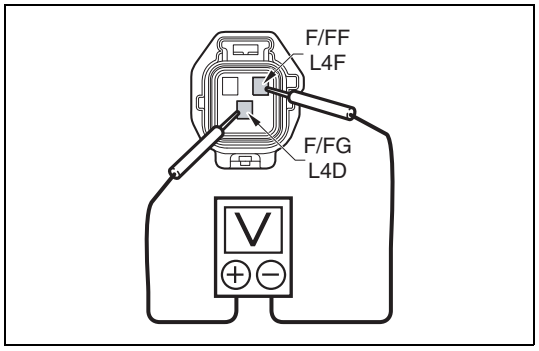

SAPH16F010301103

1. Set the starter switch to the "ON" position.
2. Use the electrical tester to measure the voltage between the terminals of the fuel filter water level sensor vehicle-side connector.

| Measurement conditions | Tester connections | Standard values |
|---|---|---|
| **Starter switch: ON** | **Fuel filter water level sensor vehicle-side connector F/FF – F/FG** | **10 – 16 V** |

**Do the measurements meet the standard value?**

| YES | NO |
|---|---|
| **Go to step 5.** | **Inspect the fuel filter water level sensor power circuit. Perform "After-inspection work" of INFORMATION section.** |

## 5 Inspect for short-circuit in wire harness of the fuel filter water level sensor

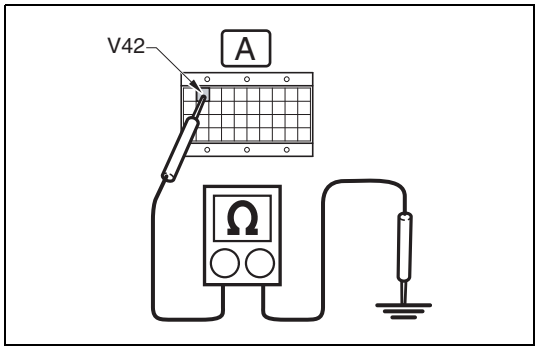

SAPH16F010301104

1. Set the starter switch to the "LOCK" position.
2. Connect the signal check harness. (Do not connect the harness to the ECU.)
3. Use the electrical tester to measure the resistance between the engine ECU (signal check harness) WIF (V42) terminal and ground.

| Measurement conditions | Tester connections | Standard values |
|---|---|---|
| **Starter switch: LOCK** | **Engine ECU (signal check harness) WIF(V42) – Ground** | **∞ Ω** |

**Do the measurements meet the standard value?**

YES

**Go to step 6.**

NO

**Repair or replace the harness.**
**Perform "After-inspection work" of INFORMATION section.**

## 6 Inspect for disconnection in wire harness of the fuel filter water level sensor

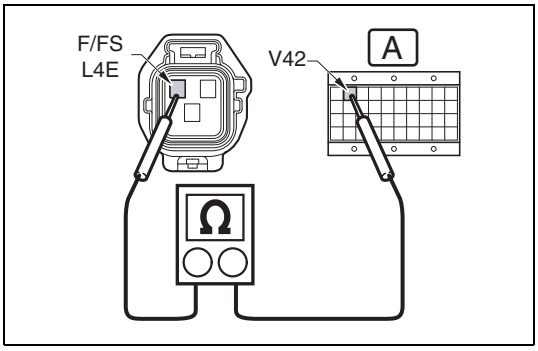


SAPH16F010301105

1. Use the electrical tester to measure the resistance between the engine ECU (signal check harness) terminal and fuel filter water level sensor vehicle-side connector terminal.

| Measurement conditions | Tester connections | Standard values |
|---|---|---|
| Starter switch: LOCK | Engine ECU (signal check harness) – Fuel filter water level sensor vehicle-side connector WIF(V42) – F/FS | Less than 1 Ω |

**Do the measurements meet the standard value?**

YES

**Go to step 7.**

NO

**Repair or replace the harness.**
**Perform "After-inspection work" of INFORMATION section.**

## 7 Check the DTC detected (Engine ECU) [HINO DX II ]

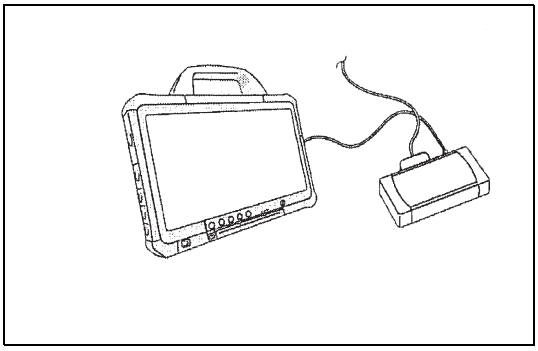

SAPH16F010301106

1. Set the starter switch to the "LOCK" position.
2. Connect the vehicle to HINO DX II .
3. Set the starter switch to the "ON" position.
4. Select [Engine] and check if P2269 has been detected.

**Has DTC P2269 been detected?**

YES

**Replace the engine ECU.**
**Perform "After-inspection work" of INFORMATION section.**

NO

**Procedure completed.**
**Perform "After-inspection work" of INFORMATION section.**

# DTC: P226C

EN01H16F01030F03001167

## P226C: Boost pressure slow response

INFORMATION

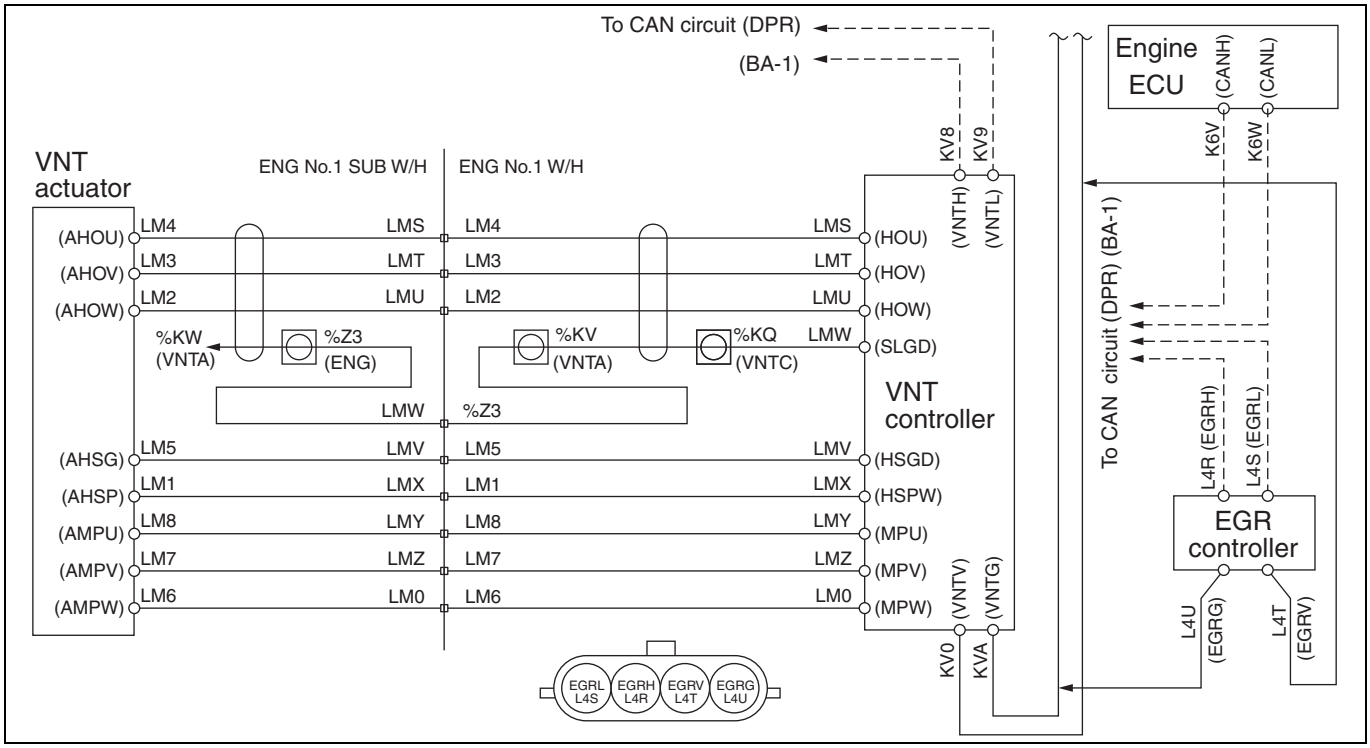


SAPH16F010301107

**1. Technical description**

- The VNT actuator steplessly moves the nozzle vane via the REA (Rotary Electric Actuator) and controls turbocharger speed and boost pressure.
- The sensor inside the REA detects the amount of actuator movement and constantly monitors the nozzle vane target opening and actual opening.

**<Description of malfunction>**

- VNT response delay is detected.

**2. DTC set condition**

(1) DTC detection condition

- 10 minutes after engine start-up
  * Estimated boost pressure variation, which is calculated from the engine speed and fuel injection rate, is either ≥ 30 kPa/sec {4.4 psi} or ≤ -35 kPa/sec {-5.1 psi}.
  * Engine speed fluctuation is less than 100 r/min.

(2) Judgment criteria

- Difference between [estimated boost pressure – actual boost pressure] is either ≥ 55 kPa {8.0 psi} or ≤ -30 – -60 kPa {-4.4 – -8.7 psi}.

**3. Reset condition**

- After normal operation is restored and the starter switch is on the "LOCK" position.

**4. Indication, warning or system control regulation when the DTC is set.**

- MIL: ON
- SVS light: OFF

**5. Symptoms on the vehicle when the DTC is set**

**<Symptoms on the vehicle due to backup control (fail safe function)>**

- –

**<Symptoms on the vehicle due to malfunction>**

- Faulty engine revving (engine hesitation)

**6. Pre-inspection work**

- Check that the battery voltage is in the normal range.

**7. After-inspection work**

- Clear all past DTCs.
- Check that no DTC is detected after test drive.

**8. Estimated failure factors**

- Hesitation or sticking due to corrosion of VNT link system rods
- Faulty connector contact to REA
- Harness disconnection or short-circuit
- EGR valve malfunction
- Intake system failure
- Boost pressure sensor malfunction

## INSPECTION PROCEDURE: P226C

| 1 | Check the response delay of the VNT controller [HINO DX II ] |
|---|---|

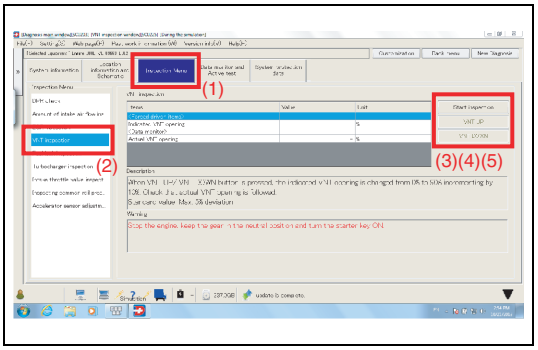


SAPH16F010301108

1. Set the starter switch to the "LOCK" position.
2. Connect the vehicle to HINO DX II .
3. Set the starter switch to the "ON" position.
4. Select [Engine] on the screen of HINO DX II .
5. Select [VNT inspection] from the [Inspection Menu] and inspect the response delay at the Target VNT position and Actual VNT position.

**⚠ CAUTION**
**Perform the inspection while the engine is stopped to avoid engine damages.**

<Inspection procedure>
(1) Select [Inspection Menu].
(2) Select [VNT inspection].
(3) Click [Start inspection].
(4) Click [VNT UP].
• Inspect the response delay at each step of the Target VNT position and Actual VNT position from 0 to 90 %.
(5) Click [VNT DOWN].
• Inspect the response delay at each step of the Target VNT position and Actual VNT position from 90 to 0 %.

**HINT**
**The VNT opening position changes of 10 % per step between 0 – 90 %.**

| Standard values |
|---|
| The response delay should be less than 3 seconds. |

**Do the measurements meet the standard value?**

**YES**

**Go to step 2.**

**NO**

**Replace the turbocharger.**
**Perform "After-inspection work" of INFORMATION section.**

| 2 | Check the response delay of the EGR valve [HINO DX II ] |
|---|---|

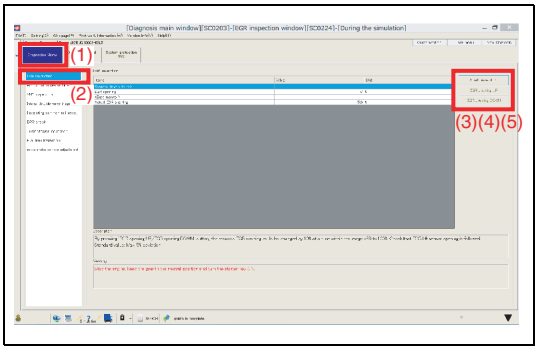


SAPH16F010301109

1. Check the time lag (following characteristics) of the target EGR valve opening and actual EGR valve opening.

**⚠ CAUTION**
**Perform the inspection while the engine is stopped to avoid engine damages.**

<Inspection procedure>
(1) Select [Inspection Menu].
(2) Select [EGR inspection].
(3) Click [Start inspection].
(4) Click [EGR opening UP]:
• Check each step from 0 % – 100 % of the time lag (following characteristics) of the target EGR valve opening and actual EGR valve opening.
(5) Click [EGR opening DOWN]:
• Check each step from 100 % – 0 % of the time lag (following characteristics) of the target EGR valve opening and actual EGR valve opening.

**HINT**
**In EGR openings from 0 % – 100 %, 1 step corresponds to a 10 % change.**

| Standard values |
|---|
| The response delay should be less than 5 seconds. |

**Do the measurements meet the standard value?**

**YES**

**Go to step 3.**

**NO**

**Replace the EGR valve.**
**Perform "After-inspection work" of INFORMATION section.**

| 3 | Inspect the air cleaner element |
|---|---|

1. Check there is no dirt, damage or clogging in the air cleaner element.

2. Make sure the element is a Hino genuine part.

**Was any failure found?**

**YES**

**Clean or replace the air cleaner element.**
**Perform "After-inspection work" of INFORMATION section.**

**NO**

**Go to step 4.**

| 4 | Check the air intake system |
|---|---|

1. Check the air intake system (between air flow sensor and diesel throttle) for dirt, clogging, or damage.

**Was any failure found?**

| YES | NO |
|---|---|
| **Clean or replace the faulty part.<br>Perform "After-inspection work" of INFORMATION section.** | **Go to step 5.** |

| 5 | Inspect the boost pressure sensor |
|---|---|

1. Check the installation of the boost pressure sensor.
2. Make sure there is no dirt or damage to the boost pressure sensor.

**Was any failure found?**

| YES | NO |
|---|---|
| **Clean the boost pressure sensor and install it properly.<br>If dirt, clogging or damage was found, replace the sensor.<br>Perform "After-inspection work" of INFORMATION section.** | **Go to step 6.** |

| 6 | Check the connector connection [HINO DX ll ] |
|---|---|

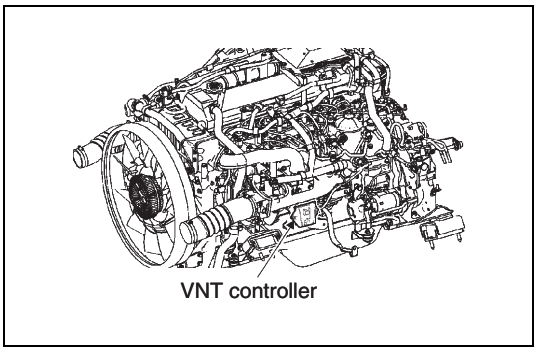


SAPH16F010301110

1. Set the starter switch to the "LOCK" position.
2. Disconnect the connector connecting the VNT actuator and VNT controller and then securely re-connect it.
3. Set the starter switch to the "ON" position.
4. Select [Engine] and check if P226C has been detected.

**Has DTC P226C been detected?**

| YES | NO |
|---|---|
| **Go to step 7.** | **Procedure completed.<br>(Poor contact of the connector)<br>Perform "After-inspection work" of INFORMATION section.** |

## 7 Check the VNT controller power supply circuit

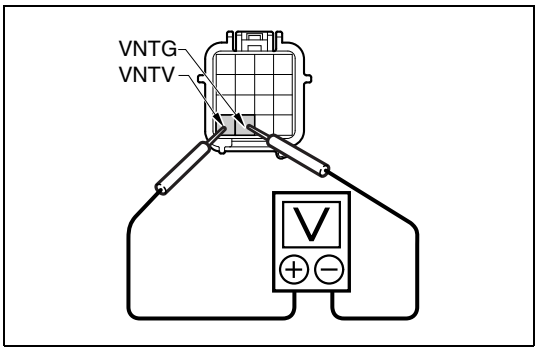


SAPH16F010301111

1. Set the starter switch to the "LOCK" position.
2. Disconnect the VNT controller connector.
3. Set the starter switch to the "ON" position.
4. Use the electrical tester to measure the voltage between the terminals of the VNT controller vehicle-side connector.

| Measurement conditions | Tester connections | Standard values |
|---|---|---|
| **Starter switch: ON** | **VNT controller vehicle-side connector<br>VNTV – VNTG** | **10 V or more** |

**Do the measurements meet the standard value?**

| YES | NO |
|---|---|
| **Go to step 8.** | **Check the VNT controller power supply circuit.<br>Perform "After-inspection work" of INFORMATION section.** |

| 8 | Inspect the VNT actuator harness |
|---|---|

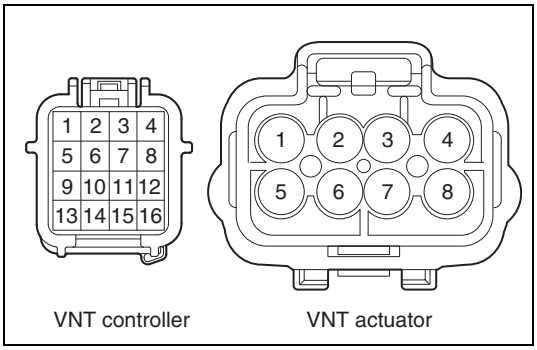


SAPH16F010301112

1. Set the starter switch to the "LOCK" position.
2. Disconnect the connector connecting the VNT actuator and VNT controller.
3. Use the electrical tester to measure the resistance from the VNT controller vehicle-side connector to each of the terminals in the VNT actuator vehicle-side connector.

| Measurement conditions | Tester connections | Standard values |
|---|---|---|
| **Starter switch: LOCK** | **Controller – Actuator**<br>**1 terminal – 4 terminal**<br>**2 terminal – 3 terminal**<br>**3 terminal – 2 terminal**<br>**4 terminal – 5 terminal**<br>**8 terminal – 1 terminal**<br>**10 terminal – 8 terminal**<br>**11 terminal – 7 terminal**<br>**12 terminal – 6 terminal** | **1 Ω or less** |

**Do the measurements meet the standard value?**

**YES**

**Go to step 9.**

**NO**

**Repair or replace the harness.**
**Perform "After-inspection work" of INFORMATION section.**

| 9 | Check the operation of the VNT actuator (DC motor) [HINO DX ll ] |
|---|---|

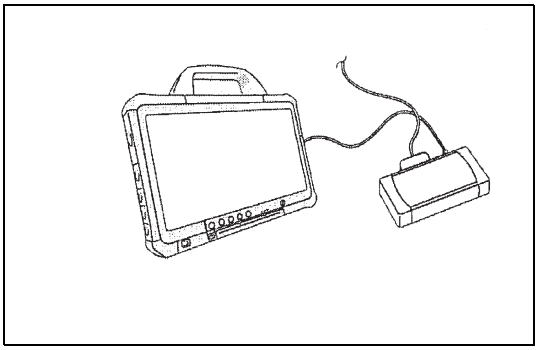

SAPH16F010301113

1. Connect the VNT controller and VNT actuator connector.
2. Set the starter switch to the "ON" position.
3. Erase the trouble history.
4. Set the starter switch to the "LOCK" position.
5. Set the starter switch to the "ON" position again.
6. Select [Engine] and check if P226C has been detected.

**HINT**

**Turn the starter switch OFF and ON verifies the wiping operation of the VNT actuator (DC motor).**

**Has DTC P226C been detected?**

**YES**

**Replace the turbocharger.**
**Perform "After-inspection work" of INFORMATION section.**

**NO**

**Procedure completed.**
**Perform "After-inspection work" of INFORMATION section.**

# DTC: P229F

EN01H16F01030F03001168

## P229F: NOx sensor (SCR downstream) - Performance and Monitoring capability

INFORMATION

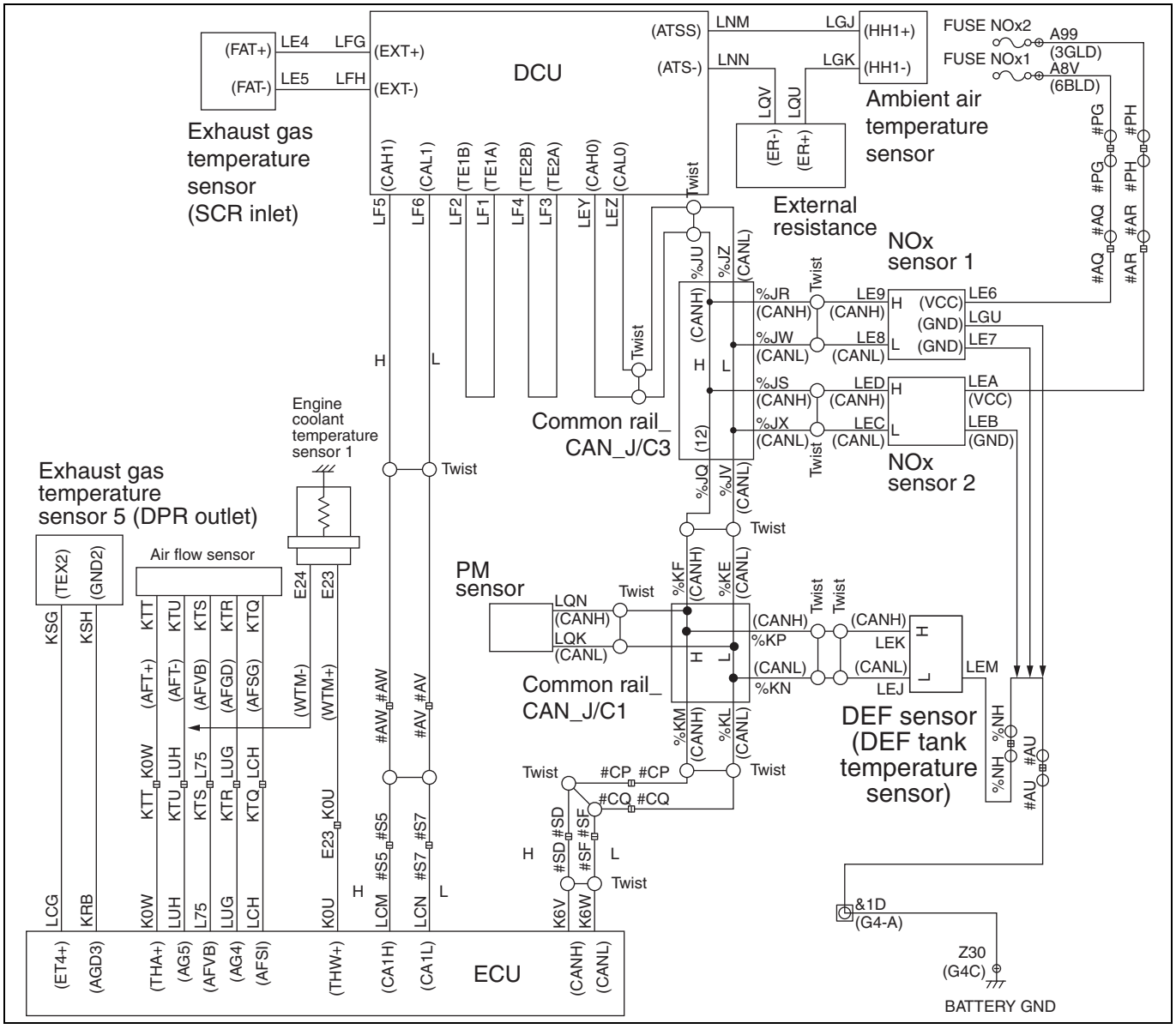


SAPH16F010301114

### 1. Technical description

- NOx sensor 2 (SCR downstream) confirms correct value by comparing with the actual NOx sensor 1 (SCR upstream) value, the NOx sensor 2 (SCR downstream) value and the NOx model value calculated by the ECU.
- NOx model value is calculated according to the engine's state and properties.
- At low NOx concentration, NOx sensor 2 (SCR downstream) confirms correct value by comparing with the Judgement criteria.

**<Description of malfunction>**

- Characteristics failure of NOx sensor 2 (SCR downstream) is detected.

**2. DTC set condition**

(1) DTC detection condition

- Target NOx conversion ratio ≤ 0.76
- NOx sensor 1 (SCR upstream) is valid.
- NOx sensor 2 (SCR downstream) is valid.

Condition below continue ≥ 0.1 sec.

- NOx concentration (SCR upstream) < 110ppm.
- Exhaust gas mass flow < 100kg/h

Then, condition below within 0.7 sec

- NOx concentration (SCR upstream) ≥ 281 ppm.
- Exhaust gas mas flow ≥ 400 kg/h

Then, condition below continue ≥ 0.8 sec

- NOx concentration (SCR upstream) ≥ 281 ppm.
- Exhaust gas mass flow ≥ 400 kg/h

(2) Judgment criteria

- Difference between minimum and maximum of NOx concentration (SCR down stream) ≤ 10 ppm.

**3. Reset condition**

- After normal operation is restored.

**4. Indication, warning or system control regulation when the DTC is set.**

- MIL: ON
- SVS light: OFF
- DEF injection is stopped.
- NOx purification function is stopped.

**5. Symptoms on the vehicle when the DTC is set**

**<Symptoms on the vehicle due to backup control (fail safe function)>**

- Exhaust gas purification function has deteriorated.

**<Symptoms on the vehicle due to malfunction>**

- –

**6. Pre-inspection work**

- Check that the battery voltage is in the normal range.

**7. After-inspection work**

- Clear all past DTCs.
- After starting the DPR automatic regeneration, form the DTC detection condition.
- Check that no DTC is detected after test drive.

**8. Estimated failure factors**

- Harness disconnection or short-circuit
- Failure of NOx sensor 1 (SCR upstream)
- NOx sensor 2 (SCR downstream) failure
  - Sensor internal circuit failure
  - NOx sensor controller failure
- Failure of sensor used in calculating model value:
  - Air flow sensor
  - Boost pressure sensor
  - Intake manifold temperature sensor
  - Engine coolant temperature sensor
  - EGR failure

## INSPECTION PROCEDURE: P229F

| 1 | Check the DTC detected [HINO DX ll ] |
|---|---|

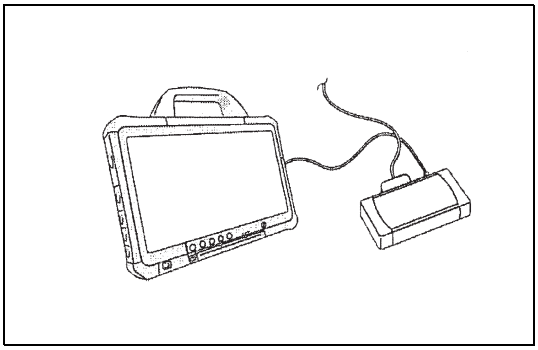

SAPH16F010301115

1. Set the starter switch to the "LOCK" position.
2. Connect the diagnostic system (HINO DX II ) to the vehicle.
3. Set the starter switch to the "ON" position.
4. Select [Engine] on the screen of HINO DX II and check it the DTC P229F has been detected.

**Has any DTC related to P229F been detected?**

**YES**

**Go to diagnosis procedure of the related DTC.**
**After repair, go to step 2.**

**NO**

**Go to step 2.**

| 2 | Inspect the DEF |
|---|---|

1. Check the DEF concentration.

| Standard values |
|---|
| 31.8 – 33.2 % (DEF value (Brand new)) |

**Are the measurements excessively different?**

**YES**

**If the DEF concentration is excessively different from the reference value, replace the DEF. Leave the starter switch to the "ON" position, drain the DEF through the tank drain, and then refill the tank with at least 5 liters {1.3 gallons} of DEF.**
**Afterward, drive the vehicle and confirm that the problem does not recur under driving conditions. Perform "After-inspection work" of INFORMATION section.**

**NOTICE**
**When changing the DEF, place (leave) the starter switch to the "ON" position.**

**NO**

**Go to step 3.**

| 3 | Inspect the exhaust gas leakage |
|---|---|

1. Check the exhaust gas flow downstream of the turbocharger and confirm that there is no leakage of exhaust gas.

**Was any failure found?**

**YES**

**Repair or replace the area where the leak is. Perform "After-inspection work" of INFORMATION section.**

**NO**

**Go to step 4.**

| 4 | Inspect the NOx sensor No.1 (SCR upstream) [HINO DX II ] |
|---|---|

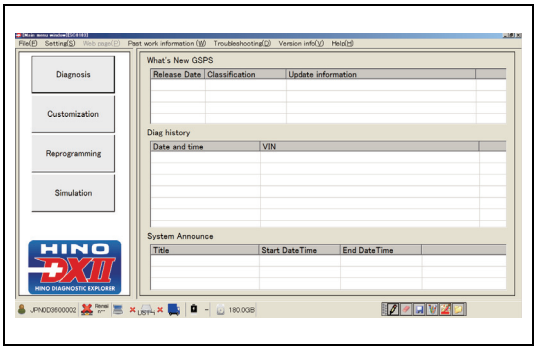


SAPH16F010301116

1. Turn the starter key to the "ON" position.

2. Start DX II .

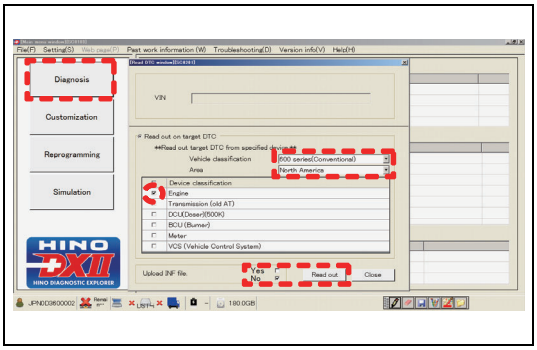


SAPH16F010301117

3. On the DX II window, click [Diagnosis].
Select the vehicle model and region, and check [Engine].
Select either Upload INF file and then [Read out] to read out.

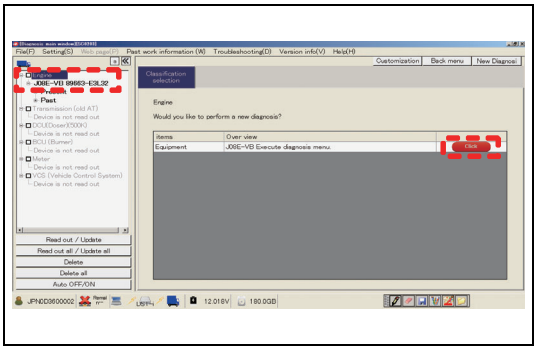


SAPH16F010301118

4. Select [Engine], and press the click button.

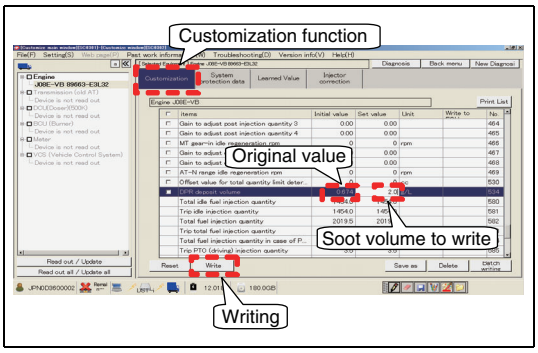


SAPH16F010301119

5. Writing soot volume

**HINT**

**As in the window on the left, write a soot volume [2.0] using the customization function. Record the original value not to forget. The example in the window is [0.674].**

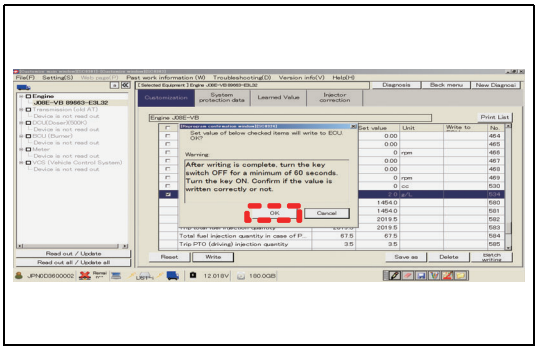

SAPH16F010301120

6. Turn the starter key "OFF" and then "ON" according to the instruction.
Then, click [OK].

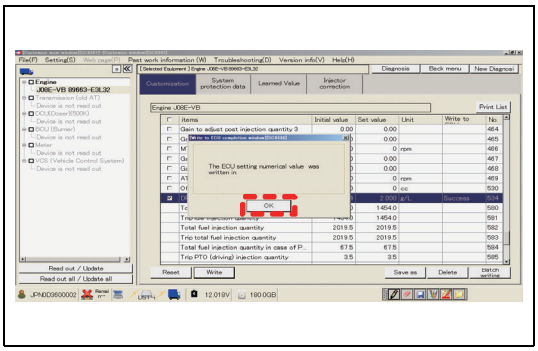

SAPH16F010301121

7. Check that ECU writing has been completed. Click [OK].
Refer to the window on the left.

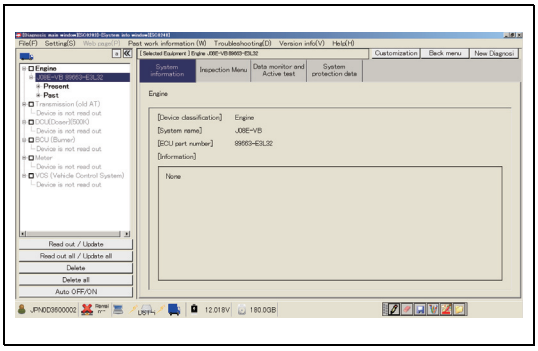

SAPH16F010301122

8. Start monitoring using the data monitoring function of DX II .
Check the output waveform of the NOx sensor on the monitor.

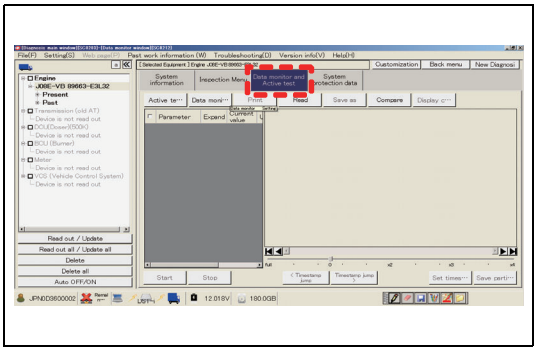

SAPH16F010301123

9. Select [Data monitor and Active test].

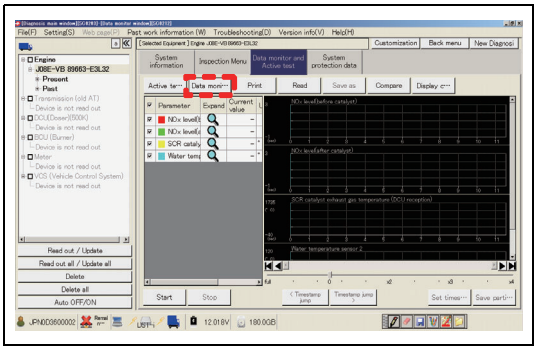

SAPH16F010301124

10. Select [Data monitor Setting].
Refer to the window on the left.

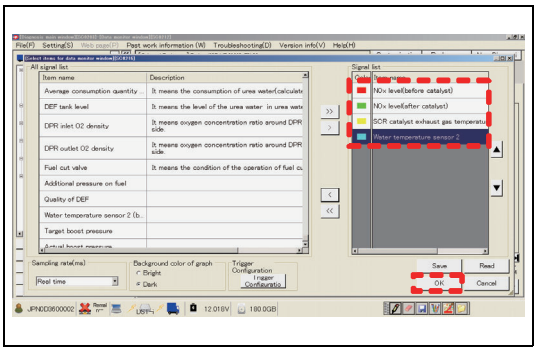

SAPH16F010301125

11. From the selection window on the left, select the following 4 items. Click OK.

- NOx level (before catalyst)
- NOx level (after catalyst)
- SCR catalyst exhaust gas temperature (DCU reception)
- Water temperature sensor 1

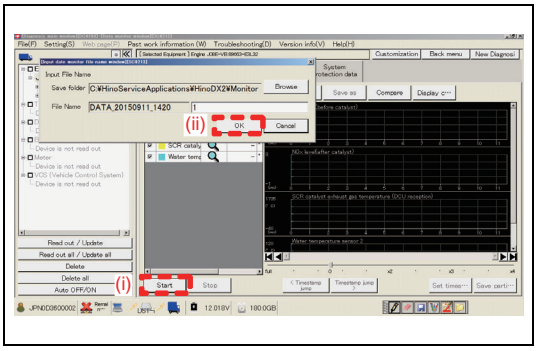

SAPH16F010301126

12. (i) Click [Start] to display the window to check the data storage destination.
(ii) Click [OK] to start data monitoring.

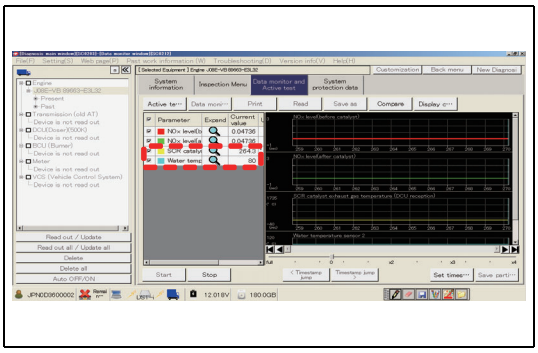

SAPH16F010301127

13. Start the engine.

14. Press the DPR manual regeneration switch of the vehicle.
    Start regeneration.

**HINT**

**Since NOx sensor waveform is not detected until the exhaust gas temperature and coolant temperature reach the specified values or more, perform DPR regeneration to increase the exhaust gas temperature and coolant temperature.**

15. On the DX II data monitor, monitor the SCR catalyst temperature, coolant temperature and NOx levels before and after.

16. When the SCR catalyst temperature reaches 250 °C {482 °F} and coolant temperature reaches 70 °C {158 °F}, press the DPR switch (button) to stop the regeneration.

17. Following the determination manual, determine the quality of the sensor according to the NOx sensor waveform data on the monitor.
    This is the end of the trouble shooting.

18. Turn the starter key OFF once to stop the engine. Turn it ON again.
19. After completing the trouble shooting, rewrite the soot volume to the original value.
    Select [Engine] as in the window on the left. Click the [Click] button.

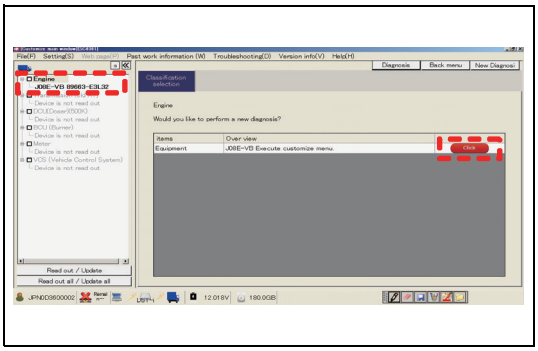

SAPH16F010301128

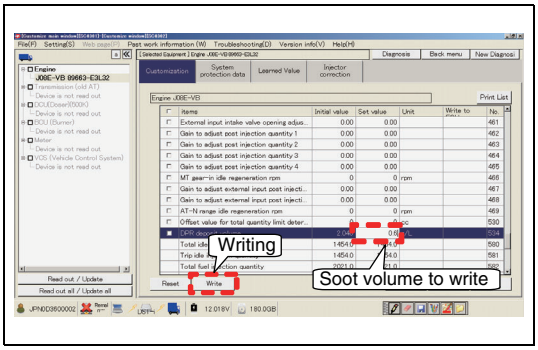


SAPH16F010301129

20. Rewrite the soot volume to the recorded original value.
    Refer to the window on the left.
    For the case of this window, the soot volume to write is [0.6].

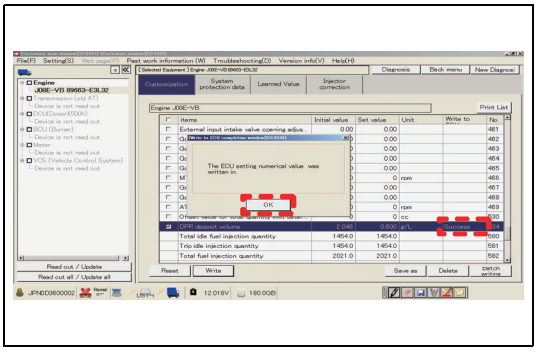

SAPH16F010301130

21. Check that the original soot volume has been written, and click [OK].
Refer to the window on the left.

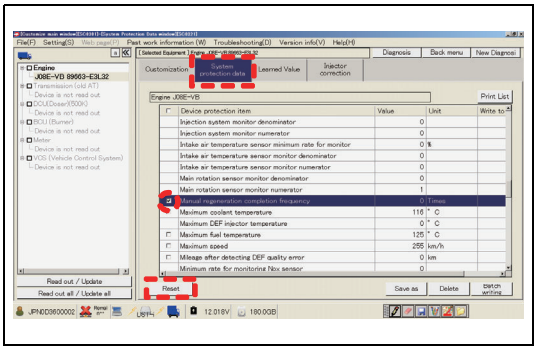

SAPH16F010301131

22. Select [System protection data] to check [Manual regeneration completion frequency]. Click [Reset]. Refer to the window on the left.

**NOTICE**

**Unless this memory reset is performed, the DTC of abnormal regeneration frequency would turn on.**

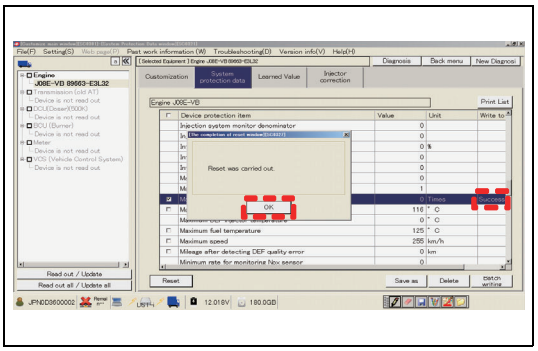

SAPH16F010301132

23. Check that the memory reset has been completed. Click [OK].
Refer to the window on the left.

**Was any failure found?**

**YES**

**Replace the NOx sensor 1 (SCR upstream) Perform "After-inspection work" of INFORMATION section.**

**NO**

**Go to step 5.**

| 5 | Inspect the NOx sensor No.2 (SCR downstream) [HINO DX II ] |
|---|---|

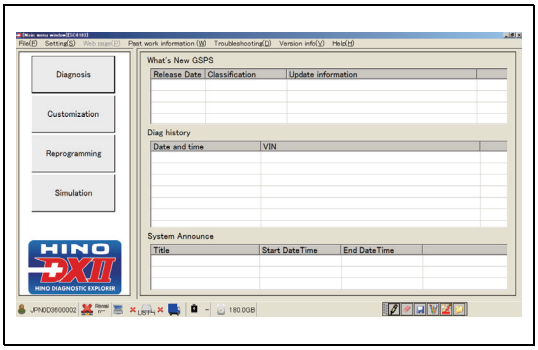


SAPH16F010301133

1. Turn the starter key to the "ON" position.

2. Start DX II .

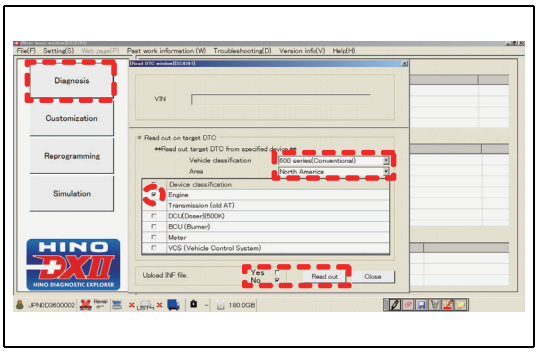


SAPH16F010301134

3. On the DX II window, click [Diagnosis].
   Select the vehicle model and region, and check [Engine].
   Select either Upload INF file and then [Read out] to read out.

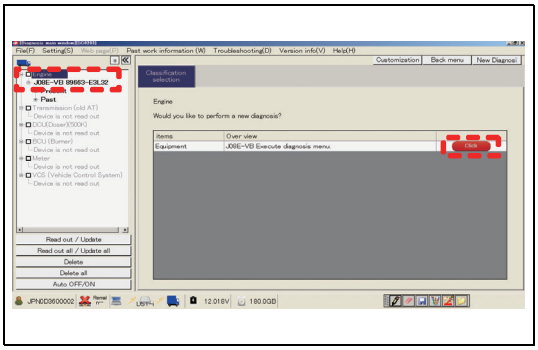


SAPH16F010301135

4. Select [Engine], and press the click button.

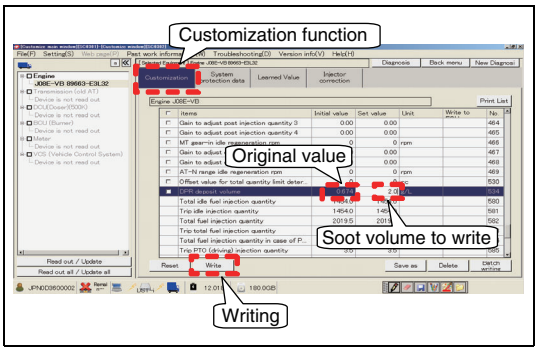


SAPH16F010301136

5. Writing soot volume

**HINT**

**As in the window on the left, write a soot volume [2.0] using the customization function. Record the original value not to forget. The example in the window is [0.674].**

6. Turn the starter key "OFF" and then "ON" according to the instruction.
Then, click [OK].

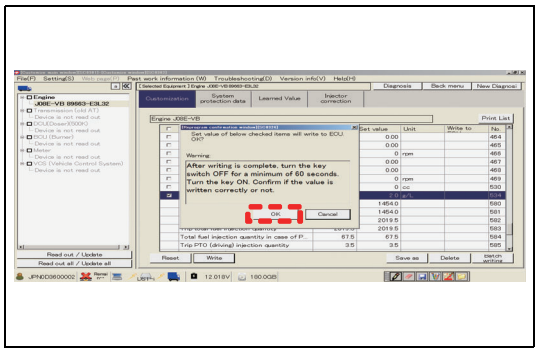


SAPH16F010301137

7. Check that ECU writing has been completed. Click [OK].
Refer to the window on the left.

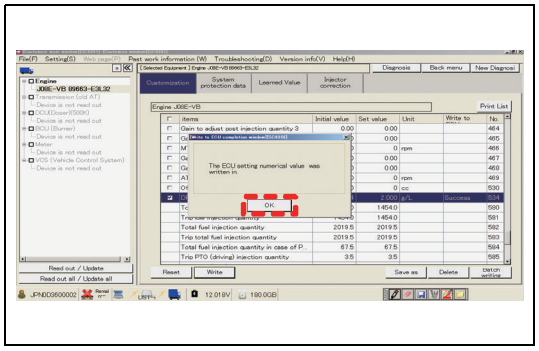


SAPH16F010301138

8. Start monitoring using the data monitoring function of DX II .
Check the output waveform of the NOx sensor on the monitor.

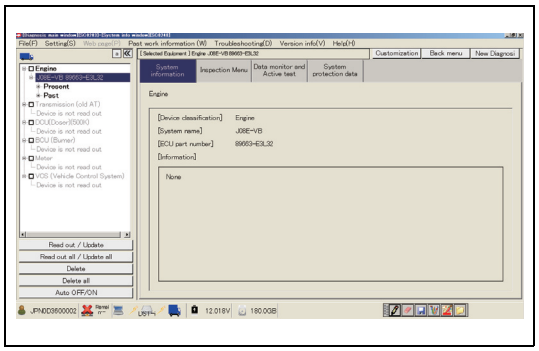

SAPH16F010301139

9. Select [Data monitor and Active test].

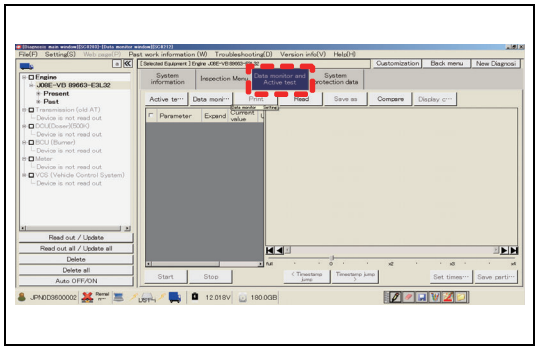

SAPH16F010301140

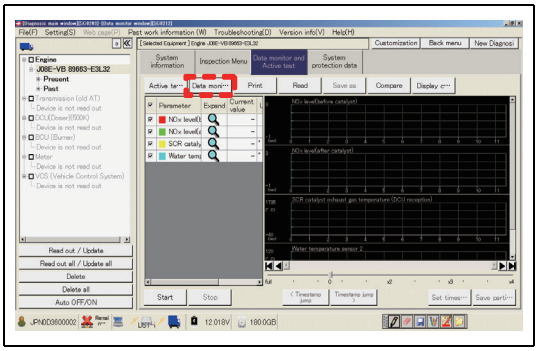

SAPH16F010301141

10. Select [Data monitor Setting].
Refer to the window on the left.

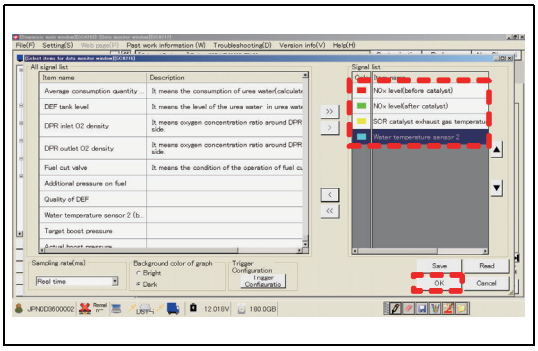

SAPH16F010301142

11. From the selection window on the left, select the following 4 items.
Click OK.

- NOx level (before catalyst)
- NOx level (after catalyst)
- NOx level (after catalyst)
- Water temperature sensor 2

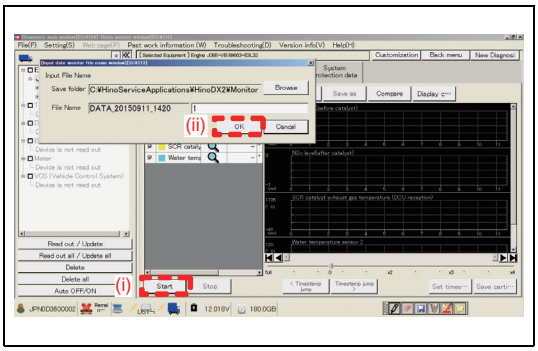


SAPH16F010301143

12. (i) Click [Start] to display the window to check the data storage destination.
(ii) Click [OK] to start data monitoring.

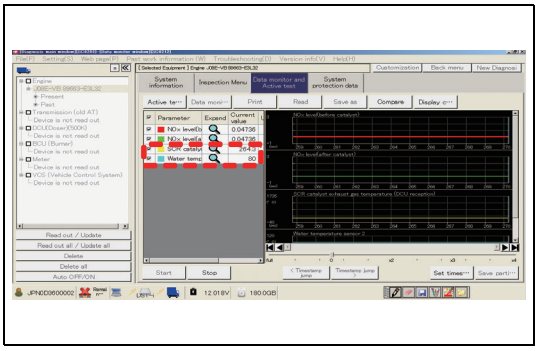

SAPH16F010301144

13. Start the engine.

14. Press the DPR manual regeneration switch of the vehicle.
Start regeneration.

**HINT**

**Since NOx sensor waveform is not detected until the exhaust gas temperature and coolant temperature reach the specified values or more, perform DPR regeneration to increase the exhaust gas temperature and coolant temperature.**

15. On the DX II data monitor, monitor the SCR catalyst temperature, coolant temperature and NOx levels before and after.

16. When the SCR catalyst temperature reaches 250 °C {482 °F} and coolant temperature reaches 70 °C {158 °F}, press the DPR switch (button) to stop the regeneration.

17. Following the determination manual, determine the quality of the sensor according to the NOx sensor waveform data on the monitor.
This is the end of the trouble shooting.

18. Turn the starter key OFF once to stop the engine. Turn it ON again.
19. After completing the trouble shooting, rewrite the soot volume to the original value.
    Select [Engine] as in the window on the left. Click the [Click] button.

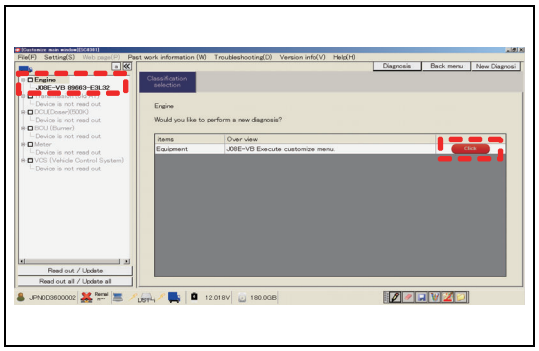

SAPH16F010301145

20. Rewrite the soot volume to the recorded original value.
    Refer to the window on the left.
    For the case of this window, the soot volume to write is [0.6].

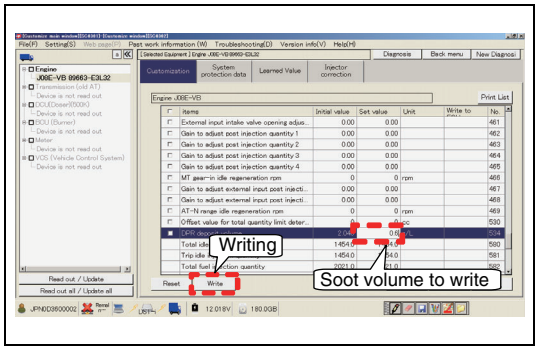


SAPH16F010301146

21. Check that the original soot volume has been written, and click [OK].
    Refer to the window on the left.

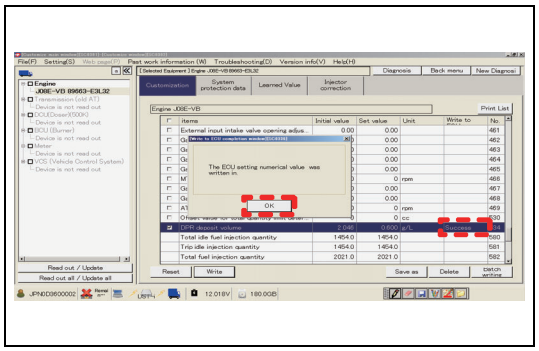

SAPH16F010301147

22. Select [System protection data] to check [Manual regeneration completion frequency]. Click [Reset]. Refer to the window on the left.

**NOTICE**

**Unless this memory reset is performed, the DTC of abnormal regeneration frequency would turn on.**

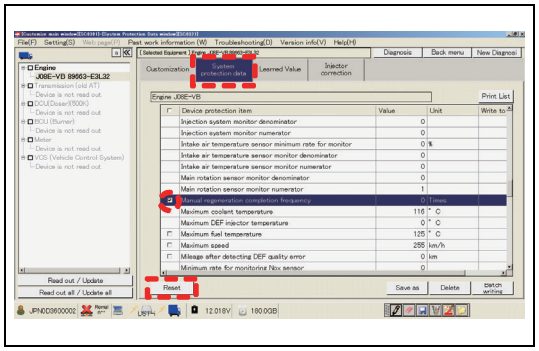

SAPH16F010301148

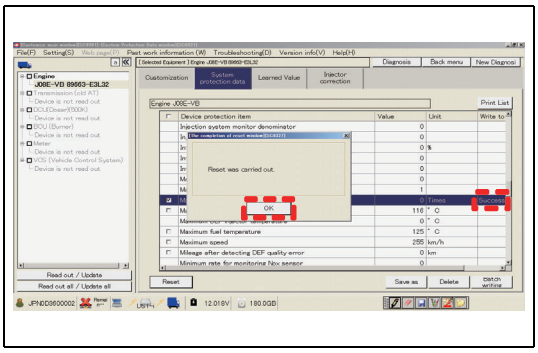


SAPH16F010301149

23. Check that the memory reset has been completed. Click [OK]. Refer to the window on the left.

**Was any failure found?**

**YES**

**Replace the NOx sensor 2 (SCR downstream) Perform "After-inspection work" of INFORMATION section.**

**NO**

**Go to step 6.**

## 6 Inspect the exhaust gas temperature sensor 4 (DPR inlet) connector

1. Check the connection of the exhaust gas temperature sensor 4 (DPR inlet) connector (Looseness and poor contact).

**Was any failure found?**

**YES**

**Connect securely, repair if needed.**
**Go to step 7.**

**NO**

**Go to step 7.**

## 7 Inspect the exhaust gas temperature sensor 4 (DPR inlet)

1. Check the installation of the exhaust gas temperature sensor 4 (DPR inlet).
2. Make sure there is no dirt or damage to the exhaust gas temperature sensor 4 (DPR inlet).

**Was any failure found?**

**YES**

**Clean the exhaust gas temperature sensor 4 (DPR inlet) and install it properly.**
**If damaged, replace the exhaust gas temperature sensor 4 (DPR inlet).**
**Go to step 8.**

**NO**

**Go to step 8.**

## 8 Inspect the exhaust gas temperature sensor 4 (DPR inlet) unit

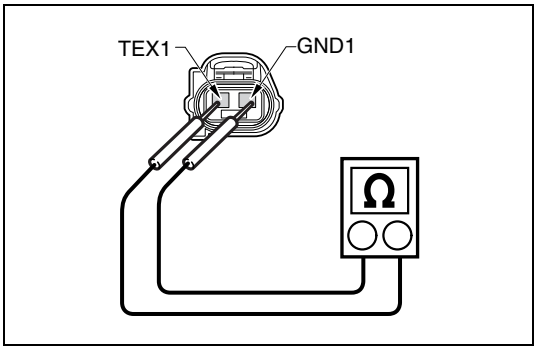


SAPH16F010301150

1. Set the starter switch to the "LOCK" position.
2. Disconnect the exhaust gas temperature sensor 4 (DPR inlet) connector.
3. Use the electrical tester to measure the resistance between the terminals of the exhaust gas temperature sensor 4 (DPR inlet).

| Measurement conditions | Tester connections | Standard values |
|---|---|---|
| Starter switch: LOCK | Exhaust gas temperature sensor 4 (DPR inlet) TEX1 – GND1 | 20 °C {68 °F}: 13.7 – 29.8 kΩ<br>50 °C {122 °F}: 7.13 – 13.7 kΩ<br>80 °C {176 °F}: 4.1 – 7.13 kΩ |

**Do the measurements meet the standard value?**

**YES**

**Go to step 9.**

**NO**

**Replace the exhaust gas temperature sensor 4 (DPR inlet).**
**Go to step 9.**

## 9 Inspect the sensor power supply

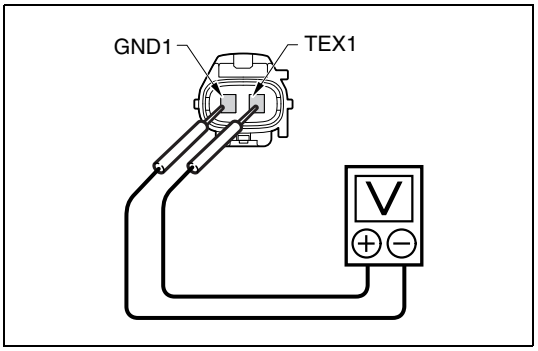


SAPH16F010301151

1. Set the starter switch to the "ON" position.
2. Use the electrical tester to measure the voltage between the terminals of the exhaust gas temperature sensor 4 (DPR inlet) vehicle-side connector.

| Measurement conditions | Tester connections | Standard values |
|---|---|---|
| Starter switch: ON | Exhaust gas temperature sensor 4 (DPR inlet) vehicle-side connector TEX1 – GND1 | 4.5 – 5.5 V |

**Do the measurements meet the standard value?**

| YES | NO |
|---|---|
| **Go to step 12.**<br>**If any failure was found at the step 6 - 8, perform "After-inspection work" of INFORMATION section.** | **Go to step 10.** |

| 10 | **Inspect for short-circuit of the exhaust gas temperature sensor 4 (DPR inlet) harness** |
|---|---|

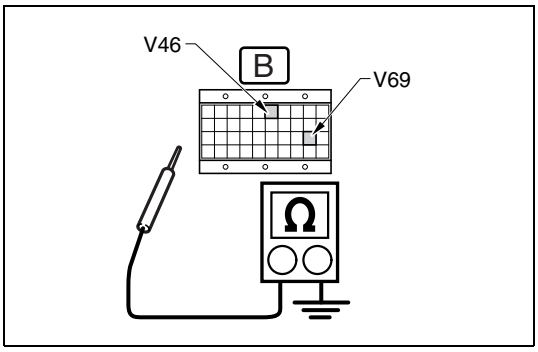

SAPH16F010301152

1. Set the starter switch to the "LOCK" position.
2. Connect the signal check harness to the engine ECU. (Do not connect harness to the ECU.)
3. Use the electrical tester to measure the resistance between the terminals of the engine ECU (signal check harness) and ground.

| Measurement conditions | Tester connections | Standard values |
|---|---|---|
| **Starter switch: LOCK** | **Engine ECU (signal check harness) AGD3(V46) – Ground**<br>**ET3+(V69) – Ground** | ∞ Ω |

**Do the measurements meet the standard value?**

| YES | NO |
|---|---|
| **Go to step 11.** | **Repair or replace the harness.**<br>**Go to step 11.** |

| 11 | Inspect disconnection of the exhaust gas temperature sensor 4 (DPR inlet) harness |
|---|---|

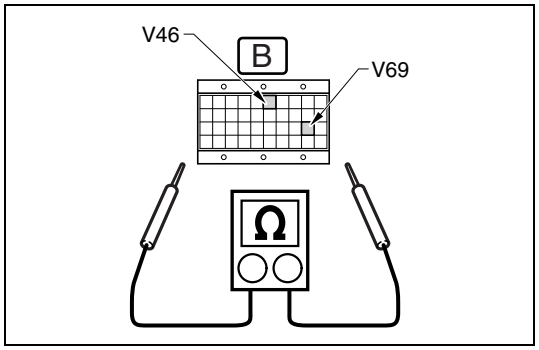

SAPH16F010301153

1. Connect the exhaust gas temperature sensor 4 (DPR inlet) connector.
2. Use the electrical tester to measure the resistance between the terminals of the engine ECU (signal check harness).

| Measurement conditions | Tester connections | Standard values |
|---|---|---|
| Starter switch: LOCK | Engine ECU (signal check harness) AGD3(V46) – ET3+(V69) | 20 °C {68 °F}: 13.7 – 29.8 kΩ<br>50 °C {122 °F}: 7.13 – 13.7 kΩ<br>80 °C {176 °F}: 4.1 – 7.13 kΩ |

**Do the measurements meet the standard value?**

**YES**

**Go to step 12.**
**If any failure was found at the step 6 - 10, perform "After-inspection work" of INFORMATION section.**

**NO**

**Repair or replace the harness.**
**Perform "After-inspection work" of INFORMATION section.**

| 12 | Inspect the exhaust gas temperature sensor (SCR inlet) connector |
|---|---|

1. Check the connection of the exhaust gas temperature sensor (SCR inlet) connector (Looseness and poor contact).

**Was any failure found?**

**YES**

**Connect securely, repair if needed.**
**Go to step 13.**

**NO**

**Go to step 13.**

| 13 | Inspect the exhaust gas temperature sensor (SCR inlet) |
|---|---|

1. Check the installation of the exhaust gas temperature sensor (SCR inlet).
2. Make sure there is no dirt or damage to the exhaust gas temperature sensor (SCR inlet).

**Was any failure found?**

**YES**

**Clean the exhaust gas temperature sensor (SCR inlet) and install it properly. If damaged, replace the exhaust gas temperature sensor (SCR inlet).**
**Go to step 14.**

**NO**

**Go to step 14.**

| 14 | Inspect the exhaust gas temperature sensor (SCR inlet) unit |
|---|---|

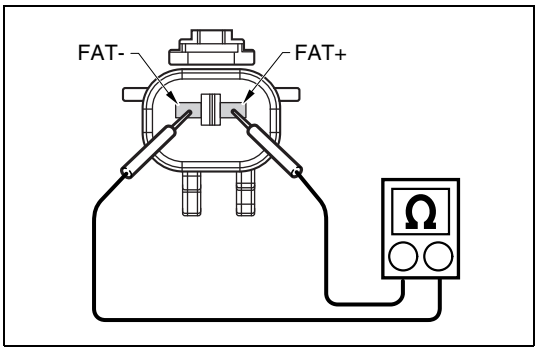

SAPH16F010301154

1. Set the starter switch to the "LOCK" position.
2. Disconnect the exhaust gas temperature sensor (SCR inlet) connector.
3. Use the electrical tester to measure the resistance between the terminals of the exhaust gas temperature sensor (SCR inlet).

| Measurement conditions | Tester connections | Standard values |
|---|---|---|
| **Starter switch: LOCK** | **Exhaust gas temperature sensor (SCR inlet) FAT+ – FAT-** | **20 °C {68 °F}: 220 Ω** |

**Do the measurements meet the standard value?**

**YES**

**Go to step 15.**

**NO**

**Replace the exhaust gas temperature sensor (SCR inlet).**
**Go to step 15.**

| 15 | Inspect for short-circuit in the exhaust gas temperature sensor (SCR inlet) harness |
|---|---|

1. Disconnect the DCU 86P connector.
2. Connect the signal check harness and use the electrical tester to measure the resistance between the terminals of the DCU 86P vehicle-side connector and the ground.

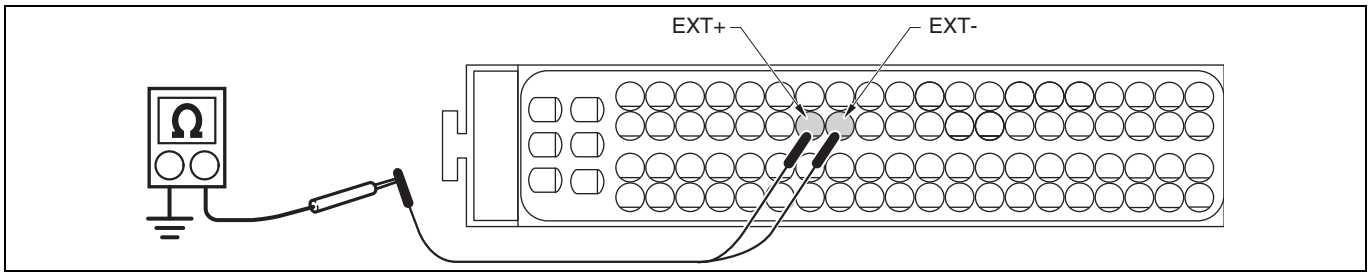


SAPH16F010301155

| Measurement conditions | Tester connections | Standard values |
|---|---|---|
| **Starter switch: LOCK** | **DCU 86P vehicle-side connector EXT+ – Ground EXT- – Ground** | ∞ Ω |

**Do the measurements meet the standard value?**

**YES**

**Go to step 16.**

**NO**

**Repair or replace the harness.**
**Go to step 16.**

| 16 | Inspect disconnection of the exhaust gas temperature sensor (SCR inlet) harness |
|---|---|

1. Connect the exhaust gas temperature sensor (SCR inlet) connector.
2. Connect the signal check harness and use the electrical tester to measure the resistance between the terminals of the DCU 86P vehicle-side connector.

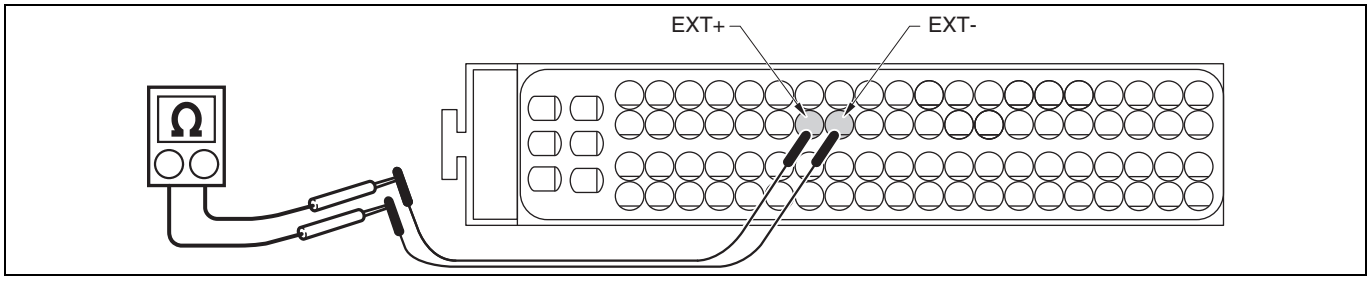


SAPH16F010301156

| Measurement conditions | Tester connections | Standard values |
|---|---|---|
| Starter switch: LOCK | DCU 86P vehicle-side connector EXT+ – EXT- | 20 °C {68 °F}: 220 Ω |

**Do the measurements meet the standard value?**

**YES**

**Go to step 17.**
**If any failure was found at the step 12 - 15, perform "After-inspection work" of INFORMATION section.**

**NO**

**Repair or replace the harness.**
**Perform "After-inspection work" of INFORMATION section.**

| 17 | Inspect the DEF injector [HINO DX II ] |
|---|---|

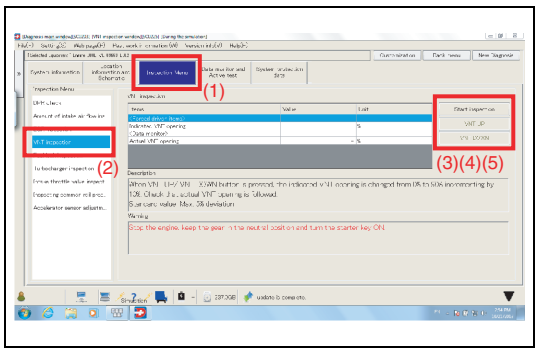


SAPH16F010301157

**NOTICE**
**Prepare a beaker or similar, plus a larger measuring vessel for measuring the DEF to be injected, before perform this inspection. (If the vessel is small, there is dispersion at the time of injection from the injector, and the measuring quantity decreases.)**

1. Set the starter switch to the "LOCK" position.
2. Remove the DEF injector from muffler.
3. Connect the vehicle to HINO DX II .
4. Set the starter switch to the "ON" position.
5. Select [DCU].
6. Select [Inspection Menu] and check the DEF injector actuation.
   <Inspection procedure>
   (1) Select [Inspection Menu].
   (2) Select [DEF solution addition test].
   (3) Perform additional tests as instructed on the HINO DX II screen. (Perform test patterns 1 – 3 and check the injection amount and spray condition.)

**Is operation normal?**

**YES**

**Go to step 18.**

**NO**

**Replace the DEF injector.**
**Perform "After-inspection work" of INFORMATION section.**

| 18 | Check the response delay of the EGR valve [HINO DX II ] |
|---|---|

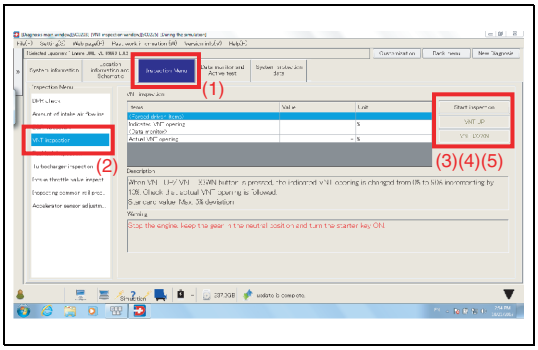


SAPH16F010301158

1. Select [Engine] on the screen of HINO DX II .

2. Check the time lag (following characteristics) of the target EGR valve opening and actual EGR valve opening by following procedure.

**⚠ CAUTION**
**Perform the inspection while the engine is stopped to avoid engine damages.**

<Inspection procedure>
(1) Select [Inspection Menu].
(2) Select [EGR inspection].
(3) Click [Start inspection].
(4) Click [EGR opening UP]:

- Check each step from 0 % – 90 % of the time lag (following characteristics) of the target EGR valve opening and actual EGR valve opening.
  (5) Click [EGR opening DOWN]:
- Check each step from 90 % – 0 % of the time lag (following characteristics) of the target EGR valve opening and actual EGR valve opening.

**HINT**
**In EGR openings from 0 % – 90 %, 1 step corresponds to a 10 % change.**

| Standard values |
|---|
| The response delay should be less than 5 seconds. |

**Do the measurements meet the standard value?**

| YES | NO |
|---|---|
| Go to step 19. | Replace the EGR valve.<br>Perform "After-inspection work" of INFORMATION section. |

| 19 | Inspect the EGR valve [HINO DX II ] |
|---|---|

1. Set the starter switch to the "LOCK" position.

2. Remove the EGR valve.

3. Set the starter switch to ON position and select [Engine] on the screen of HINO DX II .

4. Perform [EGR inspection] in the same way as step 18.
   Confirm the tracking properties of the EGR valve and make sure it closes tightly.

**Are tracking and tightness normal?**

YES

**Go to step 20.**

NO

**Replace the EGR valve.**
**Perform "After-inspection work" of INFORMATION section.**

| 20 | **Inspect the EGR cooler** |
|---|---|

1. Check the condition of the tube coming out of the outlet side of the EGR cooler.
2. Check if the EGR cooler tube is clogged.

**Is the tube clogged?**

YES

**Wash or replace the EGR cooler.**
**Perform "After-inspection work" of INFORMATION section.**

NO

**Go to step 21**

| 21 | **Inspect the air flow sensor connector** |
|---|---|

1. Check the connection of the air flow sensor (Looseness and poor contact).

**Was any failure found?**

YES

**Connect securely, repair if needed.**
**Go to step 22.**

NO

**Go to step 22.**

| 22 | Inspect the air flow sensor |
|---|---|

1. Check the installation of the air flow sensor.
2. Make sure there is no dirt or damage to the air flow sensor.

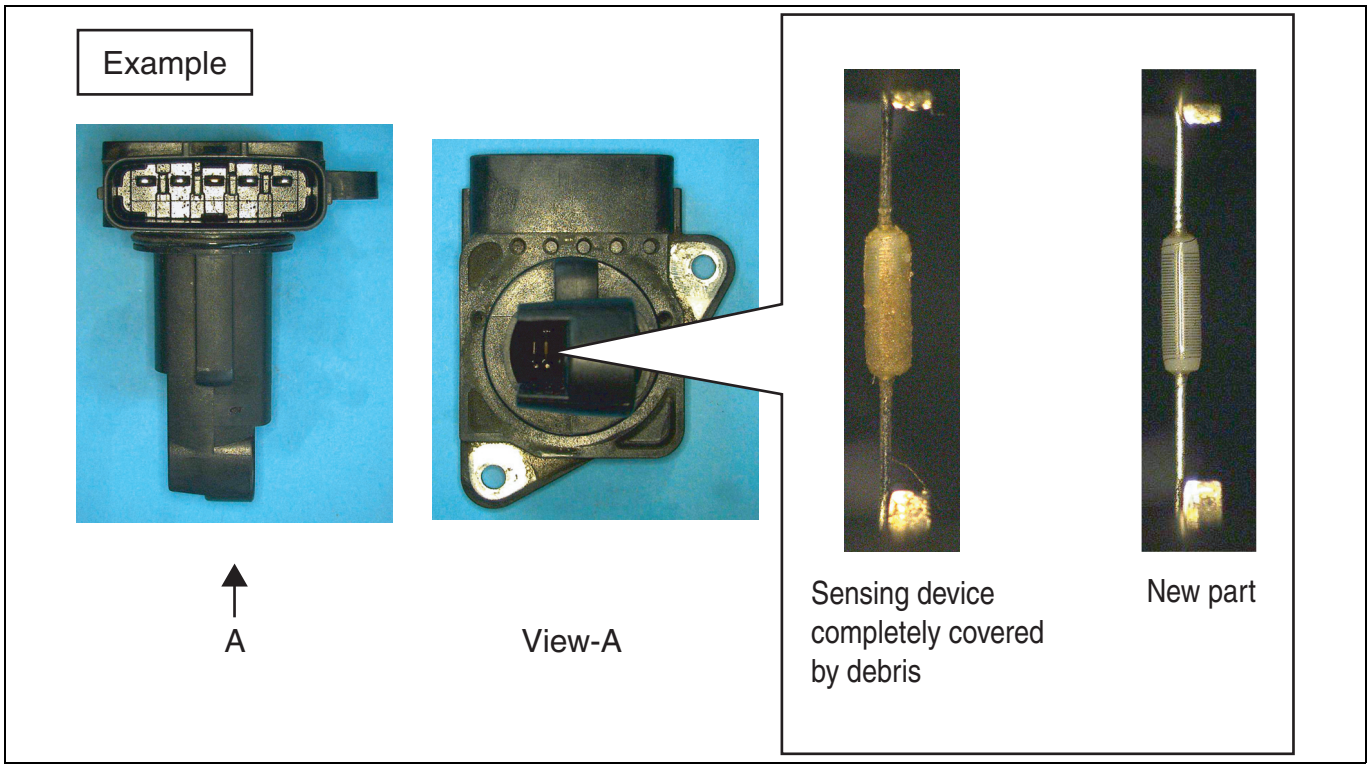


SAPH16F010301159

**Was any failure found?**

**YES**

**Go to step 23.**

**NO**

**Go to step 24.**

| 23 | Inspect air flow sensor [HINO DX II ] |
|---|---|

Prepare the new air flow sensor, and compare the air flow sensor characteristics between the sensor on the vehicle and new sensor by using HINO DX II .

1. Set the starter switch to the lock position and connect HINO DX II to the vehicle.
2. Reconnect the sensor to the vehicle.
3. Set the starter switch to ON position and select [Engine] on HINO DX II menu.
4. Select [Amount of intake air flow inspection] from [Inspection Menu] on HINO DX II .
5. Perform [Amount of intake air flow inspection] as instructed on the HINO DX II screen.
6. Perform the same inspection with the new sensor, and compare the characteristics between old and new.

| Standard values |
|---|
| **Performance error: less than 10 %** |

**Do the measurements meet the standard value?**

**YES**

**Go to step 24.**

**NO**

**Install the new air flow sensor.**
**Go to step 24.**

| 24 | Inspect for short-circuits in wire harness of air flow sensor |
|---|---|

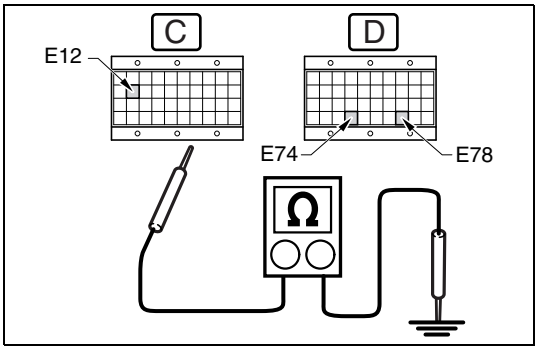

SAPH16F010301160

1. Set the starter switch to the "LOCK" position.
2. Disconnect the air flow sensor connector.
3. Connect the signal check harness to the engine ECU vehicle-side harness. (Do not connect harness to the ECU.)
4. Use the electrical tester to measure the resistance between the engine ECU (signal check harness) terminals and ground.

**HINT**
**Measure while shaking the harness.**

| Measurement conditions | Tester connections | Standard values |
|---|---|---|
| **Starter switch: LOCK** | **Engine ECU (signal check harness) AFVB(E12) – Ground AFSI(E74) – Ground AG4(E78) – Ground** | **∞ Ω** |

**Do the measurements meet the standard value?**

**YES**

**Go to step 25.**

**NO**

**Repair or replace the harness.**
**Go to step 25.**

| 25 | Inspect for disconnection in wire harness of air flow sensor |
|---|---|

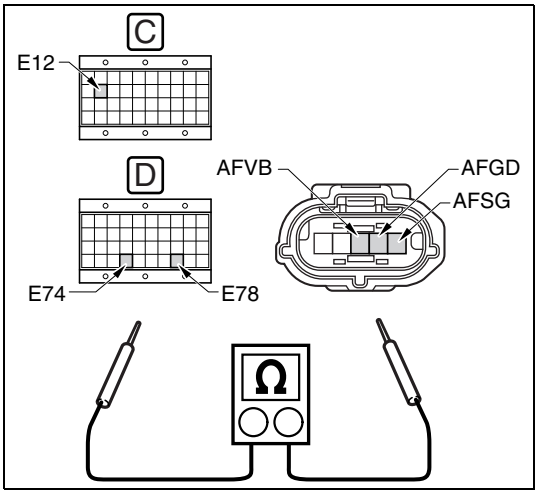

SAPH16F010301161

1. Use the electrical tester to measure the resistance between the engine ECU (signal check harness) terminal and the air flow sensor vehicle-side connector terminal.

**HINT**
**Measure while shaking the harness.**

| Measurement conditions | Tester connections | Standard values |
|---|---|---|
| **Starter switch: LOCK** | **Engine ECU (signal check harness) – airflow sensor vehicle-side connector AFVB(E12) – AFVB AFSI(E74) – AFSG AG4(E78) – AFGD** | **1 Ω or less** |

**Do the measurements meet the standard value?**

| YES | NO |
|---|---|
| **Go to step 26.** | **Repair or replace the harness.<br>Go to step 26.** |

| 26 | Inspect the air flow sensor [HINO DX II ] |
|---|---|

Prepare the new air flow sensor, and compare the air flow sensor characteristics between the sensor on the vehicle and new sensor by using HINO DX II .

1. Set the starter switch to the "LOCK" position and connect HINO DX II to the vehicle.
2. Set the starter switch to "ON" position and select [Engine] on HINO DX II menu.
3. Select [Amount of intake air flow inspection] from [Inspection Menu] on HINO DX II menu.
4. Perform [Amount of intake air flow inspection] as instructed on the HINO DX II screen.
5. Perform the same inspection with the new sensor, and compare the characteristics between old and new.

| Standard values |
|---|
| **Performance error: less than 10 %** |

**Do the measurements meet the standard value?**

| YES | NO |
|---|---|
| **Go to step 27.<br>If any failure was found at the step 21 - 25, perform "After-inspection work" of INFORMATION section.** | **Replace the air flow sensor.<br>Perform "After-inspection work" of INFORMATION section.** |

| 27 | Inspect the boost pressure sensor connector |
|---|---|

1. Check the connection of the boost pressure sensor connector (Looseness and poor contact).

**Was any failure found?**

YES

**Connect securely, repair if needed.**
**Go to step 28.**

NO

**Go to step 28.**

## 28 Inspect the boost pressure sensor

1. Check the installation of the boost pressure sensor.
2. Make sure there is no dirt or damage to the boost pressure sensor.
3. Make sure there is no dirt, damage or clogging in the pipes or hoses unit of the boost pressure sensor.

**Was any failure found?**

YES

**If dirt, clogging or damage was found in sensing unit, replace the boost pressure sensor.**
**Go to step 29.**

NO

**Go to step 29.**

## 29 Check the boost pressure sensor output signal [HINO DX II ]

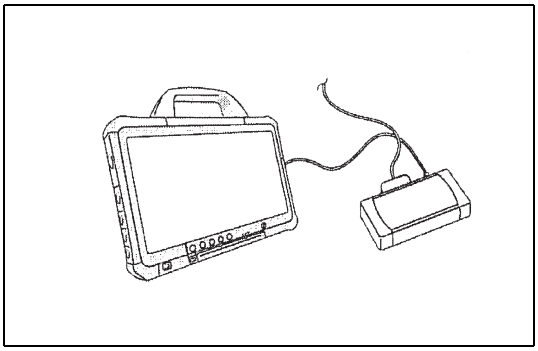

SAPH16F010301162

1. Set the starter switch to the "LOCK" position.
2. Connect the vehicle to HINO DX II .
3. Start the engine.
4. Select [Engine] from the menu.
5. Select [Actual boost pressure] from the [Data monitor Setting] menu.
6. Race the engine from idle to NMR and verify that the boost pressure output signal varies.

| Standard values |
|---|
| **There is no abnormal change in the sensor output signal. (The pressure sensor signal response changes according to the engine speed)** |

**Was there no abnormal change in the sensor output signal?**

YES

**Go to step 33.**
**If any failure was found at the step 27, 28, perform "After-inspection work" of INFORMATION section.**

NO

**Replace the boost pressure sensor.**
**Perform "After-inspection work" of INFORMATION section.**
**Go to step 30.**

## 30 Inspect for short-circuits in wire harness of boost pressure sensor

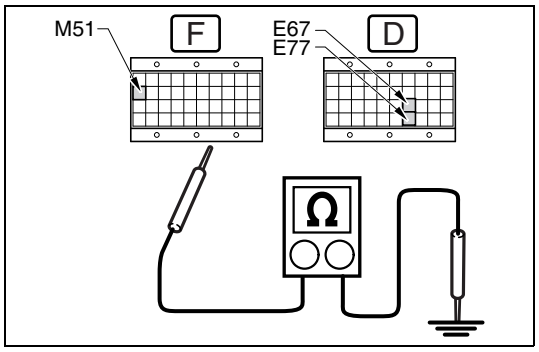

SAPH16F010301163

1. Set the starter switch to the "LOCK" position.
2. Disconnect the boost pressure sensor connector.
3. Connect the signal check harness to the engine ECU vehicle-side harness. (Do not connect harness to the ECU.)
4. Use the electrical tester to measure the resistance between each terminal in the engine ECU (signal check harness) and ground.

| Measurement conditions | Tester connections | Standard values |
|---|---|---|
| Starter switch: LOCK | Engine ECU (signal check harness) AV3(M51) – Ground<br>PIM(E67) – Ground<br>AG3(E77) – Ground | ∞ Ω |

**Do the measurements meet the standard value?**

YES

**Go to step 31.**

NO

**Repair or replace the harness.**
**Go to step 31.**

| 31 | Inspect for disconnection in wire harness of boost pressure sensor |
|---|---|

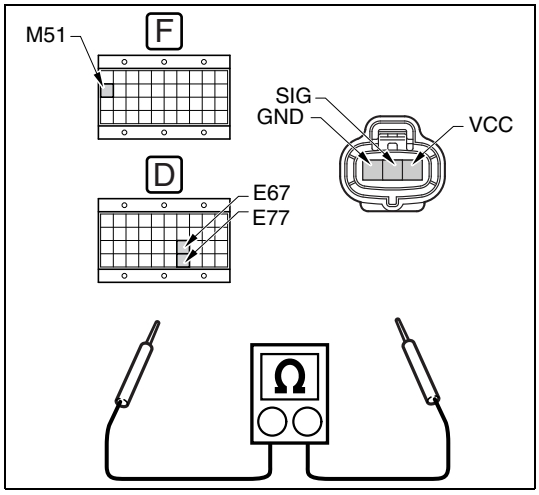


SAPH16F010301164

1. Use the electrical tester to measure the resistance between the engine ECU (signal check harness) and boost pressure sensor vehicle-side connector terminals.

| Measurement conditions | Tester connections | Standard values |
|---|---|---|
| **Starter switch: LOCK** | **Engine ECU (signal check harness) – boost pressure sensor vehicle-side connector AV3(M51) – VCC PIM(E67) – SIG AG3(E77) – GND** | **1 Ω** |

**Do the measurements meet the standard value?**

**YES**

**Go to step 32.**

**NO**

**Repair or replace the harness.**
**Go to step 32.**

| 32 | Inspect the boost pressure sensor power supply |
|---|---|

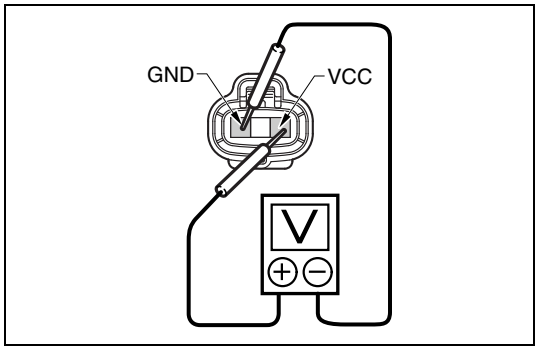

SAPH16F010301165

1. Connect the engine ECU vehicle-side harness to the engine ECU.
2. Set the starter switch to the "ON" position.
3. Use the electrical tester to measure the voltage between the terminals of the boost pressure sensor vehicle-side connector.

| Measurement conditions | Tester connections | Standard values |
|---|---|---|
| Starter switch: ON | Boost pressure sensor vehicle-side connector VCC – GND | 4.5 – 5.5 V |

**Do the measurements meet the standard value?**

**YES**

**Go to step 33.**
**If any failure was found at the step 27 - 31, perform "After-inspection work" of INFORMATION section.**

**NO**

**Replace the engine ECU.**
**Perform "After-inspection work" of INFORMATION section.**

| 33 | Inspect the intake air temperature sensor (intake manifold) connector |
|---|---|

1. Check the connection of the intake air temperature sensor (intake manifold) connector (Looseness and poor contact).

**Was any failure found?**

**YES**

**Connect securely, repair if needed.**
**Go to step 34.**

**NO**

**Go to step 34.**

| 34 | Inspect the intake air temperature sensor (intake manifold) |
|---|---|

1. Check the installation of the intake air temperature sensor (intake manifold).
2. Make sure there is no dirt or damage to the intake air temperature sensor (intake manifold).

**Was any failure found?**

| YES | NO |
|---|---|
| **Remove all contaminants and clogging. Replace if damaged. Go to step 35.** | **Go to step 35.** |

## 35 Inspect the intake air temperature sensor (intake manifold) unit

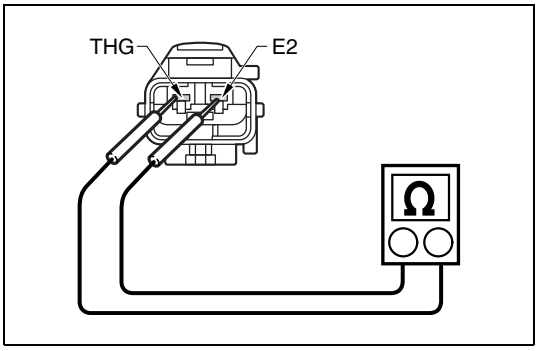

SAPH16F010301166

1. Set the starter switch to the "LOCK" position.
2. Disconnect the intake air temperature sensor (intake manifold) connector.
3. Use the electrical tester to measure the resistance between the terminals of the intake air temperature sensor (intake manifold).

| Measurement conditions | Tester connections | Standard values |
|---|---|---|
| **Starter switch: LOCK** | **Intake air temperature sensor (intake manifold) THG – E2** | **20 °C {68 °F}: 7.336 – 5.794 kΩ 50 °C {122 °F}: 2.435 – 1.994 kΩ** |

**Do the measurements meet the standard value?**

| YES | NO |
|---|---|
| **Go to step 36.** | **Replace the intake air temperature sensor (intake manifold). Go to step 36.** |

## 36 Inspect the sensor power supply

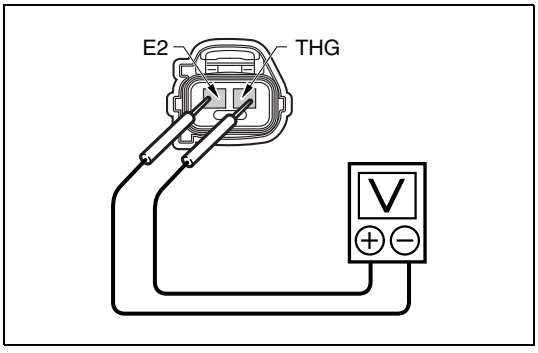

SAPH16F010301167

1. Set the starter switch to the "ON" position.
2. Use the electrical tester to measure the voltage between the terminals of the intake air temperature sensor (intake manifold) vehicle-side connector.

| Measurement conditions | Tester connections | Standard values |
|---|---|---|
| **Starter switch: ON** | **Intake air temperature sensor (intake manifold) vehicle-side connector THG – E2** | **4.5 – 5.5 V** |

**Do the measurements meet the standard value?**

YES

**Go to step 39.**
**If any failure was found at the step 33 - 35, perform "After-inspection work" of INFORMATION section.**

NO

**Go to step 37.**

## 37 Inspect for short-circuit of the intake air temperature sensor (intake manifold) harness

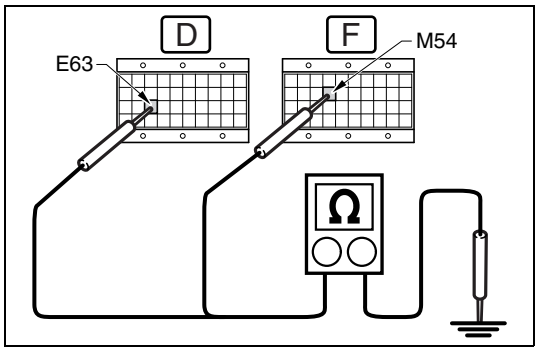

SAPH16F010301168

1. Set the starter switch to the "LOCK" position.
2. Connect the signal check harness to the engine ECU. (Do not connect the harness to the ECU.)
3. Use the electrical tester to measure the resistance between the terminals of the engine ECU (signal check harness) and ground.

| Measurement conditions | Tester connections | Standard values |
|---|---|---|
| Starter switch: LOCK | Engine ECU (signal check harness) ATI+(E63) – Ground<br>AG6(M54) – Ground | ∞ Ω |

**Do the measurements meet the standard value?**

YES

**Go to step 38.**

NO

**Repair or replace the harness.**
**Go to step 38.**

## 38 Inspect disconnection of the intake air temperature sensor (intake manifold) harness

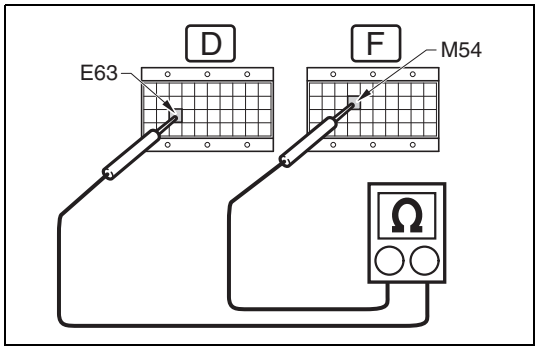

SAPH16F010301169

1. Connect the intake air temperature sensor (intake manifold) connector.
2. Use the electrical tester to measure the resistance between the terminals of the engine ECU (signal check harness).

| Measurement conditions | Tester connections | Standard values |
|---|---|---|
| Starter switch: LOCK | Engine ECU (signal check harness) ATI+(E63) – AG6(M54) | 20 °C {68 °F}: 7.336 – 5.794 kΩ<br>50 °C {122 °F}: 2.435 – 1.994 kΩ |

**Do the measurements meet the standard value?**

| YES | NO |
|---|---|
| **Go to step 39.**<br>**If any failure was found at the step 33 - 37, perform "After-inspection work" of INFORMATION section.** | **Repair or replace the harness.**<br>**Perform "After-inspection work" of INFORMATION section.** |

| 39 | Inspect the engine coolant temperature sensor 1 connector |
|---|---|

1. Check the connection of the engine coolant temperature sensor 1 connector (Looseness and poor contact).

**Was any failure found?**

| YES | NO |
|---|---|
| **Connect securely, repair if needed.**<br>**Go to step 40.** | **Go to step 40.** |

| 40 | Inspect the engine coolant temperature sensor 1 |
|---|---|

1. Check the installation of the engine coolant temperature sensor 1.
2. Make sure there is no dirt or damage to the engine coolant temperature sensor 1.

**Was any failure found?**

| YES | NO |
|---|---|
| **Clean the engine coolant temperature sensor 1 and install it properly.**<br>**If damaged, replace the engine coolant temperature sensor 1.**<br>**Go to step 41.** | **Go to step 41.** |

| 41 | Inspect the engine coolant temperature sensor 1 unit |
|---|---|

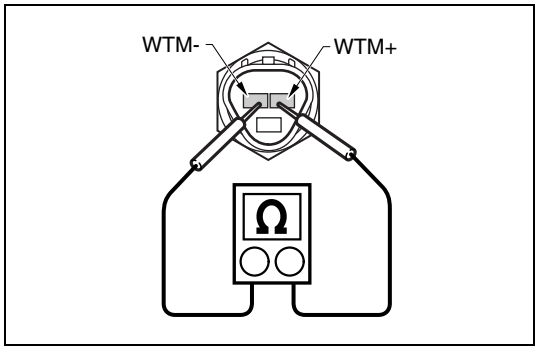

SAPH16F010301170

1. Set the starter switch to the "LOCK" position.
2. Disconnect the engine coolant temperature sensor 1 connector.
3. Use the electrical tester to measure the resistance between the terminals of the engine coolant temperature sensor 1.

| Measurement conditions | Tester connections | Standard values |
|---|---|---|
| Starter switch: LOCK | Engine coolant temperature sensor 1 WTM+ – WTM- | 20 °C {68 °F}: 2.59 – 2.32 kΩ 80 °C {176 °F}: 0.326 – 0.310 kΩ |

**Do the measurements meet the standard value?**

**YES**

**Go to step 42.**

**NO**

**Replace the engine coolant temperature sensor 1.**
**Go to step 42.**

| 42 | Inspect the engine coolant temperature sensor 1 power supply |
|---|---|

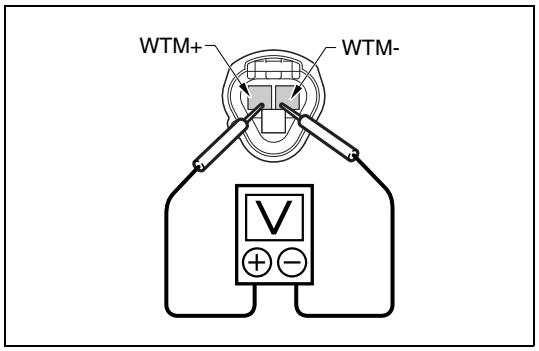

SAPH16F010301171

1. Set the starter switch to the "ON" position.
2. Use the electrical tester to measure the voltage between the terminals of the engine coolant temperature sensor 1 vehicle-side connector.

| Measurement conditions | Tester connections | Standard values |
|---|---|---|
| Starter switch: ON | Engine coolant temperature sensor 1 vehicle-side connector WTM+ – WTM- | 4.5 – 5.5 V |

**Do the measurements meet the standard value?**

**YES**

**Go to step 45.**
**If any failure was found at the step 39 - 41, perform "After-inspection work" of INFORMATION section.**

**NO**

**Go to step 43.**

| 43 | Inspect for short-circuit of the engine coolant temperature sensor 1 harness |
|---|---|

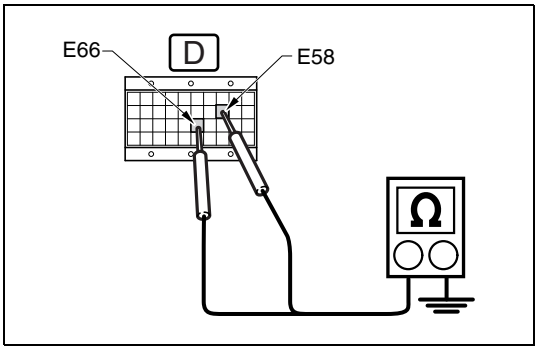

SAPH16F010301172

1. Set the starter switch to the "LOCK" position.
2. Connect the signal check harness to the engine ECU. (Do not connect harness to the engine ECU.)
3. Use the electrical tester to measure the resistance between the terminals of the engine ECU (signal check harness) and ground.

| Measurement conditions | Tester connections | Standard values |
|---|---|---|
| Starter switch: LOCK | Engine ECU (signal check harness) THW+(E66) – Ground AG5(E58) – Ground | ∞ Ω |

**Do the measurements meet the standard value?**

**YES**

**Go to step 44.**

**NO**

**Repair or replace the harness.**
**Go to step 44.**

| 44 | Inspect disconnection of the engine coolant temperature sensor 1 harness |
|---|---|

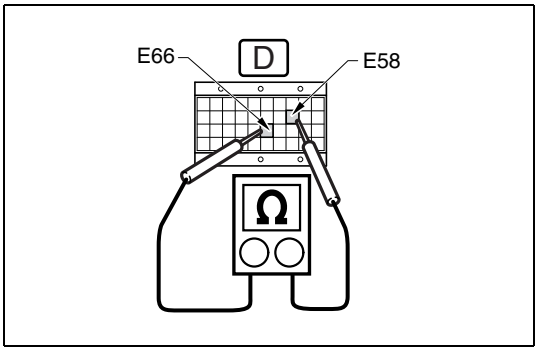

SAPH16F010301173

1. Connect the engine coolant temperature sensor 1 connector.
2. Use the electrical tester to measure the resistance between the terminals of the engine ECU (signal check harness).

| Measurement conditions | Tester connections | Standard values |
|---|---|---|
| Starter switch: LOCK | Engine ECU (signal check harness) THW+(E66) – AG5(E58) | 20 °C {68 °F}: 2.59 – 2.32 kΩ 80 °C {176 °F}: 0.326 – 0.310 kΩ |

**Do the measurements meet the standard value?**

**YES**

**Go to step 45.**
**If any failure was found at the step 39 - 43, perform "After-inspection work" of INFORMATION section.**

**NO**

**Repair or replace the harness.**
**Perform "After-inspection work" of INFORMATION section.**

| 45 | Inspect the engine coolant temperature sensor 2 connector |
|---|---|

1. Check the connection of the engine coolant temperature sensor 2 connector (Looseness and poor contact).

**Was any failure found?**

**YES**

**Connect securely, repair if needed.**
**Go to step 46.**

**NO**

**Go to step 46.**

| 46 | Inspect the engine coolant temperature sensor 2 |
|---|---|

1. Check the installation of the engine coolant temperature sensor 2.
2. Make sure there is no dirt or damage to the engine coolant temperature sensor 2.

**Was any failure found?**

**YES**

**Clean the engine coolant temperature sensor 2 and install it properly.**
**If damaged, replace the engine coolant temperature sensor 2.**
**Go to step 47.**

**NO**

**Go to step 47.**

| 47 | Inspect the engine coolant temperature sensor 2 unit |
|---|---|

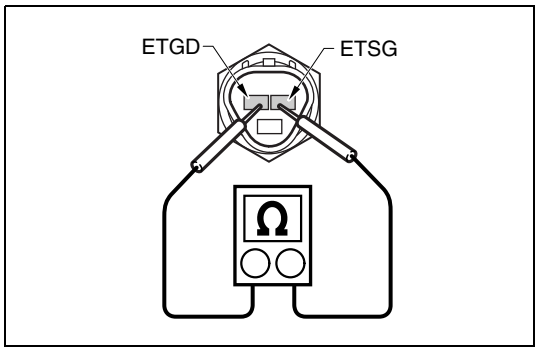


SAPH16F010301174

1. Set the starter switch to the "LOCK" position.
2. Disconnect the engine coolant temperature sensor 2 connector.
3. Use the electrical tester to measure the resistance between the terminals of the engine coolant temperature sensor 2.

| Measurement conditions | Tester connections | Standard values |
|---|---|---|
| Starter switch: LOCK] | Engine coolant temperature sensor 2<br>ETSG – ETGD | 20 °C {68 °F}:<br>2.59 – 2.32 kΩ<br>80 °C {176 °F}:<br>0.326 – 0.310 kΩ |

**Do the measurements meet the standard value?**

| YES | NO |
|---|---|
| **Go to step 48.** | **Replace the engine coolant temperature sensor 2.**<br>**Go to step 48.** |

| 48 | Inspect the engine coolant temperature sensor 2 power supply |
|---|---|

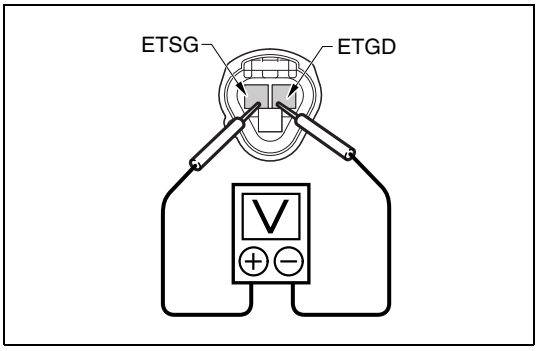

SAPH16F010301175

1. Set the starter switch to the "ON" position.
2. Use the electrical tester to measure the voltage between the terminals of the engine coolant temperature sensor 2 vehicle-side connector.

| Measurement conditions | Tester connections | Standard values |
|---|---|---|
| **Starter switch: ON** | **Engine coolant temperature sensor 2 vehicle-side connector ETSG – ETGD** | **4.5 – 5.5 V** |

**Do the measurements meet the standard value?**

| YES | NO |
|---|---|
| **Go to step 51.**<br>**If any failure was found at the step 45 - 47, perform "After-inspection work" of INFORMATION section.** | **Go to step 49.** |

| 49 | Inspect for short-circuit of the engine coolant temperature sensor 2 harness |
|---|---|

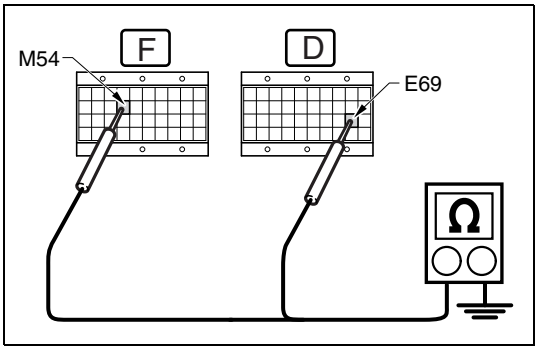

SAPH16F010301176

1. Set the starter switch to the "LOCK" position.
2. Connect the signal check harness to the engine ECU. (Do not connect harness to the engine ECU.)
3. Use the electrical tester to measure the resistance between the terminals of the engine ECU (signal check harness) and ground.

| Measurement conditions | Tester connections | Standard values |
|---|---|---|
| **Starter switch: LOCK** | **Engine ECU (signal check harness) THW2(E69) – Ground**<br>**AG6(M54) – Ground** | **∞ Ω** |

**Do the measurements meet the standard value?**

**YES**

**Go to step 50.**

**NO**

**Repair or replace the harness.**
**Go to step 50.**

## 50 Inspect disconnection of the engine coolant temperature sensor 2 harness

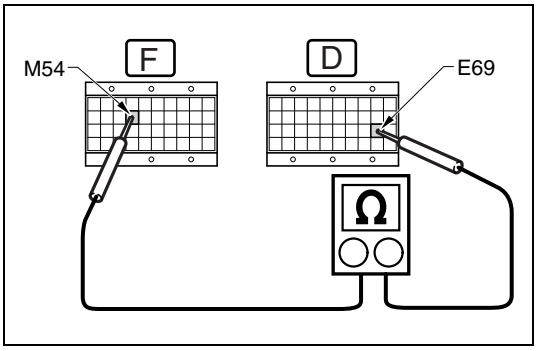


SAPH16F010301177

1. Connect the engine coolant temperature sensor 2 connector.
2. Use the electrical tester to measure the resistance between the terminals of the engine ECU (signal check harness).

| Measurement conditions | Tester connections | Standard values |
|---|---|---|
| Starter switch: LOCK | Engine ECU (signal check harness) THW2(E69) – AG6(M54) | 20 °C {68 °F}: 2.59 – 2.32 kΩ<br>80 °C {176 °F}: 0.326 – 0.310 kΩ |

**Do the measurements meet the standard value?**

**YES**

**Go to step 51.**
**If any failure was found at the step 45 - 49, perform "After-inspection work" of INFORMATION section.**

**NO**

**Repair or replace the harness.**
**Perform "After-inspection work" of INFORMATION section.**

## 51 Check the DTC detected (Engine ECU) [HINO DX II ]

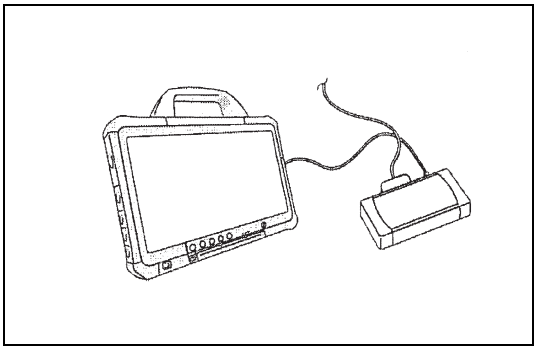

SAPH16F010301178

1. Replace the NOx sensor1 (SCR upstream) and NOx sensor 2 (SCR downstream).
2. Perform "After-inspection work" of INFORMATION section.
3. Stop the engine and set the starter switch to the "LOCK" position.
4. Connect the vehicle to HINO DX II .
5. Set the starter switch to the "ON" position.
6. Select [Engine] and check if P229F has been detected.

**Has DTC P229F been detected?**

**YES**

**Replace the engine ECU.**
**Perform "After-inspection work" of INFORMATION section.**

**NO**

**Procedure completed.**
**Perform "After-inspection work" of INFORMATION section.**

# DTC: P22D3

EN01H16F01030F03001169

## P22D3: Nozzle stuck (VNT stick failure)

INFORMATION

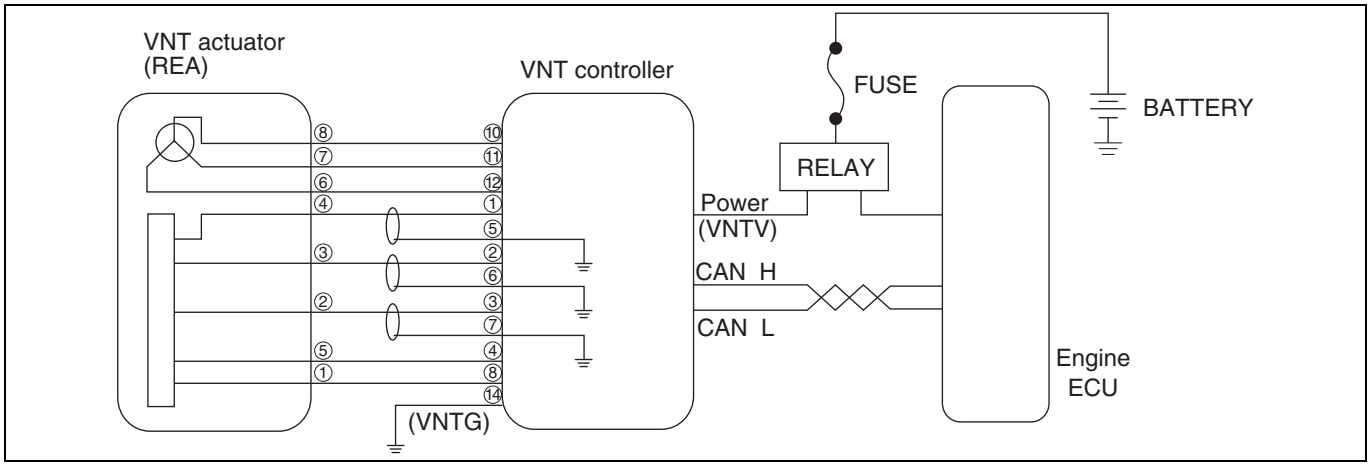


SAPH16F010301179

**1. Technical description**

- The VNT actuator steplessly operates the nozzle via the REA (Rotary Electric Actuator) and controls turbine speed and boost pressure.
- The VNT actuator (REA) has a position sensor and constantly monitors the target opening and the actual opening.
- Wiping operation is carried out when the engine is stopped and the soot, oil, and other impurities accumulated in the vane working range are removed. Also, the turbocharger mechanical working range is checked for trouble.

**2. DTC set condition**

(1) DTC detection condition

- While the engine is in operation: Always
- While the engine is stopped: During wiping operation

(2) Judgment criteria

| Item | Details (Reference) |
|---|---|
| 1. Stuck nozzle (position control failure) | When motor drive load is 95 % or more for 3 seconds continuously and restoration operation fails 5 times. |

**3. Reset condition**

- After normal operation is restored and the starter switch is turned OFF.

**4. Indication, warning or system control regulation when the DTC is set.**

- MIL: ON
- SVS light: OFF
- Engine output is restricted.
- Cruise control function is not available.
- Auxiliary brake function is not available.

**5. Symptoms on the vehicle when the DTC is set**

**<Symptoms on the vehicle due to backup control (fail safe function)>**

- Engine output is insufficient.
- Cruise control does not work.
- Auxiliary brake does not work.

**<Symptoms on the vehicle due to malfunction>**

- –

**6. Pre-inspection work**

- Check that the battery voltage is in the normal range.

**7. After-inspection work**

- Clear all past DTCs.
- Check that no DTC is detected after test drive.

**8. Estimated failure factors**

- Stuck nozzle
- Stuck external link

## INSPECTION PROCEDURE: P22D3

| 1 | Check the DTC detected 1 (Engine ECU) [HINO DX II ] |
|---|---|

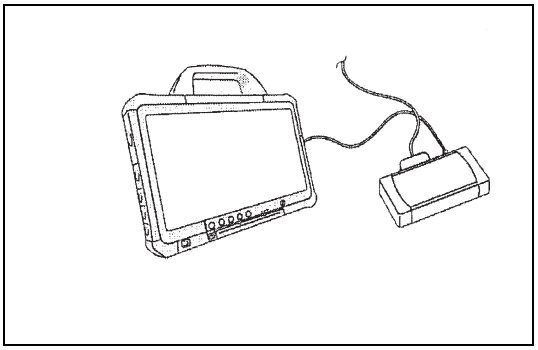

SAPH16F010301180

1. Connect the vehicle to HINO DX II .
2. Set the starter switch to the "ON" position.
3. Select [Engine] and check if P22D3 (for example, U010C) has been detected.

**Has a DTC other than P22D3 been detected?**

**YES**

**Go to the diagnostic procedure of a related DTC.**
**After the repair, go to step 2.**

**NO**

**Go to step 3.**

| 2 | Check the DTC detected 2 (Engine ECU) [HINO DX II ] |
|---|---|

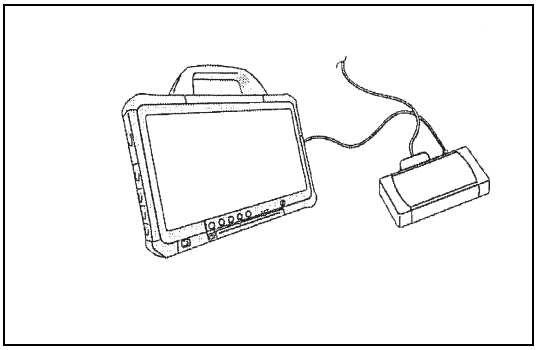

SAPH16F010301181

1. Set the starter switch to the "ON" position.
2. Select [Engine] and check if P22D3 has been detected.

**Has DTC P22D3 been detected?**

**YES**

**Go to step 3.**

**NO**

**Procedure completed.**
**Perform "After-inspection work" of INFORMATION section.**

| 3 | Check the response delay of the VNT controller [HINO DX II ] |
|---|---|

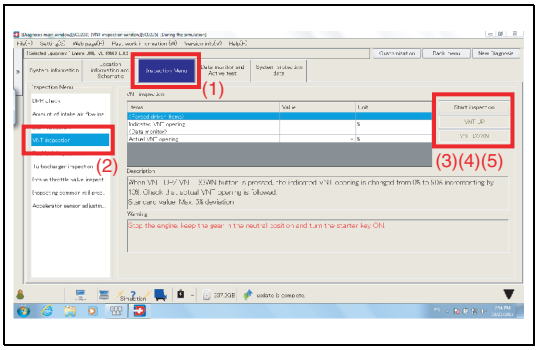


SAPH16F010301182

1. Select [Inspection Menu] from the menu, then inspect the response delay at the Target VNT position and Actual VNT position.

**⚠ CAUTION**
**Perform the inspection while the engine is stopped to avoid damages.**

<Inspection procedure>
(1) Select [Inspection Menu].
(2) Select [VNT inspection].
(3) Click [Start inspection].
(4) Select [VNT UP]:
• Inspect the response delay at each step of the Target VNT position and Actual VNT position from 0 to 90 %.
(5) Select [VNT DOWN]:
• Inspect the response delay at each step of the Target VNT position and Actual VNT position from 90 to 0 %.

**HINT**
**The VNT opening position changes of around 10 % per step between 0 – 90 %.**

| Standard values |
|---|
| **From the Target VNT position to the Actual VNT position, the response delay should be within 3 seconds.** |

**Do the measurements meet the standard value?**

**YES**

**Procedure completed.**
**Perform "After-inspection work" of INFORMATION section.**

**NO**

**Replace the turbocharger.**
**Perform "After-inspection work" of INFORMATION section.**

# DTC: P240F

EN01H16F01030F03001170

## P240F: EGR flow slow response

INFORMATION

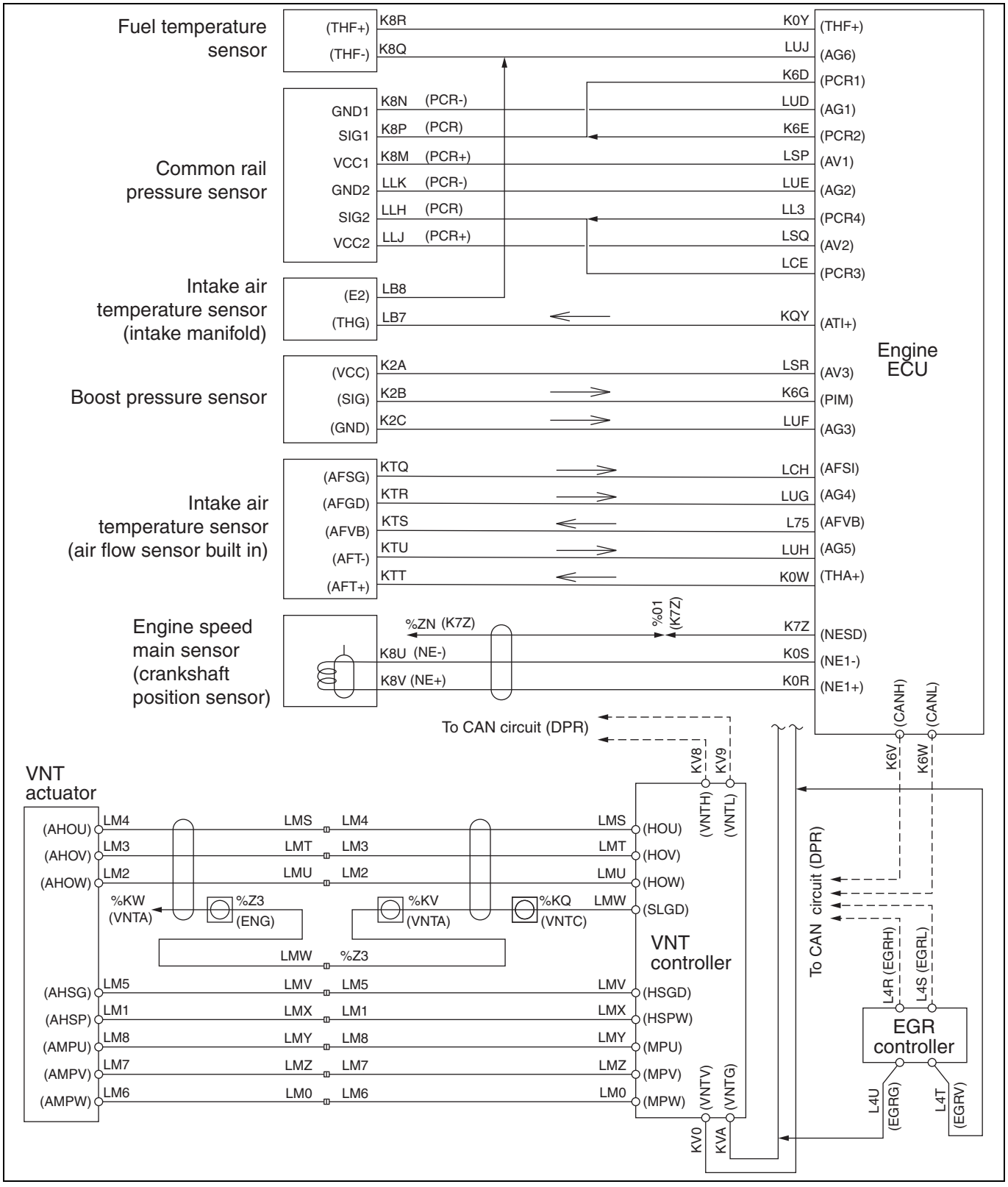


SAPH16F010301183

**1. Technical description**

- EGR valve is a butterfly type.
- EGR valve opening is controlled by engine speed and amount of intake air.
- EGR valve opening is adjusted by engine ECU and CAN communication.
- EGR valve will not operate when engine coolant temperature is low (≤ 40 °C {104 °F}).
- Engine ECU calculates the actual EGR quantity based on information from the boost pressure sensor, engine speed sensor, intake air temperature sensor (intake manifold), and air flow sensor.
- Engine ECU compares the actual EGR quantity and the theoretical EGR quantity stored in the ECU memory.

**<Description of malfunction>**

- EGR valve response delay is detected.

**2. DTC set condition**

(1) DTC detection condition

- Battery voltage is in the range of 10 V to 16 V.
- There is no disconnection in harness connected to EGR valve.
- Engine speed is between 1,000 and 2,500 r/min 1sec.
- Fuel injection quantity is 0 $mm^3$/st. cyl.
- Engine speed fluctuation is < 313 r/min/sec
- Engine coolant temperature is ≥ 60 °C {140 °F}.
- Atmospheric pressure is ≥ 75 kPa {10.8 psi}.
- Above conditions continue for at least 8 seconds.

(2) Judgment criteria

- When the sum of the differences between the theoretical EGR quantity and actual EGR quantity is equal to or greater than the threshold value.
- Above criterion is determined from the boost pressure, intake manifold temperature, air intake quantity, fuel injection rate, and engine speed.

**3. Reset condition**

- After normal operation is restored and the starter switch is on the "LOCK" position.

**4. Indication, warning or system control regulation when the DTC is set.**

- MIL: ON
- SVS light: OFF

**5. Symptoms on the vehicle when the DTC is set**

**<Symptoms on the vehicle due to backup control (fail safe function)>**

- –

**<Symptoms on the vehicle due to malfunction>**

- Faulty engine revving (engine hesitation)
- Insufficient output or engine stall because of DPR clogging due to faulty catalyst regeneration

**6. Pre-inspection work**

- Check that the battery voltage is in the normal range.

**7. After-inspection work**

- Clear all past DTCs.
- Check that no DTC is detected after test drive.

**8. Estimated failure factors**

- Intake air temperature sensor (intake manifold) malfunction
- Air flow sensor malfunction
- Boost pressure sensor malfunction
- Injector malfunction
- EGR valve malfunction
- Clogged air intake system
- VNT controller malfunction

## INSPECTION PROCEDURE: P240F

| 1 | Check the response delay of the EGR valve [HINO DX II ] |
|---|---|

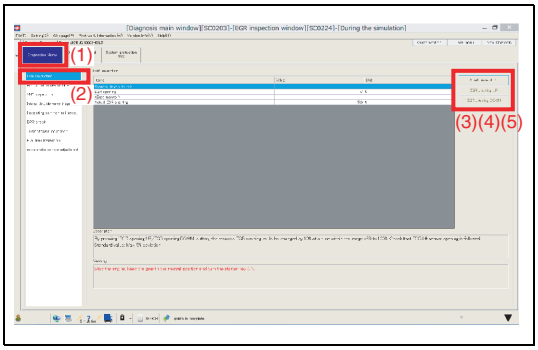


SAPH16F010301184

1. Set the starter switch to the "LOCK" position.
2. Connect the vehicle to HINO DX II .
3. Set the starter switch to the "ON" position.
4. Select [Inspection Menu] on the HINO DX II screen and check the time lag (following characteristics) of the target EGR valve opening and actual EGR valve opening.

**⚠ CAUTION**
**Perform the inspection while the engine is stopped to avoid engine damages.**

<Inspection procedure>
(1) Select [Inspection Menu].
(2) Select [EGR inspection].
(3) Click [Start inspection].
(4) Click [EGR opening UP]:
• Check each step from 0 % – 100 % of the time lag (following characteristics) of the target EGR valve opening and actual EGR valve opening.
(5) Click [EGR opening DOWN]:
• Check each step from 100 % – 0 % of the time lag (following characteristics) of the target EGR valve opening and actual EGR valve opening.

**HINT**
**In EGR openings from 0 % – 100 %, 1 step corresponds to a 10 % change.**

| Standard values |
|---|
| The response delay should be less than 5 seconds. |

**Do the measurements meet the standard value?**

**YES**

**Go to step 2.**

**NO**

**Replace the EGR valve.**
**Perform "After-inspection work" of INFORMATION section.**

## 2 Check the response delay of the VNT controller [HINO DX II ]

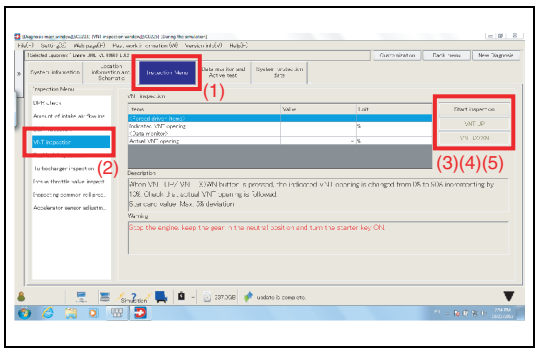


SAPH16F010301185

1. Select [Inspection Menu]_[VNT inspection] from the menu, and inspect the response delay at the Target VNT position and Actual VNT position.

**⚠ CAUTION**
**Perform the inspection while the engine is stopped to avoid engine damages.**

<Inspection procedure>
(1) Select [Inspection Menu].
(2) Select [VNT inspection].
(3) Click [Start inspection].
(4) Click [VNT UP].
• Inspect the response delay at each step of the Target VNT position and Actual VNT position from 0 to 90 %.
(5) Click [VNT DOWN].
• Inspect the response delay at each step of the Target VNT position and Actual VNT position from 90 to 0 %.

**HINT**
**The VNT opening position changes of 10 % per step between 0 – 90 %.**

| Standard values |
|---|
| The response delay should be less than 3 seconds. |

**Do the measurements meet the standard value?**

**YES**

**Go to step 3.**

**NO**

**Replace the turbocharger.**
**Perform "After-inspection work" of INFORMATION section.**

## 3 Inspect the air cleaner element

1. Check there is no dirt, damage or clogging in the air cleaner element.

2. Make sure the element is a Hino genuine part.

**Was any failure found?**

**YES**

**Clean or replace the air cleaner element.**
**Perform "After-inspection work" of INFORMATION section.**

**NO**

**Go to step 4.**

| 4 | Inspect the air flow sensor |
|---|---|

1. Check the installation of the air flow sensor.
2. Make sure there is no dirt or damage to the air flow sensor.

**Was any failure found?**

**YES**

**If dirt, clogging or damage was found, replace the sensor.**
**Perform "After-inspection work" of INFORMATION section.**

**NO**

**Go to step 5.**

| 5 | Inspect the air flow sensor connector |
|---|---|

1. Check the connection of the air flow sensor connector (Looseness and poor contact).

**Was any failure found?**

**YES**

**Connect securely, repair if needed.**
**Perform "After-inspection work" of INFORMATION section.**

**NO**

**Go to step 6.**

| 6 | Check the air intake system |
|---|---|

1. Check the air intake system (between air cleaner and diesel throttle) for dirt, clogging, or damage.

**Was any failure found?**

**YES**

**Clean or replace.**
**Perform "After-inspection work" of INFORMATION section.**

**NO**

**Go to step 7.**

| 7 | Inspect the boost pressure sensor |
|---|---|

1. Check the installation of the boost pressure sensor.
2. Make sure there is no dirt or damage to the boost pressure sensor.

**Was any failure found?**

**YES**

**Clean the boost pressure sensor and install it properly.**
**If dirt, clogging or damage was found, replace the sensor.**
**Perform "After-inspection work" of INFORMATION section.**

**NO**

**Go to step 8.**

| 8 | Inspect the intake air temperature sensor (intake manifold) connector |
|---|---|

1. Check the connection of the intake air temperature sensor (intake manifold) connector (Looseness and poor contact).

**Was any failure found?**

**YES**

**Connect securely, repair if needed.**
**Perform "After-inspection work" of INFORMATION section.**

**NO**

**Go to step 9.**

| 9 | Inspect the intake air temperature sensor (intake manifold) |
|---|---|

1. Check the installation of the intake air temperature sensor (intake manifold).
2. Make sure there is no dirt or damage to the intake air temperature sensor (intake manifold).

**Was any failure found?**

**YES**

**Clean the intake air temperature sensor (intake manifold) and install it properly.**
**If damaged, replace the sensor.**
**Perform "After-inspection work" of INFORMATION section.**

**NO**

**Go to step 10.**

| 10 | Inspect the EGR valve |
|---|---|

1. Check the EGR valve for damage due to foreign substances.
2. Check if there is soot obstructing the exhaust gas passageway inlet or outlet.

**Was any failure found?**

| YES | NO |
|---|---|
| **Remove foreign substances and clean the EGR valve.<br>Replace the EGR valve if it is damaged.<br>Perform "After-inspection work" of INFORMATION section.** | **Go to step 11.** |

| 11 | Check the injector [HINO DX II ] |
|---|---|

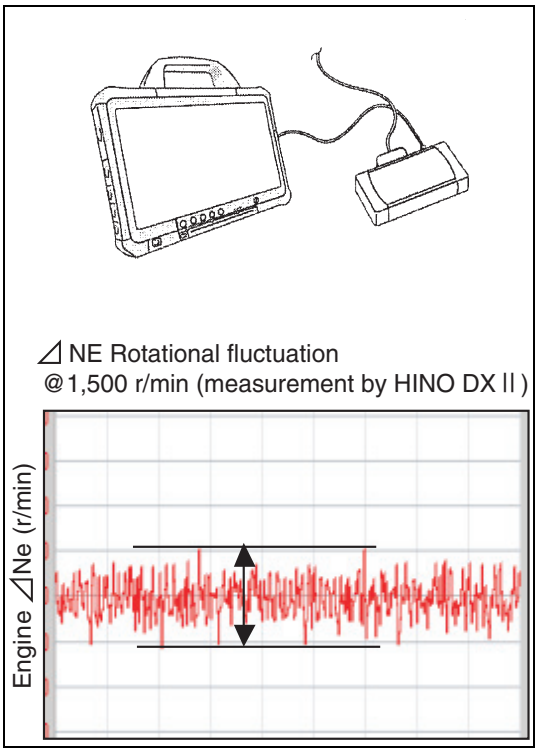


Check the injection quantity and the rotational fluctuation.

1. Start the [Engine].
2. Select [Injection quantity] from [Data monitor Setting] on HINO DX II menu, and measure the fuel injection rate.
3. Select [Engine revolution] from [Data monitor Setting] on HINO DX II menu, and measure the engine speed fluctuation.

| Measurement conditions |
|---|
| **Engine speed: 1,500 r/min No-load,<br>T/M shift lever: Neutral position, A/C off and Air compressor non operating.<br>Engine coolant temperature: more than 80 °C {176 °F}** |

**Standard values**

| Type of | Q ($mm^3$/st) | ⊿Ne (r/min) |
|---|---|---|
| MT | 5.0q ≤ | ≤ 26 |
| Allison® 2200 | 6.0q ≤ | |
| Allison® 2500 | | |
| Allison® 3500 | | |

**Do the measurements meet the standard value?<br>(Both the injection quantity and the rotational fluctuation are within the standard values)**

**YES**

**Go to step 12.**

**NO**

**Replace the injector.**
**Perform "After-inspection work" of INFORMATION section.**

| 12 | Check the DTC detected (Engine ECU) [HINO DX ll ] |
|---|---|

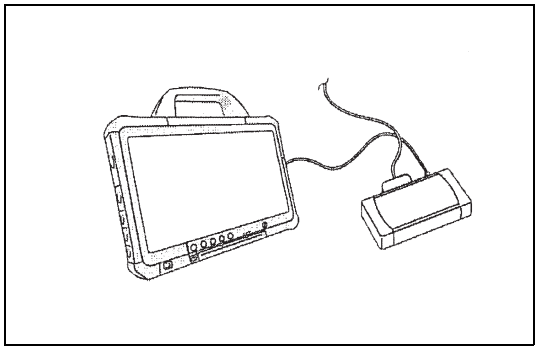

SAPH16F010301188

1. Warm-up the engine (engine coolant temperature: 60 °C {140 °F} or more)
2. Stop the engine.
3. Set the starter switch to the "ON" position.
4. Select [Engine] and check if P240F has been detected.

**Has DTC P240F been detected?**

**YES**

**Return to step 1, and perform again the inspection.**

**NO**

**Procedure completed.**
**Perform "After-inspection work" of INFORMATION section.**

# DTC: P2428

EN01H16F01030F03001171

## P2428: ATC over temperature

INFORMATION

**1. Technical description**

- –

**<Description of malfunction>**

- Engine ECU detects abnormally high ATC (After Turbo Catalyst) temperature

**2. DTC set condition**

(1) DTC detection condition

- While the engine is in operation.

(2) Judgment criteria

- Valve of the exhaust gas temperature sensor 4 (DPR inlet) more than 800 °C {1,472 °F}.
- Malfunction determination time: Immediately.

**3. Reset condition**

- Immediately after normal status is resumed.

**4. Indication, warning or system control regulation when the DTC is set.**

- MIL: OFF
- SVS light: OFF

**5. Symptoms on the vehicle when the DTC is set**

**<Symptoms on the vehicle due to backup control (fail safe function)>**

- –

**<Symptoms on the vehicle due to malfunction>**

- DPR regeneration is not succeeded.

**6. Pre-inspection work**

- Check that the battery voltage is in the normal range.

**7. After-inspection work**

- Clear all past DTCs.
- Check that no DTC is stored after test drive.

**8. Estimated failure factors**

- Abnormality in fuel injection quantity of the injector.
- Oil leakage from the engine.
- ATC (After Turbo Catalyst) melting damage.

## INSPECTION PROCEDURE: P2428

| 1 | Check the DTC detected (Engine ECU) |
|---|---|

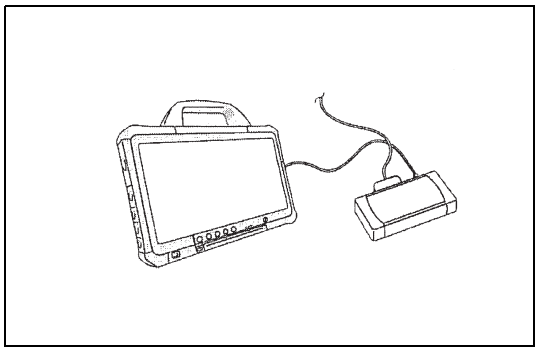

SAPH16F010301189

1. Set the starter switch to the "LOCK" position.
2. Connect the vehicle to HINO DX II .
3. Set the starter switch to the "ON" position.
4. Select [Engine] and check if any DTC other than P2428 (for example P2080) has been detected.

**Has a DTC (P2080) other than P2428 been detected?**

**YES**

**Go to diagnosis procedure of a related DTC.**

**NO**

**Go to step 2.**

| 2 | Inspect the injector [HINO DX II ] |
|---|---|

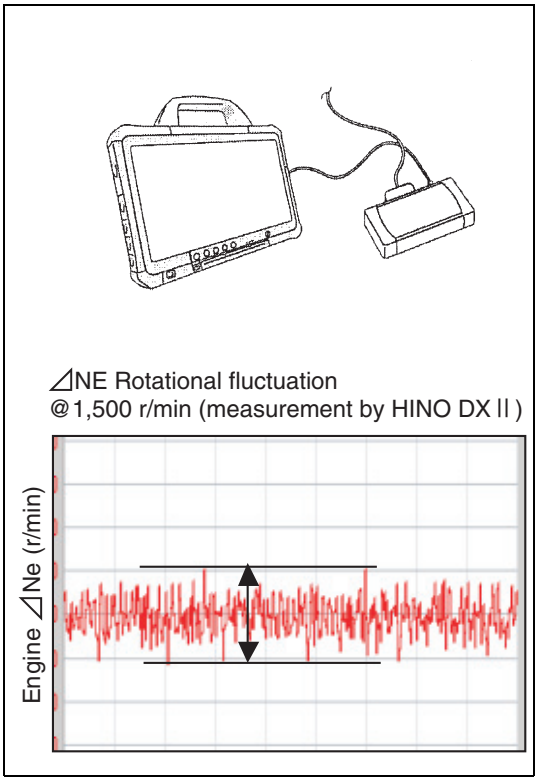


SAPH16F010301190

Check the injection quantity and the rotational fluctuation.

1. Start the engine.
2. Select [Injection quantity] from the [Data monitor Setting] menu and measure the injection quantity.
3. Select [Engine speed] from the [Data monitor Setting] menu and measure the rotational fluctuation.

| Measurement conditions |
|---|
| **Engine speed: 1,500 r/min No-load,<br>T/M shift lever: Neutral position, A/C off and<br>Air compressor un-operating.<br>Engine coolant temperature: more than 80 °C {176 °F}** |

**Standard values**

| Type of | Q ($mm^3$/st) | ⊿Ne (r/min) |
|---|---|---|
| MT | 5.0q ≤ | ≤ 26 |
| Allison® 2200 | 6.0q ≤ | |
| Allison® 2500 | | |
| Allison® 3500 | | |

**Do the measurements meet the standard value?
(Both the injection quantity and the rotational fluctuation are within the standard values)**

**YES**

**Go to step 3.**

**NO**

**Replace the injector.
Perform "After-inspection work" of INFORMATION section.**

| 3 | Inspect of the engine oil leakage |
|---|---|

1. Disconnect the intake pipe, hoses.
2. Check if there are oil stuck within pipe, hose.

**Was any failure found?**

**YES**

**Repair or replace the faulty part.**
**After repair or replace, go to step 4.**
**Perform "After-inspection work" of INFORMATION section.**

**NO**

**Go to step 4.**

| 4 | Inspect of the ATC |
|---|---|

1. Remove the ATC to check for abnormalities such as soot escape and damage.

**Was any failure found?**

**YES**

**Replace the ATC.**
**After replace, perform DPR manual regeneration.**

**NO**

**Go to step 5.**

| 5 | Perform DPR manual regeneration |
|---|---|

1. Perform DPR manual regeneration, and check succeeded.

**Was DPR manual regeneration succeeded?**

**YES**

**Procedure completed.**
**Perform "After-inspection work" of INFORMATION section.**

**NO**

**Replace the DPR.**

# DTC: P242B

EN01H16F01030F03001172

## P242B: Exhaust gas temperature sensor 3 (DOC inlet) - rationality

INFORMATION [Starter switch on]

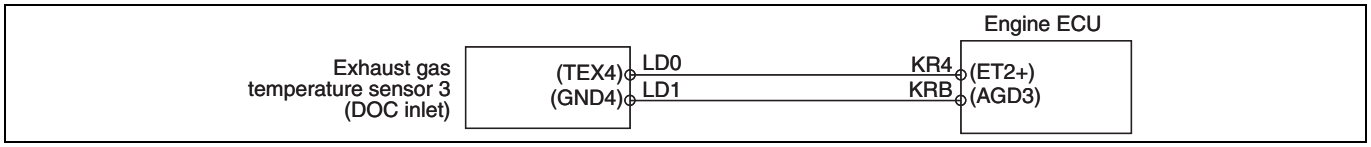


SAPH16F010301192

**1. Technical description**

- The exhaust gas temperature is constantly detected by the exhaust gas temperature sensor 3 (DOC inlet).
- The value of the exhaust gas temperature sensor 3 (DOC inlet) is used to control DPR regeneration.

**<Description of malfunction>**

- The exhaust gas temperature sensor 3 (DOC inlet) valve cannot be correctly recognized.

**2. DTC set condition**

(1) DTC detection condition

- Battery voltage is in the range of 11 V to 16 V.
- Starter switch ON.
- Engine stall.
- Difference between engine coolant temperature and intake temperature is within ±8 °C {±14.4 °F}.
- Difference between engine coolant temperature before starter switch "ON" and after starter switch "ON" is 30 °C {54 °F} or more.
- Engine coolant temperature and intake temperature are at least -10 °C {14 °F}.

(2) Judgment criteria

**The conditions described below remain for 1 seconds or more.**

- Difference between exhaust gas temperature sensor 1 (ATC upstream) and exhaust gas temperature sensor 2 (ATC downstream) stays less than ± 50°C {±90°F}.
- Difference between exhaust gas temperature sensor 2 (ATC downstream) and exhaust gas temperature sensor 3 (DOC inlet) stays more than ± 50°C {±90°F}.
- Difference between exhaust gas temperature sensor 3 (DOC inlet) and exhaust gas temperature sensor 4 (DPR inlet) stays less than ± 50°C {±90°F}.
- Differance between exhaust gas temperature sensor 4 (DPR inlet) and exhaust gas temperature sensor 5 (DPR outlet) stays less than ± 50°C {±90°F}.

**3. Reset condition**

- Immediately after normal operation is restored.

**4. Indication, warning or system control regulation when the DTC is set.**

- MIL: ON
- SVS light: OFF

**5. Symptoms on the vehicle when the DTC is set**

**<Symptoms on the vehicle due to backup control (fail safe function)>**

- –

**<Symptoms on the vehicle due to malfunction>**

- –

**6. Pre-inspection work**

- Check that the battery voltage is in the normal range.

**7. After-inspection work**

- Clear all past DTCs.
- Check that no DTC is stored after test drive.

**8. Estimated failure factors**

**Exhaust gas temperature sensor 3 (DOC inlet):**

- Disconnected sensor or sensing unit failure (due to dirt, clogging, damage, etc.)
- Abnormal sensor resistance
- Failure of engine ECU sensor power supply

## P242B: Exhaust gas temperature sensor 3 (DOC inlet) - rationality

INFORMATION [While Driving]

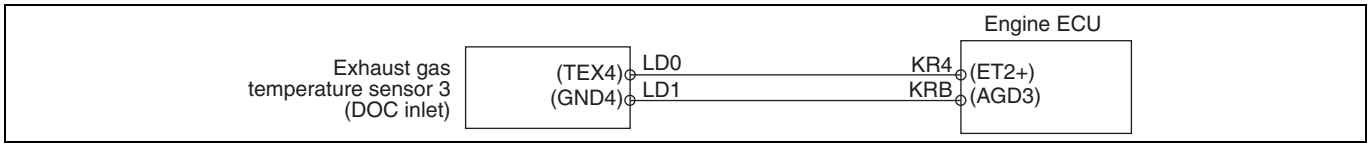


SAPH16F010301193

**1. Technical description**

- The exhaust gas temperature is constantly detected by the exhaust gas temperature sensor 3 (DOC inlet).
- The value of the exhaust gas temperature sensor 3 (DOC inlet) is used to control DPR regeneration.

**<Description of malfunction>**

- The exhaust gas temperature sensor 3 (DOC inlet) cannot be correctly recognized.

**2. DTC set condition**

(1) DTC detection condition

- At least 10 seconds has elapsed since engine was started.
- Cumulative exhaust gas flow amount ≥ 2 kg.
- Cumulative exhaust gas flow amount of 15 kg or more with after regeneration.

**After the above:**

- Battery voltage is in the range of 11 V to 16 V.
- Engine speed ≥ 500 r/min for at least 5 seconds
- Engine speed ≥ 1,750 r/min
- Fuel injection amount ≥ 15 $mm^3$/st/sec
- Exhaust gas flow quantity ≥ 500 kg/h
- Difference between engine coolant temperature and intake temperature is more than ± 8°C {±14.4°F}

**In addition, the following conditions continue for at least 10 seconds:**

- Engine speed variation is within ±625 r/min/sec.
- Fuel injection quantity variation is within ±625 $mm^3$/st.
- Vehicle speed ≥ 30 km/h {19 mph}

(2) Judgment criteria

- Difference between calculated value and actual value of exhaust gas temperature sensor 2 (ATC downstreem) is less than 100°C {212°F} for 3 seconds.
- Difference between calculated value and actual value of exhaust gas temperature sensor 3 (DOC inlet) is not less than 100°C {212°F} for 3 seconds.

**3. Reset condition**

- Immediately after normal operation is restored.

**4. Indication, warning or system control regulation when the DTC is set.**

- MIL: ON
- SVS light: OFF

**5. Symptoms on the vehicle when the DTC is set**

**<Symptoms on the vehicle due to backup control (fail safe function)>**

- –

**<Symptoms on the vehicle due to malfunction>**

- –

**6. Pre-inspection work**

- Check that the battery voltage is in the normal range.

**7. After-inspection work**

- Clear all past DTCs.
- Check that no DTC is detected after test drive.

**8. Estimated failure factors**

**Exhaust gas temperature sensor 3 (DOC inlet):**

- Disconnected sensor or sensing unit failure (due to dirt, clogging, damage, etc.)
- Abnormal sensor resistance
- Failure of engine ECU sensor power supply

## INSPECTION PROCEDURE: P242B

| 1 | Inspect the exhaust gas temperature sensor 3 (DOC inlet) connector |
|---|---|

1. Check the connection of the exhaust gas temperature sensor 3 (DOC inlet) connector (looseness and poor contact).

**Was any failure found?**

**YES**

**Connect securely, repair if needed.**
**Perform "After-inspection work" of INFORMATION section.**

**NO**

**Go to step 2.**

| 2 | Inspect the exhaust gas temperature sensor 3 (DOC inlet) |
|---|---|

1. Check the installation of the exhaust gas temperature sensor 3 (DOC inlet).
2. Make sure there is no dirt, damage or clogging in the sensing unit of the exhaust gas temperature sensor 3 (DOC inlet).

**Was any failure found?**

**YES**

**Clean the sensing unit and install it properly.**
**If damaged, replace the exhaust gas temperature sensor 3 (DOC inlet).**
**Perform "After-inspection work" of INFORMATION section.**

**NO**

**Go to step 3.**

| 3 | Inspect the exhaust gas temperature sensor 3 (DOC inlet) unit |
|---|---|

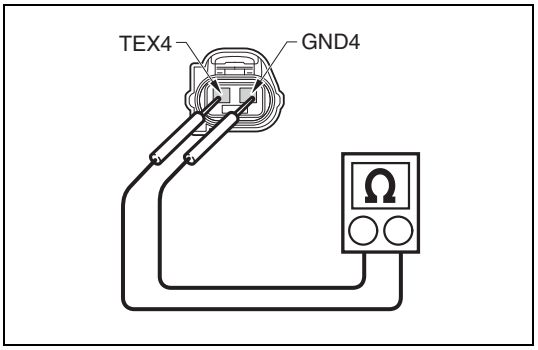


SAPH16F010301194

1. Set the starter switch to the "LOCK" position.
2. Disconnect the exhaust gas temperature sensor 3 (DOC inlet) connector.
3. Use the electrical tester to measure the resistance between the terminals of the exhaust gas temperature sensor 3 (DOC inlet).

| Measurement conditions | Tester connections | Standard values |
|---|---|---|
| **Starter switch: LOCK** | **Exhaust gas temperature sensor 3 (DOC inlet) TEX4 – GND4** | **20 °C {68 °F}: 13.7 – 29.8 kΩ 50 °C {122 °F}: 7.13 – 13.7 kΩ 80 °C {176 °F}: 4.1 – 7.13 kΩ** |

**Do the measurements meet the standard value?**

**YES**

**Go to step 4.**

**NO**

**Replace the exhaust gas temperature sensor 3 (DOC inlet).**
**Perform "After-inspection work" of INFORMATION section.**

| 4 | Inspect the sensor power supply |
|---|---|

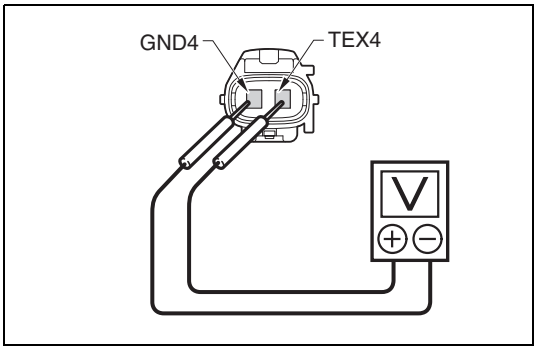


SAPH16F010301195

1. Set the starter switch to the "ON" position.
2. Use the electrical tester to measure the voltage between the terminals of the exhaust gas temperature sensor 3 (DOC inlet) vehicle-side connector.

| Measurement conditions | Tester connections | Standard values |
|---|---|---|
| **Starter switch: ON** | **Exhaust gas temperature sensor 3 (DOC inlet) vehicle-side connector TEX4 – GND4** | **4.5 – 5.5 V** |

**Do the measurements meet the standard value?**

| YES | NO |
|---|---|
| **Go to step 7.** | **Go to step 5.** |

## 5 Inspect for short-circuit of the exhaust gas temperature sensor 3 (DOC inlet) harness

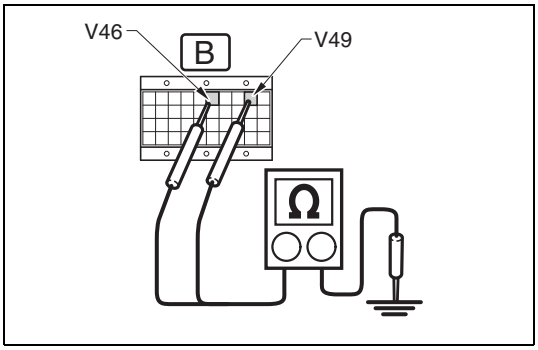

SAPH16F010301196

1. Set the starter switch to the "LOCK" position.
2. Connect the signal check harness to the engine ECU. (Do not connect harness to the ECU.)
3. Use the electrical tester to measure the resistance between the terminals of the engine ECU and ground.

| Measurement conditions | Tester connections | Standard values |
|---|---|---|
| **Starter switch: LOCK** | **Engine ECU (signal check harness) ET2+ (V49) – Ground AGD3 (V46) – Ground** | **∞ Ω** |

**Do the measurements meet the standard value?**

| YES | NO |
|---|---|
| **Go to step 6.** | **Repair or replace the harness. Perform "After-inspection work" of INFORMATION section.** |

## 6 Inspect disconnection of the exhaust gas temperature sensor 3 (DOC inlet) harness

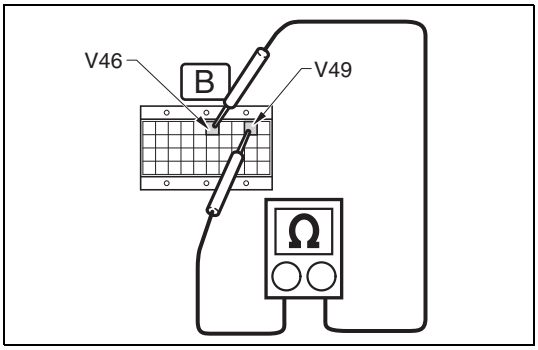

SAPH16F010301197

1. Connect the exhaust gas temperature sensor 3 (DOC inlet) connector.
2. Use the electrical tester to measure the resistance between the terminals of the engine ECU (signal check harness).

| Measurement conditions | Tester connections | Standard values |
|---|---|---|
| **Starter switch: LOCK** | **ngine ECU (signal check harness) ET2+ (V49) – AGD3 (V46)** | **20 °C {68 °F}: 13.7 – 29.8 kΩ 50 °C {122 °F}: 7.13 – 13.7 kΩ 80 °C {176 °F}: 4.1 – 7.13 kΩ** |

**Do the measurements meet the standard value?**

| YES | NO |
|---|---|
| **Go to step 7.** | **Repair or replace the harness.<br>Perform "After-inspection work" of INFORMATION section.** |

| 7 | Check the DTC detected (Engine ECU) |
|---|---|

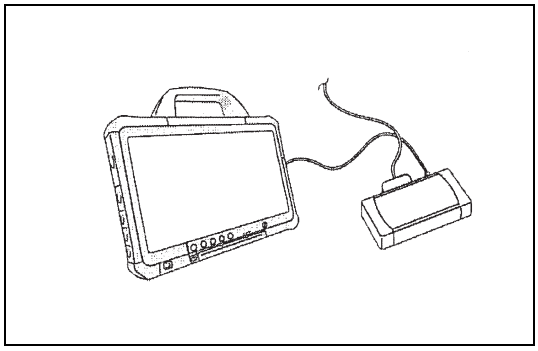

SAPH16F010301198

1. Perform engine warm up. (engine coolant temperature: 80 °C {176 °F} or more)
2. Stop the engine and set the starter switch to the "LOCK" position.
3. Connect the vehicle to HINO DX II .
4. Set the starter switch to the "ON" position.
5. Select [Engine] and check if P242B has been detected.

**Has DTC P242B been detected?**

| YES | NO |
|---|---|
| **Replace the engine ECU.<br>Perform "After-inspection work" of INFORMATION section.** | **Procedure completed.<br>Perform "After-inspection work" of INFORMATION section.** |

# DTC: P242C and P242D

EN01H16F01030F03001173

## P242C: Exhaust gas temperature sensor 3 (DOC inlet) - out of range (Out of range low)

INFORMATION

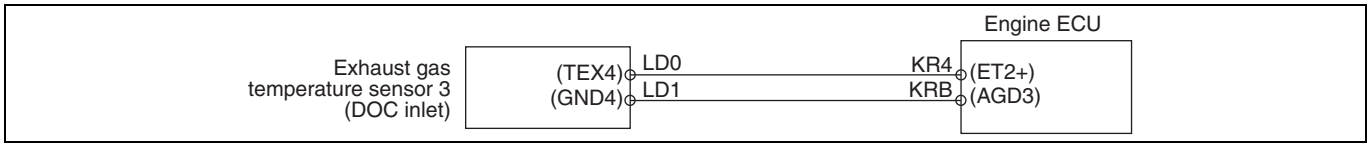


SAPH16F010301199

**1. Technical description**

- The exhaust gas temperature sensor 3 (DOC inlet) consistently detects exhaust gas temperature.
- A reading taken by the exhaust gas temperature sensor 3 (DOC inlet) is used to control DPR regeneration.

**<Description of malfunction>**

- Exhaust gas temperature sensor 3 (DOC inlet) detects circuit voltage abnormality.

**2. DTC set condition**

(1) DTC detection condition

- Battery voltage is in the range of 10 V to 16 V.

(2) Judgment criteria

- Voltage of the exhaust gas temperature sensor 3 (DOC inlet) remains less than 0.063 V (1,165 °C {2,129 °F}) for 3 seconds.

**3. Reset condition**

- After restoration to normal condition

**4. Indication, warning or system control regulation when the DTC is set.**

- MIL: ON
- SVS light: OFF

**5. Symptoms on the vehicle when the DTC is set**

**<Symptoms on the vehicle due to backup control (fail safe function)>**

- –

**<Symptoms on the vehicle due to malfunction>**

- –

**6. Pre-inspection work**

- Check that the battery voltage is in the normal range.

**7. After-inspection work**

- Clear all past DTCs.
- Check that no DTC is stored after test drive.

**8. Estimated failure factors**

**Exhaust gas temperature sensor 3 (DOC inlet):**

- Loose/disconnected sensor or failure in sensing area (contamination, clogging or breakage)
- Abnormal resistance of sensor
- Failure in engine ECU sensor power supply
- Disconnection or short-circuit in sensor harness
- Irregular contact (disconnection or poor fit of connector)

## P242D: Exhaust gas temperature sensor 3 (DOC inlet) - out of range (Out of range high)

INFORMATION

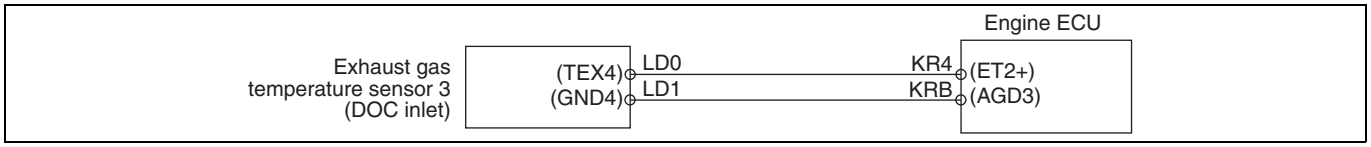


SAPH16F010301200

**1. Technical description**

- The exhaust gas temperature sensor 3 (DOC inlet) consistently detects exhaust gas temperature.
- A reading taken by the exhaust gas temperature sensor 3 (DOC inlet) is used to control DPR regeneration.

**<Description of malfunction>**

- Exhaust gas temperature sensor 3 (DOC inlet) detects circuit voltage abnormality.

**2. DTC set condition**

(1) DTC detection condition

- Intake air temperature is -20 °C {-4 °F} or higher.
- Battery voltage is in the range of 10 V to 16 V.

(2) Judgment criteria

- Voltage of the exhaust gas temperature sensor 3 (DOC inlet) remains at 4.958 V or higher (-46 °C {-50.8 °F} or lower) for 3 seconds.

**3. Reset condition**

- After restoration to normal condition

**4. Indication, warning or system control regulation when the DTC is set.**

- MIL: ON
- SVS light: OFF

**5. Symptoms on the vehicle when the DTC is set**

**<Symptoms on the vehicle due to backup control (fail safe function)>**

- –

**<Symptoms on the vehicle due to malfunction>**

- –

**6. Pre-inspection work**

- Check that the battery voltage is in the normal range.

**7. After-inspection work**

- Clear all past DTCs.
- Check that no DTC is stored after test drive.

**8. Estimated failure factors**

**Exhaust gas temperature sensor 3 (DOC inlet):**

- Loose/disconnected sensor or failure in sensing area (contamination, clogging or breakage)
- Abnormal resistance of sensor
- Failure in engine ECU sensor power supply
- Disconnection or short-circuit in sensor harness
- Irregular contact (disconnection or poor fit of connector)

## INSPECTION PROCEDURE: P242C and P242D

| 1 | Inspect the exhaust gas temperature sensor 3 (DOC inlet) connector |
|---|---|

1. Check the connection of the exhaust gas temperature sensor 3 (DOC inlet) connector (looseness or poor contact).

**Was any failure found?**

**YES**

**Connect securely, repair if needed.**
**Perform "After-inspection work" of INFORMATION section.**

**NO**

**Go to step 2.**

| 2 | Inspect the exhaust gas temperature sensor 3 (DOC inlet) |
|---|---|

1. Check the installation of the exhaust gas temperature sensor 3 (DOC inlet).
2. Make sure there is no dirt, damage or clogging in the sensing unit of the exhaust gas temperature sensor 3 (DOC inlet).

**Was any failure found?**

**YES**

**Clean the sensing unit and connect the sensor securely.**
**If damaged, replace the exhaust gas temperature sensor 3 (DOC inlet).**
**Perform "After-inspection work" of INFORMATION section.**

**NO**

**Go to step 3.**

| 3 | Inspect the exhaust gas temperature sensor 3 (DOC inlet) unit |
|---|---|

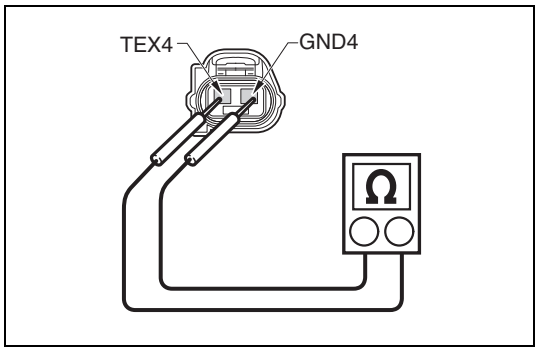


SAPH16F010301201

1. Set the starter switch to the "LOCK" position.
2. Disconnect the exhaust gas temperature sensor 3 (DOC inlet) connector.
3. Use the electrical tester to measure the resistance between the terminals of the exhaust gas temperature sensor 3 (DOC inlet).

| Measurement conditions | Tester connections | Standard values |
|---|---|---|
| **Starter switch: LOCK** | **Exhaust gas temperature sensor 3 (DOC inlet) TEX4 – GND4** | **20 °C {68 °F}: 13.7 – 29.8 kΩ 50 °C {122 °F}: 7.13 – 13.7 kΩ 80 °C {176 °F}: 4.1 – 7.13 kΩ** |

**Do the measurements meet the standard value?**

**YES**

**Go to step 4.**

**NO**

**Replace the exhaust gas temperature sensor 3 (DOC inlet).**
**Perform "After-inspection work" of INFORMATION section.**

| 4 | Inspect the sensor power supply |
|---|---|

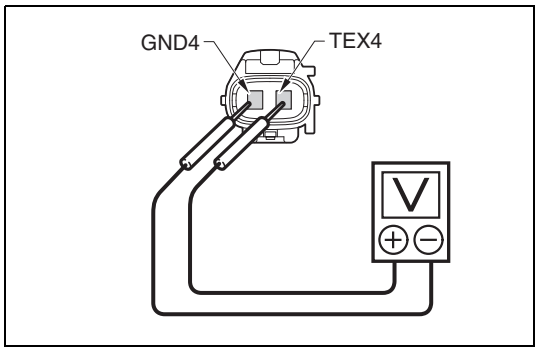


SAPH16F010301202

1. Set the starter switch to the "ON" position.
2. Use the electrical tester to measure the voltage between the terminals of the exhaust gas temperature sensor 3 (DOC inlet).

| Measurement conditions | Tester connections | Standard values |
|---|---|---|
| **Starter switch: ON** | **Exhaust gas temperature sensor 3 (DOC inlet) vehicle-side connector TEX4 – GND4** | **4.5 – 5.5 V** |

**Do the measurements meet the standard value?**

| YES | NO |
|---|---|
| **Go to step 7.** | **Go to step 5.** |

| 5 | **Check short-circuit in wire harness of exhaust gas temperature sensor 3 (DOC inlet)** |
|---|---|

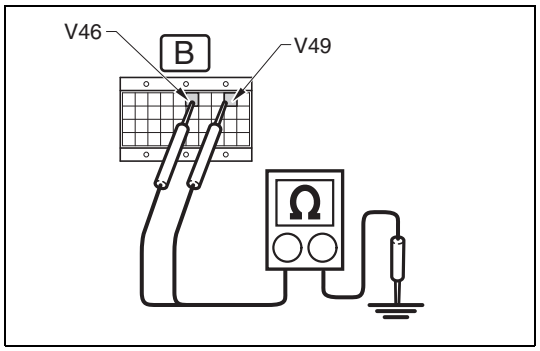

SAPH16F010301203

1. Set the starter switch to the "LOCK" position.
2. Connect the signal check harness to the engine ECU vehicle-side harness. (Do not connect the harness to the ECU.)
3. Use the electrical tester to measure the resistance between the engine ECU (signal check harness) terminals and ground.

| Measurement conditions | Tester connections | Standard values |
|---|---|---|
| **Starter switch: LOCK** | **Engine ECU (signal check harness) ET2+ (V49) – Ground<br>AGD3 (V46) – Ground** | ∞ Ω |

**Do the measurements meet the standard value?**

| YES | NO |
|---|---|
| **Go to step 6.** | **Repair or replace the harness.<br>Perform "After-inspection work" of INFORMATION section.** |

## 6 Check disconnection in wire harness of exhaust gas temperature sensor 3 (DOC inlet)

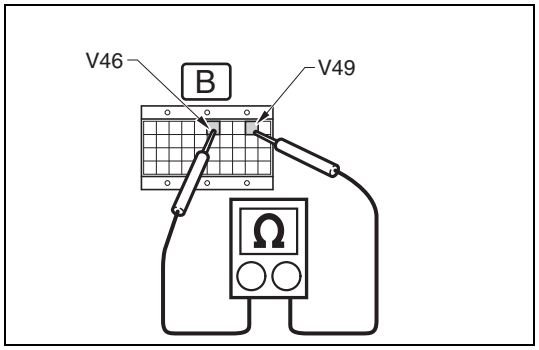

SAPH16F010301204

1. Connect the exhaust gas temperature sensor 3 (DOC inlet) connector.
2. Use the electrical tester to measure the resistance between the terminals of the engine ECU (signal check harness).

| Measurement conditions | Tester connections | Standard values |
|---|---|---|
| **Starter switch: LOCK** | **Engine ECU (signal check harness) ET2+ (V49) – AGD3 (V46)** | **20 °C {68 °F}: 13.7 – 29.8 kΩ 50 °C {122 °F}: 7.13 – 13.7 kΩ 80 °C {176 °F}: 4.1 – 7.13 kΩ** |

**Do the measurements meet the standard value?**

**YES**

**Go to step 7.**

**NO**

**Repair or replace the harness.**
**Perform "After-inspection work" of INFORMATION section.**

## 7 Check the DTC detected (Engine ECU)

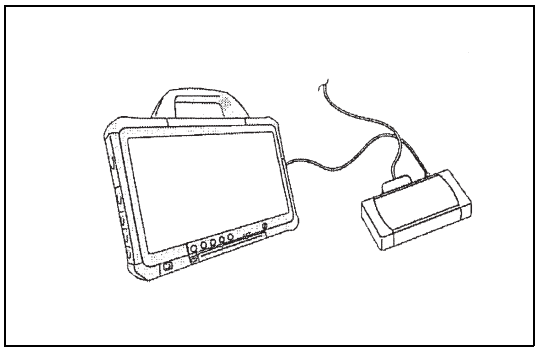
SAPH16F010301205

1. Perform engine warm up. (engine coolant temperature: 80 °C {176 °F} or more)
2. Stop the engine and set the starter switch to the "LOCK" position.
3. Connect the vehicle to HINO DX II .
4. Set the starter switch to the "ON" position.
5. Select [Engine] and check if the DTC (P242C or P242D) has been detected.

**Has DTC (P242C or P242D) been detected?**

**YES**

**Replace the engine ECU.**
**Perform "After-inspection work" of INFORMATION section.**

**NO**

**Procedure completed.**
**Perform "After-inspection work" of INFORMATION section.**

# DTC: P244A

EN01H16F01030F03001174

## P244A: Filtering performance (missing substrate)

INFORMATION [missing substrate]

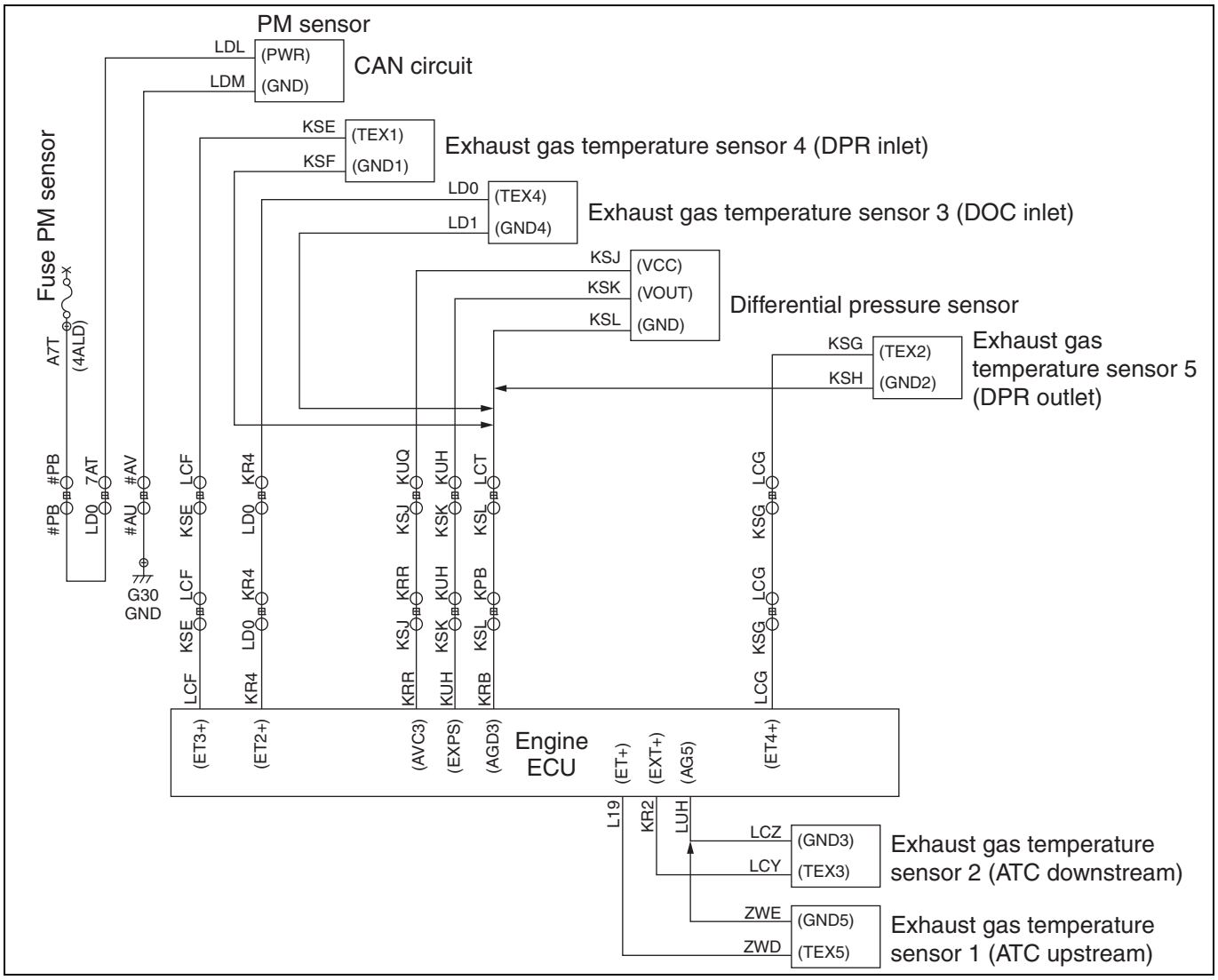


SAPH16F010301206

**1. Technical description**

- ECU constantly calculate and accumulate the amount of soot emission from the engine.
- Based on the values of the differential pressure sensor and the DPR temperature sensor, ECU detects clogging and erosion of the DPR.

**<Description of malfunction>**

- Abnormal drop in differential pressure in DPR part is detected.

**2. DTC set condition**

(1) DTC detection condition

- The engine must not be stopped.
- After automatic regeneration
- Calculated exhaust gas flow quantity of 205 L/s or higher
- Exhaust brake is inactive.

(2) Judgment criteria
- Failure is determined when the value of "differential pressure/exhaust gas flow rate" counted in establishing the judgment criteria is lower than the threshold value.

**3. Reset condition**
- Immediately after normal operation is restored and DPR-related memory is reset.

**4. Indication, warning or system control regulation when the DTC is set.**
- MIL: ON
- SVS light: OFF

**5. Symptoms on the vehicle when the DTC is set**

**<Symptoms on the vehicle due to backup control (fail safe function)>**
- –

**<Symptoms on the vehicle due to malfunction>**
- –

**6. Pre-inspection work**
- Check that the battery voltage is in the normal range.

**7. After-inspection work**
- Clear all past DTCs.
- Reset DPR related memory.
- Check that no DTC is stored after test drive.

**8. Estimated failure factors**
- DPR filter:
  Check for intended filter tampering or damage on the rear end surface.
- Abnormal control of the temperature at regeneration
- Filter damage due to abnormally-high temperature at regeneration due to excessive soot emission.
  Injector: Characteristic abnormality of injection volume
  SCV: Faulty control of common rail pressure
  EGR valve: Faulty control of EGR opening angle
  Diesel throttle valve: Faulty control of diesel throttle valve opening angle

**[Confirmation points for judgment]**
- Fault in the differential pressure sensor system
  - Faulty differential pressure sensor
  - Check if differential pressure value is wrongly sensed because of damaged hose or wrong connection.
  - Check for misjudgment due to clogging, hole or fault in the differential sensor pipe.
- Fault in the air flow meter
  - Check for misjudgment due to abnormal air volume for gas flow quantity calculation.
- Exhaust gas temperature sensor
  - Check for misjudgment due to characteristic abnormality of the temperature for gas flow quantity calculation.

## P244A: Filtering performance (missing substrate)

INFORMATION [Breakage of DPR filter]

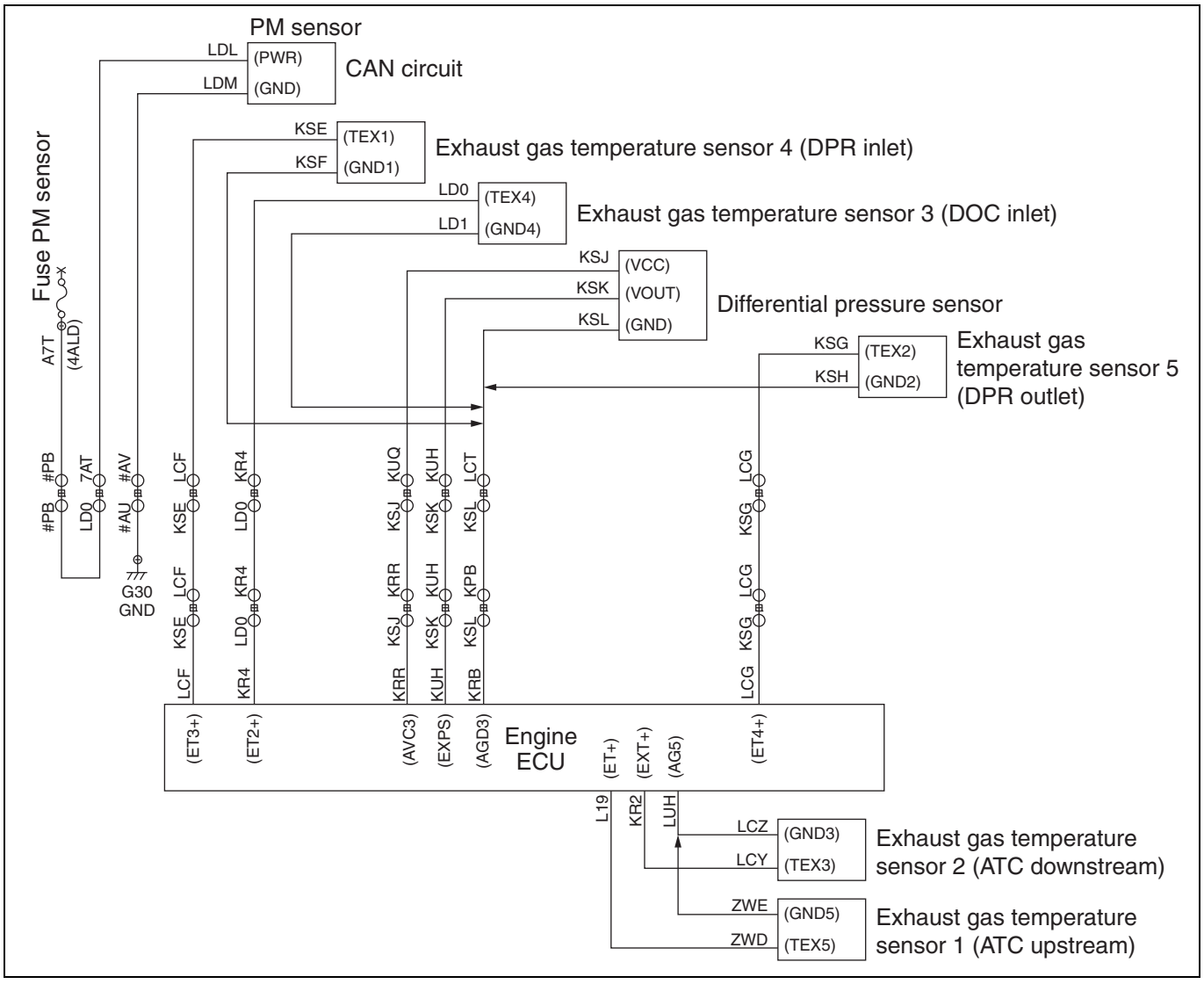


SAPH16F010301207

**1. Technical description**

- Based on the values of the differential pressure sensor and the DPR temperature sensor, ECU detects clogging and erosion of the DPR.

**<Description of malfunction>**

- Abnormal drop in differential pressure in DPR part is detected.

**2. DTC set condition**

(1) DTC detection condition

- The engine is not stopped.

(2) Judgment criteria

- Failure is determined when the differential pressure value averaged over 15 seconds is less than the threshold value obtained from the intake air quantity, fuel injection quantity, and the prescribed exhaust gas flow quantity derived from the exhaust temperature, and this is detected 6 times.
  (Example: A differential pressure of 2 kPa {0.3 psi} or less is detected 6 times when the average exhaust gas flow quantity is 800 L/s.)

**3. Reset condition**

- Immediately after normal operation is restored and DPR-related memory is reset.

**4. Indication, warning or system control regulation when the DTC is set.**

- MIL: ON
- SVS light: OFF

**5. Symptoms on the vehicle when the DTC is set**

**<Symptoms on the vehicle due to backup control (fail safe function)>**

- –

**<Symptoms on the vehicle due to malfunction>**

- –

**6. Pre-inspection work**

- Check that the battery voltage is in the normal range.

**7. After-inspection work**

- Clear all past DTCs.
- Reset DPR related memory.
- Check that no DTC is detected after test drive.

**8. Estimated failure factors**

- DPR filter:
  Check for intended filter tampering or damage on the rear end surface.
- Abnormal control of the temperature at regeneration
- Filter damage due to abnormally-high temperature at regeneration due to excessive soot emission.
  Injector: Characteristic abnormality of injection volume
  SCV: Faulty control of common rail pressure
  EGR valve: Faulty control of EGR opening angle
  Diesel throttle valve: Faulty control of diesel throttle valve opening angle

**[Confirmation points for judgment]**

- Fault in the differential pressure sensor system
  - Faulty differential pressure sensor
  - Check if differential pressure value is wrongly sensed because of damaged hose or wrong connection.
  - Check for misjudgment due to clogging, hole or fault in the differential sensor pipe.
- Fault in the air flow meter
  - Check for misjudgment due to abnormal air volume for gas flow quantity calculation.
- Exhaust gas temperature sensor
  - Check for misjudgment due to characteristic abnormality of the temperature for gas flow quantity calculation.

## INSPECTION PROCEDURE: P244A

| 1 | Check the exhaust gas temperature sensor 5 (DPR outlet) [HINO DX II ] |
|---|---|

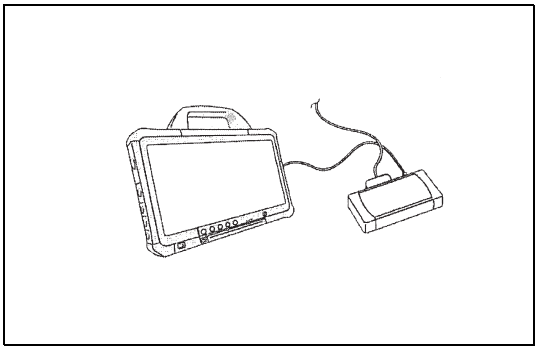

SAPH16F010301208

1. Use [DPR outlet maximum exhaust gas temperature] from [DX Report] to read the history of the exhaust gas temperature sensor 5 (DPR outlet).
   • HINO DX II selection items: [Past work information] / (VIN of the relevant vehicle) / [Open] / [Print] / [Vehicle data] / [Print].

**Have a temperature of over 950 °C {1,742 °F} been detected?**

**YES**

**Go to step 8.**

**NO**

**Go to step 3.**

| 2 | Inspect the differential pressure sensor pipe |
|---|---|

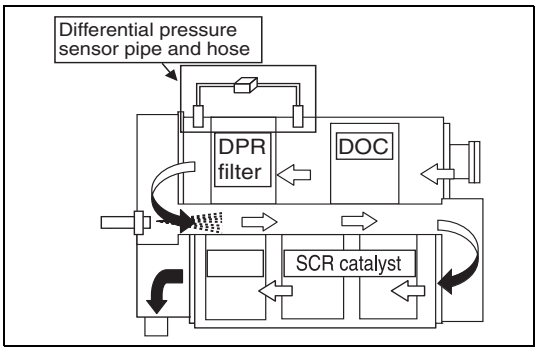


SAPH16F010301209

1. Inspect the differential pressure sensor pipe for clogging, cracks or other damages.

**Was any failure found?**

**YES**

**Repair (clean) or replace the differential pressure sensor pipe.**
**Perform "After-inspection work" of INFORMATION section.**

**NO**

**Go to step 3.**

| 3 | Inspect the differential pressure sensor hose |
|---|---|

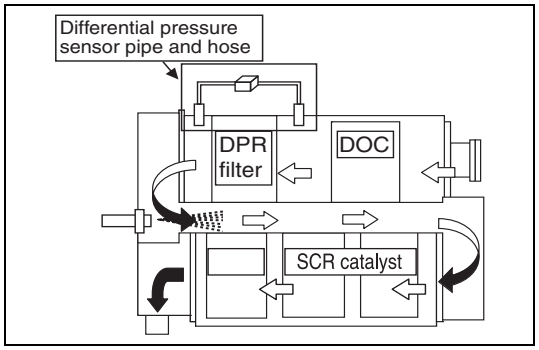


SAPH16F010301210

1. Inspect the differential pressure sensor hose for clogging, cracks or damages.

**Was any failure found?**

**YES**

**Repair (cleaning) or replace the differential pressure sensor hose.**
**Perform "After-inspection work" of INFORMATION section.**

**NO**

**Go to step 4.**

| 4 | Inspect the differential pressure sensor connector |
|---|---|

1. Inspect the connection of differential pressure sensor connector (Looseness and poor contact).

**Was any failure found?**

**YES**

**Connect securely, Repair if needed.**
**Perform "After-inspection work" of INFORMATION section.**

**NO**

**Go to step 5.**

| 5 | Inspect the differential pressure sensor |
|---|---|

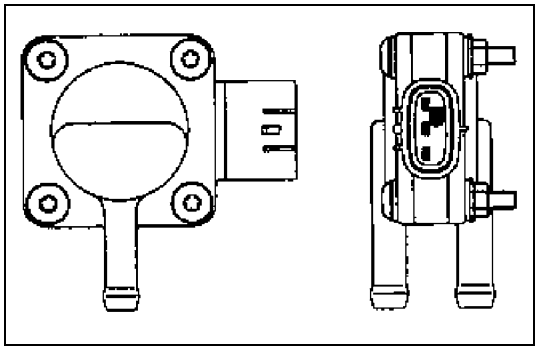

SAPH16F010301211

1. Inspect the sensor installation conditions.
2. Make sure there is no dirt or damage to the differential pressure sensor.

**Was any failure found?**

| YES | NO |
|---|---|
| **Clean the differential pressure sensor and install it properly.<br>If damaged, replace the differential pressure sensor.<br>Perform "After-inspection work" of INFORMATION section.** | **Go to step 6.** |

## 6 Inspect the differential pressure sensor unit

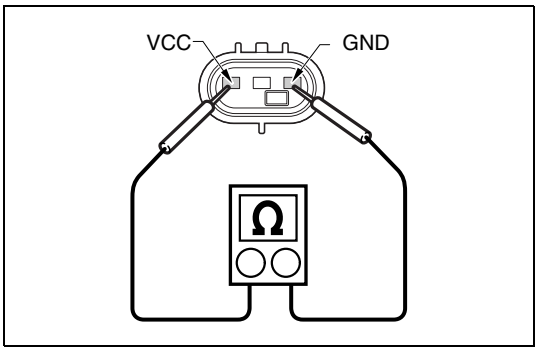


SAPH16F010301212

1. Set the starter switch to the "LOCK" position.
2. Disconnect the DPR differential pressure sensor connector.

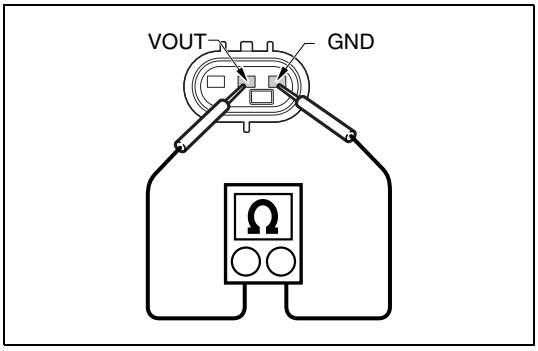


SAPH16F010301213

3. Measure the resistance between the terminals of the sensor using the electrical tester.

| Measurement conditions | Tester connections | Standard values |
|---|---|---|
| Starter switch: LOCK | DPR differential pressure sensor<br>VCC – GND<br>VOUT – GND | 2 – 15 kΩ |

**Do the measurements meet the standard value?**

| YES | NO |
|---|---|
| **Go to step 8.** | **Replace the differential pressure sensor.<br>Perform "After-inspection work" of INFORMATION section.** |

| 7 | Inspect the DPR filter |
|---|---|



Damage

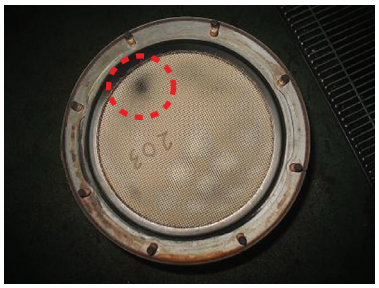

Soot leakage

SAPH16F010301214

1. Remove the DPR filter and check if there is no soot, damages or other abnormalities at its end.

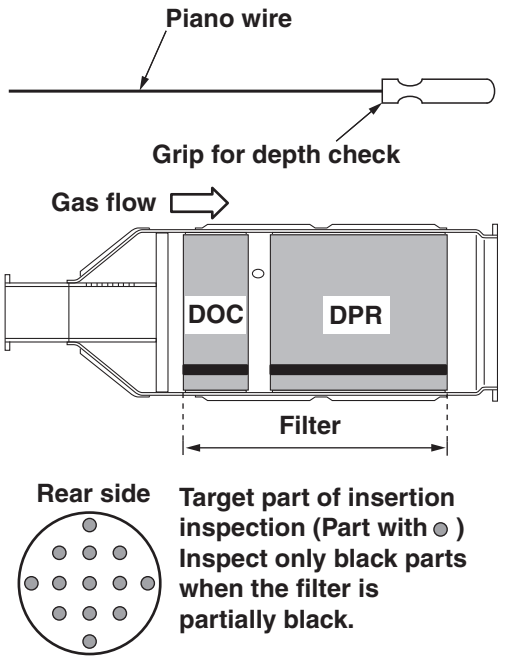


SAPH16F010301215

2. Insert the check probe from the rear surface to inspect the inside.

3. Check for probe inserting depth.

| Standard values |
|---|
| 175 - 185 mm {6.890 - 7.283 in.} |

**Was any failure found?**

| YES | NO |
|---|---|
| **Replace the DPR filter and PM sensor and clean the igniter.<br>Perform "After-inspection work" of INFORMATION section.** | **Go to step 8.** |

| 8 | Check the response of the EGR valve [HINO DX II ] |
|---|---|

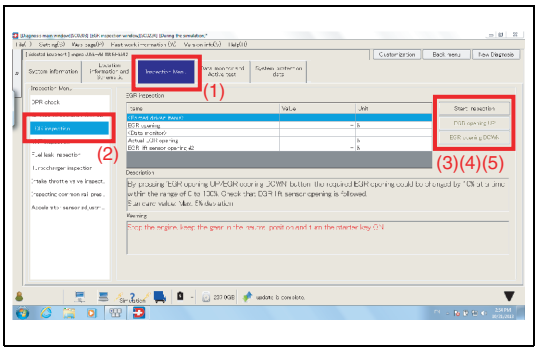


SAPH16F010301216

1. Set the starter switch to the "LOCK" position.
2. Connect the vehicle to HINO DX II .
3. Set the starter switch to the "ON" position.
4. Select [Engine] on the screen of HINO DX II .
5. Select [EGR inspection] from the [Inspection Menu], then inspect the response delay at the Target EGR position and Actual EGR position.

**⚠ CAUTION**
**Perform the inspection while the engine is stopped to avoid engine damages.**

<Inspection procedure>
(1) Select [Inspection Menu].
(2) Select [EGR inspection].
(3) Click [Start inspection].
(4) Click [EGR opening UP]:
• Inspect the response delay at each step of the Target EGR position and Actual EGR position from 0 to 100 %.
(5) Click [EGR opening DOWN]:
• Inspect the response delay at each step of the Target EGR position and Actual EGR position from 100 to 0 %.

**HINT**
**The EGR opening position changes of 10 % per step between 0 – 100 %.**

| Standard values |
|---|
| **From the Target EGR position to the Actual EGR position, the response delay should be within 5 seconds.** |

**Are the measurements within standard value?**

| YES | NO |
|---|---|
| **Go to step 9.** | **Replace the EGR valve.<br>Perform "After-inspection work" of INFORMATION section.** |

| 9 | Check the response delay of the VNT controller |
|---|---|

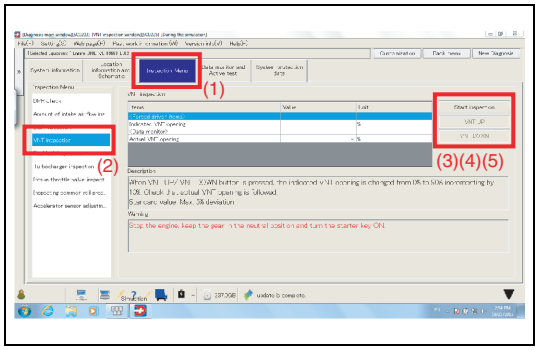


SAPH16F010301217

1. Select [VNT inspection] from the menu, and inspect the response delay at the Target VNT position and Actual VNT position.

**⚠ CAUTION**
**Perform the inspection while the engine is stopped to avoid engine damages.**

<Inspection procedure>
(1) Select [Inspection Menu].
(2) Select [VNT inspection].
(3) Click [Start inspection].
(4) Click [VNT UP].
• Inspect the response delay at each step of the Target VNT position and Actual VNT position from 0 to 90 %.
(5) Click [VNT DOWN].
• Inspect the response delay at each step of the Target VNT position and Actual VNT position from 90 to 0 %.

**HINT**
**The VNT opening position changes of 10 % per step between 0 – 90 %.**

| Standard values |
|---|
| The response delay should be less than 3 seconds. |

**Do the measurements meet the standard value?**

**YES**

**Go to step 10.**

**NO**

**Replace the turbocharger.**
**Perform "After-inspection work" of INFORMATION section.**

| 10 | Inspect the diesel throttle valve |
|---|---|

1. Check if there are no abnormal opening angles or that the valve is not stuck.

**Was any failure found?**

**YES**

**Replace the diesel throttle valve.**
**Perform "After-inspection work" of INFORMATION section.**

**NO**

**Go to step 11.**

| 11 | Inspect the SCV |
|---|---|

1. Perform the SCV free acceleration test.

- For a detailed procedure, refer to the separate "SCV free acceleration test" in the following pages.

**Was any failure found?**

**YES**

**Repair or replace the faulty part.**
**Perform "After-inspection work" of INFORMATION section.**

**NO**

**Go to step 12.**

| 12 | Inspect the injector [HINO DX II ] |
|---|---|

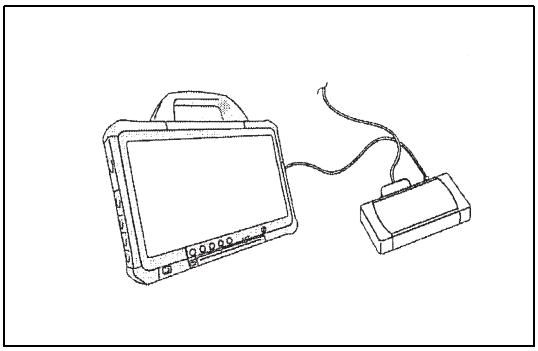

SAPH16F010301218

Check the injection quantity and the rotational fluctuation.

1. Start the engine
2. Select [Injection quantity] from the [Data monitor Setting] menu, and measure the fuel injection quantity.
3. Select [Engine revolution] from the [Data monitor Setting] menu, and measure the rotational fluctuation.

| Measurement conditions |
|---|
| **Engine speed: 1,500 r/min No-load,**<br>**T/M shift lever: Neutral position, A/C off and Air compressor non operating.**<br>**Engine coolant temperature: more than 80 °C {176 °F}** |

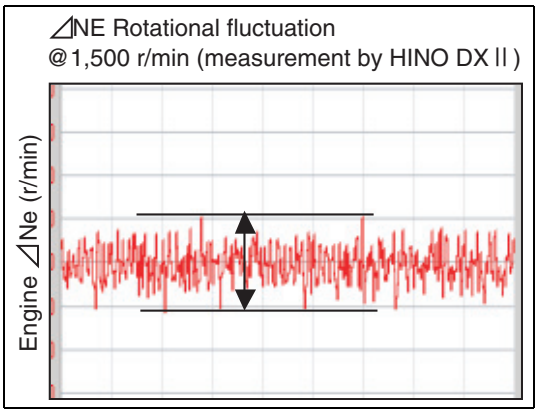


SAPH16F010301219

**Standard values**

| Type of | Q ($mm^3$/st) | ⊿Ne (r/min) |
|---|---|---|
| MT | 5.0q ≤ | ≤ 26 |
| Allison® 2200 | 6.0q ≤ | |
| Allison® 2500 | | |
| Allison® 3500 | | |

**Do the measurements meet the standard values?**
**(Do the injection volume and the rotational fluctuation meet their standard values?)**

YES

**Go to step 13.**

NO

**Replace the injector.**
**Perform "After-inspection work" of INFORMATION section.**

| 13 | **Check the DTC detected (Engine ECU) [HINO DX ll ]** |
|---|---|

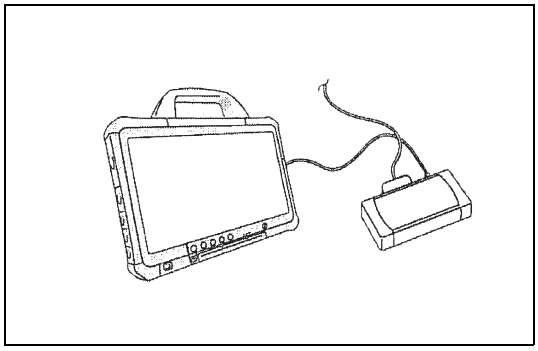

SAPH16F010301221

1. Perform an engine warm-up. (engine coolant temperature: 60 °C {140 °F} or more)
2. Stop the engine.
3. Set the starter switch to the "ON" position.
4. Select [Engine] and check if the DTC P244A has been detected.

**Has DTC P244A been detected?**

YES

**Replace the engine ECU.**
**Perform "After-inspection work" of INFORMATION section.**

NO

**Procedure completed.**
**Perform "After-inspection work" of INFORMATION section.**

## SCV FREE ACCELERATION TEST

| 1 | Test method |
|---|---|

**<Engine speed pattern>**

1. After engine has reached operating temperature (more than 82 °C {179.6 °F}).
2. After air compressor completed building pressure.
3. A/C, Head lights off.
4. All devices off. (PTO, Refrigeration compressor. etc)
5. Control the engine revolution by means of operating Cruise Control system.

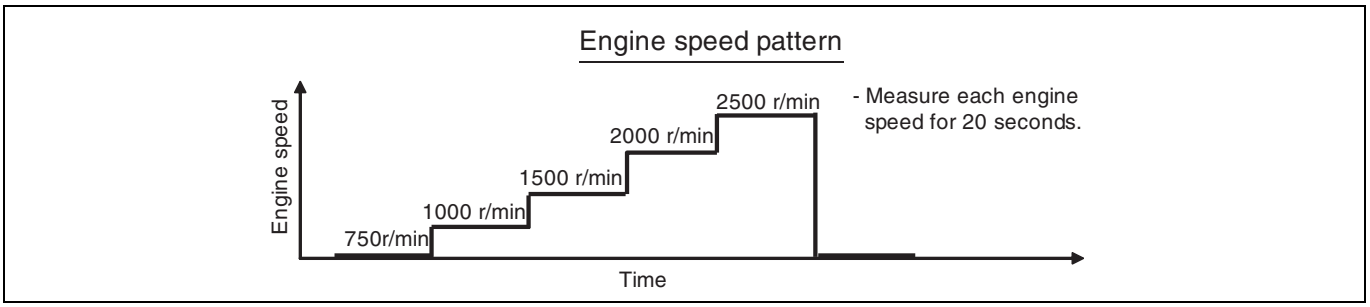


SAPH16F010301222

**<Acceleration pattern>**

1. After engine has reached operating temperature (more than 82 °C {179.6 °F}).
2. After air compressor completed building pressure.
3. A/C, Head lights off.
4. All devices off. (PTO, Refrigeration compressor. etc)
5. Check that actual common rail pressure following target.

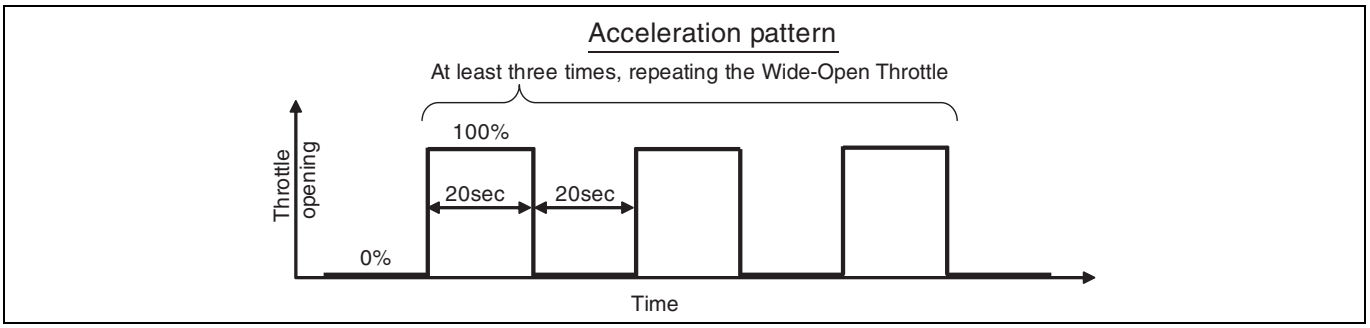


SAPH16F010301223

| 2 | Types of HINO DX II data to be measured |
|---|---|

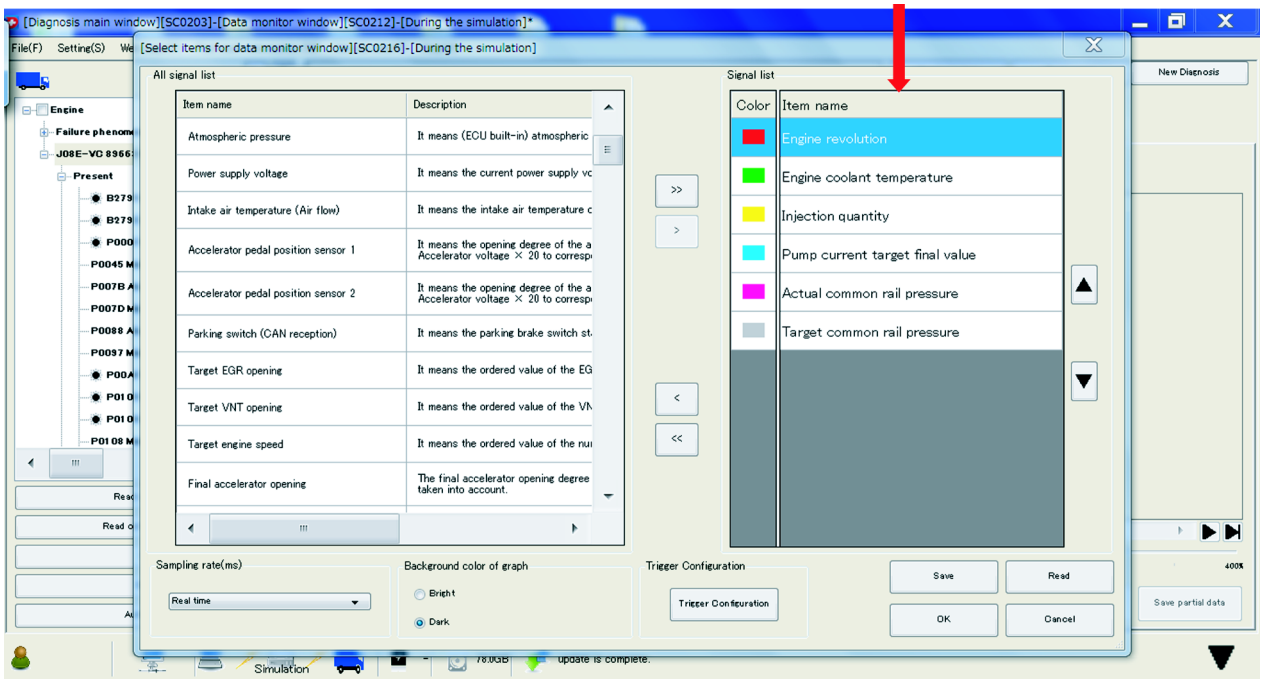


SAPH16F010301224

| 3 | If the following symptoms occur, FAIL. If not, OK. |
|---|---|

a. Pressure is reduced by 5 MPa or more continually for 5 seconds or more. → Replace the supply pump.

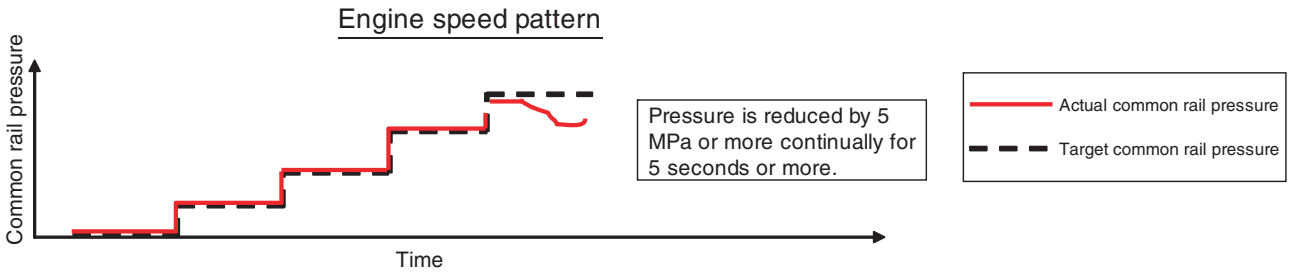


SAPH16F010301225

b. Pressure is increased by 5 MPa or more continually for 5 seconds or more. → Replace the SCV.

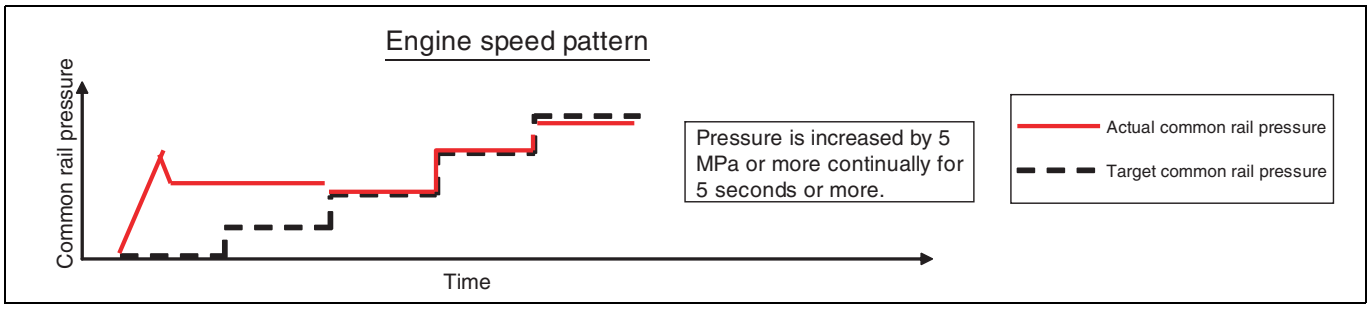


SAPH16F010301226

c. The maximum common rail pressure exceeds 222 MPa for even a moment during pressure increase. → Replace the SCV.

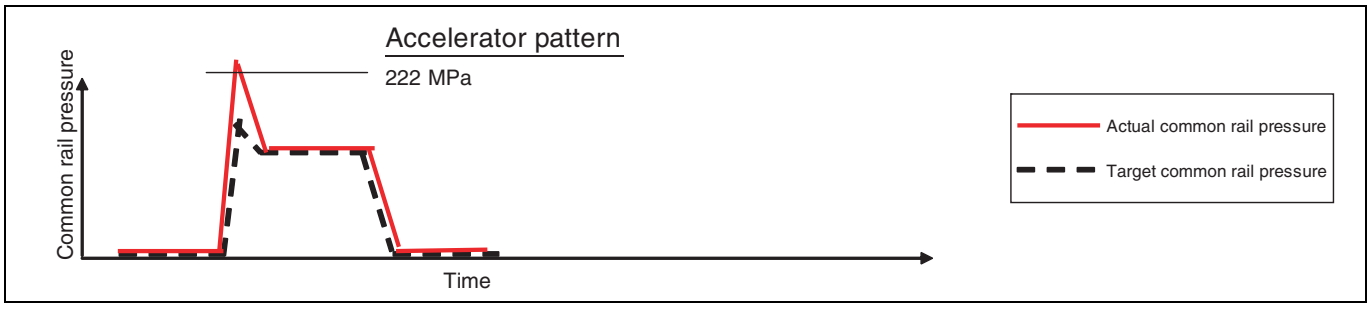


SAPH16F010301227

d. After the maximum common rail pressure exceeds 222 MPa during pressure increase, the actual rail pressure falls below the target rail pressure. → Replace the SCV.

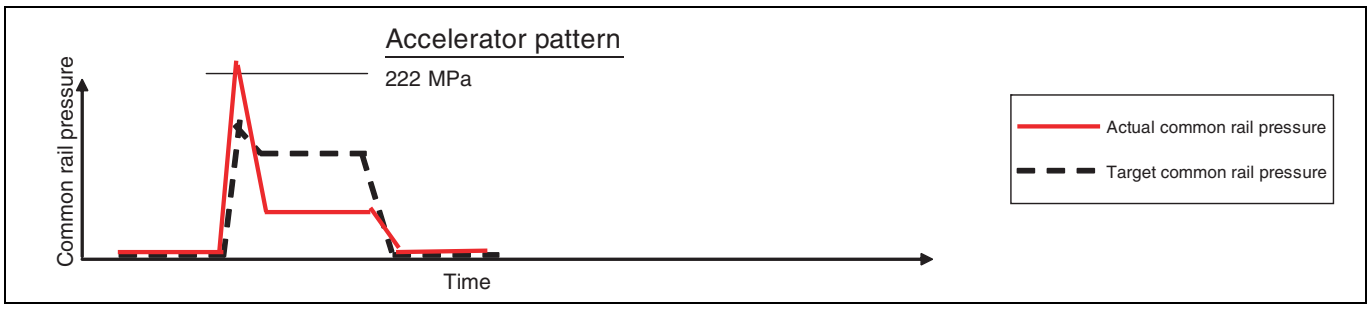


SAPH16F010301228

e. Before the maximum common rail pressure exceeds 222 MPa during pressure increase, the actual rail pressure falls below the target rail pressure rapidly. → Replace the common rail.

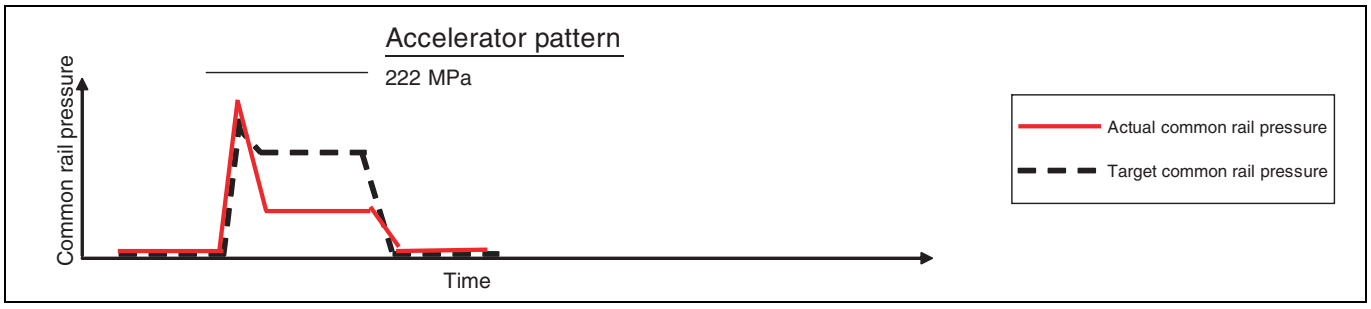


SAPH16F010301229

f. The maximum common rail pressure exceeds 222 MPa during pressure drop. → Check the return pipe.

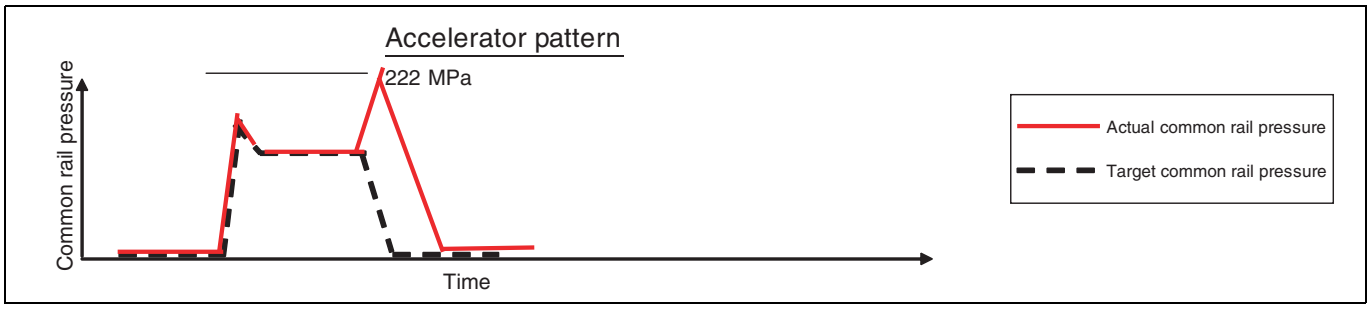


SAPH16F010301230

g. The pressure is disturbed at a given speed and the pressure decreases at higher speed. → Replace the supply pump.

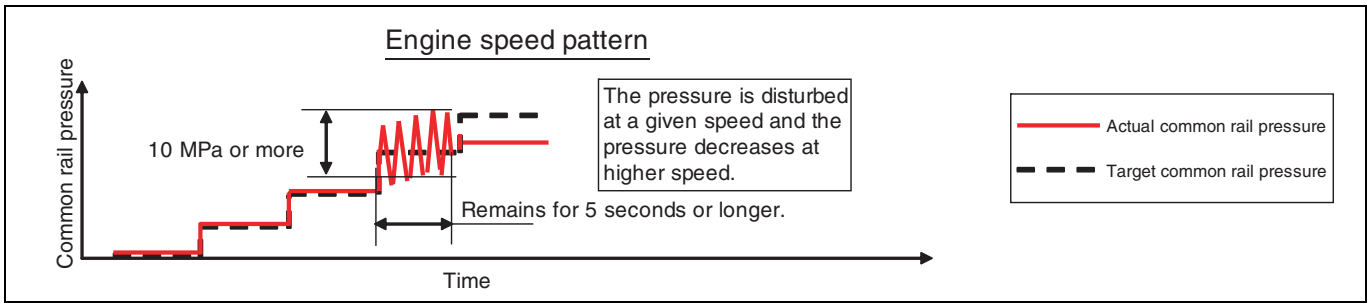


SAPH16F010301231

h. Hunting remains within 10 MPa or more for more than 5 seconds. → Replace the SCV.

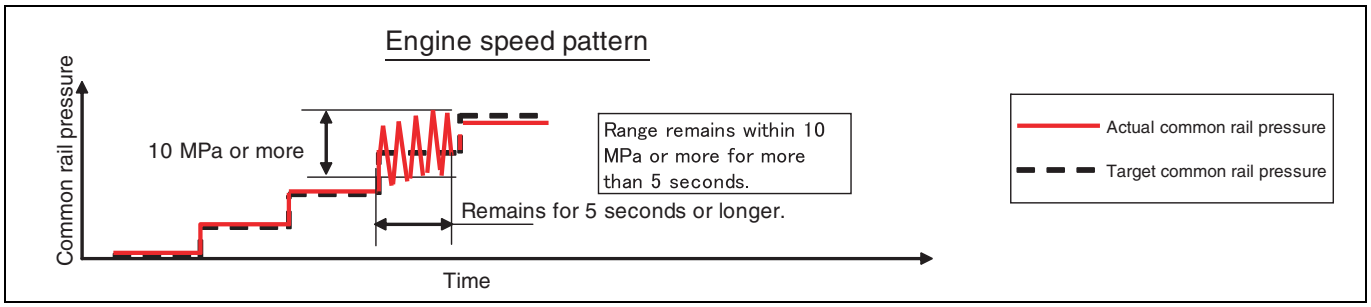


SAPH16F010301232

i. The engine stops during pressure relief. → Replace the SCV.

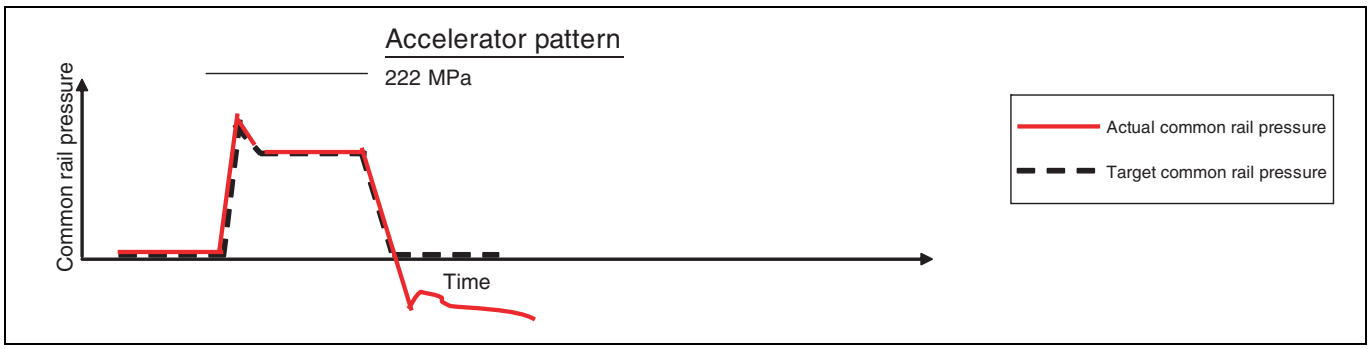


SAPH16F010301233

j. Target common rail pressure during idling deviates from the standard value. → Replace the SCV.

**<FINAL VALUE OF PUMP CURRENT TARGET test>**

1. After engine has reached operating temperature. (more than 82 °C {179.6 °F})
2. After air compressor has completed building pressure.
3. A/C, Head lights are off.
4. All other devices turned off. (PTO, Refrigeration compressor. etc)
5. Engine speed: 750 r/min

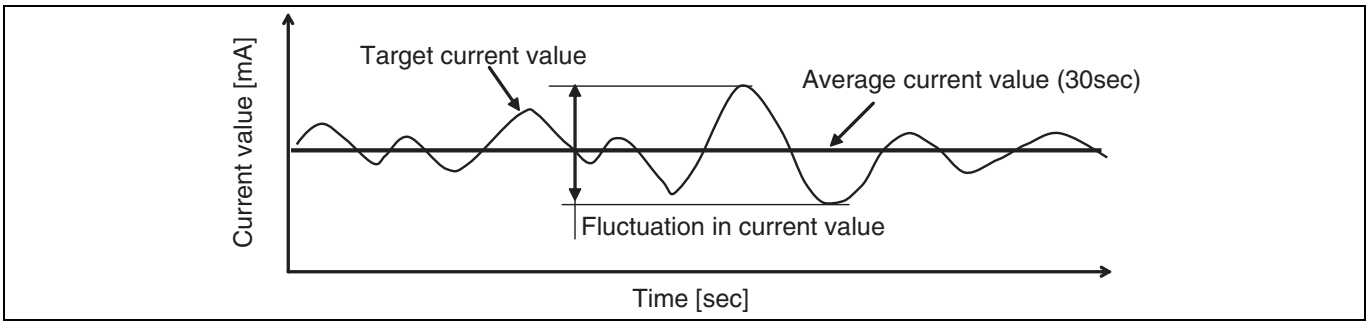


SAPH16F010301234

| Criteria | | |
|---|---|---|
| FINAL VALUE OF PUMP CURRENT TARGET | Average current value | 1,740 ± 80 mA |
| | Fluctuation in current value | < 80 mA |

# DTC: P244B

EN01H16F01030F03001175

## P244B: Incomplete regeneration

INFORMATION

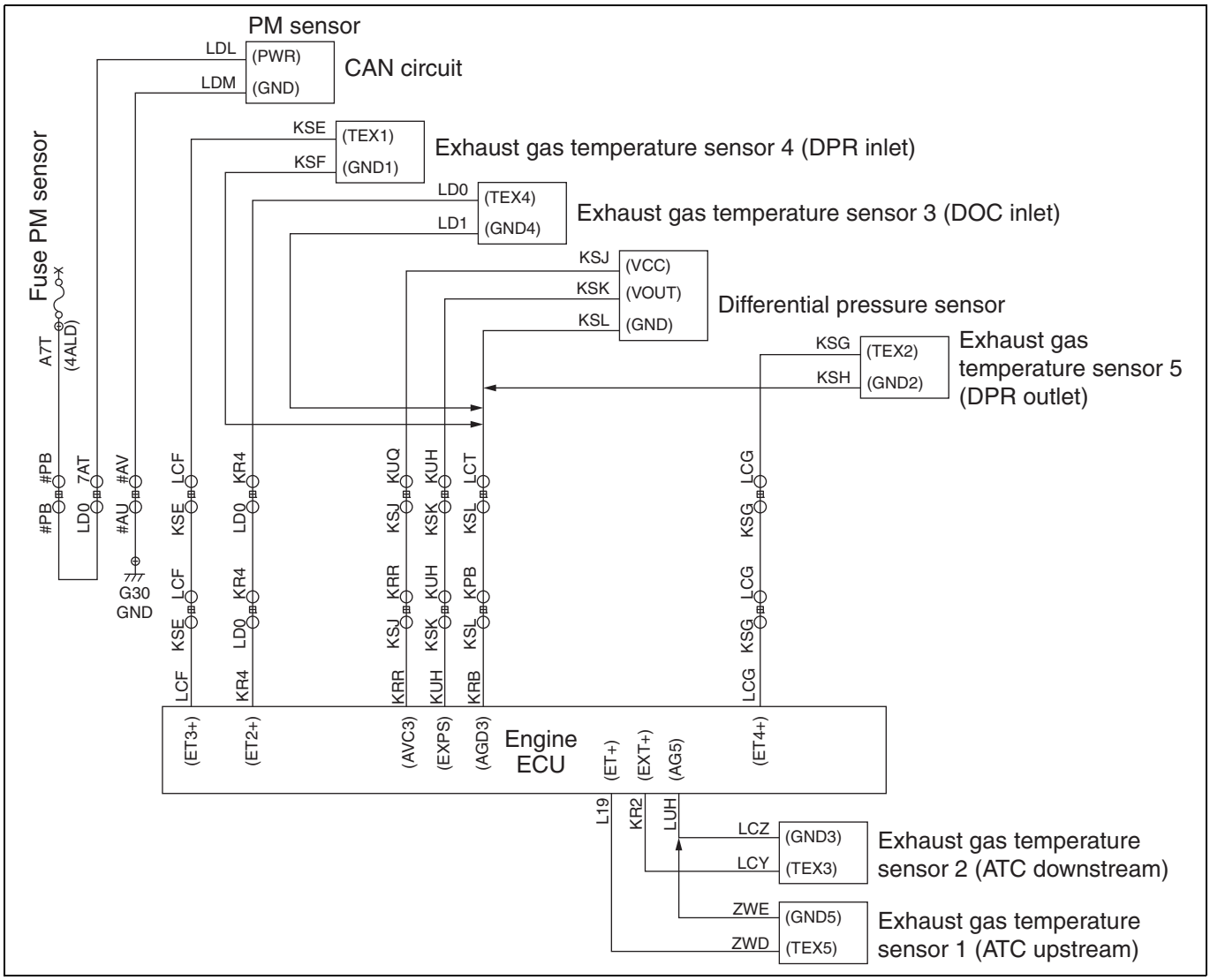


SAPH16F010301235

**1. Technical description**

- The Engine ECU always calculates emitted soot amount from the engine.
- The Engine ECU always calculates accumulated soot amount in DPR.
- Based on accumulated soot amount in DPR, the Engine ECU decides number of DPR soot bar in the dashboard.
- 3-4 soot bars: DPR auto regeneration is required.
- 5-9 soot bars: DPR manual regeneration is required.
- 10 soot bars: Exceeding the limit for DPR regeneration.
- DPR differential pressure value is always monitored by the engine ECU.

**<Description of malfunction>**

- (A) Excessively high DPR differential pressure value.
- (B) Accumulated soot amount in DPR is exceeding the limit for DPR regeneration.

**2. DTC set condition**

- In case of description of malfunction (A)

**(1) DTC detection condition**

- The engine must not be stopped.
- After automatic regeneration.
- Calculated exhaust gas flow quantity of 250 L/s or higher.
- Calculated exhaust gas flow rate integrated value of 51,200 L/s or higher.
- Exhaust brake is inactive.

**(2) Judgment criteria**

- Failure is determined when the value of "differential pressure /exhaust gas flow rate" counted in establishing the judgment criteria is higher than the threshold value.

- In case of description of malfunction (B)

**(1) DTC detection condition**

- The engine must not be stopped.
- DPR regeneration non-completion.

**(2) Judgment criteria**

- Failure is determined when the value of "accumulated soot amount in DPR" exceeded the limit for DPR regeneration.

**3. Reset condition**

- Immediately after normal operation is restored and DPR-related memory is reset.
- DPR must be replaced.

**4. Indication, warning or system control regulation when the DTC is set.**

- MIL: ON
- SVS light: OFF

**5. Symptoms on the vehicle when the DTC is set**

**<Symptoms on the vehicle due to backup control (fail safe function)>**

- –

**<Symptoms on the vehicle due to malfunction>**

- –

**6. Pre-inspection work**

- Check that the battery voltage is in the normal range.

**7. After-inspection work**

- Clear all past DTCs.
- Reset DPR related memory.
- Check that no DTC is detected after test drive.

**8. Estimated failure factors**

**[DPR clogged]**

- The DPR light has continued to blink, but manual regeneration has not been performed.
- The DPR indicator light does not blink.
- Check for a defective meter bulb (with the starter switch set to the "ON" (engine stopped), the indicator lamp in the meter must light).

**[Incomplete regeneration]**

- DPR manual regeneration operation error.
- DPR temperature does not rise and regeneration is incomplete.
  - Exhaust gas temperature sensor (burner outlet): Check if sensing is wrong because of abnormal temperature characteristics.
- Soot remains because of excessive quantity of soot accumulation
  Injector: fuel injection quantity characteristics failure
  SCV: faulty common rail pressure control
  EGR valve: faulty EGR opening control
  Turbocharger: faulty VNT opening control

**[Confirmation points for erroneous judgment]**

**[DPR clogged]**

- The DPR light has continued to blink, but manual regeneration has not been performed. Check the following items, because the regeneration conditions (in the idling status) may not have been met.
  1. Inspection of neutral switch, accelerator switch, and vehicle speed sensor.
  2. Inspection for a wire break of the DPR switch.
  3. No response of the PTO ON signal or the external accelerator signal.

**[Incomplete regeneration]**

- Failure in differential pressure sensor system
  - Differential pressure sensor failure.
  - Check if differential pressure value is wrongly sensed because of damaged hose or wrong connection.
  - Check if sensing is wrong because the exhaust gas pressure sensor pipe is faulty, clogged by foreign substances, or has a hole in it.
- Air flow sensor failure
  Check if sensing is wrong because gas flow quantity calculation is based on abnormal intake air quantity.
- Exhaust gas temperature sensor
  Check if sensing is wrong because gas flow quantity calculation is based on abnormal temperature characteristics.
- Diesel-throttle: Diesel-throttle opening control defective.
- Exhaust brake: Stuck on the closed side

## INSPECTION PROCEDURE [sheet 1]: P244B

| 1 | Check the DTC detected (Engine ECU) [HINO DX II ] |
|---|---|

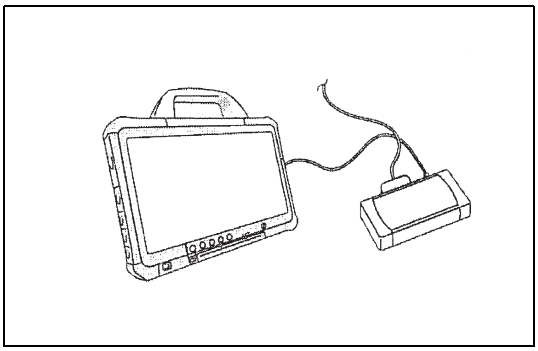

SAPH16F010301236

1. Set the starter switch to the "LOCK" position.
2. Connect the vehicle to HINO DX II .
3. Set the starter switch to the "ON" position.
4. Select [Engine] and check if any DTC other than P244B has been detected.

**Have DTCs other than P244B been detected?**

**YES**

**Go to diagnosis procedure of a related DTC.**

**NO**

**Go to step 2.**

| 2 | Check the DPR soot accumulation quantity [HINO DX II ] |
|---|---|

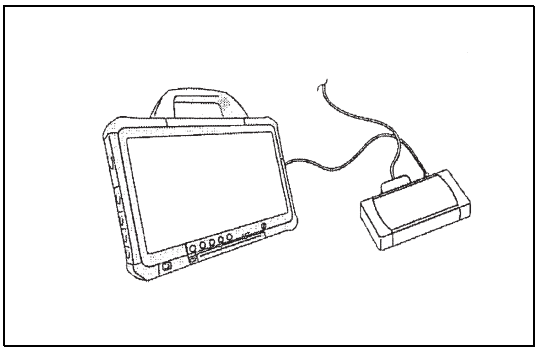

SAPH16F010301237

1. Check [DPR deposit volume] from [DX Report] to read the DPR soot accumulation quantity.
   -HINO DX II selection items: [Past work information] / (VIN of the relevant vehicle) / [Open] / [Print] / [Vehicle data] / [Print]

**NOTICE**
**For the P244B code, there are two types of DTC detection conditions. The inspection method depends on these conditions. Check that the amount of soot deposited from HINO DX II report, and operate using the method that matches the detection condition.**

- **If the amount of deposited soot is less than 5.0 g/L, check "Sheet 1".**
- **If the amount of deposited soot is more than 5.0 g/L, check "Sheet 2".**

**Is the amount of soot in the DPR less than 5.0 g/L?**

**YES**

**Go to step 3.**

**NO**

**Perform "Sheet 2" diagnosis.**

| 3 | Check the DPR filter |
|---|---|



Damage

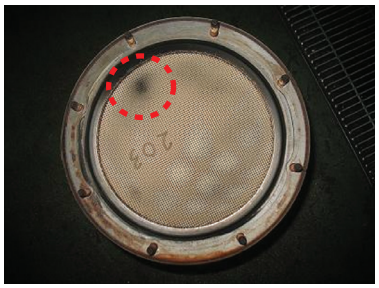

Soot leakage

SAPH16F010301238

1. Remove DPR filter and check that there is no soot leaking at the rear edge of the DPR filter, no damage, and no other abnormality.

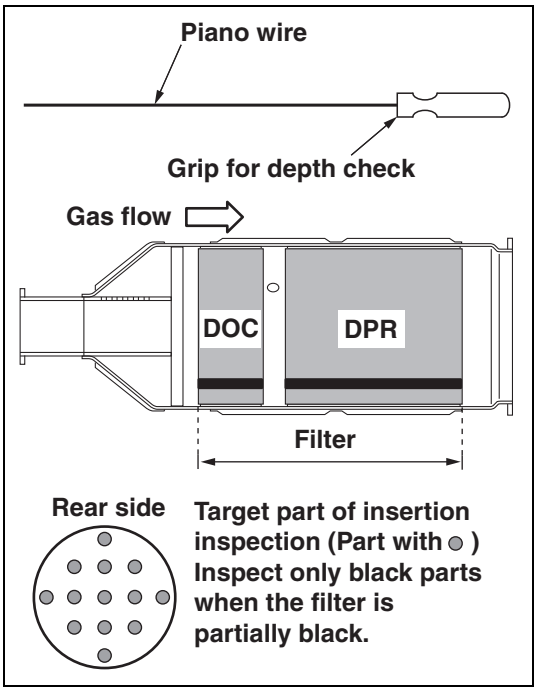


SAPH16F010301239

2. Insert the check probe from the rear surface to inspect the inside.

3. Check probe inserting depth.

| Standard values |
|---|
| 175 - 185 mm {6.890 - 7.283 in.} |

**Was any failure found?**

| YES | NO |
|---|---|
| **Replace the DPR filter and the PM sensor. Go to step 7 after replacement.** | **Go to step 4.** |

| 4 | **Inspect the differential pressure sensor (exhaust gas pressure sensor) unit** |
|---|---|

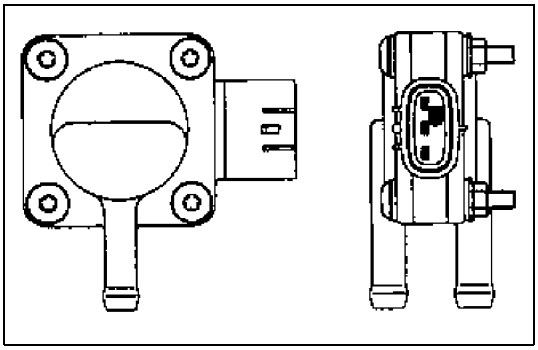

SAPH16F010301240

1. Disconnect the differential pressure sensor connector.
2. Use the electrical tester to measure the resistance between the terminals of the differential pressure sensor.

| Measurement conditions | Tester connections | Standard values |
|---|---|---|
| **Starter switch: LOCK** | **Differential pressure sensor connector VCC – GND VOUT – GND** | **2 – 15 kΩ** |

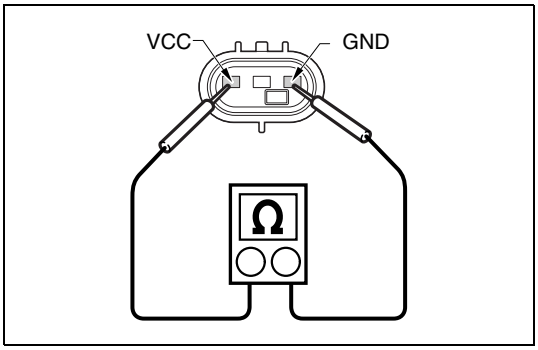


SAPH16F010301241

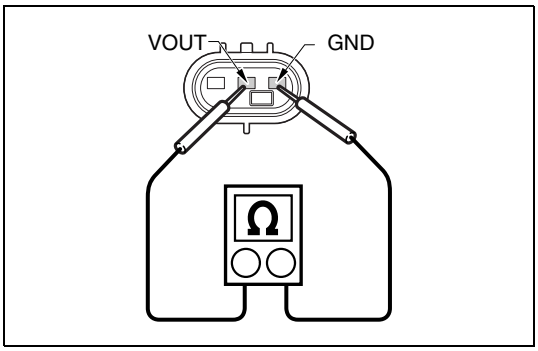


SAPH16F010301242

**Are the measurements within standard value?**

**YES**

**Go to step 5.**

**NO**

**Replace the differential pressure sensor (exhaust gas pressure sensor).**
**Perform "After-inspection work" of INFORMATION section.**

## 5 Inspect the differential pressure sensor pipe

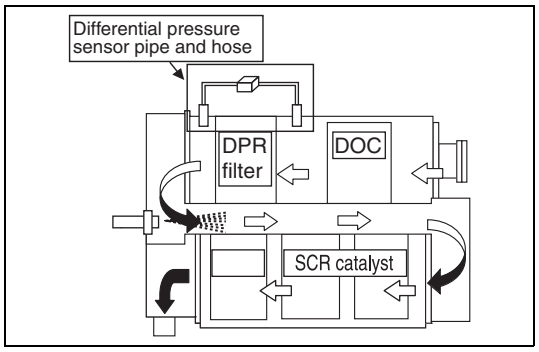


SAPH16F010301243

1. Inspect differential pressure sensor pipe for clogging, cracks, and other damage.

**Was any failure found?**

**YES**

**Repair (cleaning) or replace differential pressure sensor pipe.**
**Perform "After-inspection work" of INFORMATION section.**

**NO**

**Go to step 6.**

## 6 Inspect the differential pressure sensor hose

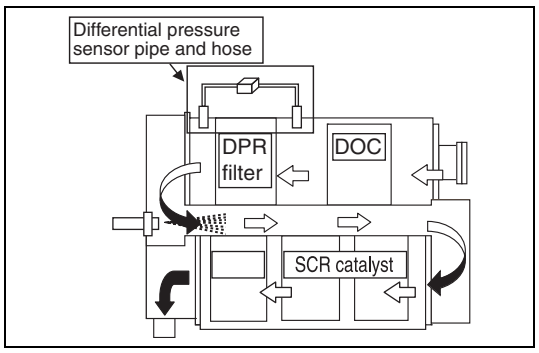


SAPH16F010301244

1. Inspect the differential pressure sensor hose for clogging, cracks, and other damages.

**Was any failure found?**

| YES | NO |
|---|---|
| **Repair (cleaning) or replace differential pressure sensor hose.<br>After replacement, perform DPR forced regeneration.<br>Perform "After-inspection work" of INFORMATION section.** | **Perform DPR forced regeneration.<br>Procedure complete.<br>Perform "After-inspection work" of INFORMATION section.** |

| 7 | Perform an engine basic inspection |
|---|---|

1. Inspect the engine parts and systems based on the Engine basic inspection sheet.

**HINT**
**Inspect each system of the engine for anything that may aggravate the exhaust gas properties.**

**Was any failure found?**

| YES | NO |
|---|---|
| **Repair or replace the faulty part. If the air flow sensor is defective, go to step 8.** | **Go to step 8.** |

| 8 | Inspect the air flow sensor [HINO DX II ] |
|---|---|

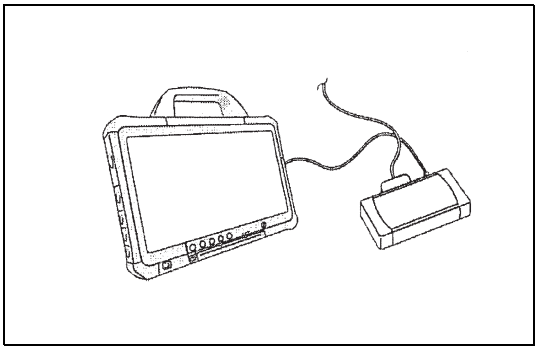

SAPH16F010301245

1. Set the starter switch to the "LOCK" position.
2. Inspect the connection of the air flow sensor's connector (mating, poor contact).
3. Replace the air flow sensor to the new one.
4. Set the starter switch to the "ON" position.
5. Select [Engine] on HINO DX II menu.
6. Select [Amount of intake air flow inspection] from [Inspection Menu], and check that the characteristic air flow sensor performance error does not exceed 10 % compare with new and old sensors.

| Standard values |
|---|
| Performance error: less than 10 % |

**Do the measurements meet the standard value?**

| YES | NO |
|---|---|
| **Go to step 9.** | **Replace the air flow sensor.<br>Perform "After-inspection work" of INFORMATION section.** |

| 9 | Inspect injector [HINO DX ll ] |
|---|---|

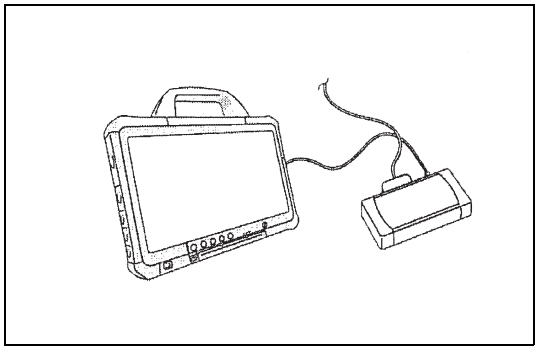

SAPH16F010301246

Check the injection quantity.

1. Start the engine.
2. Select [Injection quantity] from the [Data monitor Setting] menu and measure the amount of fuel consumption.

| Measurement conditions |
|---|
| **Engine speed: 2,500 r/min No-load,<br>T/M shift lever: Neutral position, A/C off and Air compressor non operating.<br>Engine coolant temperature: more than 80 °C {176 °F}** |

| Standard values |
|---|
| **Q ($mm^3$/st) = 9.0 q ≤** |

**Do the measurement meet the standard value?<br>(Do the injection volume meet the standard value?)**

| YES | NO |
|---|---|
| **Go to step 10.** | **Replace the injector.<br>Perform "After inspection work" of INFORMATION SECTION.** |

| 10 | Inspect injector [HINO DX ll ] |
|---|---|

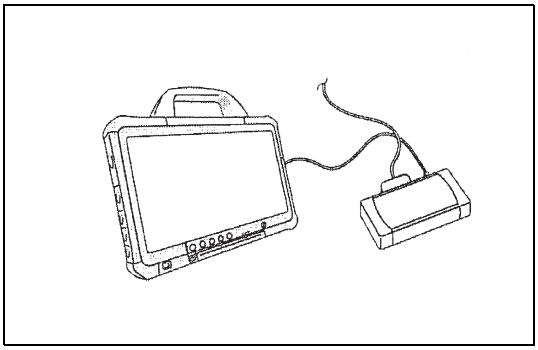

SAPH16F010301247

Check the Δboost pressure.

1. Start the engine.
2. Select [Injection quantity], [Engine revolution], [Atmospheric pressure], [Intake air pressure] from the [Data monitor Setting] menu and measure the Δboost pressure (See [Reference1]).
3. Δboost pressure = [Intake air pressure] - Target boost pressure
   *Target boost pressure and Δboost pressure will be calculated automatically if a txt file is read on the Excel macro (See [Reference2]).

| Measurement conditions |
|---|
| **Under test running which a shift lever is fixed by 5th.?(Vehicle Speed = about 60 mile/h)**<br>**Engine revolution: 2,400 - 2,600 r/min**<br>**Injection quantity: 40 - 60 $mm^3$/st**<br>**A/C off and Air compressor un-operating.**<br>**Engine coolant temperature: more than 80°C {176 °F}**<br>**Atmospheric pressure: more than 95 kPa**<br>**Intake air temp.?(Air flow meter): more than 10 °C {50 °F}** |

| Standard values |
|---|
| **Δboost pressure < 20 kPa** |

**Do the measurement meet the standard value?**
**(Do the Δboost pressure meet standard value?)**

**YES**

**You forgot to press the DPR switch.**
**After DPR manual regeneration, the diagnosis procedure will be complete.**
**Perform "After-inspection work" of INFORMATION section.**

**NO**

**Replace the injector.**
**Perform "After inspection work" of INFORMATION SECTION.**

## [Reference 1]

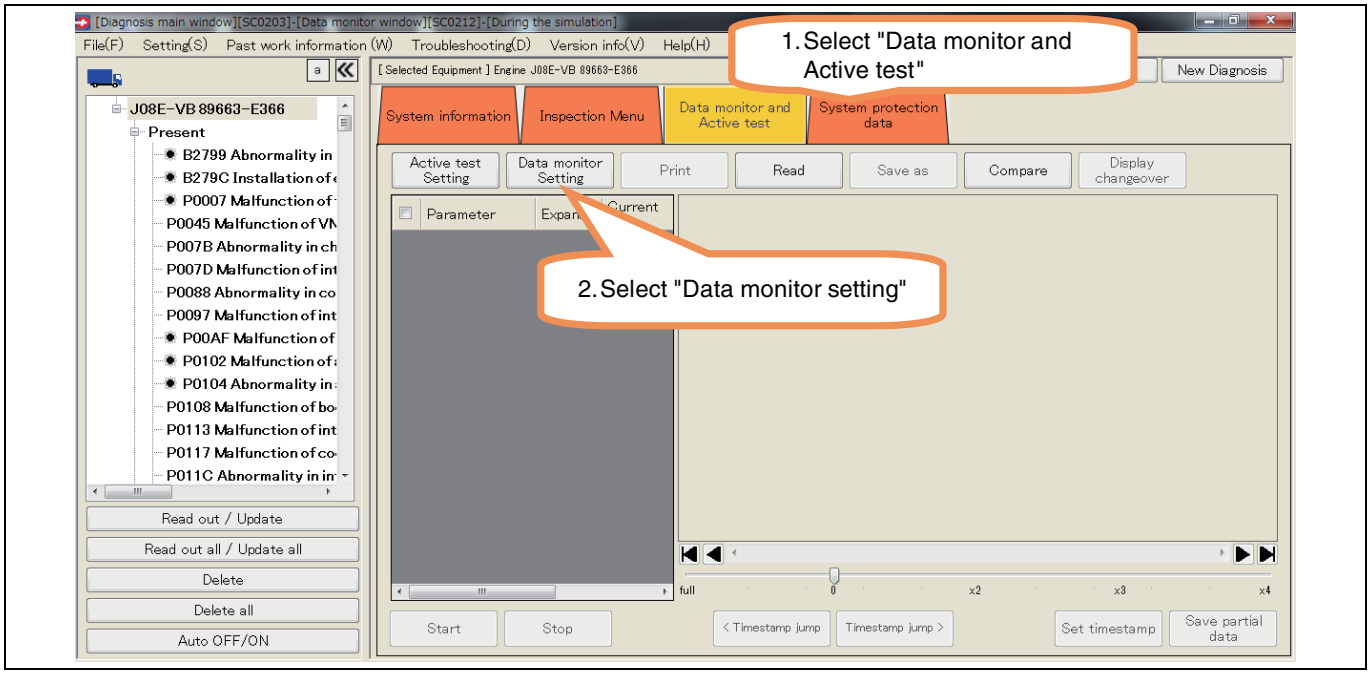


SAPH16F010301248

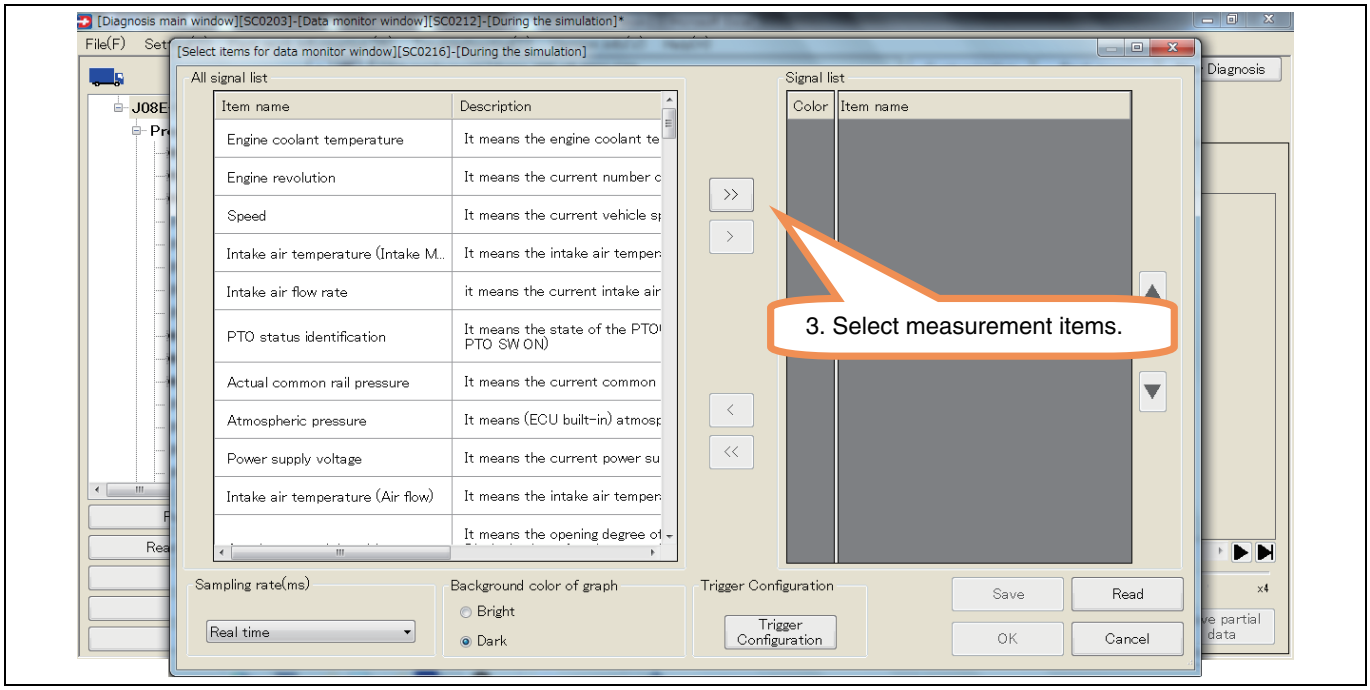


SAPH16F010301249

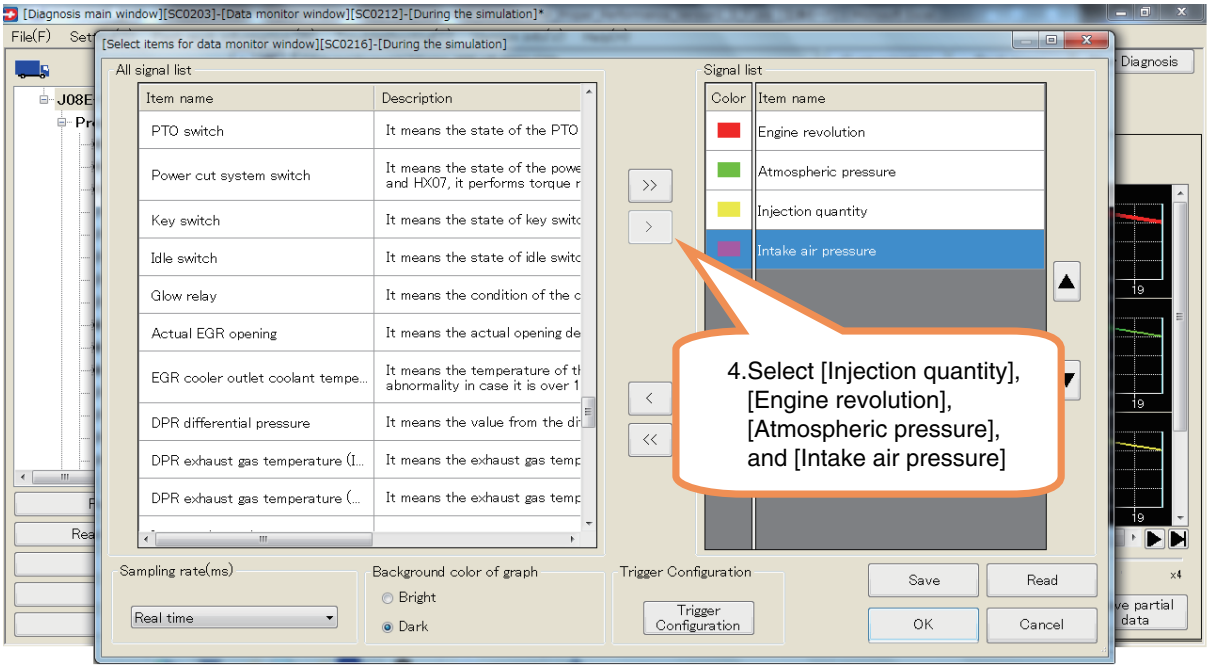


SAPH16F010301250

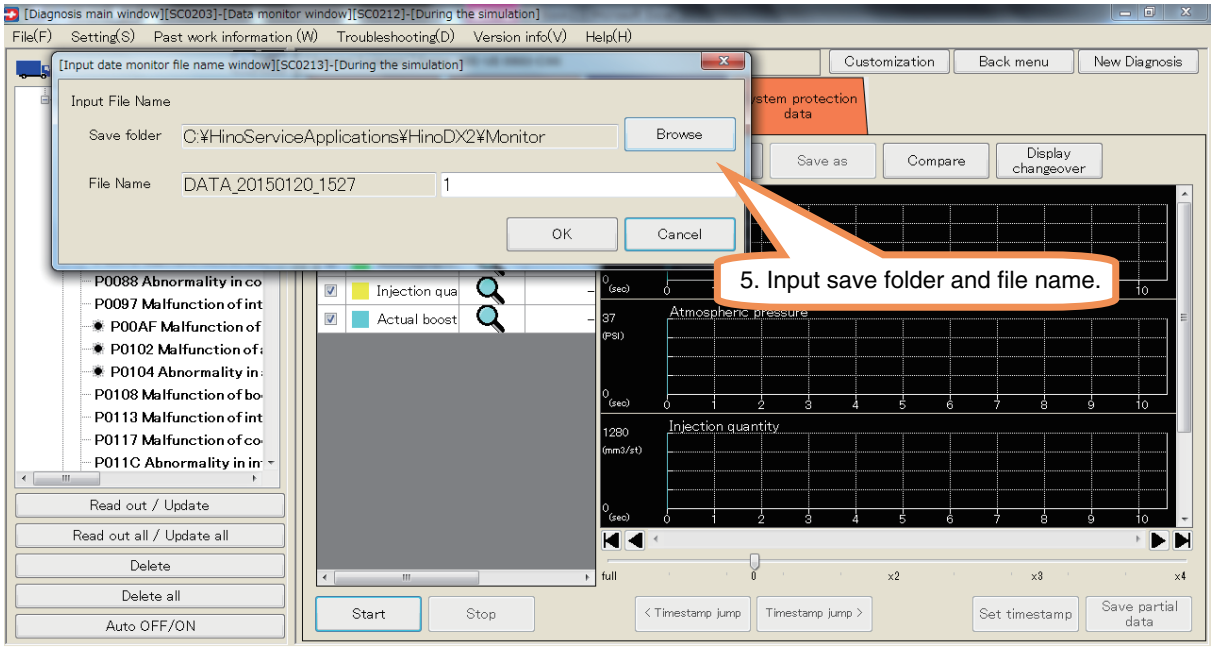


SAPH16F010301251

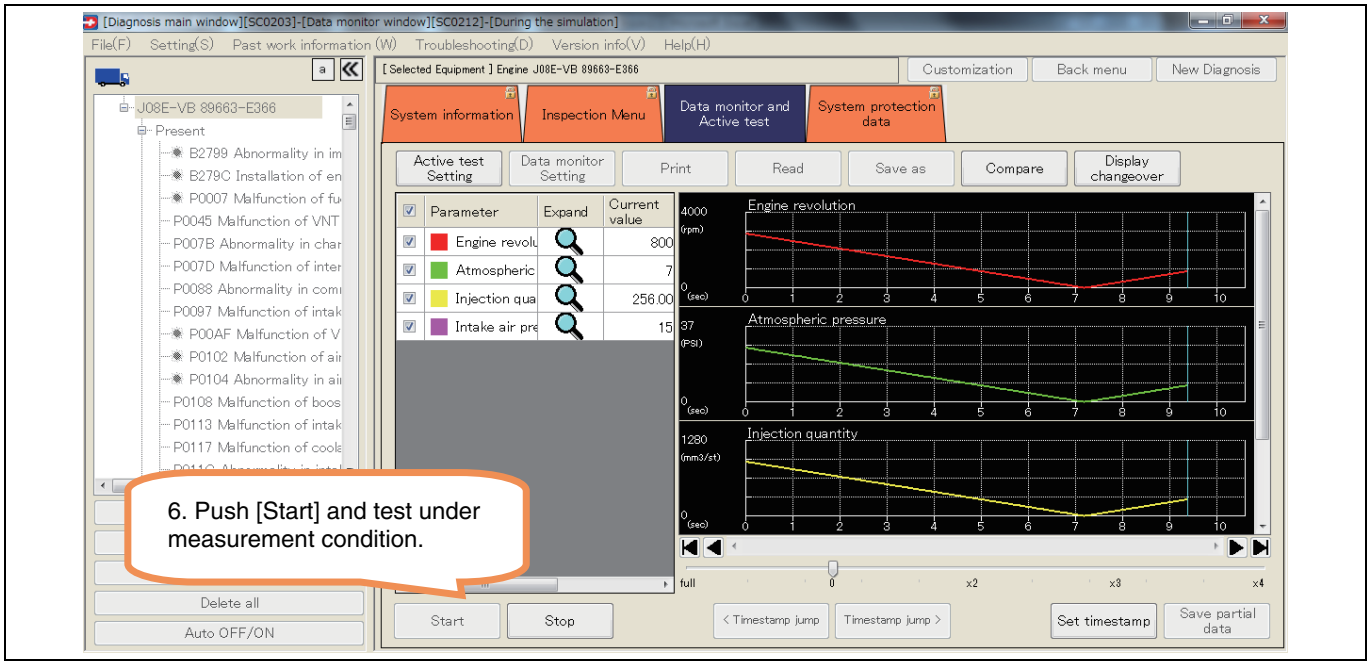


SAPH16F010301252

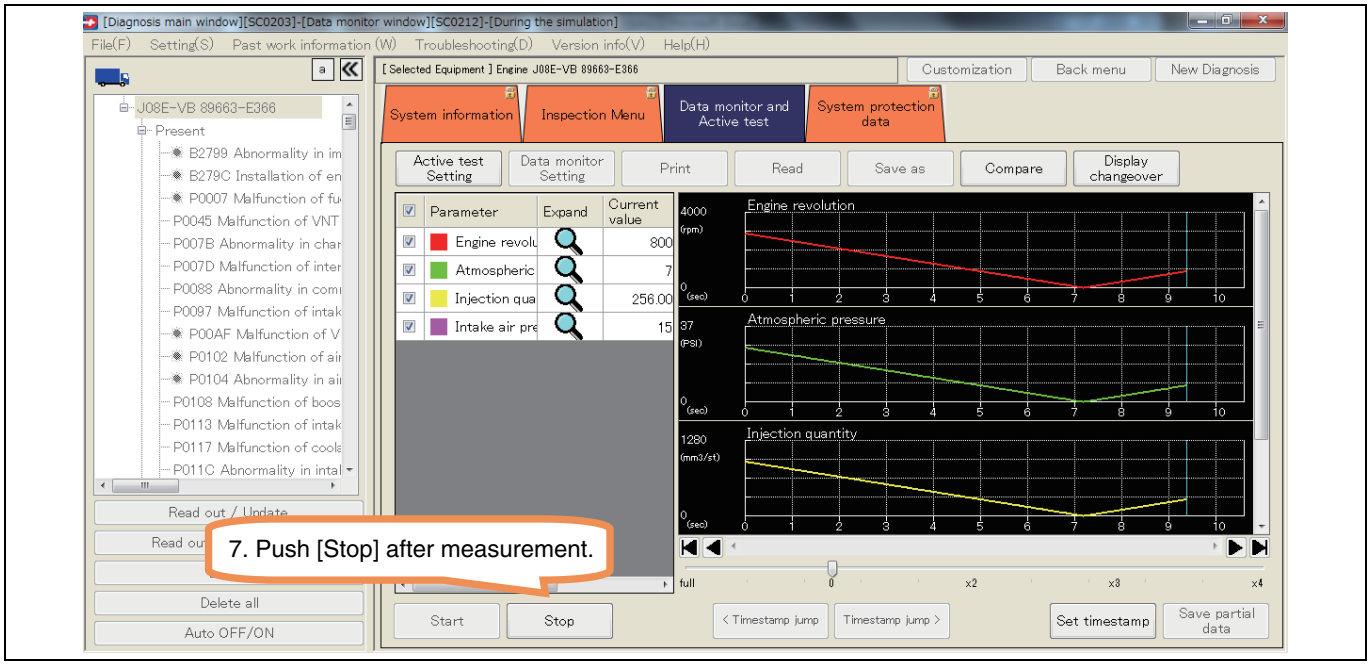


SAPH16F010301253

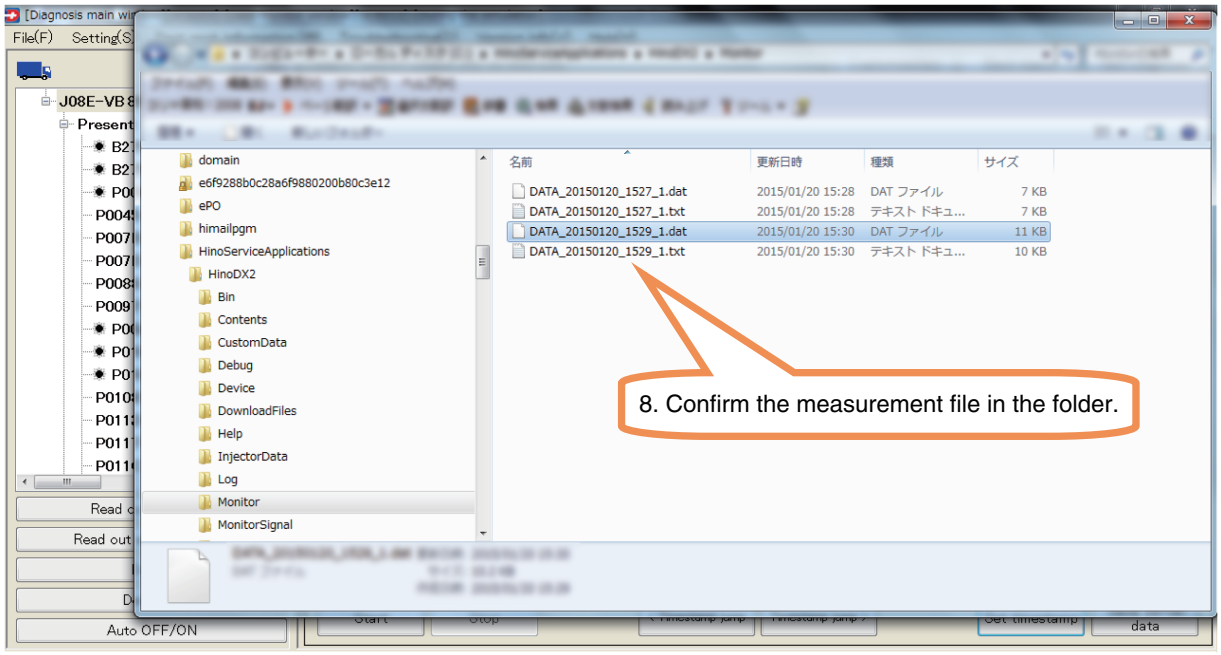


SAPH16F010301254

## [Reference 2] How to use the diagnosis Excel macro

1. **Open the Excel file (enable macros).**

2. **Select the MY of the vehicle to be diagnosed.**

3. **Select and open the data indicated by DX II → The data are analyzed and the result appears on the "RESULT" sheet. (No problem found in case of PASS; replace the injector in case of FAIL.)**

4. **To end the analysis, close the Excel file. To continue the analysis, return to "Sheet1" and select Data Clear.**

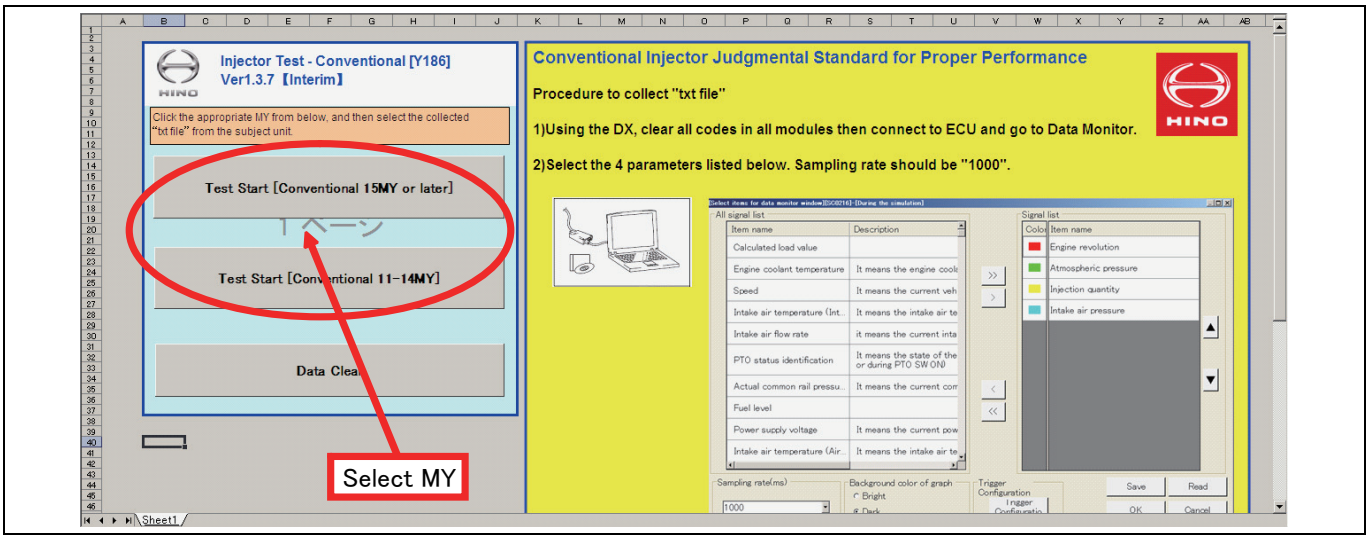


SAPH16F010301255

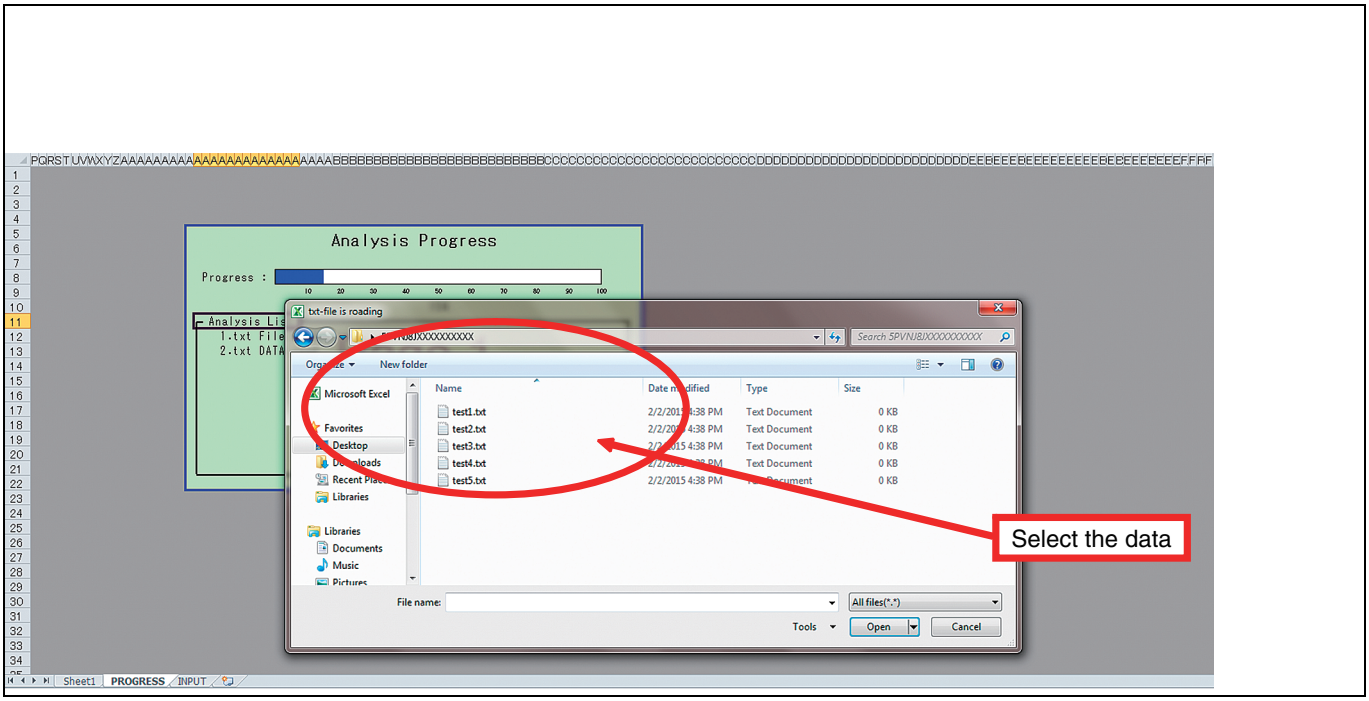


SAPH16F010301256

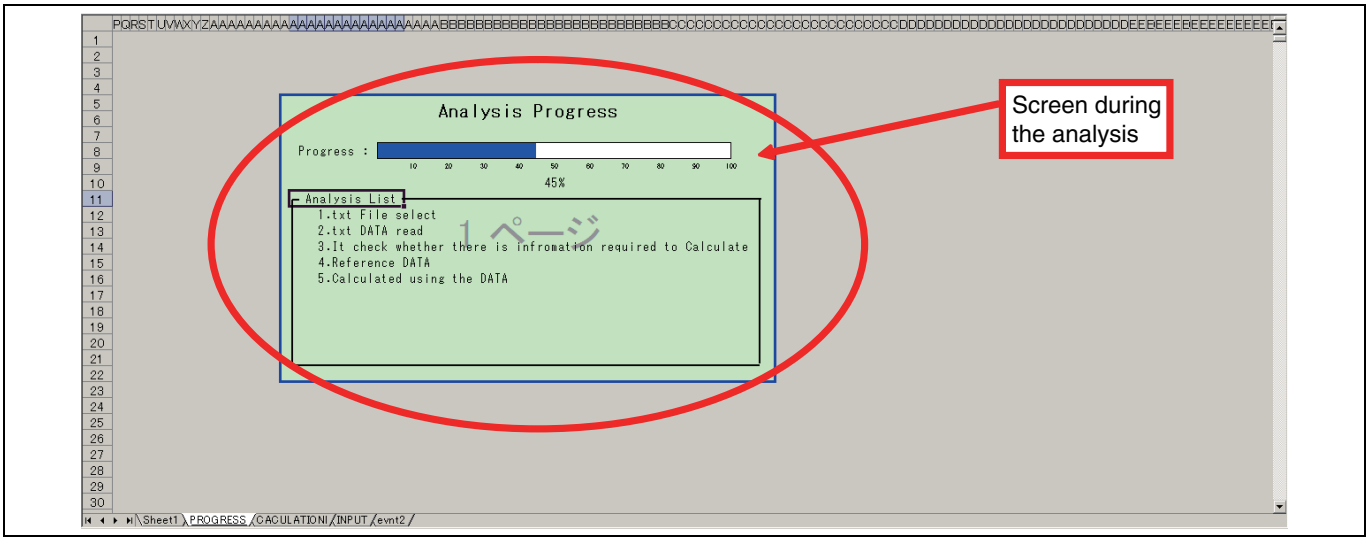


SAPH16F010301257

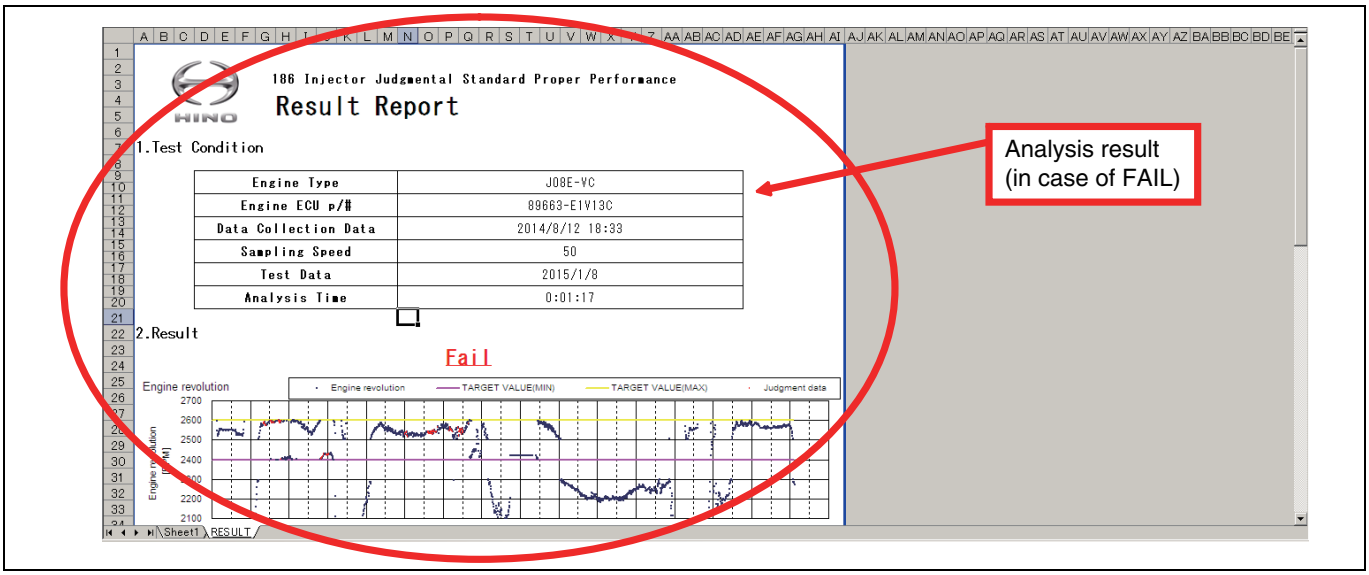


SAPH16F010301258

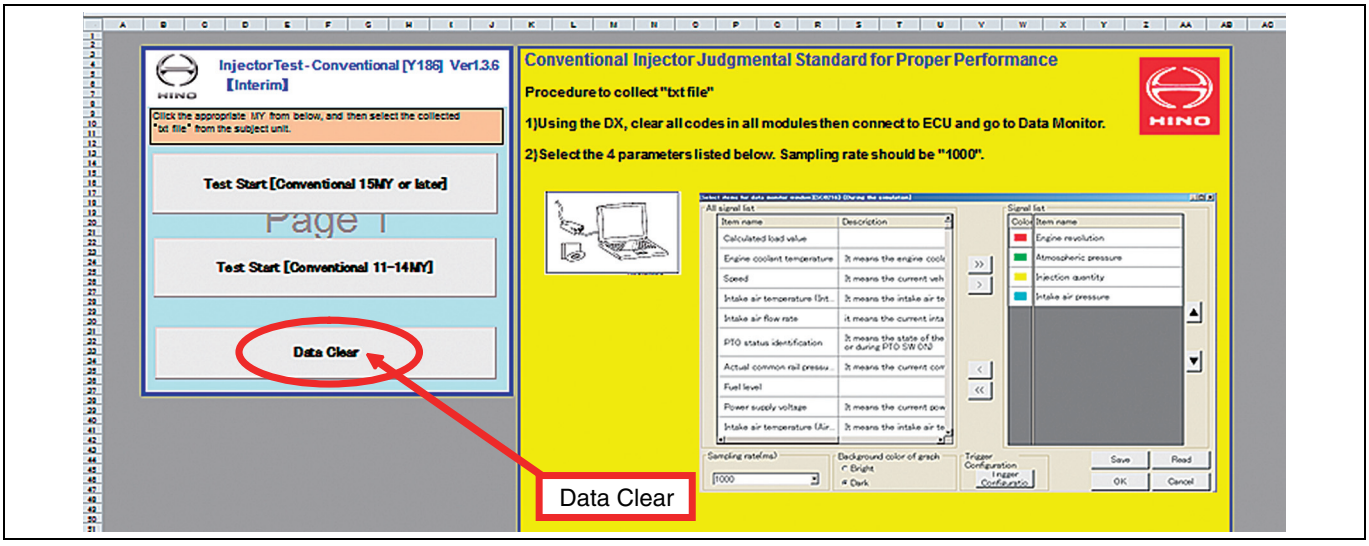


SAPH16F010301259

## INSPECTION PROCEDURE [sheet 2]: P244B

| 1 | Check the DTC detected (Engine ECU) [HINO DX II ] |
|---|---|

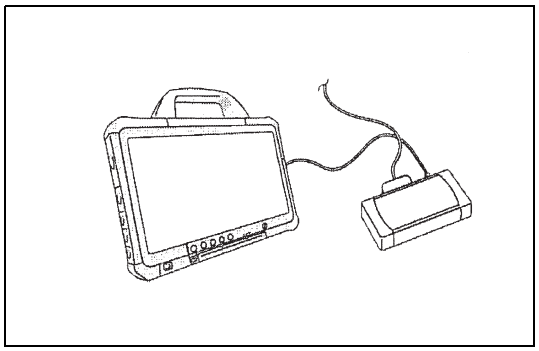

SAPH16F010301260

1. Set the starter switch to the "LOCK" position.
2. Connect the vehicle to HINO DX II .
3. Set the starter switch to the "ON" position.
4. Select [Engine] and check if any DTC other than P244B has been detected.

**Have DTCs other than P244B been detected?**

**YES**

**Go to the diagnosis procedure of a related DTC.**

**NO**

**Go to step 2.**

| 2 | Check the DPR soot accumulation quantity |
|---|---|

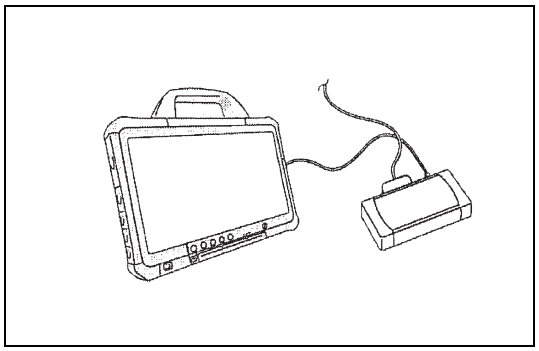

SAPH16F010301261

1. Check [DPR deposit volume] from [DX Report] to read the DPR soot accumulation quantity.
   -HINO DX II selection items: [Past work information] / (VIN of the relevant vehicle) / [Open] / [Print] / [Vehicle data] / [Print]

**NOTICE**

**For the P244B code, there are two types of DTC detection conditions. The inspection method depends on these conditions. Check that the amount of soot deposited from HINO DX II report, and operate using the method that matches the detection condition.**

- **If the amount of deposited soot is less than 5.0 g/L, check "Sheet 1".**
- **If the amount of deposited soot is more than 5.0 g/L, check "Sheet 2".**

**Is the amount of soot more than 5.0 g/L?**

**YES**

**Go to step 3.**

**NO**

**Perform "Sheet 1" diagnosis.**

| 3 | DPR manual regeneration |
|---|---|

1. Perform DPR manual regeneration, and check succeeded.

**Was DPR regeneration succeeded?**

**YES**

- **Replace the DPR filter and the PM sensor.**
- **After DPR manual regeneration, the diagnosis procedure will be complete.**

**Perform "After-inspection work" of INFORMATION section.**

**NO**

**Go to step 4.**

| 4 | Inspect DPR manual regeneration switch (DPR switch) |
|---|---|

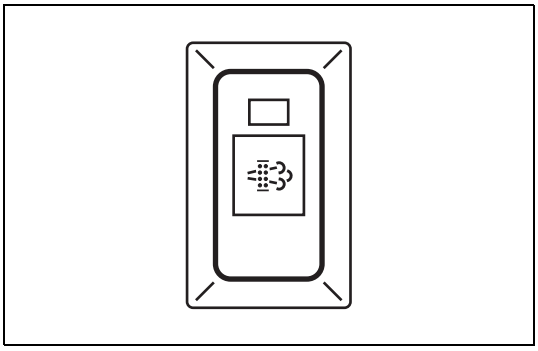

SAPH16F010301262

1. Inspect the DPR switch connector (mating, poor contact).
2. Inspect the switch unit.
3. Inspect the harness for disconnections and short-circuits.

**Was any failure found?**

**YES**

**Repair or replace the faulty parts.**
**Replace the DPR filter and the PM sensor.**
**After DPR manual regeneration, the diagnosis procedure will be complete.**
**Perform "After-inspection work" of INFORMATION section.**

**NO**

**Go to step 5.**

| 5 | Inspect DPR indicator light |
|---|---|

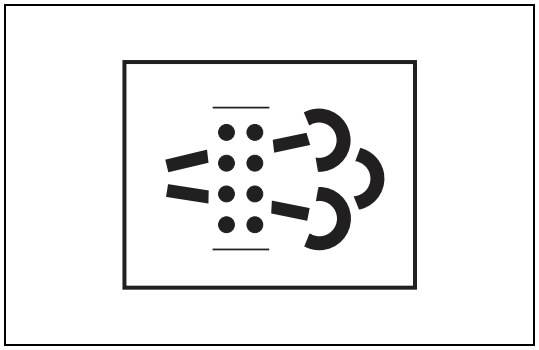

SAPH16F010301263

1. Inspect the combination meter connector (mating, poor contact).
2. Check for broken bulb.
3. Inspect the harness for disconnections and short-circuits.

**Was any failure found?**

**YES**

- **Repair or replace the faulty part.**
- **Replace the DPR filter and the PM sensor.**
- **After DPR manual regeneration, the diagnosis procedure will be complete.**

**Perform "After-inspection work" of INFORMATION section.**

**NO**

**Go to step 6.**

| 6 | Inspect the neutral switch |
|---|---|

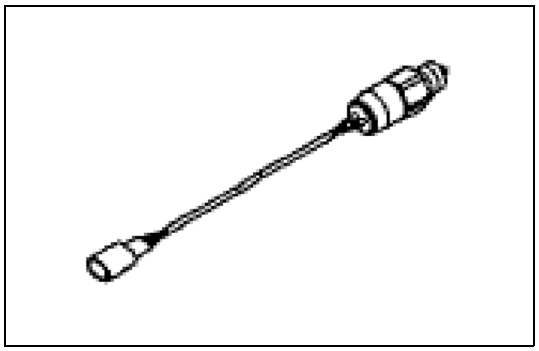

SAPH16F010301264

1. Inspect the neutral connector (mating, poor contact).
2. Inspect the switch unit.
3. Inspect the harness for disconnections and short-circuits.

**Was any failure found?**

**YES**

- **Repair or replace the faulty part.**
- **Replace the DPR filter and the PM sensor.**
- **After DPR manual regeneration, the diagnosis procedure will be complete.**

**Perform "After-inspection work" of INFORMATION section.**

**NO**

**Go to step 7.**

| 7 | Check the accelerator unit |
|---|---|

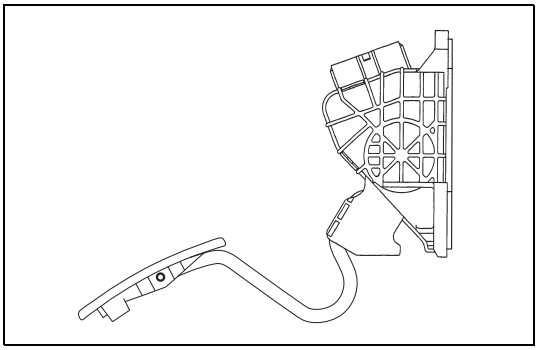

SAPH16F010301265

1. Check the accelerator unit.
2. Check there is no disconnections or short-circuits.

**Was any failure found?**

**YES**

- **Repair or replace the faulty part.**
- **Replace the DPR filter and the PM sensor.**
- **After DPR manual regeneration, the diagnosis procedure will be complete.**

**Perform "After-inspection work" of INFORMATION section.**

**NO**

**Go to step 8.**

| 8 | Inspect the external accelerator signal [HINO DX II ] |
|---|---|

1. Set the starter switch to the "ON" position.
2. Select [Engine] on HINO DX II .
3. Select [PTO accelerator sensor opening] and [PTO accelerator sensor voltage] from the [Data monitor Setting] menu, and check that you do not have a sensor signal output of more than 5 % when the accelerator sensor is at 0 % position (Accelerator pedal not operated).

**Was any failure found?**

**YES**

- **Check the external accelerator sensor. Repair if necessary.**
- **Replace the DPR filter and the PM sensor.**
- **After DPR manual regeneration, the diagnosis procedure will be complete.**

**Perform "After-inspection work" of INFORMATION section.**

**NO**

**Go to step 3.**

# DTC: P2457

EN01H16F01030F03001176

## P2457: EGR cooler performance

INFORMATION

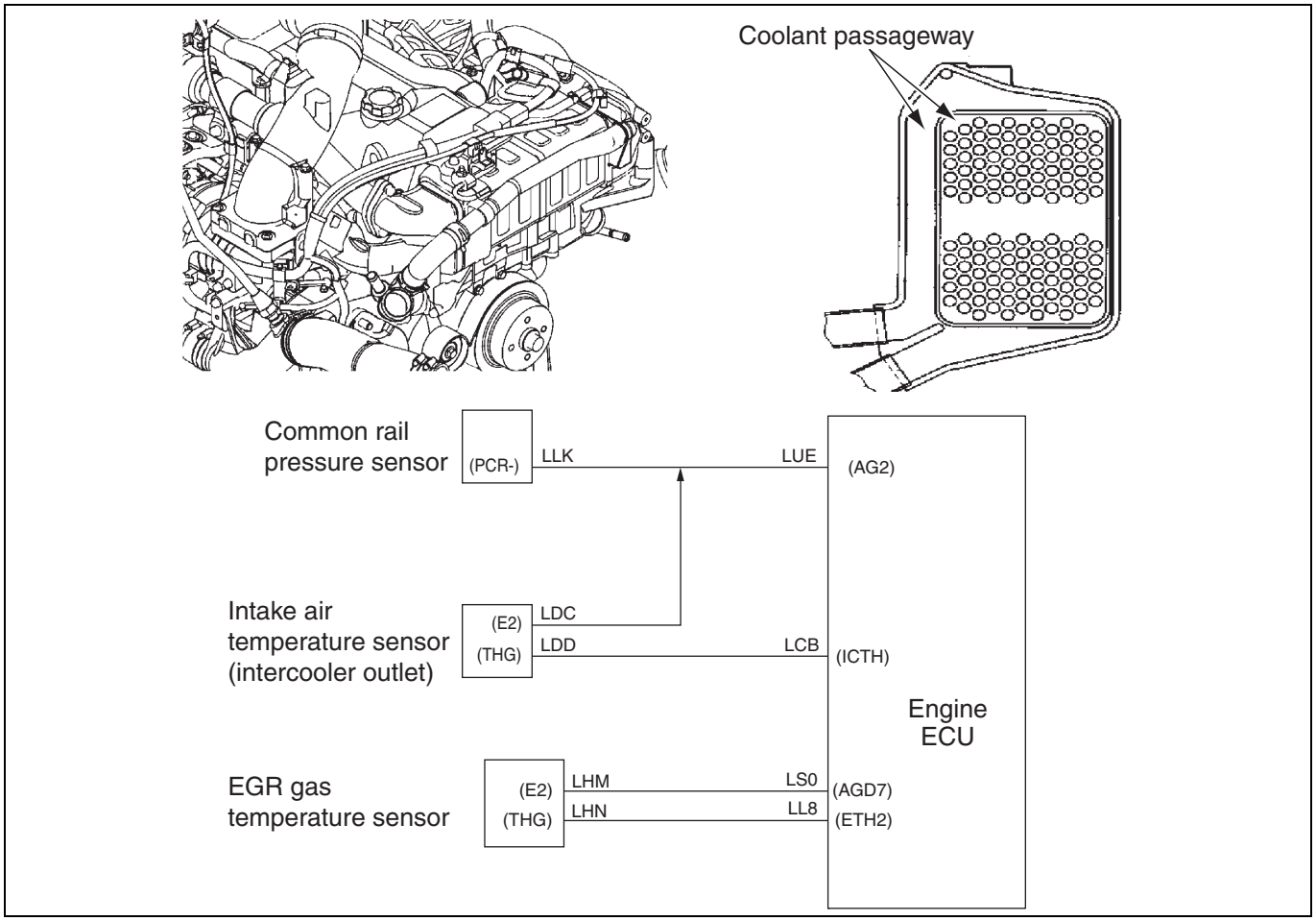


SAPH16F010301266

**1. Technical description**

- The engine ECU detects abnormally high EGR gas temperatures by means of the EGR cooler outlet gas temperature sensor.

**<Description of malfunction>**

- The EGR cooler efficiency has dropped.

**2. DTC set condition**

(1) DTC detection condition

- Engine revolution is more than 1,500 r/min.
- Fuel injection quantity ≥ 40 $mm^3$/st. cyl.
- Battery voltage is in the range of 10 V to 16 V.
- Engine speed fluctuation < 156 r/min.
- Fuel injection quantity fluctuation < 87 $mm^3$/st. cyl.
- Atmospheric pressure ≥ 75 kPa {10.8 psi}
- Vehicle speed ≥ 21 km/h {13 mph}.
- Intake quantity ≥ 75 g/sec.
- Intake temperature sensor (with built-in air flow sensor) is at least -10 °C {14 °F}.

The above conditions continue for at least 40 seconds.

(2) Judgment criteria
- The calculated EGR cooler efficiency, which is derived from the engine speed, fuel injection rate, EGR gas outlet temperature, and coolant temperature, does not exceed 65 %. And:
- The calculated intercooler efficiency, which is derived from the intake temperature sensor, boost pressure sensor, intake air temperature sensor (intercooler outlet), and atmospheric pressure sensor, exceeds 45 – 65 % (for vehicle speeds 21 and 40 km/h {13 and 25 mph}). And:
- The difference among the estimated EGR quantity calculated from the engine speed and fuel injection rate, the estimated intake manifold temperature calculated from the EGR gas outlet temperature sensor and intake air temperature sensor (intercooler outlet), and the value of the intake air temperature sensor (intake manifold) are within 40 °C {104 °F} (when EGR quantity is 40 %).

**3. Reset condition**
- Just after restoration to normal condition.

**4. Indication, warning or system control regulation when the DTC is set.**
- MIL: ON
- SVS light: OFF

**5. Symptoms on the vehicle when the DTC is set**

**<Symptoms on the vehicle due to backup control (fail safe function)>**
- –

**<Symptoms on the vehicle due to malfunction>**
- Insufficient output or engine stall because of DPR filter clogging due to abnormal soot buildup

**6. Pre-inspection work**
- Check that the battery voltage is in the normal range.

**7. After-inspection work**
- Clear all past DTCs.
- Check that no DTC is stored after test drive.

**8. Estimated failure factors**

**EGR cooler outlet gas temperature sensor:**
- Sensor failure

**Circuit supplying coolant to EGR cooler:**
- Coolant leakage from coolant circuit
- Air incursion due to improper air venting

**EGR cooler:**
- Air incursion due to improper air venting
- Coolant leakage from EGR cooler
- Deformation of EGR cooler coolant passageway
- Obstruction due to soot buildup in inlet/outlet of EGR gas passageway
- Obstruction due to buildup of foreign substances in coolant passageway of EGR cooler.

**EGR valve malfunction**
**Diesel throttle valve malfunction**
**SCV malfunction**
**Injector malfunction**

## INSPECTION PROCEDURE: P2457

**1 Inspect the EGR cooler outlet gas temperature sensor connector**

1. Check the connection of the EGR cooler outlet gas temperature sensor connector (Looseness and poor contact).

**Was any failure found?**

**YES**

**Connect securely, repair if needed.**
**Perform "After-inspection work" of INFORMATION section.**

**NO**

**Go to step 2.**

**2 Inspect the EGR cooler outlet gas temperature sensor**

1. Check the installation of the EGR cooler outlet gas temperature sensor.
2. Make sure there is no dirt or damage to the EGR cooler outlet gas temperature sensor.

**Was any failure found?**

**YES**

**Clean the EGR cooler outlet gas temperature sensor and install it properly.**
**If damaged, replace the EGR cooler outlet gas temperature sensor.**
**Perform "After-inspection work" of INFORMATION section.**

**NO**

**Go to step 3.**

**3 Inspect the EGR cooler outlet gas temperature sensor unit**

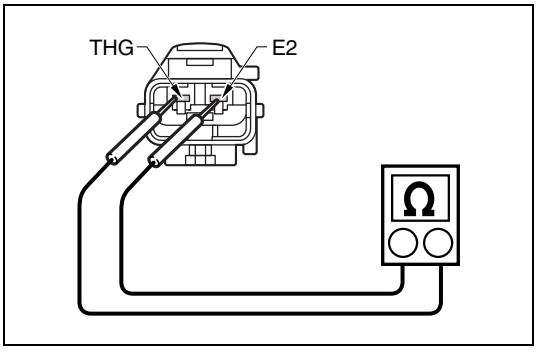


SAPH16F010301267

1. Set the starter switch to the "LOCK" position.
2. Disconnect the EGR cooler outlet gas temperature sensor.
3. Use the electrical tester to measure the resistance between the terminals of the EGR cooler outlet gas temperature sensor.

| Measurement conditions | Tester connections | Standard values |
|---|---|---|
| Starter switch: LOCK | EGR cooler outlet gas temperature sensor THG – E2 | 20 °C {68 °F}: 13.7 – 29.8 kΩ<br>50 °C {122 °F}: 7.13 – 13.7 kΩ<br>80 °C {176 °F}: 4.1 – 7.13 kΩ |

**Do the measurements meet the standard value?**

| YES | NO |
|---|---|
| **Go to step 4.** | **Replace the EGR cooler outlet gas temperature sensor.**<br>**Perform "After-inspection work" of INFORMATION section.** |

| 4 | **Inspect the coolant** |
|---|---|

1. Check the level and condition of the coolant in the coolant reservoir.
2. Check the condition of the coolant pipe (clogging or leaks).

**Was any failure found?**

| YES | NO |
|---|---|
| **Replenish the coolant, or repair or replace the faulty part.**<br>**Perform "After-inspection work" of INFORMATION section.** | **Go to step 5.** |

| 5 | **Inspect the EGR cooler 1** |
|---|---|

1. Check if soot is obstructing the inlet/outlet of the EGR cooler gas passageway.

**Was any failure found?**

| YES | NO |
|---|---|
| **Remove the soot in the gas passageway inlet/outlet and then go to step 6.** | **Go to step 6.** |

| 6 | Inspect the EGR cooler 2 |
|---|---|

1. Check if there are foreign substances stuck to the EGR cooler coolant passageway.
2. Check the EGR cooler coolant passageway for obstruction due to deformation or other damage.
3. Check if coolant is leaking from the EGR cooler.

**Was any failure found?**

**YES**

**Remove the soot in the gas passageway inlet/outlet, or repair or replace the faulty part.**
**If the only cause of the malfunction was soot, go to step 6.**

**NO**

**Go to step 7.**

| 7 | Inspect the EGR valve |
|---|---|

1. Check the EGR valve for damage due to incursion of foreign substances.
2. Check if the inlet/outlet of the exhaust gas passageway is obstructed by soot.

**Was any failure found?**

**YES**

**Remove foreign substances and clean the passageway.**
**Replace the EGR valve if it is damaged.**
**Perform "After-inspection work" of INFORMATION section.**

**NO**

**Go to step 8.**

| 8 | Check the response delay of the EGR valve [HINO DX II ] |
|---|---|

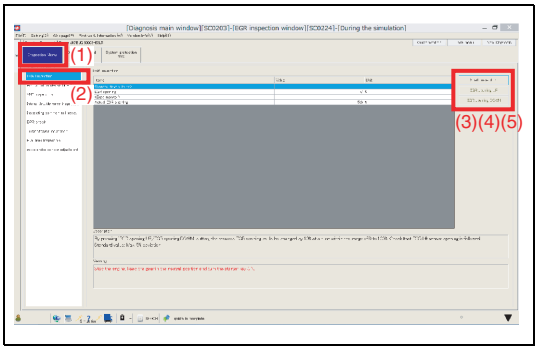


SAPH16F010301268

1. Connect the vehicle to HINO DX II .
2. Set the starter switch to the "ON" position.
3. Select [Engine] on the screen of HINO DX II .
4. Select [Inspection Menu] and then [EGR inspection] from the menu, then inspect the response delay at the Target EGR position and Actual EGR position.

**⚠ CAUTION**
**Perform the inspection while the engine is stopped to avoid damages.**

<Inspection procedure>
(1) Select [Inspection Menu].
(2) Select [EGR inspection].
(3) Click [Start inspection].
(4) Select [EGR opening UP]:
• Inspect the response delay at each step of the Target EGR position and Actual EGR position from 0 to 100 %.
(5) Select [EGR opening DOWN]:
• Inspect the response delay at each step of the Target EGR position and Actual EGR position from 100 to 0 %.

**HINT**
**The EGR opening position changes of around 10 % per step between 0 – 100 %.**

| Standard values |
|---|
| The response delay should be less than 5 seconds. |

**Do the measurements meet the standard value?**

| YES | NO |
|---|---|
| Go to step 9. | Replace the EGR valve.<br>Perform "After-inspection work" of INFORMATION section. |

| 9 | Inspect the diesel throttle valve |
|---|---|

1. Stop the engine.
2. Check the working condition of the diesel throttle valve (abnormal opening or valve sticking).

**Was any failure found?**

**YES**

**Replace the diesel throttle valve.**
**Perform "After-inspection work" of INFORMATION section.**

**NO**

**Go to step 10.**

| 10 | Inspect the SCV [HINO DX II ] |
|---|---|

1. Perform an SCV test and a malfunction reproduction test.

- For a detailed procedure, refer to the separate "SCV free acceleration test" in the following pages.

**Was any failure found?**

**YES**

**Repair or replace the faulty part.**
**Perform "After-inspection work" of INFORMATION section.**

**NO**

**Go to step 11.**

| 11 | Inspect the Injector [HINO DX Ⅱ ] |
|---|---|

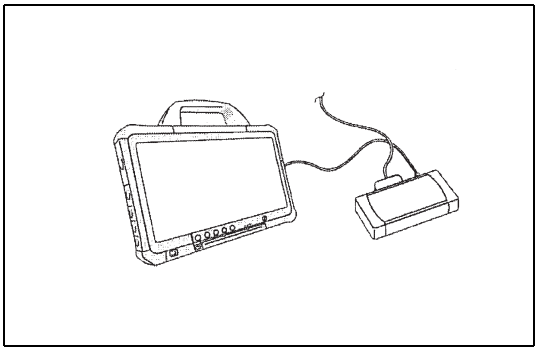

SAPH16F010301269

Check the injection quantity and the rotational fluctuation.

1. Start the Engine.
2. Select [Injection quantity] from the [Data monitor Setting] menu, and measure the fuel injection quantity.
3. Select [Engine revolution] from [Data monitor Setting] on the menu, and measure the rotational fluctuation.

| Measurement conditions |
|---|
| **Engine speed: 1,500 r/min**<br>**No-load**<br>**T/M shift lever: Neutral**<br>**A/C off and Air compressor un-operating**<br>**Engine coolant temperature: More than 80 °C {176 °F}** |

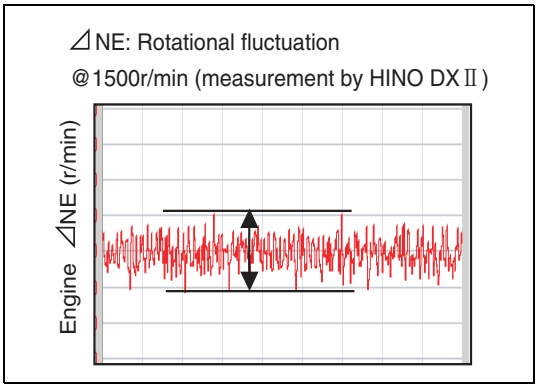


SAPH16F010301270

**Standard values**

| Type of | Q ($mm^3$/st) | ⊿Ne (r/min) |
|---|---|---|
| MT | 5.0q ≤ | ≤ 26 |
| Allison® 2200 | 6.0q ≤ | |
| Allison® 2500 | | |
| Allison® 3500 | | |

**Do the measurements meet the standard value? (both Injection quantity and rotational fluctuation)**

**YES**

**Go to step 12.**

**NO**

**Replace the injector.**
**Perform "After-inspection work" of INFORMATION section.**

| 12 | Check the DTC detected (Engine ECU) [HINO DX ll ] |
|---|---|

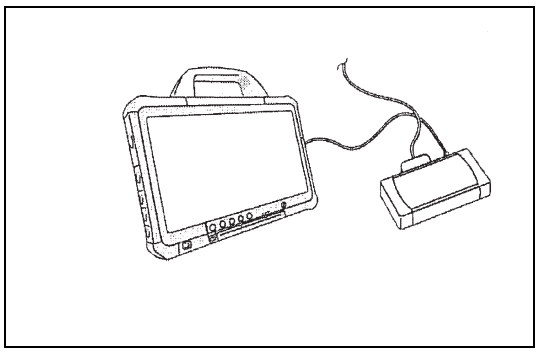

SAPH16F010301272

1. Warm-up the engine. (engine coolant temperature: 60 °C {140 °F} or more)
2. Stop the engine.
3. Set the starter switch to the "ON" position.
4. Select [Engine] and check if P2457 has been detected.

**Has DTC P2457 been detected?**

**YES**

**Replace the engine ECU.**
**Perform "After-inspection work" of INFORMATION section.**

**NO**

**Procedure completed.**
**Perform "After-inspection work" of INFORMATION section.**

## SCV FREE ACCELERATION TEST

| 1 | Test method |
|---|---|

**<Engine speed pattern>**

1. After engine has reached operating temperature (more than 82 °C {179.6 °F}).
2. After air compressor completed building pressure.
3. A/C, Head lights off.
4. All devices off. (PTO, Refrigeration compressor. etc)
5. Control the engine revolution by means of operating Cruise Control system.

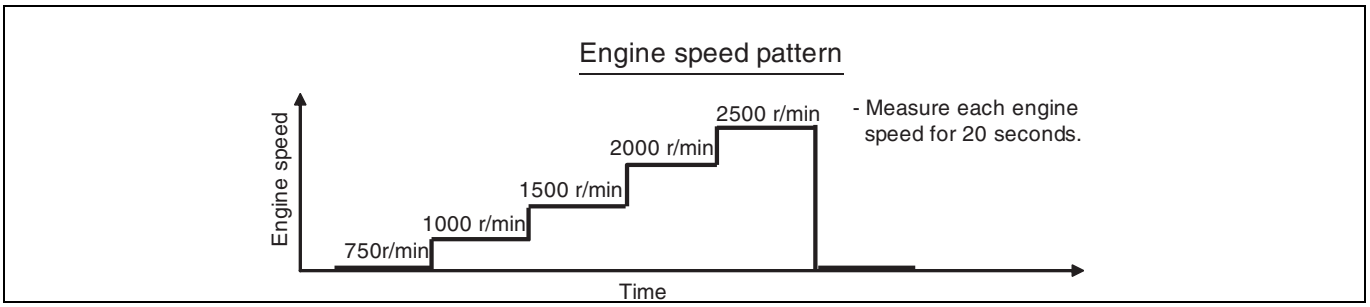


SAPH16F010301273

**<Acceleration pattern>**

1. After engine has reached operating temperature (more than 82 °C {179.6 °F}).
2. After air compressor completed building pressure.
3. A/C, Head lights off.
4. All devices off. (PTO, Refrigeration compressor. etc)
5. Check that actual common rail pressure following target.

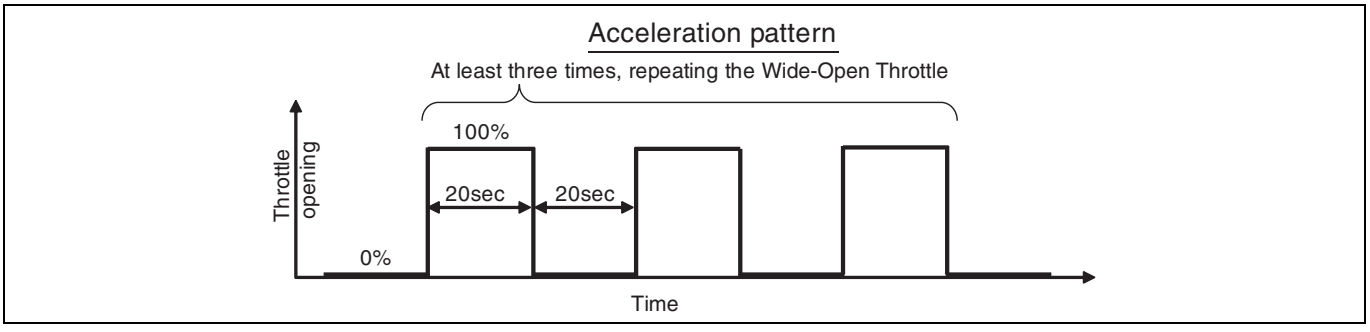


SAPH16F010301274

## 2 Types of HINO DX II data to be measured

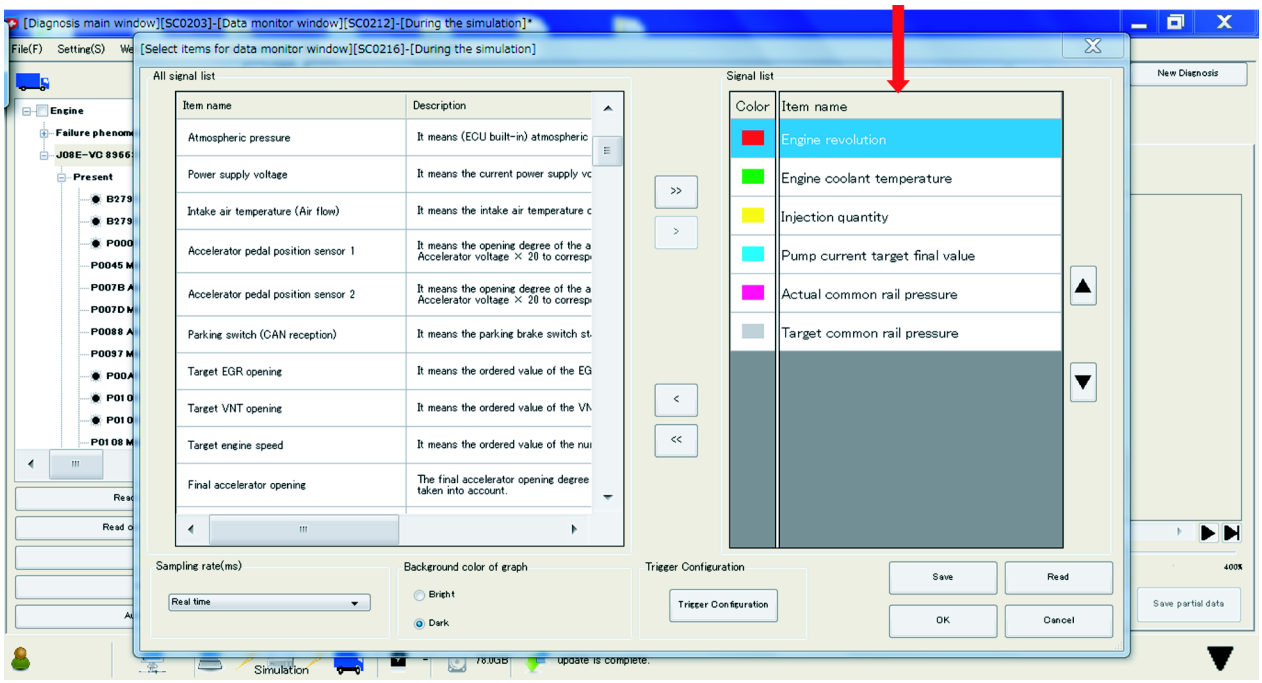


SAPH16F010301275

## 3 If the following symptoms occur, FAIL. If not, OK.

a. Pressure is reduced by 5 MPa or more continually for 5 seconds or more. → Replace the supply pump.

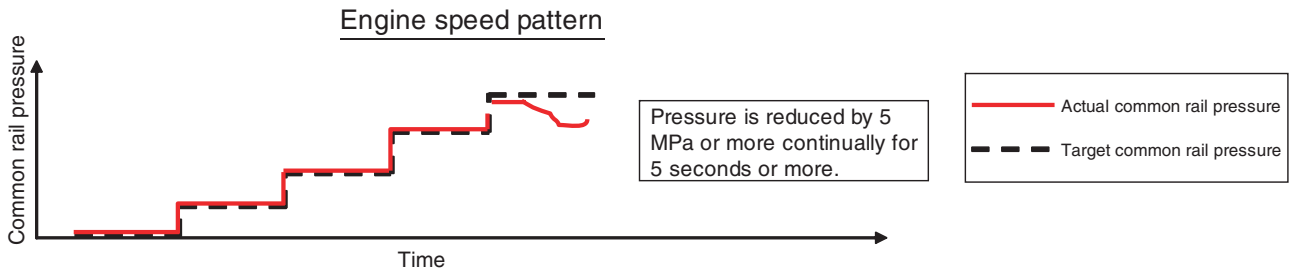


SAPH16F010301276

b. Pressure is increased by 5 MPa or more continually for 5 seconds or more. → Replace the SCV.

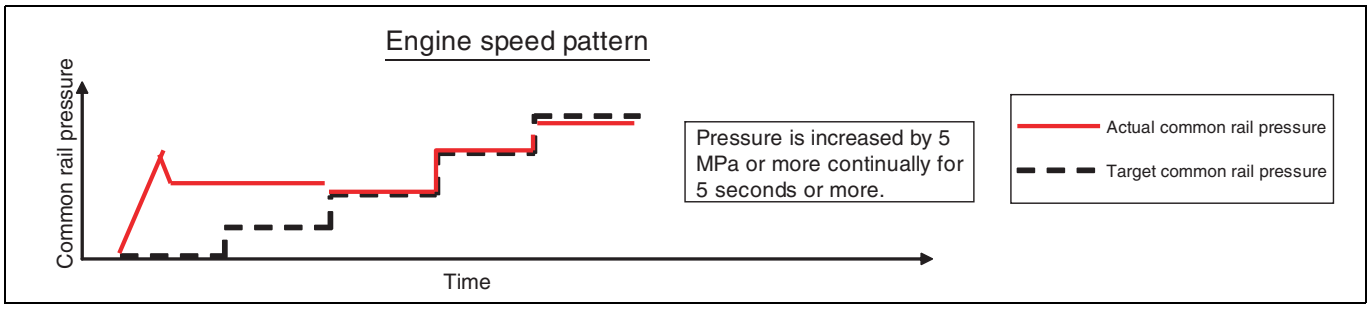


SAPH16F010301277

c. The maximum common rail pressure exceeds 222 MPa for even a moment during pressure increase. → Replace the SCV.

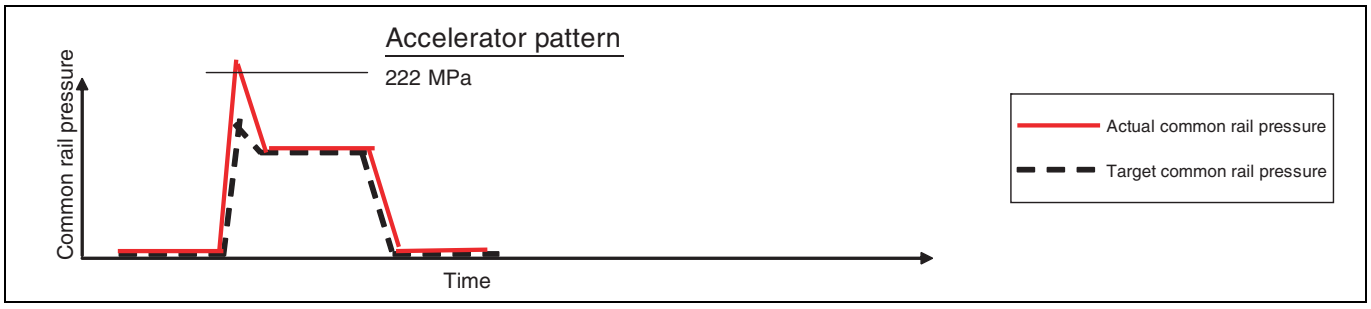


SAPH16F010301278

d. After the maximum common rail pressure exceeds 222 MPa during pressure increase, the actual rail pressure falls below the target rail pressure. → Replace the SCV.

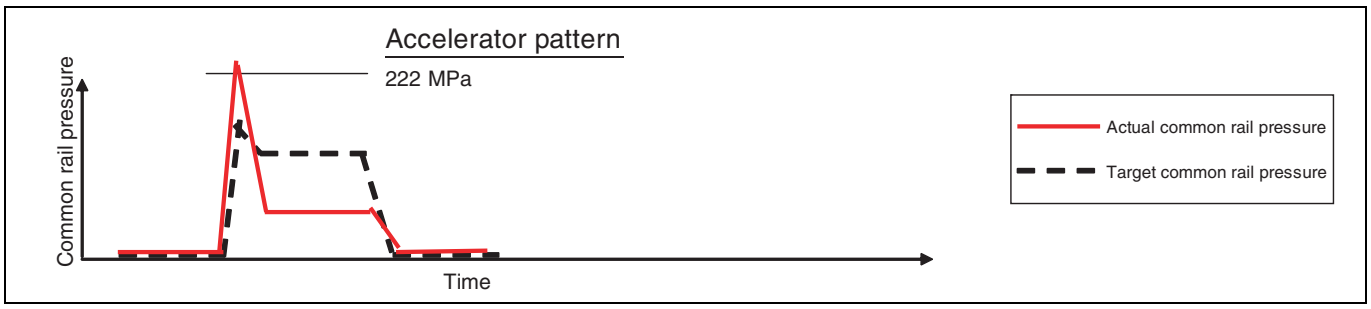


SAPH16F010301279

e. Before the maximum common rail pressure exceeds 222 MPa during pressure increase, the actual rail pressure falls below the target rail pressure rapidly. → Replace the common rail.

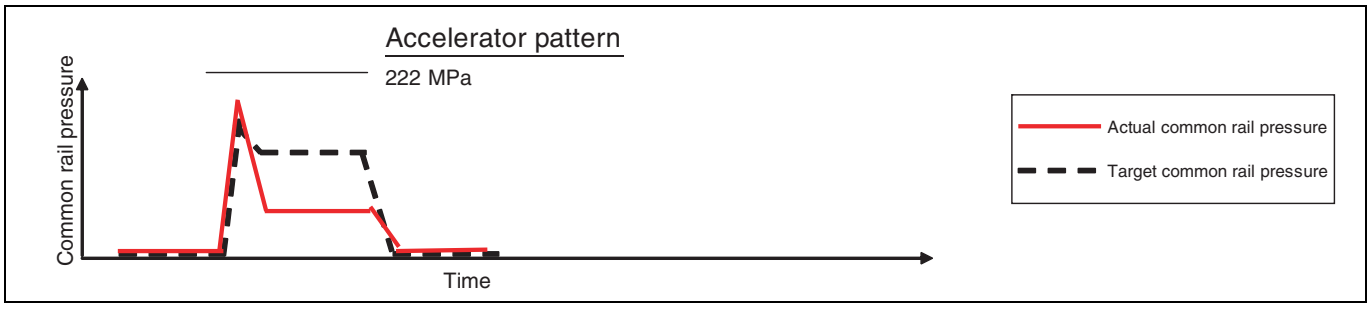


SAPH16F010301280

f. The maximum common rail pressure exceeds 222 MPa during pressure drop. → Check the return pipe.

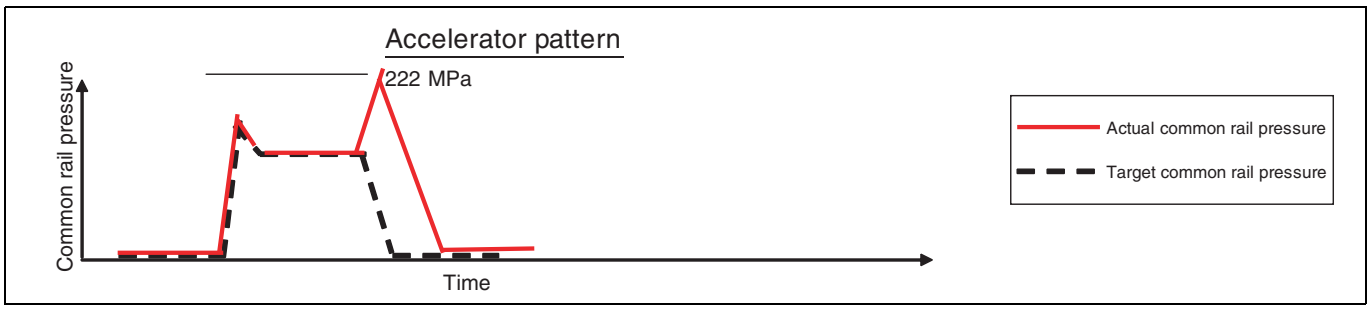


SAPH16F010301281

g. The pressure is disturbed at a given speed and the pressure decreases at higher speed. → Replace the supply pump.

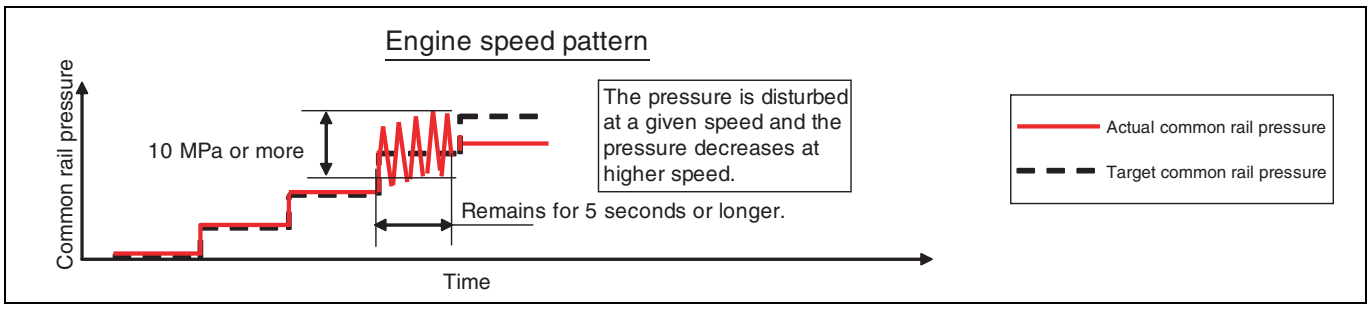


SAPH16F010301282

h. Hunting remains within 10 MPa or more for more than 5 seconds. → Replace the SCV.

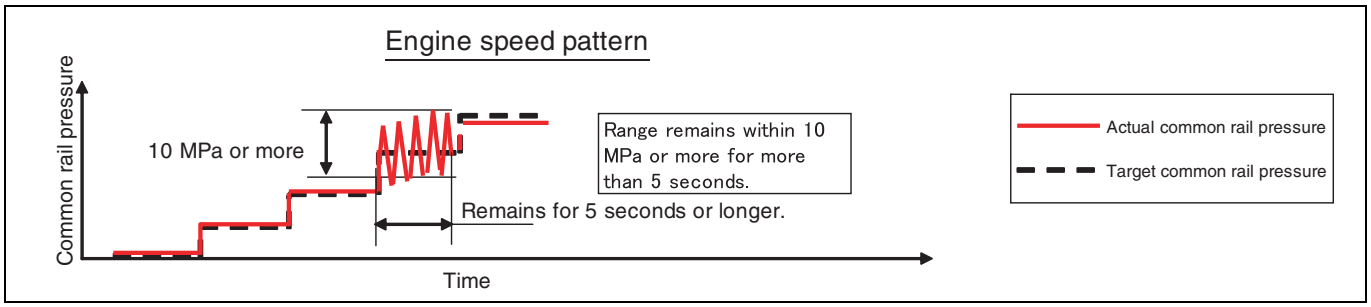


SAPH16F010301283

i. The engine stops during pressure relief. → Replace the SCV.

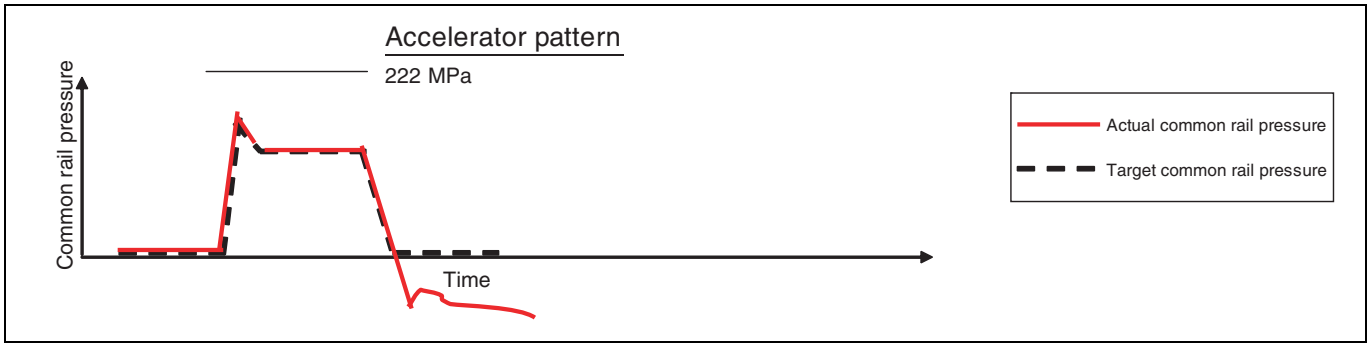


SAPH16F010301284

j. Target common rail pressure during idling deviates from the standard value. → Replace the SCV.

**<FINAL VALUE OF PUMP CURRENT TARGET test>**

1. After engine has reached operating temperature. (more than 82 °C {179.6 °F})
2. After air compressor has completed building pressure.
3. A/C, Head lights are off.
4. All other devices turned off. (PTO, Refrigeration compressor. etc)
5. Engine speed: 750 r/min

| Criteria | | |
|---|---|---|
| FINAL VALUE OF PUMP CURRENT TARGET | Average current value | 1,740 ± 80 mA |
| | Fluctuation in current value | < 80 mA |

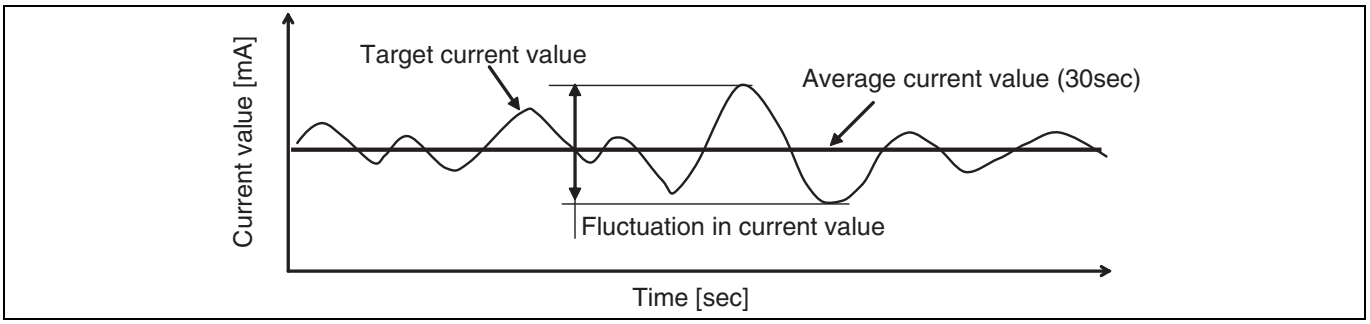


SAPH16F010301285

# DTC: P2458

EN01H16F01030F03001177

## P2458: Fault in manual regeneration

INFORMATION

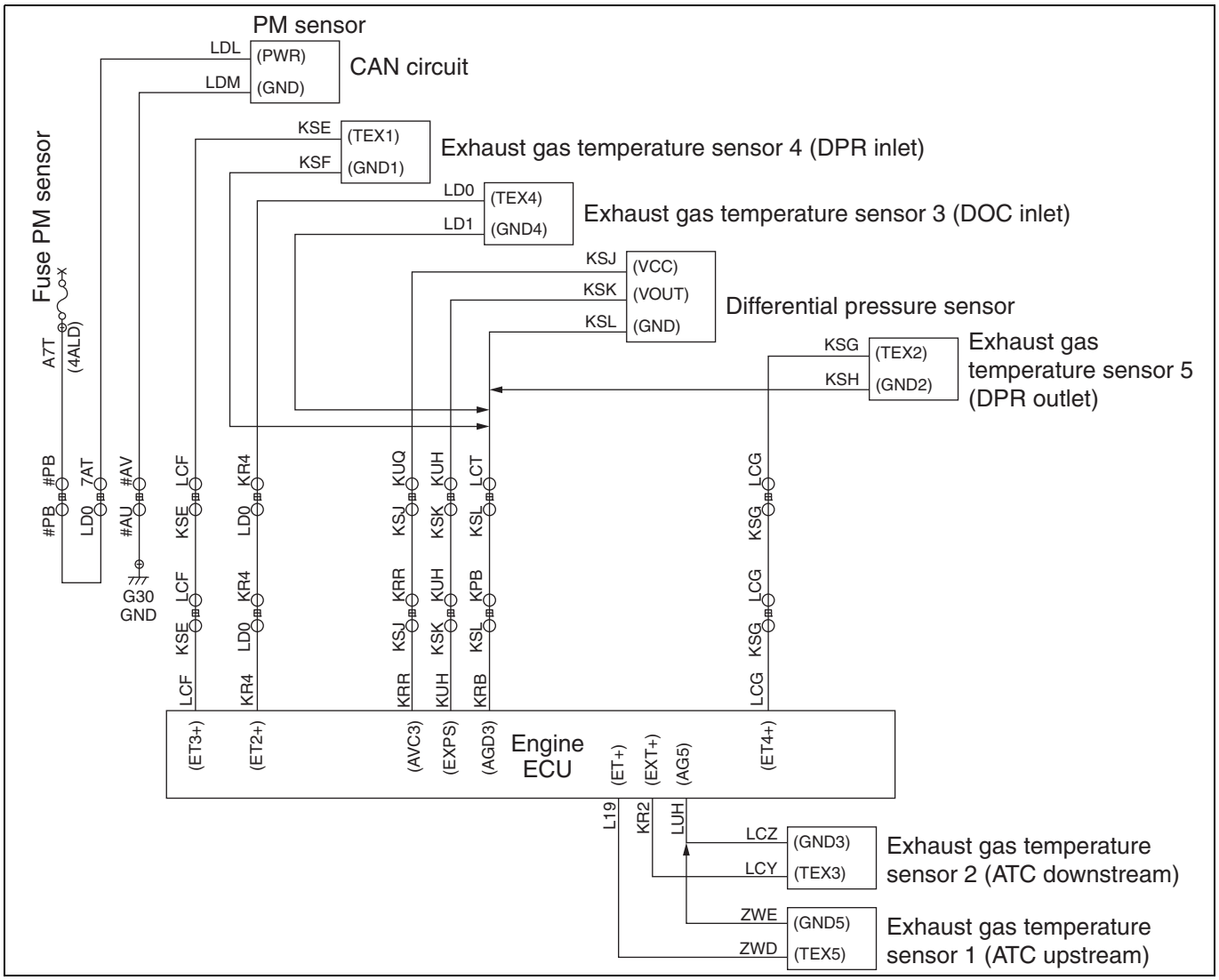


SAPH16F010301286

### 1. Technical description

- The DPR performs PM regeneration by increasing DOC temperature using the engine warm up control.
- During a manual regeneration, warm up control is carried out by idle up, exhaust brake closing, VNT control, after injection, post injection and dosing valve injection.

**<Description of malfunction>**

- In a manual regeneration, the DOC and ATC temperatures do not increase to the post injection-enabled region even after the specified time.

### 2. DTC set condition

(1) DTC detection condition

- Battery voltage is in the range of 10 V to 16 V.
- The engine speed remains at 500 r/min or more.
- DPR manual regenerating.
- Do not detect the exhaust gas temperature sensor 4 (DPR inlet) of failure.

(2) Judgment criteria
- After a manual DPR regeneration is started, the DOC temperature is still below 200 °C {392 °F} and the ATC temperature is still below 230 °C {446 °F} even after 30 minutes.

**3. Reset condition**
- DPR memory is reset by the diagnostic tool (HINO DX II ).

**4. Indication, warning or system control regulation when the DTC is set.**
- MIL: OFF
- SVS light: ON

**5. Symptoms on the vehicle when the DTC is set**

**<Symptoms on the vehicle due to backup control (fail safe function)>**
- –

**<Symptoms on the vehicle due to malfunction>**
- Do not DPR regeneration.

**6. Pre-inspection work**
- Check that the battery voltage is in the normal range.

**7. After-inspection work**
- Clear all past DTCs.
- Check that no DTC is detected after test drive.

**8. Estimated failure factors**

**Drop in injection quantity of fuel injection system**
**Failure of VNT system**
**Exhaust gas temperature sensor 4 (DPR inlet):**
- Loose/disconnected sensor of failure in sensing area (contamination, clogging or damaged)
- Abnormal resistance of sensor
- Failure in engine ECU sensor power supply

**Exhaust gas temperature sensor 1 (ATC upstream)**
- Loose/disconnected sensor of failure in sensing area (contamination, clogging or damaged)
- Abnormal resistance of sensor
- Failure in engine ECU sensor power supply

**Exhaust brake**
- Malfunction of exhaust brake
- Improper adjustment of exhaust brake (The difference between the injection quantities in active and inactive conditions is out of the standard)

Gas leaks in the middle of the exhaust system
Failure of coolant temperature sensor (low temperature stuck)

## INSPECTION PROCEDURE: P2458

| 1 | Check the DTC detected1 [HINO DX II ] |
|---|---|

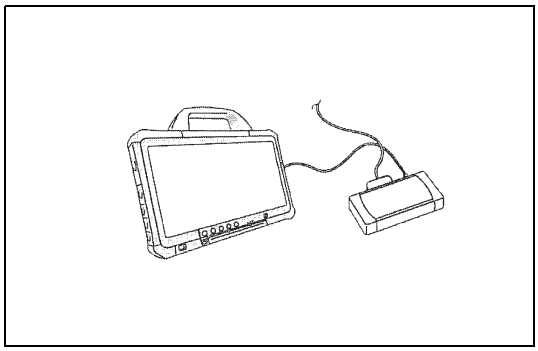

SAPH16F010301287

1. Set the starter switch to the "LOCK" position.
2. Connect the vehicle to HINO DX II .
3. Set the starter switch to the "ON" position.
4. Select [Engine] and check if any DTC other than P2458 has been detected.

**Have DTCs other than P2458 been detected?**

**YES**

**Go to diagnosis procedure of a related DTC.**

**NO**

**Go to step 2.**

| 2 | Inspect the exhaust pipe |
|---|---|

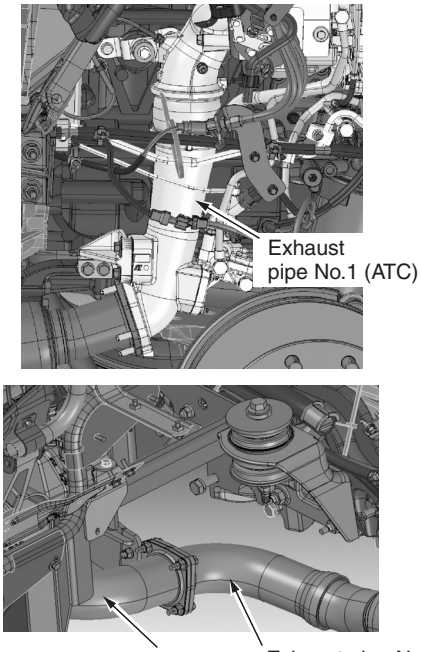


SAPH16F010301288

1. Check for exhaust pipe crack (between the turbocharger and DPR), exhaust gas leak (soot contamination) and improper coupling flange tightening.

**Was any failure found?**

**YES**

**Repair of exhaust pipe (replace gasket, retighten), replace if needed.**

**NO**

**Go to step 3.**

| 3 | Inspect the exhaust brake valve |
|---|---|

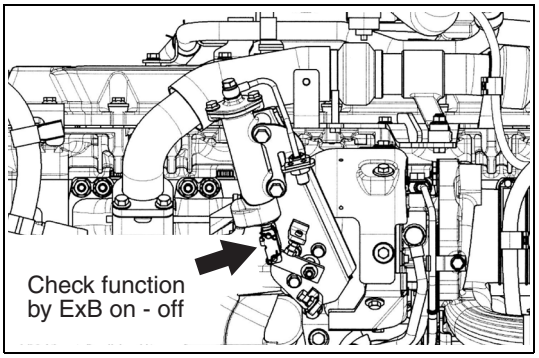


SAPH16F010301289

1. Check the exhaust brake valve for unease and sticking.

**Was any failure found?**

**YES**

**Clean the exhaust brake valve.**
**Replace if necessary.**
**After cleaning or replacement, go to step 4.**

**NO**

**Go to step 4.**

| 4 | Inspect the fuel injection quantity [HINO DX II ] |
|---|---|

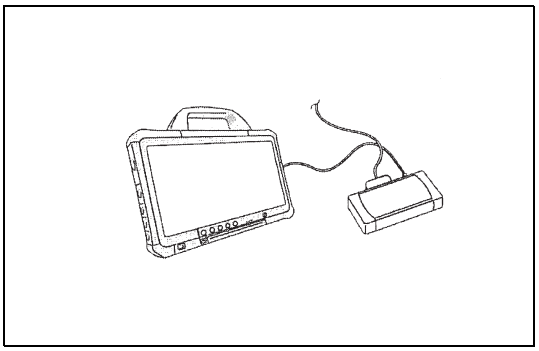

SAPH16F010301290

1. Warm up the engine. (Coolant temperature: 80 °C {176 °F} or more)

2. Turn OFF the devices that place load on the engine, such as the air conditioner.
<Inspection procedure>
(1) Select [Engine] on the screen of HINO DX II .
(2) Select [Data monitor Setting] and [Active test Setting].
(3) Select [Target rpm] from [Active test Setting] and set the engine revolution to 980 r/min.
(4) Select [Injection quantity] from [Data monitor Setting].
(5) Turn ON/OFF the exhaust brake switch, and check the difference between the injection quantity of the injector while the exhaust brake is working and the injection quantity when the exhaust brake is not actuated.

| Measurement conditions | Standard values |
|---|---|
| • **Engine revolution: 980 r/min**<br>• **Engine coolant temperature: 80 °C {176 °F} or more**<br>• **Turn OFF the air conditioner, and other devices that place load on the engine.** | **10 – 14 $mm^3$/st** |

**Is the measured value within the standard values? (There shall be a change in the injection quantity between while the exhaust brake is working and when it is not actuated.)**

**YES**

**Go to step 5.**

**NO**

**Adjust the butterfly opening of the exhaust brake.**

## 5 Inspect the exhaust gas temperature sensor 4 (DPR inlet)

1. Inspect the exhaust gas temperate sensor 4 (DPR inlet) for improper installation.
2. Check the sensing area of the exhaust gas temperature sensor 4 (DPR inlet) for dirt, clogging, and damage.

**Was any failure found?**

**YES**

**Clean the sensing area and install the sensor properly.**
**If damage is found, replace the sensor.**

**NO**

**Go to step 6.**

## 6 Inspect the exhaust gas temperature sensor 4 (DPR inlet) unit

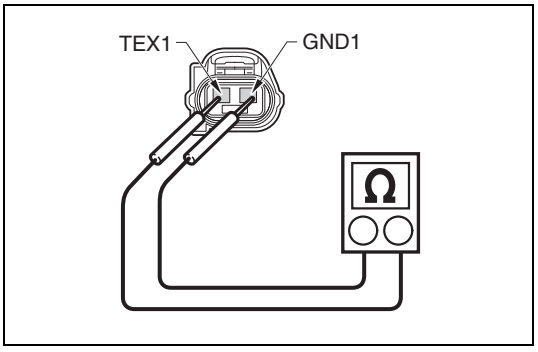

SAPH16F010301291

1. Disconnect the exhaust gas temperature sensor 4 (DPR inlet) connector.
2. Use the electrical tester to measure the resistance between the terminals of the exhaust gas temperature sensor 4 (DPR inlet).

| Measurement conditions | Tester connections | Standard values |
|---|---|---|
| Starter switch: LOCK | Exhaust gas temperature sensor 4 (DPR inlet) TEX1 – GND1 | 20 °C {68 °F}: 13.7 – 29.8 kΩ<br>50 °C {122 °F}: 7.13 – 13.7 kΩ<br>80 °C {176 °F}: 4.1 – 7.13 kΩ |

**Do the measurements meet the standard value?**

**YES**

**Go to step 7.**

**NO**

**Replace the exhaust gas temperature sensor 4 (DPR inlet).**
**Perform "After-inspection work" of INFORMATION section.**

| 7 | Inspect the exhaust gas temperature sensor 1 (ATC upstream) |
|---|---|

1. Inspect the exhaust gas temperate sensor 1 (ATC upstream) for improper installation.
2. Check the sensing area of the exhaust gas temperature sensor 1 (ATC upstream) for dirt, clogging, and damage.

**Was any failure found?**

**YES**

**Clean the sensing area and install the sensor properly.**
**If damage is found, replace the sensor.**

**NO**

**Go to step 8.**

| 8 | Inspect the exhaust gas temperature sensor 1 (ATC upstream) unit |
|---|---|

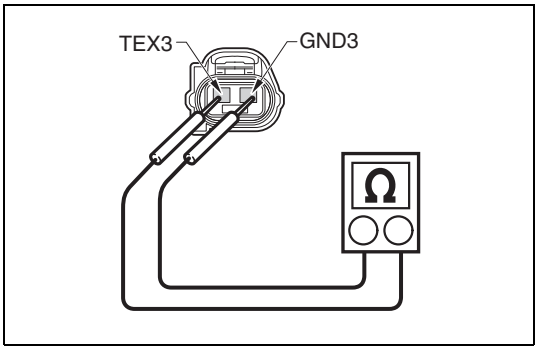

SAPH16F010301292

1. Set the starter switch to the "LOCK" position.
2. Disconnect the exhaust gas temperature sensor 1 (ATC upstream) connector.
3. Use the electrical tester to measure the resistance between the terminals of the exhaust gas temperature sensor 1 (ATC upstream).

| Measurement conditions | Tester connections | Standard values |
|---|---|---|
| **Starter switch: LOCK** | **Exhaust gas temperature sensor 1 (ATC upstream) TEX3 – GND3** | **20 °C {68 °F}: 13.7 – 29.8 kΩ 50 °C {122 °F}: 7.13 – 13.7 kΩ 80 °C {176 °F}: 4.1 – 7.13 kΩ** |

**Do the measurements meet the standard value?**

**YES**

**Go to step 9.**

**NO**

**Replace the exhaust gas temperature sensor 1 (ATC upstream).**
**Perform "After-inspection work" of INFORMATION section.**

| 9 | Inspect the DPR filter |
|---|---|



Damage

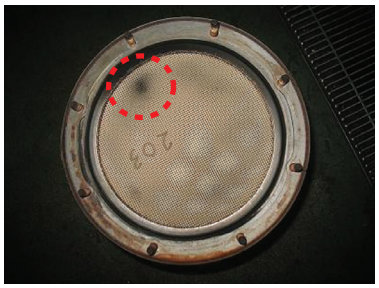

Soot leakage

SAPH16F010301293

1. Remove DPR filter and check that there is no soot leaking at the rear edge of the DPR filter, no damage, and no other abnormality.

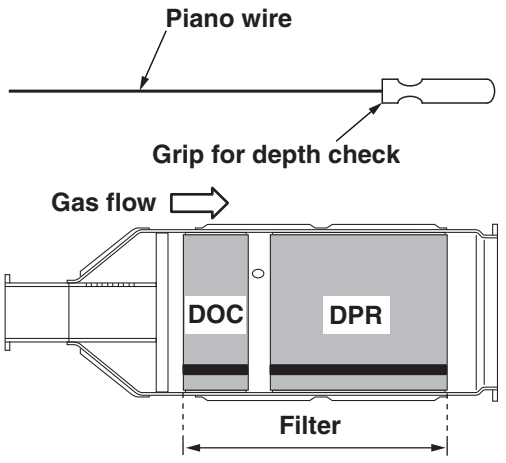


SAPH16F010301294

2. Insert the check probe from the rear surface to inspect the inside.

3. Check probe inserting depth.

| Standard values |
|---|
| 175 - 185 mm {6.890 - 7.283 in.} |

| Was any failure found? |
|---|

YES

**Replace the DPR filter and the PM sensor. After replace, perform DPR manual regeneration.**

NO

**Go to step 10.**

## 10 Inspect the coolant temperature sensor

1. Inspect the coolant temperature sensor for improper installation.
2. Check the sensing area of the coolant temperature sensor for dirt, clogging, and damage.

**Was any failure found?**

YES

**Clean the sensing area and install the sensor properly.**
**If damage is found, replace the sensor.**

NO

**Go to step 11.**

## 11 Inspect the coolant temperature sensor unit

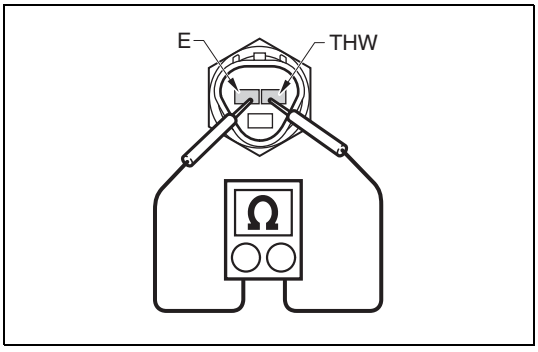


SAPH16F010301295

1. Set the starter switch to the "LOCK" position.
2. Disconnect the engine coolant temperature sensor connector.
3. Use the electrical tester to measure the resistance between the terminals of the engine coolant temperature sensor.

| Measurement conditions | Tester connections | Standard values |
|---|---|---|
| Starter switch: LOCK | Engine coolant temperature sensor THW – E | 20 °C {68 °F}: 2.59 – 2.32 kΩ<br>80 °C {176 °F}: 0.326 – 0.310 kΩ |

**Do the measurements meet the standard value?**

YES

**Go to step 12.**

NO

**Replace the coolant temperature sensor.**

| 12 | Perform a basic engine check |
|---|---|

1. Perform a basic engine check using the ENGINE BASIC INSPECTION SHEET. (Check the fuel injection amount, check the VNT activate.)

**Was any failure found?**

**YES**

**Repair or replace the faulty part.**
**Perform "After-inspection work" of INFORMATION section.**

**NO**

**Go to step 13.**

| 13 | DPR manual regeneration |
|---|---|

1. Perform DPR manual regeneration, and check succeeded.

**Was DPR regeneration succeeded?**

**YES**

**Procedure completed.**

**NO**

**Replace the DPR filter and the PM sensor.**
**After replace, perform DPR manual regeneration.**

# DTC: P2459

EN01H16F01030F03001178

## P2459: Frequent regeneration

INFORMATION

**1. Technical description**

- ECU constantly calculate and accumulate the amount of soot deposit from the engine.
- Moreover, based on the accumulated amount, the regeneration interval is determined.

**<Description of malfunction>**

- Failure is detected for DPR prescribed regeneration interval.

**2. DTC set condition**

(1) DTC detection condition

- The engine must not be stopped.
- Calculated amount of DPR filter soot buildup ≥ regeneration threshold value.

(2) Judgment criteria

- There was a difference between the actual amount of soot deposit calculation and the ideal amount of soot deposit calculation.

**3. Reset condition**

- Immediately after normal operation is restored and DPR-related memory is reset.

**4. Indication, warning or system control regulation when the DTC is set.**

- MIL: ON
- SVS light: OFF

**5. Symptoms on the vehicle when the DTC is set**

**<Symptoms on the vehicle due to backup control (fail safe function)>**

- –

**<Symptoms on the vehicle due to malfunction>**

- –

**6. Pre-inspection work**

- Check that the battery voltage is in the normal range.

**7. After-inspection work**

- Clear all past DTCs.
- Check that no DTC is stored after test drive.

**8. Estimated failure factors**

- Abnormality in the soot calculation area, such as the atmospheric pressure sensor, within ECU is suspected.

## INSPECTION PROCEDURE: P2459

| 1 | Check the DTC detected (Engine ECU) [HINO DX II ] |
|---|---|

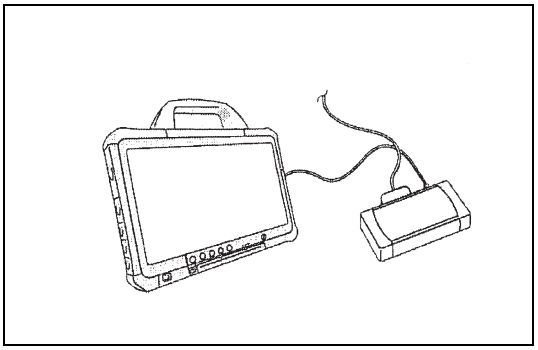

SAPH16F010301296

1. Set the starter switch to the "LOCK" position.
2. Connect the vehicle to HINO DX II .
3. Set the starter switch to the "ON" position.
4. Select [Engine] and check if any DTC other than P2459 has been detected.

**Has a DTC other than P2459 been detected?**

**YES**

**Go to diagnosis procedure of a related DTC.**

**NO**

**Go to step 2.**

| 2 | Check the DTC detected (Engine ECU) [HINO DX II ] |
|---|---|

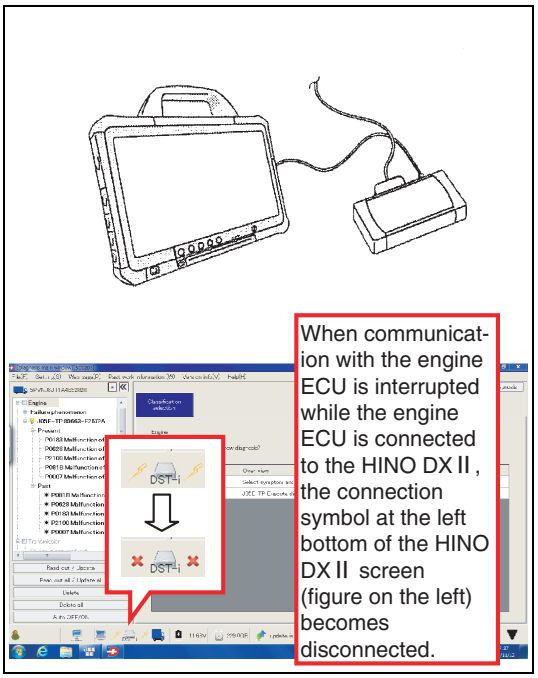


SAPH16F010301297

1. Erase the trouble history.
2. Set the starter switch to the "LOCK" position.
3. Make sure the engine ECU main relay is OFF in HINO DX II menu. (This cuts off the communication between HINO DX II and the engine ECU.)
4. Set the starter switch to the "ON" position.
5. Select [Engine] and check if DTC has been detected.

**Has DTC P2459 been detected?**

**YES**

**Replace the engine ECU.**
**Perform "After-inspection work" of INFORMATION section.**

**NO**

**Procedure completed.**
**Perform "After-inspection work" of INFORMATION section.**

# DTC: P2463

EN01H16F01030F03001179

## P2463: DPF clogged

INFORMATION

**1. Technical description**

- ECU constantly calculate and accumulate the amount of soot deposit from the engine. Moreover, based on the accumulated amount, the regeneration mode is determined.

**<Description of malfunction>**

- Operation is not completed according to DPR manual regeneration request.

**2. DTC set condition**

(1) DTC detection condition

- Starter switch ON.

(2) Judgment criteria

- Judge when soot deposit accumulated by ECU reaches the warning level judgment value (5.0 g/L). (Automatic regeneration was not completed for some reason. Then, the DPR light blinked, but manual regeneration was not performed. Or manual regeneration was attempted, but the regeneration did not start and the vehicle continued to be driven.)

**3. Reset condition**

- Immediately after normal operation is restored and DPR-related memory is reset.

**4. Indication, warning or system control regulation when the DTC is set.**

- MIL: ON
- SVS light: OFF

**5. Symptoms on the vehicle when the DTC is set**

**<Symptoms on the vehicle due to backup control (fail safe function)>**

- –

**<Symptoms on the vehicle due to malfunction>**

- –

**6. Pre-inspection work**

- Check that the battery voltage is in the normal range.

**7. After-inspection work**

- Clear all past DTCs.
- Check that no DTC is stored after test drive.

**8. Estimated failure factors**

- The DPR light continued to blink, but manual regeneration was not performed.
- The DPR light did not blink.
- Check for a burned-out meter bulb. (OK if the indicator illuminates when the starter switch is turned ON while the engine is not running with the key ON.)

**(DTC codes are present.)**

1. Air pressure too low (P2431)

**(No DTC codes are present.)**

1. Key off during regeneration, Engine speed too low during regeneration
2. Exhaust outlet over temperature (OT1)
   (Judge at 580 °C {1,076 °F} or higher at the DPR filter inlet. At 580 °C {1,076 °F} or lower, the abort OFF will be immediately enabled to be ready for regeneration.)

**[Confirmation points for judgment]**

- The DPR light continued to blink, but manual regeneration was not performed.

**Since the regeneration condition (idle condition) may not be met, check the following:**

- Inspect the neutral switch, accelerator switch system and vehicle speed sensor system.
- Check for disconnection in the DPR switch.
- PTO signal ON or unresponsive return of external accelerator.

## INSPECTION PROCEDURE: P2463

| 1 | Check the DTC detected (Engine ECU) [HINO DX II ] |
|---|---|

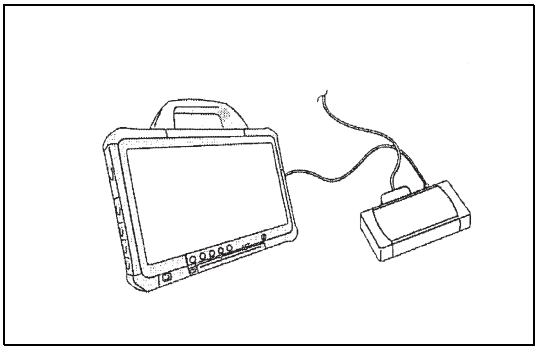

SAPH16F010301298

1. Set the starter switch to the "LOCK" position.
2. Connect the vehicle to HINO DX II .
3. Set the starter switch to the "ON" position.
4. Select [Engine] and check if any DTC other than P2463 has been detected.

**Has a DTC other than P2463 been detected?**

**YES**

**Go to diagnosis procedure of a related DTC.**

**NO**

**Go to step 2.**

| 2 | Inspect DPR switch |
|---|---|

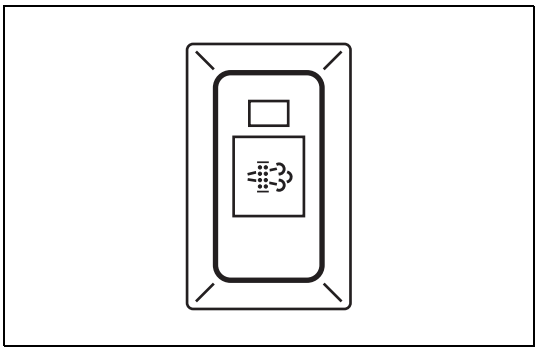

SAPH16F010301299

1. Check the connection of the DPR switch connector (Looseness or poor contact).
2. Check the switch unit.
3. Check that there is no disconnection or short-circuit of the DPR switch harness.

**Was any failure found?**

**YES**

- **Repair or replace the faulty part.**
- **Replace the DPR filter and the PM sensor.**
- **Perform a DPR manual regeneration to complete the check procedure.**

**Perform "After-inspection work" of INFORMATION section.**

**NO**

**Go to step 3.**

| 3 | Inspect the DPR indicator light |
|---|---|

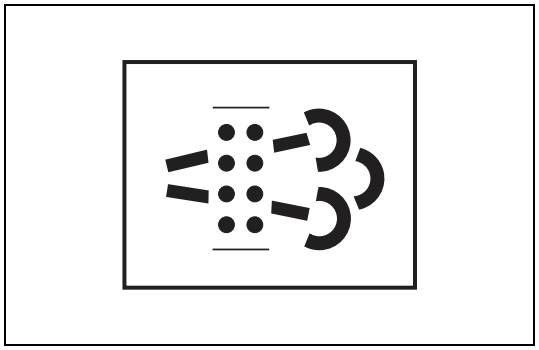

SAPH16F010301300

1. Check the connection of the combination meter connector (Looseness or poor contact).
2. Check if bulb is burnt out.
3. Check there is no disconnection or short-circuit of the DPR indicator light harness.

**Was any failure found?**

**YES**

- **Repair or replace the faulty part.**
- **Replace the DPR filter and the PM sensor.**
- **Perform a DPR manual regeneration to complete the check procedure.**

**Perform "After-inspection work" of INFORMATION section.**

**NO**

**Go to step 4.**

| 4 | Inspect the neutral switch |
|---|---|

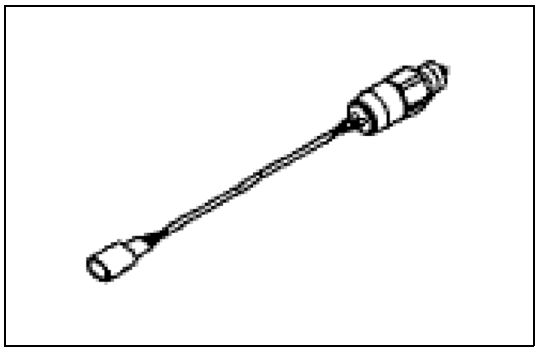

SAPH16F010301301

1. Check the connection of the neutral switch connector (Looseness or poor contact).
2. Check the switch unit.
3. Check there is no disconnection or short-circuit of the neutral switch harness.

**Was any failure found?**

**YES**

- **Repair or replace the faulty part.**
- **Replace the DPR filter and the PM sensor.**
- **Perform a DPR manual regeneration to complete the check procedure.**

**Perform "After-inspection work" of INFORMATION section.**

**NO**

**Go to step 5.**

| 5 | Check the accelerator unit |
|---|---|

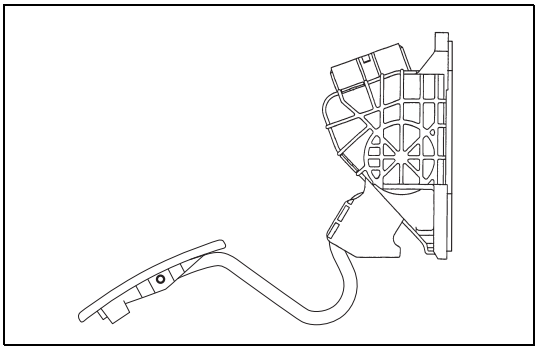

SAPH16F010301302

1. Check the accelerator unit.
2. Check there is no disconnections or short-circuits.

**Was any failure found?**

**YES**

- **Repair or replace the faulty part.**
- **Replace the DPR filter and the PM sensor.**
- **Perform a DPR manual regeneration to complete the check procedure.**

**Perform "After-inspection work" of INFORMATION section.**

**NO**

**Go to step 6.**

| 6 | Check the external accelerator signal [HINO DX II ] |
|---|---|

1. Set the starter switch to the "ON" position.
2. Select [Engine] in HINO DX II menu.
3. Select [PTO accelerator sensor opening] from the [Data monitor Setting] menu, and check if a sensor opening signal of at least 5 % is output with the accelerator sensor at 0 % position (accelerator pedal or lever is not being operated.

**Was any failure found?**

**YES**

- **Check the installation of the external accelerator sensor. Repair if necessary.**
- **Replace the DPR filter and the PM sensor.**
- **Perform a DPR manual regeneration to complete the check procedure.**

**Perform "After-inspection work" of INFORMATION section.**

**NO**

- **Caused by failure to press DPR switch.**
- **Replace the DPR filter and the PM sensor.**
- **Perform a DPR manual regeneration to complete the check procedure.**

**Perform "After-inspection work" of INFORMATION section.**

# DTC: P246F

EN01H16F01030F03001180

## P246F: Exhaust gas temperature sensor 4 (DPR inlet) - rationality

INFORMATION [at Starter switch on]

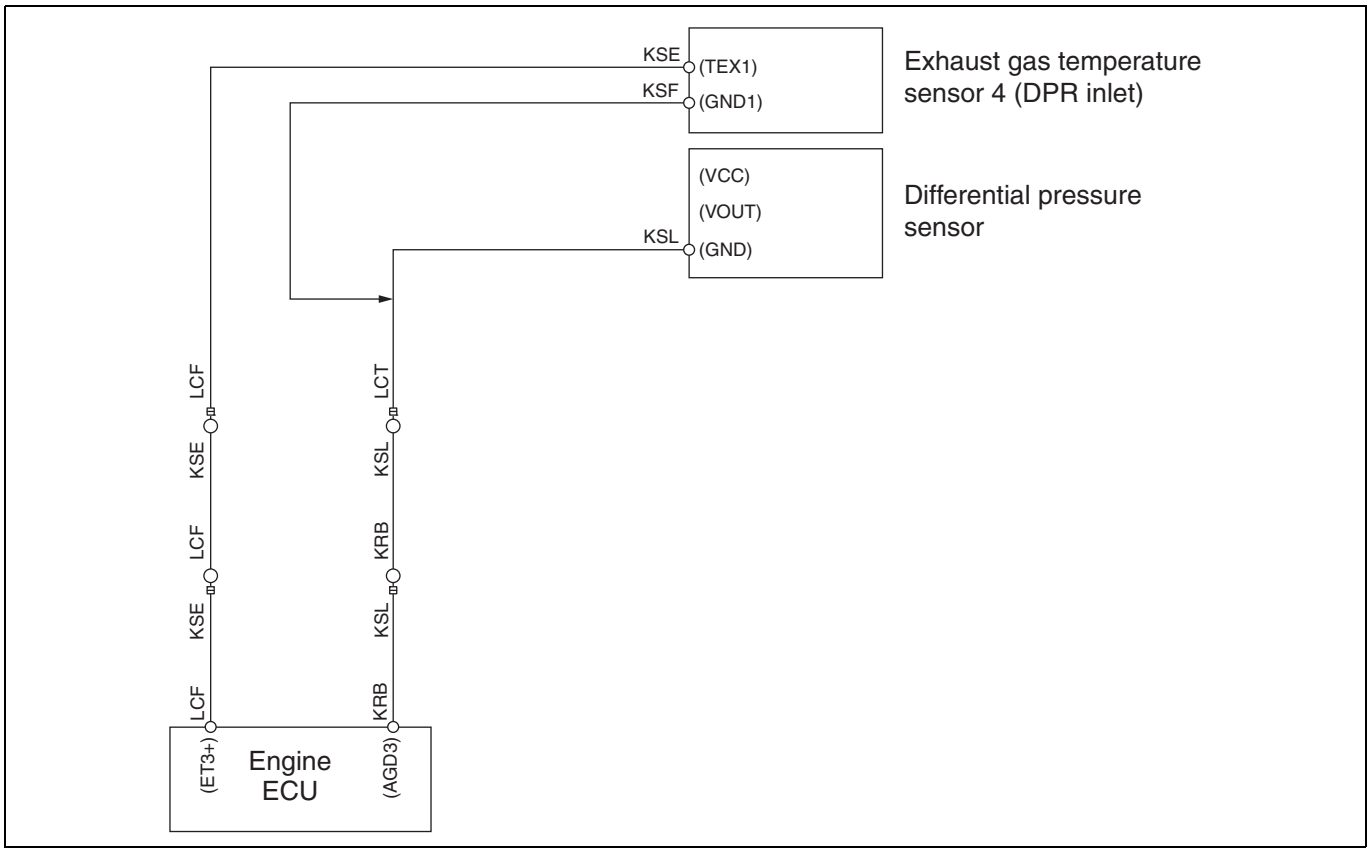


SAPH16F010301303

**1. Technical description**

- The exhaust gas temperature is constantly detected by the exhaust gas temperature sensor 4 (DPR inlet).
- The value of the exhaust gas temperature sensor 4 (DPR inlet) is used to control DPR regeneration.

**<Description of malfunction>**

- The exhaust gas temperature cannot be correctly recognized.

**2. DTC set condition**

(1) DTC detection condition

- Battery voltage is in the range of 11 V to 16 V.
- Starter switch ON.
- Engine stall.
- Difference between engine coolant temperature and intake temperature is within ± 8°C {± 14.4 °F}.
- The difference between the engine coolant temperatures before the engine start and after (present) is 30 °C {54 °F} or more.
- Engine coolant temperature and intake temperature are at least -10°C {14°F}.
- Intake air temperature is at least -10°C {14°F}.

(2) Judgment criteria

**The conditions described below remain for 1 second or more.**

- Difference between exhaust gas temperature sensor 1 (ATC upstream) and exhaust gas temperature sensor 2 (ATC downstream) stays less than ±50°C {±90°F}.
- Difference between exhaust gas temperature sensor 2 (ATC downstream) and exhaust gas temperature sensor 3 (DOC inlet) stays less than ±50°C {±90°F}.
- Difference between exhaust gas temperature sensor 3 (DOC inlet) and exhaust gas temperature sensor 4 (DPR inlet) stays more than ±50°C {±90°F}.
- Difference between exhaust gas temperature sensor 4 (DPR inlet) and exhaust gas temperature sensor 5 (DPR outlet) stays more than ±50°C {±90°F}.
  The conditions described above remain for 1 second ore more.

**3. Reset condition**

- Immediately after normal operation is restored.

**4. Indication, warning or system control regulation when the DTC is set.**

- MIL: ON
- SVS light: OFF

**5. Symptoms on the vehicle when the DTC is set**

**<Symptoms on the vehicle due to backup control (fail safe function)>**

- –

**<Symptoms on the vehicle due to malfunction>**

- –

**6. Pre-inspection work**

- Check that the battery voltage is in the normal range.

**7. After-inspection work**

- Clear all past DTCs.
- Check that no DTC is stored after test drive.

**8. Estimated failure factors**

**Exhaust gas temperature sensor 4 (DPR inlet):**

- Disconnected sensor or sensing unit failure (due to dirt, clogging, damage, etc.)
- Abnormal sensor resistance
- Failure of engine ECU sensor power supply

## P246F: Exhaust gas temperature sensor 4 (DPR inlet) - rationality

INFORMATION [While Driving]

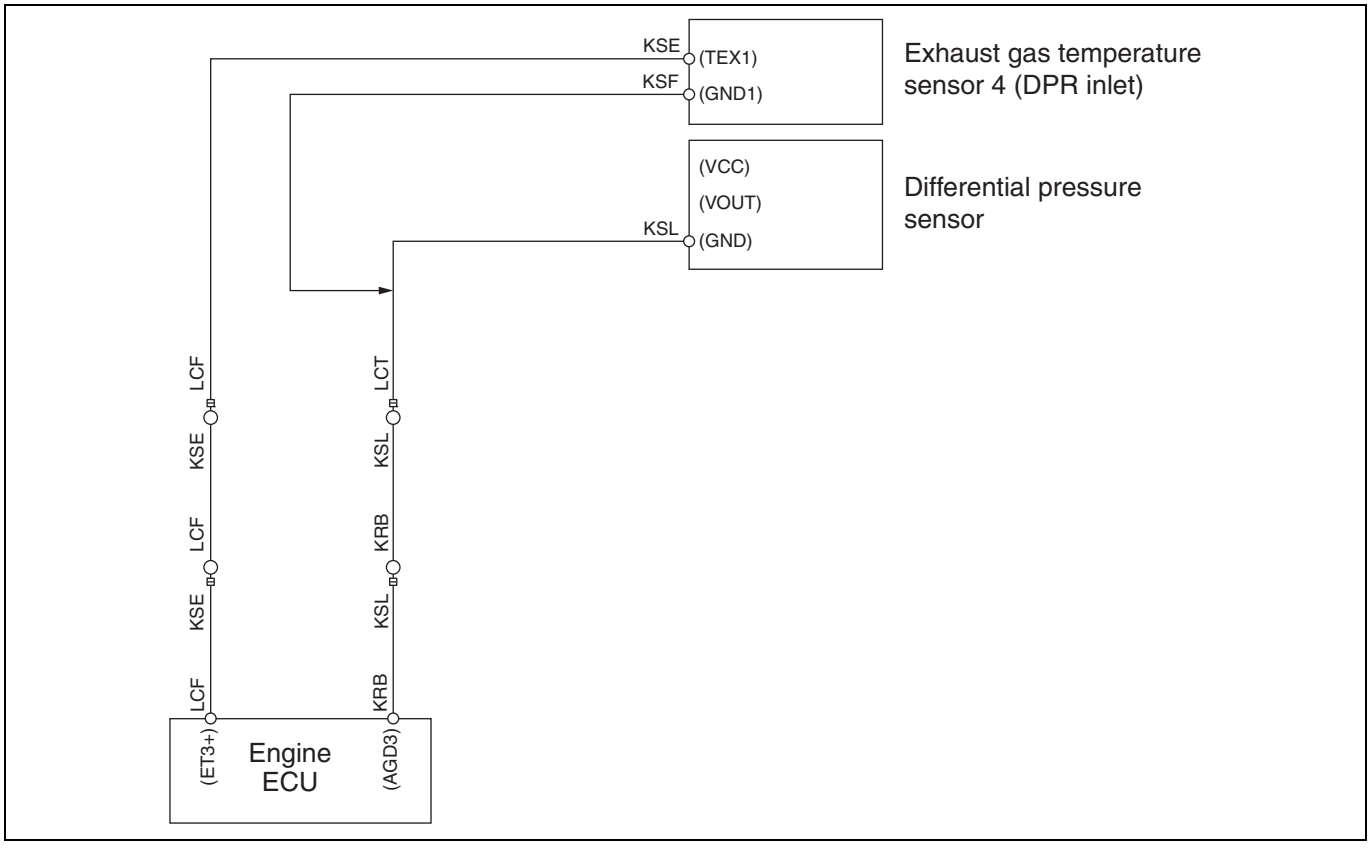


SAPH16F010301304

**1. Technical description**

- The exhaust gas temperature is constantly detected by the exhaust gas temperature sensor 4 (DPR inlet).
- The value of the exhaust gas temperature sensor 4 (DPR inlet) is used to control DPR regeneration.

**<Description of malfunction>**

- The exhaust gas temperature cannot be correctly recognized.

**2. DTC set condition**

(1) DTC detection condition

- At least 10 seconds has elapsed since engine was started.
- The exhaust gas flow rate is 120 kg/h or more and the accumulation is 2 kg or more.
- Cumulative exhaust gas flow amount of 15 kg ore more after regeneration.

**After the above:**

- Battery voltage is in the range of 11 V to 16 V.
- Engine speed ≥ 500 r/min for at least 5 seconds
- Engine speed ≥ 1,750 r/min
- Fuel injection amount ≥ 15 $mm^3$/st
- Exhaust gas flow quantity ≥ 500 kg/h
- Difference between engine coolant temperature and intake temperature is more than ± 8°C {± 14.4°F}
- Exhaust gas temperature sensor 3 (DOC inlet) is valid.

**In addition, the following conditions continue for at least 10 seconds:**

- Engine speed variation is within ± 625 r/min.
- Fuel injection quantity variation is within ± 625 $mm^3$/st sec.
- Vehicle speed ≥ 30 km/h {19 mph}

(2) Judgment criteria

- Difference between calculated value and actual value of DOC outlet temperature stays more than 100°C {180°F}.
  The conditions described above remain for 3 seconds.

**3. Reset condition**

- Immediately after normal operation is restored.

**4. Indication, warning or system control regulation when the DTC is set.**

- MIL: ON
- SVS light: OFF

**5. Symptoms on the vehicle when the DTC is set**

**<Symptoms on the vehicle due to backup control (fail safe function)>**

- –

**<Symptoms on the vehicle due to malfunction>**

- –

**6. Pre-inspection work**

- Check that the battery voltage is in the normal range.

**7. After-inspection work**

- Clear all past DTCs.
- Check that no DTC is detected after test drive.

**8. Estimated failure factors**

**Exhaust gas temperature sensor 4 (DPR inlet):**

- Disconnected sensor or sensing unit failure (due to dirt, clogging, damage, etc.)
- Abnormal sensor resistance
- Failure of engine ECU sensor power supply

## INSPECTION PROCEDURE: P246F

| 1 | Inspect the exhaust gas temperature sensor 4 (DPR inlet) connector |
|---|---|

1. Check the connection of the exhaust gas temperature sensor 4 (DPR inlet) connector (Looseness and poor contact).

**Was any failure found?**

**YES**

**Connect securely, repair if needed.**
**Perform "After-inspection work" of INFORMATION section.**

**NO**

**Go to step 2.**

| 2 | Inspect the exhaust gas temperature sensor 4 (DPR inlet) |
|---|---|

1. Check the installation of the exhaust gas temperature sensor 4 (DPR inlet).
2. Make sure there is no dirt or damage to the exhaust gas temperature sensor 4 (DPR inlet).

**Was any failure found?**

**YES**

**Clean the exhaust gas temperature sensor 4 (DPR inlet) and install it properly.**
**If damaged, replace the exhaust gas temperature sensor 4 (DPR inlet).**
**Perform "After-inspection work" of INFORMATION section.**

**NO**

**Go to step 3.**

## 3 Inspect the exhaust gas temperature sensor 4 (DPR inlet) unit

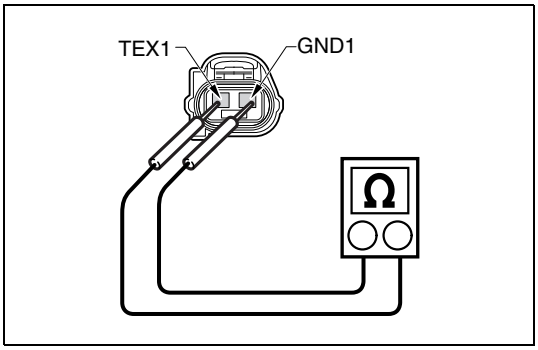


SAPH16F010301305

1. Set the starter switch to the "LOCK" position.
2. Disconnect the exhaust gas temperature sensor 4 (DPR inlet) connector.
3. Use the electrical tester to measure the resistance between the terminals of the exhaust gas temperature sensor 4 (DPR inlet).

| Measurement conditions | Tester connections | Standard values |
|---|---|---|
| Starter switch: LOCK | Exhaust gas temperature sensor 4 (DPR inlet) TEX1 – GND1 | 20 °C {68 °F}: 13.7 — 29.8 kΩ<br>50 °C {122 °F}: 7.13 – 13.7 kΩ<br>80 °C {176 °F}: 4.1 – 7.13 kΩ |

**Do the measurements meet the standard value?**

**YES**

**Go to step 4.**

**NO**

**Replace the exhaust gas temperature sensor 4 (DPR inlet).**
**Perform "After-inspection work" of INFORMATION section.**

## 4 Inspect the sensor power supply

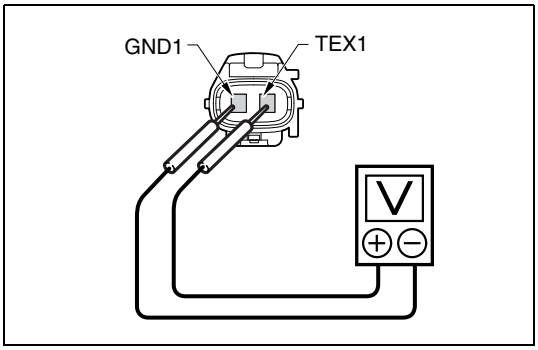


SAPH16F010301306

1. Set the starter switch to the "ON" position.
2. Use the electrical tester to measure the voltage between the terminals of the exhaust gas temperature sensor 4 (DPR inlet) vehicle-side connector.

| Measurement conditions | Tester connections | Standard values |
|---|---|---|
| Starter switch: ON | Exhaust gas temperature sensor 4 (DPR inlet) vehicle-side connector TEX1 – GND1 | 4.5 – 5.5 V |

**Do the measurements meet the standard value?**

**YES**

**Go to step 7.**

**NO**

**Go to step 5.**

## 5 Inspect for short-circuit of the exhaust gas temperature sensor 4 (DPR inlet) harness

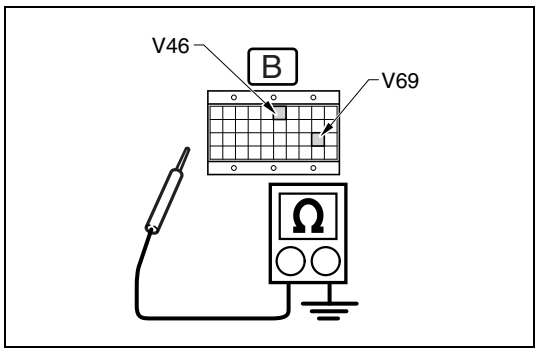


SAPH16F010301307

1. Set the starter switch to the "LOCK" position.
2. Connect the signal check harness to the engine ECU. (Do not connect harness to the ECU.)
3. Use the electrical tester to measure the resistance between the terminals of the engine ECU (signal check harness) and ground.

| Measurement conditions | Tester connections | Standard values |
|---|---|---|
| **Starter switch: LOCK** | **Engine ECU (signal check harness) AGD3(V46) – Ground ET3+(V69) – Ground** | **∞ Ω** |

**Do the measurements meet the standard value?**

**YES**

**Go to step 6.**

**NO**

**Repair or replace the harness.**
**Perform "After-inspection work" of INFORMATION section.**

## 6 Inspect disconnection of the exhaust gas temperature sensor 4 (DPR inlet) harness

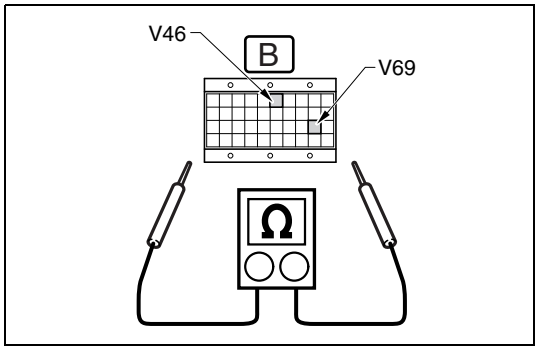


SAPH16F010301308

1. Connect the exhaust gas temperature sensor 4 (DPR inlet) connector.
2. Use the electrical tester to measure the resistance between the terminals of the engine ECU (signal check harness).

| Measurement conditions | Tester connections | Standard values |
|---|---|---|
| **Starter switch: LOCK** | **Engine ECU (signal check harness) AGD3(V46) – ET3+(V69)** | **20 °C {68 °F}: 13.7 – 29.8 kΩ 50 °C {122 °F}: 7.13 – 13.7 kΩ 80 °C {176 °F}: 4.1 – 7.13 kΩ** |

**Do the measurements meet the standard value?**

YES

**Go to step 7.**

NO

**Repair or replace the harness.**
**Perform "After-inspection work" of INFORMATION section.**

| 7 | **Check the DTC detected (Engine ECU) [HINO DX II ]** |
|---|---|

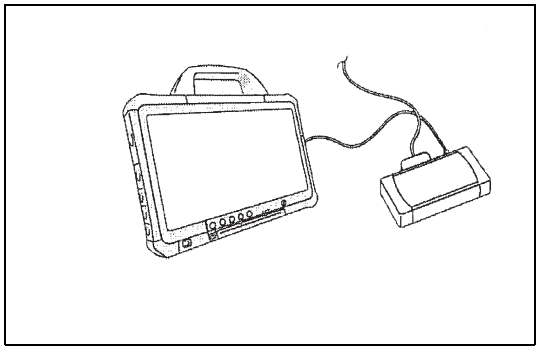

SAPH16F010301309

1. Perform engine warm-up. (engine coolant temperature: 60 °C {140 °F} or more)
2. Stop the engine and set the starter switch to the "LOCK" position.
3. Connect the vehicle to HINO DX II .
4. Set the starter switch to the "ON" position.
5. Select [Engine] and check if P246F has been detected.

**Has DTC P246F been detected?**

YES

**Replace the engine ECU.**
**Perform "After-inspection work" of INFORMATION section.**

NO

**Procedure completed.**
**Perform "After-inspection work" of INFORMATION section.**

# DTC: P2470 and P2471

EN01H16F01030F03001181

## P2470: Exhaust gas temperature sensor 4 (DPR inlet) - out of range (Out of range low)

INFORMATION

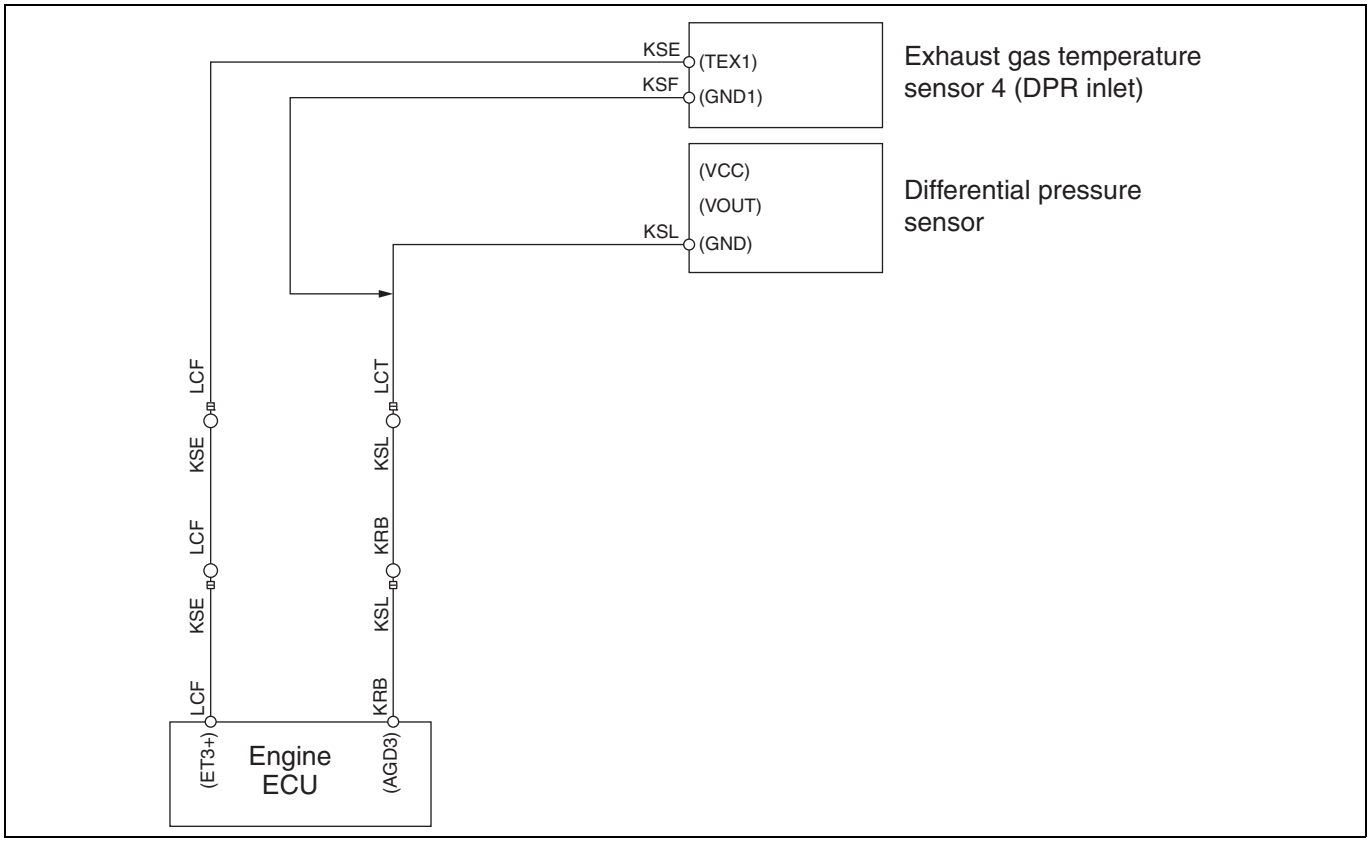


SAPH16F010301310

**1. Technical description**

- The exhaust gas temperature sensor 4 (DPR inlet) consistently detects exhaust gas temperature.
- A reading taken by the exhaust gas temperature sensor 4 (DPR inlet) is used to control DPR regeneration.

**<Description of malfunction>**

- The exhaust gas temperature cannot be correctly recognized.

**2. DTC set condition**

(1) Check conditions

- Battery voltage is in the range of 10 V to 16 V.
- The engine has stopped or runs at 500 r/min or higher for continuous 5 seconds.

(2) Judgment criteria

- Voltage of the exhaust gas temperature sensor 4 (DPR inlet) remains less than 0.0057 V (1,240 °C {2,264 °F}) for 3 seconds.

**3. Reset condition**

- Immediately after normal operation is restored.

**4. Indication, warning or system control regulation when the DTC is set.**

- MIL: ON
- SVS light: OFF

**5. Symptoms on the vehicle when the DTC is set**

**<Symptoms on the vehicle due to backup control (fail safe function)>**

- –

**<Symptoms on the vehicle due to malfunction>**

- –

**6. Pre-inspection work**

- Check that the battery voltage is in the normal range.

**7. After-inspection work**

- Clear all past DTCs.
- Check that no DTC is stored after test drive.

**8. Estimated failure factors**

**Exhaust gas temperature sensor 4 (DPR inlet):**

- Loose/disconnected sensor or failure in sensing area (contamination, clogging or breakage)
- Abnormal resistance of sensor
- Failure in engine ECU sensor power supply
- Disconnection or short-circuit in sensor harness
- Irregular contact (disconnection or poor fit of connector)

## P2471: Exhaust gas temperature sensor 4 (DPR inlet) - out of range (Out of range high)

INFORMATION

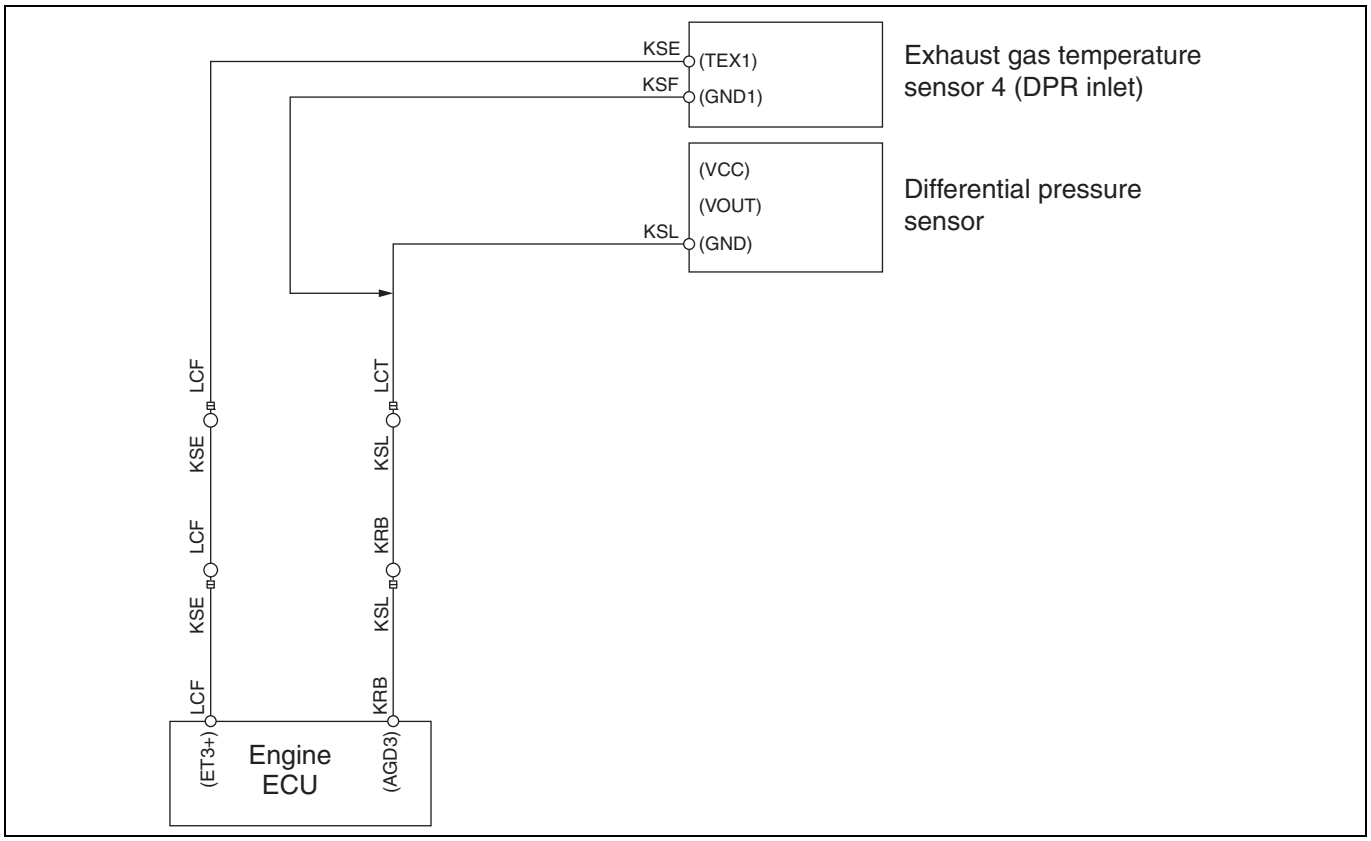


SAPH16F010301311

**1. Technical description**

- The exhaust gas temperature sensor 4 (DPR inlet) consistently detects exhaust gas temperature.
- A reading taken by the exhaust gas temperature sensor 4 (DPR inlet) is used to control DPR regeneration.

**<Description of malfunction>**

- The exhaust gas temperature cannot be correctly recognized.

**2. DTC set condition**

(1) Check conditions

- Intake air temperature is -20 °C {-4 °F} or higher.
- Battery voltage is in the range of 10 V to 16 V.
- The engine has stopped or runs at 500 r/min or higher for continuous 5 seconds.
- No other DTCs are present.

(2) Judgment criteria

- Voltage of the exhaust gas temperature sensor 4 (DPR inlet) remains at 4.958 V or higher (-46 °C {-50.8 °F} or lower) for 3 seconds.

**3. Reset condition**

- Immediately after normal operation is restored.

**4. Indication, warning or system control regulation when the DTC is set.**

- MIL: ON
- SVS light: OFF

**5. Symptoms on the vehicle when the DTC is set**

**<Symptoms on the vehicle due to backup control (fail safe function)>**

- –

**<Symptoms on the vehicle due to malfunction>**

- –

**6. Pre-inspection work**

- Check that the battery voltage is in the normal range.

**7. After-inspection work**

- Clear all past DTCs.
- Check that no DTC is stored after test drive.

**8. Estimated failure factors**

**Exhaust gas temperature sensor 4 (DPR inlet):**

- Loose/disconnected sensor or failure in sensing area (contamination, clogging or breakage)
- Abnormal resistance of sensor
- Short-circuit in the sensor
- Failure in engine ECU sensor power supply
- Disconnection or short-circuit in sensor harness
- Irregular contact (disconnection or poor fit of connector)

## INSPECTION PROCEDURE: P2470 and P2471

| 1 | Inspect the exhaust gas temperature sensor 4 (DPR inlet) connector |
|---|---|

1. Check the connection of the exhaust gas temperature sensor 4 (DPR inlet) connector (Looseness and poor contact).

**Was any failure found?**

**YES**

**Connect securely, repair if needed.**
**Perform "After-inspection work" of INFORMATION section.**

**NO**

**Go to step 2.**

| 2 | Inspect the exhaust gas temperature sensor 4 (DPR inlet) |
|---|---|

1. Check the installation of the exhaust gas temperature sensor 4(DOC outlet).
2. Make sure there is no dirt or damage to the exhaust gas temperature sensor 4 (DPR inlet).

**Was any failure found?**

**YES**

**Clean the exhaust gas temperature sensor 4 (DPR inlet) and install it properly.**
**If damaged, replace the exhaust gas temperature sensor 4 (DPR inlet).**
**Perform "After-inspection work" of INFORMATION section.**

**NO**

**Go to step 3.**

| 3 | Inspect the exhaust gas temperature sensor 4 (DPR inlet) unit |
|---|---|

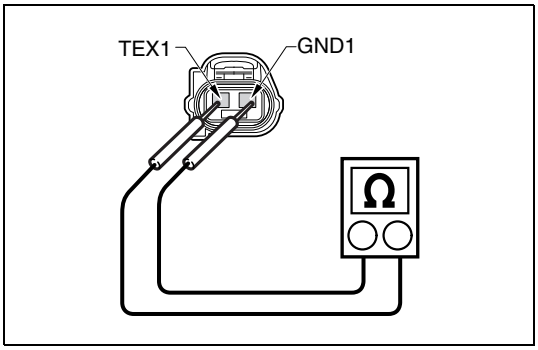

SAPH16F010301312

1. Set the starter switch to the "LOCK" position.
2. Disconnect the exhaust gas temperature sensor 4 (DPR inlet) connector.
3. Use the electrical tester to measure the resistance between the terminals of the exhaust gas temperature sensor 4 (DPR inlet).

| Measurement conditions | Tester connections | Standard values |
|---|---|---|
| Starter switch: LOCK | Exhaust gas temperature sensor 4 (DPR inlet) TEX1 – GND1 | 20 °C {68 °F}: 13.7 – 29.8 kΩ<br>50 °C {122 °F}: 7.13 – 13.7 kΩ<br>80 °C {176 °F}: 4.1 – 7.13 kΩ |

**Do the measurements meet the standard value?**

**YES**

**Go to step 4.**

**NO**

**Replace the exhaust gas temperature sensor 4 (DPR inlet).**
**Perform "After-inspection work" of INFORMATION section.**

| 4 | Inspect the sensor power supply |
|---|---|

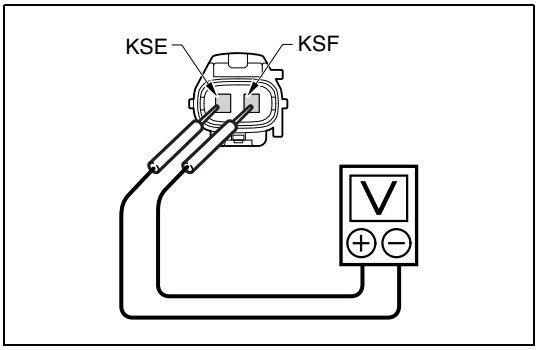

SAPH16F010301313

1. Set the starter switch to the "ON" position.
2. Use the electrical tester to measure the voltage between the terminals of the exhaust gas temperature sensor 4 (DPR inlet) vehicle-side connector.

| Measurement conditions | Tester connections | Standard values |
|---|---|---|
| Starter switch: ON | Exhaust gas temperature sensor 4 (DPR inlet) vehicle-side connector KSE – KSF | 4.5 – 5.5 V |

**Do the measurements meet the standard value?**

**YES**

**Go to step 7.**

**NO**

**Go to step 5.**

## 5 Inspect for short-circuit of the exhaust gas temperature sensor 4 (DPR inlet) harness

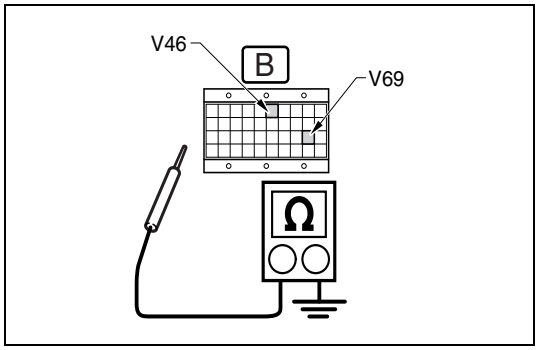


SAPH16F010301314

1. Set the starter switch to the "LOCK" position.
2. Connect the signal check harness to the engine ECU vehicle-side connector. (Do not connect to the ECU.)
3. Use the electrical tester to measure the resistance between the terminals of the engine ECU (signal check harness) and ground.

| Measurement conditions | Tester connections | Standard values |
|---|---|---|
| **Starter switch: LOCK** | **Engine ECU (signal check harness) AGD3(V46) – Ground ET3+(V69) – Ground** | **∞ Ω** |

**Do the measurements meet the standard value?**

**YES**

**Go to step 6.**

**NO**

**Repair or replace the harness.**
**Perform "After-inspection work" of INFORMATION section.**

## 6 Inspect disconnection of the exhaust gas temperature sensor 4 (DPR inlet) harness

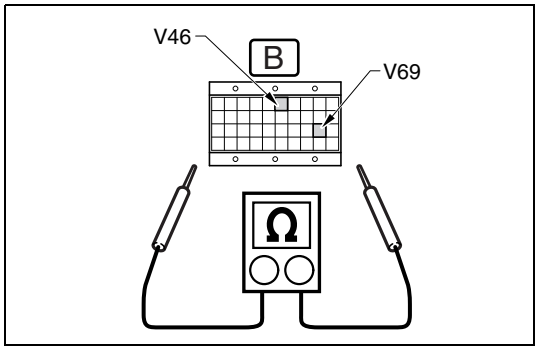


SAPH16F010301315

1. Connect the exhaust gas temperature sensor 4 (DPR inlet) connector.
2. Use the electrical tester to measure the resistance between the terminals of the engine ECU (signal check harness).

| Measurement conditions | Tester connections | Standard values |
|---|---|---|
| **Starter switch: LOCK** | **Engine ECU (signal check harness) AGD3(V46) – ET3+(V69)** | **20 °C {68 °F}: 13.7 – 29.8 kΩ 50 °C {122 °F}: 7.13 – 13.7 kΩ 80 °C {176 °F}: 4.1 – 7.13 kΩ** |

**Do the measurements meet the standard value?**

YES

**Go to step 7.**

NO

**Repair or replace the harness.**
**Perform "After-inspection work" of INFORMATION section.**

| 7 | **Check the DTC detected (Engine ECU) [HINO DX II ]** |
|---|---|

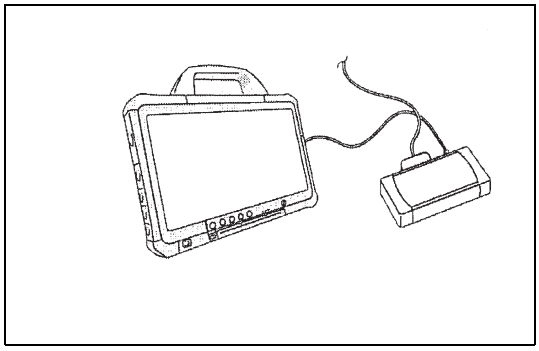

SAPH16F010301316

1. Perform engine warm-up. (engine coolant temperature: 60 °C {140 °F} or more)
2. Stop the engine and set the starter switch to the "LOCK" position.
3. Connect the vehicle to HINO DX II .
4. Set the starter switch to the "ON" position.
5. Select [Engine] and check if the DTC (P2470 or P2471) has been detected.

**Has DTC (P2470 or P2471) been detected?**

YES

**Replace the engine ECU.**
**Perform "After-inspection work" of INFORMATION section.**

NO

**Procedure completed.**
**Perform "After-inspection work" of INFORMATION section.**

# DTC: P2481 and P2482

EN01H16F01030F03001182

## P2481: Exhaust gas temperature sensor 5 (DPR outlet) - out of range (Out of range low)

INFORMATION

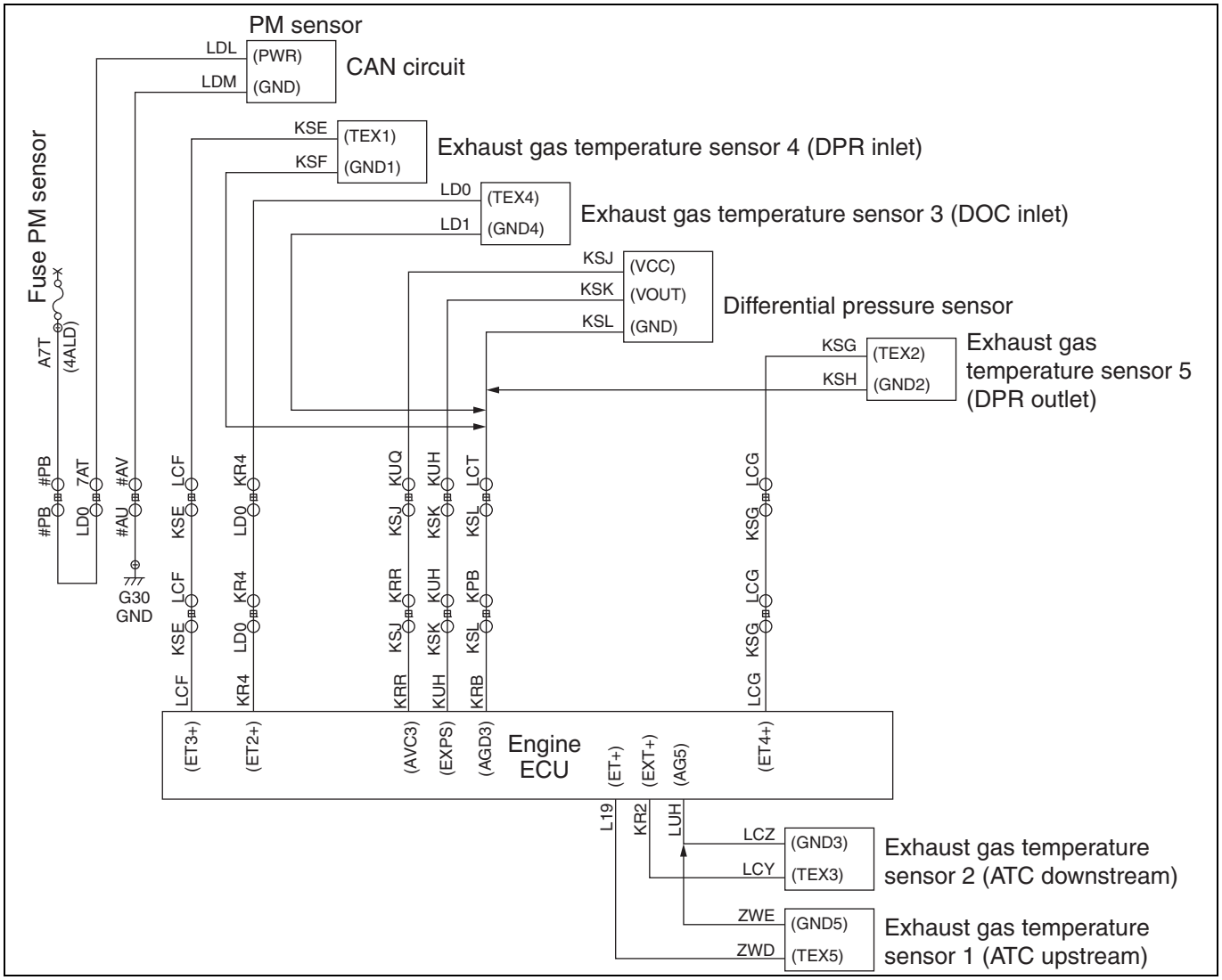


SAPH16F010301317

**1. Technical description**

- The temperature sensor consistently detects exhaust gas temperature.
- A reading taken by the exhaust gas temperature sensor is used to control DPR regeneration.

**<Description of malfunction>**

- Exhaust gas temperature cannot be correctly recognized.

**2. DTC set condition**

(1) DTC detection condition

- Battery voltage is in the range of 10 V to 16 V.
- The engine has stopped or runs at 500 r/min or higher for continuous 5 seconds or longer.

(2) Judgment criteria

- Voltage of the exhaust gas temperature sensor 5 (DPR outlet) remains less than 0.0057 V (1,240 °C {2,264 °F}) for 3 seconds.

**3. Reset condition**

- After restoration to normal condition.

**4. Indication, warning or system control regulation when the DTC is set.**

- MIL: ON
- SVS light: OFF

**5. Symptoms on the vehicle when the DTC is set**

**<Symptoms on the vehicle due to backup control (fail safe function)>**

- –

**<Symptoms on the vehicle due to malfunction>**

- –

**6. Pre-inspection work**

- Check that the battery voltage is in the normal range.

**7. After-inspection work**

- Clear all past DTCs.
- Check that no DTC is stored after test drive.

**8. Estimated failure factors**

**Exhaust gas temperature sensor 5 (DPR outlet):**

- Loose/disconnected sensor or failure in sensing area (contamination, clogging or breakage)
- Abnormal resistance of sensor
- Failure in engine ECU sensor power supply
- Disconnection or short-circuit in sensor harness
- Irregular contact (disconnection or poor fit of connector)
- Short-circuit in the sensor

## P2482: Exhaust gas temperature sensor 5 (DPR outlet) - out of range (Out of range high)

INFORMATION

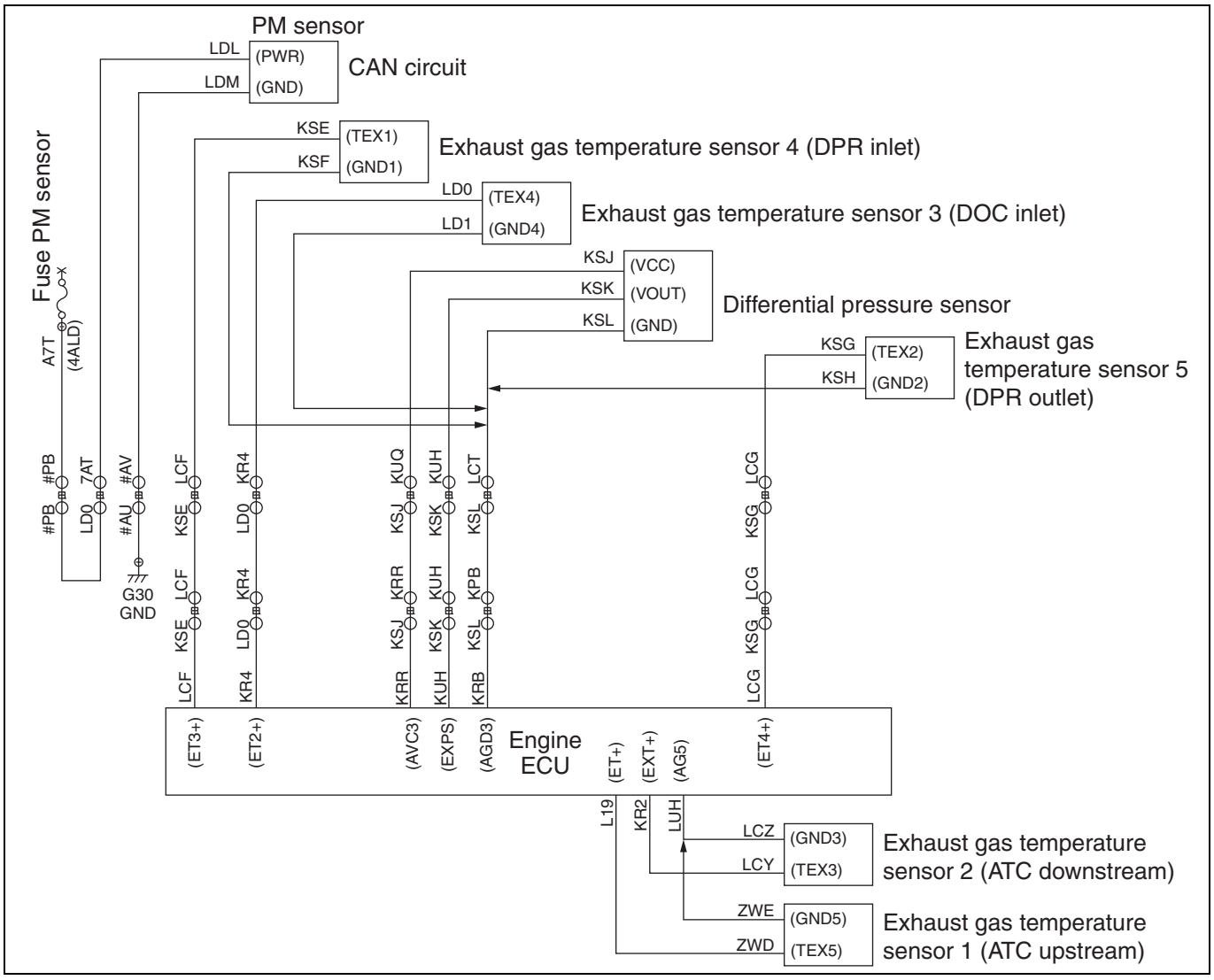


SAPH16F010301318

**1. Technical description**

- The temperature sensor consistently detects exhaust gas temperature.
- A reading taken by the exhaust gas temperature sensor is used to control DPR regeneration.

**<Description of malfunction>**

- Exhaust gas temperature cannot be correctly recognized.

**2. DTC set condition**

(1) DTC detection condition

- Intake air temperature is -20 °C {-4 °F} or higher.
- Battery voltage is in the range of 10 V to 16 V.
- The engine has stopped or runs at 500 r/min or higher for continuous 5 seconds or longer.
- No other DTCs are present.

(2) Judgment criteria

- Voltage of the exhaust gas temperature sensor 5 (DPR outlet) remains at 4.958 V or higher (-46 °C {-50.8 °F} or lower) for 3 seconds.

**3. Reset condition**

- After restoration to normal condition.

**4. Indication, warning or system control regulation when the DTC is set.**

- MIL: ON
- SVS light: OFF

**5. Symptoms on the vehicle when the DTC is set**

**<Symptoms on the vehicle due to backup control (fail safe function)>**

- –

**<Symptoms on the vehicle due to malfunction>**

- –

**6. Pre-inspection work**

- Check that the battery voltage is in the normal range.

**7. After-inspection work**

- Clear all past DTCs.
- Check that no DTC is stored after test drive.

**8. Estimated failure factors**

**Exhaust gas temperature sensor 5 (DPR outlet):**

- Loose/disconnected sensor or failure in sensing area (contamination, clogging or breakage)
- Abnormal resistance of sensor
- Failure in engine ECU sensor power supply
- Disconnection or short-circuit in sensor harness
- Irregular contact (disconnection or poor fit of connector)
- Short-circuit in the sensor

## INSPECTION PROCEDURE: P2481 and P2482

| 1 | Inspect the exhaust gas temperature sensor 5 (DPR outlet) connector |
|---|---|

1. Check the connection of the exhaust gas temperature sensor 5 (DPR outlet) connector (Looseness or poor contact).

**Was any failure found?**

**YES**

**Connect securely, repair if needed.**
**Perform "After-inspection work" of INFORMATION section.**

**NO**

**Go to step 2.**

| 2 | Inspect the exhaust gas temperature sensor 5 (DPR outlet) |
|---|---|

1. Check the installation of the exhaust gas temperature sensor 5 (DPR outlet).
2. Make sure there is no dirt or damage to the exhaust gas temperature sensor 5 (DPR outlet).

**Was any failure found?**

**YES**

**Clean the exhaust gas temperature sensor 5 (DPR outlet) and connect the sensor securely.**
**If damaged, replace the exhaust gas temperature sensor 5 (DPR outlet).**
**Perform "After-inspection work" of INFORMATION section.**

**NO**

**Go to step 3.**

## 3 Inspect the exhaust gas temperature sensor 5 (DPR outlet) unit

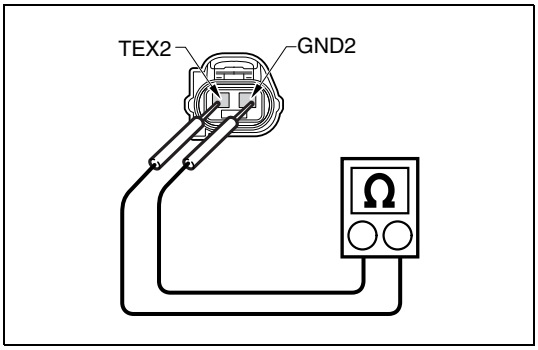

SAPH16F010301319

1. Set the starter switch to the "LOCK" position.
2. Disconnect the exhaust gas temperature sensor 5 (DPR outlet) connector.
3. Use the electrical tester to measure the resistance between the terminals of the exhaust gas temperature sensor 5 (DPR outlet).

| Measurement conditions | Tester connections | Standard values |
|---|---|---|
| Starter switch: LOCK | Exhaust gas temperature sensor 5 (DPR outlet) TEX2 – GND2 | 20 °C {68 °F}: 13.7 – 29.8 kΩ<br>50 °C {122 °F}: 7.13 – 13.7 kΩ<br>80 °C {176 °F}: 4.1 – 7.13 kΩ |

**Do the measurements meet the standard value?**

**YES**

**Go to step 4.**

**NO**

**Replace the exhaust gas temperature sensor 5 (DPR outlet).**
**Perform "After-inspection work" of INFORMATION section.**

## 4 Inspect the exhaust gas temperature sensor 5 (DPR outlet) power supply

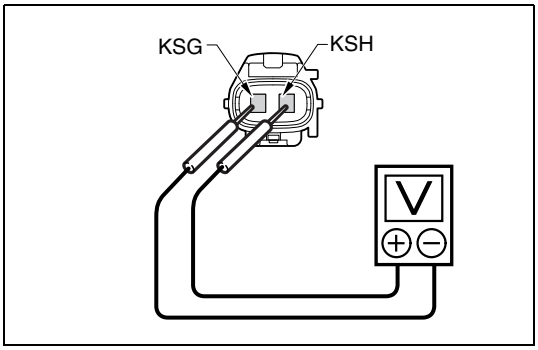

SAPH16F010301320

1. Set the starter switch to the "ON" position.
2. Use the electrical tester to measure the voltage between the terminals of the exhaust gas temperature sensor 5 (DPR outlet).

| Measurement conditions | Tester connections | Standard values |
|---|---|---|
| Starter switch: ON | Exhaust gas temperature sensor 5 (DPR outlet) vehicle-side connector KSH – KSG | 4.5 – 5.5 V |

**Do the measurements meet the standard value?**

**YES**

**Go to step 7.**

**NO**

**Go to step 5.**

## 5 Check short-circuit in wire harness of exhaust gas temperature sensor 5 (DPR outlet)

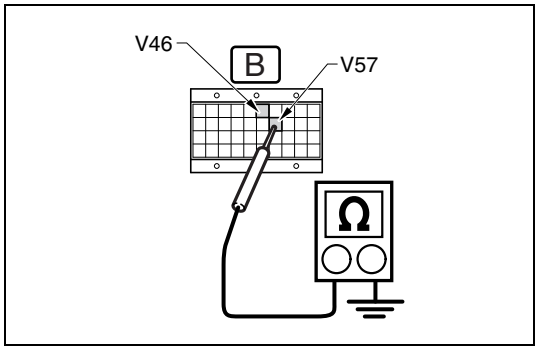


SAPH16F010301321

1. Set the starter switch to the "LOCK" position.
2. Connect the signal check harness to the engine ECU vehicle-side harness. (Do not connect the harness to the ECU.)
3. Use the electrical tester to measure the resistance between the engine ECU (signal check harness) terminals and ground.

| Measurement conditions | Tester connections | Standard values |
|---|---|---|
| **Starter switch: LOCK** | **Engine ECU (signal check harness) AGD3(V46) – Ground ET4+(V57) – Ground** | **∞ Ω** |

**Do the measurements meet the standard value?**

**YES**

**Go to step 6.**

**NO**

**Repair or replace the harness. Perform "After-inspection work" of INFORMATION section.**

## 6 Check disconnection in wire harness of exhaust gas temperature sensor 5 (DPR outlet)

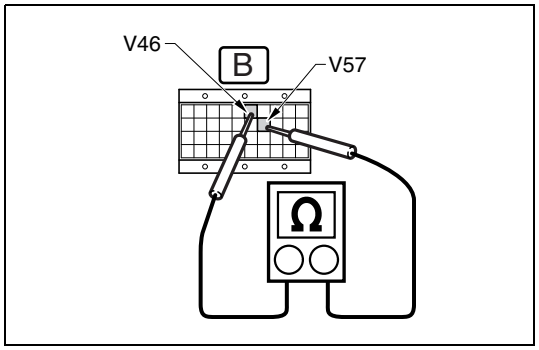


SAPH16F010301322

1. Connect the exhaust gas temperature sensor 5 (DPR outlet) connector.
2. Use the electrical tester to measure the resistance between the terminals of the engine ECU (signal check harness).

| Measurement conditions | Tester connections | Standard values |
|---|---|---|
| **Starter switch: LOCK** | **Engine ECU (signal check harness) AGD3(V46) – ET4+(V57)** | **20 °C {68 °F}: 13.7 – 29.8 kΩ 50 °C {122 °F}: 7.13 – 13.7 kΩ 80 °C {176 °F}: 4.1 – 7.13 kΩ** |

**Do the measurements meet the standard value?**

YES

**Go to step 7.**

NO

**Repair or replace the harness.**
**Perform "After-inspection work" of INFORMATION section.**

| 7 | **Check the DTC detected (Engine ECU) [HINO DX ll ]** |
|---|---|

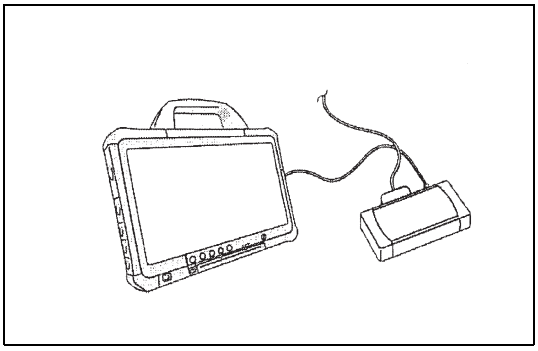

SAPH16F010301323

1. Perform engine warm-up. (engine coolant temperature: 60 °C {140 °F} or more)
2. Stop the engine and set the starter switch to the "LOCK" position.
3. Connect the vehicle to HINO DX II .
4. Set the starter switch to the "ON" position.
5. Select [Engine] and check if the DTC (P2481 or P2482) has been detected.

**Has DTC (P2481 or P2482) been detected?**

YES

**Replace the engine ECU.**
**Perform "After-inspection work" of INFORMATION section.**

NO

**Procedure completed.**
**Perform "After-inspection work" of INFORMATION section.**

# DTC: P2483

EN01H16F01030F03001183

## P2483: Exhaust gas temperature sensor 5 (DPR outlet) - rationality

INFORMATION [at Starter switch on]

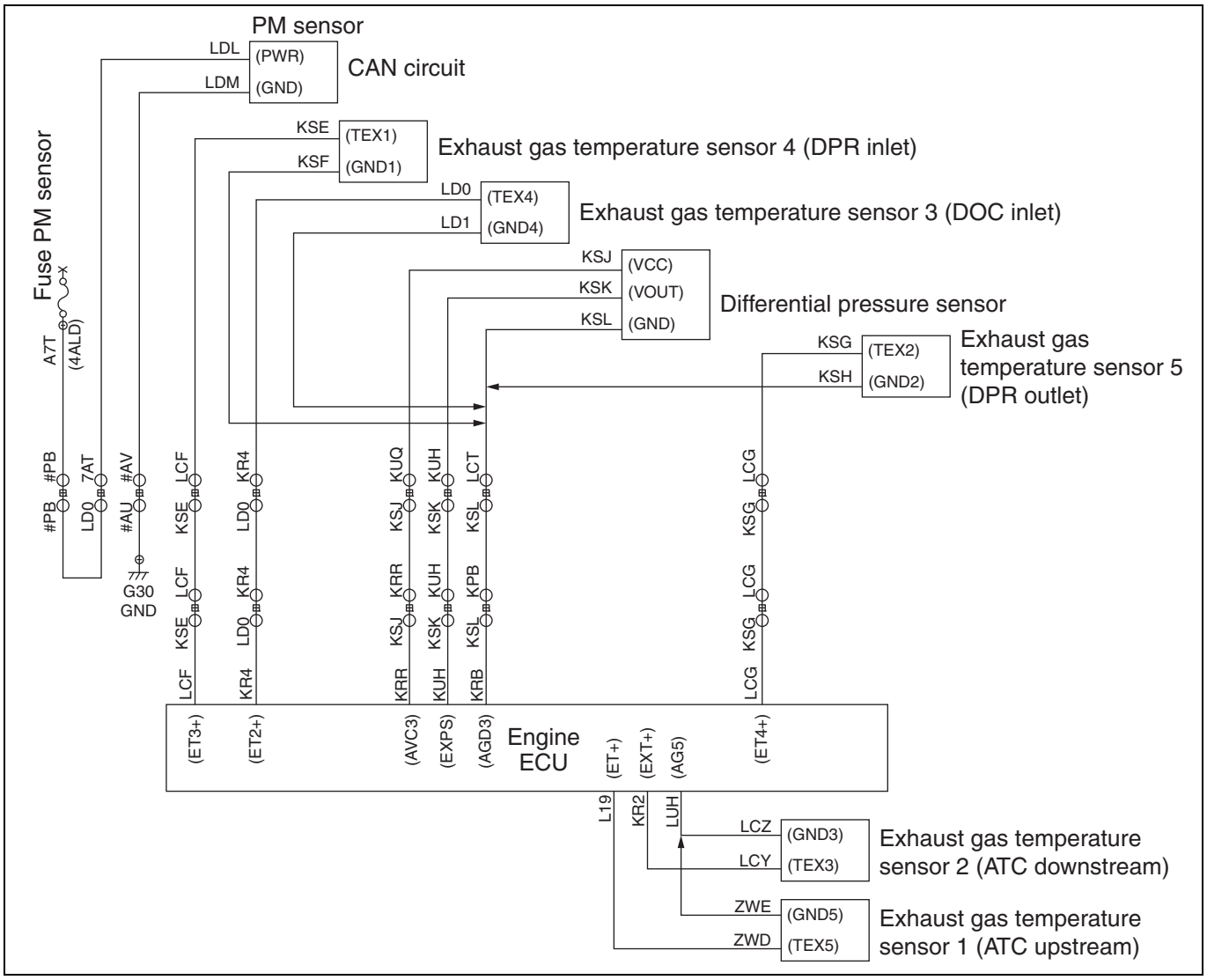


SAPH16F010301324

**1. Technical description**

- The function of the DPR is to regenerate PM, which raises the exhaust gas temperature.
- The value of the exhaust gas temperature sensor 5 (DPR outlet) is used to control DPR regeneration.

**<Description of malfunction>**

- The exhaust gas temperature cannot be correctly recognized.

**2. DTC set condition**

(1) DTC detection condition

- Battery voltage is in the range of 11 V to 16 V.
- Starter switch ON.
- Engine stall.
- Difference between engine coolant temperature and intake temperature is within ±8°C {±14.4°F} for 8 seconds after the engine start.
- The difference between the engine coolant temperatures before the engine start and at present is 30 °C {54 °F} or more.
- Engine coolant temperature is at least -10 °C {-14 °F}.
- Intake air temperature is at least -10 °C {-14 °F}.

(2) Judgment criteria

- Difference between exhaust gas temperature sensor 1 (ATC upstream) and exhaust gas temperature sensor 2 (ATC downstream) is at least ±50°C {±90°F}.
- Difference between exhaust gas temperature sensor 2 (ATC downstream) and exhaust gas temperature sensor 3 (DOC inlet) is at least ±50°C {±90°F}.
- Difference between exhaust gas temperature sensor 3 (DOC inlet) and exhaust gas temperature sensor 4 (DPR inlet) stays less than ±50°C {±90°F}.
- Difference between exhaust gas temperature sensor 4 (DPR inlet) and exhaust gas temperature sensor 5 (DPR outlet) stays more than ±50°C {±90°F}.
  The conditions described above remain for 1 seconds ore more.

**3. Reset condition**

- Immediately after normal operation is restored.

**4. Indication, warning or system control regulation when the DTC is set.**

- MIL: ON
- SVS Light: OFF

**5. Symptoms on the vehicle when the DTC is set**

**<Symptoms on the vehicle due to backup control (fail safe function)>**

- –

**<Symptoms on the vehicle due to malfunction>**

- –

**6. Pre-inspection work**

- Check that the battery voltage is in the normal range.

**7. After-inspection work**

- Clear all past DTCs.
- Check that no DTC is stored after test drive.

**8. Estimated failure factors**

**Exhaust gas temperature sensor 5 (DPR outlet):**

- Disconnected sensor or sensing unit failure (due to dirt, clogging, damage, etc.)
- Abnormal sensor resistance
- Malfunction of engine ECU sensor power supply

## P2483: Exhaust gas temperature sensor 5 (DPR outlet) - rationality

INFORMATION [at engine running]

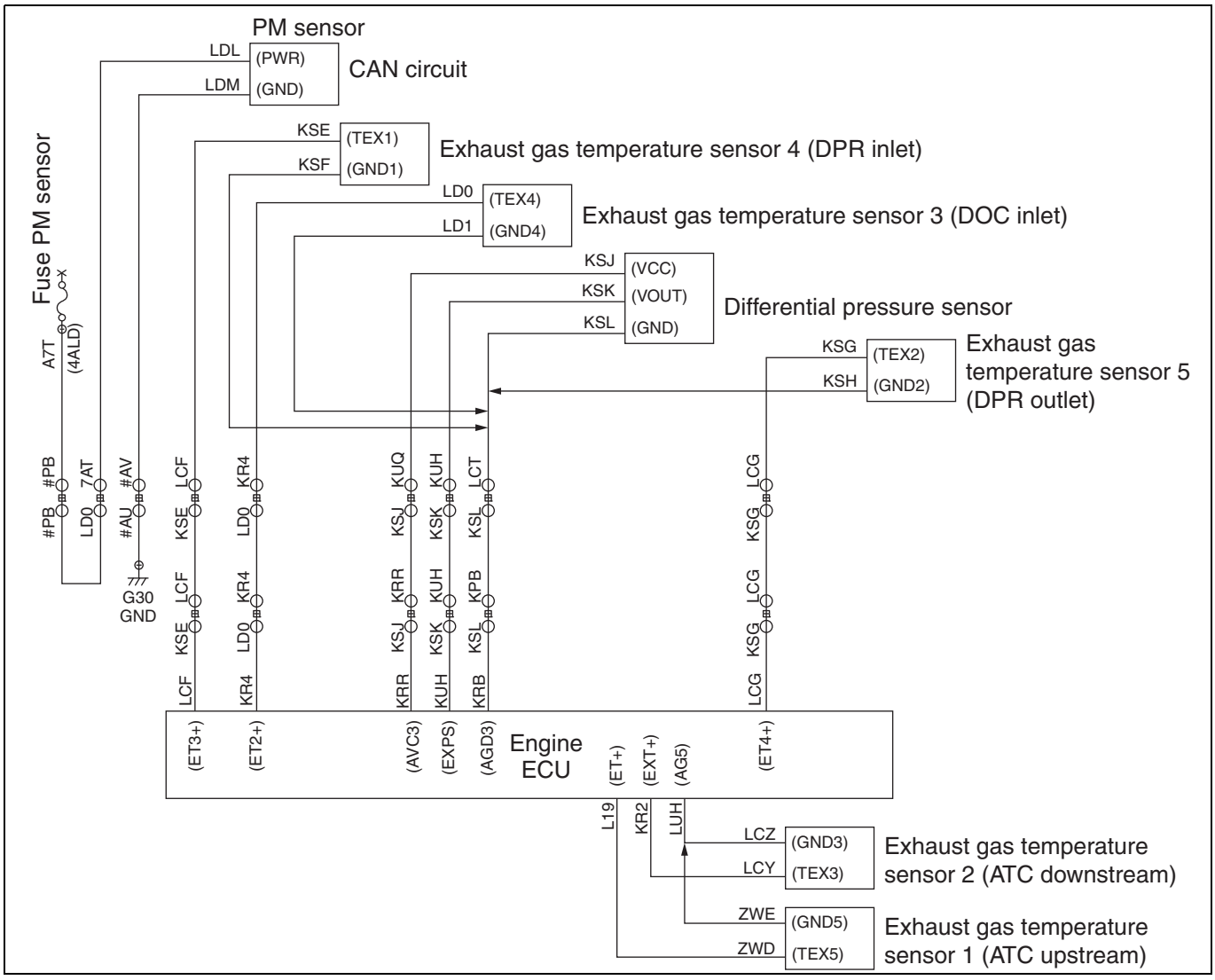


SAPH16F010301325

**1. Technical description**

- The function of the DPR is to regenerate PM, which raises the exhaust gas temperature.
- The value of the exhaust gas temperature sensor 5 (DPR outlet) is used to control DPR regeneration.

**<Description of malfunction>**

- The exhaust gas temperature cannot be correctly recognized.

**2. DTC set condition**

(1) DTC detection condition

- At least 10 seconds has elapsed since engine was started.
- The exhaust gas flow quantity is 120 kg/h or more and the accumulation is 2 kg or more.
- Cumulative exhaust gas flow amount of 15 kg or more with after regeneration.

**After the above:**

- Battery voltage is in the range of 11 V – 16 V.
- The engine speed remains at 500 r/min or more for 5 seconds or more.
- The difference between the engine coolant temperature and intake air temperature is more than 8°C {14.4°F}.
- Exhaust gas flow quantity ≥ 500 kg/h.
- Engine speed ≥ 1,750 r/min.
- Fuel injection amount ≥ 15 $mm^3$/st. cyl.
- Exhaust gas temperature sensor 3 (DOC inlet) is valid.

**In addition, the following conditions continue for at least 10 seconds:**

- Engine speed variation is within 625 r/min.
- Fuel injection quantity variation is within 625 $mm^3$/st. sec
- Vehicle speed ≥ 30 km/h {19 mph}.

(2) Judgment criteria

- Difference between the calculated exhaust gas temperature sensor 5 (DPR outlet) and actual exhaust gas temperature sensor 5 (DPR outlet) stays more than 80°C {144°F}.
  The conditions described above remain for 3 seconds or more.

**3. Reset condition**

- Immediately after normal operation is restored.

**4. Indication, warning or system control regulation when the DTC is set.**

- MIL: ON
- SVS Light: OFF

**5. Symptoms on the vehicle when the DTC is set**

**<Symptoms on the vehicle due to backup control (fail safe function)>**

- –

**<Symptoms on the vehicle due to malfunction>**

- –

**6. Pre-inspection work**

- Check that the battery voltage is in the normal range.

**7. After-inspection work**

- Clear all past DTCs.
- Check that no DTC is stored after test drive.

**8. Estimated failure factors**

**Exhaust gas temperature sensor 5 (DPR outlet):**

- Disconnected sensor or sensing unit failure (due to dirt, clogging, damage, etc.)
- Abnormal sensor resistance
- Malfunction of engine ECU sensor power supply

## INSPECTION PROCEDURE: P2483

| 1 | Check the DTC detected (Engine ECU) [HINO DX II ] |
|---|---|

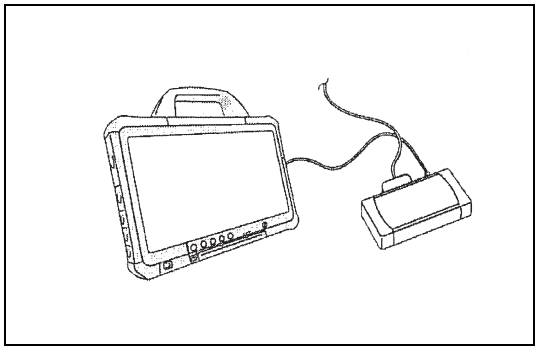

SAPH16F010301326

1. Set the starter switch to the "LOCK" position.
2. Connect the vehicle to HINO DX II .
3. Set the starter switch to the "ON" position.
4. Select [Engine] and check if any DTC other than P2483 has been detected.

**Have DTCs other than P2483 been detected?**

**YES**

**Go to diagnosis procedure of a related DTC.**

**NO**

**Go to step 5.**

| 2 | Inspect the exhaust gas temperature sensor 5 (DPR outlet) connector |
|---|---|

1. Check the connection of the exhaust gas temperature sensor 5 (DPR outlet) connector (Looseness and poor contact).

**Was any failure found?**

**YES**

**Connect securely, repair if needed.**
**Perform "After-inspection work" of INFORMATION section.**

**NO**

**Go to step 2.**

| 3 | Inspect the exhaust gas temperature sensor 5 (DPR outlet) |
|---|---|

1. Check the installation of the exhaust gas temperature sensor 5 (DPR outlet).
2. Make sure there is no dirt or damage to the exhaust gas temperature sensor 5 (DPR outlet).

**Was any failure found?**

**YES**

**Clean the exhaust gas temperature sensor 5 (DPR outlet) and install it properly.**
**If damaged, replace the exhaust gas temperature sensor 5 (DPR outlet).**
**Perform "After-inspection work" of INFORMATION section.**

**NO**

**Go to step 3.**

## 4 Inspect the exhaust gas temperature sensor 5 (DPR outlet) unit

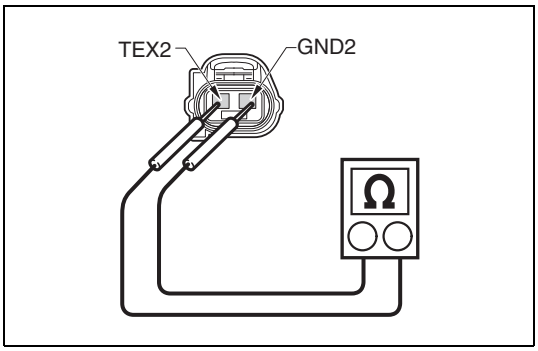

SAPH16F010301327

1. Set the starter switch to the "LOCK" position.
2. Disconnect the exhaust gas temperature sensor 5 (DPR outlet) connector.
3. Use the electrical tester to measure the resistance between the terminals of the exhaust gas temperature sensor 5 (DPR outlet).

| Measurement conditions | Tester connections | Standard values |
|---|---|---|
| Starter switch: LOCK | Exhaust gas temperature sensor 5 (DPR outlet)) TEX2 – GND2 | 20 °C {68 °F}: 13.7 – 29.8 kΩ<br>50 °C {122 °F}: 7.13 – 13.7 kΩ<br>80 °C {176 °F}: 4.1 – 7.13 kΩ |

**Do the measurements meet the standard value?**

**YES**

**Go to step 4.**

**NO**

**Replace the exhaust gas temperature sensor 5 (DPR outlet)**
**Perform "After-inspection work" of INFORMATION section.**

## 5 Inspect the exhaust gas temperature sensor 5 (DPR outlet) power supply

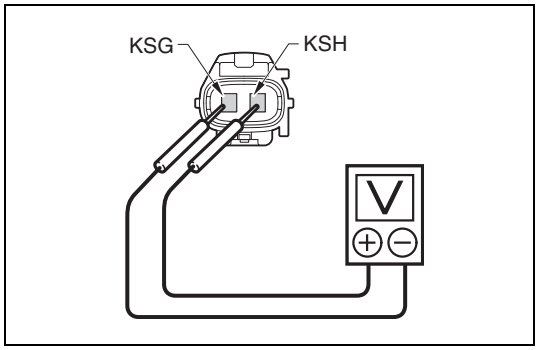


SAPH16F010301328

1. Set the starter switch to the "ON" position.
2. Use the electrical tester to measure the voltage between the terminals of the exhaust gas temperature sensor 5 (DPR outlet) vehicle-side connector.

| Measurement conditions | Tester connections | Standard values |
|---|---|---|
| Starter switch: ON | Exhaust gas temperature sensor 5 (DPR outlet) vehicle-side connector KSG – KSH | 4.5 – 5.5 V |

**Do the measurements meet the standard value?**

**YES**

**Go to step 7.**

**NO**

**Go to step 5.**

## 6 Inspect for short-circuit of the exhaust gas temperature sensor 5 (DPR outlet) harness

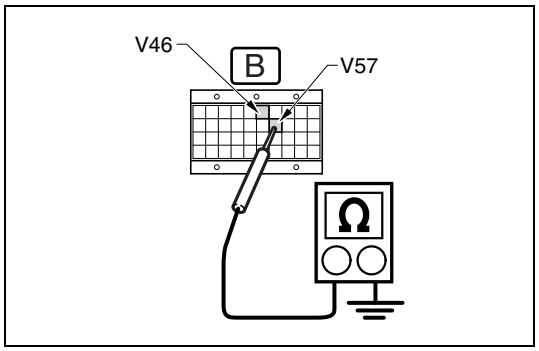


SAPH16F010301329

1. Set the starter switch to the "LOCK" position.
2. Connect the signal check harness to the engine ECU.
3. Use the electrical tester to measure the resistance between the terminals of the engine ECU (signal check harness) and ground.

| Measurement conditions | Tester connections | Standard values |
|---|---|---|
| Starter switch: LOCK | Engine ECU (signal check harness) AGD3(V46) – Ground<br>ET4+(V57) – Ground | ∞ Ω |

**Do the measurements meet the standard value?**

**YES**

**Go to step 6.**

**NO**

**Repair or replace the harness.**
**Perform "After-inspection work" of INFORMATION section.**

## 7 Inspect disconnection of the exhaust gas temperature sensor 5 (DPR outlet) harness

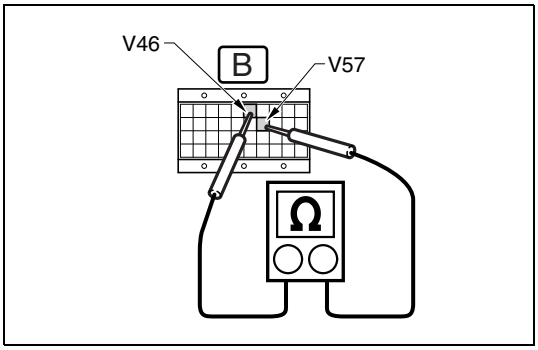

SAPH16F010301330

1. Connect the exhaust gas temperature sensor 5 (DPR outlet) connector.
2. Use the electrical tester to measure the resistance between the terminals of the engine ECU (signal check harness).

| Measurement conditions | Tester connections | Standard values |
|---|---|---|
| **Starter switch: LOCK** | **Engine ECU (signal check harness) AGD3 (V46) – ET4+ (V57)** | **20 °C {68 °F}: 13.7 – 29.8 kΩ 50 °C {122 °F}: 7.13 – 13.7 kΩ 80 °C {176 °F}: 4.1 – 7.13 kΩ** |

**Do the measurements meet the standard value?**

**YES**

**Go to step 7.**

**NO**

**Repair or replace the harness.**
**Perform "After-inspection work" of INFORMATION section.**

## 8 Check the DTC detected (Engine ECU) 2 [HINO DX II ]

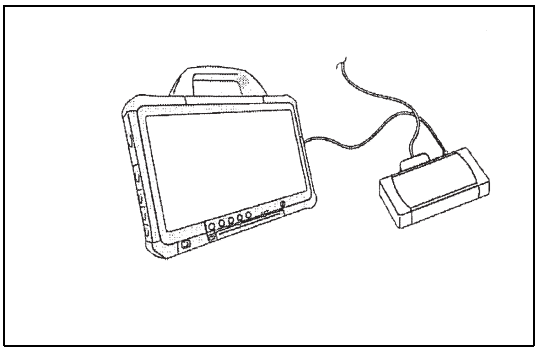
SAPH16F010301331

1. Perform engine warm-up. (engine coolant temperature: 60 °C {140 °F} or more)
2. Stop the engine and set the starter switch to the "LOCK" position.
3. Connect the vehicle to HINO DX II .
4. Set the starter switch to the "ON" position.
5. Select [Engine] and check if P2483 has been detected.

**Has DTC P2483 been detected?**

**YES**

**Replace the engine ECU.**
**Perform "After-inspection work" of INFORMATION section.**

**NO**

**Procedure completed.**
**Perform "After-inspection work" of INFORMATION section.**

# DTC: P24A0

EN01H16F01030F03001184

## P24A0: Abnormality in regeneration FB (Low)

INFORMATION

**1. Technical description**

**<Description of malfunction>**

- The engine ECU detected abnormally low temperature (the value that is too low) at the DPR filter inlet during DPR regeneration.

**2. DTC set condition**

(1) DTC detection condition

- Determined during completion of DPR regeneration with the engine running.
- The exhaust gas flow quantity is 150 kg/h or more.H9
- The engine revolution is 1,000 r/min or more.
- The fuel injection quantity is 30 $mm^3$/st or more.
- The value of the exhaust gas temperature sensor 3 (DOC inlet) is 260 °C {500 °F} or more.
- The value of the exhaust gas temperature sensor 4 (DPR inlet) is 450 °C {842 °F} or more. And, the conditions described below remain for 30 seconds.
- A change in the engine revolution is 625 r/min/sec or less.
- A change in the fuel injection quantity is 625 $mm^3$/sec/st or less.
- The vehicle speed is 18.8 mile/h or more.

(2) Judgment criteria

- The difference between the target temperature for DPR regeneration and the temperature detected at the exhaust gas temperature sensor 4 (DPR inlet) is 130 °C {266 °F} or less, and the difference between the predicted temperature of the exhaust gas temperature sensor 4 (DPR inlet) and the target temperature for DPR regeneration is 130 °C {266 °F} or more.

**3. Reset condition**

- Immediately after normal status is resumed

**4. Indication, warning or system control regulation when the DTC is set.**

- MIL: ON
- SVS light: OFF

**5. Symptoms on the vehicle when the DTC is set**

**<Symptoms on the vehicle due to backup control (fail safe function)>**

- –

**<Symptoms on the vehicle due to malfunction>**

- –

**6. Pre-inspection work**

- Check that the battery voltage is in the normal range.

**7. After-inspection work**

- Clear all past DTCs.
- Check that no DTC is detected after test drive.

**8. Estimated failure factors**

- Malfunction of the fuel dosing valve
- Improper installation of the exhaust gas temperature sensor 4 (DPR inlet), malfunction of the sensor

## INSPECTION PROCEDURE: P24A0

| 1 | Check the DTC detected 1 [HINO DX II ] |
|---|---|

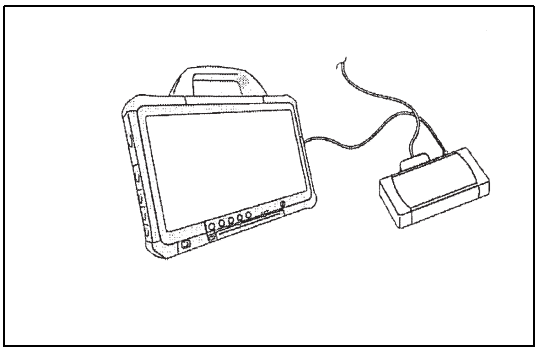

SAPH16F010301332

1. Set the starter switch to the "LOCK" position.
2. Connect the diagnostic system (HINO DX II ) to the vehicle.
3. Set the starter switch to the "ON" position.
4. Select [Engine] on the screen of HINO DX II and check if any below DTCs other than P24A0 has been detected.

- P20D8, P242B, P242D

**Is any DTC other than P24A0 detected?**

**YES**

**Perform the relevant DTC-specific trouble-shooting.**

**NO**

**Go to step 2.**

| 2 | Inspect the exhaust gas temperature sensor 4 (DPR inlet) connector |
|---|---|

1. Inspect the exhaust gas temperature sensor 4 (DPR inlet) connector for improper connection (improper fitting and defective contact).

**Was any failure found?**

**YES**

**Connect securely, repair if necessary.**

**NO**

**Go to step 3.**

| 3 | Inspect the exhaust gas temperature sensor 4 (DPR inlet) |
|---|---|

1. Inspect the exhaust gas temperature sensor 4 (DPR inlet) for improper installation.
2. Check the sensing area of the exhaust gas temperature sensor 4 (DPR inlet) for dirt, clogging, and damage.

**Was any failure found?**

**YES**

**Clean the sensing area and install the sensor properly.**
**If damage is found, replace the sensor.**

**NO**

**Go to step 4.**

| 4 | Check the DTC detected 2 [HINO DX II ] |
|---|---|

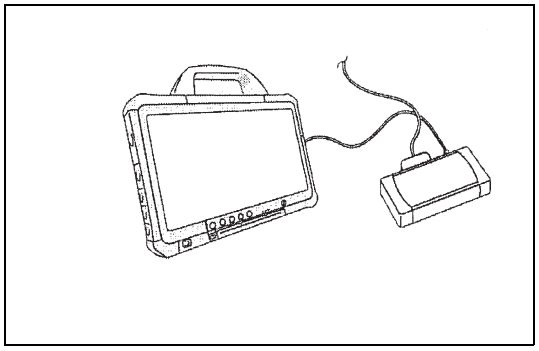

SAPH16F010301333

1. Using the HINO DX II , clear the malfunction history.
2. Perform a DPR forced regeneration.
3. After completion of regeneration, reload the DTC and check if DTC P24A0 has been detected.

**Has DTC P024A0 been detected?**

**YES**

**Replace the fuel dosing valve.**

**NO**

**Procedure completed.**

# DTC: P24A1

EN01H16F01030F03001185

## P24A1: Abnormality in regeneration FB (High)

INFORMATION

**1. Technical description**

**<Description of malfunction>**

- The engine ECU detected abnormally low temperature (the value that is too low) at the DPR filter inlet during DPR regeneration.

**2. DTC set condition**

(1) DTC detection condition

- Determined during completion of DPR regeneration with the engine running.
- The exhaust gas flow quantity is 150 kg/h or more.
- The engine revolution is 1,000 r/min or more.
- The fuel injection quantity is 30 $mm^3$/st or more.
- The value of the exhaust gas temperature sensor 3 (DOC inlet) is 260 °C {500 °F} or more.
- The value of the exhaust gas temperature sensor 4 (DPR inlet) is 450 °C {842 °F} or more. And, the conditions described below remain for 30 seconds.
- A change in the engine revolution is 625 r/min/sec or less.
- A change in the fuel injection quantity is 625 $mm^3$/sec/st or less.
- The vehicle speed is 18.8 mile/h or more.

(2) Judgment criteria

- The difference between the target temperature for DPR regeneration and the temperature detected at the exhaust gas temperature sensor 4 (DPR inlet) is 100 °C {212 °F} or less, and the difference between the predicted temperature of the exhaust gas temperature sensor 4 (DPR inlet) and the target temperature for DPR regeneration is 100 °C {212 °F} or more.

**3. Reset condition**

- Immediately after normal status is resumed

**4. Indication, warning or system control regulation when the DTC is set.**

- MIL: ON
- SVS light: OFF

**5. Symptoms on the vehicle when the DTC is set**

**<Symptoms on the vehicle due to backup control (fail safe function)>**

- –

**<Symptoms on the vehicle due to malfunction>**

- –

**6. Pre-inspection work**

- Check that the battery voltage is in the normal range.

**7. After-inspection work**

- Clear all past DTCs.
- Check that no DTC is detected after test drive.

**8. Estimated failure factors**

- Malfunction of the fuel dosing valve
- Malfunction of the exhaust gas temperature sensor 4 (DPR inlet)

## INSPECTION PROCEDURE: P24A1

| 1 | Check the DTC detected 1 [HINO DX II ] |
|---|---|

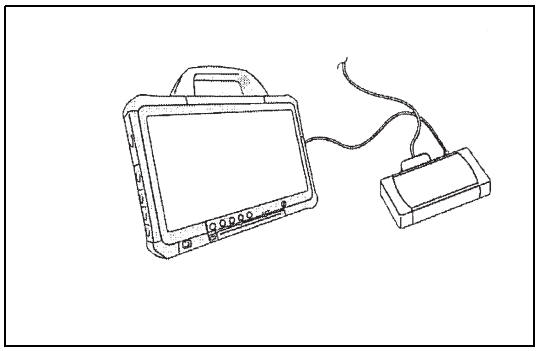

SAPH16F010301334

1. Set the starter switch to the "LOCK" position.
2. Connect the diagnostic system (HINO DX II ) to the vehicle.
3. Set the starter switch to the "ON" position.
4. Select [Engine] on the screen of HINO DX II and check if any below DTCs other than P24A1 has been detected.

- P20CF, P242B, P242C

**Is any DTC other than P24A1 detected?**

**YES**

**Perform the relevant DTC-specific trouble-shooting.**

**NO**

**Go to step 2.**

| 2 | Check the DTC detected 2 [HINO DX II ] |
|---|---|

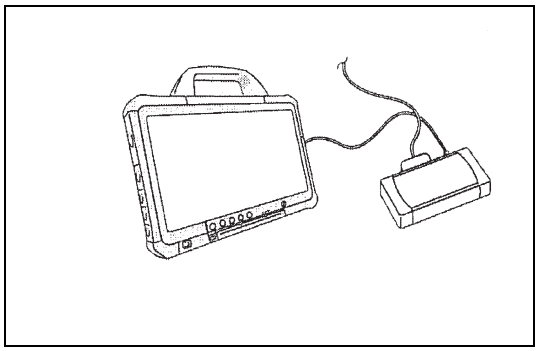

SAPH16F010301335

1. Using the HINO DX II , clear the malfunction history.
2. Perform a DPR forced regeneration.
3. After completion of regeneration, reload the DTC and check if the DTC P24A1 has been detected.

**Has DTC P24A1 been detected?**

**YES**

**Replace the fuel dosing valve.**

**NO**

**Procedure completed.**

# DTC: P24A2

EN01H16F01030F03001186

## P24A2: Excessive fuel dosing quantity

INFORMATION

**1. Technical description**

**<Description of malfunction>**

- The engine ECU monitors accumulate post fuel injection quantity at DPR regeneration.

**2. DTC set condition**

(1) DTC detection condition
- While the engine is in operation

(2) Judgment criteria
- Accumulate post fuel injection quantity exceeds 2,000 cc.

**3. Reset condition**

- Immediately after normal status is resumed.

**4. Indication, warning or system control regulation when the DTC is set.**

- MIL: ON
- SVS light: OFF

**5. Symptoms on the vehicle when the DTC is set**

**<Symptoms on the vehicle due to backup control (fail safe function)>**

- DPR regeneration prohibited.

**<Symptoms on the vehicle due to malfunction>**

- –

**6. Pre-inspection work**

- Check that the battery voltage is in the normal range.

**7. After-inspection work**

- Clear all past DTCs.
- Check that no DTC is stored after test drive.

**8. Estimated failure factors**

- Exhaust gas leakage
- DPR filter damage
- Abnormality in fuel injection quantity
- Improper adjustment of exhaust brake valve
- Malfunction of EGR valve
- Malfunction of VNT actuator
- Failure of exhaust gas temperature sensor 4 (DPR inlet)

## INSPECTION PROCEDURE: P24A2

| 1 | Check the DTC detected [HINO DX II ] |
|---|---|

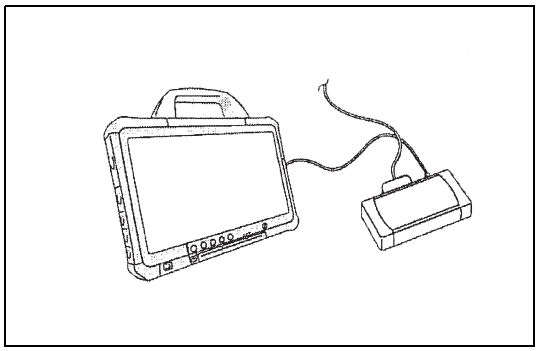

SAPH16F010301336

1. Set the starter switch to the "LOCK" position.
2. Connect the vehicle to HINO DX II .
3. Set the starter switch to the "ON" position.
4. Select [Engine] and check if any below DTC other than P24A2 has been detected.

- P0005, P0006, P0007, P20D8, P20CE

**Has DTC other than P24A2 been detected?**

**YES**

**Go to diagnosis procedure of a related DTC. Perform "After-inspection work" of INFORMATION section.**

**NO**

**Go to step 2.**

| 2 | Inspect the engine oil level |
|---|---|

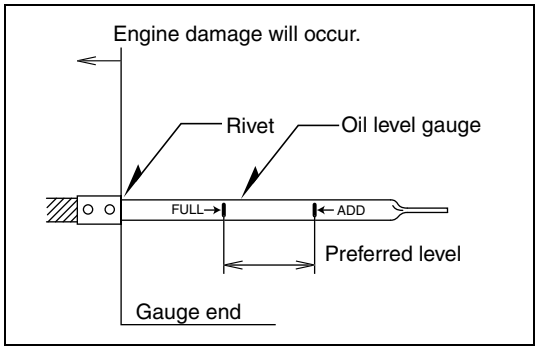


SAPH16F010301337

1. Check the oil level gauge and make sure the engine oil quantity is within the stipulated value.
2. Check the engine oil condition (dirt, viscosity).

**Was any failure found?**

**YES**

**Adjust the engine oil quantity according so that it is within the stipulated value.**
**Change the oil if it is dirty.**
**Perform "After-inspection work" of INFORMATION section.**

**NO**

**Go to step 3.**

| 3 | Inspect the exhaust pipe |
|---|---|

1. Check for exhaust pipe crack, exhaust gas leak (soot contamination) and improper coupling flange tightening.

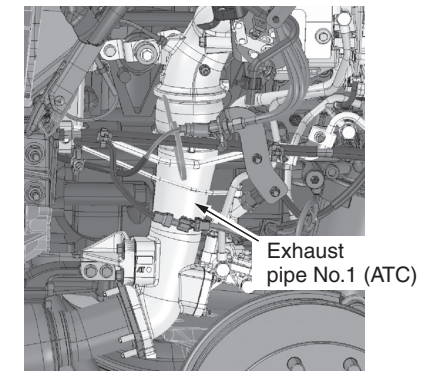


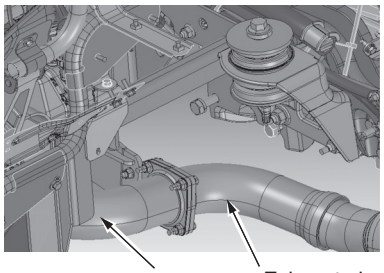


SAPH16F010301338

**Was any failure found?**

**YES**

**Repair or replace the exhaust pipe.**
**Perform "After-inspection work" of INFORMATION section.**

**NO**

**Go to step 4.**

| 4 | Inspect the injector [HINO DX II ] |
|---|---|

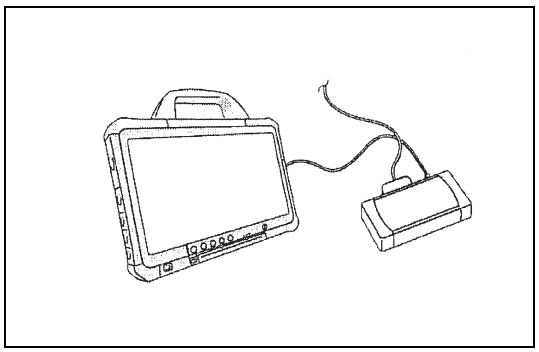

SAPH16F010301339

Check the injection quantity and the rotational fluctuation.

1. Start the engine
2. Select [Injection quantity] from the [Data monitor Setting] menu, and measure the amount of fuel injection.

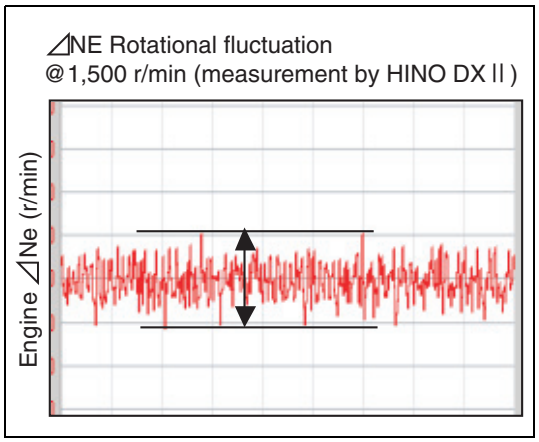


SAPH16F010301340

3. Select [Engine speed] from the [Data monitor Setting] menu, and measure the rotational fluctuation.

| Measurement conditions |
|---|
| • **Engine speed: 1,500 r/min**<br>• **No-load**<br>• **T/M shift lever: Neutral position**<br>• **A/C off and Air compressor un-operating**<br>• **Engine coolant temperature: more than 80 °C {176 °F}** |

**Standard values**

| Type of | Q ($mm^3$/st) | ⊿Ne (r/min) |
|---|---|---|
| MT | 5.0q ≤ | ≤ 26 |
| Allison® 2200 | 6.0q ≤ | |
| Allison® 2500 | | |
| Allison® 3500 | | |

**Do the measurements meet the standard value?**
**(Both the injection quantity and the rotational fluctuation are within the standard values)**

**YES**

**Go to step 5.**

**NO**

**Replace the faulty injector.**
**Perform "After-inspection work" of INFORMATION section.**

| 5 | Inspect the exhaust brake valve [HINO DX II ] |
|---|---|

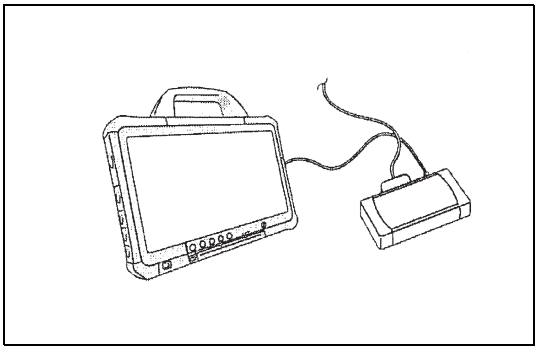

SAPH16F010301342

1. Warm up the engine. (Coolant temperature: 80 °C {176 °F} or more)

2. Turn OFF the devices that place load on the engine, such as the air conditioner.

**<Inspection procedure>**
(1) Select [Engine] on the screen of HINO DX II .
(2) Select [Data monitor Setting and Active test Setting].
(3) Select [Target rpm] from [Active test Setting] and set the engine revolution to 980 r/min.
(4) Select [Injection quantity] from [Data monitor Setting].
(5) Turn ON/OFF the exhaust brake switch, and check the difference between the injection quantity of the injector while the exhaust brake is working and the injection quantity when the exhaust brake is not actuated.

| Measurement conditions | Standard values |
|---|---|
| • **Engine revolution: 980 r/min**<br>• **Engine coolant temperature: 80 °C {176 °F} or more**<br>• **Turn OFF the air conditioner, PTO, and other devices that place load on the engine.** | **10 – 14 $mm^3$/st** |

**Is the measured value within the standard values? (There shall be a change in the injection quantity between while the exhaust brake is working and when it is not actuated.)**

**YES**

**Go to step 6.**

**NO**

**Adjust the butterfly opening of the exhaust brake.**

| 6 | Check the response delay of the EGR valve [HINO DX II ] |
|---|---|

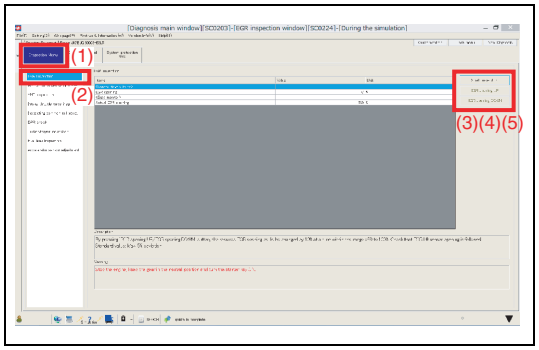


SAPH16F010301343

1. Set the starter switch to the "LOCK" position.
2. Connect the vehicle to HINO DX II .
3. Set the starter switch to the "ON" position.
4. Select [Inspection Menu] and then [EGR inspection] from the menu, then inspect the response delay at the Target EGR position and Actual EGR position.

**⚠ CAUTION**
**Perform the inspection while the engine is stopped to avoid damages.**

<Inspection procedure>
(1) Select [Inspection Menu].
(2) Select [EGR inspection].
(3) Click [Start inspection].
(4) Click [EGR opening UP]:
• Inspect the response delay at each step of the Target EGR position and Actual EGR position from 0 to 100 %.
(5) Click [EGR opening DOWN]:
• Inspect the response delay at each step of the Target EGR position and Actual EGR position from 100 to 0 %.

**HINT**
**The EGR opening position changes of around 10 % per step between 0 – 100 %.**

| Standard values |
|---|
| From the Target EGR position to the Actual EGR position, the response delay should be within 5 seconds. |

**Do the measurements meet the standard value?**

| YES | NO |
|---|---|
| Go to step 7. | Replace the EGR valve.<br>Perform "After-inspection work" of INFORMATION section. |

| 7 | Check the response delay of the VNT controller [HINO DX II ] |
|---|---|

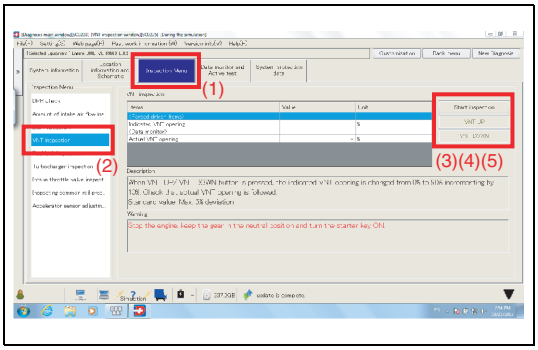


SAPH16F010301344

1. Select [Inspection Menu] from the menu, then inspect the response delay at the Target VNT position and Actual VNT position.

**⚠ CAUTION**
**Perform the inspection while the engine is stopped to avoid damages.**

<Inspection procedure>
(1) Select [Inspection Menu].
(2) Select [VNT inspection].
(3) Click [Start inspection].
(4) Select [VNT UP]:
• Inspect the response delay at each step of the Target VNT position and Actual VNT position from 0 to 90 %.
(5) Select [VNT DOWN]:
• Inspect the response delay at each step of the Target VNT position and Actual VNT position from 90 to 0 %.

**HINT**
**The VNT opening position changes of around 10 % per step between 0 – 90 %.**

| Standard values |
|---|
| **From the Target VNT position to the Actual VNT position, the response delay should be within 3 seconds.** |

**Do the measurements meet the standard value?**

| YES | NO |
|---|---|
| **Go to step 8.** | **Replace the turbocharger. Perform "After-inspection work" of INFORMATION section.** |

| 8 | Inspect the exhaust gas temperature sensor 4 (DPR inlet) |
|---|---|

1. Inspect the exhaust gas temperature sensor 4 (DPR inlet) for improper installation.
2. Check the sensing area of the exhaust gas temperature sensor 4 (DPR inlet) for dirt, clogging, and damage.

**Was any failure found?**

**YES**

**Clean the sensing unit and install it properly. If damaged, replace the sensor.**

**NO**

**Go to step 9.**

| 9 | Inspect the exhaust gas temperature sensor 4 (DPR inlet) unit |
|---|---|

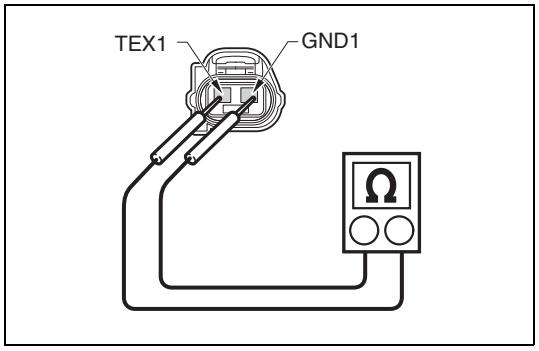

SAPH16F010301345

1. Disconnect the exhaust gas temperature sensor 4 (DPR inlet) connector.
2. Use the electrical tester to measure the resistance between the terminals of the exhaust gas temperature sensor 4 (DPR inlet).

| Measurement conditions | Tester connections | Standard values |
|---|---|---|
| Starter switch: LOCK | Exhaust gas temperature sensor 4 (DPR inlet) TEX1 – GND1 | 20 °C {68 °F}: 13.7 – 29.8 kΩ<br>50 °C {122 °F}: 7.13 – 13.7 kΩ<br>80 °C {176 °F}: 4.1 – 7.13 kΩ |

**Do the measurements meet the standard value?**

**YES**

**Go to step 10.**

**NO**

**Replace the exhaust gas temperature sensor 4 (DPR inlet).**
**Perform "After-inspection work" of INFORMATION section.**

| 10 | Inspect the DPR filter |
|---|---|



Damage

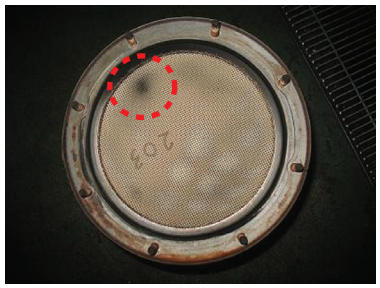

Soot leakage

SAPH16F010301346

1. Remove the DPR filter and check if there is no soot, damages or other abnormalities at its end.

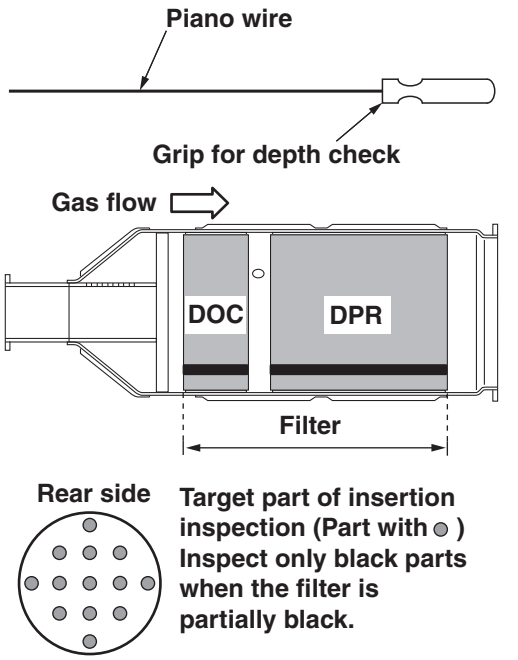


SAPH16F010301347

2. Insert the check probe from the rear surface to inspect the inside.

3. Check probe inserting depth.

| Standard values |
|---|
| 175 - 185 mm {6.890 - 7.283 in.} |

**Was any failure found?**

| YES | NO |
|---|---|
| **Replace the DPR filter and the PM sensor. After replace, perform DPR manual regeneration. Perform "After-inspection work" of INFORMATION section.** | **Go to step 11.** |

| 11 | DPR manual regeneration |
|---|---|

1. Perform DPR manual regeneration, and check succeeded.

**Was DPR regeneration succeeded.**

| YES | NO |
|---|---|
| **Procedure completed.** | **Replace the DPR filter and the PM sensor.** |

# DTC: P24A3

EN01H16F01030F03001187

## P24A3: Abnormal of power supply voltage for PM sensor (High) (2 digit diagnosis code 01)

INFORMATION

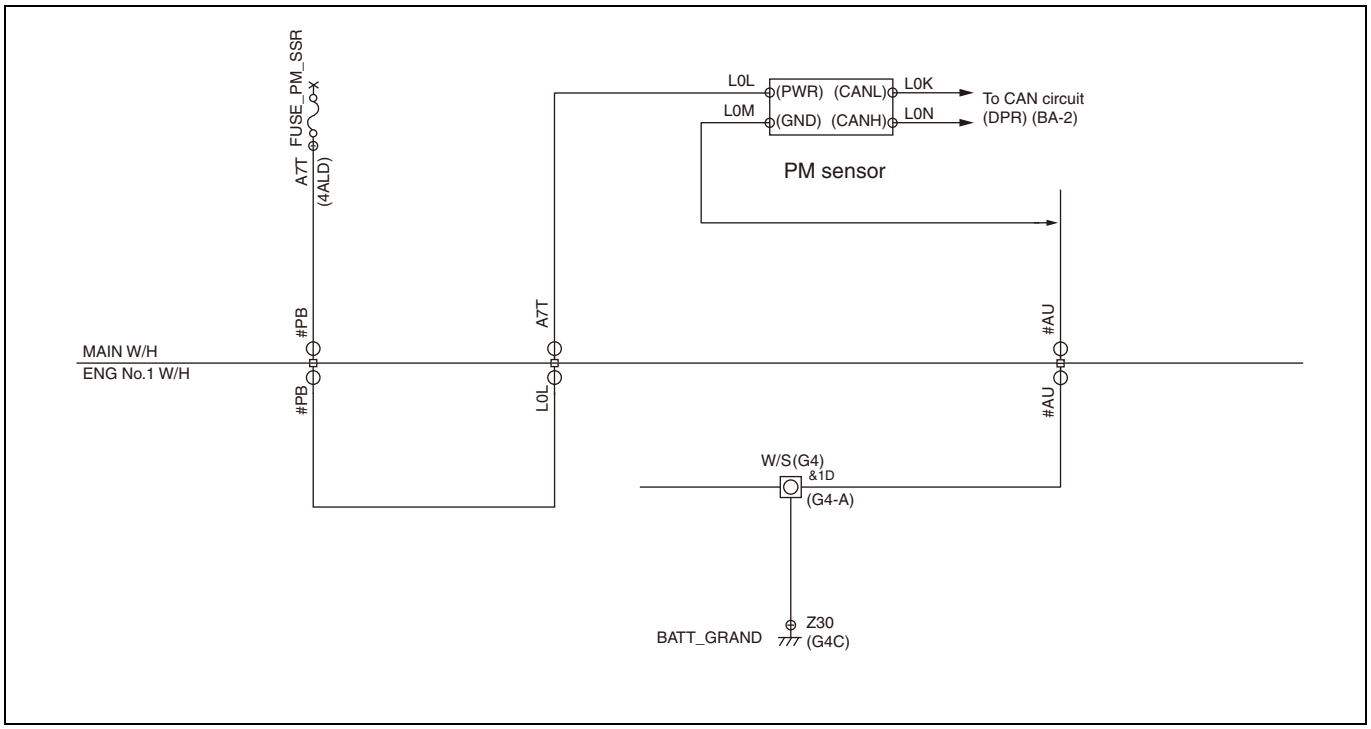


SAPH16F010301348

**1. Technical description**

- Abnormal of power supply voltage for the PM sensor is detected from the self-diagnosis function of the PM sensor.

**<Description of malfunction>**

- Abnormal of the PM sensor is detected.

**2. DTC set condition**

(1) DTC detection condition

- PM sensor is active.
- Battery power supply voltage is in the range of 10 V to 16 V.
- Starter switch remains ON (does not active for starter) for more than 5 seconds.

(2) Judgment criteria

- When the power supply voltage for the PM sensor is more than 16 V, abnormal is detected by the error diagnosis from PM sensor.

**3. Reset condition**

- After normal operation is restored.

**4. Indication, warning or system control regulation when the DTC is set.**

- MIL: ON

**5. Symptoms on the vehicle when the DTC is set**

**<Symptoms on the vehicle due to backup control (fail safe function)>**

- Overlooking of the DPF damage

**<Symptoms on the vehicle due to malfunction>**

- –

**6. Pre-inspection work**

- Check that the battery voltage is in the normal range.

**7. After-inspection work**

- Clear all past DTCs.
- Check that no DTC is stored after test drive.

**8. Estimated failure factors**

- Failure of the PM sensor controller
- Harness failure (disconnection or short-circuit)
- Abnormal of the battery

## INSPECTION PROCEDURE: P24A3 (2 digit diagnosis code 01)

| 1 | Check the DTC detected (Engine ECU) |
|---|---|

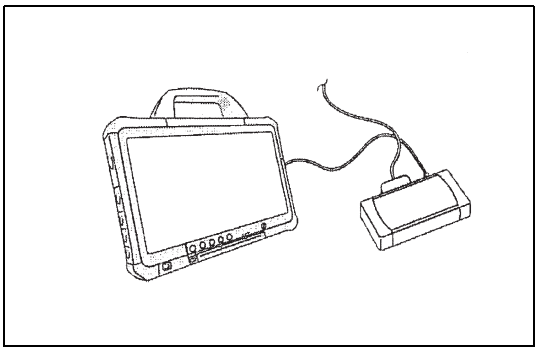

SAPH16F010301349

1. Set the starter switch to the "LOCK" position.
2. Connect the vehicle to HINO DX II .
3. Set the starter switch to the "ON" position.
4. Select [Engine] and check if any DTC other than P24A3 has been detected.

**Has a DTC other than P24A3 been detected?**

**YES**

**Go to the diagnostic procedure of a related DTC.**

**NO**

**Go to step 2.**

| 2 | Inspect the PM sensor power supply |
|---|---|

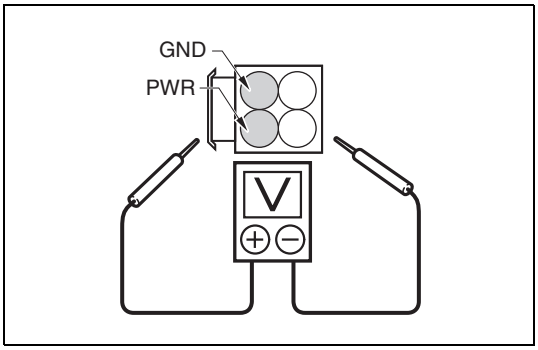


SAPH16F010301350

1. Set the starter switch to the “LOCK” position.
2. Disconnect the connector of the PM sensor.
3. Set the starter switch to the "ON" position.
4. Use the electrical tester to measure the voltage between the terminals of the PM sensor vehicle-side connector.

| Measurement conditions | Tester connections | Standard values |
|---|---|---|
| Starter switch: ON | PM sensor vehicle-side connector 1st (GND) terminal – 3rd (PWR) terminal | 10 – 16 V |

**Do the measurements meet the standard value?**

**YES**

**Go to step 5.**

**NO**

**Check and repair or replace the wire harness and battery, and then go to step 3.**

| 3 | Check the battery |
|---|---|

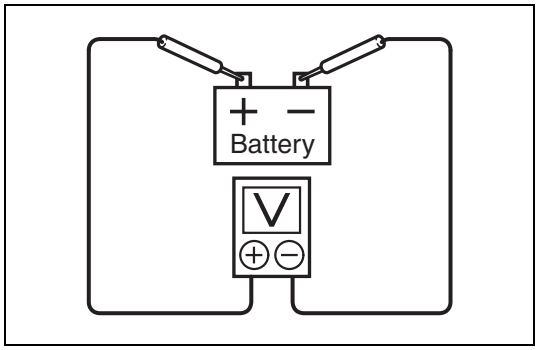


SAPH16F010301351

1. Set the starter switch to the “LOCK” position.
2. Measure the battery voltage using the electrical tester.

| Measurement conditions | Tester connections | Standard values |
|---|---|---|
| Starter switch: LOCK | Battery terminal positive – negative | 12 V |

**Do the measurements meet the standard value?**

**YES**

**Go to step 4.**

**NO**

**Replace the battery, and then go to step 5.**

| 4 | Check to the vehicle wire harness |
|---|---|

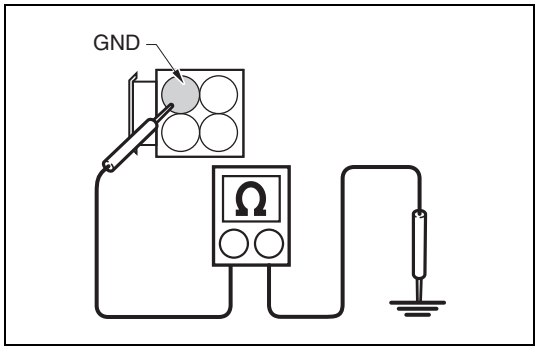


SAPH16F010301352

1. Set the starter switch to the "LOCK" position.
2. Disconnect the PM sensor connector.
3. Use the electrical tester to measure the resistance between the GND terminal of the PM sensor vehicle-side connector and the vehicle GND.

| Measurement conditions | Tester connections | Standard values |
|---|---|---|
| Starter switch: LOCK | PM sensor vehicle-side connector 1st (GND) terminal – Vehicle GND | Less than 1 Ω |

**Do the measurements meet the standard value?**

**YES**

**PM sensor GND circuit of the vehicle-side harness is failure.**
**Repair or replace the harness, clear all past DTCs, and then procedure completed.**
**Perform "After-inspection work" of INFORMATION section.**

**NO**

**PM sensor power supply circuit of the vehicle-side harness is failure.**
**Repair or replace the harness, clear all past DTCs, and then procedure completed.**
**Perform "After-inspection work" of INFORMATION section.**

| 5 | Check the PM sensor [HINO DX ll ] |
|---|---|

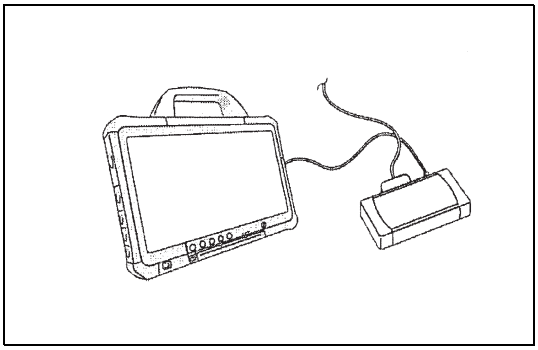

SAPH16F010301353

1. Set the starter switch to the "ON" position.
2. Select [Engine] and check if P24A3 has been detected.

**Has DTC P24A3 been detected?**

**YES**

**Replace the PM sensor.**
**Perform "After-inspection work" of INFORMATION section.**

**NO**

**Clear all past DTCs, and then procedure completed.**
**Perform "After-inspection work" of INFORMATION section.**

# DTC: P24AE

EN01H16F01030F03001188

## P24AE: Abnormal of PM sensor (2 digit diagnosis code 04, 05, 06, 14, 25, 26, 27, 28)

INFOMATION

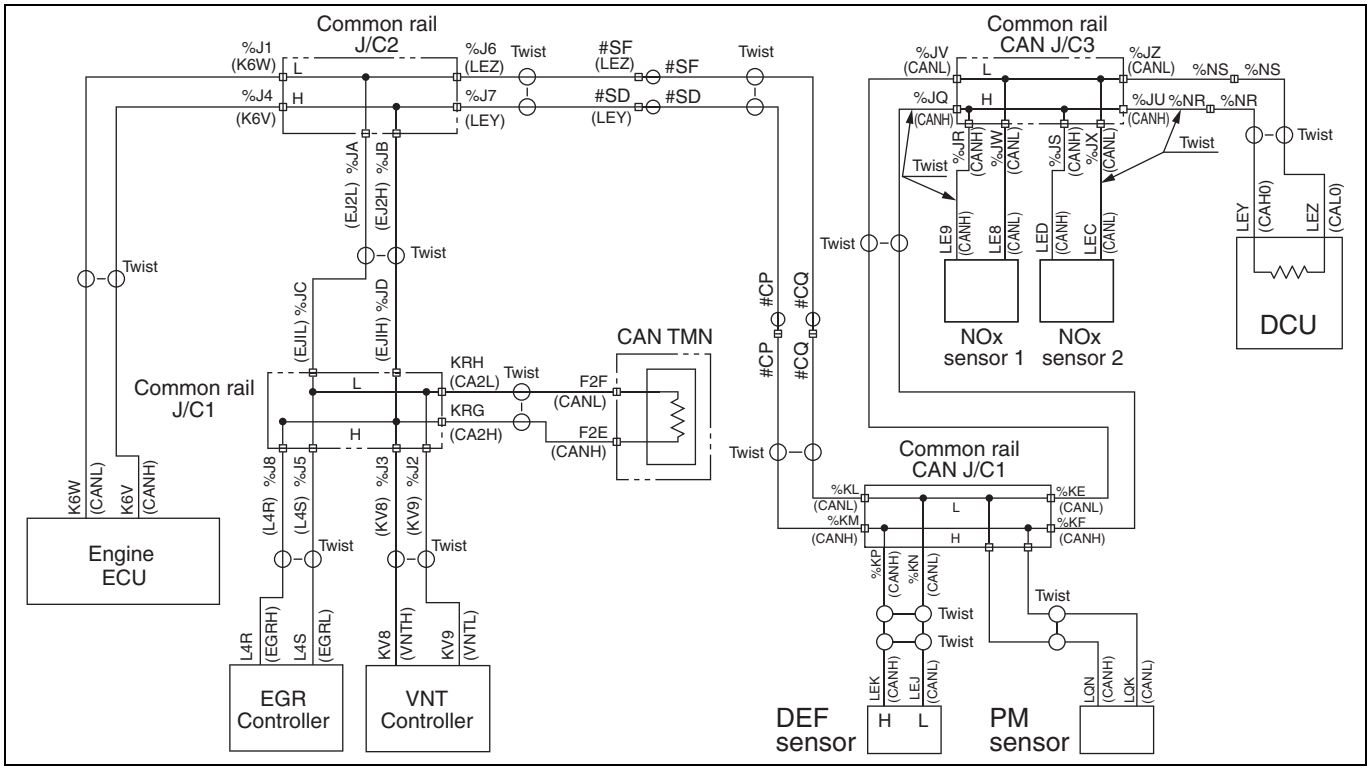


SAPH16F010301354

**1. Technical description**

- Abnormality in the PM sensor controller is detected from the self-diagnosis function of the PM sensor.

**<Description of malfunction>**

- Abnormal of the PM sensor is detected.

**2. DTC set condition**

(1) DTC detection condition

- PM sensor is active.
- Battery power supply voltage is in the range of 10 V to 16 V.
- Starter switch remains ON (does not active for starter) for more than 5 seconds.

(2) Judgment criteria

- Abnormal is detected by the error diagnosis of the PM sensor.

**3. Reset condition**

- After normal operation is restored and the starter switch is turned LOCK.

**4. Indication, warning or system control regulation when the DTC is set.**

- MIL: ON

**5. Symptoms on the vehicle when the DTC is set**

**<Symptoms on the vehicle due to backup control (fail safe function)>**

- Overlooking of the DPF damage

**<Symptoms on the vehicle due to malfunction>**

- –

**6. Pre-inspection work**

- Check that the battery voltage is in the normal range.

**7. After-inspection work**

- Clear all past DTCs.
- Check that no DTC is stored after test drive.

**8. Estimated failure factors**

- Failure of the PM sensor

## INSPECTION PROCEDURE: P24AE (2 digit diagnosis code 04, 05, 06)

| 1 | Check the DTC detected (Engine ECU) |
|---|---|

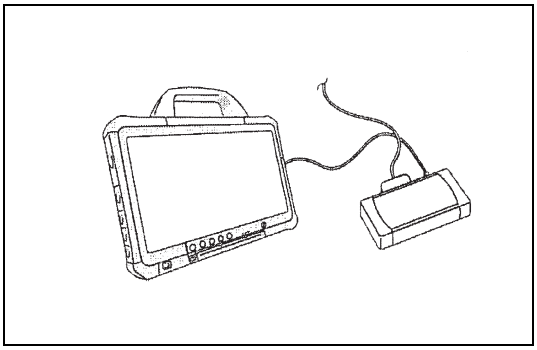

SAPH16F010301355

1. Set the starter switch to the "LOCK" position.
2. Connect the vehicle to HINO DX II .
3. Set the starter switch to the "ON" position.
4. Select [Engine] and check if any DTC other than P24AE has been detected.

**Has a DTC other than P24AE been detected?**

**YES**

**Go to the diagnostic procedure of a related DTC.**

**NO**

**Go to step 2.**

| 2 | Inspect the PM sensor power supply |
|---|---|

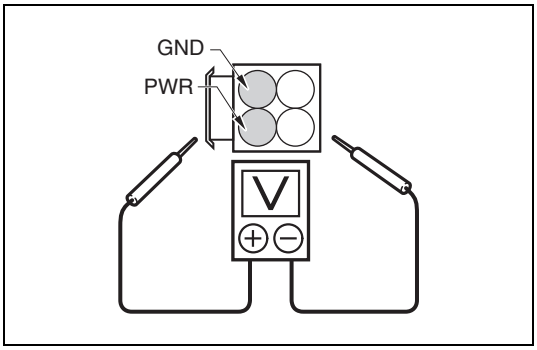


SAPH16F010301356

1. Set the starter switch to the “LOCK” position.
2. Disconnect the connector of the PM sensor.
3. Set the starter switch to the "ON" position.
4. Use the electrical tester to measure the voltage between the terminals of the PM sensor vehicle-side connector.

| Measurement conditions | Tester connections | Standard values |
|---|---|---|
| Starter switch: ON | PM sensor vehicle-side connector 1st (GND) terminal – 3rd (PWR) terminal | 10 – 16 V |

**Do the measurements meet the standard value?**

**YES**

**Go to step 5.**

**NO**

**Check and repair or replace the wire harness, and then go to step 3.**

| 3 | Check the battery |
|---|---|

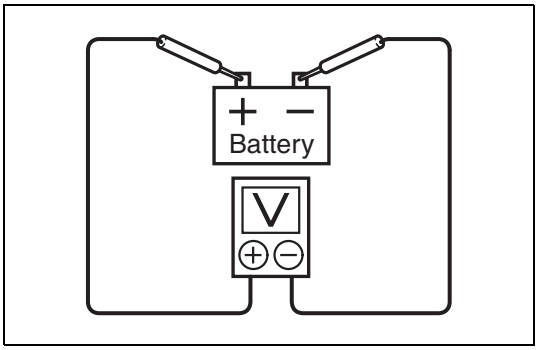


SAPH16F010301357

1. Set the starter switch to the “LOCK” position.
2. Measure the battery voltage using the electrical tester.

| Measurement conditions | Tester connections | Standard values |
|---|---|---|
| Starter switch: LOCK | Battery terminal positive – negative | 12 V |

**Do the measurements meet the standard value?**

**YES**

**Go to step 4.**

**NO**

**Replace the battery, and then go to step 5.**

| 4 | Check the vehicle wire harness |
|---|---|

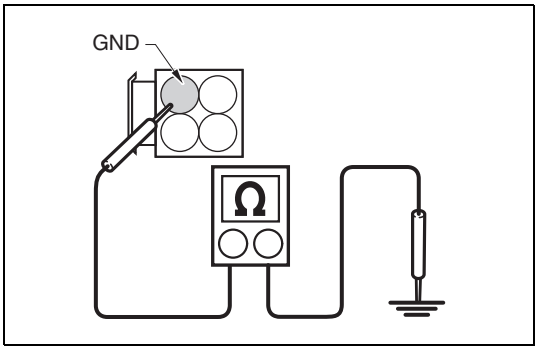


SAPH16F010301358

1. Set the starter switch to the "LOCK" position.
2. Disconnect the PM sensor connector.
3. Use the electrical tester to measure the resistance between the GND terminal of the PM sensor vehicle-side connector and the vehicle GND.

| Measurement conditions | Tester connections | Standard values |
|---|---|---|
| Starter switch: LOCK | PM sensor vehicle-side connector 1st (GND) terminal –Vehicle GND | Less than 1 Ω |

**Do the measurements meet the standard value?**

**YES**

**PM sensor GND circuit of the vehicle-side harness is failure.**
**Repair or replace the harness, clear all past DTCs, and then procedure completed.**
**Perform "After-inspection work" of INFORMATION section.**

**NO**

**PM sensor power supply circuit of the vehicle-side harness is failure.**
**Repair or replace the harness, clear all past DTCs, and then procedure completed.**
**Perform "After-inspection work" of INFORMATION section.**

| 5 | Check the PM sensor [HINO DX ll ] |
|---|---|

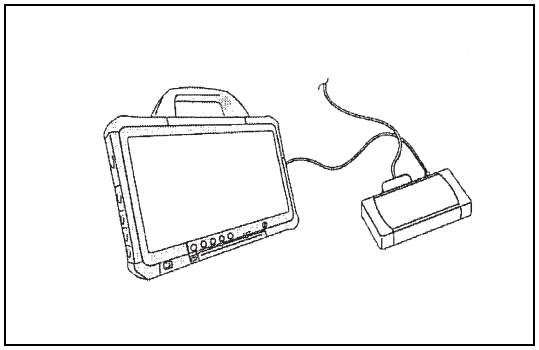

SAPH16F010301359

1. Set the starter switch to the "ON" position.
2. Select [Engine] and check if P24AE has been detected.

**Has DTC P24AE been detected?**

**YES**

**Replace the PM sensor.**
**Perform "After-inspection work" of INFORMATION section.**

**NO**

**Clear all past DTCs, and then procedure completed.**
**Perform "After-inspection work" of INFORMATION section.**

## INSPECTION PROCEDURE: P24AE (2 digit diagnosis code 14, 26, 27, 28)

| 1 | Check the DTC detected (Engine ECU) [HINO DX II ] |
|---|---|

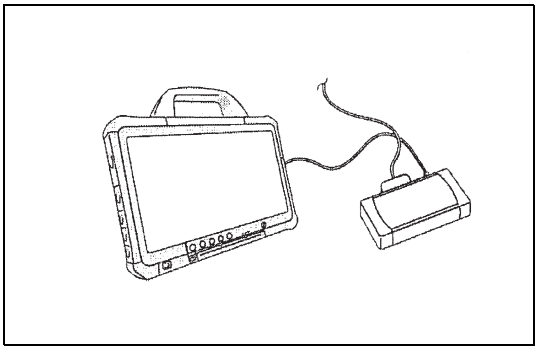

SAPH16F010301360

1. Set the starter switch to the "LOCK" position.
2. Connect the vehicle to HINO DX II .
3. Set the starter switch to the "ON" position.
4. Select [Engine] and check if any DTC other than P24AE has been detected.

**Has a DTC other than P24AE been detected?**

**YES**

**Replace the PM sensor.**
**Clear all past DTCs, and then procedure completed.**
**Perform “after-inspection work” of INFORMATION section.**

**NO**

**Clear all past DTCs, and then procedure completed.**
**Perform “after-inspection work” of INFORMATION section.**

## INSPECTION PROCEDURE: P24AE (2 digit diagnosis code 25)

| 1 | Check the DTC detected (Engine ECU) [HINO DX II ] |
|---|---|

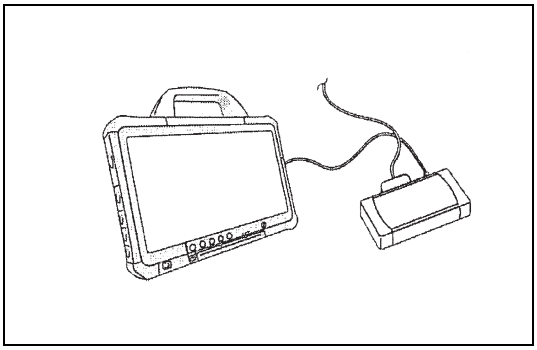

SAPH16F010301361

1. Set the starter switch to the "LOCK" position.
2. Connect the vehicle to HINO DX II .
3. Set the starter switch to the "ON" position.
4. Select [Engine] and check if any DTC other than P24AE has bee detected.

**Has a DTC other than P24AE been detected?**

**YES**

**Go to the diagnostic procedure of a related DTC.**

**NO**

**Go to step 2.**

| 2 | Inspect the DPR filter |
|---|---|



Damage

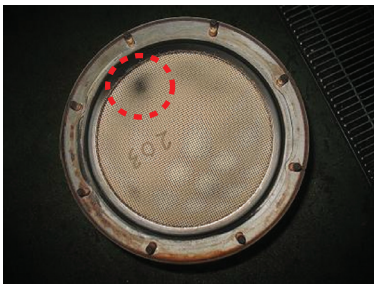

Soot leakage

SAPH16F010301362

1. Remove the DPR filter and check if there is no soot, damages or other abnormalities at its end.

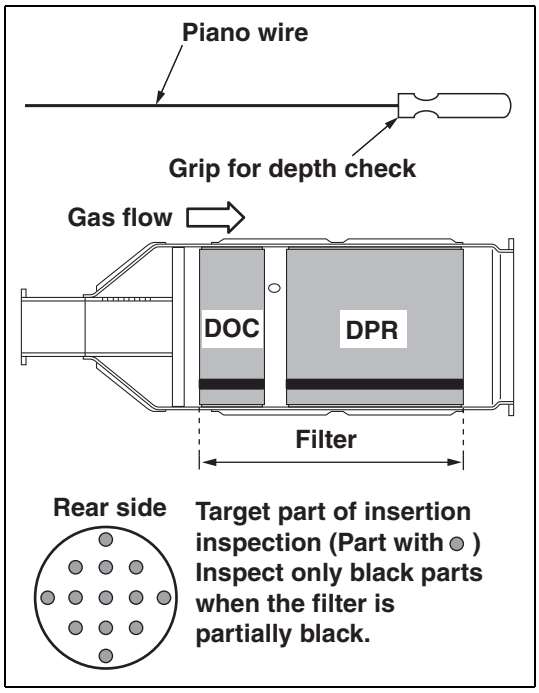


SAPH16F010301363

2. Insert the check probe from the rear surface to inspect the inside.
3. Check probe inserting depth.

| Standard values |
|---|
| 175 - 185 mm {6.890 - 7.283 in.} |

**Was any failure found?**

**YES**

**Replace the DPR filter and the PM sensor.**
**Perform "After-inspection work" of INFORMATION section.**

**NO**

**Replace the PM sensor.**
**Clear all past DTCs, and then procedure completed.**
**Perform "After-inspection work" of INFORMATION section.**

# DTC: P24AF

EN01H16F01030F03001189

## P24AF: PM sensor circuit range / performance (2 digit diagnosis code 23)

INFORMATION

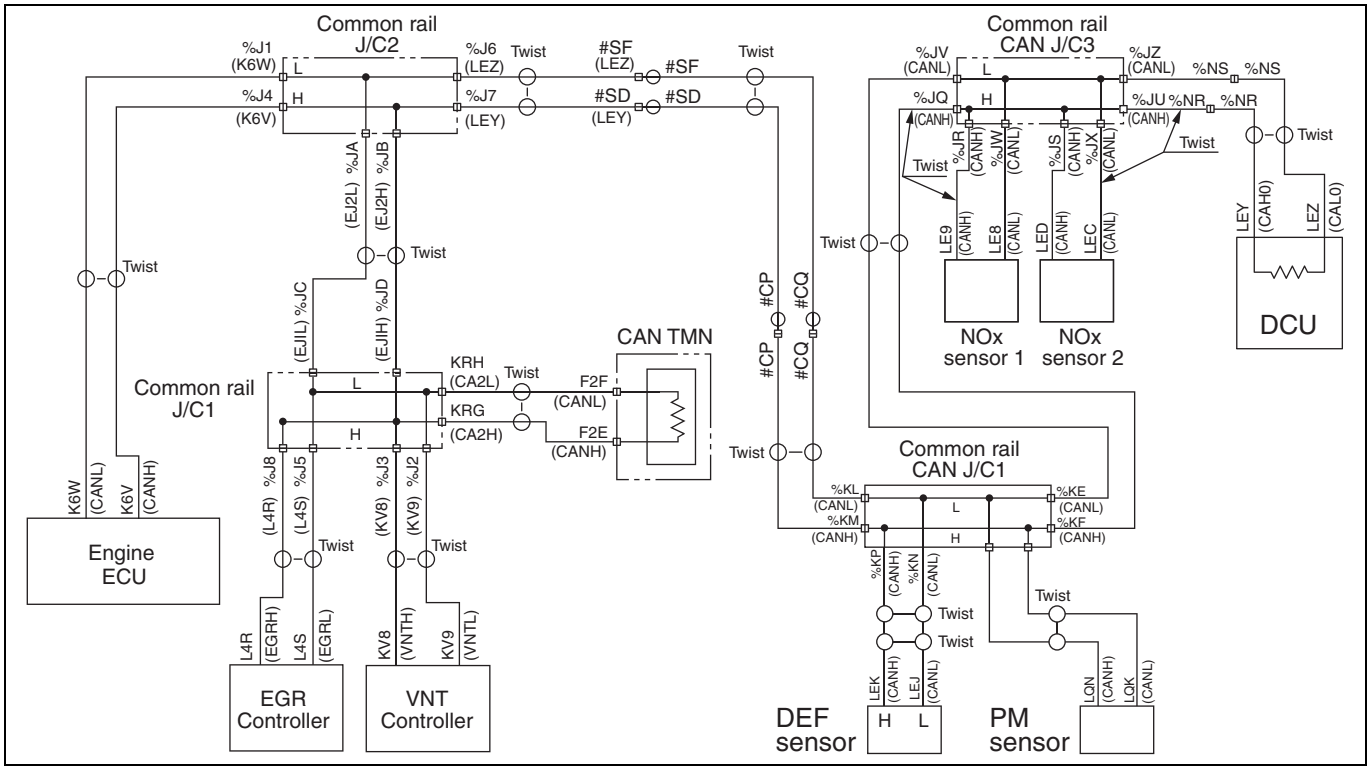


SAPH16F010301364

**1. Technical description**

- The PM sensor is located downstream of the DPR filter, and monitos the PM volume.

**<Description of malfunction>**

- The resistance between the sensor terminals is incorrect.

**2. DTC set condition**

(1) DTC detection condition

- PM sensor is active.
- Battery power supply voltage is in the range of 10 V to 16 V.
- Starter switch remains ON (does not active for starter) for more than 5 seconds.

(2) Judgment criteria

- An abnormality is detected by diagnosing errors from the PM sensor.

**3. Reset condition**

- After normal operation is restored and the starter switch is turned LOCK.

**4. Indication, warning or system control regulation when the DTC is set.**

- MIL: ON

**5. Symptoms on the vehicle when the DTC is set**

**<Symptoms on the vehicle due to backup control (fail safe function)>**

- Overlooking of the DPF damage

**<Symptoms on the vehicle due to malfunction>**

- –

**6. Pre-inspection work**

- Check that the battery voltage is in the normal range.

**7. After-inspection work**

- Clear all past DTCs.
- Check that no DTC is stored after test drive.

**8. Estimated failure factors**

- Failure of the PM sensor
- Abnormality in the filter

## INSPECTION PROCEDURE: P24AF (2 digit diagnosis code 23)

| 1 | Check the DTC detected (Engine ECU) [HINO DX II ] |
|---|---|

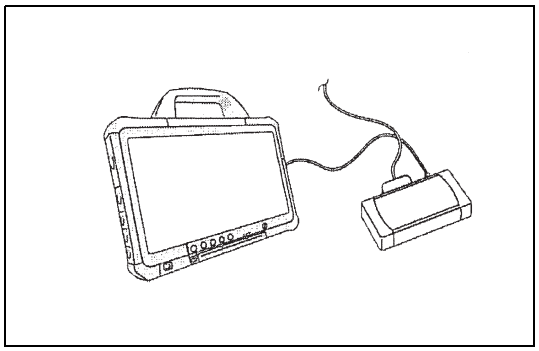

SAPH16F010301365

1. Set the starter switch to the "LOCK" position.
2. Connect the vehicle to HINO DX II .
3. Set the starter switch to the "ON" position.
4. Select [Engine] and check if any DTC other than P24AF has been detected.

**Has a DTC other than P24AF been detected?**

**YES**

**Go to the diagnostic procedure of a related DTC.**

**NO**

**Go to step 2.**

| 2 | Check the PM sensor harness |
|---|---|

1. Check the harness between the controller part and the head part of the PM sensor for damage or other abnormalities.

**Was any failure found?**

**YES**

**Replace the PM sensor.**
**Perform "After-inspection work" of INFORMATION section.**

**NO**

**Go to step 3.**

| 3 | Inspect the DPR filter |
|---|---|



Damage

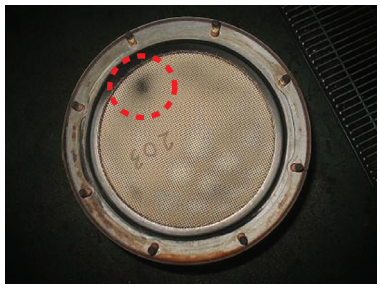

Soot leakage

SAPH16F010301366

1. Remove the DPR filter and check if there is no soot, damages or other abnormalities at its end.

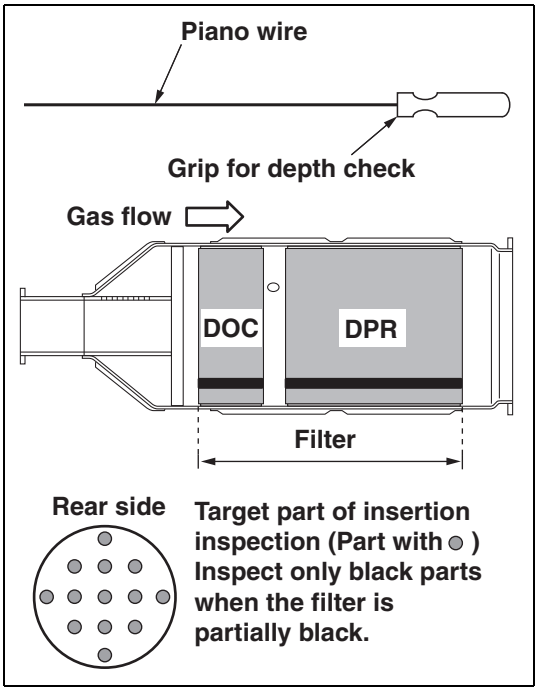


SAPH16F010301367

2. Insert the check probe from the rear surface to inspect the inside.
3. Check probe inserting depth.

| Standard values |
|---|
| 175 - 185 mm {6.890 - 7.283 in.} |

| Was any failure found? |
|---|

**YES**

**Replace the DPR filter and the PM sensor.**
**After replace, perform DPR manual regeneration.**
**Perform "After-inspection work" of INFORMATION section.**

**NO**

**Replace the PM sensor.**
**Perform "After-inspection work" of INFORMATION section.**

# DTC: P24B0

EN01H16F01030F03001190

## P24B0: Failure of PM sensor (short) (2 digit diagnosis code 19, 20, 21)

INFORMATION

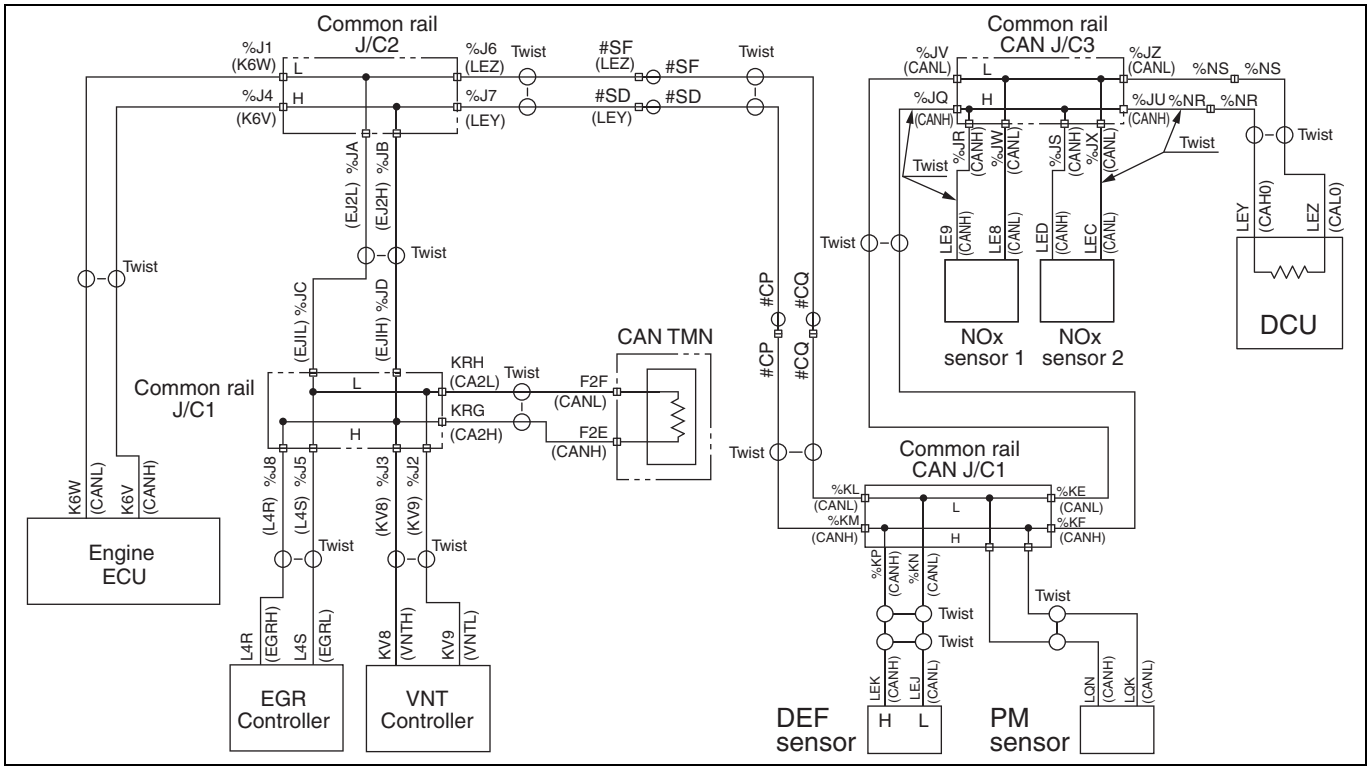


**1. Technical description**

- Failure of short-circuit for the PM sensor is detected from the self-diagnosis function of the PM sensor.

**<Description of malfunction>**

- Failure of the PM sensor is detected.

**2. DTC set condition**

(1) DTC detection condition

- PM sensor is active.
- Battery power supply voltage is in the range of 10 V to 16 V.
- Starter switch remains ON (does not active for starter) for more than 5 seconds.

(2) Judgment criteria

- Abnormal is detected by the error diagnosis from PM sensor.

**3. Reset condition**

- After normal operation is restored and the starter switch is turned LOCK.

**4. Indication, warning or system control regulation when the DTC is set.**

- MIL: ON

**5. Symptoms on the vehicle when the DTC is set**

**<Symptoms on the vehicle due to backup control (fail safe function)>**

- Overlooking of the DPF damage

**<Symptoms on the vehicle due to malfunction>**

- –

**6. Pre-inspection work**

- Check that the battery voltage is in the normal range.

**7. After-inspection work**

- Clear all past DTCs.
- Check that no DTC is stored after test drive.

**8. Estimated failure factors**

- Failure of the PM sensor

## INSPECTION PROCEDURE: P24B0 (2 digit diagnosis code 19, 20)

| 1 | Check the DTC detected (Engine ECU) [HINO DX II ] |
|---|---|

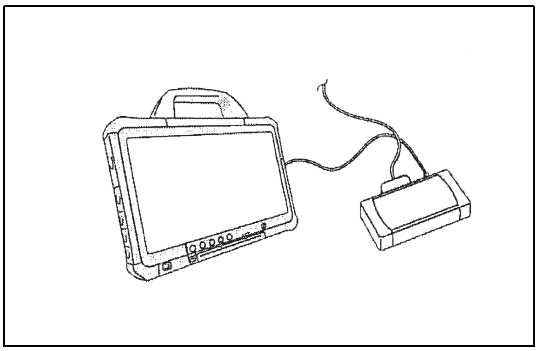

SAPH16F010301369

1. Set the starter switch to the "LOCK" position.
2. Connect the vehicle to HINO DX II .
3. Set the starter switch to the "ON" position.
4. Select [Engine] and check if P24B0 has been detected.

**Has DTC P24B0 been detected?**

**YES**

**GO to step 2.**

**NO**

**Clear all past DTCs, and then procedure completed.**
**Perform "After-inspection work" of INFORMATION section.**

| 2 | Check the PM sensor harness |
|---|---|

1. Check the harness on the controller part or the head part of the PM sensor as if there is the damages of other abnormalities.

**Was any failure found?**

**YES**

**Because of the damages on the harness, replace the PM sensor.**
**Perform "After-inspection work" of INFORMATION section.**

**NO**

**Because of the failure of the PM sensor, replace the PM sensor.**
**Perform "After-inspection work" of INFORMATION section.**

## INSPECTION PROCEDURE: P24B0 (2 digit diagnosis code 21)

| 1 | Check the DTC detected (Engine ECU) [HINO DX ll ] |
|---|---|

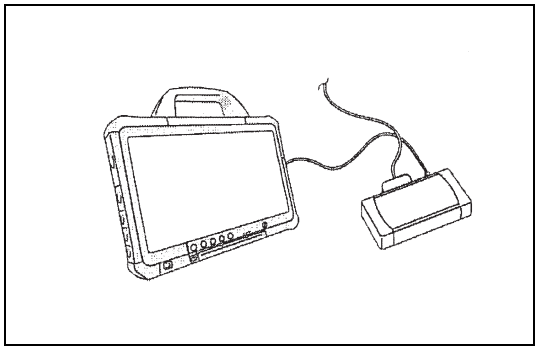

SAPH16F010301370

1. Set the starter switch to the "LOCK" position.
2. Connect the vehicle to HINO DX II .
3. Set the starter switch to the "ON" position.
4. Select [Engine] and check if any DTC other than P24B0 has been detected.

**Has a DTC other than P24B0 been detected?**

**YES**

**Go to the diagnostic procedure of a related DTC.**

**NO**

**Go to step 2.**

| 2 | Check the PM sensor harness |
|---|---|

1. Check the harness on the controller part or the head part of the PM sensor as if there is the damages of other abnormalities.

**Was any failure found?**

**YES**

**Replace the PM sensor.**
**Perform "After-inspection work" of INFORMATION section.**

**NO**

**Go to step 3.**

| 3 | Inspect the DPR filter |
|---|---|

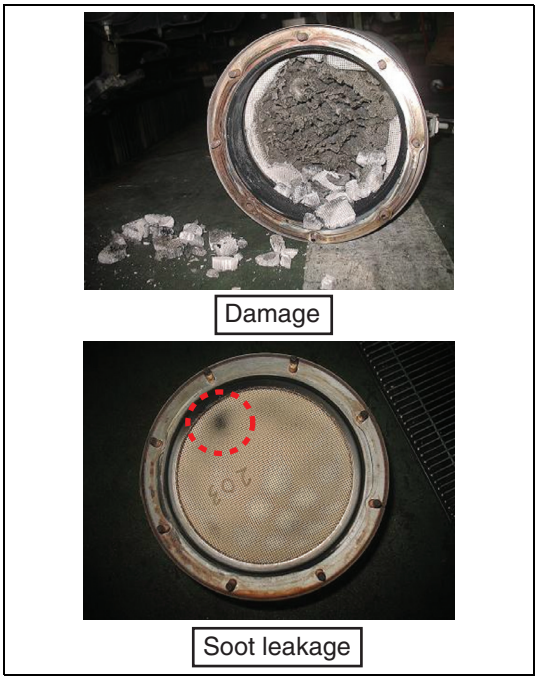


SAPH16F010301371

1. Remove the DPR filter and check if there is no soot, damages or other abnormalities at its end.

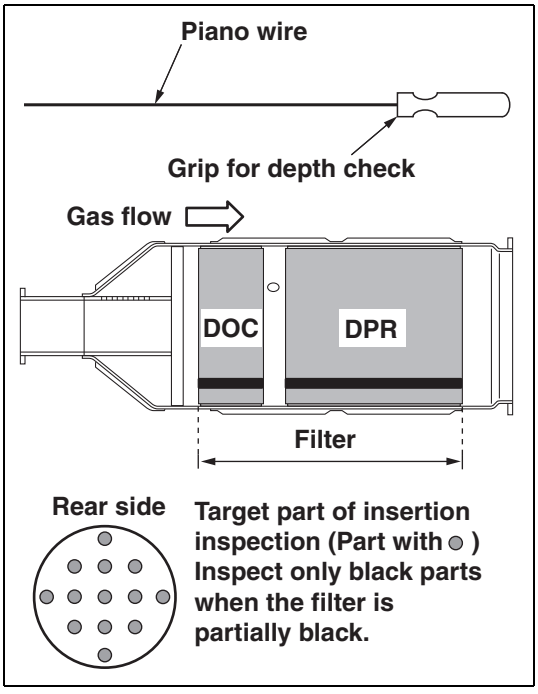


SAPH16F010301372

2. Insert the check probe from the rear surface to inspect the inside.
3. Check probe inserting depth.

| Standard values |
|---|
| 175 - 185 mm {6.890 - 7.283 in.} |

**Was any failure found?**

**YES**

**Replace the DPR filter and the PM sensor. Perform "After-inspection work" of INFORMATION section.**

**NO**

**Replace the PM sensor. Perform "After-inspection work" of INFORMATION section.**

# DTC: P24B1

EN01H16F01030F03001191

## P24B1: Failure of PM sensor (open) (2 digit diagnosis code 18)

INFORMATION

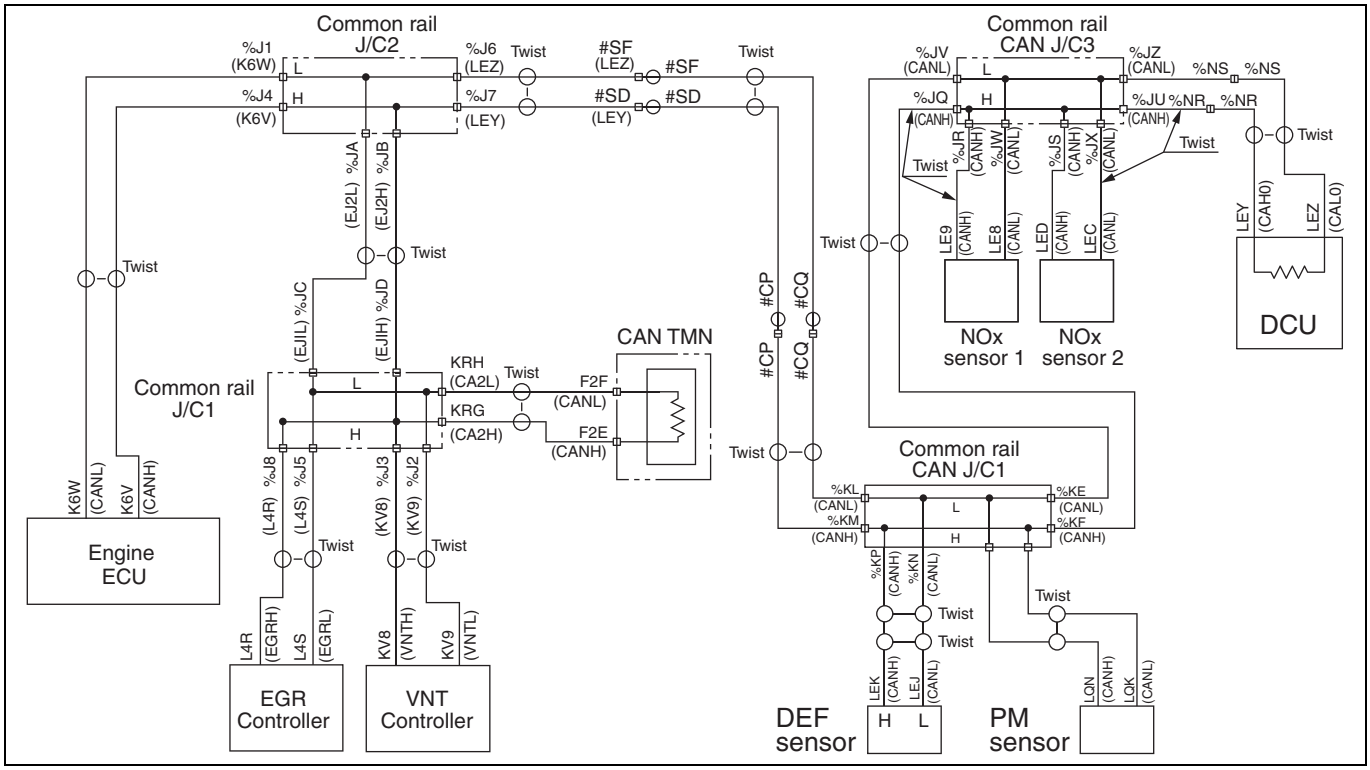


SAPH16F010301373

**1. Technical description**

- Failure of disconnection for the PM sensor is detected from the self-diagnosis function of the PM sensor.

**<Description of malfunction>**

- Failure of the PM sensor is detected.

**2. DTC set condition**

(1) DTC detection condition

- PM sensor is active.
- Battery power supply voltage is in the range of 10 V to 16 V.
- Starter switch remains ON (does not active for starter) for more than 5 seconds.

(2) Judgment criteria

- Abnormal is detected by the error diagnosis from PM sensor.

**3. Reset condition**

- After normal operation is restored and the starter switch is turned LOCK.

**4. Indication, warning or system control regulation when the DTC is set.**

- MIL: ON

**5. Symptoms on the vehicle when the DTC is set**

**<Symptoms on the vehicle due to backup control (fail safe function)>**

- Overlooking of the DPF damage

**<Symptoms on the vehicle due to malfunction>**

- –

**6. Pre-inspection work**

- Check that the battery voltage is in the normal range.

**7. After-inspection work**

- Clear all past DTCs.
- Check that no DTC is stored after test drive.

**8. Estimated failure factors**

- Failure of the PM sensor

## INSPECTION PROCEDURE: P24B1 (2 digit diagnosis code 18)

| 1 | Check the DTC detected (Engine ECU) [HINO DX II ] |
|---|---|

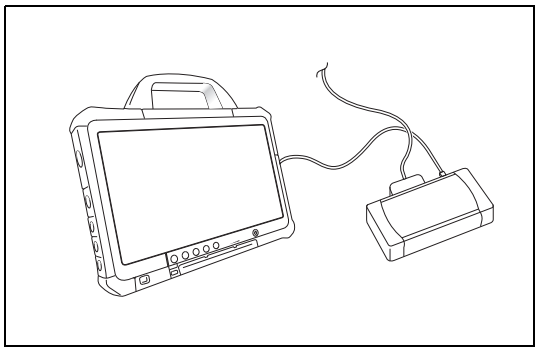

SAPH16F010301374

1. Set the starter switch to the "LOCK" position.
2. Connect the vehicle to HINO DX II .
3. Set the starter switch to the "ON" position.
4. Select [Engine] and check if P24B1 has been detected.

**Has DTC P24B1 been detected?**

**YES**

**Go to step 2.**

**NO**

**Clear all past DTCs, and then procedure completed.**
**Perform "After-inspection work" of INFORMATION section.**

| 2 | Check the PM sensor harness |
|---|---|

1. Check the harness on the controller part or the head part of the PM sensor as if there is the damages or other abnormalities.

**Was any failure found?**

**YES**

**Because of the damages on the harness, replace the PM sensor.**
**Perform "After-inspection work" of INFORMATION section.**

**NO**

**Because of the failure of the PM sensor, replace the PM sensor.**
**Perform "After-inspection work" of INFORMATION section.**

# DTC: P24B4

EN01H16F01030F03001192

## P24B4:Abnormal of PM sensor heater (2 digit diagnosis code 10, 11, 15, 17)

INFORMATION

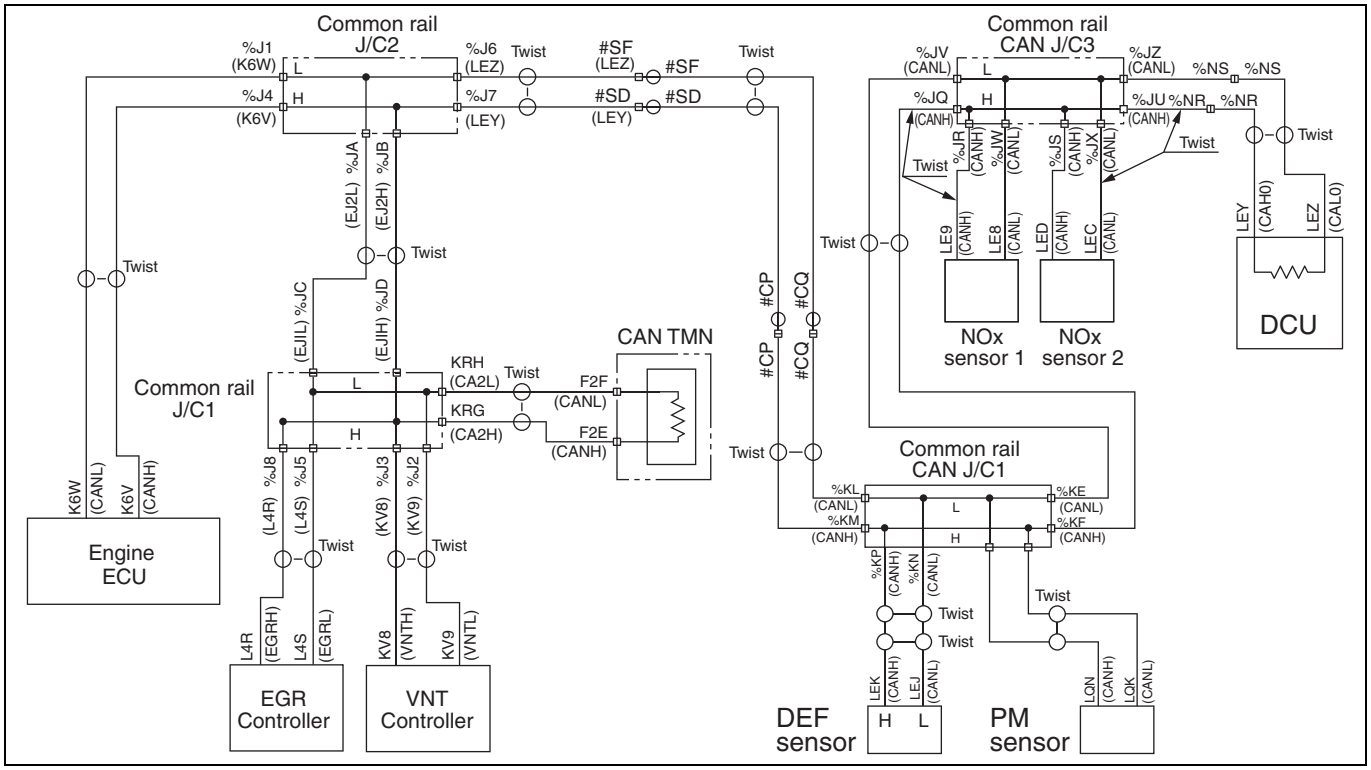


SAPH16F010301375

**1. Technical description**

- Failure of the PM sensor heater is detected from the self-diagnosis function of the PM sensor.

**<Description of malfunction>**

- Failure of the PM sensor is detected.

**2. DTC set condition**

(1) DTC detection condition

- PM sensor is active.
- Battery power supply voltage is in the range of 10 V to 16 V.
- Starter switch remains ON (does not active for starter) for more than 5 seconds.

(2) Judgment criteria

- Abnormal is detected by the error diagnosis from PM sensor.

**3. Reset condition**

- After normal operation is restored and the starter switch is turned LOCK.

**4. Indication, warning or system control regulation when the DTC is set.**

- MIL: ON

**5. Symptoms on the vehicle when the DTC is set**

**<Symptoms on the vehicle due to backup control (fail safe function)>**

- Overlooking of the DPF damage

**<Symptoms on the vehicle due to malfunction>**

- –

**6. Pre-inspection work**

- Check that the battery voltage is in the normal range.

**7. After-inspection work**

- Clear all past DTCs.
- Check that no DTC is stored after test drive.

**8. Estimated failure factors**

- Failure of the PM sensor

## INSPECTION PROCEDURE: P24B4 (2 digit diagnosis code 10)

| 1 | Check the DTC detected (Engine ECU) [HINO DX II ] |
|---|---|

1. Set the starter switch to the "LOCK" position.
2. Connect the vehicle to HINO DX II .
3. Set the starter switch to the "ON" position.
4. Select [Engine] and check if any DTC other than P24B4 has been detected.

**Has DTC other than P24B4 been detected?**

**YES**

**Go to step 2.**

**NO**

**Clear all past DTSs, and then prosedure completed.**
**Perform "After-inspection work" of INFORMATION section.**

| 2 | Check the PM sensor harness |
|---|---|

1. Check the harness on the controller part or the head part of the PM sensor as if there is the damages of other abnormalities.

**Was any failure found?**

**YES**

**Because of the damages on the harness, replace the PM sensor.**
**Perform "After-inspection work" of INFORMATION section.**

**NO**

**Because of the failure of the PM sensor, replace the PM sensor.**
**Perform "After-inspection work" of INFORMATION section.**

## INSPECTION PROCEDURE: P24B4 (2 digit diagnosis code 11)

| 1 | Check the DTC detected (Engine ECU) [HINO DX II ] |
|---|---|

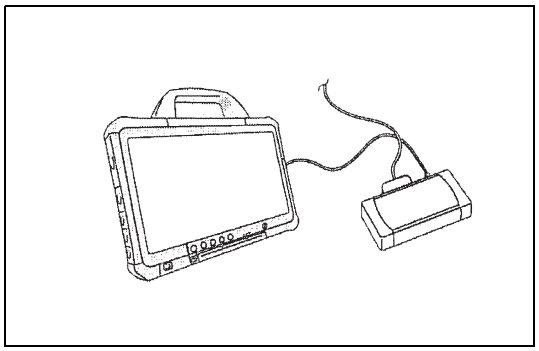

SAPH16F010301376

1. Set the starter switch to the "LOCK" position.
2. Connect the vehicle to HINO DX II .
3. Set the starter switch to the "ON" position.
4. Select [Engine] and check if any DTC other than P24B4 has been detected.

**Has a DTC other than P24B4 been detected?**

**YES**

**Go to the diagnostic procedure of a related DTC.**

**NO**

**Go to step 2.**

| 2 | Inspect the DPR filter |
|---|---|



Damage

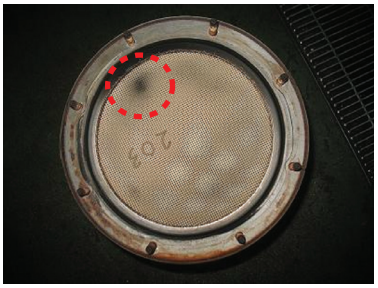

Soot leakage

SAPH16F010301377

1. Remove the DPR filter and check if there is no soot, damages or other abnormalities at its end.

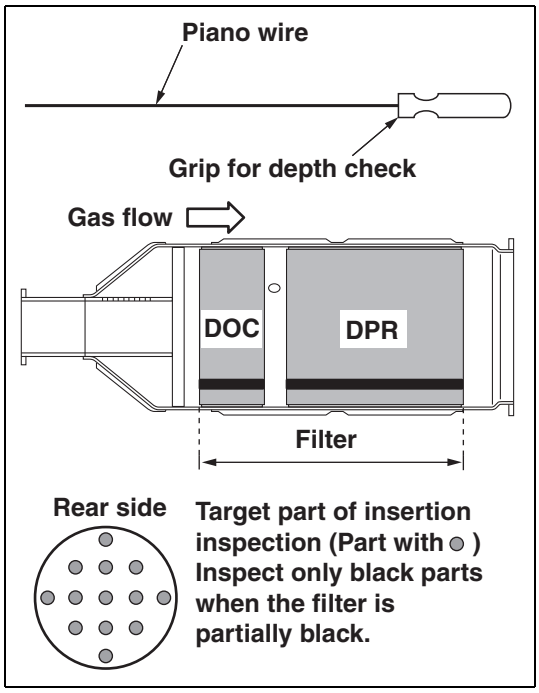


SAPH16F010301378

2. Insert the check probe from the rear surface to inspect the inside.

3. Check probe inserting depth.

| Standard values |
|---|
| 175 - 185 mm {6.890 - 7.283 in.} |

**Was any failure found?**

**YES**

**Replace the DPR filter and the PM sensor.**
**Perform "After-inspection work" of INFORMATION section.**

**NO**

**Replace the PM sensor.**
**Clear all past DTSs, and then procedure completed.**
**Perform "After-inspection work" of INFORMATION section.**

## INSPECTION PROCEDURE: P24B4 (2 digit diagnosis code 15)

| 1 | Check the DTC detected (Engine ECU) |
|---|---|

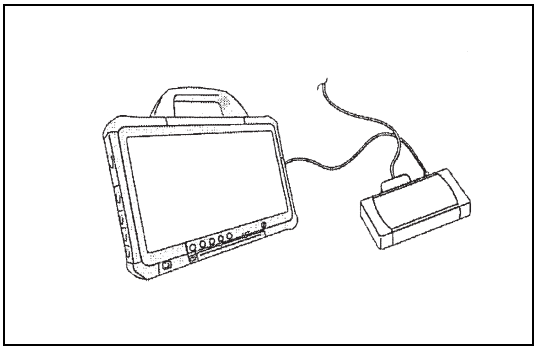

SAPH16F010301379

1. Set the starter switch to the "LOCK" position.
2. Connect the vehicle to HINO DX II .
3. Set the starter switch to the "ON" position.
4. Select [Engine] and check if any DTC other than P24B4 has been detected.

**Has a DTC other than P24B4 been detected?**

**YES**

**Go to the diagnostic procedure of a related DTC.**

**NO**

**Go to step 2.**

| 2 | Inspect the PM sensor power supply |
|---|---|

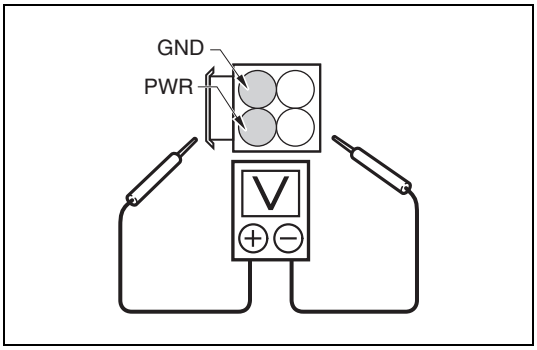


SAPH16F010301380

1. Set the starter switch to the “LOCK” position.
2. Disconnect the connector of the PM sensor.
3. Set the starter switch to the "ON" position.
4. Use the electrical tester to measure the voltage between the terminals of the PM sensor vehicle-side connector.

| Measurement conditions | Tester connections | Standard values |
|---|---|---|
| Starter switch: ON | PM sensor vehicle-side connector 1st (GND) terminal – 3rd (PWR) terminal | 10 – 16 V |

**Do the measurements meet the standard value?**

**YES**

**Replace the PM sensor.**
**Perform "After-inspection work" of INFORMATION section.**

**NO**

**Check and repair or replace the wire harness, and then go to step 3.**

| 3 | Check the battery |
|---|---|

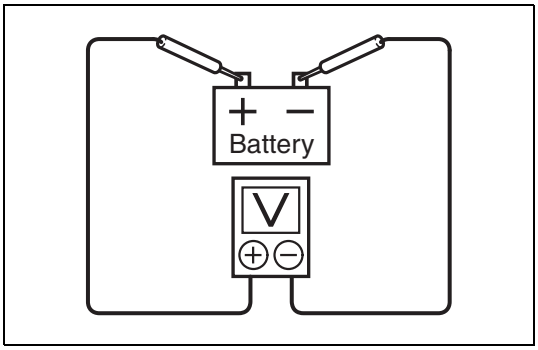


SAPH16F010301381

1. Set the starter switch to the “LOCK” position.
2. Measure the battery voltage using the electrical tester.

| Measurement conditions | Tester connections | Standard values |
|---|---|---|
| Starter switch: LOCK | Battery terminal positive – negative | 12 V |

**Do the measurements meet the standard value?**

**YES**

**Go to step 4.**

**NO**

**Replace the battery, and then go to step 5.**

| 4 | Check the vehicle wire harness |
|---|---|

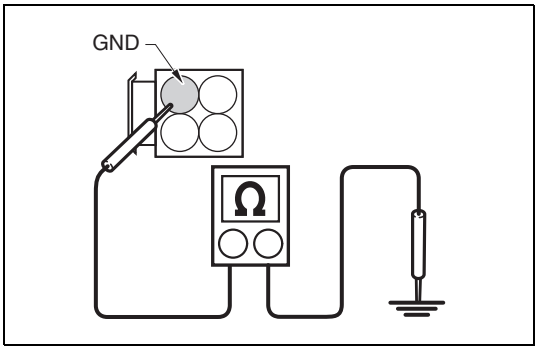


SAPH16F010301382

1. Set the starter switch to the "LOCK" position.
2. Disconnect the PM sensor connector.
3. Use the electrical tester to measure the resistance between the GND terminal of the PM sensor vehicle-side connector and the vehicle GND.

| Measuremen tconditions | Tester connections | Standard values |
|---|---|---|
| Starter switch: LOCK | PM sensor vehicle-side connector 1st (GND) terminal – Vehicle GND | Less than 1 Ω |

**Do the measurements meet the standard value?**

**YES**

**PM sensor GND circuit of the vehicle-side harness is failure.**
**Repair or replace the harness, clear all past DTCs, and then procedure completed.**
**Perform "After-inspection work" of INFORMATION section.**

**NO**

**PM sensor power supply circuit of the vehicle-side harness is failure.**
**Repair or replace the harness, clear all past DTCs, and then procedure completed.**
**Perform "After-inspection work" of INFORMATION section.**

| 5 | Check the PM sensor [HINO DX ll ] |
|---|---|

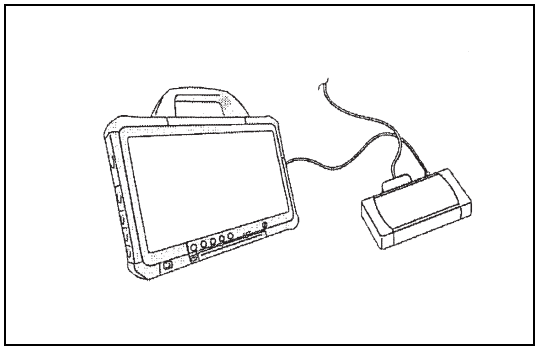

SAPH16F010301383

1. Set the starter switch to the "ON" position.
2. elect [Engine] and check if P24AE has been detected.

**Has DTC P24AE been detected?**

**YES**

**Replace the PM sensor.**
**Perform "After-inspection work" of INFORMATION section.**

**NO**

**Clear all past DTCs, and then procedure completed.**
**Perform "After-inspection work" of INFORMATION section.**

## INSPECTION PROCEDURE: P24B4 (2 digit diagnosis code 17)

| 1 | Check the DTC detected (Engine ECU) [HINO DX II ] |
|---|---|

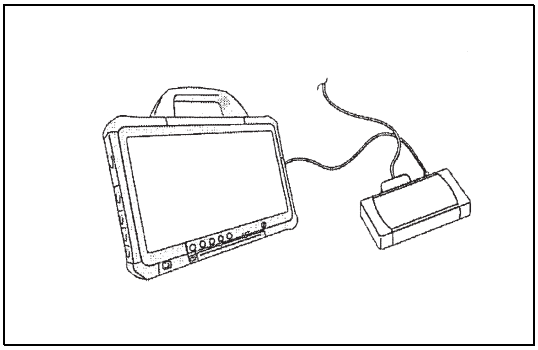

SAPH16F010301384

1. Set the starter switch to the "LOCK" position.
2. Connect the vehicle to HINO DX II .
3. Set the starter switch to the "ON" position.
4. Select [Engine] and check if any DTC other than P24B4 has been detected.

**Has a DTC other than P24B4 been detected?**

**YES**

**Go to the diagnostic procedure of a related DTC**

**NO**

**Go to step 2.**

| 2 | Inspect the DPR filter |
|---|---|



Damage

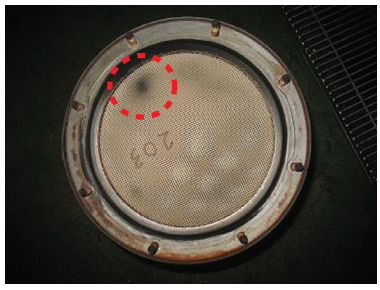

Soot leakage

SAPH16F010301385

1. Remove the DPR filter and check if there is no soot, damages or other abnormalities at its end.

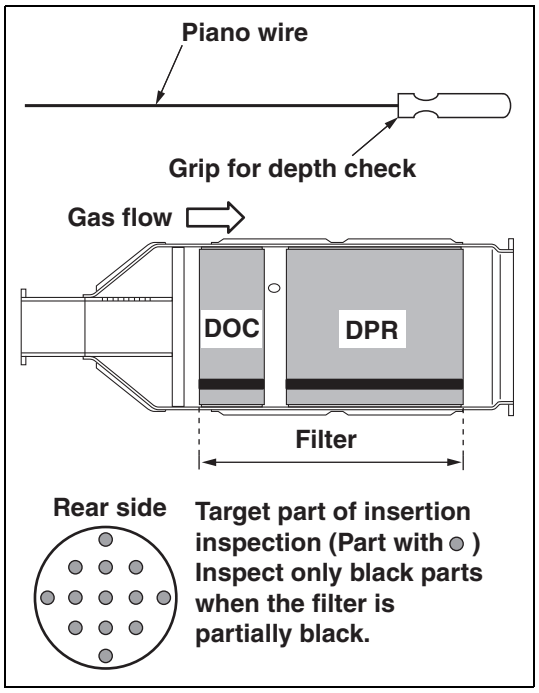


SAPH16F010301386

2. Insert the check probe from the rear surface to inspect the inside.

3. Check probe inserting depth.

| Standard values |
|---|
| 175 - 185 mm {6.890 - 7.283 in.} |

**Was any failure found?**

**YES**

**Replace the DPR filter and the PM sensor.**
**Perform "After-inspection work" of INFORMATION section.**

**NO**

**Replace the PM sensor.**
**Clear all past DTCs, and then procedure completed.**
**Perform "After-inspection work" of INFORMATION section.**

# DTC: P24B6

EN01H16F01030F03001193

## P24B6: Abnormal of power supply voltage for PM sensor (Low) (2 digit diagnosis code 02)

INFORMATION

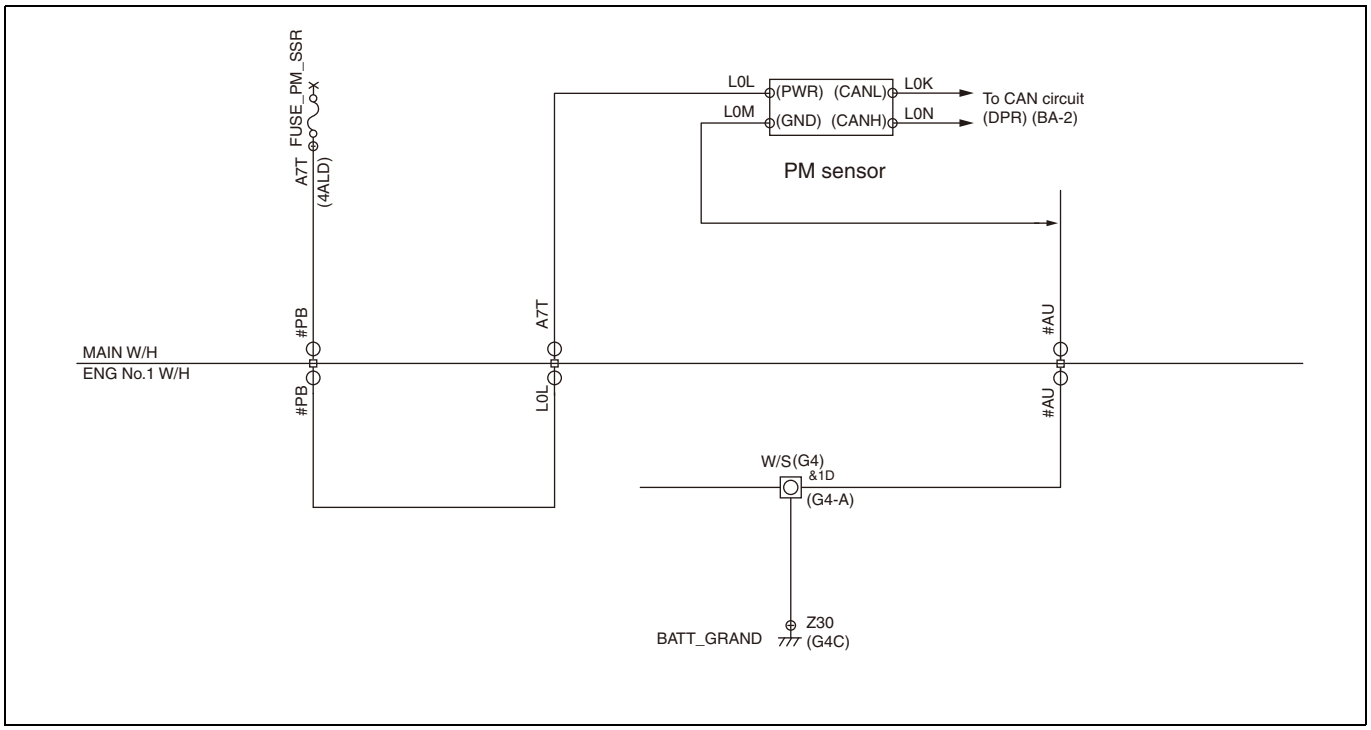


SAPH16F010301387

**1. Technical description**

- Abnormal of power supply voltage for the PM sensor is detected from the self-diagnosis function.

**<Description of malfunction>**

- Abnormal of the PM sensor is detected.

**2. DTC set condition**

(1) DTC detection condition

- PM sensor is active.
- Battery power supply voltage is in the range of 10 V to 16 V.
- Starter switch remains ON (does not active for starter) for more than 5 seconds.

(2) Judgment criteria

- When the power supply voltage for the PM sensor is more then 16 V, abnormal is detected by the buss off condition from PM sensor.

**3. Reset condition**

- After normal operation is restored.

**4. Indication, warning or system control regulation when the DTC is set.**

- MIL: ON

**5. Symptoms on the vehicle when the DTC is set**

**<Symptoms on the vehicle due to backup control (fail safe function)>**

- Overlooking of the DPF damage

**<Symptoms on the vehicle due to malfunction>**

- –

**6. Pre-inspection work**

- Check that the battery voltage is in the normal range.

**7. After-inspection work**

- Clear all past DTCs.
- Check that no DTC is stored after test drive.

**8. Estimated failure factors**

- Failure of the PM sensor controller
- Harness failure (disconnection or short-circuit)
- Abnormal of the battery

## INSPECTION PROCEDURE: P24B6 (2 digit diagnosis code 02)

| 1 | Check the DTC detected (Engine ECU) |
|---|---|

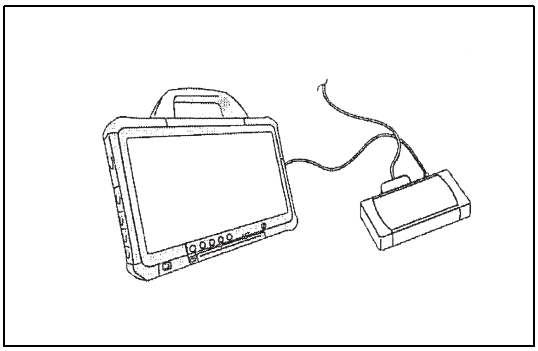

SAPH16F010301388

1. Set the starter switch to the "LOCK" position.
2. Connect the vehicle to HINO DX II .
3. Set the starter switch to the "ON" position.
4. Select [Engine] and check if any DTC other than P24B6 has been detected.

**Has a DTC other than P24B6 been detected?**

**YES**

**Go to the diagnostic procedure of a related DTC.**

**NO**

**Go to step 2.**

| 2 | Inspect the PM sensor power supply |
|---|---|

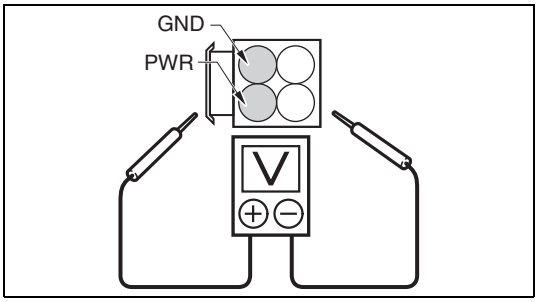


SAPH16F010301389

1. Set the starter switch to the “LOCK” position.
2. Disconnect the connector of the PM sensor.
3. Set the starter switch to the "ON" position.
4. Use the electrical tester to measure the voltage between the terminals of the PM sensor vehicle-side connector.

| Measurement conditions | Tester connections | Standard values |
|---|---|---|
| Starter switch: ON | PM sensor vehicle-side connector 1st (GND) terminal – 3rd (PWR) terminal | 10 – 16 V |

**Do the measurements meet the standard value?**

**YES**

**Go to step 5.**

**NO**

**Check and repair or replace the wire harness, and then go to step 3.**

## 3 Check the battery

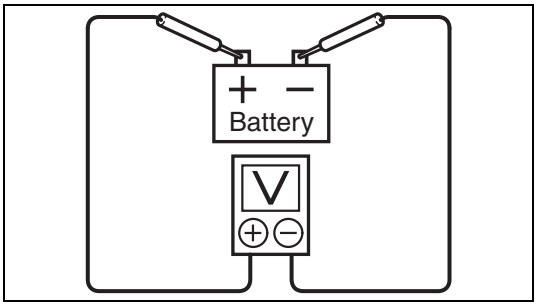


SAPH16F010301390

1. Set the starter switch to the “LOCK” position.
2. Measure the battery voltage using the electrical tester.

| Measurement conditions | Tester connections | Standard values |
|---|---|---|
| Starter switch: LOCK | Battery terminal positive – negative | 12 V |

**Do the measurements meet the standard value?**

**YES**

**Go to step 4.**

**NO**

**Replace the battery, and then go to step 5.**

## 4 Check the vehicle wire harness

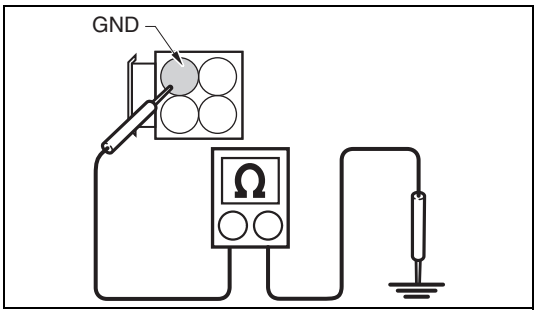


SAPH16F010301391

1. Set the starter switch to the "LOCK" position.
2. Disconnect the PM sensor connector.
3. Use the electrical tester to measure the resistance between the GND terminal of the PM sensor vehicle-side connector and the vehicle GND.

| Measurement conditions | Tester connections | Standard values |
|---|---|---|
| Starter switch: LOCK | PM sensor vehicle-side connector 1st (GND) terminal – Vehicle GND | Less than 1 Ω |

**Do the measurements meet the standard value?**

**YES**

**PM sensor GND circuit of the vehicle-side harness is failure.**
**Repair or replace the harness, clear all past DTCs, and then procedure completed.**
**Perform "After-inspection work" of INFORMATION section.**

**NO**

**PM sensor power supply circuit of the vehicle-side harness is failure.**
**Repair or replace the harness, clear all past DTCs, and then procedure completed.**
**Perform "After-inspection work" of INFORMATION section.**

| 5 | Check the PM sensor [HINO DX ll ] |
|---|---|

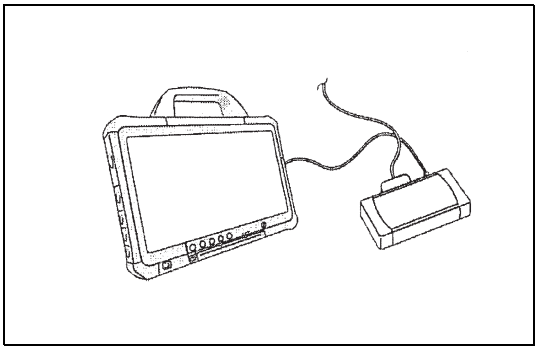

SAPH16F010301392

1. Set the starter switch to the "ON" position.
2. Select [Engine] and check if P24B6 has been detected.

**Has DTC P24B6 been detected?**

**YES**

**Replace the PM sensor.**
**Perform "After-inspection work" of INFORMATION section.**

**NO**

**Clear all past DTCs, and then procedure completed.**
**Perform "After-inspection work" of INFORMATION section.**

# DTC: P24B7

EN01H16F01030F03001194

## P24B7: Performance - PM sensor heater resistance (2 digit diagnosis code 08)

INFORMATION

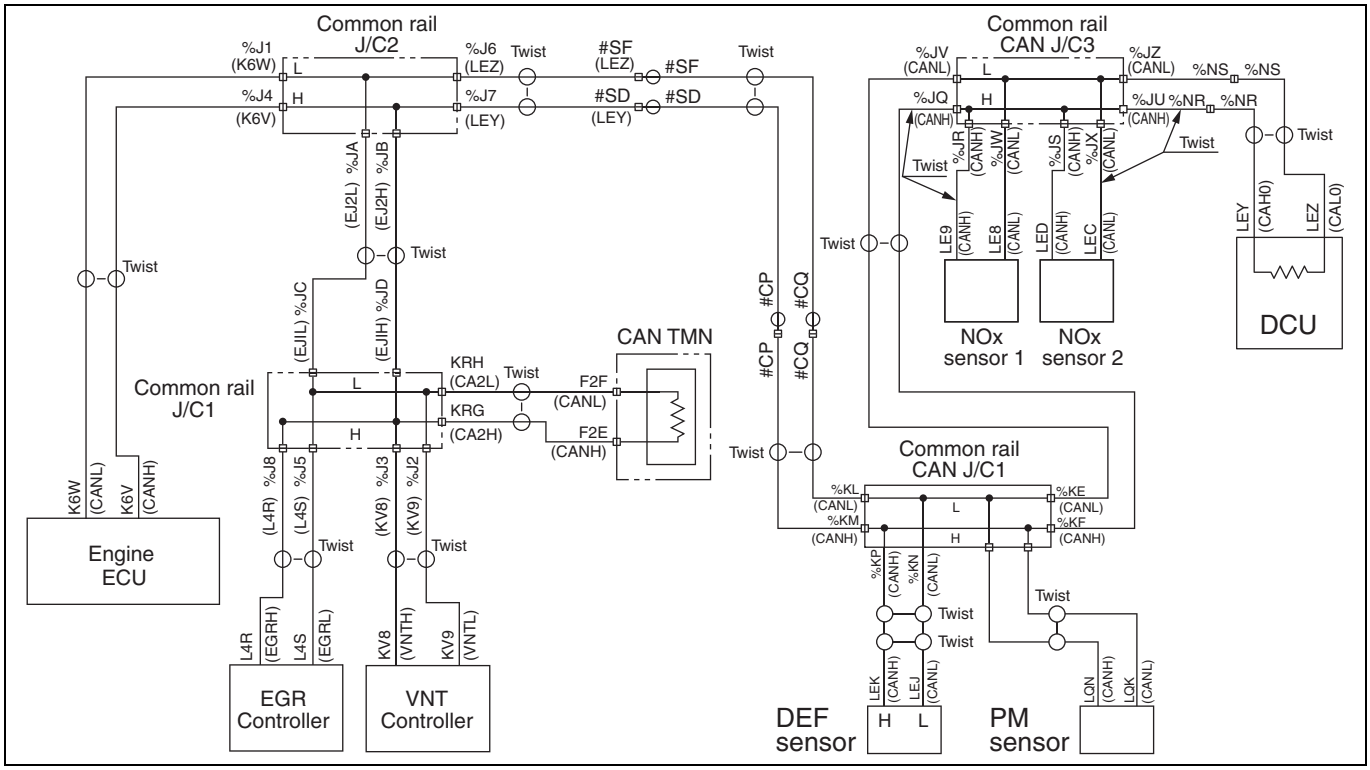


SAPH16F010301393

**1. Technical description**

- The PM sensor is installed downstream of DPR filter to monitor the PM volume from the DPR filter.

**<Description of malfunction>**

- The resistance behavior of the PM sensor heater is not proper.
- This diagnosis is deduced if the PM sensor head is modified intentionally (such as an external resister being installed on the heater circuit).

**2. DTC set condition**

(1) DTC detection condition

- PM sensor is active.
- Battery power supply voltage is in the range of 10 V to 16 V.
- Starter switch remains ON (does not active for starter) for more than 5 seconds.

(2) Judgment criteria

- Abnormal is detected by the error diagnosis from PM sensor.

**3. Reset condition**

- After normal operation is restored and the starter switch is turned LOCK.

**4. Indication, warning or system control regulation when the DTC is set.**

- MIL: ON

**5. Symptoms on the vehicle when the DTC is set**

**<Symptoms on the vehicle due to backup control (fail safe function)>**

- Overlooking of the DPF damage

**<Symptoms on the vehicle due to malfunction>**

- –

**6. Pre-inspection work**

- Check that the battery voltage is in the normal range.

**7. After-inspection work**

- Clear all past DTCs.
- Check that no DTC is stored after test drive.

**8. Estimated failure factors**

- Failure of the PM sensor
- Illegal modification of the PM sensor
- Abnormality in the battery

## INSPECTION PROCEDURE: P24B7 (2 digit diagnosis code 08)

| 1 | Check the DTC detected (Engine ECU) [HINO DX II ] |
|---|---|

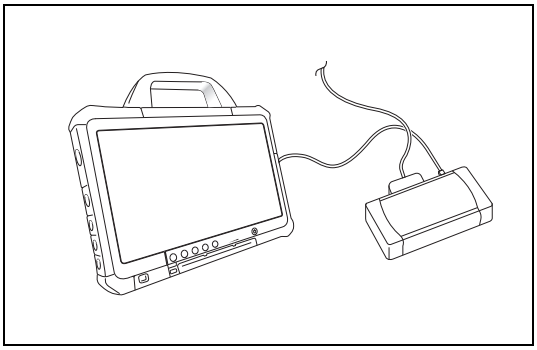

SAPH16F010301394

1. Set the starter switch to the "LOCK" position.
2. Connect the vehicle to HINO DX II .
3. Set the starter switch to the "ON" position.
4. Select [Engine] and check if any DTC other than P24B7 has been detected.

**Has DTC other than P24B7 been detected?**

**YES**

**Go to the diagnostic procedure of a related DTC.**

**NO**

**Go to step 2.**

| 2 | Check the PM sensor |
|---|---|



SAPH16F010301395

1. Remove the PM sensor to check if the head is normal and that it has not been modified intentionally (such as an external resister being installed on the heater circuit).

**Was any failure found?**

**YES**

**The part has been illegally modified.**
**Please ask the customer to restore the original condition.**
**Perform diagnosis again after that.**

**NO**

**Replace the PM sensor. (The PM sensor is probably malfunctioning.)**
**Perform “After-inspection work” of INSPECTION section.**

# DTC: P24C7

EN01H16F01030F03001195

## P24C7: PM sensor temperature circuit range/performance (2 digit diagnosis code 09)

INFORMATION

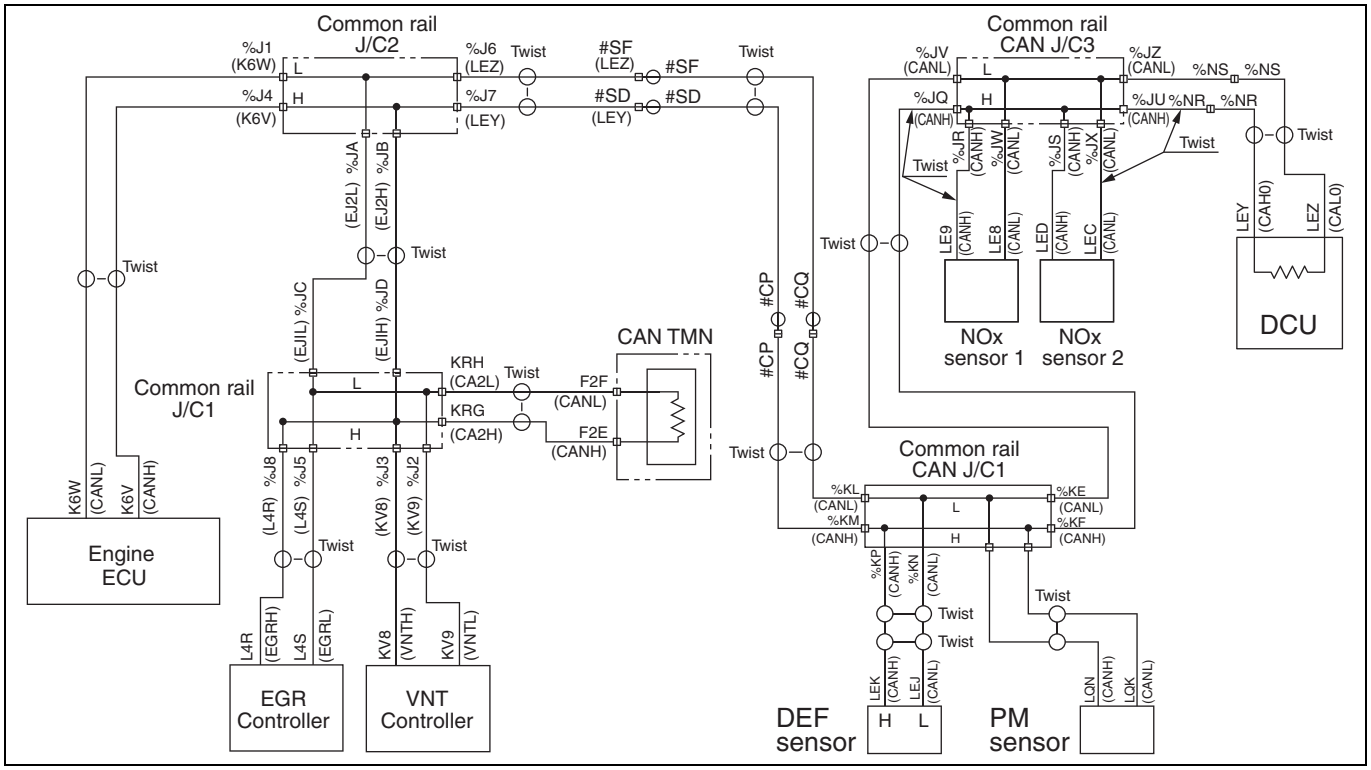


SAPH16F010301396

**1. Technical description**

- The mistake of installing the PM sensor on the exhaust pipe is detected from the self-diagnosis function of the PM sensor.

**<Description of malfunction>**

- Failure of the PM sensor is detected.

**2. DTC set condition**

(1) DTC detection condition

- PM sensor is active.
- Battery power supply voltage is in the range of 10 V to 16 V.
- Starter switch remains ON (does not active for starter) for more than 5 seconds.

(2) Judgment criteria

- Abnormal is detected by the error diagnosis from PM sensor.

**3. Reset condition**

- After normal operation is restored and the starter switch is turned LOCK.

**4. Indication, warning or system control regulation when the DTC is set.**

- MIL: ON

**5. Symptoms on the vehicle when the DTC is set**

**<Symptoms on the vehicle due to backup control (fail safe function)>**

- Overlooking of the DPF damage

**<Symptoms on the vehicle due to malfunction>**

- –

**6. Pre-inspection work**

- Check that the battery voltage is in the normal range.

**7. After-inspection work**

- Clear all past DTCs.
- Check that no DTC is stored after test drive.

**8. Estimated failure factors**

- Failure of the PM sensor
- Illegal modification of the PM sensor.

## INSPECTION PROCEDURE: P24C7 (2 digit diagnosis code 09)

| 1 | Check the DTC detected (Engine ECU) [HINO DX II ] |
|---|---|

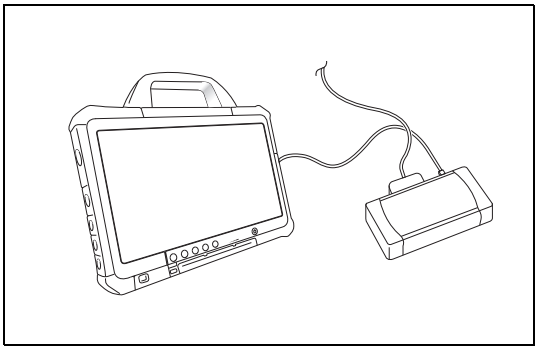

SAPH16F010301397

1. Set the starter switch to the "LOCK" position.
2. Connect the vehicle to HINO DX II .
3. Set the starter switch to the "ON" position.
4. Select [Engine] and check if any other DTC other than P24C7 has been detected.

**Has DTC other than P24C7 been detected?**

**YES**

**Go to the dignostic procedure of a related DTC.**

**NO**

**Go to step 2.**

| 2 | Check the PM sensor |
|---|---|

1. Check if the PM sensor is on the exhaust pipe.

**Was any failure found?**

**YES**

**Replace the PM sensor.**
**Perform "After-inspection work" of INFORMATION section.**

**NO**

**Go to step 3.**

| 3 | Inspect the exhaust gas temperature sensor (SCR inlet) unit |
|---|---|

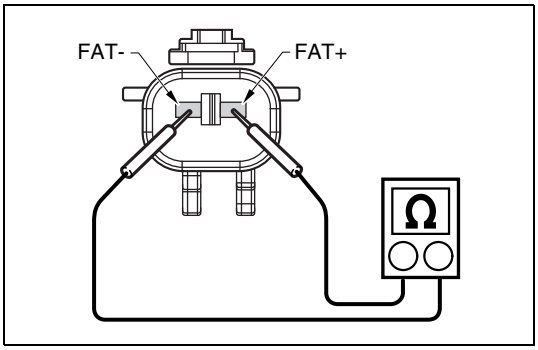


SAPH16F010301398

1. Set the starter switch to the "LOCK" position.
2. Disconnect the exhaust gas temperature sensor (SCR inlet) connector.
3. Use the electrical tester to measure the resistance between the terminals of the exhaust gas temperature sensor (SCR inlet).

| Measurement conditions | Tester connections | Standard values |
|---|---|---|
| Starter switch: LOCK | Exhaust gas temperature sensor (SCR inlet) FAT+ – FAT- | 20 °C {68 °F}: 220 Ω |

**Do the measurements meet the standard value?**

**YES**

**Replace the PM sensor.**
**Perform "After-inspection work" of INFORMATION section.**

**NO**

**Replace the exhaust gas temperature sensor (SCR inlet).**
**Perform "After-inspection work" of INFORMATION section.**

# DTC: P24D1

EN01H16F01030F03001196

## P24D1: PM sensor regeneration incomplete (2 digit diagnosis code 12)

INFORMATION

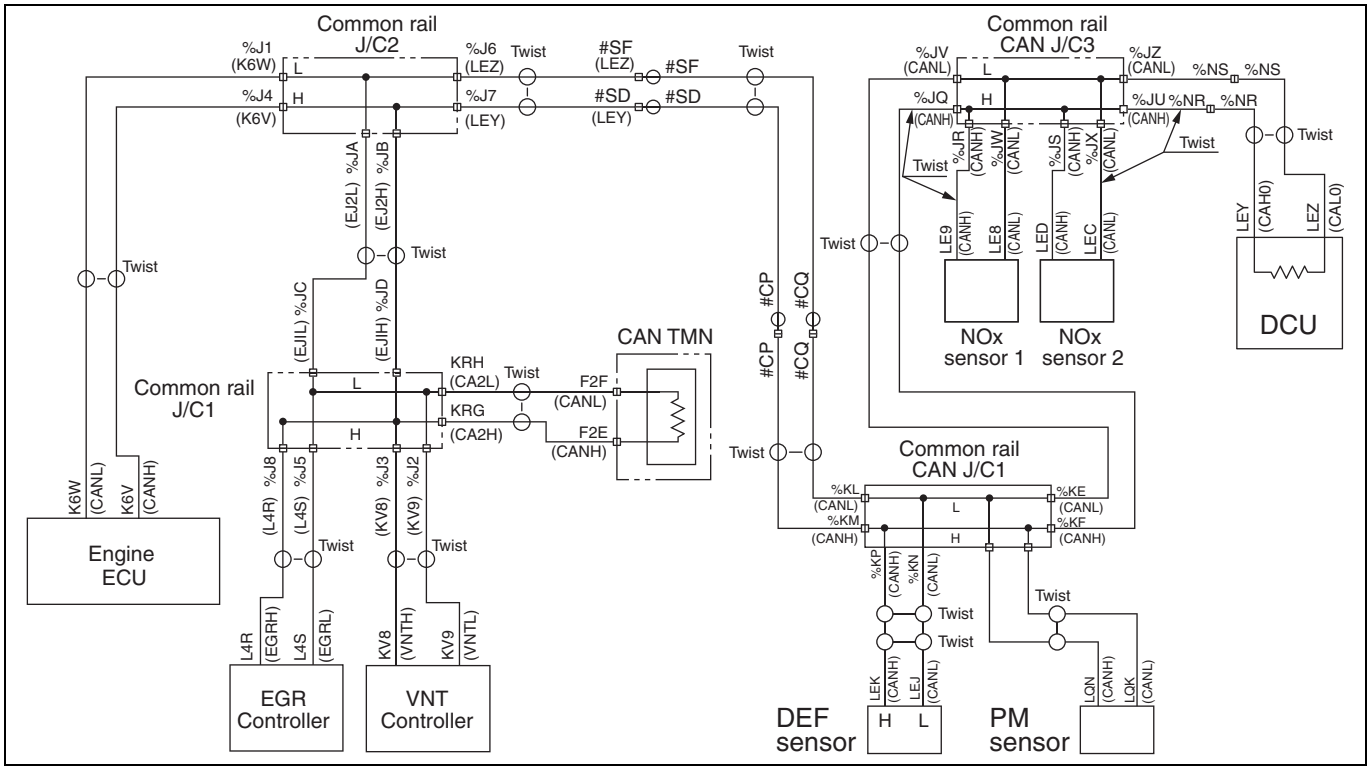


SAPH16F010301399

**1. Technical description**

- PM sensor regeneration trouble is detected from the self-diagnosis function of the PM sensor.

**<Description of malfunction>**

- Failure of the PM sensor is detected.

**2. DTC set condition**

(1) DTC detection condition

- PM sensor is active.
- Battery power supply voltage is in the range of 10 V to 16 V.
- Starter switch remains ON (does not active for starter) for more than 5 seconds.

(2) Judgment criteria

- Abnormal is detected by the error diagnosis from PM sensor.

**3. Reset condition**

- After normal operation is restored and the starter switch is turned LOCK.

**4. Indication, warning or system control regulation when the DTC is set.**

- MIL: ON

**5. Symptoms on the vehicle when the DTC is set**

**<Symptoms on the vehicle due to backup control (fail safe function)>**

- Overlooking of the DPF damage

**<Symptoms on the vehicle due to malfunction>**

- –

**6. Pre-inspection work**

- Check that the battery voltage is in the normal range.

**7. After-inspection work**

- Clear all past DTCs.
- Check that no DTC is stored after test drive.

**8. Estimated failure factors**

- Failure of the PM sensor
- Abnormality in the DPR filter.

## INSPECTION PROCEDURE: P24D1 (2 digit diagnosis code 12)

| 1 | Check the DTC detected (Engine ECU) [HINO DX II ] |
|---|---|

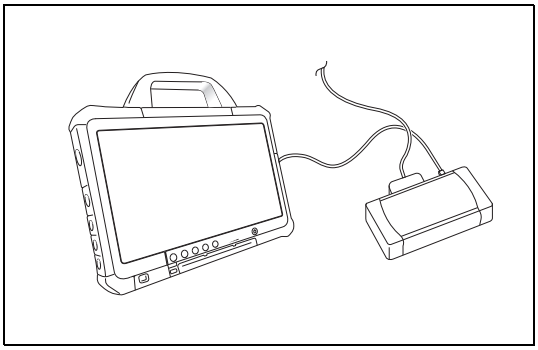

SAPH16F010301400

1. Set the starter switch to the "LOCK" position.
2. Connect the vehicle to HINO DX II .
3. Set the starter switch to the "ON" position.
4. Select [Engine] and check if any DTC other than P24D1 has been detected.

**Has DTC other than P24D1 been detected?**

**YES**

**Go to the diagnostic procedure of a related DTC.**

**NO**

**Go to step 2.**

| 2 | Inspect the DPR filter |
|---|---|



Damage

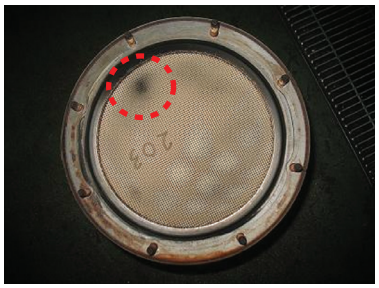

Soot leakage

SAPH16F010301401

1. Remove the DPR filter and check if there is no soot, damages or other abnormalities at its end.

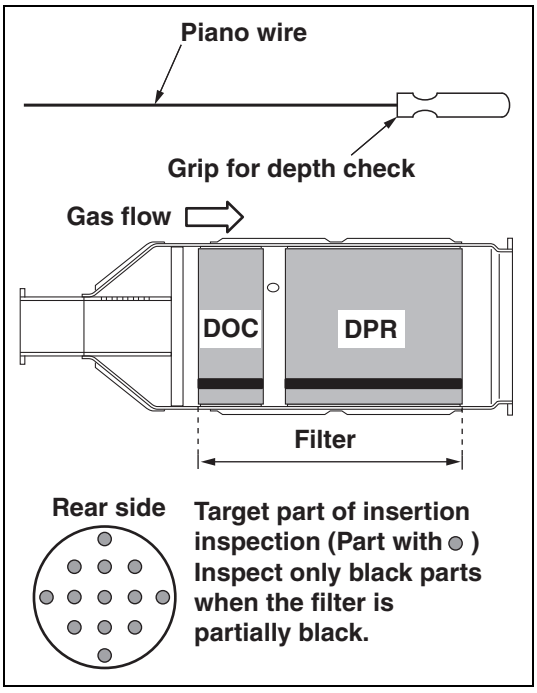


SAPH16F010301402

2. Insert the check probe from the rear surface to inspect the inside.

3. Check probe inserting depth.

| Standard values |
|---|
| 175 - 185 mm {6.890 - 7.283 in.} |

| Was any failure found? |
|---|

YES

**Replace the DPR filter and the PM sensor.**
**Perform "After-inspection work" of INFORMATION section.**

NO

**Replace the PM sensor.**
**Clear all past DTCs and then procedure completed.**
**Perform "After-inspection work" of INFORMATION section.**

# DTC: P24DA

EN01H16F01030F03001197

## P24DA: PM sensor exhaust sample error (2 digit diagnosis code 07)

INFORMATION

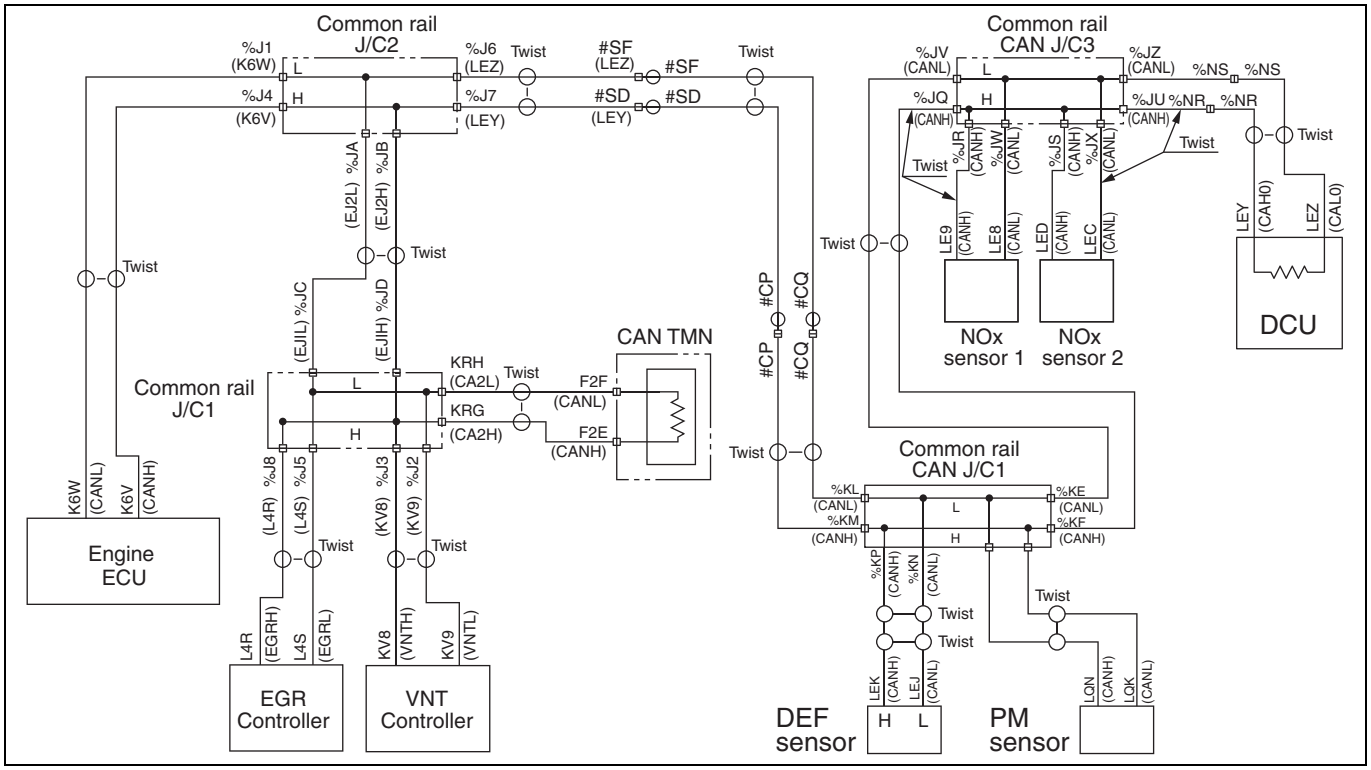


SAPH16F010301403

**1. Technical description**

- PM sensor head clogging is detected from the self-diagnosis function of the PM sensor.

**<Description of malfunction>**

- Failure of the PM sensor is detected.

**2. DTC set condition**

(1) DTC detection condition

- PM sensor is active.
- Battery power supply voltage is in the range of 10 V to 16 V.
- Starter switch remains ON (does not active for starter) for more than 5 seconds.

(2) Judgment criteria

- Abnormal is detected by the error diagnosis from PM sensor.

**3. Reset condition**

- After normal operation is restored and the starter switch is turned LOCK.

**4. Indication, warning or system control regulation when the DTC is set.**

- MIL: ON

**5. Symptoms on the vehicle when the DTC is set**

**<Symptoms on the vehicle due to backup control (fail safe function)>**

- Overlooking of the DPF damage

**<Symptoms on the vehicle due to malfunction>**

- –

**6. Pre-inspection work**

- Check that the battery voltage is in the normal range.

**7. After-inspection work**

- Clear all past DTCs.
- Check that no DTC is stored after test drive.

**8. Estimated failure factors**

- Failure of the PM sensor
- Illegal modification of the PM sensor.
- Abnormality in the DPR filter.

## INSPECTION PROCEDURE: P24DA (2 digit diagnosis code 07)

| 1 | Check the DTC detected (Engine ECU) |
|---|---|

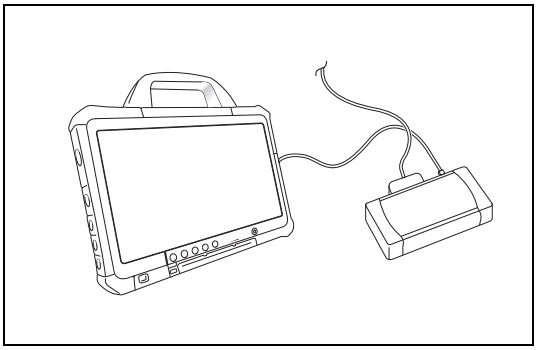

SAPH16F010301404

1. Set the starter switch to the "LOCK" position.
2. Connect the vehicle to HINO DX II .
3. Set the starter switch to the "ON" position.
4. Select [Engine] and check if any DTC other than P24DA has been detected.

**Has DTC other than P24DA been detected?**

**YES**

**Go to the diagnostic procedure of a related DTC. Perform "After-inspection work" of INFORMATION section.**

**NO**

**Go to step 2.**

| 2 | Check the PM sensor |
|---|---|



SAPH16F010301405

1. Remove the PM sensor to check if the head is normal. Check if the head has been modified illegally.

**Was any failure found?**

**YES**

**The part has been illegally modified. Please ask the customer to restore the original condition.**
**Perform diagnosis again after that.**

**NO**

**Go to step 3.**

| 3 | Check the PM sensor |
|---|---|

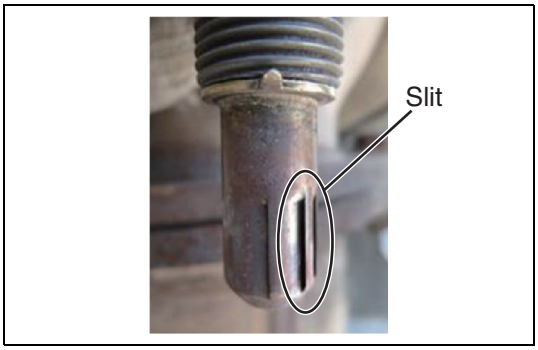


SAPH16F010301406

1. Check the slit and hole of the PM sensor head for clogging and collapse.

**Was any failure found?**

**YES**

**Go to step 4.**

**NO**

**Replace the PM sensor.**
**Perform "After-inspection work" of INFORMATION section.**

| 4 | Inspect the DPR filter |
|---|---|



Damage

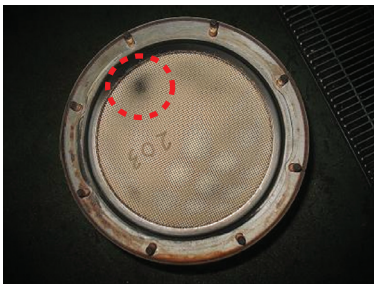

Soot leakage

SAPH16F010301407

1. Remove the DPR filter and check if there is no soot, damages or other abnormalities at its end.

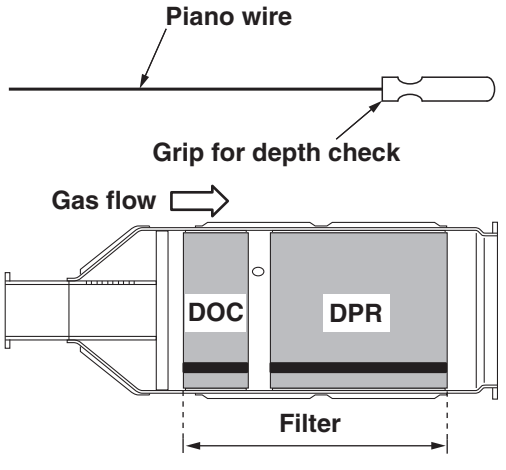


SAPH16F010301408

2. Insert the check probe from the rear surface to inspect the inside.

3. Check probe inserting depth.

| Standard values |
|---|
| 175 - 185 mm {6.890 - 7.283 in.} |

**Was any failure found?**

**YES**

**Replace the DPR filter and PM sensor.**
**Perform "After-inspection work" of INFORMATION section.**

**NO**

**Replace the PM sensor.**
**Perform "After-inspection work" of INFORMATION section.**

# DTC: P2563

EN01H16F01030F03001198

## P2563: Nozzle position sensor failure range (High level) (VNT actuator position sensor performance invalid)

INFORMATION

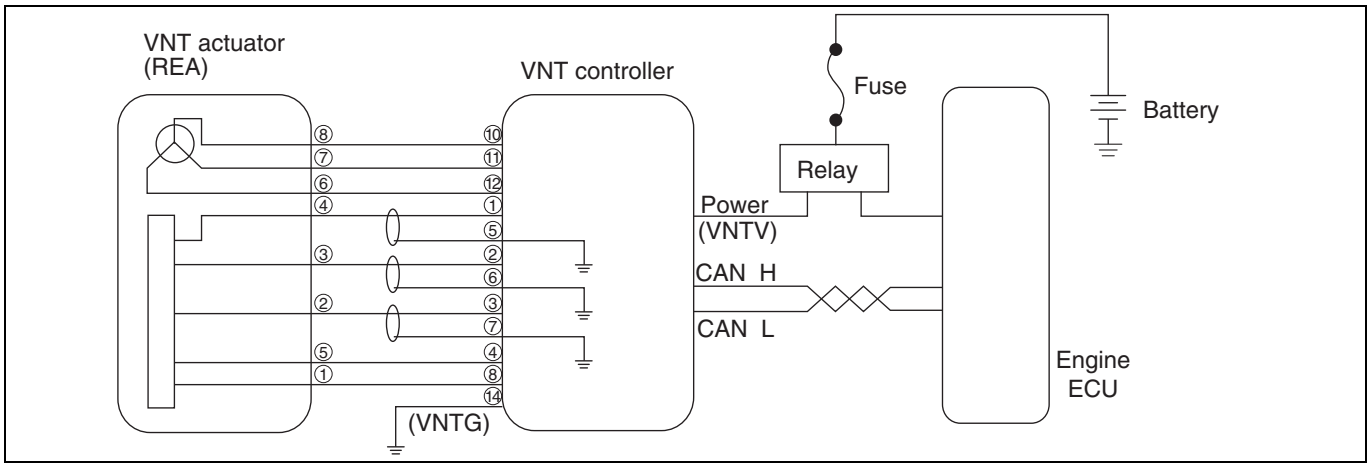


SAPH16F010301409

**1. Technical description**

- The VNT actuator steplessly operates the nozzle via the REA (Rotary Electric Actuator) and controls turbine speed and boost pressure.
- The VNT actuator (REA) has a position sensor and constantly monitors the target opening and the actual opening.
- Wiping operation is carried out when the engine is stopped and the soot, oil, and other impurities accumulated in the vane working range are removed. Also, the turbocharger mechanical working range is checked for trouble.

**<Description of malfunction>**

- –

**2. DTC set condition**

(1) DTC detection condition

- While the engine is in operation: Always
- While the engine is stopped: During wiping operation

(2) Judgment criteria

| Item | Details (Reference) |
|---|---|
| Position sensor failure | When faulty output value from sensor is measured 30 times in 1 second. |

**3. Reset condition**

- After normal operation is restored and the starter switch is on the "LOCK" position.

**4. Indication, warning or system control regulation when the DTC is set.**

- MIL: ON
- SVS light: OFF
- Engine output is restricted.
- Cruise control function is not available.
- Auxiliary brake function is not available.

**5. Symptoms on the vehicle when the DTC is set**

**<Symptoms on the vehicle due to backup control (fail safe function)>**

- Engine output is insufficient.
- Cruise control does not work.
- Auxiliary brake does not work.

**<Symptoms on the vehicle due to malfunction>**

- Engine output is restricted.

**6. Pre-inspection work**

- Check that the battery voltage is in the normal range.

**7. After-inspection work**

- Clear all past DTCs.
- Check that no DTC is detected after test drive.

**8. Estimated failure factors**

- Faulty contact in VNT actuator (REA) connector
- Harness disconnection or short-circuit
- Actuator internal sensor failure
- Controller internal failure

## INSPECTION PROCEDURE: P2563

| 1 | Check the DTC detected 1 (Engine ECU) [HINO DX II ] |
|---|---|

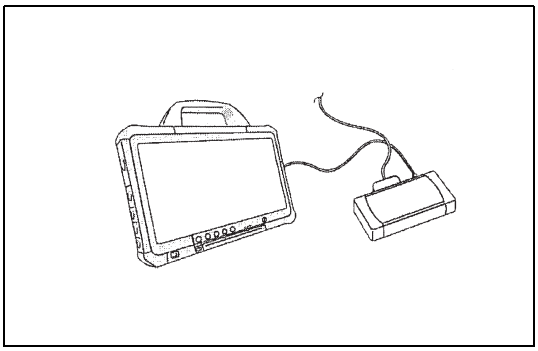

SAPH16F010301410

1. Connect the vehicle to HINO DX II .
2. Set the starter switch to the "ON" position.
3. Select [Engine] and check if any DTC other than P2563 (for example U010C) has been detected.

**HINT**
**Due to CAN communication failures, P2563 may have been detected.**

**Has a DTC other than P2563 (for example U010C) been detected?**

**YES**

**Go to diagnosis procedure of a related DTC.**
**Go to step 2 after repair.**

**NO**

**Go to step 3.**

| 2 | Check the DTC detected 2 (Engine ECU) [HINO DX II ] |
|---|---|

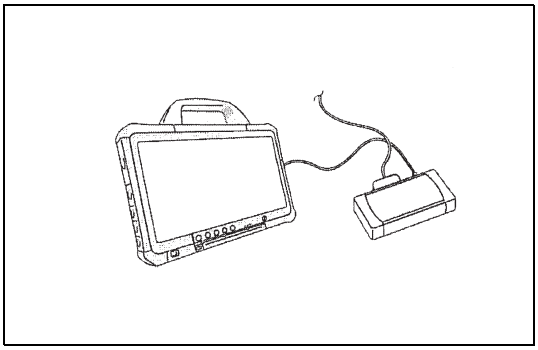

SAPH16F010301411

1. Set the starter switch to the "ON" position.
2. Select [Engine] and check if P2563 has been detected.

**Has DTC P2563 been detected?**

**YES**

**Go to step 3.**

**NO**

**Procedure completed.**
**Perform "After-inspection work" of INFORMATION section.**

## 3 Check the connector connection [HINO DX ll ]

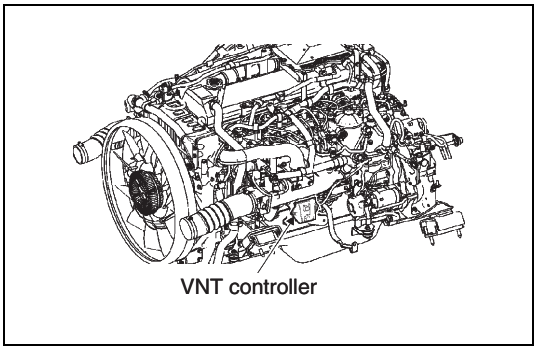


SAPH16F010301412

1. Set the starter switch to the "LOCK" position.
2. Disconnect the connector connecting the VNT actuator and VNT controller and then securely re-connect it.
3. Set the starter switch to the "ON" position.
4. Select [Engine] and check if P2563 has been detected.

**Has DTC P2563 been detected?**

**YES**

**Go to step 4.**

**NO**

**Procedure completed.**
**(Poor contact of the connector)**
**Perform "After-inspection work" of INFORMATION section.**

## 4 Inspect the VNT actuator harness

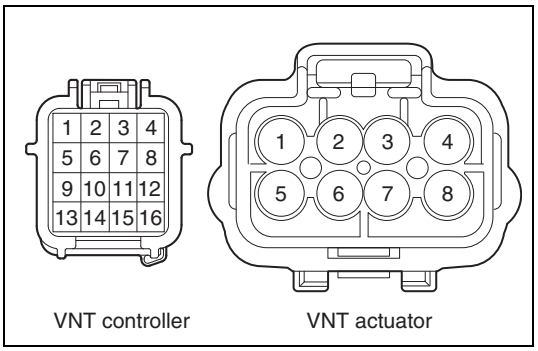


SAPH16F010301413

1. Set the starter switch to the "LOCK" position.
2. Disconnect the connector connecting the VNT actuator and VNT controller.
3. Use the electrical tester to measure the resistance from the VNT controller vehicle-side connector to each of the terminals in the VNT actuator vehicle-side connector.

| Measurement conditions | Tester connections | Standard values |
|---|---|---|
| **Starter switch: LOCK** | **Controller – Actuator**<br>**1 terminal – 4 terminal**<br>**2 terminal – 3 terminal**<br>**3 terminal – 2 terminal**<br>**4 terminal – 5 terminal**<br>**8 terminal – 1 terminal** | **1 Ω or less** |

**Do the measurements meet the standard value?**

YES

**Go to step 5.**

NO

**Repair or replace the harness.**
**Perform "After-inspection work" of INFORMATION section.**

| 5 | **Replace the VNT controller [HINO DX ll ]** |
|---|---|

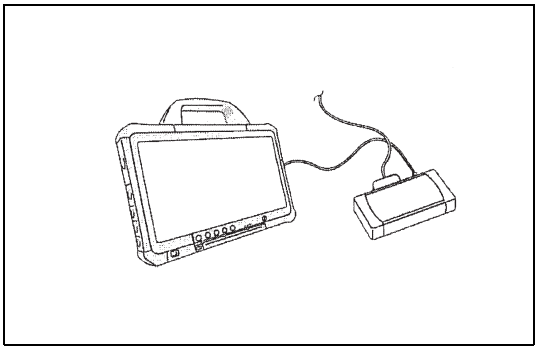

SAPH16F010301414

1. Set the starter switch to the "LOCK" position.
2. Replace the VNT controller with a new one.
3. Set the starter switch to the "ON" position.
4. Erase the trouble history using HINO DX II .
5. Set the starter switch to the "LOCK" position.
6. Set the starter switch to the "ON" position again.
7. Select [Engine] and check if P2563 has been detected.

**Has DTC P2563 been detected?**

YES

**Replace the turbocharger.**
**Perform "After-inspection work" of INFORMATION section.**

NO

**Procedure completed.**
**Perform "After-inspection work" of INFORMATION section.**

# DTC: P2564 and P2565

EN01H16F01030F03001199

## P2564: Nozzle position sensor failure range (Low level) (VNT actuator position sensor signal too low)

INFORMATION

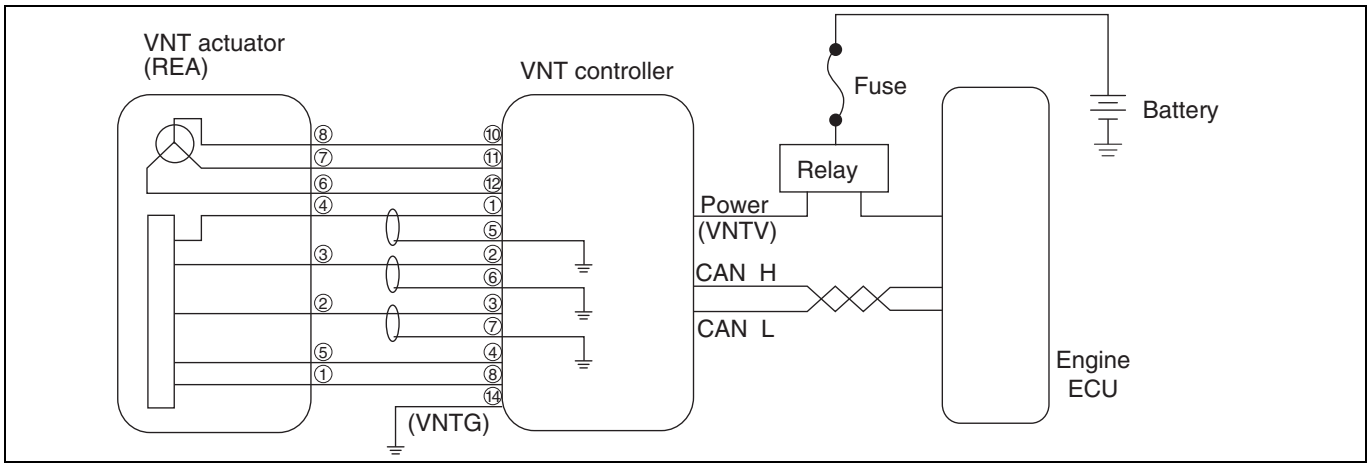


SAPH16F010301415

**1. Technical description**

- The VNT actuator steplessly operates the nozzle via the REA (Rotary Electric Actuator) and controls turbine speed and boost pressure.
- The VNT actuator (REA) has a position sensor and constantly monitors the target opening and the actual opening.
- Wiping operation is carried out when the engine is stopped and the soot, oil, and other impurities accumulated in the vane working range are removed. Also, the turbocharger mechanical working range is checked for trouble.

**2. DTC set condition**

(1) DTC detection condition

- While the engine is in operation: Always
- While the engine is stopped: During wiping operation

(2) Judgment criteria

| Item | Details (Reference) |
|---|---|
| Position sensor failure | When faulty output value from sensor is measured 30 times in 1 second. |

**3. Reset condition**

- After normal operation is restored and the starter switch is on the "LOCK" position.

**4. Indication, warning or system control regulation when the DTC is set.**

- MIL: ON
- SVS light: OFF
- Engine output is restricted.
- Cruise control function is not available.
- Auxiliary brake function is not available.

**5. Symptoms on the vehicle when the DTC is set**

**<Symptoms on the vehicle due to backup control (fail safe function)>**

- Engine output is insufficient.
- Cruise control does not work.
- Auxiliary brake does not work.

**<Symptoms on the vehicle due to malfunction>**

- –

**6. Pre-inspection work**

- Check that the battery voltage is in the normal range.

**7. After-inspection work**

- Clear all past DTCs.
- Check that no DTC is detected after test drive.

**8. Estimated failure factors**

- Faulty contact in VNT actuator (REA) connector
- Harness disconnection or short-circuit
- Actuator internal sensor failure
- Controller internal failure

## P2565: Nozzle position sensor failure range (High level) (VNT actuator position sensor signal too high)

INFORMATION

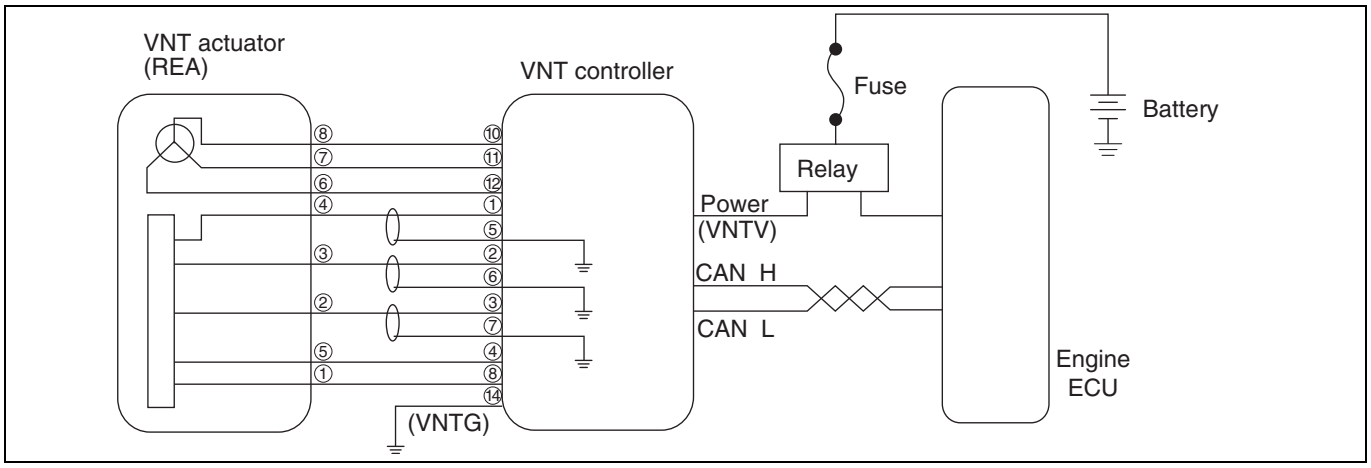


SAPH16F010301416

**1. Technical description**

- The VNT actuator steplessly operates the nozzle via the REA (Rotary Electric Actuator) and controls turbine speed and boost pressure.
- The VNT actuator (REA) has a position sensor and constantly monitors the target opening and the actual opening.
- Wiping operation is carried out when the engine is stopped and the soot, oil, and other impurities accumulated in the vane working range are removed. Also, the turbocharger mechanical working range is checked for trouble.

**2. DTC set condition**

(1) DTC detection condition

- While the engine is in operation: Always
- While the engine is stopped: During wiping operation

(2) Judgment criteria

| Item | Details (Reference) |
|---|---|
| Position sensor failure | When faulty output value from sensor continues for 1 second. |

**3. Reset condition**

- After normal operation is restored and the starter switch is on the "LOCK" position.

**4. Indication, warning or system control regulation when the DTC is set.**

- MIL: ON
- SVS light: OFF
- Engine output is restricted.
- Cruise control function is not available.
- Auxiliary brake function is not available.

**5. Symptoms on the vehicle when the DTC is set**

**<Symptoms on the vehicle due to backup control (fail safe function)>**

- Engine output is insufficient.
- Cruise control does not work.
- Auxiliary brake does not work.

**<Symptoms on the vehicle due to malfunction>**

- –

**6. Pre-inspection work**

- Check that the battery voltage is in the normal range.

**7. After-inspection work**

- Clear all past DTCs.
- Check that no DTC is detected after test drive.

**8. Estimated failure factors**

- Faulty contact in VNT actuator (REA) connector
- Harness disconnection or short-circuit
- Actuator internal sensor failure
- Controller internal failure

## INSPECTION PROCEDURE: P2564 and P2565

| 1 | Check the DTC detected 1 (Engine ECU) [HINO DX II ] |
|---|---|

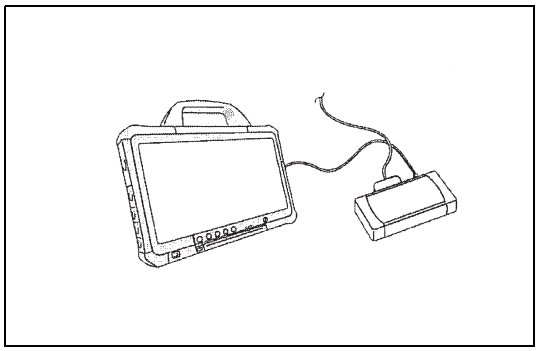

SAPH16F010301417

1. Connect the vehicle to HINO DX II .
2. Set the starter switch to the "ON" position.
3. Select [Engine] and check if any DTC other than DTC P2564 or P2565 (for example U010C) has been detected.

**HINT**
**Due to CAN communication failures, P2564 or P2565 may have been detected.**

**Has a DTC other than DTC P2564 or P2565 (for example U010C) been detected?**

**YES**

**Go to diagnosis procedure of a related DTC.**
**Go to step 2 after repair.**

**NO**

**Go to step 3.**

| 2 | Check the DTC detected 2 (Engine ECU) [HINO DX II ] |
|---|---|

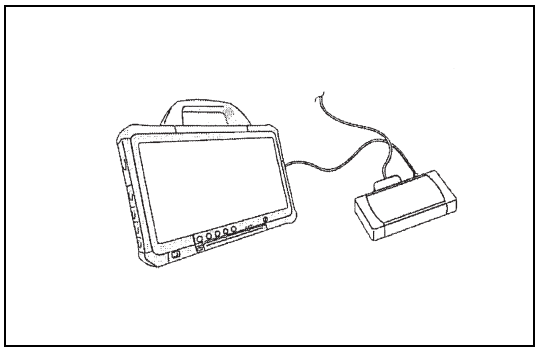

SAPH16F010301418

1. Set the starter switch to the "ON" position.
2. Select [Engine] and check if the DTC (P2564 or P2565) has been detected.

**Has DTC (P2564 or P2565) been detected?**

**YES**

**Go to step 3.**

**NO**

**Procedure completed.**
**Perform "After-inspection work" of INFORMATION section.**

| 3 | Check the connector connection [HINO DX ll ] |
|---|---|

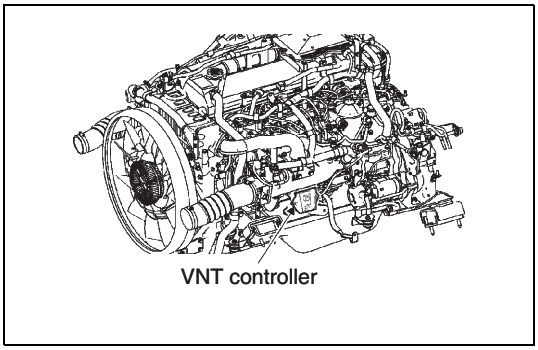


SAPH16F010301419

1. Set the starter switch to the "LOCK" position.
2. Disconnect the connector connecting the VNT actuator and VNT controller and then securely re-connect it.
3. Set the starter switch to the "ON" position.
4. Select [Engine] and check if the DTC (P2564 or P2565) has been detected.

**Has DTC (P2564 or P2565) been detected?**

**YES**

**Go to step 4.**

**NO**

**Procedure completed.**
**(Poor contact of the connector)**
**Perform "After-inspection work" of INFORMATION section.**

| 4 | Inspect the VNT actuator harness |
|---|---|

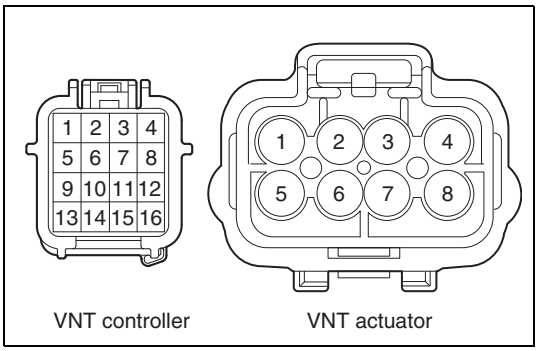


SAPH16F010301420

1. Set the starter switch to the "LOCK" position.
2. Disconnect the connector connecting the VNT actuator and VNT controller.
3. Use the electrical tester to measure the resistance from the VNT controller vehicle-side connector to each of the terminals in the VNT actuator vehicle-side connector.

| Measurement conditions | Tester connections | Standard values |
|---|---|---|
| **Starter switch: LOCK** | **Controller – Actuator**<br>**1 terminal – 4 terminal**<br>**2 terminal – 3 terminal**<br>**3 terminal – 2 terminal**<br>**4 terminal – 5 terminal**<br>**8 terminal – 1 terminal** | **1 Ω or less** |

**Do the measurements meet the standard value?**

YES

**Go to step 5.**

NO

**Repair or replace the harness.**
**Perform "After-inspection work" of INFORMATION section.**

| 5 | **Replace the VNT controller [HINO DX ll ]** |
|---|---|

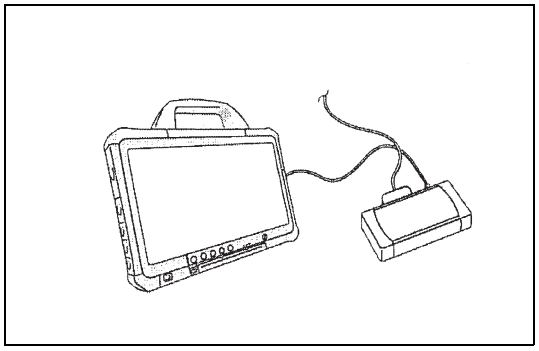

SAPH16F010301421

1. Set the starter switch to the "LOCK" position.
2. Replace the VNT controller with a new one.
3. Set the starter switch to the "ON" position.
4. Erase the trouble history using HINO DX II .
5. Set the starter switch to the "LOCK" position.
6. Set the starter switch to the "ON" position again.
7. Select [Engine] and check if the DTC (P2564 or P2565) has been detected.

**Has DTC (P2564 or P2565) been detected?**

YES

**Replace the turbocharger.**
**Perform "After-inspection work" of INFORMATION section.**

NO

**Procedure completed.**
**Perform "After-inspection work" of INFORMATION section.**

# DTC: P259E

EN01H16F01030F03001200

## P259E: Nozzle operating range failure -NARROW (VNT actuator wiping error (too narrow range))

INFORMATION

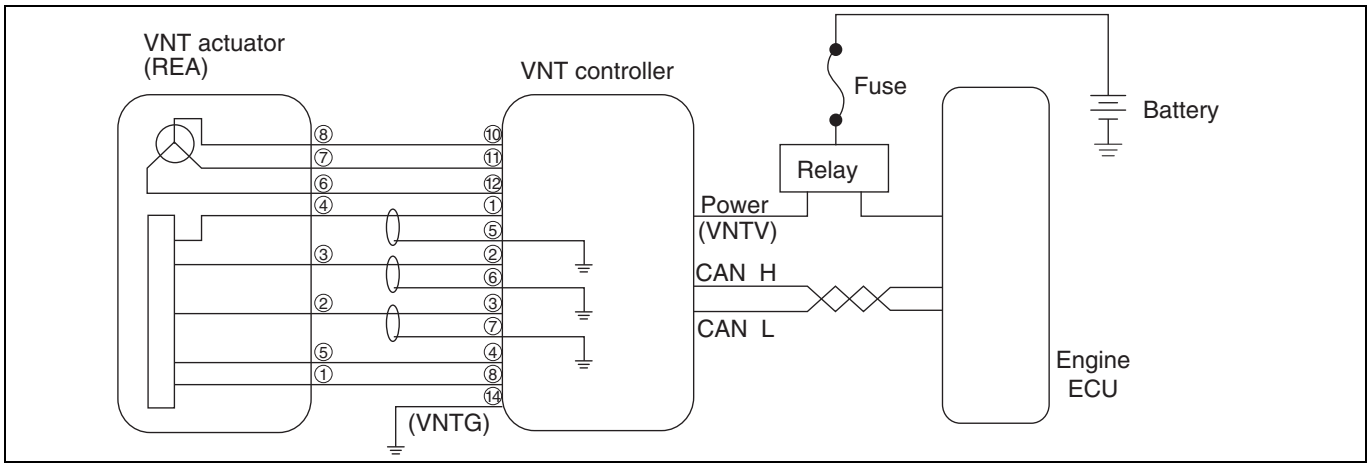


SAPH16F010301422

**1. Technical description**

- The VNT actuator steplessly operates the nozzle via the REA (Rotary Electric Actuator) and controls turbine speed and boost pressure.
- The VNT actuator (REA) has a position sensor and constantly monitors the target opening and the actual opening.
- Wiping operation is carried out when the engine is stopped and the soot, oil, and other impurities accumulated in the vane working range are removed. Also, the turbocharger mechanical working range is checked for trouble.

**<Description of malfunction>**

- –

**2. DTC set condition**

(1) DTC detection condition

- While the engine is in operation: Always
- While the engine is stopped: During wiping operation

(2) Judgment criteria

| Item | Details (Reference) |
|---|---|
| 1. Wiping failure | When a wiping operating range narrower than Lo range is detected 2 times. |

**3. Reset condition**

- After normal operation is restored and the starter switch is on the "LOCK" position.

**4. Indication, warning or system control regulation when the DTC is set.**

- MIL: ON
- SVS light: OFF
- Engine output is restricted.
- Cruise control function is not available.
- Auxiliary brake function is not available.

**5. Symptoms on the vehicle when the DTC is set**

**<Symptoms on the vehicle due to backup control (fail safe function)>**

- Engine output is insufficient.
- Cruise control does not work.
- Auxiliary brake does not work.

**<Symptoms on the vehicle due to malfunction>**

- Engine output is restricted.

**6. Pre-inspection work**

- Check that the battery voltage is in the normal range.

**7. After-inspection work**

- Clear all past DTCs.
- Check that no DTC is detected after test drive.

**8. Estimated failure factors**

- VNT link is stuck or cannot operate due to rust, etc.

## INSPECTION PROCEDURE: P259E

| 1 | Check the DTC detected 1 (Engine ECU) [HINO DX II ] |
|---|---|

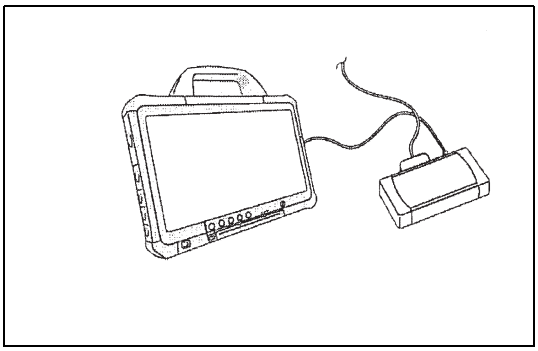

SAPH16F010301423

1. Connect the vehicle to HINO DX II .
2. Set the starter switch to the "ON" position.
3. Select [Engine] on the screen of HINO DX II and check if any DTC other than P259E (for example, U10C) has been detected.

**HINT**
**Due to CAN communication failures, P259E may have been detected.**

**Has a DTC other than P259E been detected?**

**YES**

**Go to the diagnostic procedure of a related DTC.**
**After repair, go to step 2.**

**NO**

**Go to step 3.**

| 2 | Check the DTC detected 2 (Engine ECU) [HINO DX II ] |
|---|---|

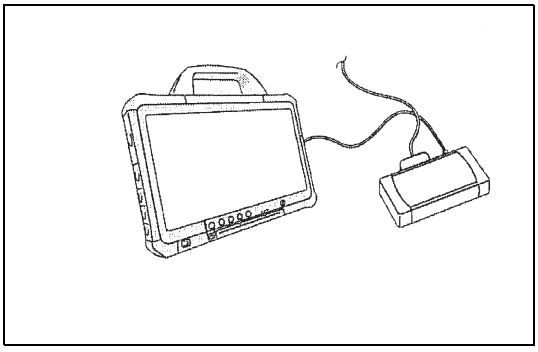

SAPH16F010301424

1. Set the starter switch to the "ON" position.
2. Select [Engine] and check if P259E has been detected.

**Has DTC P259E been detected?**

**YES**

**Go to step 3.**

**NO**

**Procedure completed.**
**Perform "After-inspection work" of INFORMATION section.**

| 3 | Check the turbocharger external appearance |
|---|---|

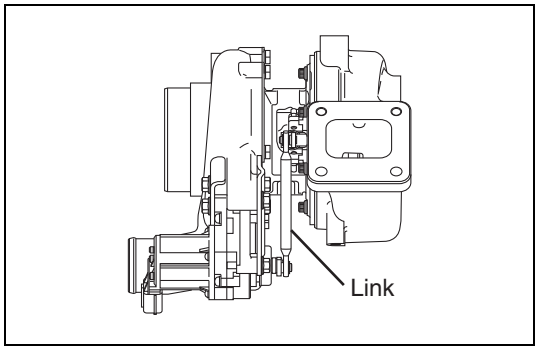


SAPH16F010301425

1. Check the turbocharger external appearance and make sure no foreign substances are trapped around the link.

**Was any failure found?**

**YES**

**Remove foreign substance, and go to step 4.**

**NO**

**Go to step 4.**

| 4 | Check the operation of the VNT controller [HINO DX II ] |
|---|---|

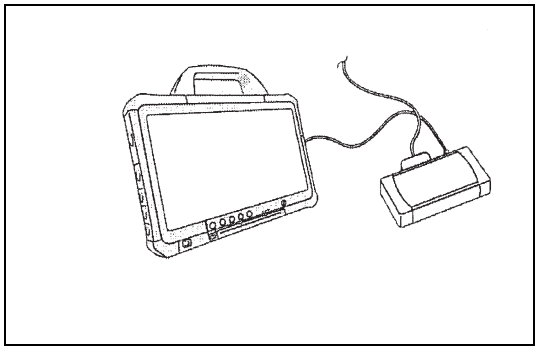

SAPH16F010301426

1. Set the starter switch to the "ON" position.
2. Erase the trouble history using HINO DX II .
3. Set the starter switch to the "LOCK" position.
4. Set the starter switch to the "ON" position again.
5. Select [Engine] and check if P259E has been detected.

**HINT**

**Turn the starter switch OFF and ON verifies the wiping operation of the VNT actuator (DC motor).**

| Measurement conditions |
|---|
| Starter switch: LOCK → ON |

**Has DTC P259E been detected?**

**YES**

**Replace the turbocharger.**
**Perform "After-inspection work" of INFORMATION section.**

**NO**

**Go to step 5.**

| 5 | Check the response delay of the VNT controller 2 [HINO DX II ] |
|---|---|

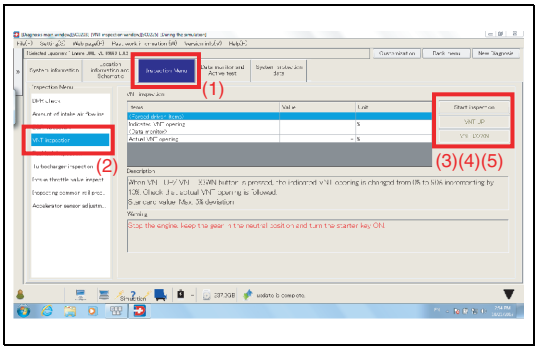


SAPH16F010301427

1. Select [Inspection Menu] from the menu, then inspect the response delay at the Target VNT position and Actual VNT position.

**⚠ CAUTION**
**Perform the inspection while the engine is stopped to avoid damages.**

<Inspection procedure>
(1) Select [Inspection Menu].
(2) Select [VNT inspection].
(3) Click [Start inspection].
(4) Select [VNT UP]:
• Inspect the response delay at each step of the Target VNT position and Actual VNT position from 0 to 90 %.
(5) Select [VNT DOWN]:
• Inspect the response delay at each step of the Target VNT position and Actual VNT position from 90 to 0 %.

**HINT**
**The VNT opening position changes of around 10 % per step between 0 – 90 %.**

| Standard values |
|---|
| **From the Target VNT position to the Actual VNT position, the response delay should be within 3 seconds.** |

**Do the measurements meet the standard value?**

**YES**

**Procedure completed.**
**Perform "After-inspection work" of INFORMATION section.**

**NO**

**Replace the turbocharger.**
**Perform "After-inspection work" of INFORMATION section.**

# DTC: P259F

EN01H16F01030F03001201

## P259F: Nozzle operating range failure -WIDE (VNT actuator wiping error (too wide range))

INFORMATION

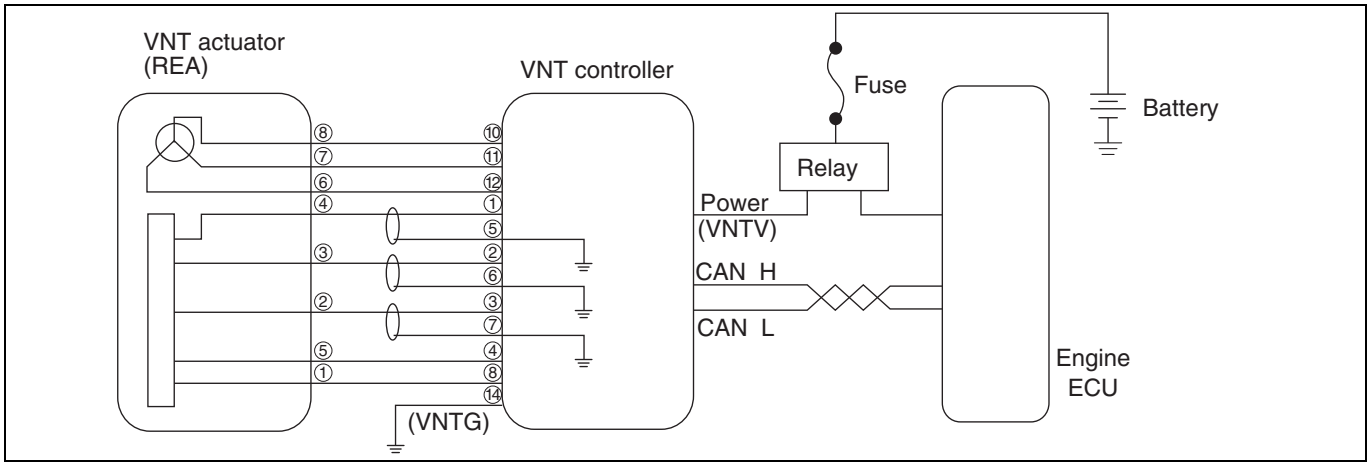


SAPH16F010301428

**1. Technical description**

- The VNT actuator steplessly operates the nozzle via the REA (Rotary Electric Actuator) and controls turbine speed and boost pressure.
- The VNT actuator (REA) has a position sensor and constantly monitors the target opening and the actual opening.
- Wiping operation is carried out when the engine is stopped and the soot, oil, and other impurities accumulated in the vane working range are removed. Also, the turbocharger mechanical working range is checked for trouble.

**<Description of malfunction>**

- –

**2. DTC set condition**

(1) DTC detection condition

- While the engine is in operation: Always
- While the engine is stopped: During wiping operation.

(2) Judgment criteria

| Item | Details (Reference) |
|---|---|
| 1. Wiping failure | When a wiping operating range wider than HI range is detected 2 times. |

**3. Reset condition**

- After normal operation is restored and the starter switch is on the "LOCK" position.

**4. Indication, warning or system control regulation when the DTC is set.**

- MIL: ON
- SVS light: OFF
- Engine output is restricted.
- Cruise control function is not available.
- Auxiliary brake function is not available.

**5. Symptoms on the vehicle when the DTC is set**

**<Symptoms on the vehicle due to backup control (fail safe function)>**

- Engine output is insufficient.
- Cruise control does not work.
- Auxiliary brake does not work.

**<Symptoms on the vehicle due to malfunction>**

- –

**6. Pre-inspection work**

- Check that the battery voltage is in the normal range.

**7. After-inspection work**

- Clear all past DTCs.
- Check that no DTC is detected after test drive.

**8. Estimated failure factors**

- Disconnection of external link

## INSPECTION PROCEDURE: P259F

| 1 | Check the DTC detected 1 (Engine ECU) [HINO DX II ] |
|---|---|

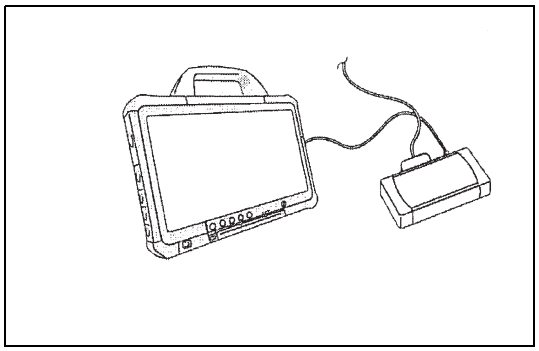

SAPH16F010301429

1. Connect the vehicle to HINO DX II .
2. Set the starter switch to the "ON" position.
3. Select [Engine] on the screen of HINO DX II and check if any DTC other than P259F (for example, U10C) has been detected.

**HINT**
**Due to CAN communication failures, P259F may have been detected.**

**Has a DTC other than P259F been detected?**

**YES**

**Go to the diagnostic procedure of a related DTC.**
**After repair, go to step 2.**

**NO**

**Go to step 3.**

| 2 | Check the DTC detected 2 (Engine ECU) [HINO DX II ] |
|---|---|

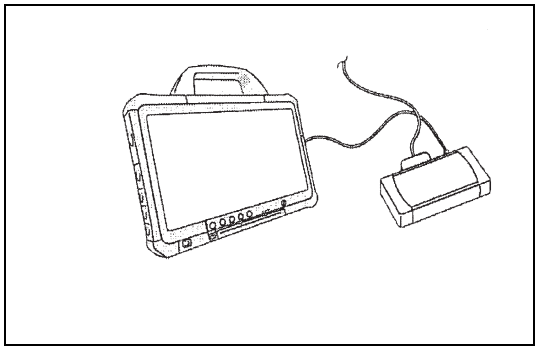

SAPH16F010301430

1. Set the starter switch to the "ON" position.
2. Select [Engine] and check if P259F has been detected.

**Has DTC P259F been detected?**

**YES**

**Go to step 3.**

**NO**

**Procedure completed.**
**Perform "After-inspection work" of INFORMATION section.**

| 3 | Check operation of VNT controller [HINO DX II ] |
|---|---|

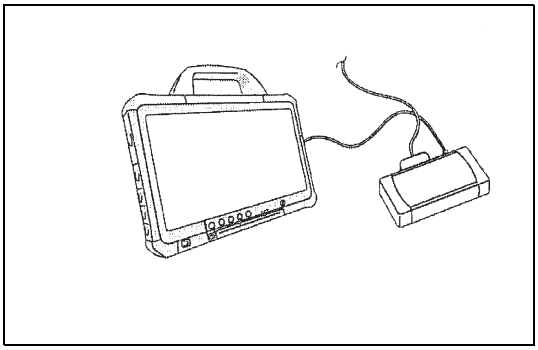

SAPH16F010301431

1. Set the starter switch to the "ON" position.
2. Erase the trouble history using HINO DX II .
3. Set the starter switch to the "LOCK" position.
4. Set the starter switch to the "ON" position again.
5. Select [Engine] and check if P259F has been detected.

**HINT**
**Turn the starter switch OFF and ON verifies the wiping operation of the VNT actuator (DC motor).**

| Measurement conditions |
|---|
| Starter switch: LOCK → ON |

**Has DTC P259F been detected?**

**YES**

**Replace the turbocharger.**
**Perform "After-inspection work" of INFORMATION section.**

**NO**

**Go to step 4.**

| 4 | Check the response delay of the VNT controller 2 [HINO DX II ] |
|---|---|

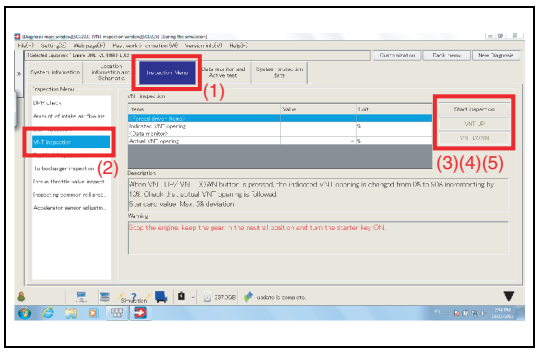


SAPH16F010301432

1. Select [Inspection Menu] from the menu, then inspect the response delay at the Target VNT position and Actual VNT position.

**⚠ CAUTION**
**Perform the inspection while the engine is stopped to avoid damages.**

<Inspection procedure>
(1) Select [Inspection Menu].
(2) Select [VNT inspection].
(3) Click [Start inspection].
(4) Select [VNT UP]:
• Inspect the response delay at each step of the Target VNT position and Actual VNT position from 0 to 90 %.
(5) Select [VNT DOWN]:
• Inspect the response delay at each step of the Target VNT position and Actual VNT position from 90 to 0 %.

**HINT**
**The VNT opening position changes of around 10 % per step between 0 – 90 %.**

| Standard values |
|---|
| From the Target VNT position to the Actual VNT position, the response delay should be within 3 seconds. |

**Do the measurements meet the standard value?**

**YES**

**Procedure completed.**
**Perform "After-inspection work" of INFORMATION section.**

**NO**

**Replace the turbocharger.**
**Perform "After-inspection work" of INFORMATION section.**

# DTC: P2635

EN01H16F01030F03001202

## P2635: Supply Pump Low Flow/Performance

INFORMATION

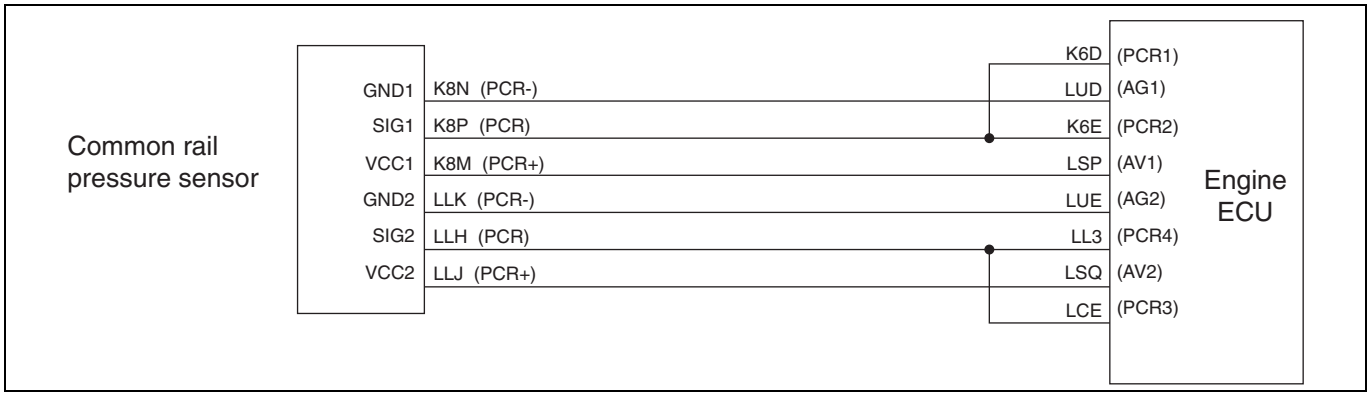


SAPH16F010301433

**1. Technical description**

- Excessively high common rail pressure (this duration varies depending on the engine speed) is detected.

**<Description of malfunction>**

- Supply pump was exposed to abnormally high pressure.

**2. DTC set condition**

(1) DTC detection condition

- Battery voltage is in the range of 10 V to 16 V.
- Common rail pressure sensor; no malfunction.

(2) Judgment criteria

- Common rail pressure ≥ threshold map
- 60 sec continue

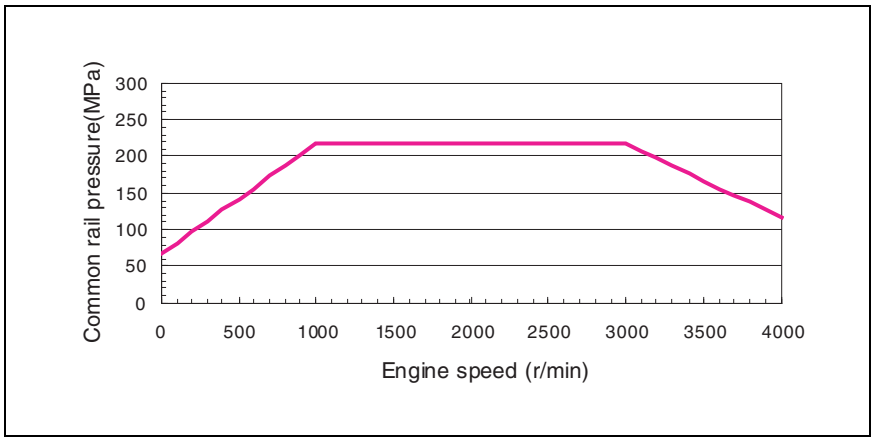


**3. Reset condition**

- After normal operation is restored and the starter switch is on the "LOCK" position.

**4. Indication, warning or system control regulation when the DTC is set.**

- MIL: OFF
- SVS light: OFF

**5. Symptoms on the vehicle when the DTC is set**

**<Symptoms on the vehicle due to backup control (fail safe function)>**

- –

**<Symptoms on the vehicle due to malfunction>**

- –

**6. Pre-inspection work**

- Check that the battery voltage is in the normal range.

**7. After-inspection work**

- Clear all past DTCs.
- Check that no DTC is stored after test drive.

**8. Estimated failure factors**

- Supply pump failure
- Malfunction of engine ECU

## INSPECTION PROCEDURE: P2635

| 1 | Inspect the start of the engine |
|---|---|

1. Inspect the start of the engine.

**Does the engine start?**

| YES | NO |
|---|---|
| Go to step 4. | Go to step 2. |

| 2 | Inspect the supply pump |
|---|---|

1. Check if fuel is leaking or seeping out of the supply pump.

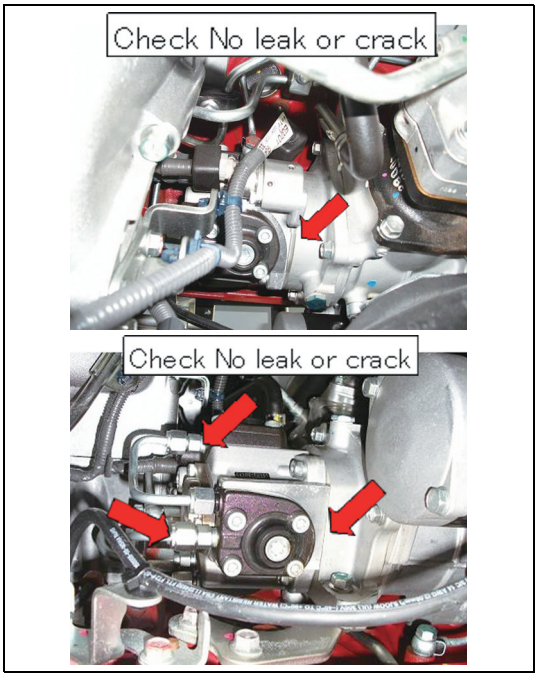


SAPH16F010301435

**Was any failure found?**

| YES | NO |
|---|---|
| Replace the supply pump, and go to step 4 after replacement. | Go to step 3. |

| 3 | Function check of supply pump [HINO DX II ] |
|---|---|

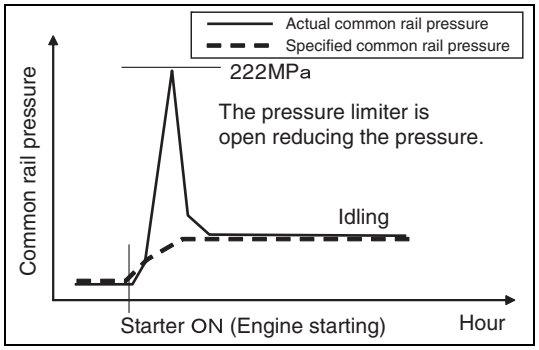

SAPH16F010301436

1. Connect the vehicle to HINO DX II .
2. Set the starter switch to the "ON" position.
3. Select [Engine].
4. Select [Actual common rail pressure] and [Target common rail pressure] in [Data monitor Setting].
5. Start the engine while checking the common rail pressure.

| Standard values |
|---|
| **The actual common rail pressure rises and stabilizes at a constant value.** |

**Was any failure found?**

**YES**

**Replace the supply pump, go to step 4 after replacement.**

**NO**

**Contact the Hino national service manager.**

| 4 | Check the engine ECU |
|---|---|

1. Check the engine ECU software part number (ECU part number) by HINO DX II .
   Confirm the latest part number with Hino national service manager.

**Does the engine ECU have the latest software number?**

**YES**

**Go to step 5.**

**NO**

**Reprogram the engine ECU by using HINO DX II and then go to step 5.**

| 5 | Inspect the pre fuel filter |
|---|---|

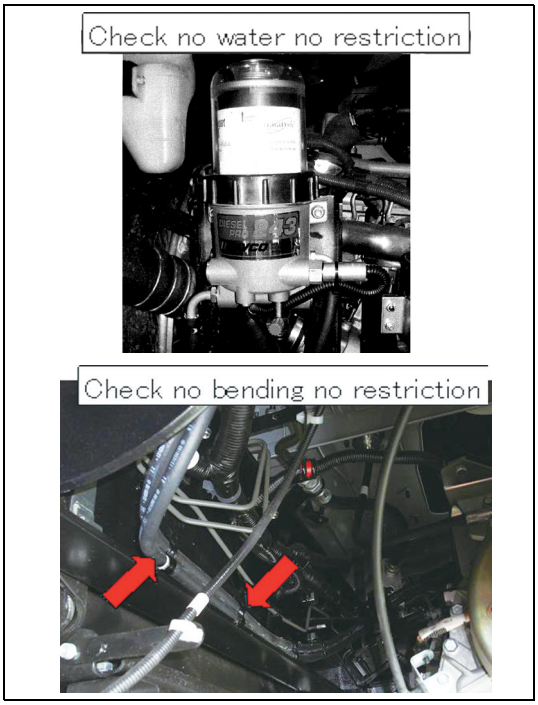


SAPH16F010301437

1. Check the pre fuel filter.
- Has the replacement period expired?
- Is it dirty, damaged, or clogged?
- Is it a genuine Hino part?

2. Check if the fuel inside the pre fuel filter is within the standard value.

| Measurement conditions | Standard values |
|---|---|
| **While engine is running** | • **At least 25.4 mm {1 in.} above collar and below the element upper level.**<br>• **Fuel level does not continue to drop during wide open throttle.** |

**Was any failure found?**

**YES**

**Replace the fuel filter element, and go to step 6.**

**NO**

**Go to step 11.**

| 6 | Inspect the fuel pipe and hose |
|---|---|

1. Check if the fuel pipe and hose between the fuel tank and fuel filter are clogged, punctured, or bent.

2. Make sure the fuel pipe joint bolts are not loose.

**Was any failure found?**

**YES**

**Repair or replace the faulty part, and go to step 7.**

**NO**

**Go to step 7.**

| 7 | Inspect the fuel tank breather |
|---|---|

1. Check if the breather hose is clogged, punctured, or bent.
2. Make sure the check valve is functioning normally.

**Was any failure found?**

**YES**

**Repair or replace the faulty part, and go to step 8.**

**NO**

**Go to step 8.**

| 8 | Inspect the fuel tank feed pipe |
|---|---|

1. Make sure the fuel tank feed pipe is not clogged.

**Was any failure found?**

**YES**

**Repair or replace the faulty part, and go to step 9.**

**NO**

**Go to step 9.**

| 9 | Inspect the fuel tank |
|---|---|

1. Drain fuel out of the fuel tank and check if there are foreign objects inside the tank.

**Was any failure found?**

**YES**

**Remove the foreign object and clean the fuel tank, then go to step 10.**

**NO**

**Go to step 10.**

| 10 | Inspect the supply pump gauze filter |
|---|---|

1. Make sure the gauze filter (built into the supply pump) is not clogged.

**Was any failure found?**

| YES | NO |
|---|---|
| Clean the gauze filter, and go to step 11. | Go to step 11. |

| 11 | Inspect the fuel high-pressure pipe |
|---|---|

1. Make sure the fuel high-pressure pipe is not leaking fuel.

**Was any failure found?**

| YES | NO |
|---|---|
| Repair or replace the faulty part, and go to step 12. | Go to step 12. |

| 12 | Inspect the fuel filter |
|---|---|

1. Make sure the fuel filter is not clogged.

**Was any failure found?**

| YES | NO |
|---|---|
| Repair or replace the faulty part, and go to step 13. | Go to step 13. |

| 13 | Inspect the SCV connector |
|---|---|

1. Check the connection of the SCV connector (Looseness or short-circuit).

**Was any failure found?**

| YES | NO |
|---|---|
| Repair or replace the faulty part, and go to step 14. | Go to step 14. |

| 14 | Inspect the common rail pressure sensor connector |
|---|---|

1. Check the connection of the common rail pressure sensor connector (Looseness or poor contact).

**Was any failure found?**

**YES**

**Repair or replace the faulty part, and go to step 15.**

**NO**

**Go to step 15.**

| 15 | Inspect the common rail pressure sensor power supply |
|---|---|

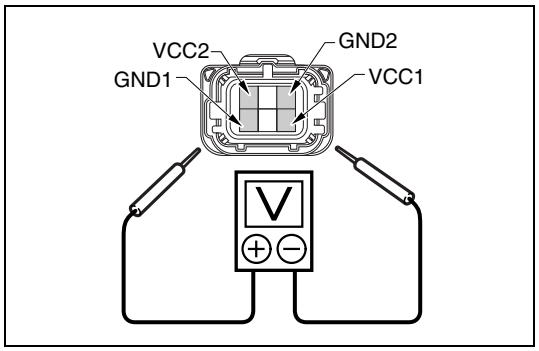


SAPH16F010301438

1. Disconnect the connector of the common rail pressure sensor.
2. Set the starter switch to the "ON" position.
3. Use the electrical tester to measure the voltage between the terminals of the common rail pressure sensor vehicle-side connector.

| Measurement conditions | Tester connections | Standard values |
|---|---|---|
| Starter switch: ON | Common rail pressure sensor vehicle-side connector<br>VCC1 – GND1<br>VCC2 – GND2 | 4.5 – 5.5 V |

**Do the measurements meet the standard value?**

**YES**

**Go to step 16.**

**NO**

**Repair the common rail pressure sensor and then go to step 16.**

| 16 | Inspect the crankshaft position sensor (engine speed main sensor) [HINO DX II ] |
|---|---|

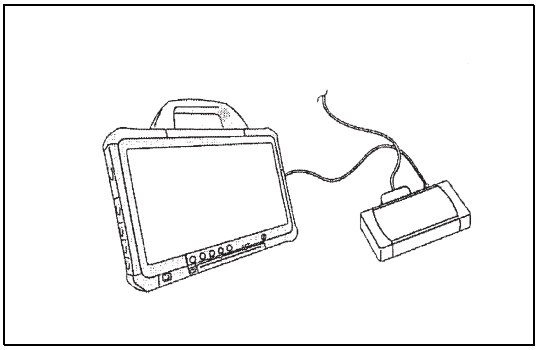

SAPH16F010301439

1. Set the starter switch to the "ON" position.
2. Select [Engine].
3. Select [NE sensor active flag], [G sensor active flag] in [Data monitor Setting].
4. Start the engine and confirm that the engine main speed sensor (NE) and sub speed sensor (G) operate (stay ON) continuously.

**Was any failure found?**

**YES**

**Check the faulty sensor and repair or replace if as needed.**
**After inspection, go to step 17.**

**NO**

**Go to step 17.**

| 17 | Inspect the fuel return pipe and hose |
|---|---|

1. Check if the fuel return pipe and hose are clogged.

**Was any failure found?**

**YES**

**Repair or replace the faulty part.**
**Perform "After-inspection work" of INFORMATION section.**

**NO**

**Procedure completed.**
**Perform "After-inspection work" of INFORMATION section.**

# DTC: P268A and P2696

EN01H16F01030F03001203

## P268A: Fuel injector adjustment data error

INFORMATION

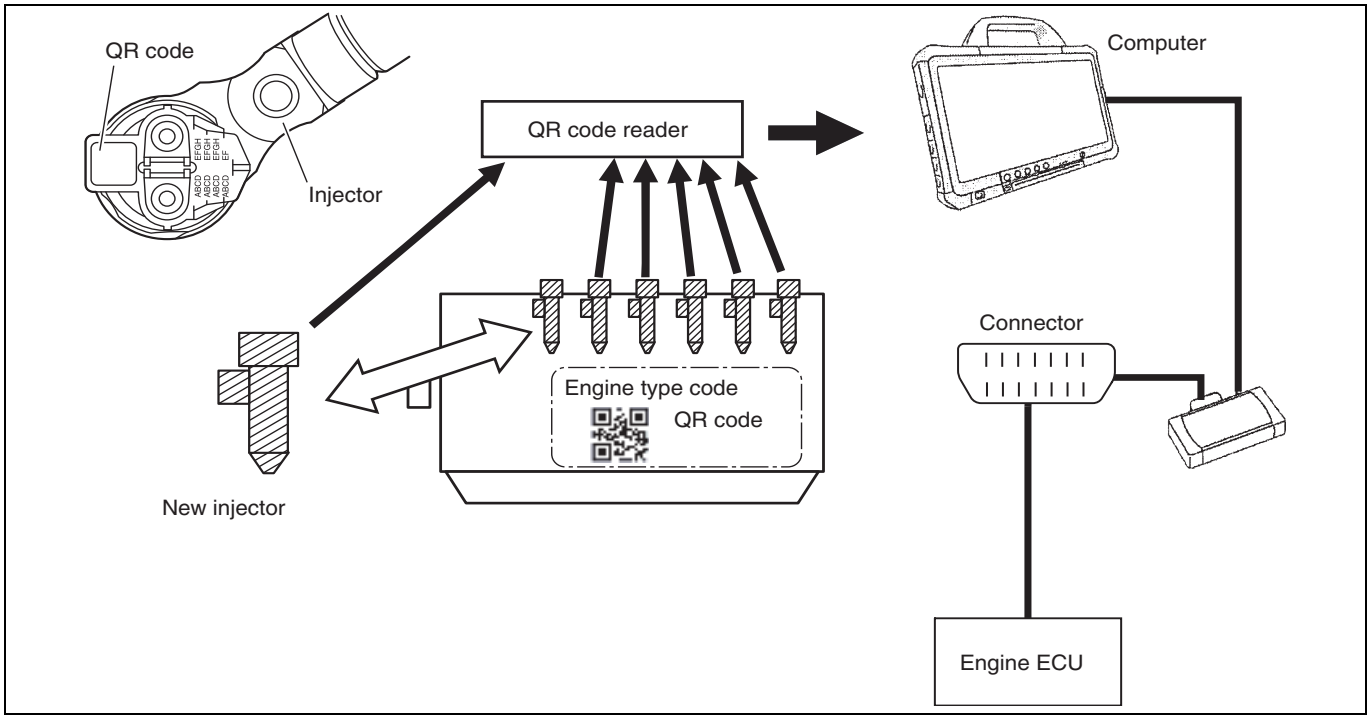


SAPH16F010301440

**1. Technical description**

- The fuel injection quantity is controlled by operation of the injector magnetic valve according to the injector valve-open interval instructions from the engine ECU. In order to correct for injector manufacturing variations, however, a variation correction value (injector correction value) is measured, and then written into the engine ECU, during the injector manufacturing process.

**<Description of malfunction>**

- Faulty injector correction value is detected.

**2. DTC set condition**

(1) DTC detection condition

- Correction data was not written in the engine ECU.
- Wrong correction data was written in the engine ECU.

(2) Judgment criteria

- Either of the two above detection conditions continues for at least 3 seconds.

**3. Reset condition**

- Just after restoration to normal condition.

**4. Indication, warning or system control regulation when the DTC is set.**

- MIL: ON
- SVS light: OFF

**5. Symptoms on the vehicle when the DTC is set**

**<Symptoms on the vehicle due to backup control (fail safe function)>**

- –

**<Symptoms on the vehicle due to malfunction>**

- –

**6. Pre-inspection work**

- Check that the battery voltage is in the normal range.

**7. After-inspection work**

- Clear all past DTCs.
- Check that no DTC is detected after test drive.

**8. Estimated failure factors**

- Data do not match correction data registered with the server.
- Correction data insertion error (Only when inserting the data by hand).
- Engine ECU failure

## P2696: Fuel injector adjustment data error

INFORMATION

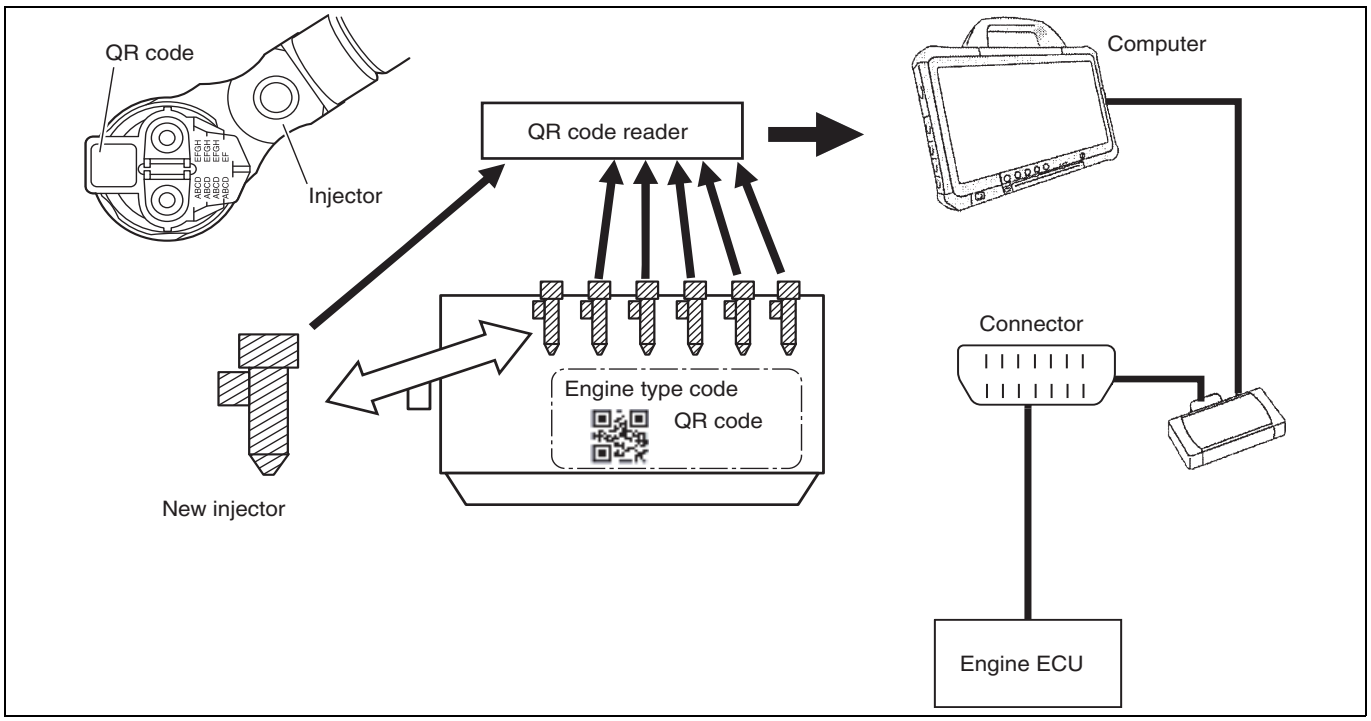


SAPH16F010301441

**1. Technical description**

- The fuel injection quantity is controlled by operation of the injector magnetic valve according to the injector valve-opening interval instructions from the engine ECU. In order to correct for injector manufacturing variations, however, a variation correction value (injector correction value) is measured, and then written into the engine ECU, during the injector manufacturing process.

**<Description of malfunction>**

- Faulty injector correction value is detected.

**2. DTC set condition**

(1) DTC detection condition

- Injector correction data inside the engine ECU abnormal.

(2) Judgment criteria

- Any of the above detection conditions continues for at least 3 seconds.

**3. Reset condition**

- Immediately after normal operation is restored.

**4. Indication, warning or system control regulation when the DTC is set.**

- MIL: ON
- SVS light: OFF

**5. Symptoms on the vehicle when the DTC is set**

**<Symptoms on the vehicle due to backup control (fail safe function)>**

- –

**<Symptoms on the vehicle due to malfunction>**

- –

**6. Pre-inspection work**

- Check that the battery voltage is in the normal range.

**7. After-inspection work**

- Clear all past DTCs.
- Check that no DTC is detected after test drive.

**8. Estimated failure factors**

- Data do not match correction data registered with the server.
- Engine ECU failure

## INSPECTION PROCEDURE: P268A and P2696

| 1 | Check the injector replace record |
|---|---|

1. Check injector replaced record.

**Does the injector have a replacement record?**

**YES**

**Go to step 3.**

**NO**

**Go to step 2.**

| 2 | Inspect the injector calibration data (QR CODE) [HINO DX II ] |
|---|---|

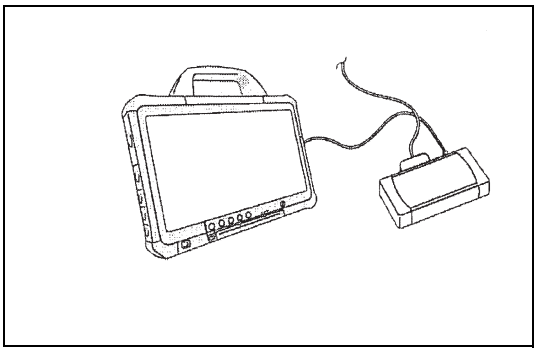

SAPH16F010301442

1. Obtain the injector calibration (correction) data from HINO service server and write to the ECU by using HINO DX II .
2. Erase the detected DTC and reload. Check if the DTC (P268A or P2696) is not detected.

**Has DTC (P268A or P2696) been detected?**

**YES**

**Go to step 3.**

**NO**

**Procedure completed.**
**Perform "After-inspection work" of INFORMATION section.**

| 3 | Inspect the injector calibration data (QR CODE) [HINO DX Ⅱ ] |
|---|---|

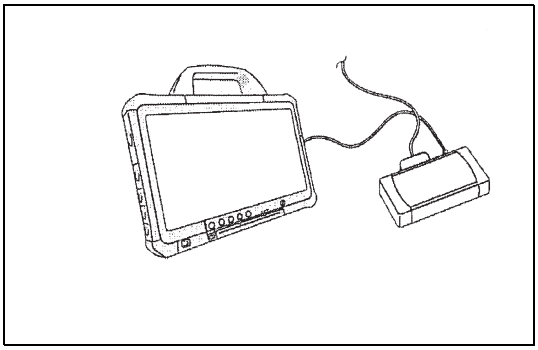

SAPH16F010301443

1. Read the injector calibration data /QR CODE of the injectors on the vehicle and write to the ECU by using HINO DX II .
2. Erase the detected DTC and reload. Check if the DTC (P268A or P2696) is not detected.

**Has DTC (P268A or P2696) been detected?**

**YES**

**Replace the engine ECU.**
**Perform "After-inspection work" of INFORMATION section.**

**NO**

**Procedure completed.**
**Perform "After-inspection work" of INFORMATION section.**

# DTC: P2A00

EN01H16F01030F03001204

## P2A00: NOx sensor ($O_2$ concentration measurement function) (SCR upstream) - Performance

INFORMATION

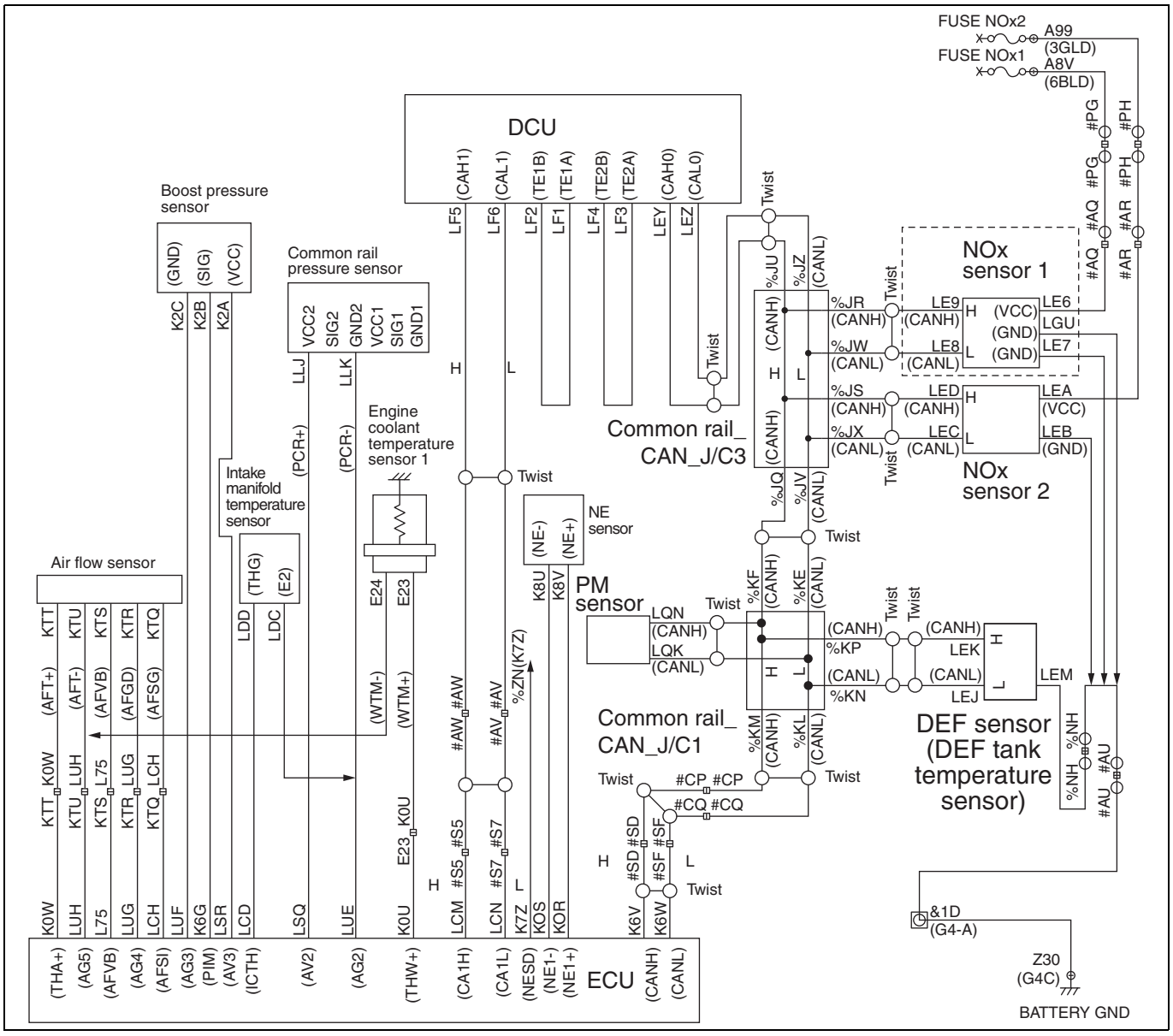


SAPH16F010301444

### 1. Technical description

- The accuracy of the $O_2$ concentration measuring function of the NOx sensor 1 (SCR inlet) can be confirmed by comparing it with a model value calculated by the ECU.
- The $O_2$ model value is calculated from the engine state quantity.

**Description of malfunction**

- Characteristics failure of NOx sensor 1 (SCR upstream) is detected.

**2. DTC set condition**

(1) DTC detection condition

- NOx sensor (SCR upstream) is valid.
- Engine speed range is 500 r/min/sec or less.
- Engine coolant temperature ≥ 60 °C {140 °F}
- Atmospheric pressure is 75 kPa {10.9 psi} or more.
- Exhaust brake and PTO are not in operation.

(2) Judgment criteria

- |Average calculated $O_2$ model value – Average actual $O_2$ sensor value| ≥ 10 %

**3. Reset condition**

- After having restored to the normal conditions.

**4. Indication, warning or system control regulation when the DTC is set.**

- MIL: ON

**5. Symptoms on the vehicle when the DTC is set**

**Symptoms on the vehicle due to backup control (fail safe function)**

- Exhaust gas purification function is declined.

**Symptoms on the vehicle due to malfunction**

- –

**6. Pre-inspection work**

- Check if the battery voltage is in the normal range.

**7. After-inspection work**

- Clear all past DTCs.
- Check if no DTC is stored after test drive.

**8. Estimated failure factors**

- Harness disconnection or short-circuit
- Failure of NOx sensor 1 (SCR upstream)
- Failure of sensor used in calculating model value:
  - Air flow sensor
  - NE sensor
- Increase or decrease of injection quantity according to the deterioration of injector.

## INSPECTION PROCEDURE: P2A00

| 1 | Check the DTC detected [HINO DX II ] |
|---|---|

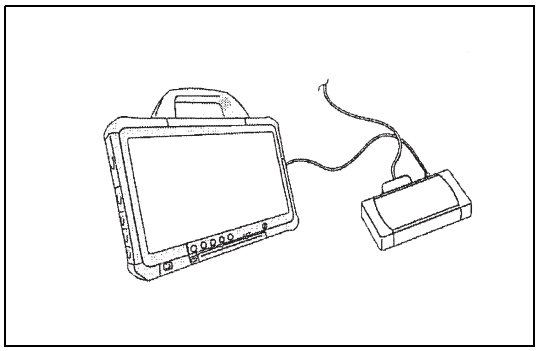

SAPH16F010301445

1. Set the starter switch to the "LOCK" position.
2. Connect the diagnostic system (HINO DX II ) to the vehicle.
3. Set the starter switch to the "ON" position.
4. Select [Engine] on the screen of HINO DX II and check it the DTC (P2A01) other than P2A00 has been detected.

**Has any DTC other than P2A00 been detected?**

**YES**

**Go to diagnosis procedure of the related DTC.**
**After repair, go to step 2.**

**NO**

**Go to step 2.**

| 2 | Inspect the injector |
|---|---|

1. Confirm that the fuel injection quantity is within the standard value.
<test method>
-Refer to P0263, P0266, P0269, P0272, P0275, P0278, P026C or P026D.

**Was any failure found?**

**YES**

**Replace the fault part of injector.**
**After this, go to step 3.**

**NO**

**Go to step 3.**

| 3 | **Inspect the air flow sensor** |
|---|---|

1. Check the installation of the air flow sensor.
2. Make sure there is no dirt, clogging or damage on the sensing part of the air flow sensor.

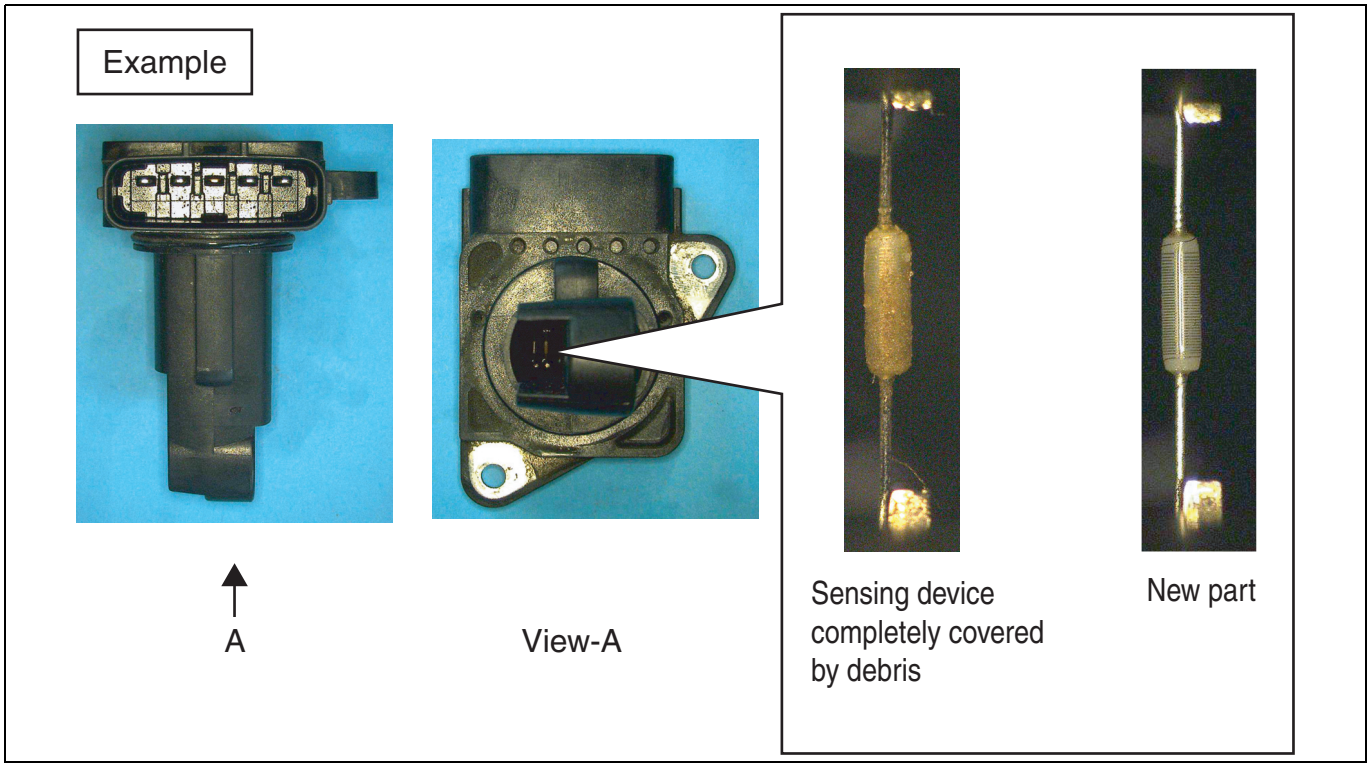


SAPH16F010301446

**Was any failure found?**

**YES**

**Replace the sensor and go to step 4.**

**NO**

**Go to step 4.**

| 4 | Inspect the NOx sensor No.1 (SCR upstream) [HINO DX II ] |
|---|---|

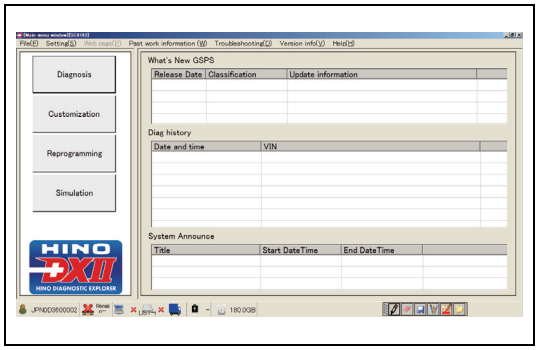


SAPH16F010301447

1. Turn the starter key to the "ON" position.

2. Start DX II .

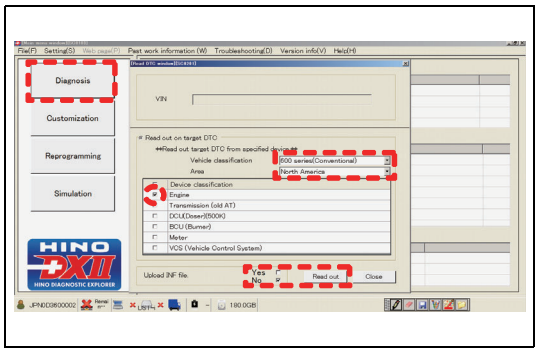


SAPH16F010301448

3. On the DX II window, click [Diagnosis].
   Select the vehicle model and region, and check [Engine].
   Select either Upload INF file and then [Read out] to read out.

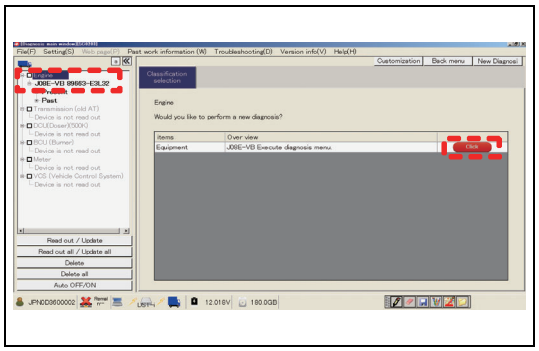


SAPH16F010301449

4. Select [Engine], and press the click button.

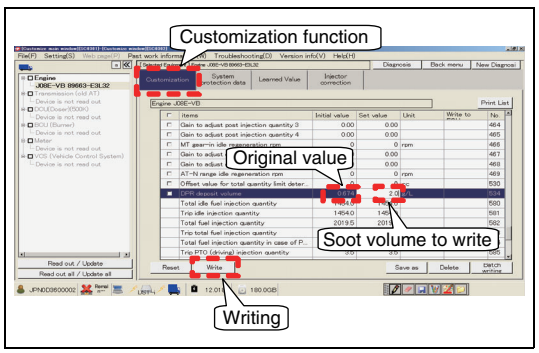


SAPH16F010301450

5. Writing soot volume

**HINT**

**As in the window on the left, write a soot volume [2.0] using the customization function. Record the original value not to forget. The example in the window is [0.674].**

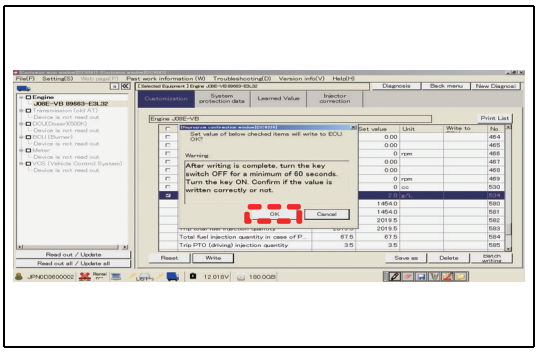


SAPH16F010301451

6. Turn the starter key "OFF" and then "ON" according to the instruction.
Then, click [OK].

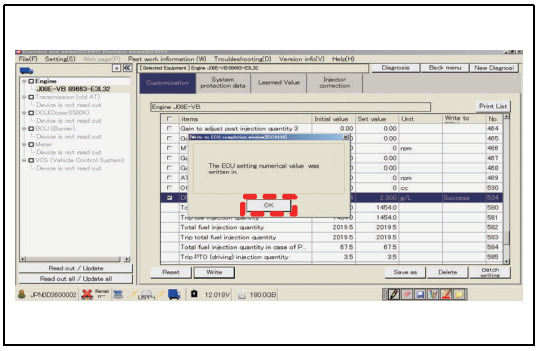


SAPH16F010301452

7. Check that ECU writing has been completed. Click [OK].
Refer to the window on the left.

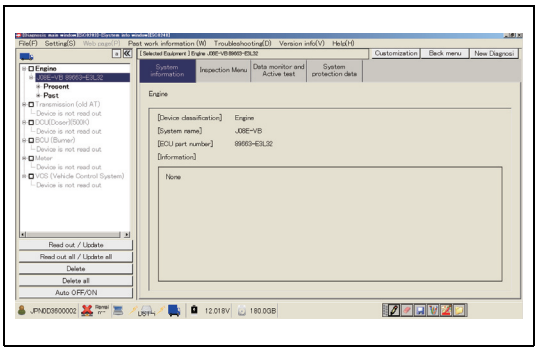

SAPH16F010301453

8. Start monitoring using the data monitoring function of DX II .
Check the output waveform of the NOx sensor on the monitor.

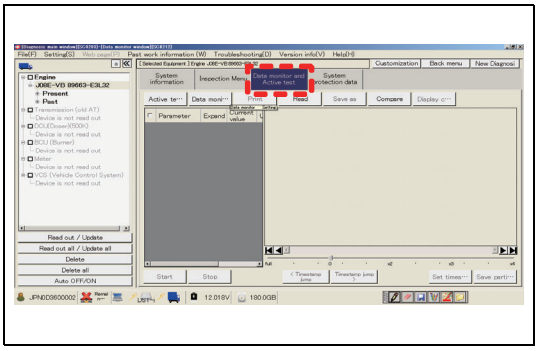

SAPH16F010301454

9. Select [Data monitor and Active test].

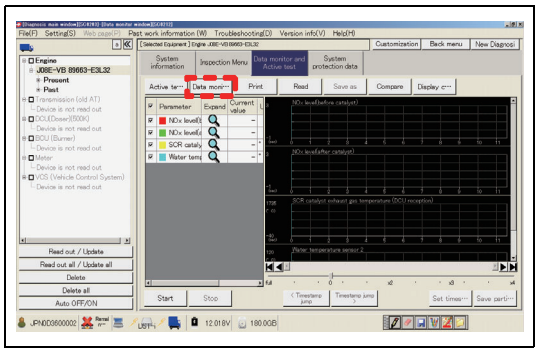

SAPH16F010301455

10. Select [Data monitor Setting].
Refer to the window on the left.

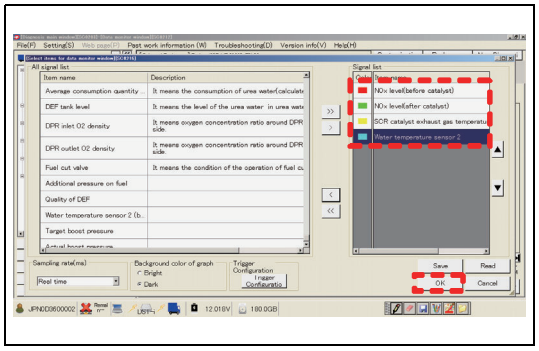

SAPH16F010301456

11. From the selection window on the left, select the following 4 items.
Click OK.

- NOx level (before catalyst)
- NOx level (after catalyst)
- SCR catalyst exhaust gas temperature (DCU reception)
- Water temperature sensor 2

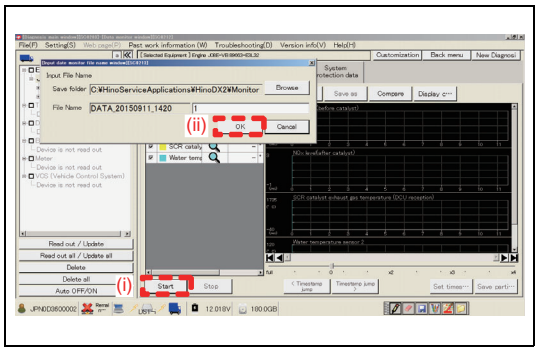


SAPH16F010301457

12. (i) Click [Start] to display the window to check the data storage destination.
(ii) Click [OK] to start data monitoring.

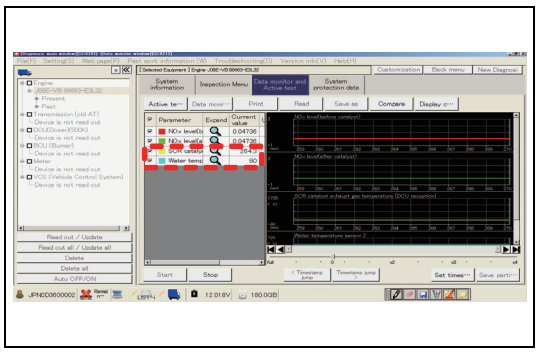

SAPH16F010301458

13. Start the engine.

14. Press the DPR manual regeneration switch of the vehicle.
Start regeneration.

**HINT**

**Since NOx sensor waveform is not detected until the exhaust gas temperature and coolant temperature reach the specified values or more, perform DPR regeneration to increase the exhaust gas temperature and coolant temperature.**

15. On the DX II data monitor, monitor the SCR catalyst temperature, coolant temperature and NOx levels before and after.

16. When the SCR catalyst temperature reaches 250 °C {482 °F} and coolant temperature reaches 70 °C {158 °F}, press the DPR switch (button) to stop the regeneration.

17. Following the determination manual, determine the quality of the sensor according to the NOx sensor waveform data on the monitor.
This is the end of the trouble shooting.

18. Turn the starter key OFF once to stop the engine. Turn it ON again.
19. After completing the trouble shooting, rewrite the soot volume to the original value.
    Select [Engine] as in the window on the left. Click the [Click] button.

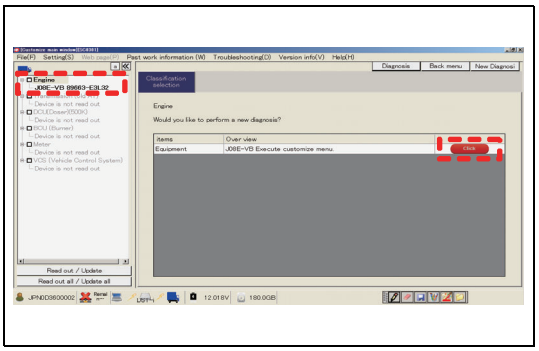

SAPH16F010301459

20. Rewrite the soot volume to the recorded original value.
    Refer to the window on the left.
    For the case of this window, the soot volume to write is [0.6].

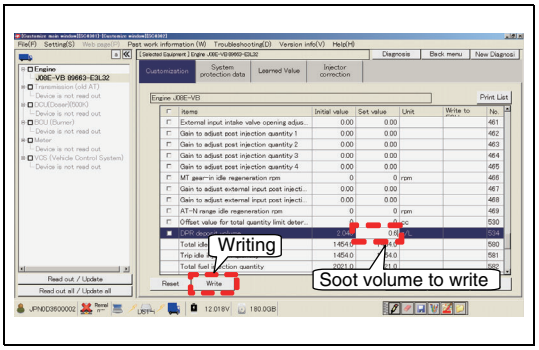


SAPH16F010301460

21. Check that the original soot volume has been written, and click [OK].
    Refer to the window on the left.

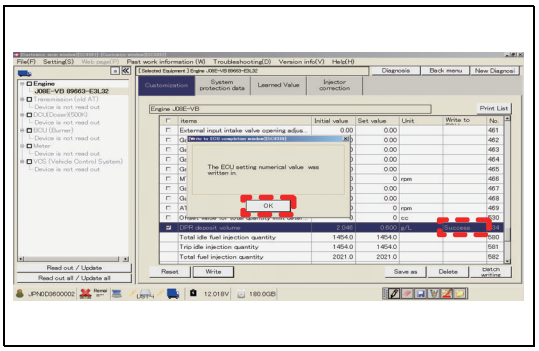

SAPH16F010301461

22. Select [System protection data] to check [Manual regeneration completion frequency]. Click [Reset]. Refer to the window on the left.

**NOTICE**

**Unless this memory reset is performed, the DTC of abnormal regeneration frequency would turn on.**

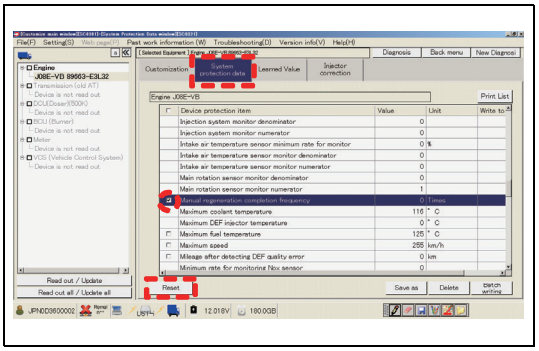

SAPH16F010301462

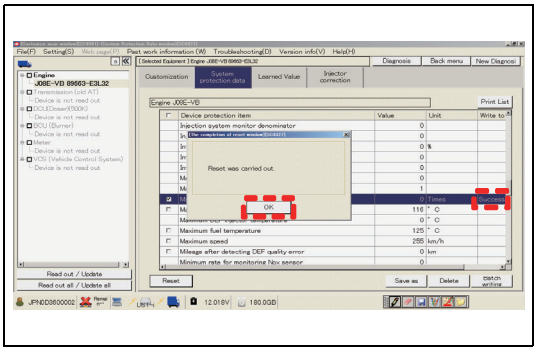


SAPH16F010301463

23. Check that the memory reset has been completed. Click [OK]. Refer to the window on the left.

**Was any failure found?**

**YES**

**Replace the NOx sensor 1 (SCR upstream) Perform "After-inspection work" of INFORMATION section.**

**NO**

**Go to step 5.**

## 5 Check the DTC detected (Engine ECU) [HINO DX II ]

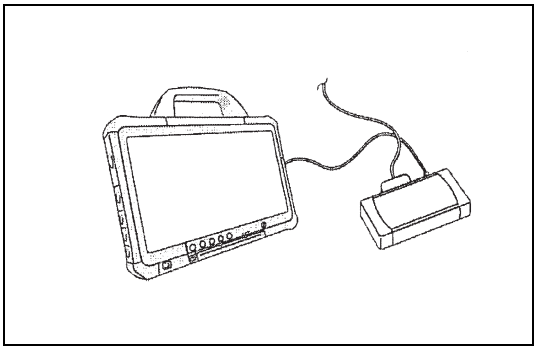

SAPH16F010301464

1. Replace the NOx sensor 1 (SCR upstream) to the new one.
2. Set the starter switch to the "ON" position.
3. Select [Engine] and check if P2A00 has been detected.

**Has DTC P2A00 been detected?**

**YES**

**Replace the engine ECU. Perform "After-inspection work" of INFORMATION section.**

**NO**

**Procedure completed. Perform "After-inspection work" of INFORMATION section.**

# DTC: P2A01

EN01H16F01030F03001205

## P2A01: NOx sensor ($O_2$ concentration measurement function) (SCR downstream) - Performance

INFORMATION

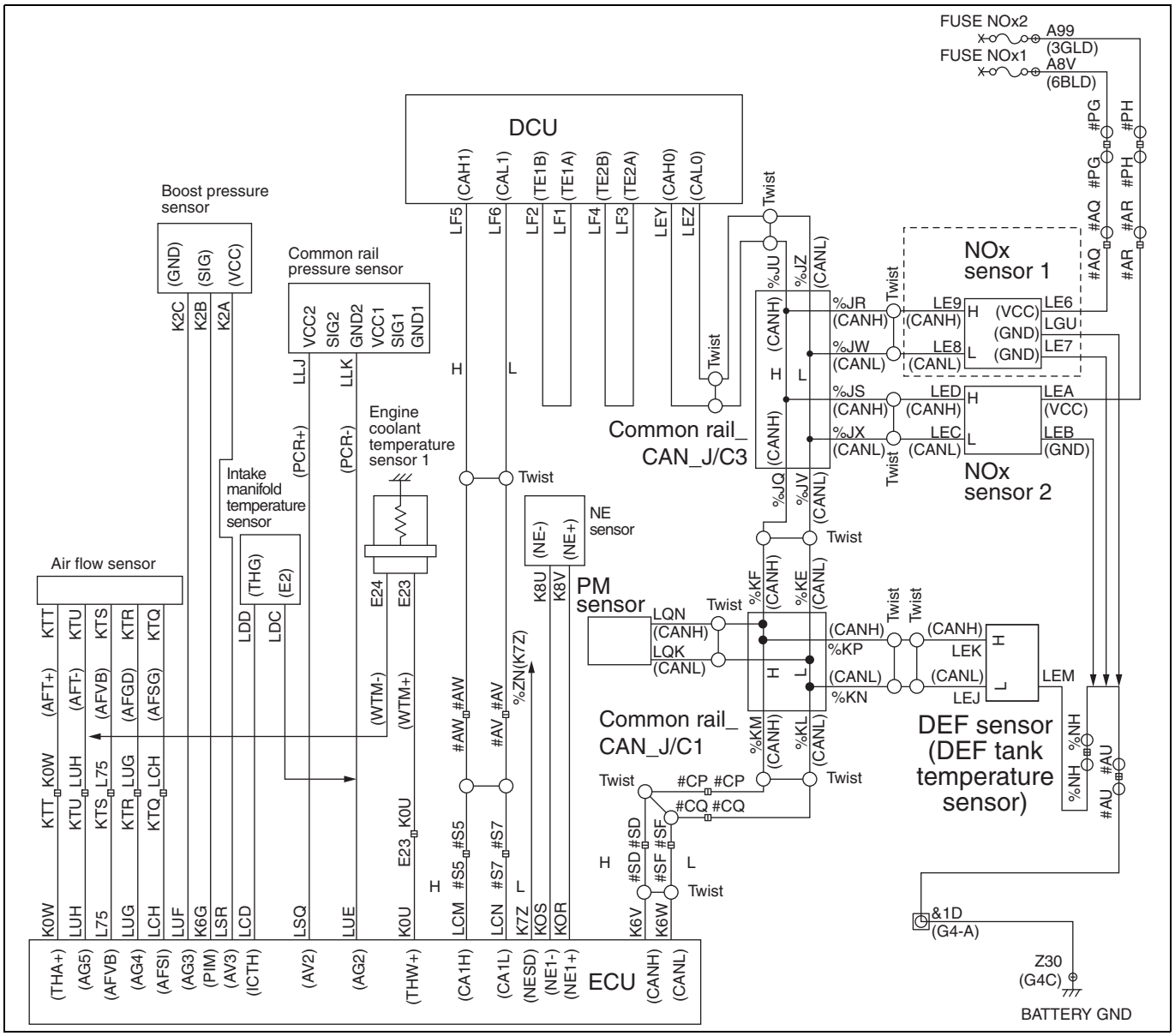


SAPH16F010301465

### 1. Technical description

- The accuracy of the $O_2$ concentration measuring function of the NOx sensor 2 (SCR inlet) can be confirmed by comparing it with a model value calculated by the ECU.
- The $O_2$ model value is calculated from the engine state quantity.

**Description of malfunction**

- Characteristics failure of NOx sensor 1 (SCR downstream) is detected.

**2. DTC set condition**

(1) DTC detection condition

- NOx sensor (SCR downstream) is valid.
- Engine speed range is 500 r/min/sec or less.
- Engine coolant temperature ≥ 60 °C {140 °F}
- Atmospheric pressure is 75 kPa {10.9 psi} or more.
- Exhaust brake and PTO are not in operation.

(2) Judgment criteria

- |Average calculated $O_2$ model value – Average actual $O_2$ sensor value| ≥ 10 %

**3. Reset condition**

- After having restored to the normal conditions.

**4. Indication, warning or system control regulation when the DTC is set.**

- MIL: ON

**5. Symptoms on the vehicle when the DTC is set**

**Symptoms on the vehicle due to backup control (fail safe function)**

- Exhaust gas purification function is declined.

**Symptoms on the vehicle due to malfunction**

- –

**6. Pre-inspection work**

- Check if the battery voltage is in the normal range.

**7. After-inspection work**

- Clear all past DTCs.
- Check if no DTC is stored after test drive.

**8. Estimated failure factors**

- Harness disconnection or short-circuit
- Failure of NOx sensor 2 (SCR downstream)
- Failure of sensor used in calculating model value:
  - Air flow sensor
  - NE sensor
- Increase or decrease of injection quantity according to the deterioration of injector.

## INSPECTION PROCEDURE: P2A01

| 1 | Check the DTC detected [HINO DX II ] |
|---|---|

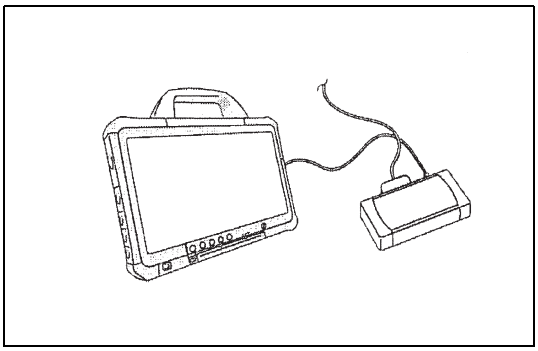

SAPH16F010301466

1. Set the starter switch to the "LOCK" position.
2. Connect the diagnostic system (HINO DX II ) to the vehicle.
3. Set the starter switch to the "ON" position.
4. Select [Engine] on the screen of HINO DX II and check it the DTC (P2A00) other than P2A01 has been detected.

**Has any DTC other than P2A01 been detected?**

**YES**

**Go to diagnosis procedure of the related DTC.**
**After repair, go to step 2.**

**NO**

**Go to step 2.**

| 2 | Inspect the injector |
|---|---|

1. Confirm that the fuel injection quantity is within the standard value.
<test method>
-Refer to P0263, P0266, P0269, P0272, P0275, P0278, P026C or P026D.

**Was any failure found?**

**YES**

**Replace the fault part of injector.**
**After this, go to step 3.**

**NO**

**Go to step 3.**

| 3 | Inspect the air flow sensor |
|---|---|

1. Check the installation of the air flow sensor.
2. Make sure there is no dirt, clogging or damage on the sensing part of the air flow sensor.

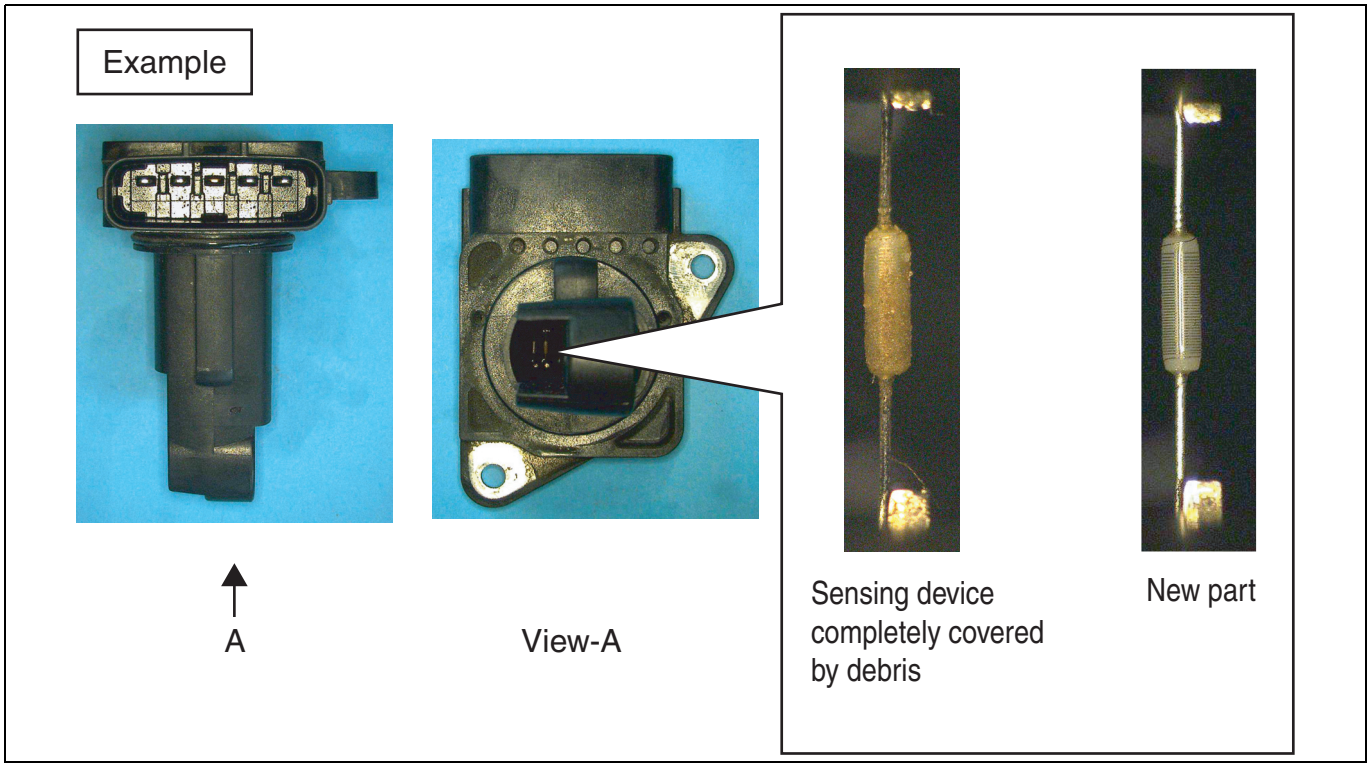


SAPH16F010301467

**Was any failure found?**

**YES**

**Replace the sensor and go to step 4.**

**NO**

**Go to step 4.**

| 4 | Inspect the NOx sensor No.2 (SCR downstream) [HINO DX II ] |
|---|---|

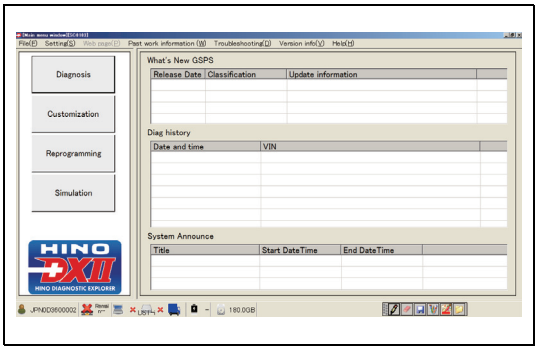


SAPH16F010301468

1. Turn the starter key to the "ON" position.

2. Start DX II .

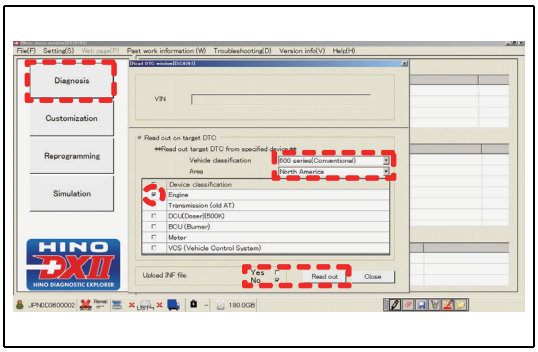


SAPH16F010301469

3. On the DX II window, click [Diagnosis].
   Select the vehicle model and region, and check [Engine].
   Select either Upload INF file and then [Read out] to read out.

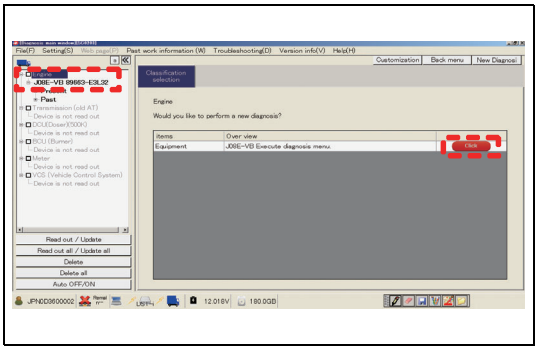


SAPH16F010301470

4. Select [Engine], and press the click button.

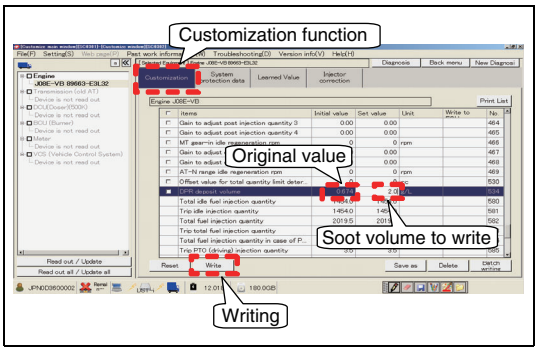


SAPH16F010301471

5. Writing soot volume

**HINT**

**As in the window on the left, write a soot volume [2.0] using the customization function. Record the original value not to forget. The example in the window is [0.674].**

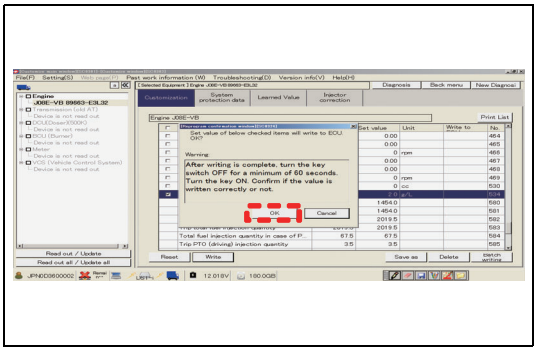


SAPH16F010301472

6. Turn the starter key "OFF" and then "ON" according to the instruction.
Then, click [OK].

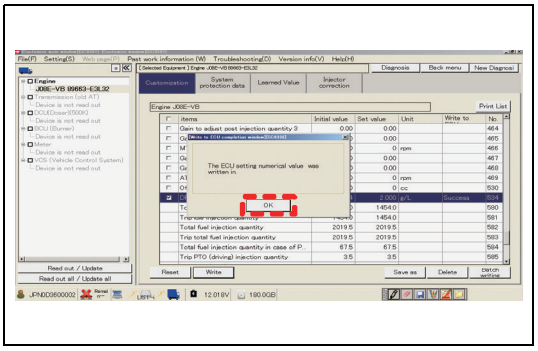


SAPH16F010301473

7. Check that ECU writing has been completed. Click [OK].
Refer to the window on the left.

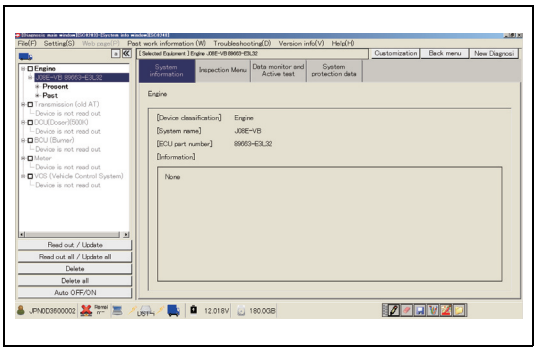

SAPH16F010301474

8. Start monitoring using the data monitoring function of DX II .
Check the output waveform of the NOx sensor on the monitor.

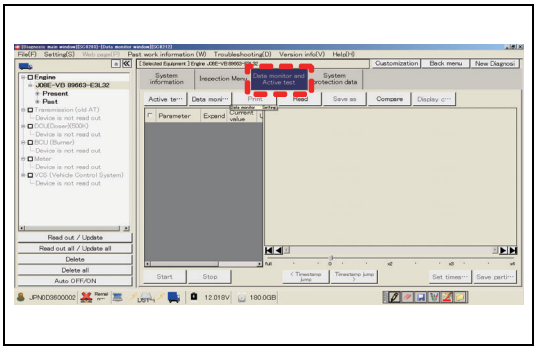

SAPH16F010301475

9. Select [Data monitor and Active test].

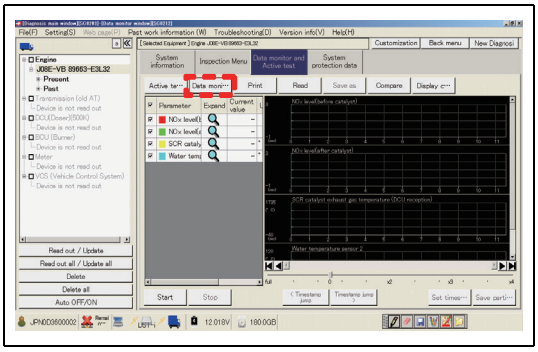

SAPH16F010301476

10. Select [Data monitor Setting].
Refer to the window on the left.

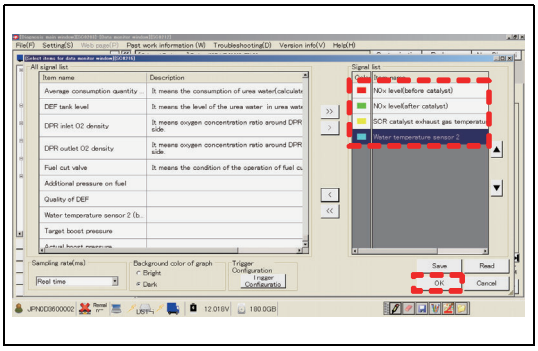

SAPH16F010301477

11. From the selection window on the left, select the following 4 items.
Click OK.

- NOx level (before catalyst)
- NOx level (after catalyst)
- SCR catalyst exhaust gas temperature (DCU reception)
- Water temperature sensor 2

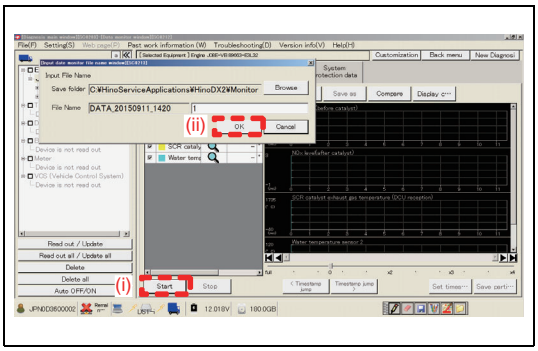


SAPH16F010301478

12. (i) Click [Start] to display the window to check the data storage destination.
(ii) Click [OK] to start data monitoring.

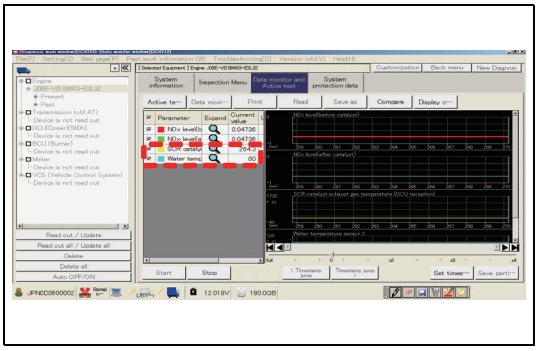

SAPH16F010301479

13. Start the engine.

14. Press the DPR manual regeneration switch of the vehicle.
Start regeneration.

**HINT**

**Since NOx sensor waveform is not detected until the exhaust gas temperature and coolant temperature reach the specified values or more, perform DPR regeneration to increase the exhaust gas temperature and coolant temperature.**

15. On the DX II data monitor, monitor the SCR catalyst temperature, coolant temperature and NOx levels before and after.

16. When the SCR catalyst temperature reaches 250 °C {482 °F} and coolant temperature reaches 70 °C {158 °F}, press the DPR switch (button) to stop the regeneration.

17. Following the determination manual, determine the quality of the sensor according to the NOx sensor waveform data on the monitor.
This is the end of the trouble shooting.

18. Turn the starter key OFF once to stop the engine. Turn it ON again.
19. After completing the trouble shooting, rewrite the soot volume to the original value.
    Select [Engine] as in the window on the left. Click the [Click] button.

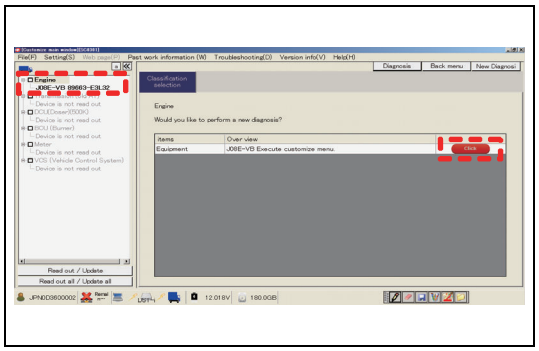

SAPH16F010301480

20. Rewrite the soot volume to the recorded original value.
    Refer to the window on the left.
    For the case of this window, the soot volume to write is [0.6].

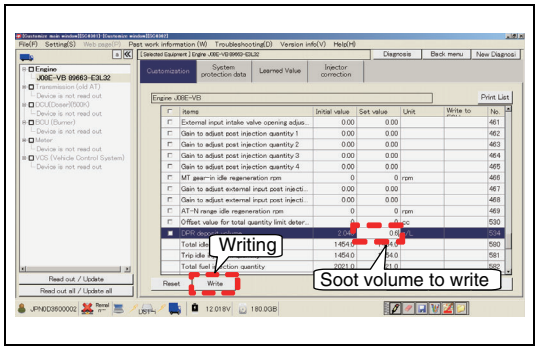


SAPH16F010301481

21. Check that the original soot volume has been written, and click [OK].
    Refer to the window on the left.

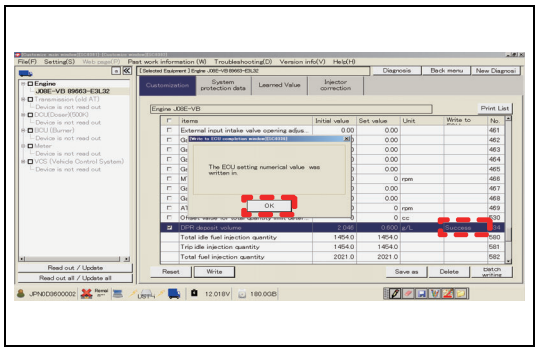

SAPH16F010301482

22. Select [System protection data] to check [Manual regeneration completion frequency]. Click [Reset]. Refer to the window on the left.

**NOTICE**

**Unless this memory reset is performed, the DTC of abnormal regeneration frequency would turn on.**

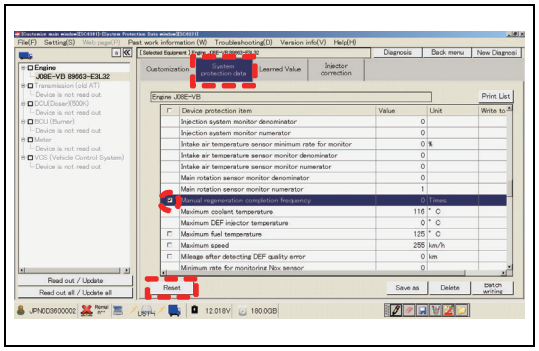

SAPH16F010301483

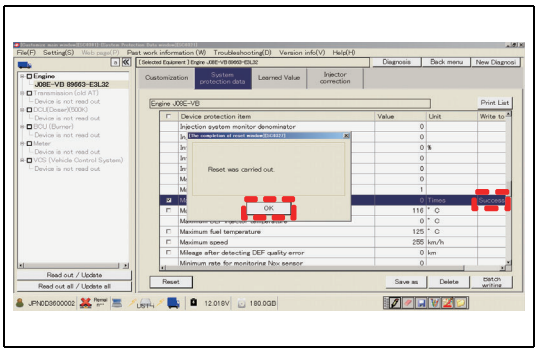


SAPH16F010301484

23. Check that the memory reset has been completed. Click [OK]. Refer to the window on the left.

**Was any failure found?**

**YES**

**Replace the NOx sensor 2 (SCR downstream) Perform "After-inspection work" of INFORMATION section.**

**NO**

**Go to step 5.**

## 5 Check the DTC detected (Engine ECU) [HINO DX II ]

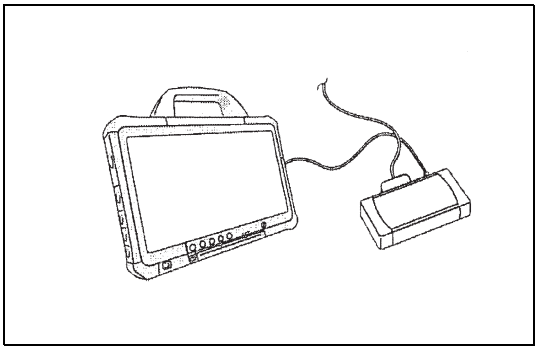

SAPH16F010301485

1. Replace the NOx sensor 2 (SCR downstream) to the new one.
2. Set the starter switch to the "ON" position.
3. Select [Engine] and check if P2A01 has been detected.

**Has DTC P2A01 been detected?**

**YES**

**Replace the engine ECU. Perform "After-inspection work" of INFORMATION section.**

**NO**

**Procedure completed. Perform "After-inspection work" of INFORMATION section.**

# DTC: P2BA9

EN01H16F01030F03001206

## P2BA9: Insufficient Reagent Quality

INFORMATION

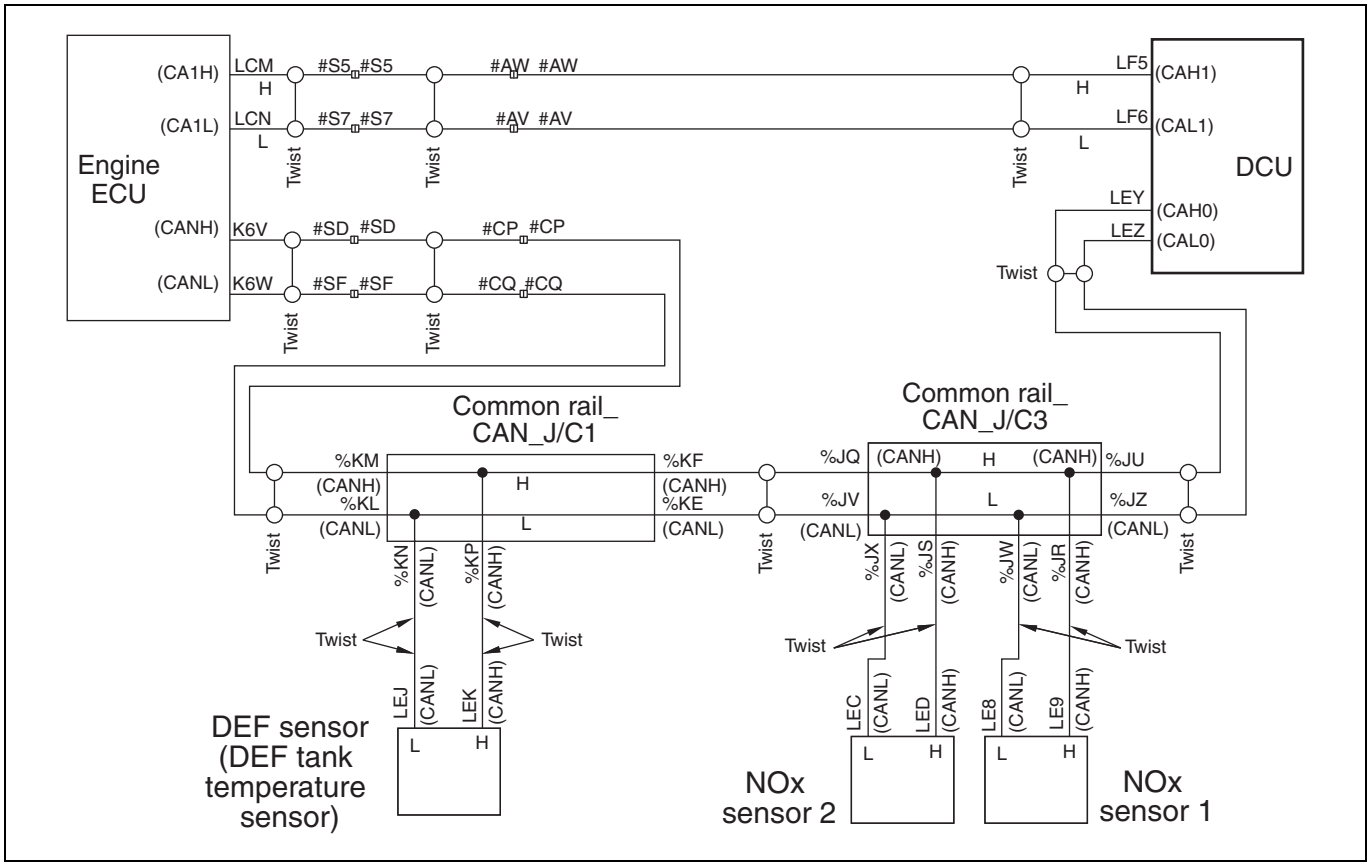


SAPH16F010301486

**1. Technical description**

- Poor DEF quality is determined by the DEF quality sensor, which measures the DEF concentration and determines its quality.

**<Description of malfunction>**

- Poor DEF quality is detected.

**2. DTC set condition**

(1) DTC detection condition

**[Normal conditions]**

**Conditions below continue for 10 seconds:**

- Starter switch ON.
- DEF tank level > 25 %
- DEF tank temperature 1 > -5 °C {23 °F}
- DEF tank temperature 2 > -5 °C {23 °F}
- [DEF tank temperature 1 - temperature 2] < 15 °C {59 °F}
- Difference among exhaust temperature (DOC outlet), coolant temperature, and DEF tank temperature 2 is no greater than 15 °C {59 °F}.
- DEF pump is not operating.
- There is no record of vehicle speed > 2 km/h {1 mph}.
- There is no record of transmission being in any gear other than neutral.
- There is no record of malfunction determination after starter switch has been turned ON.
- Battery voltage > 11 V
- DEF tank sensor is working normally.
- There is no interruption between DEF tank sensor and CAN.

**[After malfunction is detected]**

- DEF has been refilled with the starter switch ON.

(2) Judgment criteria

- The average value of DEF concentration over 10 seconds is below the standard value.

**3. Reset condition**

- After restoration to normal condition.

**4. Indication, warning or system control regulation when the DTC is set.**

- MIL: OFF
- SVS light: OFF (DEF quality malfunction lamp)
- Engine output is restricted.
- Vehicle speed is restricted.

**5. Symptoms on the vehicle when the DTC is set**

**<Symptoms on the vehicle due to backup control (fail safe function)>**

- Engine output is insufficient.
- Vehicle does not speed up.

**<Symptoms on the vehicle due to malfunction>**

- –

**6. Pre-inspection work**

- Check that the battery voltage is in the normal range.

**7. After-inspection work**

- Clear all past DTCs.
- Check that no DTC is detected after test drive.

**8. Estimated failure factors**

- Abnormal DEF concentration
- Dirt or foreign substance inside DEF tank
- DEF quality sensor failure

## INSPECTION PROCEDURE: P2BA9

**1 Inspect the DEF**

1. Check the DEF concentration.

| Standard values |
|---|
| Concentration: 32.5 ± 2.5 % |

**Do the measurements meet the standard value?**

**YES**

**Go to step 2.**

**NO**

**Replace the DEF.**
**If the DEF concentration is below the standard, drain the DEF solution through the tank drain with the starter switch ON, and then refill the tank with at least 5 liters {1.3 gallons} of DEF solution. Afterward, drive the vehicle and confirm that the problem does not recur under driving conditions.**
**Perform "After-inspection work" of INFORMATION section.**

**2 Perform a basic engine check**

1. Perform a basic engine check using the Engine Basic Check sheet.
   Refer to "ENGINE BASIC INSPECTION SHEET (ENGINE INSPECTION CHECK SHEET)".

**Was any failure found?**

**YES**

**Repair or replace faulty parts.**
**Perform "After-inspection work" of INFORMATION section.**

**NO**

**Go to step 3.**

**3 Inspect the DEF tank**

1. Remove the DEF tank from the vehicle.
2. Remove the DEF quality sensor from the DEF tank.
3. Drain the DEF solution from the DEF tank and check the tank interior for the presence of foreign substances.

**Was any failure found?**

**YES**

**Remove the foreign substances and clean the DEF tank interior.**

**⚠ CAUTION**
**Use fresh water or a diluted DEF solution to clean the DEF tank interior.**

**Perform "After-inspection work" of INFORMATION section.**

**NO**

**Go to step 4.**

| 4 | Check the DEF quality sensor |
|---|---|

1. Make sure there is no dirt or damage to the DEF quality sensor.

**Was any failure found?**

**YES**

**Clean the DEF quality sensor.**
**Go to step 4.**

**NO**

**Go to step 5.**

| 5 | Check the DTC detected (Engine ECU) [HINO DX II ] |
|---|---|

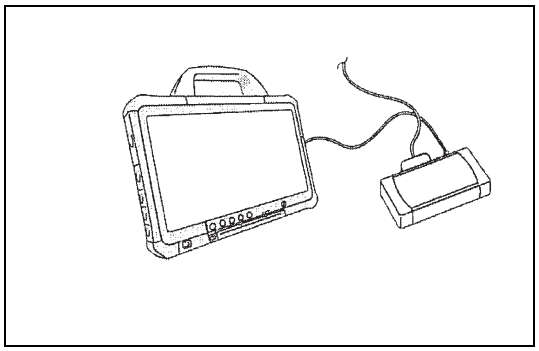

SAPH16F010301487

1. Temporarily install the DEF quality sensor in the DEF tank and mount the tank on the vehicle. (This makes it possible to connect the DEF quality sensor connector.)
2. Fill the tank with the standard concentration of DEF solution.
3. Connect the vehicle to HINO DX II .
4. Set the starter switch to the "ON" position.
5. Select [Engine] and check if DTC P2BA9 has been detected.

**Has DTC P2BA9 been detected?**

**YES**

**Replace the DEF quality sensor.**
**Perform "After-inspection work" of INFORMATION section.**

**NO**

**Procedure completed.**
**Perform "After-inspection work" of INFORMATION section.**

# DTC: U0073

EN01H16F01030F03001207

## U0073: Engine ECU CAN communication bus for Emission control system - bus off

INFORMATION

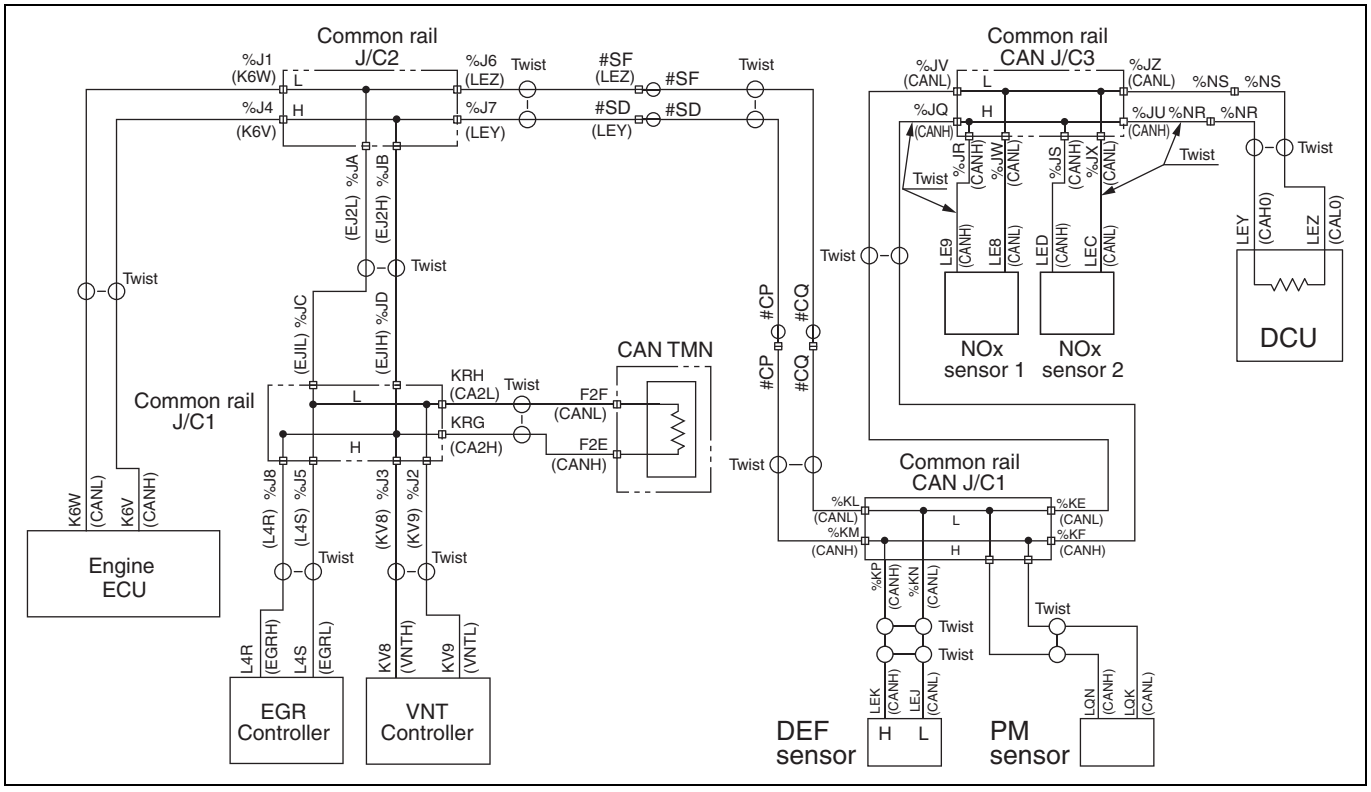


SAPH16F010301488

### 1. Technical description

**<Description of malfunction>**

- Abnormal engine CAN communication (bus off) is detected.

### 2. DTC set condition

(1) DTC detection condition

- Starter switch ON.
- Engine ECU power supply voltage is in the range of 11 V to 16 V.

(2) Judgment criteria

- Buss off condition continues for 96 ms or longer.

### 3. Reset condition

- After normal operation is restored and the starter switch is turned LOCK.

### 4. Indication, warning or system control regulation when the DTC is set.

- MIL: ON
- SVS light: OFF
- Engine output is restricted.

**5. Symptoms on the vehicle when the DTC is set**

**<Symptoms on the vehicle due to backup control (fail safe function)>**

- Engine output is insufficient.

**<Symptoms on the vehicle due to malfunction>**

- –

**6. Pre-inspection work**

- Check that the battery voltage is in the normal range.

**7. After-inspection work**

- Clear all past DTCs.
- Check that no DTC is stored after test drive.

**8. Estimated failure factors**

- CAN communication harness failure (disconnection, short-circuit or terminating resistance)
- Poor connector contact or faulty connector fit
- Failure of unit connected to the engine ECU
- Engine ECU failure

## INSPECTION PROCEDURE: U0073

| 1 | Check the DTC detected (Engine ECU) |
|---|---|

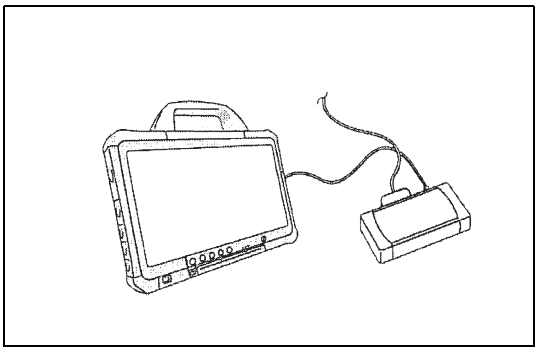

SAPH16F010301489

1. Set the starter switch to the "LOCK" position.
2. Connect the vehicle to HINO DX II .
3. Set the starter switch to the "ON" position.
4. Select [Engine] and check if U0073 has been detected.

**Has DTC U0073 been detected?**

**YES**

**Replace the engine ECU.**

**NOTICE**

**If multiple CAN communication-related DTCs (U ***) are detected, it is considered failure of the main CAN communication line. Refer to "ENGINE CAN COMMINICATION LINE / CAN COMMUNICATION LINE MALFANCTION PART DETERMINATION TABLE" of "CAN chapter" and inspect the diagnosed item of the detected DTC.**

**NO**

**Procedure completed.**
**Perform "After-inspection work" of INFORMATION section.**

# DTC: U010A

EN01H16F01030F03001208

## U010A: Engine ECU CAN communication (EGR valve control)

INFORMATION

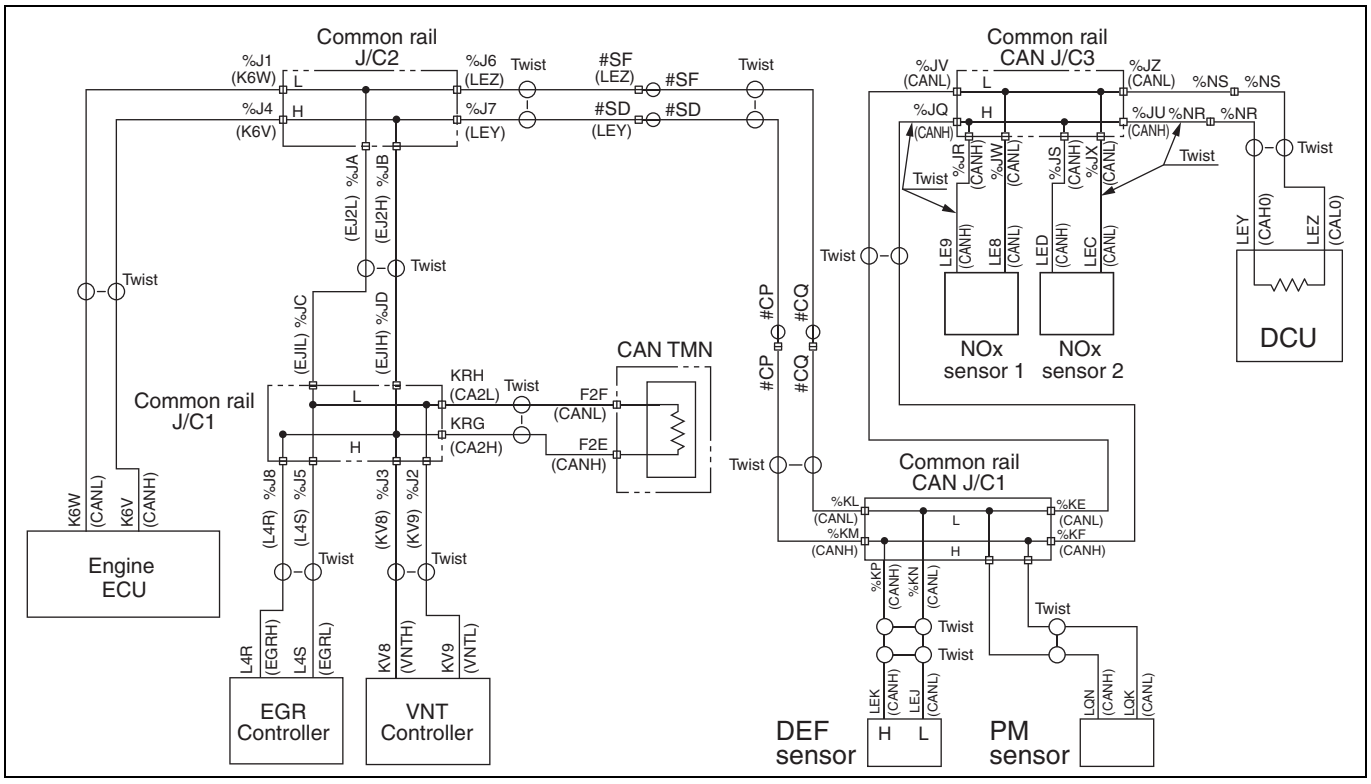


SAPH16F010301490

### 1. Technical description

- –

**<Description of malfunction>**

- CAN communication with EGR control is interrupted.

### 2. DTC set condition

(1) DTC detection condition

- Starter switch is ON.
- Engine ECU power supply voltage is in the range of 11 V to 16 V.

(2) Judgment criteria

- No CAN data is received from EGR controller for at least 3 seconds.

### 3. Reset condition

- After normal operation is restored and the starter switch is turned LOCK.

### 4. Indication, warning or system control regulation when the DTC is set.

- MIL: ON
- SVS light: OFF
- Engine output is restricted.

**5. Symptoms on the vehicle when the DTC is set**

**<Symptoms on the vehicle due to backup control (fail safe function)>**

- Engine output is insufficient.

**<Symptoms on the vehicle due to malfunction>**

- –

**6. Pre-inspection work**

- Check that the battery voltage is in the normal range.

**7. After-inspection work**

- Clear all past DTCs.
- Check that no DTC is stored after test drive.

**8. Estimated failure factors**

- CAN circuit failure (engine CAN)
- EGR controller failure
- Harness disconnection or short-circuit

## INSPECTION PROCEDURE: U010A

Refer to the "ENGINE CAN COMMUNICATION LINE" in the chapter "CAN COMMUNICATION".

# DTC: U010C

EN01H16F01030F03001209

## U010C: VNT actuator CAN communication error

INFORMATION

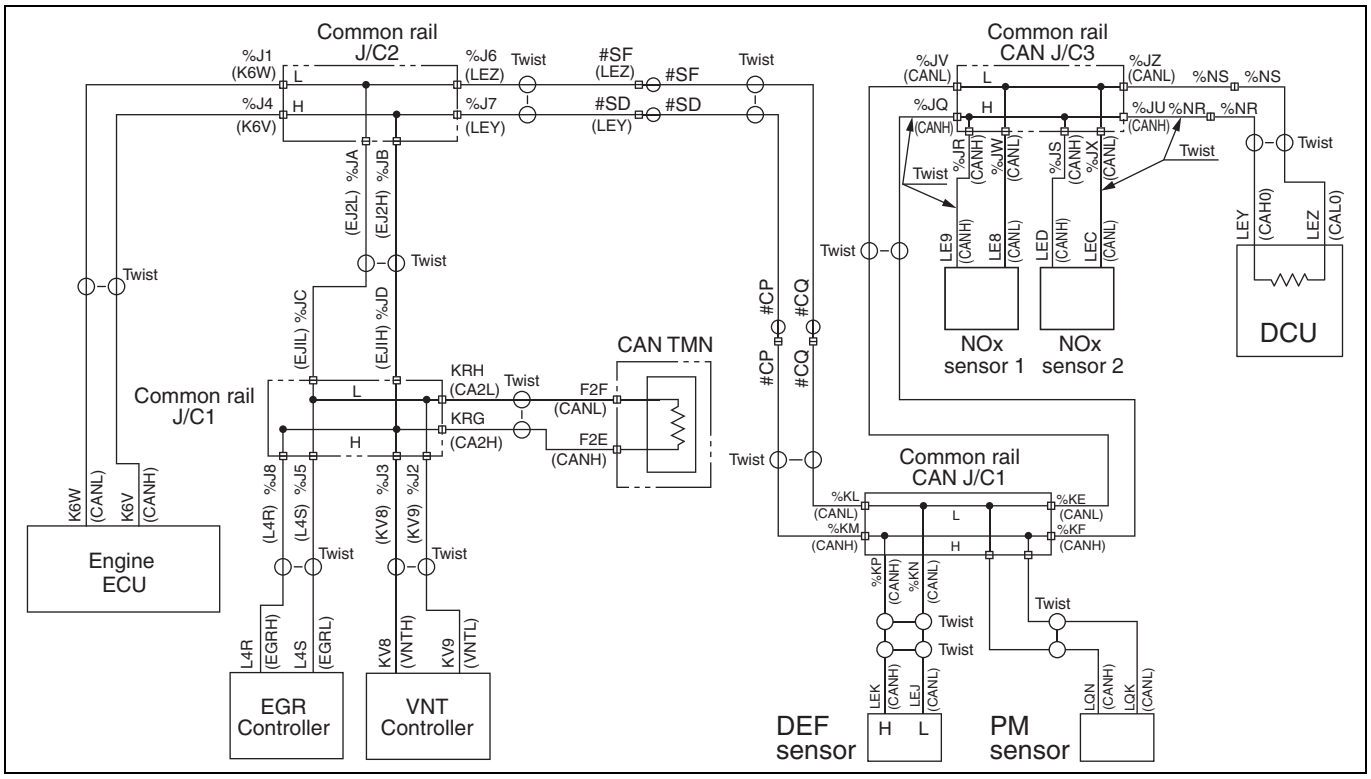


SAPH16F010301491

**1. Technical description**

- –

**<Description of malfunction>**

- CAN communication between the VNT controller and engine ECU is interrupted.

**2. DTC set condition**

(1) DTC detection condition

- Starter switch is ON.
- Engine ECU power supply voltage is in the range of 11 V to 16 V.

(2) Judgment criteria

- When CAN data from the engine ECU cannot be received by the VNT controller for at least 1 second.
- When the CAN data sent from the engine ECU exceeds its range.
- When CAN data from the VNT controller is not received by the engine ECU for at least 3 seconds.

**3. Reset condition**

- After normal operation is restored and the starter switch is turned OFF.

**4. Indication, warning or system control regulation when the DTC is set.**

- MIL: ON
- SVS light: OFF
- Engine output is restricted.

**5. Symptoms on the vehicle when the DTC is set**

**<Symptoms on the vehicle due to backup control (fail safe function)>**

- Engine output is insufficient.

**<Symptoms on the vehicle due to malfunction>**

- –

**6. Pre-inspection work**

- Check that the battery voltage is in the normal range.

**7. After-inspection work**

- Clear all past DTCs.
- Check that no DTC is stored after test drive.

**8. Estimated failure factors**

- CAN circuit failure (engine CAN)
- VNT controller failure
- Harness disconnection or short-circuit

## INSPECTION PROCEDURE: U010C

Refer to the "ENGINE CAN COMMUNICATION LINE" in the chapter "CAN COMMUNICATION".

# DTC: U010E

EN01H16F01030F03001210

## U010E: Engine ECU CAN communication (DeNOx ECU)

INFORMATION

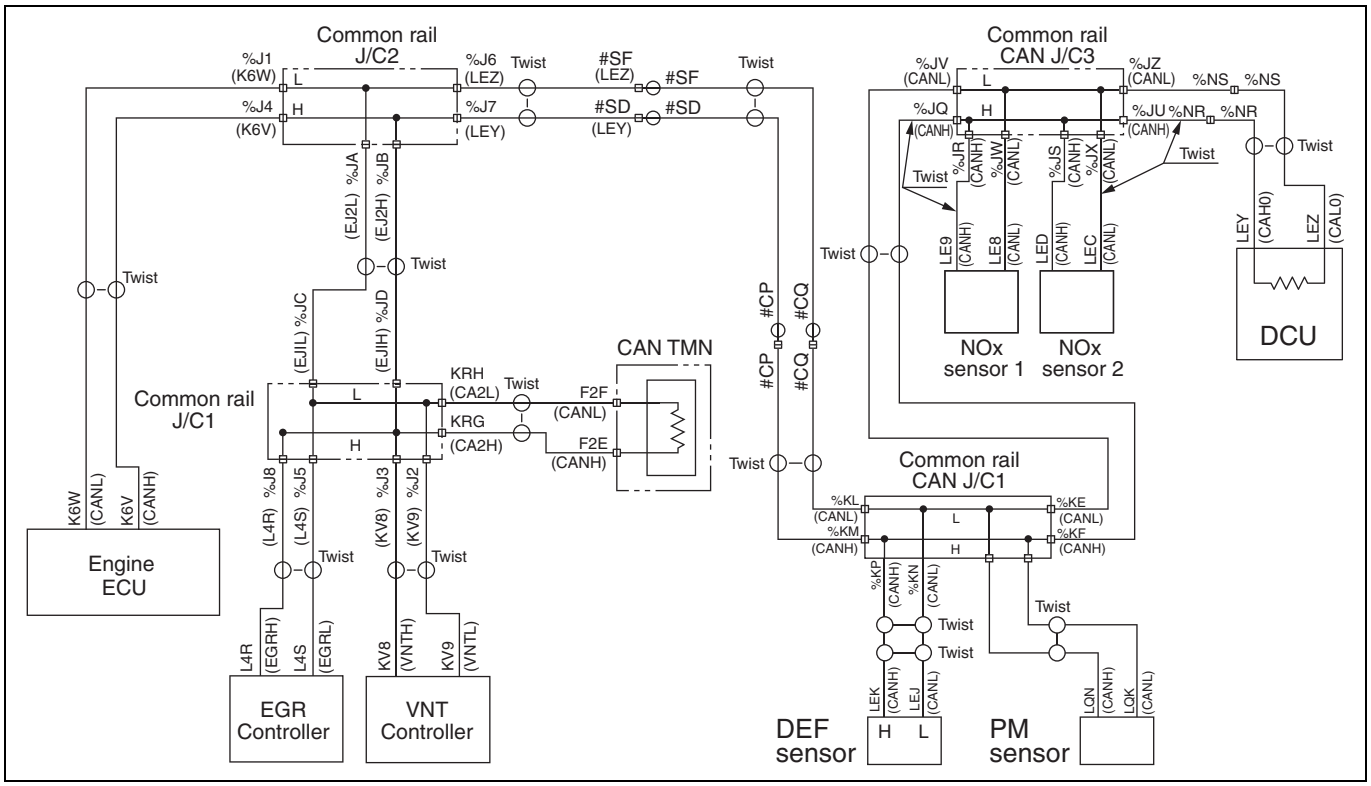


SAPH16F010301492

### 1. Technical description

**<Description of malfunction>**

- CAN communication with DCU is interrupted.

### 2. DTC set condition

(1) DTC detection condition

- Starter switch ON.
- Engine ECU power supply voltage is in the range of 11 V to 16 V.

(2) Judgment criteria

- Disconnection between DCU and CAN bus line is detected for at least 3 seconds.

### 3. Reset condition

- After normal operation is restored and the starter switch is turned OFF.

### 4. Indication, warning or system control regulation when the DTC is set.

- MIL: ON
- SVS light: OFF

**5. Symptoms on the vehicle when the DTC is set**

**<Symptoms on the vehicle due to backup control (fail safe function)>**

- –

**<Symptoms on the vehicle due to malfunction>**

- Several diagnoses are produced because of failure of main CAN communication harness.

**6. Pre-inspection work**

- Check that the battery voltage is in the normal range.

**7. After-inspection work**

- Clear all past DTCs.
- Check that no DTC is stored after test drive.

**8. Estimated failure factors**

- CAN communication harness failure (disconnection, short-circuit, or terminating resistance)
- Poor connector contact or faulty connector fit
- DCU failure
- Engine ECU failure

## INSPECTION PROCEDURE: U010E

Refer to the "ENGINE CAN COMMUNICATION LINE" in the chapter "CAN COMMUNICATION".

# DTC: U029D

EN01H16F01030F03001211

## U029D: Engine ECU CAN communication (NOx sensor (SCR upstream))

INFORMATION

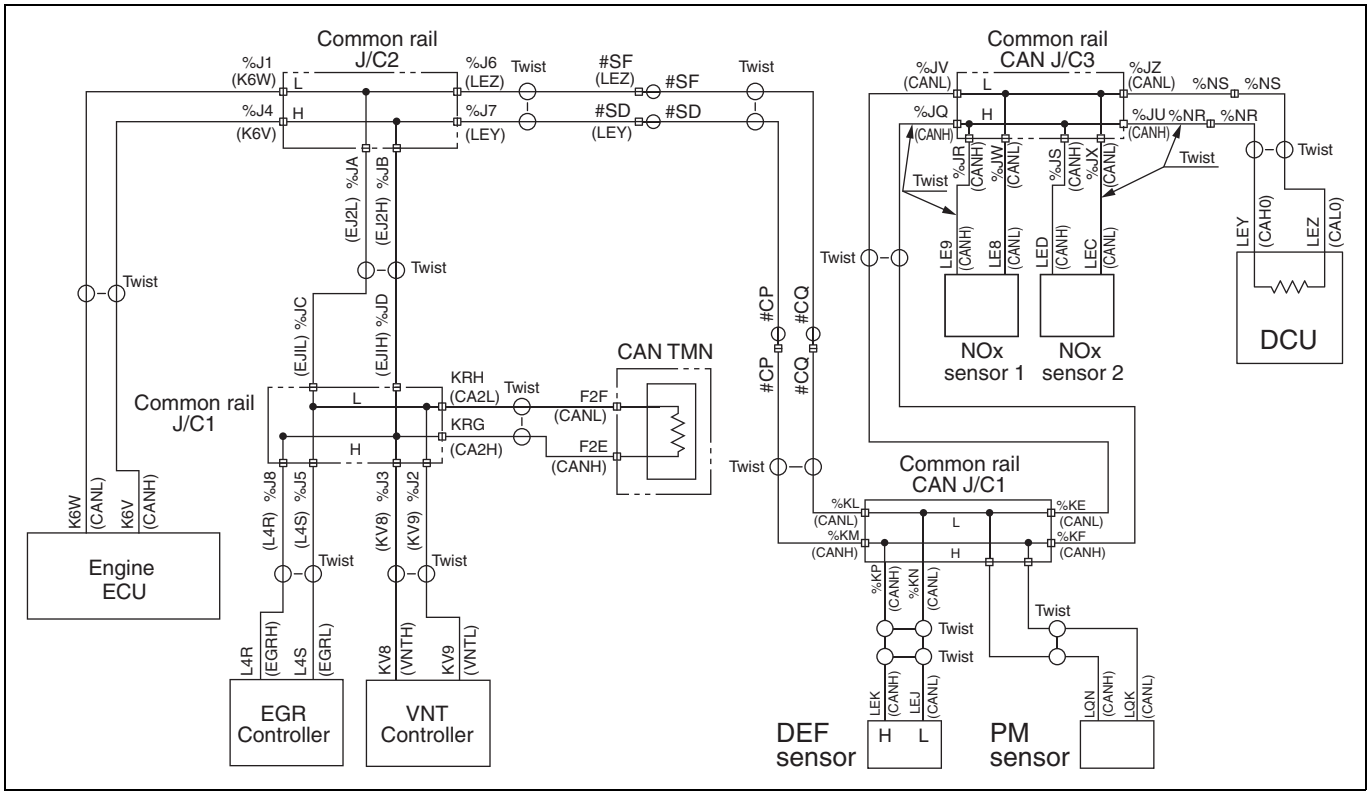


SAPH16F010301493

**1. Technical description**

- The NOx sensor 1 (control part) is responsible for the CAN communication with the DCU.

**<Description of malfunction>**

- CAN communication failure is detected.

**2. DTC set condition**

(1) DTC detection condition

- Starter switch ON.
- Engine ECU power supply voltage is in the range of 11 V to 16 V.

(2) Judgment criteria

- Disconnection between NOx sensor 1 (SCR upstream) and CAN bus line is detected for 3 seconds.

**3. Reset condition**

- Immediately after normal operation is restored.

**4. Indication, warning or system control regulation when the DTC is set.**

- MIL: ON
- SVS light: OFF

**5. Symptoms on the vehicle when the DTC is set**

**<Symptoms on the vehicle due to backup control (fail safe function)>**

- –

**<Symptoms on the vehicle due to malfunction>**

- Multiple DTC are detected because of failure of main CAN communication harness.

**6. Pre-inspection work**

- Check that the battery voltage is in the normal range.

**7. After-inspection work**

- Clear all past DTCs.
- Check that no DTC is stored after test drive.

**8. Estimated failure factors**

- CAN circuit failure (engine CAN)
- NOx sensor 1 (control part) failure
- Harness disconnection or short-circuit
- Controller power supply system failure

## INSPECTION PROCEDURE: U029D

Refer to the "ENGINE CAN COMMUNICATION LINE" in the chapter "CAN COMMUNICATION".

# DTC: U029E

EN01H16F01030F03001212

## U029E: Engine ECU CAN communication (NOx sensor (SCR downstream))

INFORMATION

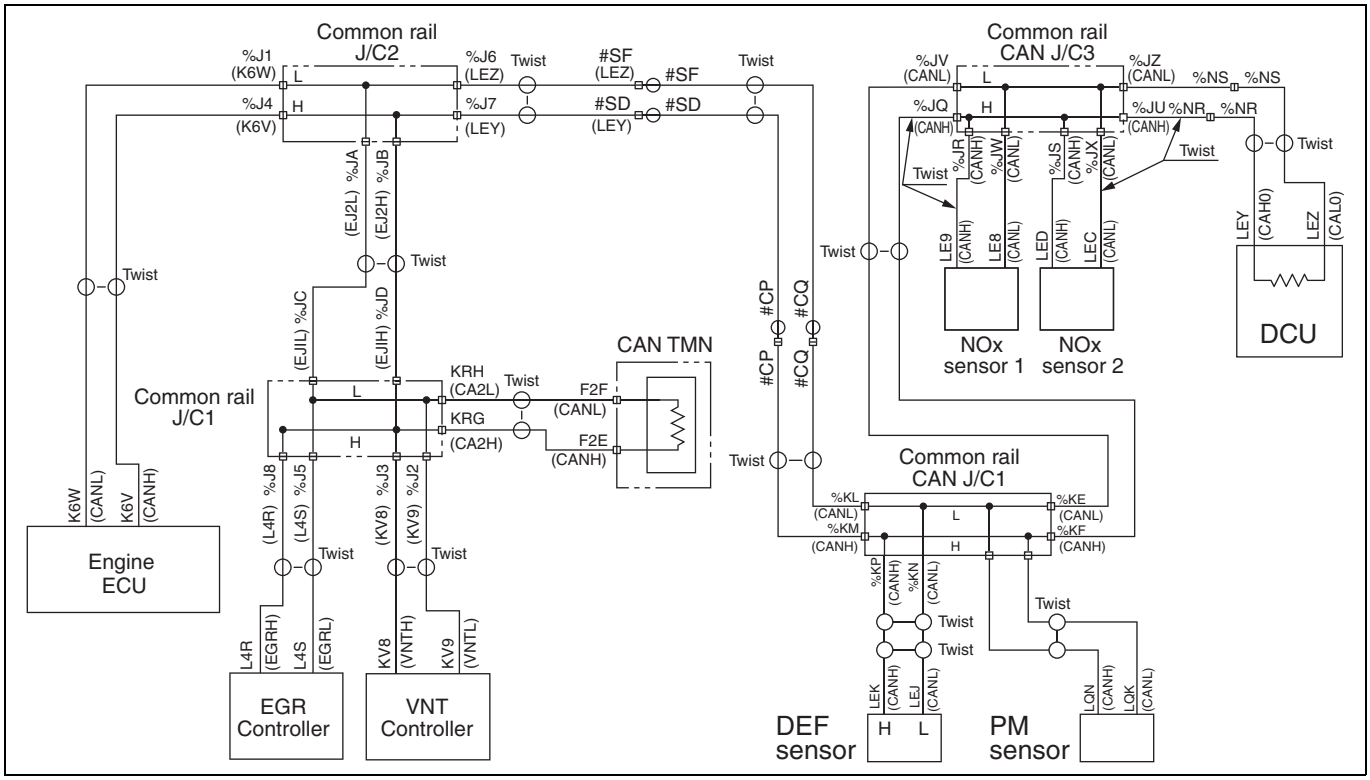


SAPH16F010301494

**1. Technical description**

- NOx sensor 2 (control part) is connected via the DCU and CAN communication.

**<Description of malfunction>**

- CAN communication failure is detected.

**2. DTC set condition**

(1) DTC detection condition

- Starter switch ON.
- Engine ECU power supply voltage is in the range of 11 V to 16 V.

(2) Judgment criteria

- Disconnection between NOx sensor 2 (SCR downstream) and CAN bus line is detected for 3 seconds.

**3. Reset condition**

- Immediately after normal operation is restored.

**4. Indication, warning or system control regulation when the DTC is set.**

- MIL: ON
- SVS light: OFF

**5. Symptoms on the vehicle when the DTC is set**

**<Symptoms on the vehicle due to backup control (fail safe function)>**

- –

**<Symptoms on the vehicle due to malfunction>**

- Multiple DTC are detected because of failure of main CAN communication harness.

**6. Pre-inspection work**

- Check that the battery voltage is in the normal range.

**7. After-inspection work**

- Clear all past DTCs.
- Check that no DTC is stored after test drive.

**8. Estimated failure factors**

- CAN circuit failure (engine CAN)
- NOx sensor 2 (control part) failure
- Harness disconnection or short-circuit
- Controller power supply system failure

## INSPECTION PROCEDURE: U029E

Refer to the "ENGINE CAN COMMUNICATION LINE" in the chapter "CAN COMMUNICATION".

# DTC: U02A2

EN01H16F01030F03001213

## U02A2: Engine ECU CAN communication (DEF tank sensor)

INFORMATION

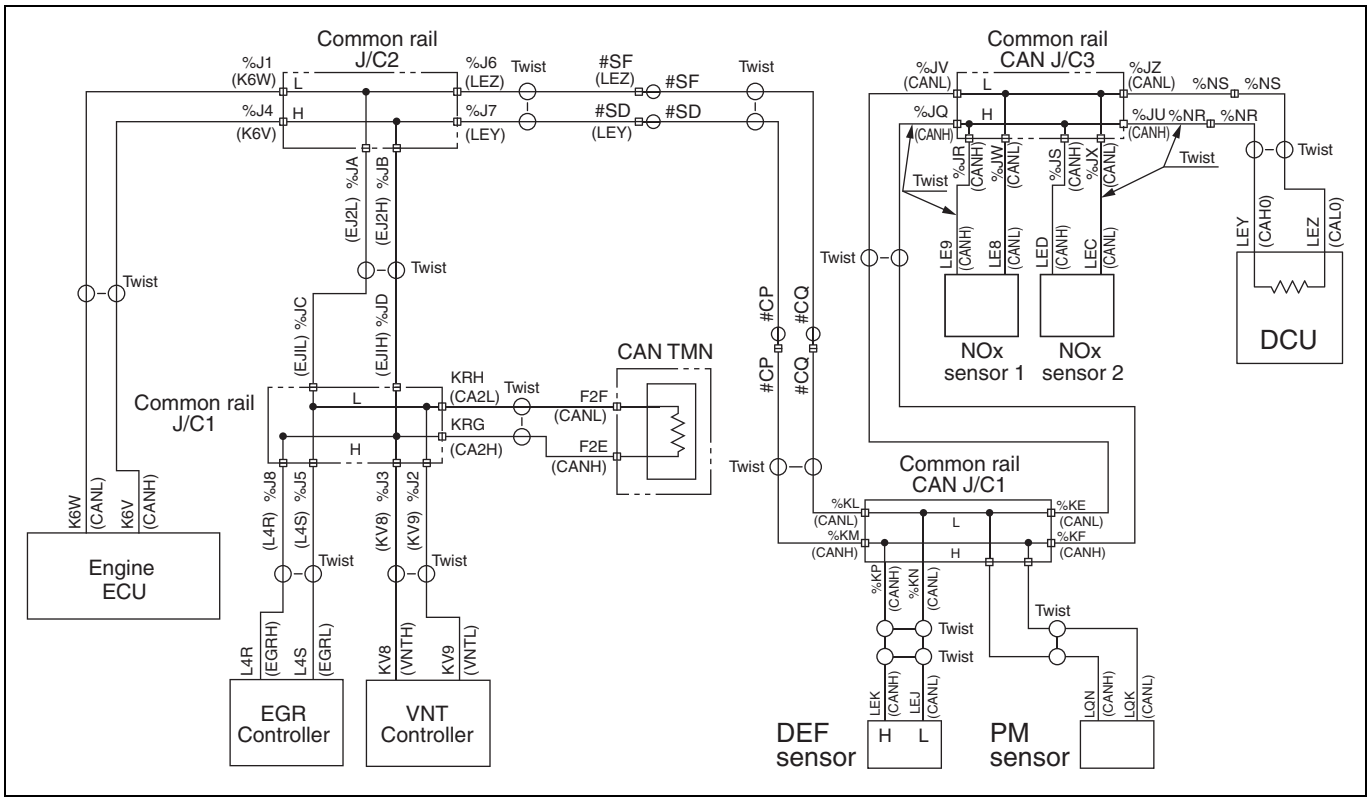


SAPH16F010301495

**1. Technical description**

- –

**<Description of malfunction>**

- CAN communication with DEF sensor is interrupted.

**2. DTC set condition**

(1) DTC detection condition

- The starter switch is ON.
- Engine ECU power supply voltage is 11 V – 16 V.

(2) Judgment criteria

- No CAN data is received from DEF sensor for at least 30 seconds.

**3. Reset condition**

- After normal operation is restored and the starter switch is turned LOCK.

**4. Indication, warning or system control regulation when the DTC is set.**

- MIL: ON
- SVS light: OFF

**5. Symptoms on the vehicle when the DTC is set**

**<Symptoms on the vehicle due to backup control (fail safe function)>**

- –

**<Symptoms on the vehicle due to malfunction>**

- –

**6. Pre-inspection work**

- Check that the battery voltage is in the normal range.

**7. After-inspection work**

- Clear all past DTCs.
- Check that no DTC is stored after test drive.

**8. Estimated failure factors**

- CAN circuit failure (engine CAN)
- DEF sensor failure
- DEF sensor power supply/GND harness disconnection or short-circuit

## INSPECTION PROCEDURE: U02A2

Refer to the "ENGINE CAN COMMUNICATION LINE" in the chapter "CAN COMMUNICATION".

# DTC: U02A3

EN01H16F01030F03001214

## U02A3: Engine ECU CAN communication bus for PM sensor - bus off (2 digit diagnosis code 03)

INFORMATION

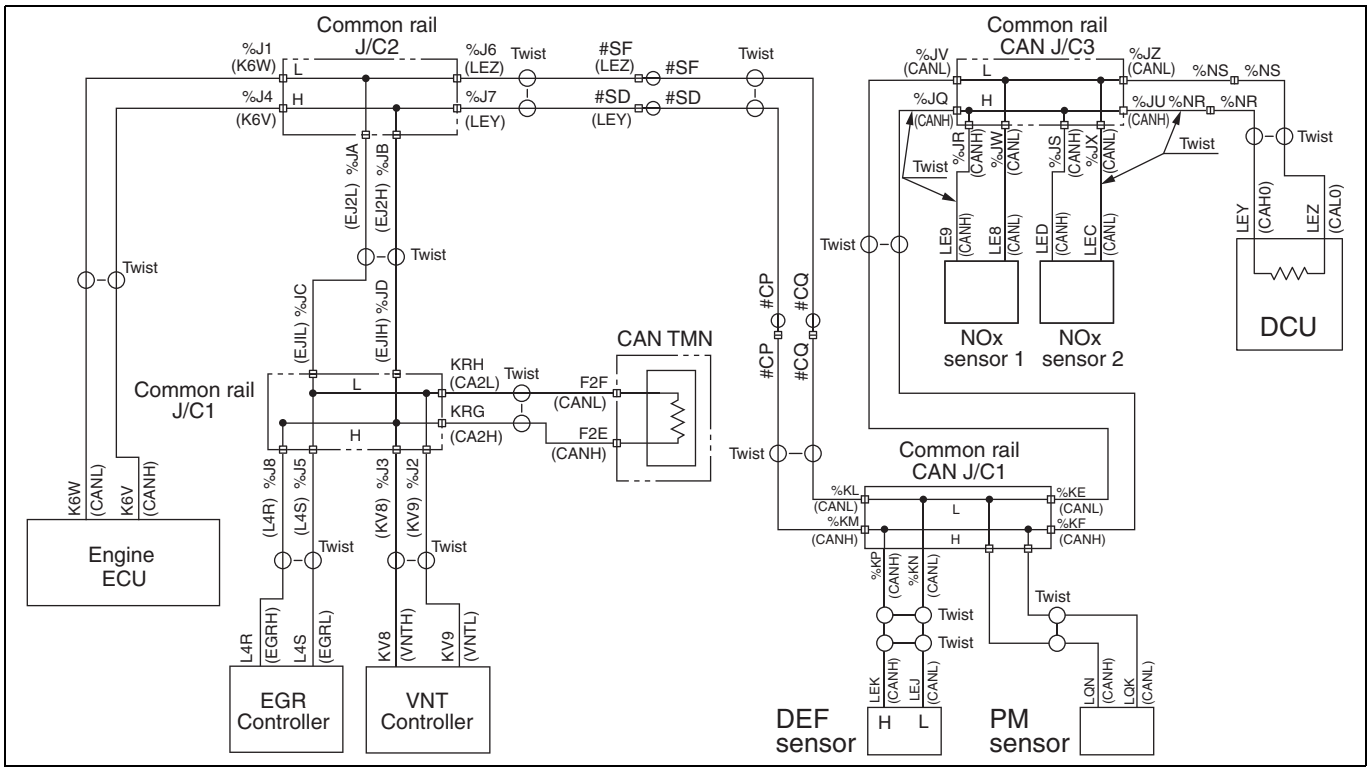


**1. Technical description**

- Abnormality of power supply voltage for the PM sensor is detected from the self-diagnosis function of the PM sensor.

**<Description of malfunction>**

- Failure of the PM sensor is detected.

**2. DTC set condition**

(1) DTC detection condition

- PM sensor is active.
- Battery power supply voltage is in the range of 10 V to 16 V.
- Starter switch remains ON (does not active for starter) for more than 5 seconds.

(2) Judgment criteria

- Abnormal is detected by the buss off condition from PM sensor.

**3. Reset condition**

- After normal operation is restored.

**4. Indication, warning or system control regulation when the DTC is set.**

- MIL: ON

**5. Symptoms on the vehicle when the DTC is set**

**<Symptoms on the vehicle due to backup control (fail safe function)>**

- Overlooking of the DPF damage

**<Symptoms on the vehicle due to malfunction>**

- –

**6. Pre-inspection work**

- Check that the battery voltage is in the normal range.

**7. After-inspection work**

- Clear all past DTCs.
- Check that no DTC is stored after test drive.

**8. Estimated failure factors**

- Failure of the PM sensor controller
- Failure of the CAN communication circuit (vehicle CAN circuit)
- Harness failure (disconnection or short-circuit)

## INSPECTION PROCEDURE: U02A3 (2 digit diagnosis code 03)

| 1 | Check the DTC detected (Engine ECU) [HINO DX II ] |
|---|---|

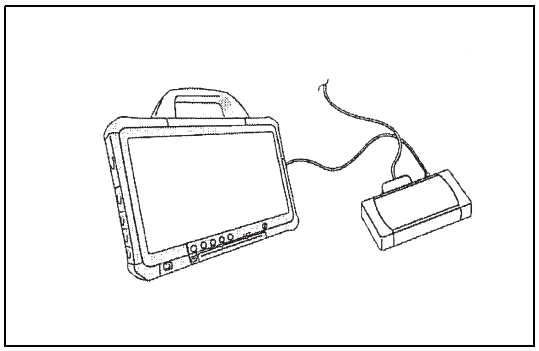

SAPH16F010301497

1. Set the starter switch to the "LOCK" position.
2. Connect the vehicle to HINO DX II .
3. Set the starter switch to the "ON" position.
4. Select [Engine] and check if U02A3 has been detected.

**Has DTC U02A3 been detected?**

**YES**

**Check the CAN communication line.**
**NOTICE**
**If multiple CAN communication-related DTCs (U ***) are detected, it is considered failure of the main CAN communication line. Refer to "ENGINE CAN COMMINICATION LINE / CAN COMMUNICATION LINE MALFANCTION PART DETERMINATION TABLE" of "CAN chapter" and inspect the diagnosed item of the detected DTC.**

**NO**

**Procedure completed.**
**Perform "After-inspection work" of INFORMATION section.**

# DTC: U0301

EN01H16F01030F03001215

## U0301: Software Incompatibility With DeNOx ECU

INFORMATION

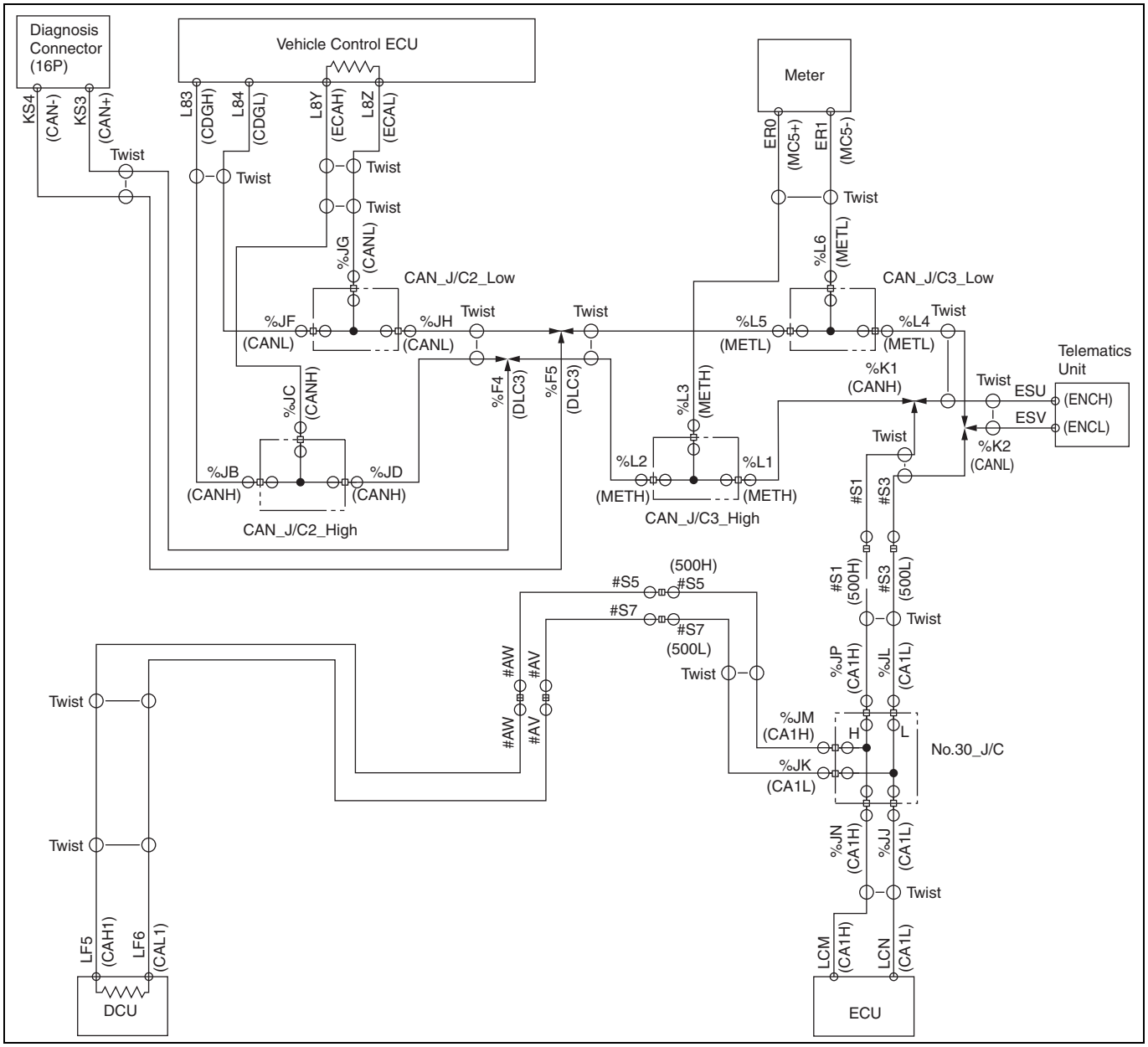


SAPH16F010301498

**1. Technical description**

- The suitable data set is selected in the DCU depending on the data set number transmitted from the engine ECU via CAN.
- The DCU receives the data set number and checked if it matches the transmitted data set number.

**<Description of malfunction>**

- –

**2. DTC set condition**

(1) DTC detection condition

- Starter switch ON.

(2) Judgment criteria

- Transmitted data set No. ≠ received data set No.

**3. Reset condition**

- –

**4. Indication, warning or system control regulation when the DTC is set.**

- –

**5. Symptoms on the vehicle when the DTC is set**

**<Symptoms on the vehicle due to backup control (fail safe function)>**

- –

**<Symptoms on the vehicle due to malfunction>**

- –

**6. Pre-inspection work**

- Check that the battery voltage is in the normal range.

**7. After-inspection work**

- Clear all past DTCs.
- Check that no DTC is stored after test drive.

**8. Estimated failure factors**

- DCU malfunction

## INSPECTION PROCEDURE: U0301

| 1 | Inspect the DCU [HINO DX II ] |
|---|---|

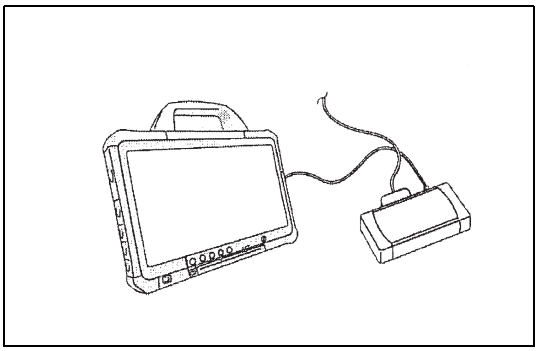

SAPH16F010301499

1. Set the starter switch to the "LOCK" position.
2. Wait 1 minute and then set the starter switch to the "ON" position.
3. Erase the trouble history using HINO DX II .
4. Select [Engine] and check if U0301 has been detected.

**Has DTC U0301 been detected?**

**YES**

**Replace the DCU.**

**NOTICE**

**If multiple CAN communication-related DTCs (U ***) are detected, it is considered failure of the main CAN communication line. Refer to "ENGINE CAN COMMINICATION LINE / CAN COMMUNICATION LINE MALFANCTION PART DETERMINATION TABLE" and "DIAGNOSIS CAN COMMINICATION LINE / CAN COMMUNICATION LINE MALFANCTION PART DETERMINATION TABLE" of CAN chapter, and inspect the diagnosed item of the detected DTC.**

**NO**

**Procedure completed.**

**If DTC U0301 is not displayed again, existing conditions are okay.**

**Perform "After-inspection work" of INFORMATION section.**

# DTC: U1001

EN01H16F01030F03001216

## U1001: Engine ECU CAN communication bus for Vehicle control - bus off

INFORMATION

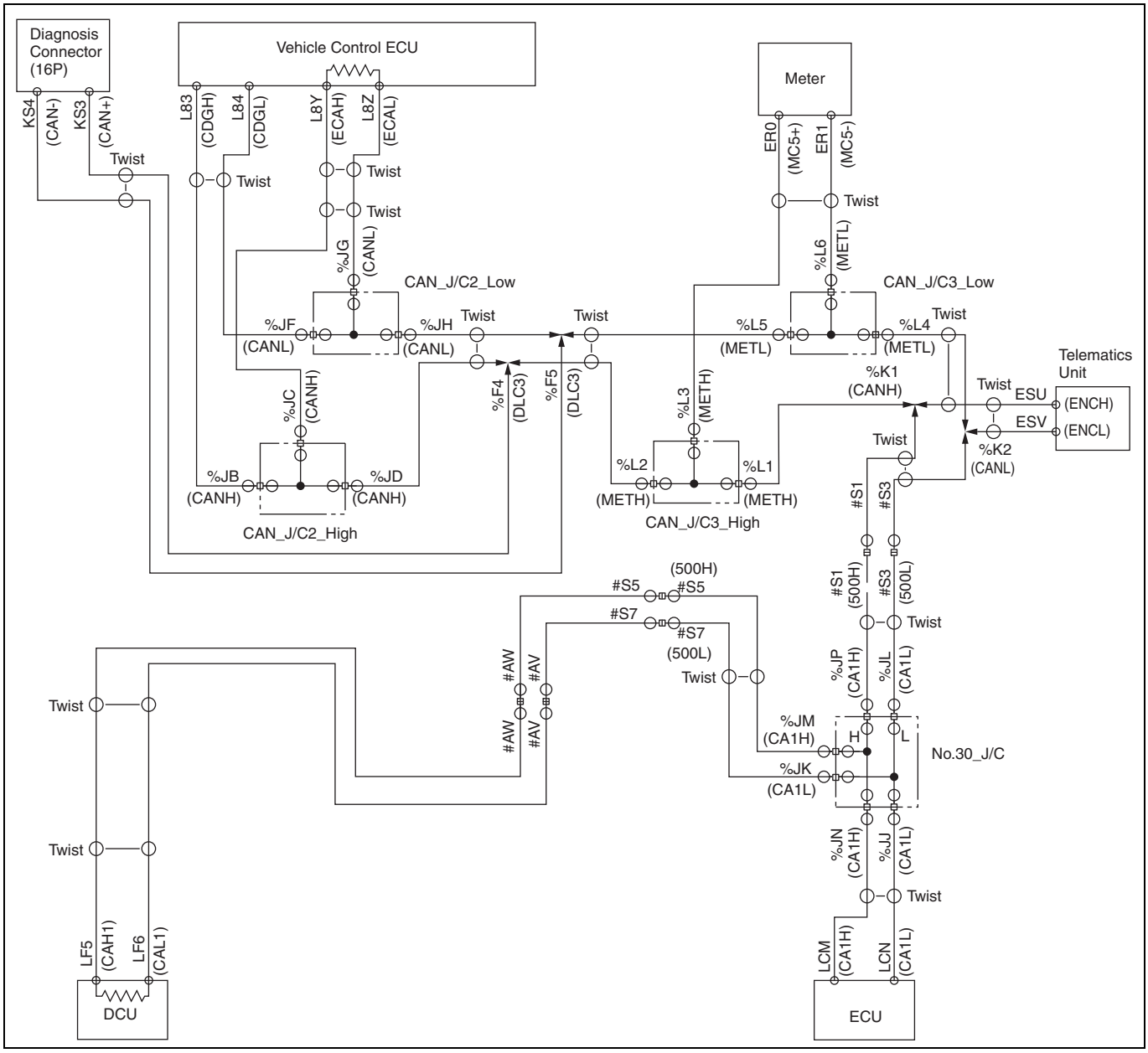


SAPH16F010301500

### 1. Technical description

- –

**<Description of malfunction>**

- Abnormal vehicle CAN communication is detected.

### 2. DTC set condition

(1) DTC detection condition

- Starter switch ON.
- Engine ECU power supply voltage is in the range of 11 V to 16 V.

(2) Judgment criteria

- Buss off condition continues for 96 ms or longer.

**3. Reset condition**

- Immediately after normal operation is restored.

**4. Indication, warning or system control regulation when the DTC is set.**

- MIL: ON
- SVS light: OFF
- Idling stop system is not available.
- Cruise control function is not available.
- Auxiliary brake function is not available.

**5. Symptoms on the vehicle when the DTC is set**

**<Symptoms on the vehicle due to backup control (fail safe function)>**

- Idling stop system does not work.
- Cruise control does not work.
- Auxiliary brake does not work.

**<Symptoms on the vehicle due to malfunction>**

- –

**6. Pre-inspection work**

- Check that the battery voltage is in the normal range.

**7. After-inspection work**

- Clear all past DTCs.
- Check that no DTC is stored after test drive.

**8. Estimated failure factors**

- CAN circuit failure (vehicle CAN)
- Vehicle control ECU failure
- Harness disconnection or short-circuit

## INSPECTION PROCEDURE: U1001

Refer to the "DIAGNOSIS CAN COMMUNICATION LINE" in the chapter "CAN COMMUNICATION".

# DTC: U110A

EN01H16F01030F03001217

## U110A: Engine ECU CAN communication (Vehicle ECU)

INFORMATION

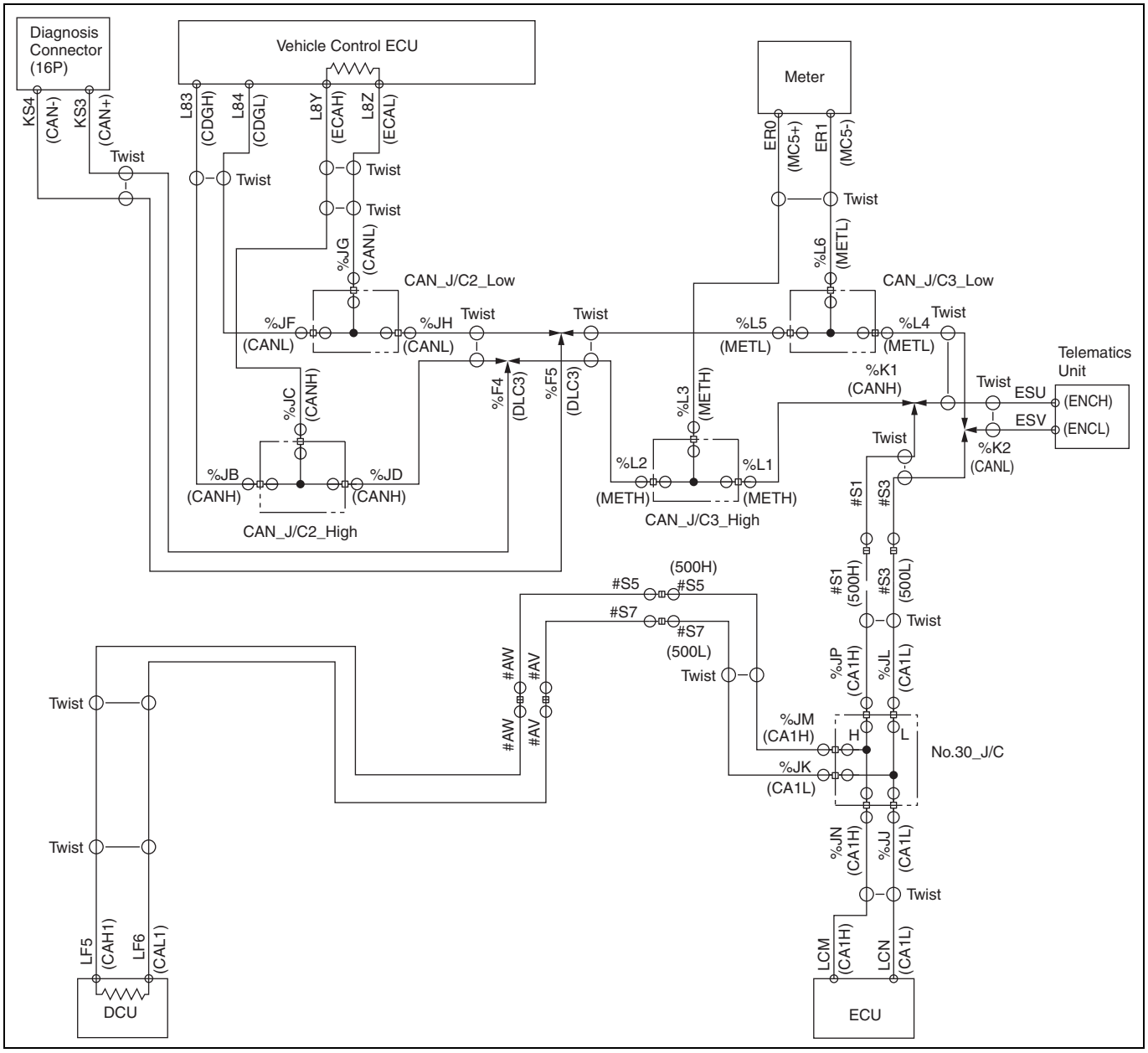


SAPH16F010301501

### 1. Technical description

- –

**<Description of malfunction>**

- CAN communication with the vehicle control ECU has blacked out.

### 2. DTC set condition

(1) DTC detection condition

- Starter switch ON.
- Engine ECU power supply voltage is in the range of 11 V to 16 V.

(2) Judgment criteria

- No CAN data is received from the vehicle control ECU for at least 3 seconds.

**3. Reset condition**

- Immediately after normal operation is restored.

**4. Indication, warning or system control regulation when the DTC is set.**

- MIL: OFF
- SVS light: OFF
- Idling stop system is not available.
- Cruise control function is not available.
- Auxiliary brake function is not available.

**5. Symptoms on the vehicle when the DTC is set**

**<Symptoms on the vehicle due to backup control (fail safe function)>**

- Idling stop system does not work.
- Cruise control does not work.
- Auxiliary brake does not work.

**<Symptoms on the vehicle due to malfunction>**

- –

**6. Pre-inspection work**

- Check that the battery voltage is in the normal range.

**7. After-inspection work**

- Clear all past DTCs.
- Check that no DTC is stored after test drive.

**8. Estimated failure factors**

1. CAN circuit failure (vehicle CAN)
2. Vehicle control ECU failure
3. Harness disconnection or short-circuit

## INSPECTION PROCEDURE: U110A

Refer to the "DIAGNOSIS CAN COMMUNICATION LINE" in the chapter "CAN COMMUNICATION".

**Hino Motors Sales U.S.A., Inc.**
**41180 Bridge Street, Novi, MI 48375**
**Telephone: (248) 699-9300**
**PRINTED IN JAPAN**

---

**Pub.No. S7-UNAE14A 2/3 '16. 10**